TR-DA1509
December 1967

SUBROUTINE DESCRIPTIONS AND LISTINGS FOR THE ORBIT DETERMINATION PROGRAM

VOLUME II

Contract NAS5-9939

Prepared for:

GODDARD SPACE FLIGHT CENTER
GREENBELT, MARYLAND

GPO PRICE $
CFSTI PRICE(S) $
Hard copy (HC)
Microfiche (MF)
ff 653 July 65

SEP 1968

PHILCO Ford

PHILCO-FORD CORPORATION
Space & Re-entry Systems Division
Palo Alto, California

FACILITY FORM 602
N68-33363 (ACCESSION NUMBER)
(THRU)
381 (PAGES)
1 (CODE)
CR-96357 (NASA CR OR TMX OR AD NUMBER)
30 (CATEGORY)

TR-DA1509
December 1967

SUBROUTINE DESCRIPTIONS AND LISTINGS FOR THE ORBIT DETERMINATION PROGRAM

Volume II

Contract Number NAS5-9939

Prepared by

SYSTEM DEVELOPMENT AND MISSION ANALYSIS DEPARTMENT
Space and Re-entry Systems Division
Philco-Ford Corporation
Palo Alto, California

for

GODDARD SPACE FLIGHT CENTER
Greenbelt, Maryland

PHILCO Ford
PHILCO-FORD CORPORATION

Space & Re-entry
Systems Division

TABLE OF CONTENTS

LIST OF TABLES

Subroutine: GHA

Purpose: To determine the Greenwich hour angle of the first point of Aries for a given date and time.

Calling Sequence: CALL GHA(TSEC,D,GHAN,DA,ØMEGA)

Input and Output

I/Ø	Symbolic Name or Location	Program Dimensions	Math Symbol	Data Dimensions or Units	Definition
I	TSEC			Seconds	Fractional part of day from D.
I	D			Days	Whole days from 1950 Jan 0.0 UT.
Ø	GHAN			Degrees	Greenwich hour angle $0 \leq GHA < 360$
I	DA			Degrees	Adjustment due to nutation.
Ø	ØMEGA			deg/sec	Rate of rotation of Earth.

See also DEHA.

Common storages used: None

Subroutines required: None

```
$IBFTC MC13GH  NOLIST,NOREF,DECK,M94,NODD,XR3
CMC13GH  SUBROUTINE GHA                                                 GHA00010
      SUBROUTINE GHA(TSEC,D,GHAN,DA,OMEGA)                              GHA00020
      DOUBLE PRECISION DD                                               GHA00030
      OMEGA = .0041780742/(1.+5.21E-13*D)                               GHA00040
      DD=D                                                              GHA00050
      DD=DD*(.98564735/360.)                                            GHA00060
      DF=IDINT(DD)                                                      GHA00070
      DF=DD-DF                                                          GHA00080
      TEM1 = 100.07554+360.*DF     +2.9015E-13*D*D+OMEGA*TSEC           GHA00090
    1 IF (TEM1) 2,3,3                                                   GHA00100
    2 TEM1 = TEM1+360.                                                  GHA00110
      GO TO 1                                                           GHA00120
    3 IF (TEM1-360.) 5,4,4                                              GHA00130
    4 TEM1 = TEM1-360.                                                  GHA00140
      GO TO 3                                                           GHA00150
    5 GHAN = TEM1+DA*57.2957795                                         GHA00160
      RETURN                                                            GHA00170
      END
```

Subroutine: GØTØR

Purpose: To solve Kepler's equation for incremental eccentric anomaly on a conic section given the incremental mean anomaly (time).

Calling Sequence: CALL GØTØR (K,VM,C,FF,EO)

Input and Output

I/Ø	Symbolic Name or Location	Program Dimensions	Math Symbol	Data Dimensions or Units	Definition
I	K				Orbit type (1) Elliptic (2) Hyperbolic
I	VM		δM	rad	Incremental mean anomaly
I	C	(2)	C_1, C_2		Kepler's equation coefficients
Ø	FF	(4)	F		Trigonometric functions of incremental eccentric anomaly
I/Ø	EO		α		Incremental eccentric anomaly

Common storages used: None

Subroutines required: None

Method

The incremental eccentric anomaly, α, is implicitly expressed as a function of incremental mean anomaly, δM, and conic coefficients, C_1 and C_2, by the transcendental equations

$$\delta M = (\alpha - \sin\alpha) + C_1 \sin\alpha - C_2(\cos\alpha - 1) \qquad \underline{\text{elliptical}}$$

$$\delta M = (\sinh\alpha - \alpha) + C_1 \sinh\alpha + C_2(\cosh\alpha - 1) \qquad \underline{\text{hyperbolic}}$$

The two equations above may be written as a single equation

$$\delta M = f_1(\alpha) + C_1 f_3(\alpha) + C_2 f_4(\alpha)$$

if the following convention is adopted. For the elliptical case, let

$$f_1(\alpha) = \alpha - \sin\alpha$$

$$f_2(\alpha) = 1 - \cos\alpha$$

$$f_3(\alpha) = \sin\alpha$$

$$f_4(\alpha) = \cos\alpha$$

and for the hyperbolic case, let

$$f_1(\alpha) = \sinh\alpha - \alpha$$

$$f_2(\alpha) = \cosh\alpha - \alpha$$

$$f_3(\alpha) = \sinh\alpha$$

$$f_4(\alpha) = \cosh\alpha$$

When $|\alpha| < 1$, numerical accuracy requires that $f_1(\alpha)$ and $f_2(\alpha)$ be computed by truncated series expansions. Otherwise, the computer library functions SIN, CØS, EXP are used in the computation.

The slope of the function

$$F(\alpha) = f_1(\alpha) + C_1 f_3(\alpha) + C_2 f_4(\alpha)$$

at α is seen to be

$$F'(\alpha) = f_2(\alpha) + C_1 f_4(\alpha) + C_2 f_3(\alpha)$$

$F(\alpha)$ is a monotonically increasing function of α so that any solution of the equation $F(\alpha) = \delta M$ is obviously unique. Newton's method of iteration is used. That is, letting α_n be the nth estimate of α, the (n+1)st estimate is calculated from

$$\alpha_{n+1} = \alpha_n + \frac{\delta M - F(\alpha_n)}{F'(\alpha_n)}$$

The iteration is halted and α is said to be α_n when

$$\left| \frac{\alpha_{n+1} - \alpha_n}{\alpha_{n+1} + \alpha_n} \right| < 3. \times 10^{-8}$$

or when n = 20, whichever occurs first. The $f_i(\alpha)$ as well as α are output from GØTØR to avoid their re-computation outside the subroutine.

```
$IBFTC MC13GO  XR3,M94,NODD,LIST
CMC13GO   GOTOR
      SUBROUTINE GOTOR(K,VM,C,FF,E0)
      DIMENSION     C(2),          F(4),          FF(4)
      DIMENSION     A(5),          B(5)
      DATA     A /  .250521083E-7, .275573192E-5, .198412698E-3
     1,             .833333333E-2, .166666667                    /
      DATA     B /  .275573192E-6, .24801587E-4,  .138888889E-2
     1,             .416666667E-1, .5                            /
      DATA     NMAX / 20 /
      E1=E0
      N=0
      GO TO (1,6),K
    1 CONTINUE
C     ELLIPTICAL CASE
      SIG=-1.
    2 IF(ABS(E1).GE.1.) GO TO 5
    3 D2=E1*E1
      F=D2*A
      G=D2*B
      DO 4 I=2,5
      F=D2*(A(I)+SIG*F)
    4 G=D2*(B(I)+SIG*G)
      F(1)=E1*F
      F(2)=G
      F(3)=E1+SIG*F
      F(4)=1.+SIG*G
      GO TO 8
    5 F(3)=SIN(E1)
      F(4)=COS(E1)
      F(1)=E1-F(3)
      F(2)=1.-F(4)
      GO TO 8
    6 CONTINUE
C     HYPERBOLIC CASE
      SIG=1.
    7 E3=ABS(E1)
      IF(E3.LT.1.) GO TO 3
      EX=.5*EXP(E3)
      OX=.25/EX
      F(3)=SIGN(EX-OX,E1)
      F(4)=EX+OX
      F(1)=F(3)-E1
      F(2)=F(4)-1.
    8 CM=F(1)+C(1)*F(3)+C(2)*F(2)
      DM=F(2)+C(1)*F(4)+C(2)*F(3)
      DE=(VM-CM)/DM
      AB=ABS(DE)
      IF(AB.GT.1.) DE=DE/AB
      E2=E1+DE
      IF(ABS(DE/(E2+E1)).LE.3.E-8) GO TO 10
      IF(N-NMAX) 9,10,10
    9 N=N+1
      E1=E2
      GO TO (2,7),K
   10 CONTINUE
      E0=E1
      DO 11 I=1,4
   11 FF(I)=F(I)
      RETURN
      END
```

Subroutine: GRAVD

Purpose: To compute the acceleration due to a central body's gravitational attraction. The gravitational potential may include any combination of inverse-square attraction, zonal harmonics, and tesseral harmonics. (See also GRAVDP).

Calling Sequence: CALL GRAVD(A,U,NZ,NT,ZH,TH,RC,**TB2C**,GC,IG)

Input and Output

I/Ø	Symbolic Name or Location	Program Dimensions	Math Symbol	Data Dimensions or Units	Definition
I	A	d	a	km	Central body equatorial radius
I	U	d	μ	km^3/sec^2	C.B. gravitational constant
I	NZ,NT		N, N_m		Harmonic summation limits
I	ZH	d(NZ-1)	J_{no}		Zonal harmonic coefficients
I	TH	$d(N_m^2+N_m-2)$	J_{nm}, λ_{nm}		Tesseral harmonic coefficients
I	RC	d(3)	R	km	Position vector, C-frame
I	**TB2C**	d(3,3)			Transformation, body-fixed to C-frame
IØ	GC	d(3)	G	km/sec^2	Acceleration
I	IG				Model and output option

Common storages used: 4N+50 cells

Subroutines required: DDØT,DVNØRM

```
$IBFTC MC133Q  XR3,M94,NODD,LIST
      SUBROUTINE GRAVD (A,U,NZ,NT,ZH,TH,RC,TB2C,GC,IG)                  GRAV0001
C     COMPUTES GRAVITATIONAL ACCELERATION WITH SPHERICAL HARMONICS      GRAV0002
C                                                                       GRAV0003
      DOUBLE PRECISION  A      , RC(3)      ,TH(1)   ,ZH(1)             GRAV0004
     1 .               ,GC(3) ,TB2C(3,3) ,U                             GRAV0005
     2                 ,DDOT  ,DVNORM     ,DATAN2 ,DCOS ,DSIN ,DSQRT    GRAV0006
C                                                                       GRAV0007
      COMMON             D ,GI ,UVEC ,C ,PN                             GRAV0008
      DOUBLE PRECISION  C(10) ,GI(3)   ,UVEC(3,3)                      GRAV0009
     1                 ,D(9)  ,PN(10)                                 GRAV0010
C                                                                       GRAV0011
      DOUBLE PRECISION  FN(12)                                          GRAV0012
      DATA   FN/ 0.D0, 1.D0, 2.D0, 3.D0, 4.D0, 5.D0                    GRAV0013
     1         , 6.D0, 7.D0, 8.D0, 9.D0,10.D0,11.D0/                   GRAV0014
C                                                                       GRAV0015
C     SET UP UNIT VECTORS AND SPHERICAL COORDINATES                     GRAV0016
    1 D(1)   = DVNORM(RC,UVEC)                                          GRAV0017
      DO 2 I=1,3                                                        GRAV0018
    2 D(I+1) = DDOT  (UVEC,TB2C(1,I))                                   GRAV0019
      D(5)   = DATAN2(D(3),D(2))                                        GRAV0020
      D(3)   = DSIN  (D(5))                                             GRAV0021
      D(2)   = DCOS  (D(5))                                             GRAV0022
      C(1)   = FN(2)                                                    GRAV0023
      C(2)   = DSQRT (FN(2)-D(4)*D(4))                                  GRAV0024
      D(8)   =-D(4)*D(2)                                                GRAV0025
      D(9)   =-D(4)*D(3)                                                GRAV0026
      DO 3 I=1,3                                                        GRAV0027
      UVEC(I,2) = D(8)*TB2C(I,1)+D(9)*TB2C(I,2)+C(2)*TB2C(I,3)          GRAV0028
    3 UVEC(I,3) = D(2)*TB2C(I,2)-D(3)*TB2C(I,1)                         GRAV0029
      D(2)   = A/D(1)                                                   GRAV0030
      D(3)   =-U/D(1)/D(1)                                              GRAV0031
      D(6)   = FN(3)*D(4)                                               GRAV0032
      DO 4 I=1,3                                                        GRAV0033
    4 GI(I)  = 0.D0                                                     GRAV0034
C                                                                       GRAV0035
C     SET OPTION SWITCHES                                               GRAV0036
   10 MT = 1                                                            GRAV0037
      MZ = 1                                                            GRAV0038
      JG = IABS(IG)                                                     GRAV0039
      IF (JG.LE.3) GO TO 13                                             GRAV0040
      JG = JG-2                                                         GRAV0041
   13 IF (JG-1) 14,16,15                                                GRAV0042
   14 GI(1) = D(3)                                                      GRAV0043
      GO TO 50                                                          GRAV0044
   15 MT = NT                                                           GRAV0045
   16 MZ = NZ                                                           GRAV0046
      DO 17 M=1,MT                                                      GRAV0047
   17 C(M+2) = C(2)*C(M+1)                                              GRAV0048
C                                                                       GRAV0049
C     INITIALIZE FOR N-SUMMATION (ZONALS)                               GRAV0050
   20 D(3)  = D(3)*D(2)                                                 GRAV0051
      PN(2) = FN(2)                                                     GRAV0052
      JG = 1                                                            GRAV0053
      DO 49 N=2,MZ                                                      GRAV0054
C                                                                       GRAV0055
C     GENERATE PN(M)                                                    GRAV0056
      D(3)     = D(3)*D(2)                                              GRAV0057
      D(7)     = FN(N+1)+FN(N)                                          GRAV0058
      D(8)     = FN(N+1)*FN(N+2)                                        GRAV0059
      PN(N+1)  = D(7)*PN(N)                                             GRAV0060
      PN(N)    = D(4)*PN(N+1)                                           GRAV0061
      M = N                                                             GRAV0062
      DO 22 I=2,N                                                       GRAV0063
      M = M-1                                                           GRAV0064
      D(9)  = D(8)-FN(M)*FN(M+1)                                        GRAV0065
   22 PN(M) = (D(6)*FN(M+1)*PN(M+1)-C(3)*PN(M+2))/D(9)                  GRAV0066
C                                                                       GRAV0067
C     COMPUTE AND ADD ZONAL TERMS                                       GRAV0068
   30 D(9)  = ZH(N-1)*D(3)                                              GRAV0069
      GI(1) = GI(1)-D(9)*FN(N+2)*PN(1)                                  GRAV0070
      GI(2) = GI(2)+D(9)*C(2)*PN(2)                                     GRAV0071
      IF (N.GT.MT) GO TO 49                                             GRAV0072
C                                                                       GRAV0073
C     COMPUTE AND ADD TESSERAL TERMS                                    GRAV0074
```

```
   40 DO 48 M=1,N                                                    GRAV0075
      D(7)  = FN(M+1)*(D(5)-TH(JG+1))                                GRAV0076
      D(9)  = TH(JG)*D(3)                                            GRAV0077
      D(8)  = D(9)*DCOS(D(7))                                        GRAV0078
      D(9)  = D(9)*DSIN(D(7))                                        GRAV0079
      D(7)  = FN(M+1)*C(M)*PN(M+1)                                   GRAV0080
      GI(1) = GI(1)-D(8)*FN(N+2)*C(M+1)*PN(M+1)                      GRAV0081
      GI(2) = GI(2)+D(8)*(C(M+2)*PN(M+2)-D(4)*D(7))                  GRAV0082
      GI(3) = GI(3)-D(9)*D(7)                                        GRAV0083
   48 JG = JG+2                                                      GRAV0084
   49 CONTINUE                                                       GRAV0085
C                                                                    GRAV0086
C     COMPUTE ACCELERATION                                           GRAV0087
   50 DO 51 I=1,3                                                    GRAV0088
      DO 51 M=1,3                                                    GRAV0089
   51 GC(I) = GC(I)+GI(M)*UVEC(I,M)                                  GRAV0090
C                                                                    GRAV0091
  999 RETURN                                                         GRAV0092
      END
```

Subroutine: GRAVDP

Purpose: To compute the acceleration due to a central body's gravitational attraction, and optionally its gradient and partial derivatives with respect to harmonic coefficients. The potential may include inverse-square attraction, zonal harmonics, and/or tesseral harmonics.

Calling Sequence: CALL GRAVDP(A,U,NZ,NT,ZH,TH,RC,TB2C,GC,IG,RG,GP,IZ,IT)

Input and Output

I/Ø	Symbolic Name or Location	Program Dimensions	Math Symbol	Data Dimensions or Units	Definition
I	A	d	a	km	Central body equatorial radius
I	U	d	μ	km^3/sec^2	C.B. gravitational constant
I	NZ,NT		N, N_m		Harmonic summation limits
I	ZH	d(NZ-1)	J_{no}		Zonal harmonic coefficients
I	TH	$d(N_m^2+N_m-2)$	J_{nm}, λ_{nm}		Tesseral harmonic coefficients
I	RC	d(3)	R	km	Position vector, C-frame
I	TB2C	d(3,3)			Transformation, body-fixed to C-frame
IØ	GC	d(3)	G	km/sec^2	Acceleration
I	IG				Model and output option
IØ	GR	d(3,3)	ΔG	$1/sec^2$	Gradient of the acceleration
Ø	GP	d(3,n)		km/sec^2	Partial derivatives of the acceleration with respect to the harmonic coefficients
I	IZ	(N)			Output options for zonal partial derivatives
I	IT	$(N_m^2+N_m-2)$			Output options for tesseral partial derivatives

Common storages used: 4N+76 cells

Subroutines required: DDØT,DMVTRN,DVNØRM

Usage:

Model control: The model is controlled by the absolute value of IG. The value of |IG| and the terms included in the model are

|IG|	Spherical Term	Zonal Harmonics	Tesseral Harmonics
1	x		
2	x	x	
3	x	x	x
4		x	
5		x	x

Output control: The gravitational acceleration, G, is summed with the input value for output. If IG < 0, the gradient of the gravitational acceleration is summed with GR and output in GR. The vectors IZ, IT control output of the partial derivatives in GP. For each component of IZ,IT which is ≠0, the partial derivative of G with respect to the corresponding component of ZH,TH respectively, is computed. These partials are upper-loaded into the columns of GP. The components of IZ must be 0 or 1.

Harmonic coefficients: The harmonic coefficients are stored in the arrays ZH,TH in the order:

$$ZH(n-1) = J_{no} \quad , \quad n = 2, 3, \ldots, N$$

$$\begin{aligned}
TH(1) &= J_{21} \\
(2) &= \lambda_{21} \\
(3) &= J_{22} \\
(4) &= \lambda_{22} \\
(5) &= J_{31} \\
(6) &= \lambda_{31} \\
(7) &= J_{32} \\
(8) &= \lambda_{32} \\
(9) &= J_{33} \\
(10) &= \lambda_{33} \\
(11) &= J_{41} \\
&\vdots \\
(k) &= J_{N_m N_m} \\
(k+1) &= \lambda_{N_m N_m}
\end{aligned}$$

The J_{nm} are assumed zero for $m \neq 0$, $n > N_m$.

The internal array FN contains double precision integers from 0 to n+2 (FN(n) = n-1). Its dimension data statement must be at least NZ+3. The common arrays C(i), PN(i) are used to store C^{i-1}, $P_n^{(i-1)}$, respectively, and must be dimensioned at least NZ+2. The dimensions compiled in the listed subroutines are adequate for NZ ≤ 8.

Model

The gravitational field is described by the potential function

$$U = -\frac{\mu}{r} + \frac{\mu}{r} \sum_{n=2}^{N} \sum_{m=0}^{M} J_{nm} \left(\frac{a}{r}\right)^{n} P_n^m(S) \cos m(\lambda - \lambda_{nm}) \qquad (1)$$

where (r, φ, λ) are the spherical coordinates of the field point,

$S = \sin \varphi$

$C = \cos \varphi$

$P_n^m(S)$ = associated Legendre function of the first kind, order n, degree m

$= C^m P_n^{(m)}(S)$

$$P_n^{(m)}(S) = \frac{d^m}{dS^m} P_n(S)$$

The first term is called the spherical term, and the remaining terms are the spherical harmonics. Those harmonics with $m = 0$ are the zonal harmonics, and those with $m \neq 0$ are the tesseral harmonics.

The acceleration, G, is obtained by taking the gradient of U,

$G = -\Delta U.$

Introducing the unit vectors

$\underline{r}$ = unit vector along R

$\underline{k}$ = unit vector along $\varphi = \pi/2$

$\underline{\lambda} = \frac{1}{C} \underline{k} \times \underline{r}$

$\underline{\ell} = \underline{r} \times \underline{\lambda}$

and the abbreviations

$$\sum_{n,m} = \sum_{n=2}^{N} \sum_{m=0}^{n}$$

$$C_{nm} = -\frac{\mu}{r^2} J_{nm} \left(\frac{a}{r}\right)^n \cos m(\lambda - \lambda_{nm}) \tag{2}$$

$$S_{nm} = -\frac{\mu}{r^2} J_{nm} \left(\frac{a}{r}\right)^n \sin m(\lambda - \lambda_{nm})$$

we obtain

$$G = G_r \underline{r} + G_\ell \underline{\ell} + G_\lambda \underline{\lambda}$$

$$\begin{aligned} \nabla G = {} & G_{rr} \underline{rr}^T + G_{r\ell} \underline{r\ell}^T + G_{r\lambda} r\lambda^T \\ & + G_{\ell r} \underline{\ell r}^T + G_{\lambda\lambda} \lambda\lambda^T + G_{\ell\lambda} \underline{\ell\lambda}^T \\ & + G_{\lambda r} \underline{\lambda r}^T + G_{\lambda\ell} \underline{\lambda\ell}^T + G_{\lambda\lambda} \underline{\lambda\lambda}^T \end{aligned} \tag{3}$$

where the coefficients G_r, G_{rr}, etc., are computed from the derivatives of the Legendre polynomials, using

$$
\begin{aligned}
G_i &= \sum_{n,m} g_{i,nm} \\
g_{1,nm} &= - C_{nm}(n+1)C^m P_n^{(m)} \\
g_{2,nm} &= C_{nm}(C^{m+1}P_n^{(m+1)} - mSC^{m-1}P_n^{(m)}) \\
g_{3,nm} &= - S_{nm}\, mC^{m-1}P_n^{(m)} \\
g_{4,nm} &= - \frac{1}{r}(n+2)g_{1,nm} \\
g_{5,nm} &= - \frac{1}{r}(n+2)g_{2,nm} \\
g_{6,nm} &= - \frac{1}{r}(n+2)g_{3,nm} \\
g_{7,nm} &= - \frac{1}{r} S_{nm}\, m(C^m P_n^{(m+1)} - (m-1)SC^{m-2}P_n^{(m)}) \\
g_{8,nm} &= \frac{1}{r} C_{nm}(SC^m P_n^{(m+1)} + m(m-1)C^{m-2}P_n^{(m)} + mC^m P_n^{(m)})
\end{aligned}
\tag{4}
$$

If the spherical term is omitted,

$$
\begin{bmatrix} G_r \\ G_\ell \\ G_\lambda \end{bmatrix} = \begin{bmatrix} G_1 \\ G_2 \\ G_3 \end{bmatrix}
\tag{5}
$$

$$
\begin{bmatrix} G_{rr} & G_{r\ell} & G_{r\lambda} \\ G_{\ell r} & G_{\ell\ell} & G_{\ell\lambda} \\ G_{\lambda r} & G_{\lambda\ell} & G_{\lambda\lambda} \end{bmatrix} = \begin{bmatrix} G_4 & G_5 & G_6 \\ G_5 & G_8 - G_4 - \frac{1}{r}G_1 & G_7 \\ G_6 & G_7 & -G_8 + \frac{1}{r}G_1 \end{bmatrix}
$$

and if the spherical term is included, the quantities $(-\mu/r^2,\ 2\mu/r^3,\ -\mu/r^3,\ -\mu/r^3)$ are added to $(G_r,\ G_{rr},\ G_{\ell\ell},\ G_{\lambda\lambda})$.

The partial derivatives of G with respect to the J_{nm}, λ_{nm} are

$$\frac{\partial G}{\partial J_{nm}} = \frac{1}{J_{nm}} (g_{1,nm}\,\underline{r} + g_{2,nm}\,\underline{\ell} + g_{3,nm}\,\underline{\lambda})$$

$$\frac{\partial G}{\partial \lambda_{nm}} = -\,mS_{nm}(n+1)C^m P_n^{(m)}\,\underline{r} + mS_{nm}(C^{m+1}P_n^{(m+1)} - mSC^{m-1}P_n^{(m)})\underline{\ell} \tag{6}$$

$$+mC_{nm}(mC^{m-1}P_n^{(m)})\underline{\lambda}$$

Note that the use of $\underline{\ell}$ rather than $\underline{k}$ is computationally superior since the singularities at $C = 0$ are removed. Indeed, with the equations in this form, we have merely to note that mC^{m-1} and $m(m-1)C^{m-2}$ may be omitted from the summations for $m = 0$ and $m = 0, 1$, respectively.

Method

The required Legendre polynomials are generated using the recursion formulas

$$P_n^{(n)} = (2n-1)P_{n-1}^{(n-1)}$$

$$P_n^{(n-1)} = SP_n^{(n)} \tag{7}$$

$$P_n^{(m-1)} = (2mSP_n^{(m)} - C^2P_n^{(m+1)})/(n(n+1)-m(m-1))$$

with the starting value

$$P_1^{(1)} = 1 \tag{8}$$

For each n, the set $P_n^{(m)}$, m = 0, 1, ... n, is computed and stored in PNM, with

$$PNM(m+1) = P_n^{(m)}$$

For each n, the subroutine first computes the contributions of the zonal harmonics, then the tesseral harmonics, adding the contributions to the G_i. As each $g_{i,nm}$ is computed, the corresponding components of IZ,IT are checked. For those components which are not zero, the corresponding partial derivatives are upper-loaded into the GP-array in the order: (1) all $\partial G/\partial J_{no}$ required; (2) all $\partial G/\partial J_{nm}$, $\partial G/\partial \lambda_{nm}$ in the same order as IT. The components of IZ,IT are discussed under "Usage".

```
$IBFTC MC13GV  XR3,M94,NODD,LIST
      SUBROUTINE GRAVDP (A,U,NZ,NT,ZH,TH,RC,TB2C,GC,IG,GR,GP,IZ,IT)
C     COMPUTES GRAVITATIONAL ACCELERATION WITH SPHERICAL HARMONICS
C     OPTIONALLY COMPUTES GRADIENT OF THE ACCELERATION
C     AND PARTIALS WITH RESPECT TO HARMONIC COEFFICIENTS
C
      DOUBLE PRECISION   A      ,GP(3,1),RC(3)     ,TH(1),ZH(1)
     1                  ,GC(3)  ,GR(3,3),TB2C(3,3),U
     2                  ,DDOT   ,DVNORM ,DATAN2    ,DCOS ,DSIN ,DSQRT
      DIMENSION          IT(1)  ,IZ(1)
C
      COMMON             D ,GI  ,GN  ,UVEC ,C  ,PN
      DOUBLE PRECISION   C(10)  ,GI(8)  ,PN(10) ,UVEC(3,3)
     1                  ,D(9)   ,GN(8)          ,VEC (3,3)
      EQUIVALENCE       (D,VEC)
C
      DOUBLE PRECISION   FN(12)
      DATA   FN/ 0.D0, 1.D0, 2.D0, 3.D0, 4.D0, 5.D0
     1         , 6.D0, 7.D0, 8.D0, 9.D0,10.D0,11.D0/
C
C     SET UP UNIT VECTORS AND SPHERICAL COORDINATES
    1 D(1)   = DVNORM(RC,UVEC)
      DO 2 I=1,3
    2 D(I+1) = DDOT  (UVEC,TB2C(1,I))
      D(5)   = DATAN2(D(3),D(2))
      D(3)   = DSIN  (D(5))
      D(2)   = DCOS  (D(5))
      C(1)   = FN(2)
      C(2)   = DSQRT (FN(2)-D(4)*D(4))
      D(8)   =-D(4)*D(2)
      D(9)   =-D(4)*D(3)
      DO 3 I=1,3
      UVEC(I,2) = D(8)*TB2C(I,1)+D(9)*TB2C(I,2)+C(2)*TB2C(I,3)
    3 UVEC(I,3) = D(2)*TB2C(I,2)-D(3)*TB2C(I,1)
      D(2)   = A/D(1)
      D(3)   =-U/D(1)/D(1)
      D(6)   = FN(3)*D(4)
      DO 4 I=1,8
    4 GI(I)  = 0.D0
C
C     SET OPTION SWITCHES
   10 MT = 1
      MZ = 1
      LZ = 1
      LT = 1
      DO 11 N=2,NZ
   11 LT = LT+IZ(N-1)
      JG = IG
      ASSIGN 35 TO LLA
      ASSIGN 46 TO LLB
      ASSIGN 56 TO LLC
      LN = 3
      IF (JG.GE.0) GO TO 12
      ASSIGN 33 TO LLA
      ASSIGN 44 TO LLB
      ASSIGN 52 TO LLC
      LN = 8
      JG =-JG
   12 IF (JG.LE.3) GO TO 13
      JG = JG-2
   13 IF (JG-1) 14,16,15
   14 GI(1) = D(3)
      GI(4) =-FN(3)*D(3)/D(1)
      GO TO 50
   15 MT = NT
   16 MZ = NZ
      DO 17 M=1,MT
   17 C(M+2) = C(2)*C(M+1)
C
C     INITIALIZE FOR N-SUMMATION (ZONALS)
   20 D(3)  = D(3)*D(2)
      PN(2) = FN(2)
      JG = 1
      DO 49 N=2,MZ
C
```

```
C     GENERATE PN(M)                                                    GRVP0075
      D(3)     = D(3)*D(2)                                              GRVP0076
      D(7)     = FN(N+1)+FN(N)                                          GRVP0077
      D(8)     = FN(N+1)*FN(N+2)                                        GRVP0078
      PN(N+1) = D(7)*PN(N)                                              GRVP0079
      PN(N)    = D(4)*PN(N+1)                                           GRVP0080
      M = N                                                             GRVP0081
      DO 22 I=2,N                                                       GRVP0082
      M = M-1                                                           GRVP0083
      D(9)   = D(8)-FN(M)*FN(M+1)                                       GRVP0084
   22 PN(M) = (D(6)*FN(M+1)*PN(M+1)-C(3)*PN(M+2))/D(9)                  GRVP0085
C                                                                       GRVP0086
C     COMPUTE AND ADD ZONAL TERMS                                       GRVP0087
C     ACCELERATION                                                      GRVP0088
   30 GN(1) =-D(3)*FN(N+2)*PN(1)                                        GRVP0089
      GN(2) = D(3)*C(2)*PN(2)                                           GRVP0090
      GN(3) = 0.D0                                                      GRVP0091
      IF (IZ(N-1).EQ.0) GO TO 32                                        GRVP0092
C     PARTIAL WRT JN0                                                   GRVP0093
      DO 31 I=1,3                                                       GRVP0094
   31 GP(I,LZ) = GN(1)*UVEC(I,1)+GN(2)*UVEC(I,2)                        GRVP0095
      LZ = LZ+1                                                         GRVP0096
   32 GN(1) = ZH(N-1)*GN(1)                                             GRVP0097
      GN(2) = ZH(N-1)*GN(2)                                             GRVP0098
      GO TO LLA, (33,35)                                                GRVP0099
C     GRADIENT                                                          GRVP0100
   33 D(7)  =-FN(N+3)/D(1)                                              GRVP0101
      DO 34 I=1,2                                                       GRVP0102
      GN(I+3) = D(7)*GN(I)                                              GRVP0103
   34 GN(I+5) = 0.D0                                                    GRVP0104
      GN(8)    = ZH(N-1)*D(3)*D(4)*PN(2)/D(1)                           GRVP0105
   35 CONTINUE                                                          GRVP0106
      DO 36 I=1,LN                                                      GRVP0107
   36 GI(I) = GI(I)+GN(I)                                               GRVP0108
      IF (N.GT.MT) GO TO 49                                             GRVP0109
C                                                                       GRVP0110
C     COMPUTE AND ADD TESSERAL TERMS                                    GRVP0111
   40 DO 48 M=1,N                                                       GRVP0112
      D(7)  = FN(M+1)*(D(5)-TH(JG+1))                                   GRVP0113
      GN(4) = D(3)*DCOS(D(7))                                           GRVP0114
      GN(5) = D(3)*DSIN(D(7))                                           GRVP0115
      GN(6) =-FN(N+2)*C(M+1)*PN(M+1)                                    GRVP0116
      GN(8) = FN(M+1)*C(M)*PN(M+1)                                      GRVP0117
      GN(7) = C(M+2)*PN(M+2)-D(4)*GN(8)                                 GRVP0118
      GN(1) = GN(4)*GN(6)                                               GRVP0119
      GN(2) = GN(4)*GN(7)                                               GRVP0120
      GN(3) =-GN(5)*GN(8)                                               GRVP0121
      IF (IT(JG).EQ.0) GO TO 41                                         GRVP0122
C     PARTIAL WRT JNM                                                   GRVP0123
      CALL DMVTRN(UVEC,GN,GP(1,LT),1,1)                                 GRVP0124
      LT = LT+1                                                         GRVP0125
   41 DO 42 I=1,5                                                       GRVP0126
   42 GN(I) = TH(JG)*GN(I)                                              GRVP0127
      IF (IT(JG+1).EQ.0) GO TO 43                                       GRVP0128
C     PARTIAL WRT LNM                                                   GRVP0129
      GN(6) = FN(M+1)*GN(5)*GN(6)                                       GRVP0130
      GN(7) = FN(M+1)*GN(5)*GN(7)                                       GRVP0131
      GN(8) = FN(M+1)*GN(4)*GN(8)                                       GRVP0132
      CALL DMVTRN(UVEC,GN(6),GP(1,LT),1,1)                              GRVP0133
      LT = LT+1                                                         GRVP0134
   43 GO TO LLB, (44,46)                                                GRVP0135
C     GRADIENT                                                          GRVP0136
   44 GN(6) = C(M+1)*PN(M+2)                                            GRVP0137
      GN(8) = FN(M)*C(M-1)*PN(M+1)                                      GRVP0138
      GN(7) = GN(5)*FN(M+1)*(D(4)*GN(8)-GN(6))/D(1)                     GRVP0139
      GN(8) = GN(4)*(D(4)*GN(6)+FN(M+1)*(GN(8)+C(M+1)*PN(M+1)))/D(1)    GRVP0140
      GN(6) =-FN(N+3)/D(1)                                              GRVP0141
      DO 45 I=1,3                                                       GRVP0142
   45 GN(I+3) = GN(6)*GN(I)                                             GRVP0143
   46 DO 47 I=1,LN                                                      GRVP0144
   47 GI(I) = GI(I)+GN(I)                                               GRVP0145
   48 JG = JG+2                                                         GRVP0146
   49 CONTINUE                                                          GRVP0147
C                                                                       GRVP0148
C     COMPUTE COMPONENTS OF GR ALONG UVEC                               GRVP0149
```

```
   50 GO TO LLC, (52,56)                                          GRVP0150
   52 GI(12) = GI(1)/D(1)-GI(8)                                   GRVP0151
      GI(11) = GI(7)                                              GRVP0152
      GI(10) = GI(6)                                              GRVP0153
      GI( 9) = GI(7)                                              GRVP0154
      GI( 8) =-GI(4)-GI(12)                                       GRVP0155
      GI( 7) = GI(5)                                              GRVP0156
C                                                                 GRVP0157
C     COMPUTE GRADIENT                                            GRVP0158
      CALL DMVTRN(UVEC,GI(4),VEC,1,3)                             GRVP0159
      DO 53 I=1,3                                                 GRVP0160
      DO 53 M=1,3                                                 GRVP0161
      DO 53 N=1,3                                                 GRVP0162
   53 GR(M,N) = GR(M,N)+UVEC(M,I)*VEC(N,I)                        GRVP0163
C                                                                 GRVP0164
C     COMPUTE ACCELERATION                                        GRVP0165
   56 DO 57 I=1,3                                                 GRVP0166
      DO 57 M=1,3                                                 GRVP0167
   57 GC(I) = GC(I)+GI(M)*UVEC(I,M)                               GRVP0168
C                                                                 GRVP0169
  999 RETURN                                                      GRVP0170
      END
```

Subroutine: GRDAT

Purpose: Computes four Goddard Range-Range Rate System measurements (x, y, range, doppler).

Calling Sequence: CALL GRDAT

Input and Output

Common storages used: /DATCØM/

Subroutines required: SBDAT

COMMON LOCATIONS

COMMON	LOCATION	NAME	DIMENSION	DESCRIPTION
DATCØM	C(1)	BIAS	d(2)	BIAS(1), Doppler bias freq. (CPS).
	C(3)			BIAS(2), Transponder retransmission ratio.
	C(133)	FTR	d	Doppler transmitter frequency (CPS).
	C(135)	ØMEGA	d	Earth rotation rate (rad/sec).
	C(137)	SPDLT	d	Speed of light (km/sec)
	C(139)	STA	d(5)	STA(1-3),Receiving station position in B-frame (km). STA(4-5),Refraction constants.
	C(159)	TAU	d	Doppler count interval (sec).
	C(161)	TB2CØ	d(18)	TB2CØ(1-9), B-frame to C-frame transform at end of doppler count interval at time of signal reception at receiving station. TB2CØ(10-18), Same as above but at beginning of doppler count interval.
	C(197)	TB2CT	d(18)	B-frame to C-frame transforms at end and beginning of doppler count interval at time of signal transmission.
	C(233)	TT2BØ	d(9)	Unit North, East, Down vectors at station in B-frame.
	C(269)	XV	d(12)	XV(1-6), Spacecraft position and velocity at end of doppler count interval <u>at spacecraft</u> (km, km/sec). XV(7-12), As above but at beginning of doppler count interval.
	C(297)	NALIGN		Should be set to +1 to indicate antenna mount has its principal axis North.
	C(298)	NANG		=1, include angles =2, omit angles
	C(299)	NFRAC		=1, include refraction =2, omit refraction
	C(5)	ØBS	d(64)	Measurements ØBS(1) = x (rad) ØBS(2) = y (rad) ØBS(33) = Range (sec) ØBS(49) = Doppler (counts) See Table 1, in description of CBDAT.

```
$IBFTC MC13DC  M94,NODD,XR3
CMC13DC   GODDARD RANGE AND RANGE-RATE SYSTEM MEASUREMENTS                GRDT0001
      SUBROUTINE GRDAT                                                    GRDT0002
      COMMON  /DATCOM/  BIAS(2),     OBS(64),     FTR,         OMEGA      GRDT0003
     1,                 SPDLT,       STA(10),     TAU,         TB2CO(18)  GRDT0004
     2,                 TB2CT(18),   TT2BO(9),    TT2BT(9),    XV(12)     GRDT0005
     3,                 MLT,         MODE,        MSTA,        MTIM       GRDT0006
     4,                 NALIGN,      NANG,        NFRAC                   GRDT0007
      DOUBLE PRECISION  BIAS,      OBS,       FTR,       OMEGA,     SPDLT GRDT0008
     1,                 STA,       TAU,       TB2CO,     TB2CT,     TT2BO GRDT0009
     2,                 TT2BT,     XV                                     GRDT0010
      MODE=2                                                              GRDT0011
      BIAS(2)=1.                                                          GRDT0012
      CALL SBDAT                                                          GRDT0013
      OBS(33)=OBS(33)/SPDLT                                               GRDT0014
      OBS(49)=2.*TAU*BIAS(1)-OBS(49)                                      GRDT0015
      RETURN                                                              GRDT0016
      END
```

Subroutine: GRDATP

Purpose: Computes four Goddard Range-Range Rate System measurements and their partials (x, y, range, doppler).

Calling Sequence: CALL GRDATP(R2)

Input and Output

I/Ø	Symbolic Name or Location	Program Dimensions	Math Symbol	Data Dimensions or Units	Definition
Ø	R2	d	S^2	km^2	Slant range squared

Common storages used: /DATCØM/

Subroutines required: SBDATP

COMMON LOCATIONS

COMMON	LOCATIONS	NAME	DIMENSION	DESCRIPTION
DATCØM	C(1)	BIAS	d(2)	BIAS(1), Doppler bias freq. (CPS).
	C(3)			BIAS(2), Transponder retransmission ratio.
	C(133)	FTR	d	Doppler transmitter frequency (CPS).
	C(135)	ØMEGA	d	Earth rotation rate (rad/sec).
	C(137)	SPDLT	d	Speed of light (km/sec).
	C(139)	STA	d(5)	STA(1-3), Station position in B-frame (km). STA(4-5), Refraction constants.
	C(159)	TAU	d	Doppler count interval (sec).
	C(161)	TB2CØ	d(18)	TB2CØ(1-9), B-frame to C-frame transform at end of doppler count interval at signal reception. TB2CØ(10-18), Same as above, but at beginning of doppler count interval.
	C(197)	TB2CT	d(18)	Same as TB2CØ, but at time of signal transmission.
	C(233)	TT2BØ	d(9)	Unit North, East, Down vectors at station in B-frame.
	C(269)	XV	d(12)	XV(1-6), Spacecraft position and velocity in C-frame at end of doppler interval at time signal leaves spacecraft. XV(7-12), As above but at beginning of doppler count.
	C(293)	MLT		Speed of light partial option key*.
	C(295)	MSTA		Station location partial option key*.
	C(296)	MTIM		Station clock partial option key*.
	C(297)	NALIGN		Should be set to +1 to indicate antenna mount with principal axis North.
	C(298)	NANG		Angle inclusion option key*.
	C(299)	NFRAC		Refraction correction option key*. *If key = +1, option will be included If key = +2, option will be omitted. If angles are omitted, no angle partials are computed.
	C(5)	ØBS	d(64)	Measurements and partials. See Table 1, description of CBDAT.

```
$IBFTC MC13DG  XR3,M94,NODD,LIST
CMC13DG   GODDARD RANGE AND RANGE-RATE SYSTEM MEASUREMENTS AND PARTIALS GRDP0001
      SUBROUTINE GRDATP(R2OB)                                           GRDP0002
      COMMON  /DATCOM/  BIAS(2),     OBS(64),     FTR,         OMEGA    GRDP0003
     1,                 SPDLT,       STA(10),     TAU,         TB2CO(18) GRDP0004
     2,                 TB2CT(18),   TT2BO(9),    TT2BT(9),    XV(12)   GRDP0005
     3,                 MLT,         MODE,        MSTA,        MTIM     GRDP0006
     4,                 NALIGN,      NANG,        NFRAC                 GRDP0007
      DOUBLE PRECISION  BIAS,      OBS,       FTR,       OMEGA,     RSPLT GRDP0008
     1,                 SPDLT,     STA,       TAU,       TB2CO,     TB2CT GRDP0009
     2,                 TT2BO,     TT2BT,     XV,        R2OB          GRDP0010
      RSPLT=1.D0/SPDLT                                                  GRDP0011
      MODE=2                                                            GRDP0012
      BIAS(2)=1.                                                        GRDP0013
      CALL SBDATP(R2OB)                                                 GRDP0014
C     ADJUST RANGING OBSERVABLE AND PARTIALS                            GRDP0015
C     ADJUST DOPPLER OBSERVABLE AND PARTIALS                            GRDP0016
      DO 1 I=33,45                                                      GRDP0017
      OBS(I+16)=-OBS(I+16)                                              GRDP0018
    1 OBS(I)=OBS(I)*RSPLT                                               GRDP0019
      OBS(40)=1.D0                                                      GRDP0020
      OBS(49)=2.*TAU*BIAS(1)+OBS(49)                                    GRDP0021
      OBS(56)=TAU                                                       GRDP0022
      RETURN                                                            GRDP0023
      END
```

Subroutine: GRTEST

Purpose: To read Goddard Range and Range Rate System raw data tapes, decode the data, convert units and using subroutine PØLYFT, test for outliers and write the edited data in the DCP format on Unit 12.

Calling Sequence: CALL GRTEST(IERR)

Input and Output

I/Ø	Symbolic Name or Location	Program Dimensions	Math Symbol	Data Dimensions or Units	Definition
Ø	IERR				Error flag. Set = 2 by GRTEST if more than 20 stations are accumulated. Set 0 otherwise.

Common storages used: /TRKCØM/,/ØUTCØM/,/TSTCØM/,/DATCØM/,/SUMCØM/

Subroutines required: DATINP, PØLYFT

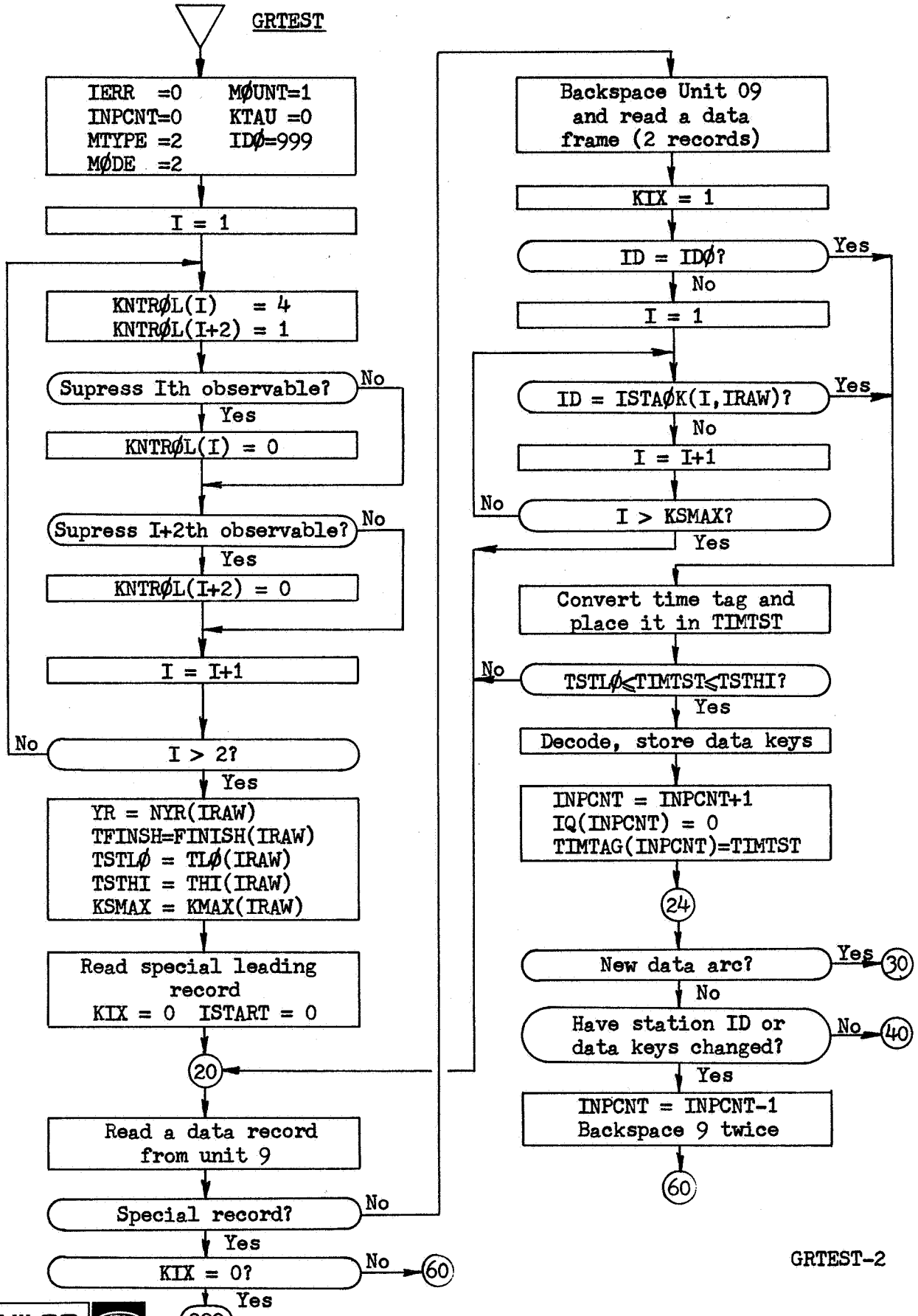
GRTEST
IERR =0 MØUNT=1
INPCNT=0 KTAU =0
MTYPE =2 IDØ=999
MØDE =2
I = 1
KNTRØL(I) = 4
KNTRØL(I+2) = 1
Supress Ith observable?
No
Yes
KNTRØL(I) = 0
Supress I+2th observable?
No
Yes
KNTRØL(I+2) = 0
I = I+1
No
I > 2?
Yes
YR = NYR(IRAW)
TFINSH=FINISH(IRAW)
TSTLØ = TLØ(IRAW)
TSTHI = THI(IRAW)
KSMAX = KMAX(IRAW)
Read special leading record
KIX = 0 ISTART = 0
20
Read a data record from unit 9
Special record?
No
Yes
KIX = 0?
No
60
Yes
999
Backspace Unit 09 and read a data frame (2 records)
KIX = 1
ID = IDØ?
Yes
No
I = 1
ID = ISTAØK(I,IRAW)?
Yes
No
I = I+1
No
I > KSMAX?
Yes
Convert time tag and place it in TIMTST
No
TSTLØ≤TIMTST≤TSTHI?
Yes
Decode, store data keys
INPCNT = INPCNT+1
IQ(INPCNT) = 0
TIMTAG(INPCNT)=TIMTST
24
New data arc?
Yes
30
No
Have station ID or data keys changed?
No
40
Yes
INPCNT = INPCNT-1
Backspace 9 twice
60

GRTEST-2

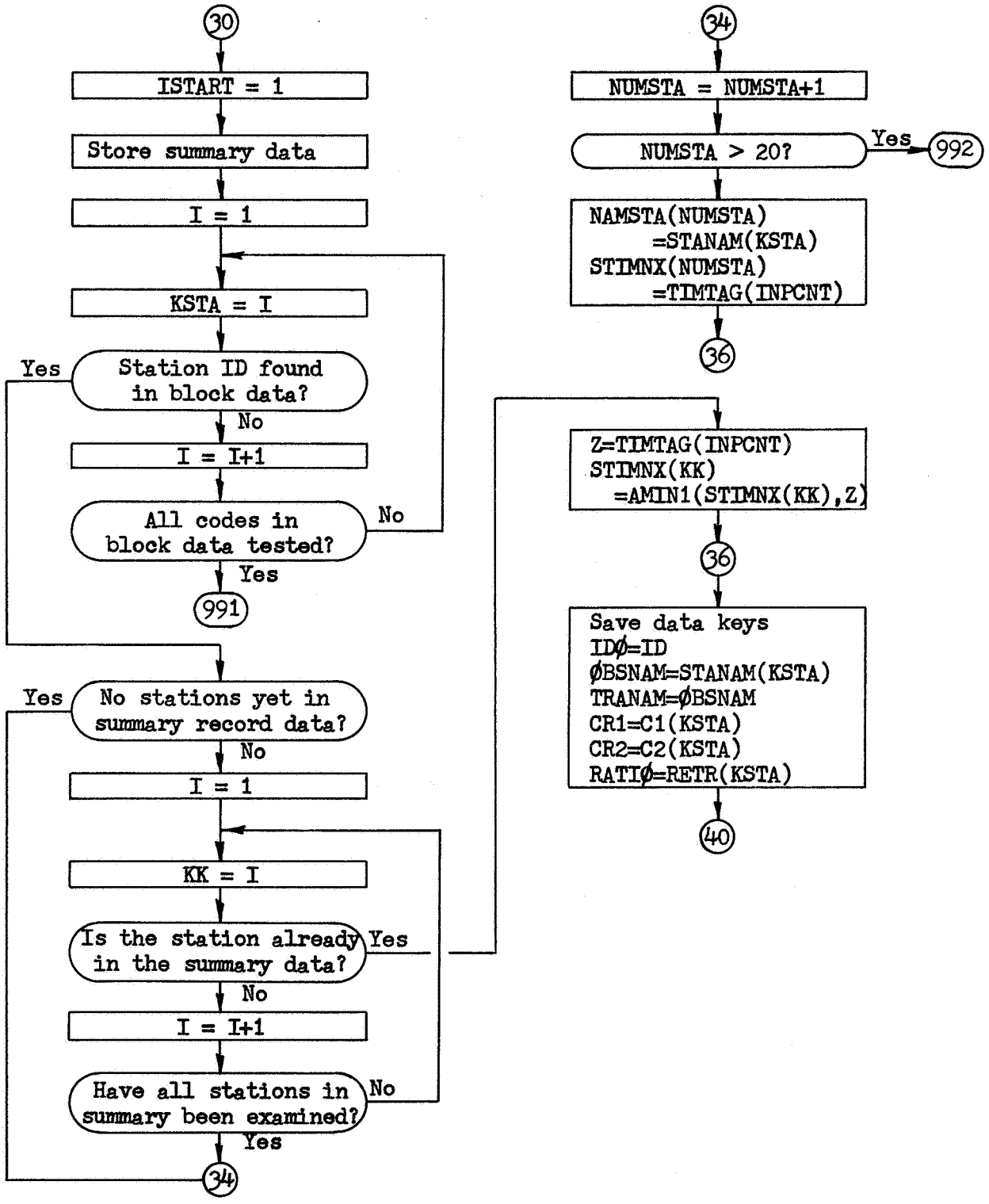
30
ISTART = 1
Store summary data
I = 1
KSTA = I
Station ID found in block data?
Yes
No
I = I+1
All codes in block data tested?
No
Yes
991
No stations yet in summary record data?
Yes
No
I = 1
KK = I
Is the station already in the summary data?
Yes
No
I = I+1
Have all stations in summary been examined?
No
Yes
34
34
NUMSTA = NUMSTA+1
NUMSTA > 20?
Yes
992
NAMSTA(NUMSTA)
=STANAM(KSTA)
STIMNX(NUMSTA)
=TIMTAG(INPCNT)
36
Z=TIMTAG(INPCNT)
STIMNX(KK)
=AMIN1(STIMNX(KK),Z)
36
Save data keys
IDØ=ID
ØBSNAM=STANAM(KSTA)
TRANAM=ØBSNAM
CR1=C1(KSTA)
CR2=C2(KSTA)
RATIØ=RETR(KSTA)
40

GRTEST-3

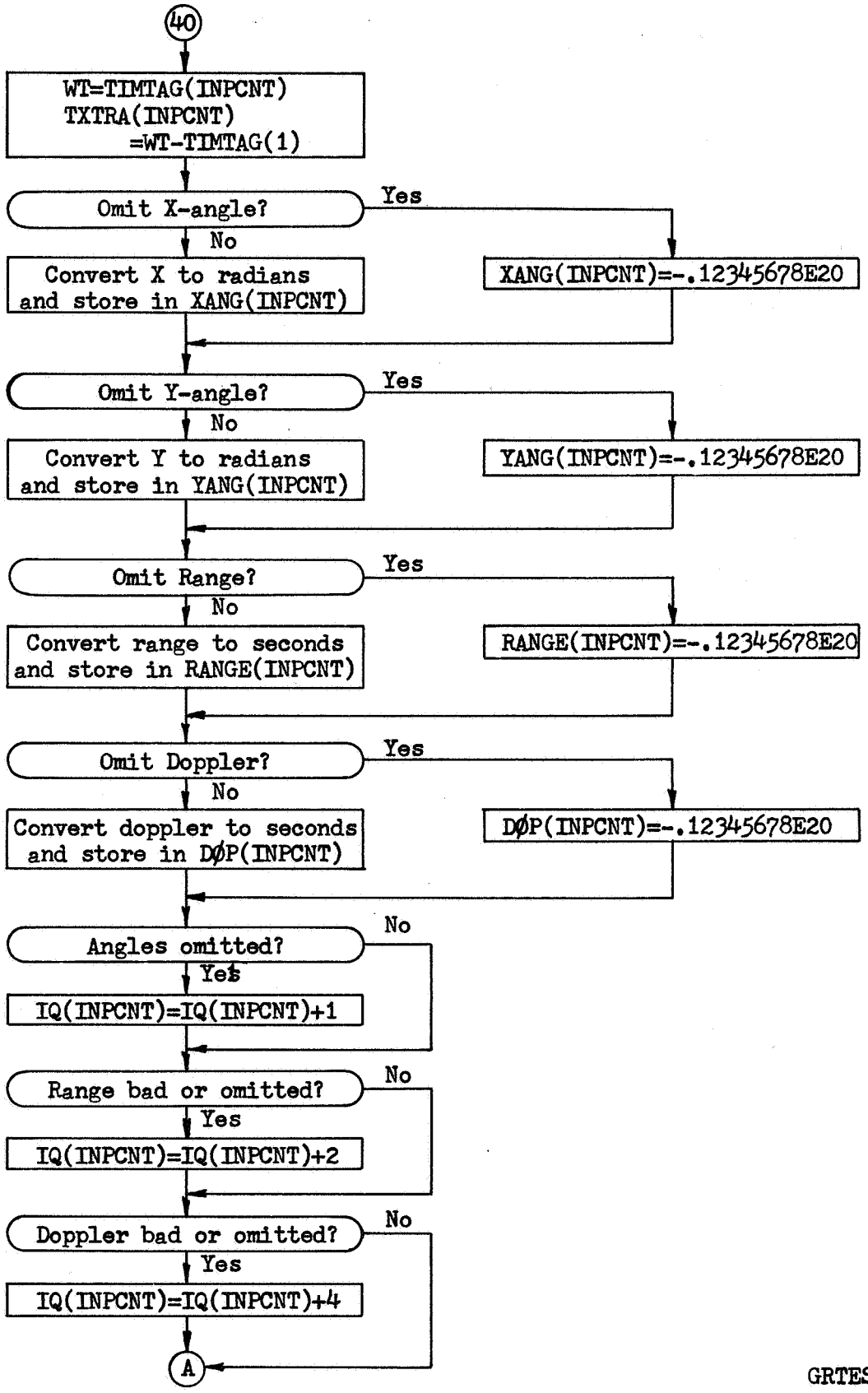
40
WT=TIMTAG(INPCNT)
TXTRA(INPCNT)
=WT-TIMTAG(1)
Omit X-angle?
Yes
No
Convert X to radians and store in XANG(INPCNT)
XANG(INPCNT)=-.12345678E20
Omit Y-angle?
Yes
No
Convert Y to radians and store in YANG(INPCNT)
YANG(INPCNT)=-.12345678E20
Omit Range?
Yes
No
Convert range to seconds and store in RANGE(INPCNT)
RANGE(INPCNT)=-.12345678E20
Omit Doppler?
Yes
No
Convert doppler to seconds and store in DØP(INPCNT)
DØP(INPCNT)=-.12345678E20
Angles omitted?
No
Yes
IQ(INPCNT)=IQ(INPCNT)+1
Range bad or omitted?
No
Yes
IQ(INPCNT)=IQ(INPCNT)+2
Doppler bad or omitted?
No
Yes
IQ(INPCNT)=IQ(INPCNT)+4
A

GRTEST-4

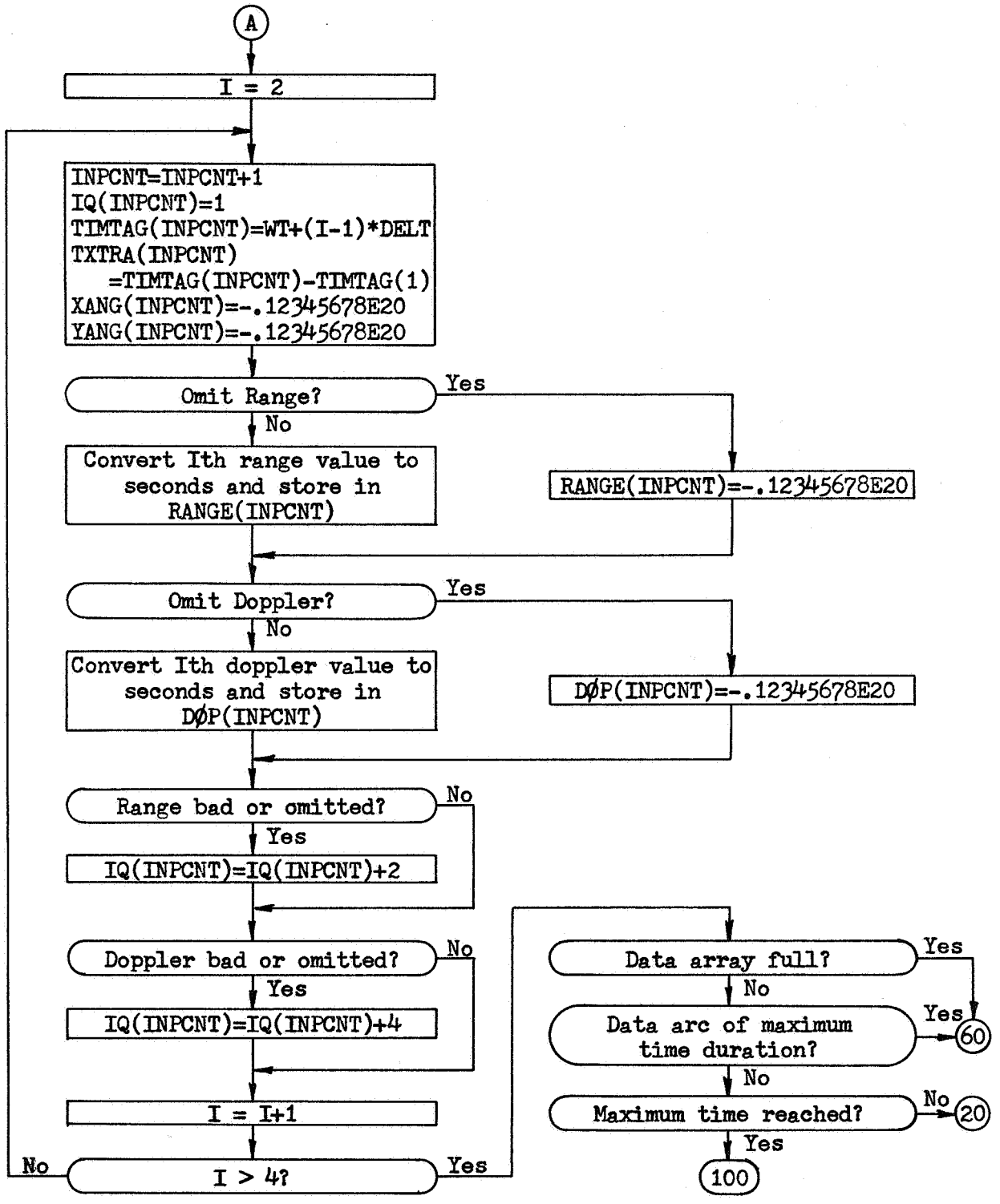
A
I = 2
INPCNT=INPCNT+1
IQ(INPCNT)=1
TIMTAG(INPCNT)=WT+(I-1)*DELT
TXTRA(INPCNT)
=TIMTAG(INPCNT)-TIMTAG(1)
XANG(INPCNT)=-.12345678E20
YANG(INPCNT)=-.12345678E20
Omit Range?
Yes
No
Convert Ith range value to seconds and store in RANGE(INPCNT)
RANGE(INPCNT)=-.12345678E20
Omit Doppler?
Yes
No
Convert Ith doppler value to seconds and store in DØP(INPCNT)
DØP(INPCNT)=-.12345678E20
Range bad or omitted?
No
Yes
IQ(INPCNT)=IQ(INPCNT)+2
Doppler bad or omitted?
No
Yes
IQ(INPCNT)=IQ(INPCNT)+4
I = I+1
No
I > 4?
Yes
Data array full?
Yes
No
Data arc of maximum time duration?
Yes
60
No
Maximum time reached?
No
20
Yes
100

GRTEST-5

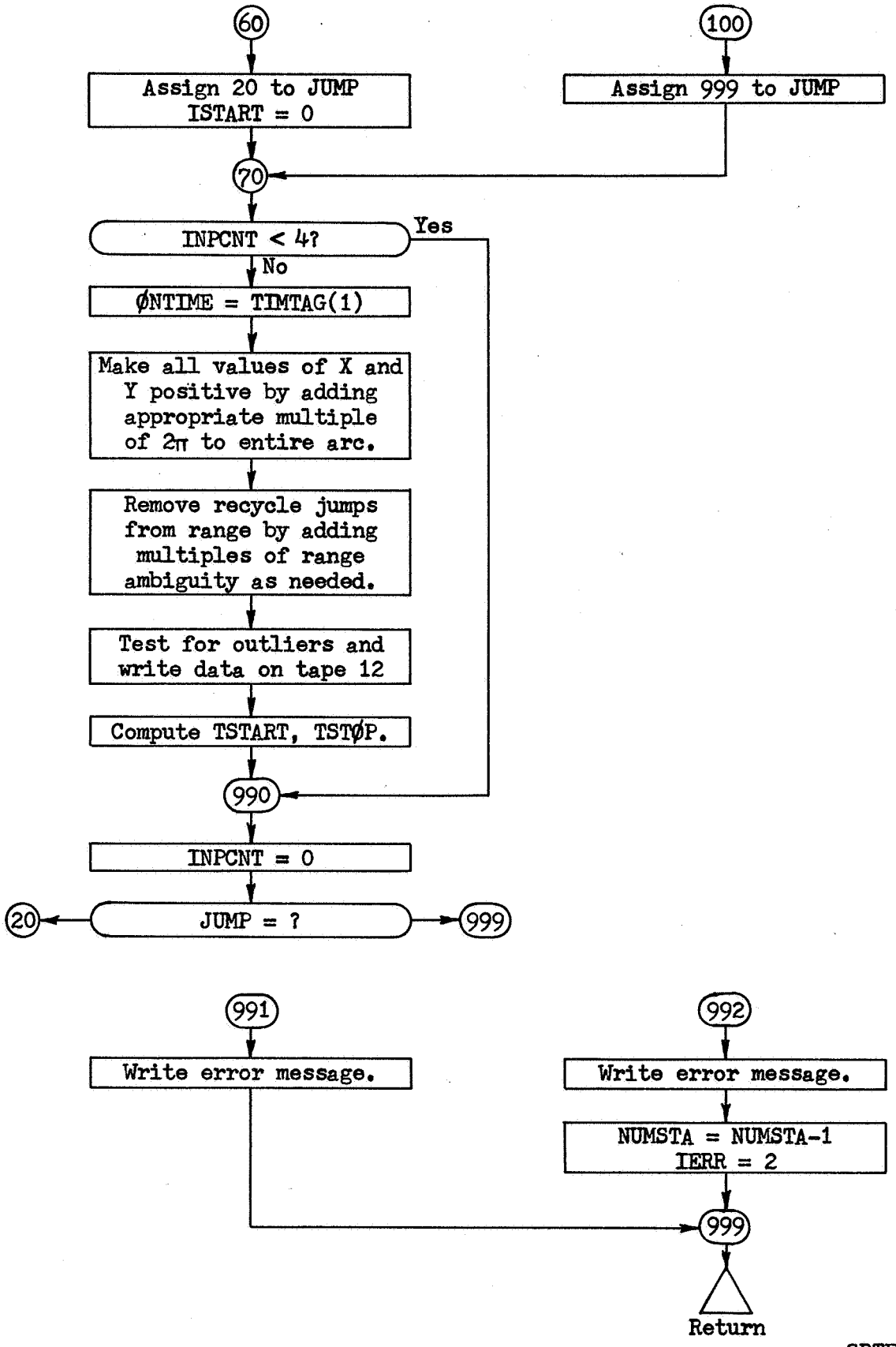
60
Assign 20 to JUMP
ISTART = 0
100
Assign 999 to JUMP
70
INPCNT < 4?
Yes
No
ØNTIME = TIMTAG(1)
Make all values of X and Y positive by adding appropriate multiple of 2π to entire arc.
Remove recycle jumps from range by adding multiples of range ambiguity as needed.
Test for outliers and write data on tape 12
Compute TSTART, TSTØP.
990
INPCNT = 0
20
JUMP = ?
999
991
Write error message.
992
Write error message.
NUMSTA = NUMSTA-1
IERR = 2
999
Return

GRTEST-6

```
$IBFTC MC134X  M94,NODD,XR3
CMC134X   GODDARD RAW DATA PROCESSOR                                    GRTS0001
      SUBROUTINE GRTEST(IERR)                                           GRTS0002
      COMMON  /TRKCOM/CTRK(700)                                         GRTS0003
      DOUBLE PRECISION  FTR(50),  C1(50),   C2(50),   BIAS(50), RETR(50)GRTS0004
      DIMENSION   STANAM(50),   KODSTA(50),   NALIGN(50),   PAIR(50)    GRTS0005
      EQUIVALENCE              (CTRK(1),STANAM),     (CTRK(51),KODSTA)  GRTS0006
     1,  (CTRK(101),NALIGN),   (CTRK(151),FTR),      (CTRK(251),C1)     GRTS0007
     2,  (CTRK(351),C2),       (CTRK(451),BIAS),     (CTRK(551),RETR)   GRTS0008
     3,  (CTRK(651),PAIR)                                               GRTS0009
C                                                                       GRTS0010
      COMMON  /OUTCOM/COUT(40)                                          GRTS0011
      DOUBLE PRECISION  ONTIME,   TFIRST,   TLAST,    TAU,      TRF     GRTS0012
     1,       CR1,      CR2,       DR,       BIASF,    RATIO           GRTS0013
      EQUIVALENCE              (COUT(1),NPAIR),      (COUT(2),NEOT)     GRTS0014
     1,  (COUT(3),OBSNAM),     (COUT(4),TRANAM),     (COUT(5),NRCD)     GRTS0015
     2,  (COUT(6),NPTBLK),     (COUT(7),KONT),       (COUT(8),MTYPE)    GRTS0016
     3,  (COUT(9),MOUNT),      (COUT(10),MODE),      (COUT(11),DELT)    GRTS0017
     4,  (COUT(12),KTAU),      (COUT(13),ONTIME),    (COUT(15),TFIRST)  GRTS0018
     5,  (COUT(17),TLAST),     (COUT(19),TAU),       (COUT(21),TRF)     GRTS0019
     6,  (COUT(23),CR1),       (COUT(25),CR2),       (COUT(27),DR)      GRTS0020
     7,  (COUT(29),BIASF),     (COUT(31),RATIO),     (COUT(33),NB1)     GRTS0021
     8,  (COUT(34),NB2),       (COUT(35),NB3),       (COUT(36),NB4)     GRTS0022
C                                                                       GRTS0023
      COMMON  /TSTCOM/CTEST(400)                                        GRTS0024
      DOUBLE PRECISION  FINISH(10),    TLO(10),       THI(10)           GRTS0025
      DIMENSION   NYR(10),      NPTS(10),     NSTEP(10),    NDEG(10)    GRTS0026
     1,           CSD(4,10),    KNTROL(4),    IFOMIT(4,10), KMAX(10)    GRTS0027
     2,           ISTAOK(20,10)                                         GRTS0028
      EQUIVALENCE              (CTEST(1),NYR),       (CTEST(11),NPTS)   GRTS0029
     1,  (CTEST(21),NSTEP),    (CTEST(31),NDEG),     (CTEST(41),CSD)    GRTS0030
     2,  (CTEST(81),IRAW),     (CTEST(82),KNTROL),   (CTEST(87),FINISH) GRTS0031
     3,  (CTEST(107),IFOMIT),  (CTEST(147),KMAX),    (CTEST(157),ISTAOK)GRTS0032
     4,  (CTEST(357),TLO),     (CTEST(377),THI)                         GRTS0033
C                                                                       GRTS0034
      COMMON  /DATCOM/CDAT(2400)                                        GRTS0035
      DOUBLE PRECISION TIMTAG(300)                                      GRTS0036
      DIMENSION   TXTRA(300),   IQ(300),      XANG(300),    YANG(300)   GRTS0037
     1,           RANGE(300),   DOP(300),     RDAT(300,4)               GRTS0038
      EQUIVALENCE              (CDAT(1),TIMTAG),     (CDAT(601),TXTRA)  GRTS0039
     1,  (CDAT(901),IQ),       (CDAT(1201),XANG),    (CDAT(1501),YANG)  GRTS0040
     2,  (CDAT(1801),RANGE),   (CDAT(2101),DOP),     (XANG,RDAT)        GRTS0041
C                                                                       GRTS0042
      COMMON  /SUMCOM/SUMARY(56)                                        GRTS0043
      DOUBLE PRECISION TSTART,TSTOP                                     GRTS0044
      DIMENSION   HEADER(11),   STIMNX(20)                              GRTS0045
      REAL NAMSTA(20)                                                   GRTS0046
      EQUIVALENCE              (SUMARY(1),HEADER),   (SUMARY(12),NUMSTA)GRTS0047
     1,  (SUMARY(13),NAMSTA),  (SUMARY(33),TSTART),  (SUMARY(35),TSTOP) GRTS0048
     2,  (SUMARY(37),STIMNX)                                            GRTS0049
C                                                                       GRTS0050
      DOUBLE PRECISION  TFINSH,   TMAX,     TIMTST,   TSTLO,    TSTHI   GRTS0051
      DIMENSION  QR(4),    QRD(4),    R(4),     RD(4),     IDC(4),   DI(3)GRTS0052
      DIMENSION IXXHOL(12),     XXHOL(12),    AR(4),        BRD(4)      GRTS0053
     1,           IXX(4),       INTCOD(5),    LXTCOD(5),    NNN(2)      GRTS0054
      EQUIVALENCE  (IXXHOL,XXHOL)                                       GRTS0055
      DOUBLE PRECISION  XCOUNT(5,2),   XFTR(4),       XBIAS(2),      WT GRTS0056
      DIMENSION         XDEL(3),       XSAMP(5)                         GRTS0057
      LOGICAL HYBRID                                                    GRTS0058
C                                                                       GRTS0059
  602 FORMAT(A2)                                                        GRTS0060
  605 FORMAT(F5.2,A1,F8.2,A1,F7.1,1X,F3.0,3F2.0,A1,F8.2,A1,F7.1/        GRTS0061
     1       F5.2,A1,F8.2,A1,F7.1,1X,I3,I2,2I1,3A1,F8.2,A1,F7.1)        GRTS0062
  901 FORMAT(18H0***  STATION CODE,I3,29H DOES NOT EXIST IN BLOCK DATA/ GRTS0063
     16X,34HPROCESSING OF THIS TAPE ABANDONED./                         GRTS0064
     26X,38HPROGRAM PROCEEDS TO NEXT TAPE, IF ANY.)                     GRTS0065
  902 FORMAT(24H0***  TOO MANY STATIONS./                               GRTS0066
     16X,49HPROGRAM CONTROL PASSES TO TERMINATION OPERATIONS.)          GRTS0067
  903 FORMAT(18H0***  STATION CODE,I3,34H IS NOT IN LIST INTERNAL TO GRTGRTS0068
     1EST/6X,34HPROCESSING OF THIS TAPE ABANDONED./                     GRTS0069
     26X,38HPROGRAM PROCEEDS TO NEXT TAPE, IF ANY.)                     GRTS0070
      DATA XCOUNT/229263.D0,131007.D0,65503.D0,32751.D0,3133956.D0,     GRTS0071
     1 14328.D0,8187.D0,4093.D0,2046.D0,182182.D0/                      GRTS0072
      DATA XFTR/2271.9328D6,2270.9328D6,2270.1328D6,148.26D6/           GRTS0073
      DATA XBIAS/.5D6,.03D6/                                            GRTS0074
```

```
      DATA XDEL/.125,.03125,.00625/                                     GRTS0075
      DATA XSAMP/1.,.5,.25,.125,10./                                    GRTS0076
      DATA EOTIND/2H**/                                                 GRTS0077
C     TO AVOID TRUNCATING GODDARD SYSTEM DATA FRAMES, INPMAX MUST       GRTS0078
C     BE A MULTIPLE OF FOUR                                             GRTS0079
      DATA INPMAX/300/                                                  GRTS0080
      DATA TMAX/.432D5/                                                 GRTS0081
      DATA BLANK/1H /                                                   GRTS0082
      DATA XXHOL/1H0,1H1,1H2,1H3,1H4,1H5,1H6,1H7,1H8,1H9,1H*,1H /       GRTS0083
      DATA INTCOD/26,22,52,27,28/                                       GRTS0084
      DATA LXTCOD/30,31,32,33,34/                                       GRTS0085
      DATA TEST/-.12345678E20/                                          GRTS0086
      IERR=0                                                            GRTS0087
      INPCNT=0                                                          GRTS0088
      MTYPE=2                                                           GRTS0089
      MODE=2                                                            GRTS0090
      MOUNT=1                                                           GRTS0091
      KTAU=0                                                            GRTS0092
      IDO=999                                                           GRTS0093
      IDSO=999                                                          GRTS0094
      DO 1 I=1,2                                                        GRTS0095
      KNTROL(I)=4                                                       GRTS0096
      KNTROL(I+2)=1                                                     GRTS0097
      IF(IFOMIT(I,IRAW).NE.0) KNTROL(I)=0                               GRTS0098
      IF(IFOMIT(I+2,IRAW).NE.0) KNTROL(I+2)=0                           GRTS0099
    1 CONTINUE                                                          GRTS0100
      YR=NYR(IRAW)                                                      GRTS0101
      TFINSH=FINISH(IRAW)                                               GRTS0102
      TSTLO=TLO(IRAW)                                                   GRTS0103
      TSTHI=THI(IRAW)                                                   GRTS0104
      KSMAX=KMAX(IRAW)                                                  GRTS0105
C     READ FIRST RECORD OF DOUBLE ASTERISKS                             GRTS0106
      READ(9,602) ARCIND                                                GRTS0107
      KIX=0                                                             GRTS0108
      ISTART=0                                                          GRTS0109
C     TEST RECORD FOR DOUBLE ASTERISKS                                  GRTS0110
   20 READ(9,602) ARCIND                                                GRTS0111
      IF(ARCIND.NE.EOTIND) GO TO 21                                     GRTS0112
C     IF DOUBLE ASTERISKS IN TWO SUCCESSIVE RECORDS, END OF TAPE        GRTS0113
C     IF JUST ONCE, END OF DATA ARC                                     GRTS0114
      IF(KIX.EQ.0) GO TO 999                                            GRTS0115
      KIX=0                                                             GRTS0116
      GO TO 60                                                          GRTS0117
   21 BACKSPACE 9                                                       GRTS0118
C     READ A DATA FRAME,   TWO RECORDS                                  GRTS0119
      READ(9,605) X,AR(1),R(1),BRD(1),RD(1),DAY,HR,XMIN,SEC,AR(2),R(2), GRTS0120
     1BRD(2),RD(2),Y,AR(3),R(3),BRD(3),RD(3),ISAT,IDS,IXX,AR(4),R(4),   GRTS0121
     2BRD(4),RD(4)                                                      GRTS0122
      KIX=1                                                             GRTS0123
C     DECODE DATA KEYS AND CONVERT TIME TAG                             GRTS0124
C     FIND IF STATION NUMBER IS UNCHANGED                               GRTS0125
      IF(IDS.EQ.IDSO) GO TO 220                                         GRTS0126
C     TEST IF STATION ID VALID                                          GRTS0127
      DO 22 I=1,KSMAX                                                   GRTS0128
      IF(IDS.EQ.ISTAOK(I,IRAW)) GO TO 220                               GRTS0129
   22 CONTINUE                                                          GRTS0130
      GO TO 20                                                          GRTS0131
C     REASSIGN STATION ID CODE FOR BLOCK DATA                           GRTS0132
  220 DO 221 I=1,5                                                      GRTS0133
      INTLOC=I                                                          GRTS0134
      IF(IDS.EQ.INTCOD(I)) GO TO 222                                    GRTS0135
  221 CONTINUE                                                          GRTS0136
      WRITE(6,903) IDS                                                  GRTS0137
      GO TO 999                                                         GRTS0138
  222 ID=LXTCOD(INTLOC)                                                 GRTS0139
C     SET UP HYBRID SWITCH.  NOTICE THAT NEW ID CODES ARE USED FOR THIS GRTS0140
      HYBRID=ID.GE.33                                                   GRTS0141
   23 CONTINUE                                                          GRTS0142
      DI(1)=YR*100.+1.                                                  GRTS0143
      DI(2)=(DAY*100.+HR)*100.+XMIN                                     GRTS0144
      DI(3)=SEC                                                         GRTS0145
      CALL DATINP(DI,TIMTST)                                            GRTS0146
C     TEST TIME TAG FOR VALID RANGE OF TIMES                            GRTS0147
      IF(TIMTST.LT.TSTLO.OR.TIMTST.GT.THI) GO TO 20                     GRTS0148
      IQAN=0                                                            GRTS0149
```

```
C     TEST IF HYBRID SYSTEM                                             GRTS0150
      IF(HYBRID) GO TO 240                                              GRTS0151
C     HERE IF NOT HYBRID                                                GRTS0152
C     SET UP DATA KEYS                                                  GRTS0153
      DO 231 I=1,4                                                      GRTS0154
      QRD(I)=BRD(I)                                                     GRTS0155
  231 QR(I)=AR(I)                                                       GRTS0156
      IDC(1)=IXX(1)                                                     GRTS0157
      IDC(2)=IXX(2)                                                     GRTS0158
      DO 234 I=3,4                                                      GRTS0159
      DO 232 J=1,10                                                     GRTS0160
      K=J-1                                                             GRTS0161
      IF(IXX(I).EQ.IXXHOL(J)) GO TO 233                                 GRTS0162
  232 CONTINUE                                                          GRTS0163
  233 IDC(I)=K                                                          GRTS0164
  234 CONTINUE                                                          GRTS0156
      IDEL=(IDC(1)-1)/3+1                                               GRTS0166
      IF(IDC(2).EQ.7) TIMTST=TIMTST+.125                                GRTS0167
      ISAMP=MOD(IDC(2),4)+1                                             GRTS0168
      IDPC=IDC(3)/3+1                                                   GRTS0169
      IFTR=IDC(3)+1                                                     GRTS0170
      GO TO 299                                                         GRTS0171
C     HERE FOR HYBRID SYSTEM                                            GRTS0172
C                                                                       GRTS0173
  240 IDEL=1                                                            GRTS0174
C     THE ABOVE MAY DEPEND ON THE IXX VALUES                            GRTS0175
C     SET UP DATA KEYS                                                  GRTS0176
      ISAMP=MOD(IXX(2),4)+1                                             GRTS0177
      IF(ISAMP.EQ.4) ISAMP=5                                            GRTS0178
      IDPC=IXX(1)/3+1                                                   GRTS0179
      IFTR=IXX(1)+1                                                     GRTS0180
      IF(ISAMP.NE.5) GO TO 244                                          GRTS0181
C     ADD WHOLE SECONDS TO DOPPLER TIMES                                GRTS0182
      DO 243 I=1,4                                                      GRTS0183
      DO 241 J=1,10                                                     GRTS0184
      K=J-1                                                             GRTS0185
      IF(BRD(I).EQ. XXHOL(J)) GO TO 242                                 GRTS0186
  241 CONTINUE                                                          GRTS0187
      K=0                                                               GRTS0188
  242 RD(I)=RD(I)+FLOAT(K)*1.E6                                         GRTS0189
  243 CONTINUE                                                          GRTS0190
C     SET UP QUALITY INDICATORS                                         GRTS0191
  244 DO 249 I=1,4                                                      GRTS0192
      QR(I)=BLANK                                                       GRTS0193
      QRD(I)=BLANK                                                      GRTS0194
      IF(AR(I).EQ. XXHOL(12)) GO TO 249                                 GRTS0195
      DO 245 J=1,11                                                     GRTS0196
      K=J-1                                                             GRTS0197
      IF(AR(I).EQ. XXHOL(J)) GO TO 246                                  GRTS0198
  245 CONTINUE                                                          GRTS0199
  246 IF(K.EQ.1) GO TO 247                                              GRTS0200
      IF(K.EQ.3) GO TO 248                                              GRTS0201
      IQAN=1                                                            GRTS0202
  247 QRD(I)=XXHOL(11)                                                  GRTS0203
  248 QR(I) =XXHOL(11)                                                  GRTS0204
  249 CONTINUE                                                          GRTS0205
C     SET UP AMBIGUITY COUNT IF POSSIBLE                                GRTS0206
      DO 252 I=3,4                                                      GRTS0207
      NNN(I-2) =0                                                       GRTS0208
      DO 250 J=1,10                                                     GRTS0209
      K=J-1                                                             GRTS0210
      IF(IXX(I).EQ.IXXHOL(J)) GO TO 251                                 GRTS0211
  250 CONTINUE                                                          GRTS0212
      GO TO 252                                                         GRTS0213
  251 NNN(I-2)=K                                                        GRTS0214
  252 CONTINUE                                                          GRTS0215
      DO 253 I=1,4                                                      GRTS0216
  253 R(I)=R(I)+FLOAT(10*NNN(1)+NNN(2))*XDEL(IDEL)                      GRTS0217
  299 INPCNT=INPCNT+1                                                   GRTS0218
      TIMTAG(INPCNT)=TIMTST                                             GRTS0219
      IQ(INPCNT)=0                                                      GRTS0220
      IF(ISTART.EQ.0) GO TO 30                                          GRTS0221
C     IF KEYS CHANGE, A NEW DATA ARC IS FORCED                          GRTS0222
      IF(IDEL.EQ.IDELO.AND.ISAMP.EQ.ISAMPO.AND.IDPC.EQ.IDPCO.AND.IFTR.EQGRTS0223
     1.IFTRO.AND.ID.EQ.IDO) GO TO 40                                    GRTS0224
```

```
      INPCNT=INPCNT-1                                                   GRTS0225
      BACKSPACE 9                                                       GRTS0226
      BACKSPACE 9                                                       GRTS0227
      GO TO 60                                                          GRTS0228
C     NEW DATA ARC                                                      GRTS0229
   30 ISTART=1                                                          GRTS0230
C     SET UP CONSTANTS FOR KEY RECORD                                   GRTS0231
      DELT=XSAMP(ISAMP)                                                 GRTS0232
      TAU=XCOUNT(ISAMP,IDPC)                                            GRTS0233
      TRF=XFTR(IFTR)                                                    GRTS0234
      DR=XDEL(IDEL)                                                     GRTS0235
      BIASF=XBIAS(IDPC)                                                 GRTS0236
C     FIND STATION ID IN BLOCK DATA                                     GRTS0237
      DO 31 I=1,50                                                      GRTS0238
      KSTA=I                                                            GRTS0239
      IF(ID.EQ.KODSTA(I)) GO TO 32                                      GRTS0240
   31 CONTINUE                                                          GRTS0241
      GO TO 991                                                         GRTS0242
   32 IF(NUMSTA.EQ.0) GO TO 34                                          GRTS0243
C     IS STATION NAME ALREADY IN SUMMARY DATA                           GRTS0244
      DO 33 I=1,NUMSTA                                                  GRTS0245
      KK=I                                                              GRTS0246
      IF(NAMSTA(I).EQ.STANAM(KSTA)) GO TO 35                            GRTS0247
   33 CONTINUE                                                          GRTS0248
C     NEW STATION NAME                                                  GRTS0249
   34 NUMSTA=NUMSTA+1                                                   GRTS0250
      IF(NUMSTA.GT.20) GO TO 992                                        GRTS0251
      NAMSTA(NUMSTA)=STANAM(KSTA)                                       GRTS0252
      STIMNX(NUMSTA)=TIMTAG(INPCNT)                                     GRTS0253
      GO TO 36                                                          GRTS0254
C     OLD STATION NAME                                                  GRTS0255
C     UPDATE STATION FIRST ON TIME                                      GRTS0256
   35 Z=TIMTAG(INPCNT)                                                  GRTS0257
      STIMNX(KK)=AMIN1(STIMNX(KK),Z)                                    GRTS0258
   36 IDELO=IDEL                                                        GRTS0259
      ISAMPO=ISAMP                                                      GRTS0260
      IDPCO=IDPC                                                        GRTS0261
      IFTRO=IFTR                                                        GRTS0262
      IDO=ID                                                            GRTS0263
      IDSO=IDS                                                          GRTS0264
      OBSNAM=STANAM(KSTA)                                               GRTS0265
      TRANAM=OBSNAM                                                     GRTS0266
      CR1=C1(KSTA)                                                      GRTS0267
      CR2=C2(KSTA)                                                      GRTS0268
C                                                                       GRTS0269
C     THIS MIGHT BE MADE TO DEPEND ON ISAT                              GRTS0270
C     BLOCK DATA VALUE IS FOR S-BAND = 60/80                            GRTS0271
      RATIO=RETR(KSTA)                                                  GRTS0272
C     THIS IS FOR VHF  =12/13                                           GRTS0273
      IF(IFTR.EQ.4) RATIO=.92307692307692308                            GRTS0274
C                                                                       GRTS0275
   40 CONTINUE                                                          GRTS0276
C     LOAD FOUR ROWS OF DATA ARRAY                                      GRTS0277
      WT=TIMTAG(INPCNT)                                                 GRTS0278
      TXTRA(INPCNT)=TIMTAG(INPCNT)-TIMTAG(1)                            GRTS0279
      XANG(INPCNT)=X*.0174532926                                        GRTS0280
      IF(KNTROL(1).EQ.0) XANG(INPCNT)=TEST                              GRTS0281
      YANG(INPCNT)=Y*.0174532926                                        GRTS0282
      IF(KNTROL(2).EQ.0) YANG(INPCNT)=TEST                              GRTS0283
      RANGE(INPCNT)=R(1)*1.E-6                                          GRTS0284
      IF(KNTROL(3).EQ.0.OR.RANGE(INPCNT).EQ.0.) RANGE(INPCNT)=TEST      GRTS0285
      DOP(INPCNT)=RD(1)*1.E-6                                           GRTS0286
      IF(KNTROL(4).EQ.0.OR.DOP(INPCNT).EQ.0.) DOP(INPCNT)=TEST          GRTS0287
      IF(KNTROL(1).EQ.0.OR.KNTROL(2).EQ.0.OR.IQAN.NE.0)                 GRTS0288
     1 IQ(INPCNT)=IQ(INPCNT)+1                                          GRTS0289
      IF(QR(1).NE.BLANK.OR.KNTROL(3).EQ.0) IQ(INPCNT)=IQ(INPCNT)+2      GRTS0290
      IF(QRD(1).NE.BLANK.OR.KNTROL(4).EQ.0) IQ(INPCNT)=IQ(INPCNT)+4     GRTS0291
      DO 41 I=2,4                                                       GRTS0292
      INPCNT=INPCNT+1                                                   GRTS0293
      IQ(INPCNT)=1                                                      GRTS0294
      TIMTAG(INPCNT)=WT+FLOAT(I-1)*DELT                                 GRTS0295
      TXTRA(INPCNT)=TIMTAG(INPCNT)-TIMTAG(1)                            GRTS0296
      XANG(INPCNT)=TEST                                                 GRTS0297
      YANG(INPCNT)=TEST                                                 GRTS0298
      RANGE(INPCNT)=R(I)*1.E-6                                          GRTS0299
```

```
      IF(KNTROL(3).EQ.0.OR.RANGE(INPCNT).EQ.0.) RANGE(INPCNT)=TEST      GRTS0300
      DOP(INPCNT)=RD(I)*1.E-6                                           GRTS0301
      IF(KNTROL(4).EQ.0.OR.DOP(INPCNT).EQ.0.) DOP(INPCNT)=TEST          GRTS0302
      IF(QR(I).NE.BLANK.OR.KNTROL(3).EQ.0) IQ(INPCNT)=IQ(INPCNT)+2      GRTS0303
   41 IF(QRD(I).NE.BLANK.OR.KNTROL(4).EQ.0) IQ(INPCNT)=IQ(INPCNT)+4     GRTS0304
      IF(INPCNT.EQ.INPMAX) GO TO 60                                     GRTS0305
      IF(TIMTAG(INPCNT)-TIMTAG(1).GE.TMAX) GO TO 60                     GRTS0306
      IF(TIMTAG(INPCNT).GE.TFINSH) GO TO 100                            GRTS0307
      GO TO 20                                                          GRTS0308
   60 ASSIGN 20 TO JUMP                                                 GRTS0309
      ISTART=0                                                          GRTS0310
      GO TO 70                                                          GRTS0311
  100 ASSIGN 999 TO JUMP                                                GRTS0312
   70 IF(INPCNT.LT.4) GO TO 990                                         GRTS0313
      ONTIME=TIMTAG(1)                                                  GRTS0314
C     MAKE ALL ANGLES POSITIVE, BUT RETAIN CONTINUITY                   GRTS0315
      DO 710 I=1,2                                                      GRTS0316
      DO 710 K=1,INPCNT,4                                               GRTS0317
      IF(RDAT(K,I).EQ.TEST) GO TO 710                                   GRTS0318
      IF(RDAT(K,I).GE.0.) GO TO 710                                     GRTS0319
      DO 71 L=1,INPCNT,4                                                GRTS0320
      IF(RDAT(L,I).EQ.TEST) GO TO 71                                    GRTS0321
      RDAT(L,I)=RDAT(L,I)+6.28318531                                    GRTS0322
   71 CONTINUE                                                          GRTS0323
  710 CONTINUE                                                          GRTS0324
C     REMOVE RANGE RECYCLE DISCONTINUITIES                              GRTS0325
      DEL=DR                                                            GRTS0326
      STEP=.5*DEL                                                       GRTS0327
      DO 72 I=1,INPCNT                                                  GRTS0328
      KK=I+1                                                            GRTS0329
      IF(RANGE(I).NE.TEST) GO TO 73                                     GRTS0330
   72 CONTINUE                                                          GRTS0331
      GO TO 79                                                          GRTS0332
   73 IF(KK.GT.INPCNT) GO TO 79                                         GRTS0333
      KHOLD=KK-1                                                        GRTS0334
      DO 78 I=KK,INPCNT                                                 GRTS0335
      IF(RANGE(I).EQ.TEST) GO TO 78                                     GRTS0336
      DIFF=RANGE(I)-RANGE(KHOLD)                                        GRTS0337
      IF(ABS(DIFF).LT.STEP) GO TO 77                                    GRTS0338
      IF(DIFF.LT.0.) GO TO 74                                           GRTS0339
      II=KK                                                             GRTS0340
      LL=KHOLD                                                          GRTS0341
      GO TO 75                                                          GRTS0342
   74 II=I                                                              GRTS0343
      LL=INPCNT                                                         GRTS0344
   75 DO 76 M=II,LL                                                     GRTS0345
      IF(RANGE(M).EQ.TEST) GO TO 76                                     GRTS0346
      RANGE(M)=RANGE(M)+DEL                                             GRTS0347
   76 CONTINUE                                                          GRTS0348
   77 KHOLD=I                                                           GRTS0349
   78 CONTINUE                                                          GRTS0350
   79 CONTINUE                                                          GRTS0351
C     DO POLYNOMIAL FITS, TEST FOR OUTLIERS                             GRTS0352
C     PUT DATA ON TAPE 12                                               GRTS0353
      CALL POLYFT(INPCNT)                                               GRTS0354
      TSTART=DMIN1(TSTART,TIMTAG(1))                                    GRTS0355
      TSTOP=DMAX1(TSTOP,TIMTAG(INPCNT))                                 GRTS0356
  990 INPCNT=0                                                          GRTS0357
      GO TO JUMP,(20,999)                                               GRTS0358
  991 WRITE(6,901) ID                                                   GRTS0359
      GO TO 999                                                         GRTS0360
  992 WRITE(6,902)                                                      GRTS0361
      NUMSTA=NUMSTA-1                                                   GRTS0362
      IERR=2                                                            GRTS0363
  999 RETURN                                                            GRTS0364
      END                                                               GRTS0365
```

Subroutine: GTR2BD

Purpose: To compute the transformation from body-fixed to inertial coordinates.

Calling Sequence: CALL GTR2BD (ICB,DN,KEY)

Input and Output

I/ϕ	Symbolic Name or Location	Program Dimensions	Math Symbol	Data Dimensions or Units	Definition
I	ICB				Central body number.
I	DN	d(4)	$\delta\Psi, \delta\epsilon, \delta\alpha$	rad	Nutations in longitude (1) and obliquity (2) are input. The nutation in right ascension (4) is output.
I	KEY				The transformation T_{C2D} is computed only if ICB = 3,11 or KEY > 0.

Common storages used: // 90 cells, /TRJCØM/

Subroutines required: DEHA,DEQTR,DGTRN,DGTSN,DLUNE,DMVTRN

Usage

Ephemeris (ETIMV) and universal (UTIMV) times must be loaded in TRJCØM before entry. The subroutine computes the corresponding transformation T_{B2C}, from body-fixed to Earth's equator, equinox of 1950.0 coordinates.

If KEY > 0 or ICB = 3 or 11, the transformations T_{C2DO}, to Earth's mean equator of date, T_{C2D} to Earth's true equator of date, and T_{B2D} are also computed.

If ICB = 3 or 11, the array CBØ of TRJCØM is computed by GTR2BD. Otherwise, some components must be loaded prior to entry. The components of CBØ are described for the various central bodies in the Table below. Quantities marked *( ) must be loaded prior to entry.

The coordinate systems and transformations are described in the descriptions of the subroutines DEHA,DEQTR,DLUNE and in Appendix A of Reference 1.

CBØ (6)

Central Body Orientation

Component	Central Body			Definition
	Earth	Moon	Other	
1	ω	ω	$^{*}\omega$	Central body angular velocity.
2	$\delta\Upsilon$		$^{*}\Upsilon_{o}$	Nutation in right ascension. Right ascension of prime meridian at 1950 Jan 0.0 ET
3	Υ		Υ	Right ascension of prime meridian.
4	$\bar{\epsilon}$		$^{*}\epsilon'$	Mean obliquity of date.
5	$\delta\Psi$		$^{*}L$	Nutation in longitude. Longitude of ascending node of Earth's ecliptic on central body's equator.
6	ϵ		$^{*}\bar{\epsilon}_{50}$	True obliquity. Earth's mean obliquity of 1950.0

```
$IBFTC MC1321  XR3,M94,NODD,LIST
      SUBROUTINE GTR2BD (ICB,DN,KEY)                                    TR2B0001
C     COMPUTES CENTRAL BODY ORIENTATION                                 TR2B0002
C                                                                       TR2B0003
      DOUBLE PRECISION   DN(4)                                          TR2B0004
      COMMON            /TRJCOM/CTRJ(246)                               TR2B0005
      DOUBLE PRECISION   CBO(6) ,ETFMS ,UTIMV                           TR2B0006
      EQUIVALENCE    (CTRJ(87),CBO  ),(CTRJ( 5),TC2DO),(CTRJ(41),TB2D ) TR2B0007
     1              ,(CTRJ( 1),ETFMS),(CTRJ(23),TC2D ),(CTRJ(59),TB2C ) TR2B0008
     2              ,(CTRJ( 3),UTIMV)                                   TR2B0009
      COMMON             SAVE(40),T(16),D(9)                            TR2B0010
      DOUBLE PRECISION   D,T                                            TR2B0011
      DIMENSION          MD(5)                                          TR2B0012
      DATA               MD/1,-3,-1,-3,1/                               TR2B0013
C                                                                       TR2B0014
    1 JCB = 1                                                           TR2B0015
      IF (ICB.EQ. 3) GO TO 11                                           TR2B0016
      IF (ICB.EQ.11) GO TO 10                                           TR2B0017
      JCB = 3                                                           TR2B0018
      IF (KEY) 40,40,11                                                 TR2B0019
C     EARTHS EQUATOR EQUINOX OF DATE                                    TR2B0020
   10 JCB = 2                                                           TR2B0022
   11 CALL DEQTR (ETFMS,D)                                              TR2B0022
      CALL DGTSN (TC2DO,0,D(2),D(1),D(4))                               TR2B0023
      T(4) = D(3)                                                       TR2B0024
      T(5) = DN(1)                                                      TR2B0025
      T(6) = D(3)+DN(2)                                                 TR2B0026
      CALL DGTRN  (D,MD,T(4),3)                                         TR2B0027
      CALL DMVTRN (D,TC2DO,TC2D,1,3)                                    TR2B0028
      DN(4) = D(2)                                                      TR2B0029
      GO TO (20,30,40) ,JCB                                             TR2B0030
C     EARTH-FIXED                                                       TR2B0031
   20 CALL DEHA   (UTIMV,DN(4),T(3),T)                                  TR2B0032
      CALL DGTRN  (TB2D,-3,T(3),1)                                      TR2B0033
      DO 21 I=1,6                                                       TR2B0034
   21 CBO(I) = T(I)                                                     TR2B0035
   22 CALL DMVTRN (TC2D,TB2D,TB2C,2,3)                                  TR2B0036
      GO TO 999                                                         TR2B0037
C     MOON-FIXED                                                        TR2B0038
   30 D(1) = T(4)                                                       TR2B0039
      CALL DLUNE  (ETFMS,D(1),DN(2),DN(1),TB2D,CBO)                     TR2B0040
      GO TO 22                                                          TR2B0041
C     PLANET-FIXED                                                      TR2B0042
   40 CBO(3) = CBO(2)+ETFMS*CBO(1)                                      TR2B0043
      CALL DGTRN  (TB2C,MD(2),CBO(3),4)                                 TR2B0044
      CALL DMVTRN (TC2D,TB2C,TB2D,1,3)                                  TR2B0045
  999 RETURN                                                            TR2B0046
      END
```

Subroutine: INITAP

Purpose: To perform initializations for MESERP

Calling Sequence: CALL INITAP

Common storages used: /INPCØM/,/WCØM/,/EXIC/

Subroutines required: DATØUT, EHA, ERRØUT, EXINST, FIFL, FIST, MTRN, NUTAIT, ØRB, RØTEQ, RØVLEY, STEPI, TFRAC, TIMED, TIMES

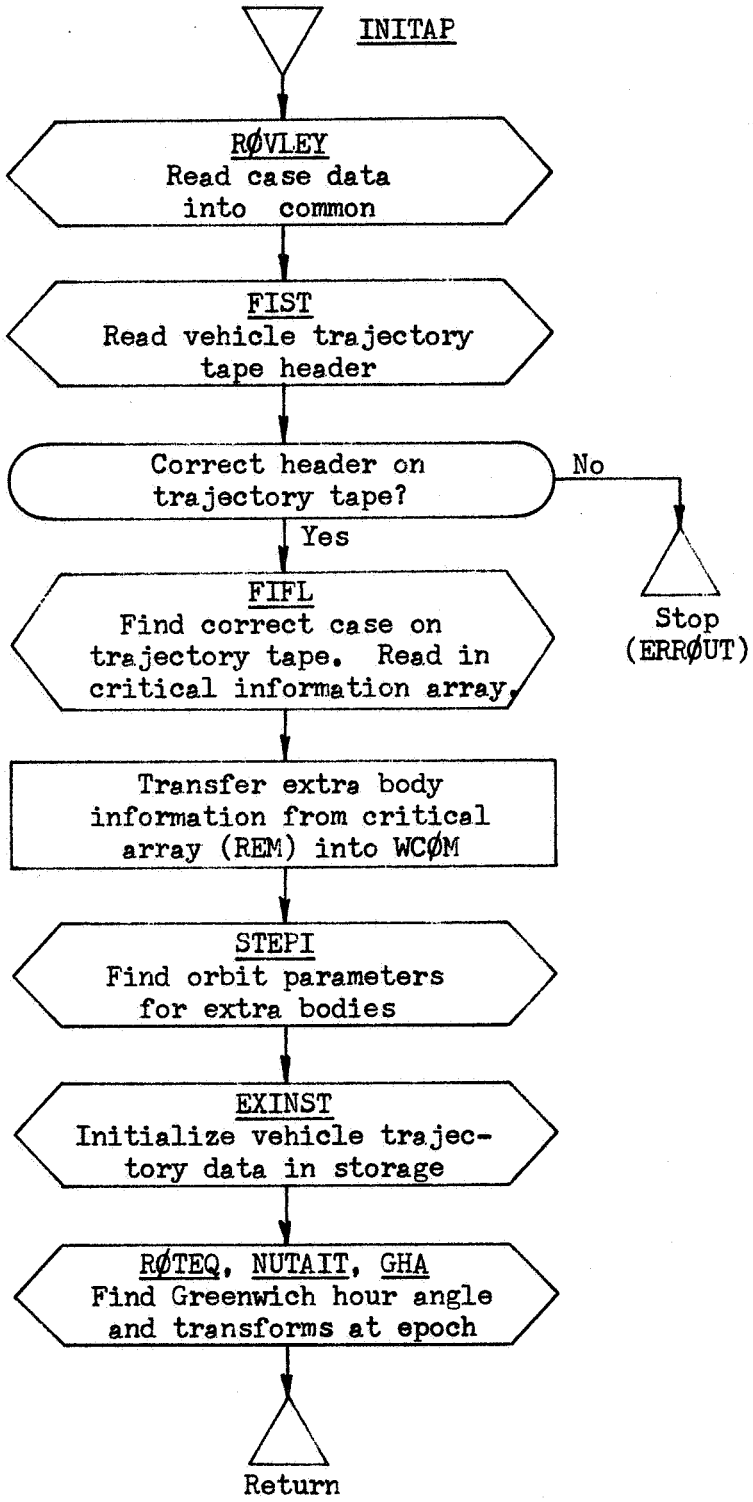
INITAP
RØVLEY
Read case data into common
FIST
Read vehicle trajectory tape header
Correct header on trajectory tape?
No
Yes
Stop (ERRØUT)
FIFL
Find correct case on trajectory tape. Read in critical information array.
Transfer extra body information from critical array (REM) into WCØM
STEPI
Find orbit parameters for extra bodies
EXINST
Initialize vehicle trajectory data in storage
RØTEQ, NUTAIT, GHA
Find Greenwich hour angle and transforms at epoch
Return

```
$IBFTC MC13IT  NOREF,M94,NODD,XR3
CMC13IT   INITAP PERFORMS INITIALIZATIONS FOR MESERP                    INTP0001
      SUBROUTINE INITAP                                                 INTP0002
      DIMENSION    KRX(9,2)                                             INTP0003
      DIMENSION          AN(3,3),       BCD(11)                         INTP0004
     1,   BODC(10,8),    DUM(3,3),      EN(3,3)                         INTP0005
     2,                                 HEAD(24),      ICAS(3)          INTP0006
     3,   IREM(255)                                                     INTP0007
     4,       REM(255),   TI(3)                                         INTP0008
     5,  XIN(6),        XSTOR(9,10),   MSTAR(9,10)                      INTP0009
     6,   NOX(3),        RX(3,3),       VX(3,3),        UM(10)           INTP0010
     7,   SHFC(18),      XSTAR(9,10)                                    INTP0011
      COMMON/INPCOM/C(700)/WCOM/IW(550),CW(1450)/EXIC/W(36),CRX(9,2)    INTP0012
      EQUIVALENCE        (C(6),SPMSD),  (C(7),RSPMSD), (C(11),BODC)    INTP0013
     2,                                                (C(675),HEAD)    INTP0014
     3,            (C(700),IOCAS), (C(21),UM),  (C(673),IKAS)          INTP0015
     4,     (C(5),DTR)                                                 INTP0016
      EQUIVALENCE                (IW(377),ICAS)                        INTP0017
     1,                          (IW(382),NOR),      (IW(4),NOX)       INTP0018
     2,            (IW(489),ITRIG),  (IW(490),KOUNT)                   INTP0019
      EQUIVALENCE  (IW(7),IXT),  (IW(383),ITARG)                        INTP0020
     1,   (CW(1134),XIN),       (CW(1140),TSEC)                        INTP0021
     2,   (CW(1),RX),           (CW(10),VX),        (CW(1160),TI)      INTP0022
     3,   (CW(1163),AN),        (CW(1172),TSECO),   (CW(1179),FLTIM)   INTP0023
     4,                                             (CW(1173),GHAR)    INTP0024
     5,   (CW(1372),SHFC),      (CW(1427),TFO),     (CW(1426),TWO)     INTP0025
      EQUIVALENCE    (KRX,CRX)                                         INTP0026
      EQUIVALENCE  (IREM,REM),    (REM(36),XSTAR,MSTAR)                 INTP0027
     1,                          (REM(162),BCD)                         INTP0028
      DOUBLE PRECISION TWR                                              INTP0029
 701  FORMAT(1H1,11X,28HSTARTING CONDITIONS FOR CASE,I3,1X,12A6)        INTP0030
 702  FORMAT(1H0,1A6,1X,18HIS THE TARGET BODY/13H FLIGHT TIME ,F12.4,   INTP0031
     1 5HDH.MS/10H REF. TIME,2X,F12.4,5HDH MS)                          INTP0032
703   FORMAT(1H ,1A6,1X,8HCENTERED,91X,12HEQUATOR 1950/                 INTP0033
     15H    X,E15.8,5H    Y,E15.8,5H    Z,E15.8,5H   DX,E15.8,          INTP0034
     25H   DY,E15.8,5H   DZ,E15.8)                                      INTP0035
 710  FORMAT(1H0,11X,21HFROM TAPE STORED CASE,I3,1X,12A6)               INTP0036
 711  FORMAT(39H0*WARNING* START TIME LT TAPE ZERO TIME)                INTP0037
      CALL ROVLEY(C,IW,HEAD)                                            INTP0038
      IER=0                                                             INTP0039
      CALL FIST(HEAD,IER,10)                                            INTP0040
      IF(IER.EQ.2) CALL ERROUT(1,27H(22HOUNABLE TO FIND HEADER))        INTP0041
      ICAS(2)=0                                                         INTP0042
      ICAS(3)=1                                                         INTP0043
      CALL FIFL(ICAS,J,REM,IER,10)                                      INTP0044
      IF(IER.LT.0) CALL ERROUT(1,31H(23HOBIN TAPE READ ERR TYPE I3),IER)INTP0045
      IKAS=IKAS+1                                                       INTP0046
      ITRIG=0                                                           INTP0047
      KOUNT=0                                                           INTP0048
      WRITE (6,701) IKAS,(HEAD(I),I=13,24)                              INTP0049
      WRITE(  6 ,710) ICAS(1),BCD                                       INTP0050
      NNN=IREM(35)                                                      INTP0051
      TI(1)=REM(173)                                                    INTP0052
      TI(2)=REM(174)                                                    INTP0053
      DO 111 I=1,9                                                      INTP0054
      DO 111 J=1,10                                                     INTP0055
 111  XSTOR(I,J)=XSTAR(I,J)                                             INTP0056
C TRANSFER EXTRA BODY INFO FROM REM ARRAY INTO WCOM                     INTP0057
      DO 115 I=1,7                                                      INTP0058
 115  IW(I)=IREM(I+3)                                                   INTP0059
      DO 120 I=1,24                                                     INTP0060
 120  CW(I)=REM(I+10)                                                   INTP0061
      IF(IXT.EQ.0) GO TO 123                                            INTP0062
      DO 122 J=1,IXT                                                    INTP0063
      KK=6*J-5                                                          INTP0064
      L=NOX(J)                                                          INTP0065
      CALL STEPI(RX(1,J),VX(1,J),UM(L),SHFC(KK))                        INTP0066
 122  CONTINUE                                                          INTP0067
123   CONTINUE                                                          INTP0068
      IOCAS=IOCAS+1                                                     INTP0069
      FLTIM=(XSTAR(8,NNN)+XSTAR(9,NNN))*SPMSD                           INTP0070
      CALL TIMES(FLTIM,C(101),DUM)                                      INTP0071
      CALL TIMED(C(99),TSECO)                                           INTP0072
      ITARG=MSTAR(7,NNN)                                                INTP0073
      WRITE(  6 ,702) BODC(ITARG,1),C(101),C(99)                        INTP0074
```

```
      TZERO=(XSTAR(8, 1 )+XSTAR(9, 1 ))*SPMSD                           INTP0075
C FIND RELATION OF NEW REFERENCE TIME TO STORED ORBIT                   INTP0076
      I=2                                                               INTP0077
      IF(TSECO-TZERO) 125,140,130                                       INTP0078
 125  WRITE(6,711)                                                      INTP0079
      TSECO=TZERO                                                       INTP0080
      GO TO 140                                                         INTP0081
130     CONTINUE                                                        INTP0082
      T=(XSTAR(8,NNN)+XSTAR(9,NNN))*SPMSD                               INTP0083
      IF(TSECO-T) 140,135,135                                           INTP0084
 135  CONTINUE                                                          INTP0085
      CALL ERROUT(1,36H(31H0START TIME EXCEEDS FLIGHT TIME))            INTP0086
 140  CONTINUE                                                          INTP0087
      NNI=3                                                             INTP0088
      NOR=MSTAR(7,2)                                                    INTP0089
C SAVE INITIAL WHOLE AND FRACTIONAL DAYS                                INTP0090
      TWO=TI(1)                                                         INTP0091
      TFO=TI(2)                                                         INTP0092
C UPDATE TW,TF TO CORRESPOND TO NEW ZERO TIME                           INTP0093
      CALL TFRAC(TI(1),TI(2)+(TSECO-TZERO)*RSPMSD,TI(1),TI(2))          INTP0094
      M=0                                                               INTP0095
      N=18                                                              INTP0096
      TSEC=TSECO                                                        INTP0097
      TWR=TSEC                                                          INTP0098
      CALL EXINST(TWR,M,N,XIN,XIN(4),W,CRX,10,ITRIG,KOUNT)              INTP0099
 148  CONTINUE                                                          INTP0100
      M=1                                                               INTP0101
      N=3                                                               INTP0102
      CALL EXINST(TWR,M,N,XIN,XIN(4),W,CRX,10,ITRIG,KOUNT)              INTP0103
      IF(N.GE.0) GO TO 1485                                             INTP0104
      NOR=KRX(7,2)                                                      INTP0105
      NNI=NNI+2                                                         INTP0106
      GO TO 148                                                         INTP0107
1485    CONTINUE                                                        INTP0108
      CALL DATOUT (TI,TI(2),DUM,DUM(2,1),0)                             INTP0109
      WRITE(6,703) BODC(NOR,1),(XIN(I),I=1,6)                           INTP0110
      CALL ORB ( XIN,XIN(4),UM(NOR),6)                                  INTP0111
      TSEX=TI(2)*SPMSD                                                  INTP0112
      TIME=TI(1)+TI(2)                                                  INTP0113
      CALL ROTEQ(TIME,DUM)                                              INTP0114
      CALL NUTAIT(TIME,WM,CR,DA,EN,EPSIL)                               INTP0115
      CALL MTRN(EN,DUM,AN)                                              INTP0116
      CALL GHA(TSEX,TI(1),GHAR,EN(2,1),WET)                             INTP0117
      GHAR=GHAR*DTR                                                     INTP0118
      RETURN                                                            INTP0119
       END                                                              INTP0120
```

Subroutine: LAYØ

Purpose: To input the station, beacon, and on-board data cards and convert the information to units used internally.

Calling Sequence: CALL LAYØ(S,N,ITEMP)

Input and Output

I/Ø	Symbolic Name or Location	Program Dimensions	Math Symbol	Data Dimensions or Units	Definition
Ø	S	(23)			Card input is read into S(J) where J is the index on the input cards.
I	N				N = 1, read station data N = 2, read beacon data N = 3, read on-board data N = 4, read equation of motion data (this option not used by the TDS).
I	ITEMP	(23)			If N ≠ 2, ITEMP(2) is not used. If N = 2, and ITEMP(2) = 0, beacon measurement data. ITEMP(2) = 1, individual beacon data.

Common storages used: None

Subroutines required: TIMED

```
$IBFTC MC13LO  NOREF,M94,NODD,XR3
CMC13LO   LAYO   SAME AS LAYOVR EXCEPT ERRORS NOT SQUARED                LAY00001
      SUBROUTINE LAYO  (S,N,ITEMP)                                       LAY00002
      DIMENSION S(23),ITEMP(23),IND(4),BUF(4)                            LAY00003
      DATA DTR,OT,STR/ .0174532926,.001, .48481368E-5/                   LAY00004
      KSTOP=0                                                            LAY00005
      IT3=ITEMP(3)                                                       LAY00006
    1 CONTINUE                                                           LAY00007
      READ(5,100) (IND(I),BUF(I),I=1,4)                                  LAY00008
  100 FORMAT(4(I3,E12.8))                                                LAY00009
      IF(IND)3,70,3                                                      LAY00010
    3 DO 60 I=1,4                                                        LAY00011
      J=IND(I)                                                           LAY00012
      IF(J)4,60,5                                                        LAY00013
    4 J=-J                                                               LAY00014
      KSTOP=J                                                            LAY00015
 5    CONTINUE                                                           LAY00016
      B = BUF(I)                                                         LAY00017
      GO TO (10,20,30,59),N                                              LAY00018
 10   GO TO (60,51,52,52,53,52,52,53,59,53,53,53,59,53,53,53,53,53,59,57LAY00019
     1,59,57,59),J                                                       LAY00020
 20   IF(ITEMP(2))60,21 ,22                                              LAY00021
21    IF(J.EQ.11) GO TO 59                                               LAY00022
      IF(J-2) 51,51,53                                                   LAY00023
 22   GO TO (60,52,52,53,52,53,53,53),J                                  LAY00024
 30   GO TO (53,53,53,53,59,59,51,56,59,56,59,56,59,51,52,52,52,52),J    LAY00025
 51   BVD = B                                                            LAY00026
      CALL TIMED(BVD,B)                                                  LAY00027
      GO TO 59                                                           LAY00028
 52   B = DTR*B                                                          LAY00029
C     DEGREES TO RADIANS                                                 LAY00030
      GO TO 59                                                           LAY00031
   56 B=STR*B                                                            LAY00032
C     ARCSECONDS TO RADIANS                                              LAY00033
      GO TO 59                                                           LAY00034
   57 B=B*1.E6                                                           LAY00035
C     MEGACYCLES PER SECOND TO CYCLES PER SECOND                         LAY00036
      GO TO 59                                                           LAY00037
   53 B=OT*B                                                             LAY00038
C     METERS TO KILOMETERS OR MILLIRADIANS TO RADIANS                    LAY00039
   59 S(J)=B                                                             LAY00040
      IF(KSTOP.EQ.J) GO TO 70                                            LAY00041
   60 CONTINUE                                                           LAY00042
      GO TO 1                                                            LAY00043
   70 CONTINUE                                                           LAY00044
      RETURN                                                             LAY00045
      END                                                                LAY00046
```

Subroutine: LØCAT

Purpose: To add N, E, D bias errors to station and beacon locations.

Calling Sequence: CALL LØCAT

Common storages used: /INPCØM/,/WCØM/

Subroutines required: FNØRM, STAT

```
$IBFTC MC13LC  NOREF,M94,NODD,XR3
CMC13LC  LOCAT  ADDS N,E,D,BIAS ERRORS TO STATION,BEACON LOCATIONS      LCAT0001
      SUBROUTINE LOCAT                                                  LCAT0002
      COMMON/INPCOM/C(700)/WCOM/IW(550),CW(1450)                        LCAT0003
      DIMENSION     ISC(12),  IS(11,12),S(23,12), BRDE(2),  BIASL(3,22) LCAT0004
     1,             IBC(10),  IB(3,12), B(8,10),  BRDB(2)               LCAT0005
     2,             BODC(10,8),         CON(3),   TM(3,3),  RT(3)       LCAT0006
     3,             SC(5)                                               LCAT0007
      EQUIVALENCE   (C(11),BODC),       (C(200),S),         (C(476),B)  LCAT0008
     1,             (IW(8),ISC),        (IW(20),IBC),       (IW(180),IS)LCAT0009
     2,             (IW(312),IB),       (IW(347),NBEAC)                 LCAT0010
     3,            (CW(156),BIASL)                                      LCAT0011
      DATA CON(3)/-1./                                                  LCAT0012
      BRDE(1)=BODC(1,3)                                                 LCAT0013
      BRDE(2)=BODC(1,4)                                                 LCAT0014
      DO 19 I=1,12                                                      LCAT0015
      IF(ISC(I)) 20,20,10                                               LCAT0016
10    NSTAT=1                                                           LCAT0017
      K=ISC(I)                                                          LCAT0018
      DO 19 M=6,8                                                       LCAT0019
      IF(IS(M,K)) 11,19,11                                              LCAT0020
11    GO TO (12,15),NSTAT                                               LCAT0021
12    CALL STAT(S(3,K),0.,TM,RT,SC,BRDE)                                LCAT0022
      NSTAT=2                                                           LCAT0023
      CON(1)=FNORM(RT)                                                  LCAT0024
      CON(2)=CON(1)*SC(2)                                               LCAT0025
   15 L=M-3                                                             LCAT0026
      J=M+10                                                            LCAT0027
      N=M-5                                                             LCAT0028
      BIASL(N,K)=S(J,K)/CON(N)                                          LCAT0029
      S(L,K)=S(L,K)+BIASL(N,K)                                          LCAT0030
19    CONTINUE                                                          LCAT0031
20    IF(IBC.EQ.0) GO TO 50                                             LCAT0032
      BRDB(1)=BODC(NBEAC,3)                                             LCAT0033
      BRDB(2)=BODC(NBEAC,4)                                             LCAT0034
      DO 29 I=1,10                                                      LCAT0035
      K=IBC(I)                                                          LCAT0036
      IF(K) 50,50,21                                                    LCAT0037
21    NSTAT=1                                                           LCAT0038
      DO 29 M=1,3                                                       LCAT0039
      IF(IB(M,K)) 22,29,22                                              LCAT0040
22    GO TO (23,25),NSTAT                                               LCAT0041
23    CALL STAT(B(2,K),0.,TM,RT,SC,BRDB)                                LCAT0042
      NSTAT=2                                                           LCAT0043
      CON(1)=FNORM(RT)                                                  LCAT0044
      CON(2)=CON(1)*SC(2)                                               LCAT0045
25    L=M+1                                                             LCAT0046
      J=M+5                                                             LCAT0047
      BIASL(M,K+12)=B(J,K)/CON(M)                                       LCAT0048
      B(L,K)=B(L,K)+BIASL(M,K+12)                                       LCAT0049
29    CONTINUE                                                          LCAT0050
50    CONTINUE                                                          LCAT0051
CCCCC   ANY RELATED WORK FOR ONBOARD                                    LCAT0052
      RETURN                                                            LCAT0053
      END                                                               LCAT0054
```

Subroutine: MEASUR

Purpose: Computes and stores an arc of appropriate type measurements.

Calling Sequence: CALL MEASUR (TSTP,TSTØP,KSTØP,DEL,L,BRAD, KMAXS,KMAXB)

Input and Output

I/ϕ	Symbolic Name or Location	Program Dimensions	Math Symbol	Data Dimensions or Units	Definition
I/ϕ	TSTP			Seconds	Current time from epoch.
I	TSTØP			Seconds	Time to stop making this arc of measurements.
I	KSTØP				Key to indicate measurement type (i.e, station, beacon, etc.).
I	DEL			Seconds	Time step between sequential measurements.
I	L				Station or beacon number.
I	BRAD	(3)		km,km rad/sec	Earth semi-major axis, semi-minor axis, rotation rate.
I	KAMXS				Total number of on-off time pairs in SSTART,SSTØP arrays.
I	KMAXB				Total number of on-off time pairs in BSTART,BSTØP arrays.

Common storages used: /INPCØM/,/WCØM/,/EXIC/,/BUFCØM/

Subroutines required: BMEAS,EXINST,ERROUT,SHIF2,SMEAS ,TFRAC

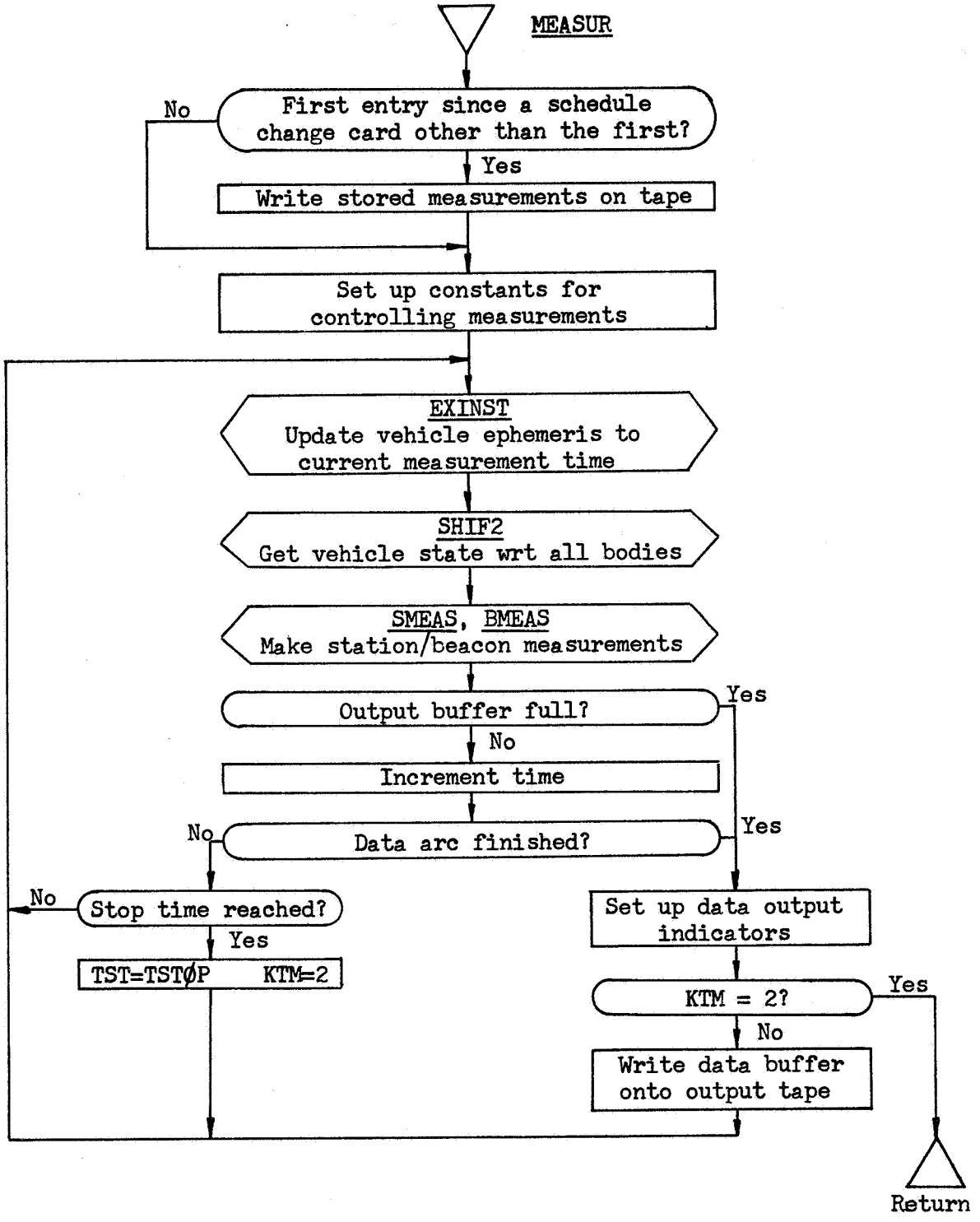
MEASUR
First entry since a schedule change card other than the first?
No
Yes
Write stored measurements on tape
Set up constants for controlling measurements
EXINST
Update vehicle ephemeris to current measurement time
SHIF2
Get vehicle state wrt all bodies
SMEAS, BMEAS
Make station/beacon measurements
Output buffer full?
Yes
No
Increment time
Data arc finished?
No
Yes
Stop time reached?
No
Yes
TST=TSTØP KTM=2
Set up data output indicators
KTM = 2?
Yes
No
Write data buffer onto output tape
Return

```
$IBFTC MC13UR  NOREF,M94,NODD,XR3
CMC13UR  MEASUR  COMPUTES AND STORES MEASUREMENTS EVERY DEL                MSUR0001
      SUBROUTINE MEASUR(TSTP,TSTOP,KSTOP,DEL,L,BRAD,KMAXS,KMAXB)           MSUR0002
      COMMON/INPCOM/C(700)/WCOM/IW(550),CW(1450)/EXIC/W(36),CRX(9,2)       MSUR0003
      COMMON  /BUFCOM/BUFF1(40) ,KEY                                       MSUR0004
      DOUBLE PRECISION  DBUFF(10)                                          MSUR0005
      DOUBLE PRECISION  ONTM,     TFST,     TLST,     TAU,      FTR        MSUR0006
     1,                 C1,       C2,       RAMB,     BIAS,     OMG4       MSUR0007
      EQUIVALENCE  (BUFF1(1),IKY),   (BUFF1(2),KEE),   (BUFF1(3),STANAM)MSUR0008
     1,            (BUFF1(4),STNAM1),(BUFF1(5),NRCD),  (BUFF1(6),NKOUNT)MSUR0009
     2,            (BUFF1(7),KONTIN),(BUFF1(8),MTYPE), (BUFF1(9),NALIGN)MSUR0010
     3,            (BUFF1(10),MODE), (BUFF1(11),FMS),  (BUFF1(12),KTAU) MSUR0011
     4,            (BUFF1(13),DBUFF,ONTM)                                MSUR0012
      EQUIVALENCE  (DBUFF(2),TFST),  (DBUFF(3),TLST),  (DBUFF(4),TAU)   MSUR0013
     1,            (DBUFF(5),FTR),   (DBUFF(6),C1),    (DBUFF(7),C2)    MSUR0014
     2,            (DBUFF(8),RAMB),  (DBUFF(9),BIAS),  (DBUFF(10),OMG4) MSUR0015
      DIMENSION    ABC(2,4), BRDB(3),  BODC(10,8),    TI(2)             MSUR0016
     1,            XIN(6),   XOUT(6,10),              S(23,12)          MSUR0017
     2,       BRAD(3),    IS(11,12),XMES(5, 85), B(91)                   MSUR0018
     3,    IB(36)                                                        MSUR0019
      DIMENSION   KRX(9,2)                                               MSUR0020
      DIMENSION   SSTART(75),   BSTART(75)                               MSUR0021
      EQUIVALENCE  (C(11),BODC),  (C(7),RSPMSD),  (C(200),S)             MSUR0022
     1,            (C(476),B),     (C(6),SPMSD),  (C(115),XTROUT)       MSUR0023
     2,            (CW(1160),TI), (CW(1140),TSEC),    (CW(1134),XIN)    MSUR0024
     3,            (IW(382),NOR), (IW(380),NMAX),     (IW(312),IB)      MSUR0025
     4,            (IB(36),NB),   (IB(35),IBTBIS),    (CW(1426),TWO)    MSUR0026
     5,            (IW(180),IS),   (CW(522),XMES),    (CW(1427),TFO)    MSUR0027
      EQUIVALENCE  (C(116),CFRAC1),  (C(117),CFRAC2)                     MSUR0028
      EQUIVALENCE   (CRX,KRX)                                            MSUR0029
      EQUIVALENCE  (IW(384),IK1),    (IW(386),IK2),    (IW(489),ITRIG)  MSUR0030
     1,            (IW(490),KOUNT),  (CW(222),SSTART), (CW(372),BSTART) MSUR0031
      DIMENSION   TYPE(4)                                                MSUR0032
      DATA TYPE/6HC-BAND,6HGODDRD,6HS-BAND,6H DSIF /                     MSUR0033
      DATA QYES,QNO/3HYES,2HNO/                                          MSUR0034
C  SUBROUTINES REQUIRED   SMEAS,    BMEAS,   TFRAC,    SHIF2,    EXINSTMSUR0035
C                   ERROUT                                               MSUR0036
C     AND EVENTURLLY                                                    MSUR0037
C                        OBOMES,  OBRMES                                 MSUR0038
      DOUBLE PRECISION TWR                                               MSUR0039
      DATA (ABC(1,J),J=1,4)/                                             MSUR0040
     112HSTATION  NO.,                                                   MSUR0041
     212HBEACON   NO.,                                                   MSUR0042
     212HONBRDOPT NO.,                                                   MSUR0043
     412HONBRDRAD NO./                                                   MSUR0044
      DATA IQUAL/0/                                                      MSUR0045
      IF(IABS(KEY).EQ.2) GO TO 1                                         MSUR0046
      ASSIGN 1 TO JUMP                                                   MSUR0047
      GO TO 72                                                           MSUR0048
    1 CONTINUE                                                           MSUR0049
      NRCD=0                                                             MSUR0050
      MODE=2                                                             MSUR0051
      FMS=DEL                                                            MSUR0052
      KTAU=1                                                             MSUR0053
      RAMB=1.D20                                                         MSUR0054
      NMS=0                                                              MSUR0055
      KTM=1                                                              MSUR0056
      KEY=1                                                              MSUR0057
      IF(KSTOP-2) 39,40,43                                               MSUR0058
   39 CONTINUE                                                           MSUR0059
      STANAM=S(1,L)                                                      MSUR0060
      STNAM1=STANAM                                                      MSUR0061
      MTYPE=IS(1,L)                                                      MSUR0062
      NALIGN=IS(10,L)                                                    MSUR0063
      IF(MTYPE.EQ.2) NALIGN=1                                            MSUR0064
      TAU=S(23,L)                                                        MSUR0065
      FTR=S(22,L)                                                        MSUR0066
      C1=CFRAC1                                                          MSUR0067
      C2=CFRAC2                                                          MSUR0068
      BIAS=S(20,L)                                                       MSUR0069
      OMG4=S(21,L)                                                       MSUR0070
      GO TO 43                                                           MSUR0071
40    BRDB(1)=BODC(NB,3)                                                 MSUR0072
      BRDB(2)=BODC(NB,4)                                                 MSUR0073
      BRDB(3)=BODC(NB,7)                                                 MSUR0074
```

```
43    CONTINUE                                                          MSUR0075
      KSORCE=KSTOP                                                      MSUR0076
      NSORCE=L                                                          MSUR0077
   45 CALL TFRAC(TI(1),TI(2)+(TSTP-TSEC)*RSPMSD,TI(1),TI(2))            MSUR0078
      IF(IK1.GE.KMAXS) GO TO 450                                        MSUR0079
      IF(TSTP.GE.SSTART(IK1+1)) ITRIG=1                                 MSUR0080
  450 CONTINUE                                                          MSUR0081
      IF(IK2.GE.KMAXB) GO TO 451                                        MSUR0082
      IF(TSTP.GE.BSTART(IK2+1)) ITRIG=1                                 MSUR0083
  451 CONTINUE                                                          MSUR0084
      TWR=TSTP                                                          MSUR0085
      M=1                                                               MSUR0086
      N=3                                                               MSUR0087
105   CONTINUE                                                          MSUR0088
      CALL EXINST(TWR,M,N,XIN,XIN(4),W,CRX,10,ITRIG,KOUNT)              MSUR0089
      IF(M.LE.0) CALL ERROUT(1,10H(4H0M1=I2),M)                         MSUR0090
      IF(N) 115,110,120                                                 MSUR0091
110   CONTINUE                                                          MSUR0092
      CALL ERROUT(1,28H(23H0ERROR ON BIN TAPE READ))                    MSUR0093
115   CONTINUE                                                          MSUR0094
      N=-N                                                              MSUR0095
      NOR=KRX(7,N)                                                      MSUR0096
      GO TO 105                                                         MSUR0097
120   CONTINUE                                                          MSUR0098
      TSEC=TSTP                                                         MSUR0099
      CALL SHIF2(2,NOR,TI,XIN,1,XOUT)                                   MSUR0100
      NMS=NMS+1                                                         MSUR0101
      GO TO (47,48,49,50),KSTOP                                         MSUR0102
47    CONTINUE                                                          MSUR0103
      CALL SMEAS(S(1,L),BRAD,XOUT,XMES(1,NMS),IS(1,L))                  MSUR0104
      GO TO 60                                                          MSUR0105
48    CALL BMEAS(L      ,BRDB,XOUT(1,NB),XMES(1,NMS))                   MSUR0106
      GO TO 60                                                          MSUR0107
49    CONTINUE                                                          MSUR0108
C     CALL OBOMES FOR ONBOARD OPTICAL MEASUREMENTS                      MSUR0109
      GO TO 60                                                          MSUR0110
50    CONTINUE                                                          MSUR0111
C     CALL OBRMES FOR ONBOARD RADAR   MEASUREMENTS                      MSUR0112
60    CONTINUE                                                          MSUR0113
      IF(NMS.EQ.NMAX) GO TO 70                                          MSUR0114
      GO TO (61,70),KTM                                                 MSUR0115
61    TSTP=TSTP+DEL                                                     MSUR0116
      IF(TSTP-TSTOP) 45,62,63                                           MSUR0117
   62 KTM=2                                                             MSUR0118
      GO TO 45                                                          MSUR0119
   63 KTM=2                                                             MSUR0120
70    CONTINUE                                                          MSUR0121
      IKY=IKY+1                                                         MSUR0122
      KEE=0                                                             MSUR0123
      IF(IKY.EQ.1) KEE=-1                                               MSUR0124
      NRCD=NRCD+1                                                       MSUR0125
      KONTIN=MIN0(NRCD-1,1)                                             MSUR0126
      IF(NRCD.EQ.1) ARCST=XMES(1,1)-TSECO                               MSUR0127
      ONTM=ARCST+(TWO+TFO)*SPMSD                                        MSUR0128
      TFST=XMES(1,1)+ONTM-ARCST                                         MSUR0129
      TLST=XMES(1,NMS)+ONTM-ARCST                                       MSUR0130
      DO 71 I=1,85                                                      MSUR0131
   71 XMES(1,I)=XMES(1,I)-ARCST                                         MSUR0132
      NKOUNT=NMS                                                        MSUR0133
      IF(KTM.EQ.2) GO TO 65                                             MSUR0134
      ASSIGN 640 TO JUMP                                                MSUR0135
   72 WRITE(12) BUFF1                                                   MSUR0136
      WRITE(12) (IQUAL,I=1,85),((XMES(I,J),J=1,85),I=1,5)               MSUR0137
C***  CHECK BINARY OUTPUT                                               MSUR0138
      QOUT=QNO                                                          MSUR0139
      IF(KONTIN.EQ.1) QOUT=QYES                                         MSUR0140
      WRITE(6,601) IKY,STANAM,STNAM1,TYPE(MTYPE),QOUT,TFST              MSUR0141
  601 FORMAT(//24H ***  RECORD PAIR NUMBER,I5//75H RECEIVING STATION   TMSUR0142
     1RANSMITTING STATION   MEASUREMENT TYPE   CONTINUATION/7X,A6,15X,A6MSUR0143
     2,15X,A6,12X,A3//12H DATA BEGINS,D24.16,20H SECONDS FROM 1950.0)   MSUR0144
      TEMP=(TFST -.5364576D9)*RSPMSD                                    MSUR0145
      CALL TFRAC(6209.,TEMP,XO1,XO2)                                    MSUR0146
      CALL DATOUT(XO1,XO2,YO1,YO2,0)                                    MSUR0147
      WRITE(6,602) TLST                                                 MSUR0148
  602 FORMAT(12H0 DATA ENDS ,D24.16,20H SECONDS FROM 1950.0)            MSUR0149
```

```
      TEMP=(TLST -.5364576D9)*RSPMSD                                    MSUR0150
      CALL TFRAC(6209.,TEMP,XO1,XO2)                                    MSUR0151
      CALL DATOUT(XO1,XO2,YO1,YO2,0)                                    MSUR0152
      WRITE(6,606) NKOUNT                                               MSUR0153
  606 FORMAT(12H0TIME POINTS/I7)                                        MSUR0154
      IF(XTROUT.EQ.0.) GO TO 64                                         MSUR0155
      WRITE(6,607) KEE,NRCD,NALIGN,MODE,FMS,KTAU,ONTM, (DBUFF(I),I=4,10)MSUR0156
     1,(IQUAL,(XMES(I,J),I=1,5),J=1,NKOUNT)                             MSUR0157
  607 FORMAT(5H0NEOT,3X,4HNRCD,3X,6HNALIGN,3X,4HMODE,7X,8HMEAS INT,6X   MSUR0158
     1,4HKTAU,11X,6HONTIME,22X,3HTAU/I4,I7,2I8,E19.8,I6,D27.16,D26.16// MSUR0159
     213X,3HFTR,23X,2HC1,24X,2HC2,24X,2HDR/4D26.16//12X,4HBIAS,21X,5HRATMSUR0160
     3IO/2D26.16//3H IQ,11X,4HTIME,15X,5HANG 1,15X,5HANG 2,15X,5HRANGE, MSUR0161
     414X,7HDOPPLER/(I3,5E20.8))                                        MSUR0162
   64 GO TO JUMP,(1,640)                                                MSUR0163
  640 NMS=0                                                             MSUR0164
      GO TO 61                                                          MSUR0165
65    RETURN                                                            MSUR0166
      END                                                               MSUR0167
```

Subroutine: MEAS2X

Purpose: Converts vehicle state from measurement space to Cartesian space, earth-centered equator and equinox of 1950.0. Also computes the gradient of the Cartesian state vector with respect to the measurement space state vector.

Calling Sequence: CALL MEAS2X(XC,PX2M,XM,NRØT,TL2C,RC2L,ØMEGAC,ØMEGA).

Input and Output

I/Ø	Symbolic Name or Location	Program Dimensions	Math Symbol	Data Dimensions or Units	Definition
Ø	XC	d(6)	X_c	km, km/sec	Spacecraft position and velocity in Cartesian space.
Ø	PX2M	d(6,6)	$\frac{\partial X_c}{\partial X_M}$		Gradient of Cartesian state vector with respect to measurement space state vector.
I	XM	d(6)	X_M	km, km/sec,	Spacecraft state in measurement space. (See discussion in subsequent pages.)
I	NRØT	(3)			Defines the axes of rotation of the measurement angles. (See discussion following.)
I	TL2C	d(3,3)			Transformation from coordinates in which measurements are made to C-frame. (See discussion).
I	RC2L	d(3)		km	Origin of measurement coordinate system with respect to C-frame origin in C-frame coordinates.
I	ØMEGAC	d(3)	$\hat{\Omega}$		Unit vector along earth spin axis expressed in C-frame coordinates.
I	OMEGA	d	ω	rad/sec	Earth spin rate, inertial. Set = 0. by calling program (MLESTT) for DSIF(JPL) measurements.

Common storages used: //96 cells.

Subroutines required: DCRØSS,DGTRN,DMVTRN

1. Coordinate Systems

Three coordinate systems are used by the Data Start link of the Orbit Determination Program System. All three are right-handed Cartesian (dextral orthogonal) systems. Two are considered to be inertial systems by the Data Start link; the third is earth-fixed and therefore rotates in inertial space.

The fundamental inertial system used by the ODP system is an earth-centered, dextral orthogonal, equator and equinox of 1950.0 system. This system is always referred to as the C-frame.

The secondary "inertial" system is an earth-centered, dextral orthogonal, equator and equinox of date system. This system is always referred to as the D-frame. Obviously the C-frame and D-frame cannot both be truly inertial systems, and the D-frame is not generally so considered by the ODP system. However, within the Data Start link, the relative motion of the two systems is ignored. The third system is a tracker-centered, dextral orthogonal, earth-fixed, local tangent plane system. The first basis vector lies along the local North vector; the second, along the local East vector; the third, along the local Down vector. This system is always referred to as the L-frame.

Tracking station measurements are always made in the L-frame with one exception: DSIF(JPL) angles are always made in a special coordinate system that is identical to the D-frame except that it is translated (without rotation) so that its center is at the tracker. In this subroutine description only, any reference to the L-frame will mean the true L-frame when any except DSIF measurements are involved and will mean the above described translated D-frame when DSIF measurements are involved; i.e., any reference to the L-frame in this subroutine will mean the coordinate frame in which the measurements are made.

2. State Spaces

The spacecraft state (position and velocity) is expressed and computed in two distinct ways in the Data Start link. The first is a normal Euclidian 3-space whose basis vectors are identical to those of the C-frame. Thus, the state elements in this system are the familiar X, Y, Z, $\dot{X}$, $\dot{Y}$, and $\dot{Z}$ in the C-frame. This system is used by the Data Start link primarily for output and communication with the Differential Correction Program.

The second system, in which most of the actual Data Start link calculations are performed, may be referred to as a measurement space. In this system the spacecraft state is defined by slant range, two angles (e.g., azimuth and elevation), and the time derivatives of these three elements. Since the units are obviously incompatible (kilometers mixed with radians), scaling is employed to avoid numerical difficulties with certain matrix operations. The scaling is of no concern to this subroutine since the input in measurement space is unscaled prior to entry into the subroutine.

3. Extended Description of Input and Output

The previous two sections provide sufficient material so that an extended discussion of input and output is now possible.

3.1 Input

XM, or X_M, is the spacecraft state expressed in measurement space. The actual components depend on the measurement system type as follows:

X_M	MEASUREMENT SYSTEM				Symbol
	C-Band	Goddard	USBS	DSIF	
1	Range, km	Range, km	Range, km	Range, km	ρ
2	Azimuth, rad	X-angle, rad	X-angle, rad	Right Ascension, rad	α_1
3	Elevation, rad	Y-angle, rad	Y-angle, rad	Declination, rad	α_2
4	Range rate, km/sec	Range rate, km/sec	Range rate km/sec	Range rate, km/sec	$\dot{\rho}$
5	Azimuth rate, rad/sec	X-angle rate, rad/sec	X-angle rate, rad/sec	Right Ascension rate, rad/sec	$\dot{\alpha}_1$
6	Elevation rate, rad/sec	Y-angle rate, rad/sec	Y-angle rate, rad/sec	Declination rate, rad/sec	$\dot{\alpha}_2$

It will be noted that the elements of X_M are not exactly the observables truly measured by the tracker. Conversion from doppler counts to km/sec, for example, is performed at an early stage in the Data Start link, as is conversion from Hour Angle to Right Asecnsion. Angle rates, which are not truly measured, are obtained by the polynomial fitting operation that precedes the maximum likelihood estimation.

TL2C is the transformation from the L-frame (See Section 2 above) to the C-frame. Its columns are the basis vectors of the L-frame expressed in the C-frame.

NRØT contains three integers that define the axes of rotation of the measurement angles. The values depend on the measurement system type as follows:

NRØT	MEASUREMENT SYSTEM				
	C-Band	Goddard	USBS, 30 ft.	USBS, 85 ft.	DSIF
1	1	-3	-3	-3	1
2	2	-2	-2	1	-2
3	3	1	1	2	-3

NRØT is used to obtain the slant-range vector expressed in the C-frame given the range and the two angles along with the L-frame to C-frame transform TL2C. The process, in general, is: Take the NRØT(1)th column vector of TL2C, where a minus sign on NRØT(1) means take the negative of the vector; rotate it about the NRØT(2)th vector of TL2C by XM(3) radians in a right-handed sense if NRØT(2) is positive, left-handed if NRØT(2) is negative; rotate the resulting vector about the NRØT(3)th vector of TL2C, with the same sign convention, by XM(2) radians; and finally multiply the result by the slant range XM(1). The result is the position of the spacecraft with respect to the tracker in the C-frame. For C-Band, for example, one takes the unit North vector (in C-frame components); rotates it about the East vector by the elevation angle; rotates again about the Down vector by the azimuth angle; and multiplies by range. (Note that it is the vector and not the coordinate system that is being rotated.)

RC2L is the position of the tracker with respect to the C-frame origin expressed in the C-frame. Adding this to the above described slant-range vector gives the spacecraft position in the C-frame.

ØMEGAC and ØMEGA define the rotation rate of the L-frame with respect to the C-frame. This vector will be used in deriving the output gradient PX2M. Note that when DSIF measurements are involved, the calling program (MLESTT) sets ØMEGA = 0.

3.2 Output

XC or X_C is the spacecraft position and velocity in the C-frame. The position, $X_C(1\text{-}3)$, which we shall denote as R_C is computed as described above in the description of NRØT. After the introduction of some notation, R_C will be derived in mathematical notation, as will the velocity, $X_C(4\text{-}6)$, to be denoted as V_C.

Notation:

R_X = Spacecraft/position in X-frame (X = C or X = L or X = M)

V_X = Spacecraft velocity in X-frame

$$X_X = \begin{pmatrix} R_X \\ V_X \end{pmatrix}$$

Ω = L-frame rotation rate vector expressed in C-frame. (Null vector for DSIF.)

βX = the skew-symmetric matrix

$$\begin{pmatrix} 0 & -\beta_3 & \beta_2 \\ \beta_3 & 0 & -\beta_1 \\ -\beta_2 & \beta_1 & 0 \end{pmatrix}$$

which has the effect of crossing the vector β into the vector on which βX operates.

$T(\beta, \alpha)$ is a rotation matrix that rotates the vector on which it operates about the vector β in a right-handed sense through angle α.

Note that

$$\frac{\partial}{\partial\alpha} T(\beta, \alpha) = \beta \times T(\beta, \alpha) = T\beta X$$

Definitions:

e_0 = |NRØT(1)|$^{-th}$ column of TL2I times the sign of NRØT(1)

β_1 = |NRØT(2)|$^{-th}$ column of TL2I times the sign of NRØT(2)

β_2 = |NRØT(3)|$^{-th}$ column of TL2I times the sign of NRØT(3)

Then

$$R_L = \rho \cdot (T_2 \cdot T_1 \cdot e_0) \tag{1}$$

where

$$T_1 = T(\beta_1, \alpha_2)$$

$$T_2 = T(\beta_2, \alpha_1)$$

and

$$V_L = \frac{\partial R_L}{\partial t} = \frac{\partial R_L}{\partial R_M}\frac{\partial R_M}{\partial t} + \frac{\partial R_L}{\partial V_M}\frac{\partial V_M}{\partial t}$$

$$= \frac{\partial R_L}{\partial R_M} V_M \tag{2}$$

(The value $\frac{\partial R_L}{\partial R_M}$ will be derived below.)

We may now derive $X_C = \begin{pmatrix} RC \\ VC \end{pmatrix}$ as follows

$$R_C = R_L + RC2L$$

$$V_C = V_L + \Omega X R_C$$

<u>PX2M</u> is the gradient of X_C with respect to X_M and is partitioned as

$$\begin{array}{c} \\ 3 \\ 3 \end{array} \begin{array}{c} \begin{array}{cc} 3 & 3 \end{array} \\ \left(\begin{array}{c|c} \dfrac{\partial R_C}{\partial R_M} & \dfrac{\partial R_C}{\partial V_M} \\ \hline \dfrac{\partial V_C}{\partial R_M} & \dfrac{\partial V_C}{\partial V_M} \end{array}\right) \end{array}$$

The four 3X3 submatrices are derived as follows:

$$R_C = R_L + RC2L$$

whence

$$\frac{\partial R_C}{\partial R_M} = \frac{\partial R_L}{\partial R_M}$$

$$\frac{\partial R_C}{\partial V_M} = 0 \text{ , since } R_L \text{ is independent of } V_M$$

$$\frac{\partial V_C}{\partial V_M} = \frac{\partial V_L}{\partial V_M} + \Omega X \frac{\partial R_C}{\partial V_M} = \frac{\partial R_L}{\partial R_M}$$

$$\frac{\partial V_C}{\partial R_M} = \frac{\partial V_L}{\partial R_M} + \Omega X \frac{\partial R_C}{\partial R_M} = \frac{\partial V_L}{\partial R_M} + \Omega X \frac{\partial R_L}{\partial R_M}$$

All that remains is to derive $\frac{\partial R_L}{\partial R_M}$ and $\frac{\partial V_L}{\partial R_M}$

From Equation (1)

$$\frac{\partial R_L}{\partial \rho} = T_2 T_1 e_0 = \frac{R_L}{\rho}$$

$$\frac{\partial R_L}{\partial \alpha_1} = \frac{\partial R_L}{\partial T_2}\frac{\partial T_2}{\partial \alpha_1} = \rho(\beta_2 \times T_2 T_1 e_0) = \beta_2 \times R_L$$

$$\frac{\partial R_L}{\partial \alpha_2} = \frac{\partial R_L}{\partial T_1}\frac{\partial T_1}{\partial \alpha_2} = \rho(T_2(\beta_1 \times T_1 e_0))$$

$$= \hat{\beta}_1 \times (\rho T_2 T_1 e_0) = \hat{\beta}_1 \times R_L$$

where

$$\hat{\beta}_1 = T_2 \beta_1$$

whence

$$\left(\frac{\partial R_L}{\partial R_M} = \frac{R_L}{\rho},\ \beta_2 \times R_L,\ \hat{\beta}_1 \times R_L\right)$$

From Equation (2)

$$\frac{\partial V_L}{\partial R_M} = \frac{\partial^2 R_L}{\partial R_M^2} V_M$$

More explicitly

$$\frac{\partial V_L}{\partial \rho} = \dot{\alpha}_1 \beta_2 \times \frac{\partial R_L}{\partial \rho} + \dot{\alpha}_2 \beta_1 \times \frac{\partial R_L}{\partial \rho}$$

$$= \left(\frac{\dot{\rho}}{\rho} I + \alpha_2 \ (\hat{\beta}_1) \times + \dot{\alpha}_1 \ (\beta_2) \ \times \right) \frac{\partial R_L}{\partial \rho} - \frac{\dot{\rho}}{\rho^2} R_L$$

$$= A \frac{\partial R_L}{\partial \rho}$$

where

$$A = \frac{\dot{\rho}}{\rho} I + (\dot{\alpha}_2 \hat{\beta}_1 + \dot{\alpha}_1 \beta_2) \times$$

$$\frac{\partial V_L}{\partial \alpha_1} = A \frac{\partial R_L}{\partial \alpha_1} + \dot{\alpha}_1 \frac{\partial \hat{\beta}_1}{\partial \alpha_1} \times R_L$$

$$= A \frac{\partial R_L}{\partial \alpha_1} + \dot{\alpha}_1 (\beta_2 \times \hat{\beta}_1) \times R_L$$

$$\frac{\partial V_L}{\partial \alpha_2} = A \frac{\partial R_L}{\partial \alpha_2}$$

whence

$$\frac{\partial V_L}{\partial R_M} = A \frac{\partial R_L}{\partial R_M} + \left(- \frac{\rho}{\rho^2} R_L, \ \dot{\alpha}_1 (\beta_2 \times \hat{\beta}_1) \times R_L \ , \ 0 \right)$$

```
$IBFTC MC13X5  XR3,M94,LIST,NODD
      SUBROUTINE MEAS2X (XC,PX2M,XM,NROT,TL2C,RC2L,OMEGAC,OMEGA)
C   O  XC     = CARTESIAN STATE, C-FRAME
C   O  PX2M   = PARTIAL OF X W/R XM
C   I  XM     = STATE IN MEASUREMENT COORDINATES
C              XM(1) = RANGE            XM(4) = RANGE RATE
C              XM(2) = SECOND ROTATION XM(5) = SECOND ROTATION RATE
C              XM(3) = FIRST ROTATION  XM(6) = FIRST ROTATION RATE
C   I  NROT   = SLANT RANGE VECTOR IS TL2C(1,NROT(1)) ROTATED ABOUT
C   I  TL2C          TL2C(1,NROT(2)) BY XM(3) RADIANS AND THEN ABOUT
C                    TL2C(1,NROT(3)) BY XM(2) RADIANS.
C              NEGATIVE VALUES INDICATE NEGATIVE ROTATION
C   I  RC2L   = L-FRAME ORIGIN IN C-FRAME COORDINATES
C   I  OMEGAC= ROTATION VECTOR OF L-FRAME W/R C-FRAME IN C-FRAME COORD
      DOUBLE PRECISION   XC(6) ,PX2M(6,6) ,RC2L(3) ,OMEGAC(3)
     1                  ,XM(6) ,TL2C(3,3)          ,OMEGA
      DIMENSION          NROT(3)
      COMMON             SAVE(66) ,R(3,4) ,W(3,4) ,V(3,4)
      DOUBLE PRECISION   W,R,V
      DOUBLE PRECISION   TP
      DIMENSION          NANG(2)
      DATA  NANG/3,2/
      DO  8 K=1,3
      N = NROT(K)
      IF( N.LT.0 ) GO TO 4
      DO 2 I=1,3
    2 W(I,K) = TL2C(I,N)
      GO TO 8
    4 N =-N
      DO 6 I=1,3
    6 W(I,K) = -TL2C(I,N)
    8 CONTINUE
      DO 10 K=1,2
      NA1 = NANG(K)
      CALL DGTRN( V,0,XM(NA1),W(1,K+1) )
      DO 10 J=1,K
      CALL DMVTRN( V,W(1,J),R,2,1 )
      DO 10 I=1,3
      W(I,J) = R(I,1)
   10 CONTINUE
      DO 12 I=1,3
   12 R(I,4) = XM(1)*W(I,1)
      DO 14 J=1,2
      NA1 = NANG(J)
   14 CALL DCROSS( W(1,J+1),R(1,4),R(1,NA1) )
      DO 16 I=1,3
   16 R(I,1) = W(I,1)
      CALL DCROSS( W(1,3),W(1,2),W(1,1) )
      DO 18 I=1,3
   18 W(I,2) = XM(6)*W(I,2)+XM(5)*W(I,3)
      TP = XM(4)/XM(1)
      DO 20 K=1,3
   20 CALL DCROSS( W(1,2),R(1,K),V(1,K) )
      DO 22 I=4,9
   22 V(I,1) = V(I,1)+TP*R(I,1)
      CALL DCROSS( W,R(1,4),W(1,2) )
      DO 26 I=1,3
      V(I,2) = V(I,2)+XM(6)*W(I,2)
      V(I,4) = OMEGA*OMEGAC(I)
   26 R(I,4) = R(I,4)+RC2L(I)
      DO 30 J=1,4
   30 CALL DCROSS( V(1,4),R(1,J),W(1,J) )
      DO 32 J=1,3
      DO 32 I=1,3
      PX2M(I,J) = R(I,J)
      PX2M(I,J+3) = 0.D0
      PX2M(I+3,J) = V(I,J)+W(I,J)
      PX2M(I+3,J+3) = R(I,J)
   32 CONTINUE
      CALL DMVTRN( R(1,1),XM(4),V,1,1 )
      DO 34 I=1,3
      XC(I) = R(I,4)
   34 XC(I+3) = V(I,1)+W(I,4)
      RETURN
      END
```

Subroutine: MESERP

Purpose: To control writing of a simulated measurement data tape. MESERP calls subroutines that read the control times and other data, manipulate the trajectory tape, compute station (beacon, and onboard) measurements, and write the measurement data tape.

Calling Sequence: CALL MESERP

Common storages used: /BUFCØM/,/INPCØM/,/WCØM/,/EXIC/

Subroutines required: BECSTA, DELEV, ERRØUT, EXINST, INITAP, MEASUR, SKDUL, SØRDR, STARTB, STARTS, TFRAC

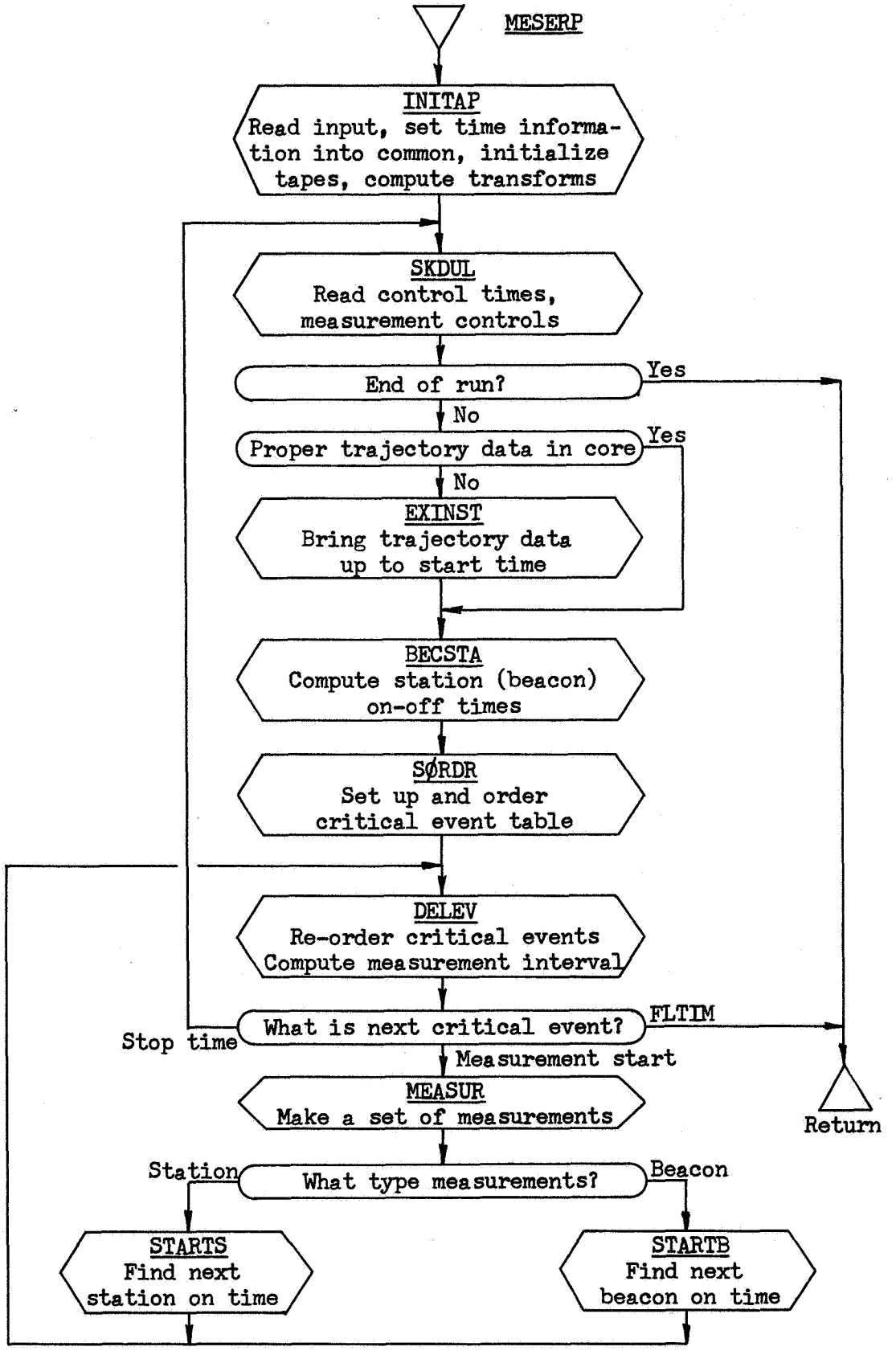
MESERP
INITAP
Read input, set time information into common, initialize tapes, compute transforms
SKDUL
Read control times, measurement controls
End of run?
Yes
No
Proper trajectory data in core
Yes
No
EXINST
Bring trajectory data up to start time
BECSTA
Compute station (beacon) on-off times
SØRDR
Set up and order critical event table
DELEV
Re-order critical events
Compute measurement interval
What is next critical event?
FLTIM
Stop time
Measurement start
MEASUR
Make a set of measurements
Return
Station
What type measurements?
Beacon
STARTS
Find next station on time
STARTB
Find next beacon on time

```
$IBFTC MC13ES  NOREF,M94,NODD,XR3
CMC13ES  MESERP    READS SCHEDULE,COMPUTES + WRITES MEASUREMENTS ACCORD.MSRP0001
      SUBROUTINE MESERP                                                 MSRP0002
      COMMON/INPCOM/C(700)/WCOM/IW(550),CW(1450)/EXIC/W(36),CRX(9,2)    MSRP0003
      COMMON  /BUFCOM/BUFF1(40) ,KEY                                    MSRP0004
C  DIMENSION AND EQUIVALENCE INCLUDE ALL COMMON VARIABLES USED IN ALL   MSRP0005
C    PARTS OF THE MESERP PROGRAM                                        MSRP0006
      DIMENSION     BODC(10,8),     UM(10),    S(23,12),       B(91)    MSRP0007
     1,             OB(18),         EMP(24),   HEAD(24)                 MSRP0008
     2,             NSTX(3),        NOX(3),    ISC(12),        IBC(10)  MSRP0009
     3,             IEMP(24),       IOBR(4),   IOBA(18),       IS(11,12) MSRP0010
     4,             IB(3,12),       ISEE(12),  IBEE(10),       ICAS(3)  MSRP0011
     5,             ISTIM(50),      IBTIM(50)                           MSRP0012
     6,             RX(3,3),        VX(3,3),   TX(2,3),        BIASL(3,22) MSRP0013
     7,             SSTART(75),     SSTOP(75),BSTART(75),      BSTOP(75) MSRP0014
     8,             XMES(5, 85),    XIN(6),    REFS(3),        TI(3)    MSRP0015
      DIMENSION     AN(3,3),        EVNT(6),   TWT(2),         STIME(50) MSRP0016
     1,             BTIME(50),      SECR(12),  SHFC(18),       BECR(10) MSRP0017
     2,             KRX(9,2)                                            MSRP0018
      DIMENSION     BRAD(3),        KSTA(75),  KBEA(75),       KEV(6)   MSRP0019
      EQUIVALENCE  (C(4),RTD),     (C(5),DTR),     (C(6),SPMSD)         MSRP0020
     1,            (C(7),RSPMSD), (C(9),SPDLT),  (C(11),BODC)          MSRP0021
     2,            (C(21),UM),    (C(112),XMIN), (C(113),XMAX)         MSRP0022
     3,            (C(114),RDELAY), (C(200),S),  (C(476),B)            MSRP0023
     4,            (C(556),DELBEC), (C(567),OB), (C(573),DELRAD)       MSRP0024
     5,            (C(580),DELOPT), (C(585),EMP),(C(608),EMP24)        MSRP0025
     6,            (C(673),IKAS),   (C(675),HEAD),(C(699),ITAPE)       MSRP0026
     7,            (C(700),IOCAS),(C(115),XTROUT)                      MSRP0027
     8,            (C(116),CFRAC1),  (C(117),CFRAC2)                   MSRP0028
      EQUIVALENCE  (IW(1),NSTX),  (IW(4),NOX),   (IW(7),IXT)           MSRP0029
     1,            (IW(8),ISC),   (IW(20),IBC),  (IW(30),IEMP)         MSRP0030
     2,            (IW(53),IEMP24), (IW(54),IOBR), (IW(58),IOBA)       MSRP0031
     3,            (IW(180),IS),    (IW(312),IB),  (IW(347),NBEAC)     MSRP0032
     4,            (IW(355),ISEE),  (IW(367),IBEE),(IW(377),ICAS)      MSRP0033
     5,            (IW(380),NMAX),  (IW(382),NOR), (IW(383),ITARG)     MSRP0034
     6,            (IW(384),IK1),   (IW(385),KSMAX),  (IW(386),IK2)    MSRP0035
     7,            (IW(387),KBMAX), (IW(389),ISTIM),  (IW(439),IBTIM)  MSRP0036
     8,            (IW(489),ITRIG),  (IW(490),KOUNT)                   MSRP0037
      EQUIVALENCE  (CW(1),RX),      (CW(10),VX),       (CW(19),TX)     MSRP0038
     1,            (CW(156),BIASL), (CW(222),SSTART), (CW(297),SSTOP)  MSRP0039
     2,            (CW(372),BSTART),(CW(447),BSTOP),  (CW(522),XMES)   MSRP0040
     3,            (CW(1134),XIN),  (CW(1140),TSEC),  (CW(1157),REFS)  MSRP0041
     4,            (CW(1160),TI),   (CW(1163),AN),    (CW(1172),TSECO) MSRP0042
     5,            (CW(1173),GHAR), (CW(1175),OBTIME),(CW(1178),TSTART) MSRP0043
     6,            (CW(1179),FLTIM),(CW(1180),EVNT),  (CW(1188),TWT)   MSRP0044
     7,            (CW(1200),STIME),(CW(1250),BTIME), (CW(1360),SECR)  MSRP0045
     8,            (CW(1372),SHFC), (CW(1426),TWO),   (CW(1427),TFO)   MSRP0046
     9,            (CW(1441),BECR), (CRX,KRX)                          MSRP0047
      DOUBLE PRECISION  DBUFF(10)                                      MSRP0048
      DOUBLE PRECISION  ONTM,      TFST,      TLST,      TAU,      FTR  MSRP0049
     1,                 C1,        C2,        RAMB,      BIAS,     OMG4 MSRP0050
      EQUIVALENCE  (BUFF1(1),IKY),    (BUFF1(2),KEE),    (BUFF1(3),STANAM)MSRP0051
     1,            (BUFF1(4),STNAM1),(BUFF1(5),NRCD),   (BUFF1(6),NKOUNT)MSRP0052
     2,            (BUFF1(7),KONTIN),(BUFF1(8),MTYPE),  (BUFF1(9),NALIGN)MSRP0053
     3,            (BUFF1(10),MODE), (BUFF1(11),FMS),   (BUFF1(12),KTAU) MSRP0054
     4,            (BUFF1(13),DBUFF,ONTM)                              MSRP0055
      EQUIVALENCE  (DBUFF(2),TFST),  (DBUFF(3),TLST),   (DBUFF(4),TAU) MSRP0056
     1,            (DBUFF(5),FTR),   (DBUFF(6),C1),     (DBUFF(7),C2)  MSRP0057
     2,            (DBUFF(8),RAMB),  (DBUFF(9),BIAS),   (DBUFF(10),OMG4) MSRP0058
      DOUBLE PRECISION TWR                                             MSRP0059
      DIMENSION   TYPE(4)                                              MSRP0060
      DATA TYPE/6HC-BAND,6HGODDRD,6HS-BAND,6H DSIF /                   MSRP0061
      DATA QYES,QNO/3HYES,2HNO/                                        MSRP0062
      DATA IQUAL/0/                                                    MSRP0063
C    ASSUMES TRAJECTORY ON BINARY TAPE 10                              MSRP0064
C SUBROUTINES CALLED HERIN                                             MSRP0065
C MC13      NAME                                                       MSRP0066
C  BA      BECSTA                                                      MSRP0067
C  DL      DELEV                                                       MSRP0068
C  ER      ERROUT                                                      MSRP0069
C  JY      EXINST                                                      MSRP0070
C  IT      INITAP                                                      MSRP0071
C  UR      MEASUR                                                      MSRP0072
C  UL      SKDUL                                                       MSRP0073
C  SO      SORDR                                                       MSRP0074
```

```
C  AB      STARTB                                                        MSRP0075
C  AS      STARTS                                                        MSRP0076
C  TM      TFRAC                                                         MSRP0077
C OTHER SUBROUTINES REQUIRED BY THE MESERP PROGRAM                       MSRP0078
C MC13      NAME                                                         MSRP0079
C  FM      ANTR1                                                         MSRP0080
C  AT      ARKTNS                                                        MSRP0081
C  J3      BACK                                                          MSRP0082
C  B4      BARN                                                          MSRP0083
C  I6      BIBCD                                                         MSRP0084
C  IP      /INPCOM/B.D.                                                  MSRP0085
C  MB      BMEAS                                                         MSRP0086
C  AR      CARDIN                                                        MSRP0087
C  CA      CRITA                                                         MSRP0088
C  CC      CRITIC                                                        MSRP0089
C  CR      CRITO                                                         MSRP0090
C  MC      CROSS                                                         MSRP0091
C  MF      DOT,FNORM,VNORM                                               MSRP0092
C  98      FIEF                                                          MSRP0093
C  97      FIFL                                                          MSRP0094
C  96      FIST                                                          MSRP0095
C  GH      GHA                                                           MSRP0096
C  GO      GOTOR                                                         MSRP0097
C  LO      LAYO                                                          MSRP0098
C  LC      LOCAT                                                         MSRP0099
C  MA      MNA                                                           MSRP0100
C  MT      MTRN,VTRN,VTRT                                                MSRP0101
C  NU      NUTAIT                                                        MSRP0102
C  OR      ORB                                                           MSRP0103
C  OY      OYAL                                                          MSRP0104
C  PB      PARAB                                                         MSRP0105
C  QC      QUARTC                                                        MSRP0106
C  50      ROTEQ                                                         MSRP0107
C  9Q      ROVLEY                                                        MSRP0108
C  JW      SBEV2                                                         MSRP0109
C  S2      SHIF2                                                         MSRP0110
C  KD      SKDOUT                                                        MSRP0111
C  SM      SMEAS                                                         MSRP0112
C  O2      SORDR2                                                        MSRP0113
C  SA      STAT                                                          MSRP0114
C  SI      STEPI                                                         MSRP0115
C  SG      STEPT                                                         MSRP0116
C  TC      TCONIC                                                        MSRP0117
C  TM      TIME PACKAGE   DATOUT,TFRAC,TIMED,TIMES                       MSRP0118
      NMAX=85                                                            MSRP0119
      BRAD(1)= BODC(1,3)                                                 MSRP0120
      BRAD(2)= BODC(1,4)                                                 MSRP0121
      BRAD(3)= BODC(1,7)                                                 MSRP0122
      IKY=0                                                              MSRP0123
      INITS=-1                                                           MSRP0124
      CALL INITAP                                                        MSRP0125
20    CONTINUE                                                           MSRP0126
      CALL SKDUL(INITS,NCH)                                              MSRP0127
      IF(NCH.EQ.111) GO TO 250                                           MSRP0128
      IF(TSEC.EQ.TSTART) GO TO 30                                        MSRP0129
      TWR=TSTART                                                         MSRP0130
      CALL TFRAC(TI(1),TI(2)+(TSTART-TSEC)*RSPMSD,TI(1),TI(2))           MSRP0131
      M=1                                                                MSRP0132
      N=3                                                                MSRP0133
105   CONTINUE                                                           MSRP0134
      CALL EXINST(TWR,M,N,XIN,XIN(4),W,CRX,10,ITRIG,KOUNT)               MSRP0135
      IF(M.LE.0) CALL ERROUT(1,10H(4HOM1=I2),M)                          MSRP0136
      IF(N) 115,110,120                                                  MSRP0137
110   CONTINUE                                                           MSRP0138
      CALL ERROUT(1,28H(23H0ERROR ON BIN TAPE READ))                     MSRP0139
115   CONTINUE                                                           MSRP0140
      N=-N                                                               MSRP0141
      NOR=KRX(7,N)                                                       MSRP0142
      GO TO 105                                                          MSRP0143
120   CONTINUE                                                           MSRP0144
      TSEC=TSTART                                                        MSRP0145
30    CONTINUE                                                           MSRP0146
      KMAXS=0                                                            MSRP0147
      KMAXB=0                                                            MSRP0148
      CALL BECSTA(KSTA,KBEA,KMAXS,KMAXB)                                 MSRP0149
```

```
      EVNT(1) = SSTART                                                  MSRP0150
      EVNT(2) = BSTART                                                  MSRP0151
      EVNT(3) = FLTIM + 9999.                                           MSRP0152
      EVNT(4) = EVNT(3)                                                 MSRP0153
      EVNT(5) = TSTART                                                  MSRP0154
      EVNT(6) = FLTIM                                                   MSRP0155
C EVNT(3)  ONBOARD OPTICAL  TEMPORARILY OUT                             MSRP0156
C EVNT(4)  ONBOARD RADAR    TEMPORARILY OUT                             MSRP0157
      DO 1 I=1,6                                                        MSRP0158
1     KEV(I)=I                                                          MSRP0159
      CALL SORDR(EVNT,KEV,6)                                            MSRP0160
43    CONTINUE                                                          MSRP0161
      CALL DELEV(EVNT,KEV,DEL,KSTOP,KSTA(IK1))                          MSRP0162
      IF(KSTOP-5) 50,20,250                                             MSRP0163
50    CONTINUE                                                          MSRP0164
      TSTP=EVNT(1)                                                      MSRP0165
      GO TO (60,70,80,90),KSTOP                                         MSRP0166
60    CONTINUE                                                          MSRP0167
      TSTOP=SSTOP(IK1)                                                  MSRP0168
      N=KSTA(IK1)                                                       MSRP0169
      L=ISC(N)                                                          MSRP0170
      GO TO 100                                                         MSRP0171
70    CONTINUE                                                          MSRP0172
      TSTOP=BSTOP(IK2)                                                  MSRP0173
      N=KBEA(IK2)                                                       MSRP0174
      L=IBC(N)                                                          MSRP0175
      GO TO 100                                                         MSRP0176
80    CONTINUE                                                          MSRP0177
C SET TSTOP,L, FOR MEASUR CALL FOR  ONBOARD OPTICAL MEASUREMENTS        MSRP0178
      GO TO 100                                                         MSRP0179
90    CONTINUE                                                          MSRP0180
C SET TSTOP,L  FOR MEASUR CALL FOR  ONBOARD RADAR   MEASUREMENTS        MSRP0181
100   CONTINUE                                                          MSRP0182
      CALL MEASUR(TSTP,TSTOP,KSTOP,DEL,L,BRAD,KMAXS,KMAXB)              MSRP0183
      IF(KOUNT.LE.0) GO TO 150                                          MSRP0184
      DO 101 I=1,KOUNT                                                  MSRP0185
  101 BACKSPACE 10                                                      MSRP0186
      M=0                                                               MSRP0187
      N=18                                                              MSRP0188
      TWR=TSEC                                                          MSRP0189
      CALL EXINST(TWR,M,N,XIN,XIN(4),W,CRX,10,ITRIG,KOUNT)              MSRP0190
  150 ICAS(3)=KSTOP                                                     MSRP0191
      ITRIG=0                                                           MSRP0192
      KOUNT=0                                                           MSRP0193
      GO TO (160,170,180,190),KSTOP                                     MSRP0194
160   CONTINUE                                                          MSRP0195
      CALL STARTS(KMAXS,KSTA)                                           MSRP0196
      GO TO 43                                                          MSRP0197
170   CONTINUE                                                          MSRP0198
      CALL STARTB(KMAXB,KBEA)                                           MSRP0199
      GO TO 43                                                          MSRP0200
180   CONTINUE                                                          MSRP0201
C  SOMETHING FOR ONBOARD OPTICAL IF NECESSARY                           MSRP0202
      GO TO 43                                                          MSRP0203
190   CONTINUE                                                          MSRP0204
C SOMETHING FOR ONBOARD RADAR  IS NECESSARY                             MSRP0205
      GO TO 43                                                          MSRP0206
250   CONTINUE                                                          MSRP0207
      WRITE(12) BUFF1                                                   MSRP0208
      WRITE(12)(IQUAL,I=1,85),((XMES(I,J),J=1,85),I=1,5)                MSRP0209
C***  CHECK BINARY OUTPUT                                               MSRP0210
      QOUT=QNO                                                          MSRP0211
      IF(KONTIN.EQ.1) QOUT=QYES                                         MSRP0212
      WRITE(6,601) IKY,STANAM,STNAM1,TYPE(MTYPE),QOUT,TFST              MSRP0213
  601 FORMAT(//24H ***  RECORD PAIR NUMBER,I5//75H RECEIVING STATION   TMSRP0214
     1RANSMITTING STATION   MEASUREMENT TYPE   CONTINUATION/7X,A6,15X,A6MSRP0215
     2,15X,A6,12X,A3//12H DATA BEGINS,D24.16,20H SECONDS FROM 1950.0)   MSRP0216
      TEMP=(TFST -.5364576D9)*RSPMSD                                    MSRP0217
      CALL TFRAC(6209.,TEMP,XO1,XO2)                                    MSRP0218
      CALL DATOUT(XO1,XO2,YO1,YO2,0)                                    MSRP0219
      WRITE(6,602) TLST                                                 MSRP0220
  602 FORMAT(12H0 DATA ENDS ,D24.16,20H SECONDS FROM 1950.0)            MSRP0221
      TEMP=(TLST -.5364576D9)*RSPMSD                                    MSRP0222
      CALL TFRAC(6209.,TEMP,XO1,XO2)                                    MSRP0223
      CALL DATOUT(XO1,XO2,YO1,YO2,0)                                    MSRP0224
```

```
      WRITE(6,606) NKOUNT                                               MSRP0225
  606 FORMAT(12H0TIME POINTS/I7)                                        MSRP0226
      IF(XTROUT.EQ.0.) GO TO 61                                         MSRP0227
      WRITE(6,607) KEE,NRCD,NALIGN,MODE,FMS,KTAU,ONTM, (DBUFF(I),I=4,10)MSRP0228
     1,(IQUAL,(XMES(I,J),I=1,5),J=1,NKOUNT)                             MSRP0229
  607 FORMAT(5H0NEOT,3X,4HNRCD,3X,6HNALIGN,3X,4HMODE,7X,8HMEAS INT,6X   MSRP0230
     1,4HKTAU,11X,6HONTIME,22X,3HTAU/I4,I7,2I8,E19.8,I6,D27.16,D26.16// MSRP0231
     213X,3HFTR,23X,2HC1,24X,2HC2,24X,2HDR/4D26.16//12X,4HBIAS,21X,5HRATMSRP0232
     3IO/2D26.16//3H IQ,11X,4HTIME,15X,5HANG 1,15X,5HANG 2,15X,5HRANGE, MSRP0233
     414X,7HDOPPLER/(I3,5E20.8))                                        MSRP0234
C***  END OF BINARY OUTPUT                                              MSRP0235
   61 KEE=1                                                             MSRP0236
      IKY=IKY+1                                                         MSRP0237
      NRCD=NRCD+1                                                       MSRP0238
      WRITE(12) BUFF1                                                   MSRP0239
C***  CHECK BINARY OUTPUT                                               MSRP0240
      WRITE(6,703)                                                      MSRP0241
  703 FORMAT(//42X,35H *** END OF SIMULATED DATA TAPE ***)              MSRP0242
C*** END BINARY OUTPUT                                                  MSRP0243
      ENDFILE 12                                                        MSRP0244
      ICAS(3)=6                                                         MSRP0245
      RETURN                                                            MSRP0246
      END                                                               MSRP0247
```

Subroutine: MIXIT

Purpose: Reads edited data from tape 12 and previously edited data from tape NIN, arranges data in order of data arc start times, and writes merged data on tape NØUT.

Calling Sequence: CALL MIXIT

Common storages used: /MIXCØM/,/ØUTCØM/,/MESCØM/

Subroutines requires: None.

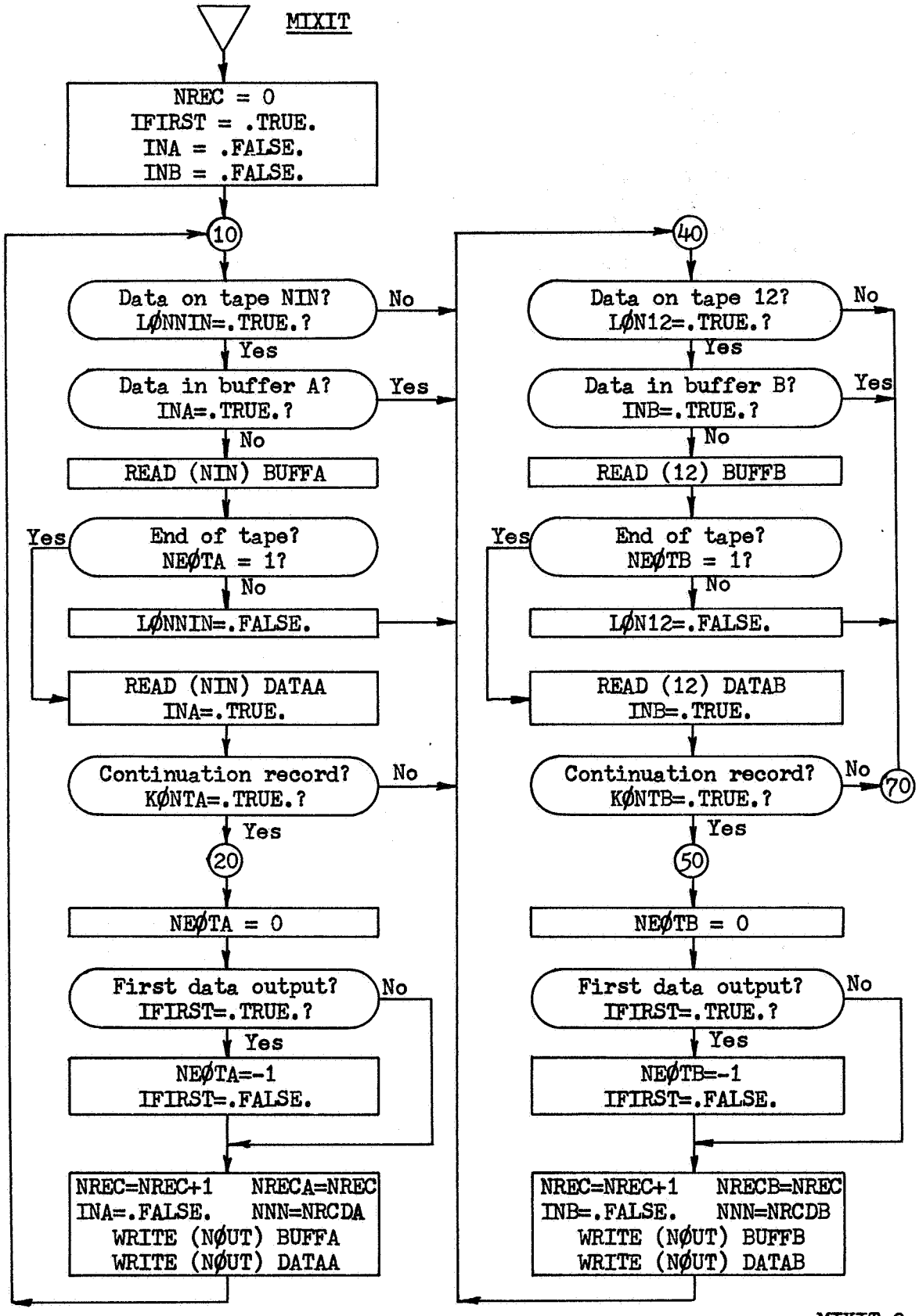
MIXIT
NREC = 0
IFIRST = .TRUE.
INA = .FALSE.
INB = .FALSE.
10
Data on tape NIN?
LØNNIN=.TRUE.?
No
Yes
Data in buffer A?
INA=.TRUE.?
Yes
No
READ (NIN) BUFFA
End of tape?
NEØTA = 1?
Yes
No
LØNNIN=.FALSE.
READ (NIN) DATAA
INA=.TRUE.
Continuation record?
KØNTA=.TRUE.?
No
Yes
20
NEØTA = 0
First data output?
IFIRST=.TRUE.?
No
Yes
NEØTA=-1
IFIRST=.FALSE.
NREC=NREC+1 NRECA=NREC
INA=.FALSE. NNN=NRCDA
WRITE (NØUT) BUFFA
WRITE (NØUT) DATAA
40
Data on tape 12?
LØN12=.TRUE.?
No
Yes
Data in buffer B?
INB=.TRUE.?
Yes
No
READ (12) BUFFB
End of tape?
NEØTB = 1?
Yes
No
LØN12=.FALSE.
READ (12) DATAB
INB=.TRUE.
Continuation record?
KØNTB=.TRUE.?
No
70
Yes
50
NEØTB = 0
First data output?
IFIRST=.TRUE.?
No
Yes
NEØTB=-1
IFIRST=.FALSE.
NREC=NREC+1 NRECB=NREC
INB=.FALSE. NNN=NRCDB
WRITE (NØUT) BUFFB
WRITE (NØUT) DATAB

MIXIT-2

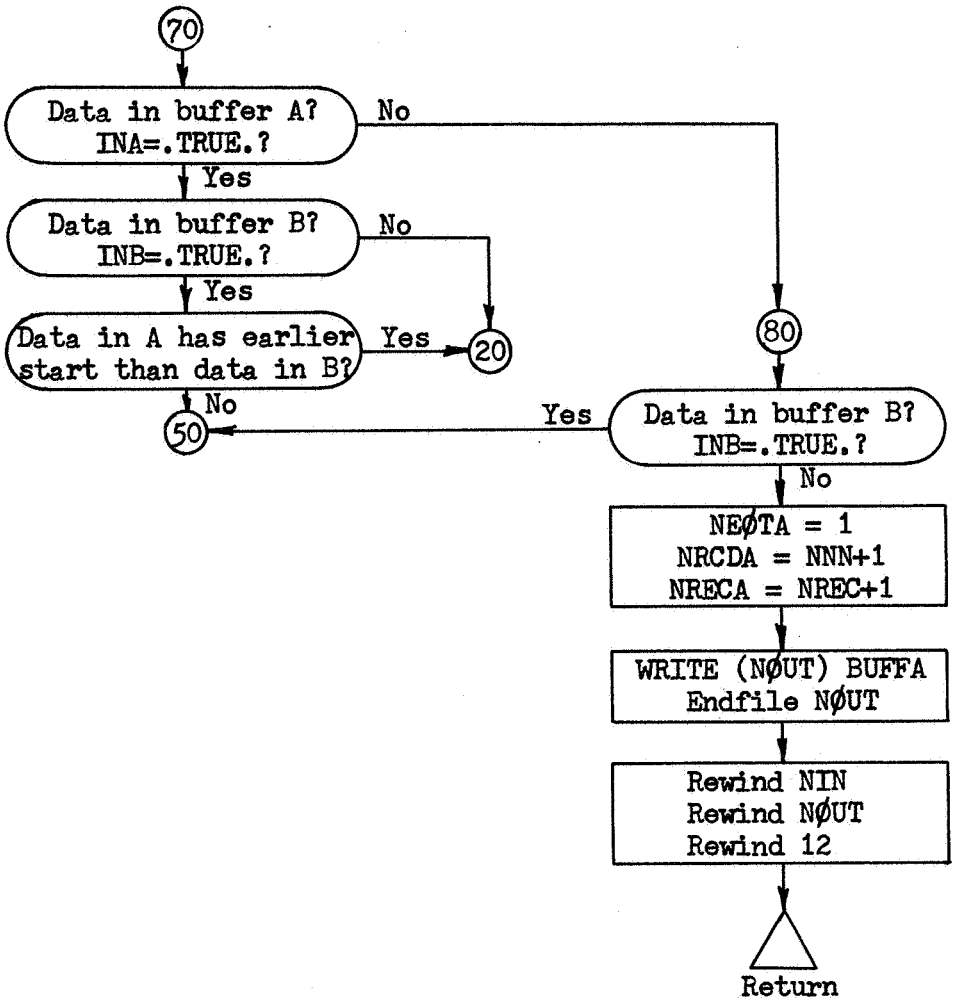
70
Data in buffer A?
INA=.TRUE.?
No
Yes
Data in buffer B?
INB=.TRUE.?
No
Yes
Data in A has earlier start than data in B?
Yes
20
No
50
80
Yes
Data in buffer B?
INB=.TRUE.?
No
NEØTA = 1
NRCDA = NNN+1
NRECA = NREC+1
WRITE (NØUT) BUFFA
Endfile NØUT
Rewind NIN
Rewind NØUT
Rewind 12
Return

```
$IBFTC MC134T  M94,NODD,XR3
CMC134T   MERGES EDITED DATA AND PUTS IT ON OUTPUT TAPE NOUT
      SUBROUTINE MIXIT
      COMMON  /MIXCOM/IMIX(4)
      LOGICAL LONNIN,   LON12
      EQUIVALENCE              (IMIX(1),LONNIN),     (IMIX(2),LON12)
     1,  (IMIX(3),NIN),        (IMIX(4),NOUT)
C
      COMMON  /OUTCOM/BUFFA(40)
      DOUBLE PRECISION  ASTA
      LOGICAL KONTA
      EQUIVALENCE              (BUFFA(1),NRECA),     (BUFFA(2),NEOTA)
     1,  (BUFFA(5),NRCDA),     (BUFFA(7),KONTA),     (BUFFA(13),ASTA)
C
      COMMON  /MESCOM/DATAA(510)
C
      DIMENSION   BUFFB(40),    DATAB(510)
      DOUBLE PRECISION  ASTB
      LOGICAL KONTB
      EQUIVALENCE              (BUFFB(1),NRECB),     (BUFFB(2),NEOTB)
     1,  (BUFFB(5),NRCDB),     (BUFFB(7),KONTB),     (BUFFB(13),ASTB)
C
      LOGICAL INA,      INB,      IFIRST
C
C     INITIALIZE
      NREC=0
      IFIRST=.TRUE.
      INA=.FALSE.
      INB=.FALSE.
   10 IF(.NOT.LONNIN.OR.INA) GO TO 40
C     READ A KEY RECORD FROM TAPE NIN
      READ(NIN) BUFFA
C     TEST FOR END OF TAPE RECORD
      IF(NEOTA.EQ.1) GO TO 30
C     READ A DATA RECORD FROM TAPE NIN
      READ(NIN) DATAA
      INA=.TRUE.
      IF(.NOT.KONTA) GO TO 40
C     IF CONTINUATION RECORD PAIR, WRITE IT ON NOUT IMMEDIATELY
   20 NEOTA=0
      IF(.NOT.IFIRST) GO TO 25
C     IF FIRST OUTPUT RECORD, SET NEOTA=-1
      NEOTA=-1
      IFIRST=.FALSE.
C     INCREMENT RECORD PAIR OUTPUT COUNT
   25 NREC=NREC+1
      NRECA=NREC
      NNN=NRCDA
C     WRITE BOTH KEY AND DATA RECORDS ON NOUT
      WRITE(NOUT) BUFFA
      WRITE(NOUT) DATAA
      INA=.FALSE.
      GO TO 10
   30 LONNIN=.FALSE.
   40 IF(.NOT.LON12.OR.INB) GO TO 70
C     READ A KEY RECORD FROM TAPE 12
      READ(12) BUFFB
C     TEST FOR END OF TAPE RECORD
      IF(NEOTB.EQ.1) GO TO 60
C     READ A DATA RECORD FROM TAPE 12
      READ(12) DATAB
      INB=.TRUE.
      IF(.NOT.KONTB) GO TO 70
C     IF CONTINUATION RECORD PAIR, WRITE IT ON NOUT IMMEDIATELY
   50 NEOTB=0
      IF(.NOT.IFIRST) GO TO 55
C     IF FIRST OUTPUT RECORD, SET NEOTB=-1
      NEOTB=-1
      IFIRST=.FALSE.
C     INCREMENT RECORD PAIR OUTPUT COUNT
   55 NREC=NREC+1
      NRECB=NREC
      NNN=NRCDB
C     WRITE BOTH KEY AND DATA RECORDS ON NOUT
      WRITE(NOUT) BUFFB
```

```
      WRITE(NOUT) DATAB                                                 MIXT0075
      INB=.FALSE.                                                       MIXT0076
      GO TO 40                                                          MIXT0077
   60 LON12=.FALSE.                                                     MIXT0078
   70 IF(.NOT.INA) GO TO 80                                             MIXT0079
      IF(.NOT.INB) GO TO 20                                             MIXT0080
C     HERE WE TEST ARC START TIMES TO SEE WHICH RECORD PAIR GOES ON     MIXT0081
C     NOUT FIRST                                                        MIXT0082
      IF(ASTA-ASTB) 20,20,50                                            MIXT0083
   80 IF(INB) GO TO 50                                                  MIXT0084
C     SET NEOTA =+1 FOR END OF TAPE RECORD                              MIXT0085
      NEOTA=1                                                           MIXT0086
C     INCREMENT RECORD PAIR COUNT AND ARC RECORD COUNT                  MIXT0087
      NRCDA=NNN+1                                                       MIXT0088
      NRECA=NREC+1                                                      MIXT0089
C     WRITE END OF TAPE KEY RECORD                                      MIXT0090
      WRITE(NOUT) BUFFA                                                 MIXT0091
      ENDFILE NOUT                                                      MIXT0092
      REWIND NIN                                                        MIXT0093
      REWIND NOUT                                                       MIXT0094
      REWIND 42                                                         MIXT0095
      RETURN                                                            MIXT0096
      END                                                               MIXT0097
```

Subroutine: MLESTT

Purpose: Control subroutine for the data start link of the DCP. Computes an estimate of the vehicle state by maximum likelihood estimation without *a priori* knowledge of the state.

Calling Sequence: CALL MLESTT

Common storages used: //253 cells,/DCPCØM/,/MLECØM/

Subroutines required: MXLEST, STTBGN, STTDAT, STTEND, STTFIT

Discussion

MLESTT controls the computation of a maximum likelihood estimate of the vehicle state from a small number of data points, to be used as an *a priori* estimate for differential correction. The various steps required are controlled by the following subroutines:

STTBGN	Reads overlay data into DCPCØM. Loads constants into DATCØM and MLECØM, and initializes the data start.
STTDAT	Selects appropriate data from the edited data tape, and loads the working array DATA with the selected data.
STTFIT	Fits each type of data with a time polynomial in the least squares sense. Outputs the zeroth and first order coefficients as smoothed values of the measurement and its derivative.
MXLEST	Computes the maximum likelihood estimate of vehicle state. The subroutine uses the smoothed measurements as the starting point of an iterative estimation.
STTEND	Stores the estimate computed by MXLEST in ESTCØM. Also writes the estimate on the estimate tape.

The subroutine requires measurement of two angles and either range or doppler. The controls for the selection of data, smoothing, and convergence control are described in the individual subroutine descriptions.

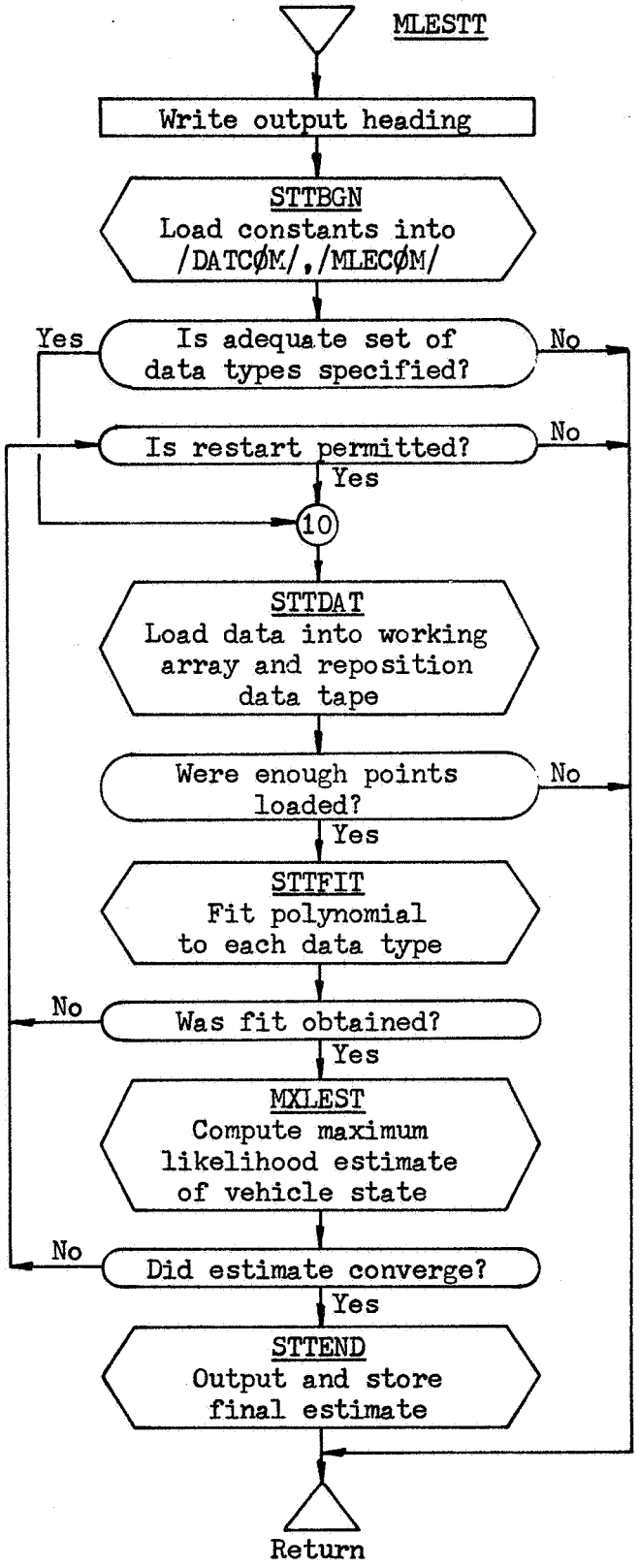
MLESTT
Write output heading
STTBGN
Load constants into
/DATCØM/,/MLECØM/
Yes
Is adequate set of
data types specified?
No
Is restart permitted?
No
Yes
10
STTDAT
Load data into working
array and reposition
data tape
Were enough points
loaded?
No
Yes
STTFIT
Fit polynomial
to each data type
No
Was fit obtained?
Yes
MXLEST
Compute maximum
likelihood estimate
of vehicle state
No
Did estimate converge?
Yes
STTEND
Output and store
final estimate
Return

```
$IBFTC MC13A5  XR3,M94,NODD,LIST
      SUBROUTINE MLESTT                                                 MLES0001
C     CONTROL ROUTINE FOR MAXIMUM LIKELIHOOD DATA START                 MLES0002
C                                                                       MLES0003
      COMMON              /DCPCOM/CDCP(900)                             MLES0004
      EQUIVALENCE         (CDCP(111),IERR  )                            MLES0005
      COMMON              /MLECOM/CMLE(1070)                            MLES0006
      DIMENSION            DATA(5,100)                                  MLES0007
      LOGICAL              LAUTO,LMLE                                   MLES0008
      EQUIVALENCE         (CMLE(570),DATA  ) ,(CMLE(432),NPTSTT)        MLES0009
     1                   ,(CMLE(405),LAUTO ) ,(CMLE(  1),TSTART)        MLES0010
     2                   ,(CMLE(406),LMLE  )                            MLES0011
C                                                                       MLES0012
  601 FORMAT(//48X,23H*** DATA START LINK ***/)                         MLES0013
  602 FORMAT(//46X,28H*** EXIT DATA START LINK ***)                     MLES0014
  603 FORMAT(//52H **** DID NOT SUCCEED IN OBTAINING STARTING ESTIMATE/)MLES0015
  604 FORMAT(//30H  *** INSUFFICIENT DATA LOADED)                       MLES0016
  605 FORMAT(//48H   ** POLYNOMIAL FIT FAILED FOR THIS SET OF DATA)     MLES0017
  606 FORMAT(//25H   ** TRY NEW SET OF DATA)                            MLES0018
  607 FORMAT(//74H   ** MAXIMUM-LIKELIHOOD ESTIMATOR FAILED TO CONVERGE MLES0019
     1FOR THIS SET OF DATA)                                             MLES0020
  608 FORMAT(//41H  *** TRIAL OF NEW SET OF DATA PROHIBITED)            MLES0021
  609 FORMAT(//45H  *** INSUFFICIENT DATA TYPES TO DEFINE STATE)        MLES0022
C                                                                       MLES0023
C     INITIALIZE                                                        MLES0024
    1 CONTINUE                                                          MLES0025
      WRITE (6,601)                                                     MLES0026
      CALL STTRGN                                                       MLES0027
      IF (IERR.NE.0)      GO TO 80                                      MLES0028
C                                                                       MLES0029
C     LOAD DATA                                                         MLES0030
   10 CONTINUE                                                          MLES0031
      CALL STTDAT                                                       MLES0032
      IF (IERR.NE.0)      GO TO 81                                      MLES0033
C                                                                       MLES0034
C     FIT POLYNOMIALS TO DATA                                           MLES0035
   20 CONTINUE                                                          MLES0036
      CALL STTFIT                                                       MLES0037
      IF (IERR.NE.0)      GO TO 82                                      MLES0038
C                                                                       MLES0039
C     COMPUTE MAXIMUM LIKELIHOOD ESTIMATE                               MLES0040
   30 CONTINUE                                                          MLES0041
      CALL MXLEST                                                       MLES0042
      IF (IERR.NE.0)      GO TO 999                                     MLES0043
      IF (.NOT.LMLE)      GO TO 83                                      MLES0044
C                                                                       MLES0045
C     OUTPUT AND STORE FINAL ESTIMATE                                   MLES0046
   40 CONTINUE                                                          MLES0047
      CALL STTEND                                                       MLES0048
      GO TO 999                                                         MLES0049
C                                                                       MLES0050
C     WRITE ERROR MESSAGES                                              MLES0051
   80 WRITE (6,609)                                                     MLES0052
      GO TO 88                                                          MLES0053
   81 WRITE (6,604)                                                     MLES0054
      GO TO 88                                                          MLES0055
   82 WRITE (6,605)                                                     MLES0056
      GO TO 84                                                          MLES0057
   83 WRITE (6,607)                                                     MLES0058
   84 IF (.NOT.LAUTO)     GO TO 86                                      MLES0059
      WRITE (6,606)                                                     MLES0060
      TSTART = DATA(1,NPTSTT)*1.000001                                  MLES0061
      GO TO 10                                                          MLES0062
   86 WRITE (6,608)                                                     MLES0063
   88 IERR = 15                                                         MLES0064
      WRITE (6,603)                                                     MLES0065
C                                                                       MLES0066
  999 RETURN                                                            MLES0067
      END
```

Subroutine: MNA

Purpose: To provide the rotation matrix EMN which transforms Earth's true equator, equinox coordinates to moon's time equator, prime meridan coordinates.

Calling Sequence: CALL MNA(TIME,ØM,CR,DT,EPSIL,RØ,G,GP, WW,EMN)

Input and Output

I/Ø	Symbolic Name or Location	Program Dimensions	Math Symbol	Data Dimensions or Units	Definition
I	TIME		d	days	Days since 1950 Jan 0.0
I	OM		Ω	rad	Argument of the descending node.
I	CR		Γ	rad	Mean longitude of the moon.
I	DT		$\Delta\Psi+\delta\Psi$	rad	Nutation in longitude.
I	EPSIL		$\bar{\epsilon}+\Delta\epsilon+\delta\epsilon$	rad	True obliquity.
Ø	RØ		ρ	rad	Libration in inclination.
Ø	G		g	rad	Mean anomaly of the moon.
Ø	GP		g'	rad	Mean anomaly of the sun.
Ø	WW		ω	rad	Argument of perigee of the moon.
Ø	EMN	(3,3)			Rotation matrix.

Common storages used: None.

Subroutines required: ARKTNS

Transformation From Earth's True Equator to Moon's True Equator

The two rectangular systems are related through Λ, Ω', and i by the rotation:

$$\begin{matrix} x \\ y \\ z \end{matrix}_{\text{MOON}} = \begin{matrix} b_{11} & b_{12} & b_{13} \\ b_{21} & b_{22} & b_{23} \\ b_{31} & b_{32} & b_{33} \end{matrix} \begin{matrix} X' \\ Y' \\ Z' \end{matrix}_{\text{EARTH}}$$

where

$$b_{22} = - \sin \Lambda \sin \Omega' + \cos \Lambda \cos \Omega' \cos i$$

$$b_{23} = \cos \Lambda \sin i$$

$$b_{31} = \sin \Omega' \sin i$$

$$b_{32} = -\cos \Omega' \sin i$$

$$b_{33} = \cos i$$

$$b_{11} = \cos \Lambda \cos \Omega' - \sin \Lambda \sin \Omega' \cos i$$

$$b_{12} = \cos \Lambda \sin \Omega' + \sin \Lambda \cos \Omega' \cos i$$

$$b_{13} = \cos \Lambda \sin i$$

$$b_{21} = -\sin \Lambda \cos \Omega' - \cos \Lambda \sin \Omega' \cos i$$

i is the inclination of the moon's true equator to the earth's equator.

Ω' is the right ascension of the ascending node of the moon's true equator

Λ is the anomaly from the node to the X axis.

$$\Lambda = \Delta + (\Gamma + \tau) - (\Omega + \sigma)$$

Δ is the anomaly from the node to the ascending node of the moon's true equator on the ecliptic.

Ω is the mean longitude of the descending node of the moon's mean equator on the ecliptic.

Γ is the mean longitude of the moon.

σ is the libration in the node.

τ is the libration in the mean longitude.

ρ is the libration in the inclination.

$\delta\Psi$, ε, Ω, and Γ are input quantities obtained from NUTAIT. The remainder are computed from the following equations.

I = inclination of moon's equator to ecliptic.

$I = 1.535^{\circ}$

g = mean anomaly of moon.

$g = 215.54013 + 13.064992\ d$

g' = mean anomaly of sun.

$g' = 358.009067 + .9856005\ d$

ω = argument of perigee of moon.

$\omega = 196.745632 + .1643586\ d$

where d = days from 1950.

$$\sigma \sin I = -.0303777 \sin g + .0102777 \sin (g + 2\omega) - .00305555 \sin (2g + 2\omega)$$

$$\tau = -.003333 \sin g + .0163888 \sin g' + .005 \sin 2\omega$$

$$\rho = -.0297222 \cos g + .0102777 \cos (g + 2\omega) - .00305555 \cos (2g + 2\omega)$$

$$\cos i = \cos (\Omega + \sigma + \delta\Psi) \sin \varepsilon \sin (I + \rho) + \cos \varepsilon \cos (I + \rho) \qquad 0 < i < 90^\circ$$

$$\sin \Omega' = -\sin (\Omega + \sigma + \delta\Psi) \sin (I + \rho) \csc i \qquad -90^\circ <' \Omega' < 90^\circ$$

$$\sin \Delta = -\sin (\Omega + \sigma + \delta\Psi) \sin \varepsilon \csc i$$

$$\cos \Delta = -\sin (\Omega + \sigma + \delta\Psi) \sin \Omega' \cos \varepsilon - \cos (\Omega + \sigma + \delta\Psi) \cos \Omega' \qquad 0^\circ \leq \Delta < 360^\circ$$

Reference: JPL Technical Report No. 32-223

```
$IBFTC MC13MA  NOREF,M94,NODD,XR3
      SUBROUTINE MNA(TIME,OM,CR,DT,EPSIL,RO,G,GP,WW,EM)
CMC13MA   MNA (IV)
      DIMENSION EM(3,3),DF(3)
      DOUBLE PRECISION DD
      DATA DTR/.017453293/
      D = TIME
      T = D/36525.
      T2 = T*T
      T3 = T2*T
      A=13.064992
      DO 6 I=1,3
      DD=D
      DD=DD*(A/360.)
      DF(I)=IDINT(DD)
      DF(I)=DD-DF(I)
      GO TO (4,5,6),I
    4 A=.9856005
      GO TO 6
    5 A=.1643586
    6 CONTINUE
      G=215.54013+360.*DF(1)
      GP=358.009067+360.*DF(2)
      WW=196.745632+360.*DF(3)
      G=G*DTR
      GP=GP*DTR
      WW=WW*DTR
      YN=1.535*DTR
      RO = -.0297222*COS (G) + .01020777*COS (G+2.*WW)
     1 -.00305555*COS (2.*G+2.*WW)
      TA = -.003333*SIN (G) + .0163888*SIN (GP)
     1 +.005*SIN (2.*WW)
      SG = -.0302777*SIN (G) + .0102777*SIN (G+2.*WW)
     1 -.00305555*SIN (2.*G+2.*WW)
      SG=(SG*DTR)/SIN(YN)
      RO=RO*DTR
      TA=TA*DTR
      YN = YN + RO
      RO = OM + SG + DT
      CI = COS (RO)*SIN (EPSIL)*SIN (YN)
     1 +COS (EPSIL)*COS (YN)
      SI=1.-CI*CI
      SI = SQRT (SI)
      SO = -SIN (RO)*SIN (YN)/SI
      CO=1.-SO*SO
      CO=SQRT(CO)
      SD = -SIN (RO)*SIN (EPSIL)/SI
      CD = -SIN (RO)*SO*COS (EPSIL) - COS (RO)*CO
      DL=ARKTNS(360,CD,SD)
      CA = DL + (CR + TA) - (OM + SG)
      SA=SIN(CA)
      CA=COS(CA)
      RO = COS (RO)*SIN (EPSIL)/(SI*CD)
      EM(1,1) = CA*CO - SA*SO*CI
      EM(1,2) = CA*SO + SA*CO*CI
      EM(1,3) = SA*SI
      EM(2,1) = -SA*CO - CA*SO*CI
      EM(2,2) = -SA*SO + CA*CO*CI
      EM(2,3) = CA*SI
      EM(3,1) = SO*SI
      EM(3,2) = -CO*SI
      EM(3,3) = CI
      RETURN
      END
```

Subroutine: MTRN

Purpose: Computes the matrix product of two 3X3 matrices.

Calling Sequence: CALL MTRN(A,B,C)

Input and Output

I/Ø	Symbolic Name or Location	Program Dimensions	Math Symbol	Data Dimensions or Units	Definition
I	A,B	(3,3)			Input matrices.
Ø	C	(3,3)			AB

Common storages used: None.

Subroutines required: None.

```
$IBFTC MTRN     XR3,M94,NODD
      SUBROUTINE MTRN(A,B,C)                                    MTRN0001
      DIMENSION  A(3,3) ,B(3,3) ,C(3,3)                         MTRN0002
      DO 1 I=1,3                                                MTRN0003
      DO 1 J=1,3                                                MTRN0004
      C(I,J) = 0.                                               MTRN0005
      DO 1 K=1,3                                                MTRN0006
    1 C(I,J) = C(I,J)+A(I,K)*B(K,J)                             MTRN0007
      RETURN                                                    MTRN0008
      END                                                       MTRN0009
```

Subroutine: MXLEST

Purpose: Computes a maximum likelihood estimate of vehicle state using the data from a single tracking station. The computations are described in detail in Appendix B of Reference 1.

Calling Sequence: CALL MXLEST

Common storages used: //162 cells,/DATCØM/,/DCPCØM/,/DFMCØM/,/EDTCØM/, /ESTCØM/,/MLECØM/

Subroutines required: DEHA, DEQTR, DGTRN, DGTSN, DMPLY, DMVTRN, DNØRM, DPFMRS, MEAS2X, PSEUDØ, STEPDI, STTIME

```
$IBFTC MC13M5  XR3,M94,NODD,LIST
      SUBROUTINE MXLEST                                                 MXLE0001
C     COMPUTES MAXIMUM LIKELIHOOD ESTIMATE OF VEHICLE STATE             MXLE0002
C                                                                       MXLE0003
      DOUBLE PRECISION   DATAN2 ,DCOS ,DNORM ,DSIN                      MXLE0004
C                                                                       MXLE0005
      COMMON            /DCPCOM/CDCP(900)                               MXLE0006
      DOUBLE PRECISION   ALOWR ,BDOWN ,CNST(7) ,EPSBAR ,CONTRL(20)      MXLE0007
     1                  ,AUPPR ,BUP   ,RCNST   ,EPSDEL ,RTD            MXLE0008
     2                         ,BO    ,VCNST           ,SCALE  (6)     MXLE0009
      DIMENSION          CBODY(8,11) ,NSCTRL(14)                       MXLE0010
      EQUIVALENCE               (CDCP(112),ETAPE ) ,(CDCP(683),NSTTM )  MXLE0011
     1    ,(CDCP(758),INDSTA) ,(CDCP(777),ICB   ) ,(CDCP(684),NSTTR )  MXLE0012
     2    ,(CDCP( 17),CBODY ) ,(CDCP(111),IERR  ) ,(CDCP(  7),RTD   )  MXLE0013
     3    ,(CDCP(825),CONTRL) ,(CDCP(787),NSCTRL) ,(CDCP(813),SCALE )  MXLE0014
      EQUIVALENCE               (CONTRL(18),BDOWN ),(CONTRL( 2),EPSBAR) MXLE0015
     1    ,(CONTRL(20),ALOWR ),(CONTRL(17),BUP   ),(CONTRL( 3),EPSDEL) MXLE0016
     2    ,(CONTRL(19),AUPPR ),(CONTRL( 8),CNST  ),(CONTRL( 4),EPSEUD) MXLE0017
     3    ,(CONTRL(16),BO    ),(CONTRL(15),CNTL  ),(CONTRL( 6),RCNST ) MXLE0018
     4                                            ,(CONTRL( 7),VCNST ) MXLE0019
      EQUIVALENCE               (NSCTRL(11),MAXAMB),(NSCTRL( 8),KSCALE) MXLE0020
     1                         ,(NSCTRL( 7),MTRY  )                   MXLE0021
C                                                                       MXLE0022
      COMMON            /EDTCOM/INDDAT(40),BUFDAT(85,6)                 MXLE0023
      DOUBLE PRECISION   DRNGE ,OMG3 ,ONTIME                            MXLE0024
      EQUIVALENCE       (INDDAT(27),DRNGE ) ,(INDDAT(29),OMG3  )        MXLE0025
     1                 ,(INDDAT(12),KTAU  ) ,(INDDAT(13),ONTIME)        MXLE0026
     2                 ,(INDDAT( 8),MTYPE )                             MXLE0027
C                                                                       MXLE0028
      COMMON            /ESTCOM/CEST(804)                               MXLE0029
      DOUBLE PRECISION   DELDAN(2) ,SE(14,20)                           MXLE0030
      EQUIVALENCE       (CEST( 97),DELDAN) ,(CEST( 61),EFEDAN)          MXLE0031
     1                 ,(CEST(245),SE    )                              MXLE0032
      COMMON            /DATCOM/CDAT(299)                               MXLE0033
      DOUBLE PRECISION   BIAS(2) ,FTR ,SPDLT ,STA(10) ,TAU              MXLE0034
      EQUIVALENCE               (CDAT(133),FTR   ) ,(CDAT(139),STA   )  MXLE0035
     1                         ,(CDAT(135),OMEGA ) ,(CDAT(159),TAU   )  MXLE0036
     2    ,(CDAT(  1),BIAS  ) ,(CDAT(137),SPDLT ) ,(CDAT(233),TT2BO )  MXLE0037
C                                                                       MXLE0038
      COMMON            /DFMCOM/IFM(14),RFM(6,12)                       MXLE0039
     1                         ,DFM (4),BFM (577),SNT(2,102)            MXLE0040
      DOUBLE PRECISION   BFM,DFM,RFM                                    MXLE0041
C                                                                       MXLE0042
      COMMON            /MLECOM/CMLE(1070)                              MXLE0043
      DOUBLE PRECISION   AMU      ,EDEL  ,ETIMR1    ,STBIAS (4),UTIMR   MXLE0044
     1                  ,COEF(2,4),EDHAT ,ETIMV1    ,STIMR     ,UTIMR1  MXLE0045
     2                  ,CTAU     ,EDHATX,HY     (6),STIMR1    ,X1 (6)  MXLE0046
     3                  ,DATAT (4),EHAT  ,OBIAS  (4),TB12C(3,3),XA1(6) MXLE0047
     4                  ,DRA      ,EHATL ,PI   (6,6),TD2C (3,3),XM (6) MXLE0048
     5                  ,E        ,EHATX ,PX12M(6,6),TEST  (20)        MXLE0049
     6                  ,EBAR     ,ELAST ,QI     (4),TMEAN             MXLE0050
      LOGICAL            LDATA(4) ,LMEAS(4) ,LMLE ,LRESDL               MXLE0051
      DIMENSION          DATA(5,100) ,LBM(12) ,NROT(4)                  MXLE0052
     1                              ,LBS(12) ,NYR (4)                  MXLE0053
      EQUIVALENCE               (CMLE( 55),QI    ) ,(CMLE(135),PX12M )  MXLE0054
     1                         ,(CMLE(531),LBM   ) ,(CMLE( 27),STBIAS) MXLE0055
     2    ,(CMLE(363),AMU   ) ,(CMLE(543),LBS   ) ,(CMLE( 13),STIMR )  MXLE0056
     3    ,(CMLE(347),COEF  ) ,(CMLE(401),LDATA ) ,(CMLE(  5),STIMR1)  MXLE0057
     4    ,(CMLE(365),CTAU  ) ,(CMLE(397),LMEAS ) ,(CMLE( 81),TB12C )  MXLE0058
     5    ,(CMLE(570),DATA  ) ,(CMLE(406),LMLE  ) ,(CMLE( 63),TD2C  )  MXLE0059
     6    ,(CMLE( 39),DATAT ) ,(CMLE(407),LRESDL) ,(CMLE(307),TEST  )  MXLE0060
     7    ,(CMLE(367),DRA   ) ,(CMLE(432),NPTSTT) ,(CMLE(  3),TMEAN )  MXLE0061
     8    ,(CMLE(  9),ETIMR1) ,(CMLE(423),NROT  ) ,(CMLE( 15),UTIMR )  MXLE0062
     9    ,(CMLE( 11),ETIMV1) ,(CMLE(431),NSTATE) ,(CMLE(  7),UTIMR1)  MXLE0063
     1    ,(CMLE(295),HY    ) ,(CMLE(427),NYR   ) ,(CMLE( 99),X1    )  MXLE0064
     2    ,(CMLE(433),IQUAL ) ,(CMLE( 31),OBIAS ) ,(CMLE(111),XA1   )  MXLE0065
     3    ,(CMLE(434),ITIME ) ,(CMLE(223),PI    ) ,(CMLE(123),XM    )  MXLE0066
      EQUIVALENCE              (TEST( 6),EBAR  ) ,(TEST( 8),EHAT  )   MXLE0067
     1                        ,(TEST( 7),EDEL  ) ,(TEST(14),EHATL )   MXLE0068
     2                        ,(TEST( 9),EDHAT ) ,(TEST(17),EHATX )   MXLE0069
     3    ,(TEST( 5),E     ) ,(TEST(18),EDHATX) ,(TEST(11),ELAST )    MXLE0070
C                                                                       MXLE0071
      COMMON             SAVE(120),D(21)                               MXLE0072
      DOUBLE PRECISION   D                                             MXLE0073
C                                                                       MXLE0074
```

```
      DOUBLE PRECISION   ALPHA(2) ,DXM(6) ,GHAI   ,XMHAT (6) ,YR(4)      MXLE0075
     1                  ,BETA     ,EPSBT  ,OMEGAX ,XMLAST(6)             MXLE0076
     2                  ,DRGE     ,G  (6) ,P(6,6) ,XXHAT (6)             MXLE0077
      DIMENSION          LBEST(6) ,LBG  (7) ,LBSC(7) ,LBSXM(2)           MXLE0078
     1                  ,LBETA(5) ,LBORB(9) ,LBSS(3) ,MD   (3)           MXLE0079
C                                                                        MXLE0080
      DATA  LBEST/6HALL CO,6HORDINA,6HTES   ,6HRANGE ,6HONLY  ,6H      /MXLE0081
      DATA  LBETA/6HFIXED ,6HAT    ,6HVARIAB,6HLE    ,6HDOWN  /          MXLE0082
      DATA  LBG  /6HEXTERN,6HALLY  ,6HEACH T,6HRIAL  ,6HFIRST ,6HTRIAL  MXLE0083
     1           ,6HONLY  /                                              MXLE0084
      DATA  LBORB/6HSMA   ,6HECC   ,6HINC   ,6HLAN   ,6HAPF   ,6HTHE    MXLE0085
     1           ,6HSLR   ,6HHEV   ,6HRCA   /                            MXLE0086
      DATA  LBSC /6HEXTERN,6HALLY  ,6HEQUAL ,6HTO 1.0,6HTO NOR,6HMALIZE MXLE0087
     1           ,6H XM   /                                              MXLE0088
      DATA  LBSS /6HKM    ,6HRAD   ,6HRAD   /                            MXLE0089
      DATA  LBSXM/6HOF SCA,6HLED XM/                                     MXLE0090
      DATA  MD   / 1,3,-1 /                                              MXLE0091
C                                                                        MXLE0092
  600 FORMAT(45H1 T  OUTPUT FROM MAXIMUM LIKELIHOOD ESTIMATOR/3H  R/3H  MXLE0093
     1I/3H  A/3H  L)                                                     MXLE0094
  601 FORMAT(///1X,I2,16H  ESTIMATION OF ,3A6//5X,12HANCHOR TIMES,10X,14MXLE0095
     1HSTATION TIME =,D24.16,8X,14HVEHICLE TIME =,D24.16)                MXLE0096
  602 FORMAT(18H0    VEHICLE STATE//8X,19HM-FRAME COORDINATES,48X,5HRATEMXLE0097
     1S,3(/18X,2A6,D28.16,1X,A6,7X,D23.16,1X,A3,4H/SEC))                 MXLE0098
  603 FORMAT(/8X,31HCARTESIAN COORDINATES (C-FRAME)/20X,18HEARTH CENTEREMXLE0099
     1D (X),7X,A6,14H CENTERED (XA),5X,A6,16H TO EARTH VECTOR)           MXLE0100
  604 FORMAT(15X,3D25.16)                                                MXLE0101
  605 FORMAT(/8X,52HORBITAL ELEMENTS IN KILOMETERS AND DEGREES (C-FRAME)MXLE0102
     1,3(/12X,3(6X,A3,D25.16)))                                          MXLE0103
  606 FORMAT(1H0,4X,20HCONVERGENCE CONTROLS/8X,33HMAXIMUM NUMBER OF TRIAMXLE0104
     1LS (MTRY) =,I4/8X,55HCONVERGENCE LEVEL FOR MEAN WGT SQ OF RESIDUALMXLE0105
     2S (EPSBAR),17X,1H=,E16.8/8X,73HFRACTIONAL LEVEL FOR FRACTIONAL CHAMXLE0106
     3NGE IN WGT SQ OF RESIDUALS (EPSDEL)  =,E16.8)                      MXLE0107
  607 FORMAT(24H0    CONSTRAINT CONTROLS/8X,25HSCALING FACTOR (BETA) IS MXLE0108
     1,A6,A2,A6,4HONLY)                                                  MXLE0109
  608 FORMAT(11X,25HINITIAL VALUE  (B0)     =,E16.8)                     MXLE0110
  609 FORMAT(11X,25HDECREASE VALUE (BDOWN)  =,E16.8,6X,44HMINIMUM FRACTIMXLE0111
     1ONAL CORRECTION     (ALOWR)  =,E16.8)                              MXLE0112
  610 FORMAT(11X,25HINCREASE VALUE (BUP)    =,E16.8,6X,44HMAXIMUM ALPHA MXLE0113
     1FOR INCREASING BETA (AUPPR)  =,E16.8)                              MXLE0114
  611 FORMAT(1H0,7X,38HUNSCALED CONSTRAINT VECTOR (G) IS SET ,3A6)       MXLE0115
  612 FORMAT(20X,3D26.16)                                                MXLE0116
  613 FORMAT(11X,22HPOSITION CONSTRAINT IS,E16.8,19H  OF DISTANCE FROM ,MXLE0117
     1A6/11X,22HPOSITION CONSTRAINT IS,E16.8,13H  OF VELOCITY)           MXLE0118
  615 FORMAT(43H0    M-FRAME SCALING VECTOR (SCALE) IS SET ,3A6)         MXLE0119
  616 FORMAT(/5X,20H  CONVERGED ON TRIAL,I3)                             MXLE0120
  617 FORMAT(/5X,18HCOVARIANCE MATRIX ,2A6)                              MXLE0121
  618 FORMAT(10X,3(14X,2A6))                                             MXLE0122
  619 FORMAT(8X,2A6,3(D24.16,2X))                                        MXLE0123
  620 FORMAT(/5X,23HSUMMARY OF RESIDUAL FIT/24X,11HMEAN SQUARE,15X,13HNUMXLE0124
     1MBER OF PTS)                                                       MXLE0125
  621 FORMAT(8X,2A6,D24.16,I9)                                           MXLE0126
  622 FORMAT(62X,5HVALUE,18X,17HCONVERGENCE LEVEL/8X,27HTOTAL MEAN WGT SMXLE0127
     1QUARE(EBAR),23X,1H=,D24.16,E18.8/8X,51HFRACTIONAL IMPROVEMENT IN TMXLE0128
     2OTAL MEAN SQUARE(EDEL) =,D24.16,E18.8)                             MXLE0129
  623 FORMAT(1H1,9X,15HRESIDUAL OUTPUT//13X,4HTIME,13X,4(2A6,5X))        MXLE0130
  631 FORMAT(1H0,I2,26H  DIFFERENTIAL CORRECTIONS)                       MXLE0131
  632 FORMAT(/20X,18HSCALED EST (XXHAT),6X,7H-SCALE-,18X,18HUNSCALED CONMXLE0132
     1ST (G))                                                            MXLE0133
  633 FORMAT(5X,2A6,D23.16,2D25.16)                                      MXLE0134
  634 FORMAT(/20X,16HESTIMATE (XMHAT),8X,21HCONST VECTOR (BETA*G),4X,21HMXLE0135
     1DIFF CORRECTION (DXM))                                             MXLE0136
  635 FORMAT(/5X,31HINFORMATION MATRIX OF SCALED XM)                     MXLE0137
  636 FORMAT(1H0,I2,17H  TEST PARAMETERS,18X,10HLAST TRIAL,6X,7HCURRENT,MXLE0138
     19X,9HPREDICTED,7X,9HPREDICTED,7X,13HUNCONSTRAINED/70X,11HON LAST TMXLE0139
     2RY,5X,12HFOR NEXT TRY,4X,9HPREDICTED/5X,29HSUM OF WGT SQ OF RESD(EMXLE0140
     3)    =,5E16.8/5X,29HMEAN WGT SQ OF RESD(EBAR)   =,2E16.8/5X,29HFRAMXLE0141
     4CTIONAL IMPRV IN E(EDEL) =,5E16.8)                                 MXLE0142
  637 FORMAT(1H0,I2,21X,4H-HY-,22X,19HUNCONSTRAINED HYHAT,7X,17HCONSTRAIMXLE0143
     1NED HYHAT)                                                         MXLE0144
  638 FORMAT(1H0,I2,19H  CONVERGENCE TESTS,24X,10HTEST LEVEL/5X,11HEBAR MXLE0145
     1      =,D24.16,E18.8/5X,11HEDEL       =,D24.16,E18.8/5X,11HALPHA  MXLE0146
     2 =,D24.16)                                                         MXLE0147
  639 FORMAT(5X,4HBETA,6X,1H=,D24.16)                                    MXLE0148
  642 FORMAT(/5X,4HRANK,6X,1H=,I24)                                      MXLE0149
```

```
  690 FORMAT(/38H     * MAXIMUM NUMBER OF TRIALS REACHED)                MXLE0150
  691 FORMAT(/24H     * FAILED TO CONVERGE)                              MXLE0151
  692 FORMAT(1H0,I2,37H *PROCESS DIVERGING, EDEL IS POSITIVE)            MXLE0152
  693 FORMAT(1H0,I2,18H  INCREASE BETA TO,E16.8,20H, PROCESS CONVERGING)MXLE0153
  694 FORMAT(1H0,I2,37H *MAXIMUM FRACTIONAL DIFF CORRECTION(,E15.8,11H).MXLE0154
     1LT.ALCWR(,E15.8,1H))                                               MXLE0155
  695 FORMAT(5X,14HREDUCE BETA TO,E16.8,47H AND MAKE NEW TRIAL FROM LASTMXLE0156
     1 ACCEPTED ESTIMATE)                                                MXLE0157
C                                                                        MXLE0158
C**   CONVERT POLYNOMIAL COEFFICIENTS TO MEASUREMENT COORDINATES         MXLE0159
C                                                                        MXLE0160
C     SET UP ANCHOR POINT TIME                                           MXLE0161
    1 CONTINUE                                                           MXLE0162
      LMLE = .FALSE.                                                     MXLE0163
      IFM(ICB) = 2                                                       MXLE0164
      STIMR1 = TMEAN+ONTIME                                              MXLE0165
      UTIMR1 = STIMR1+STBIAS(1)+STBIAS(2)*STIMR1                         MXLE0166
      ETIMR1 = UTIMR1+DELDAN(1)+DELDAN(2)*UTIMR1                         MXLE0167
C                                                                        MXLE0168
C     EARTH ORIENTATION (SEE GTR2BD)                                     MXLE0169
      CALL DPFMRS (ETIMR1,EFEDAN,ICB,IERR,ETAPE)                         MXLE0170
      IF (IERR.NE.0)      GO TO 998                                      MXLE0171
      CALL DEQTR  (ETIMR1,D)                                             MXLE0172
      CALL DGTSN  (D(13),0,D(2),D(1),D(4))                               MXLE0173
      D(1) = D(3)+DFM(2)                                                 MXLE0174
      D(2) = DFM(1)                                                      MXLE0175
      CALL DGTRN  (D(4),MD,D,3)                                          MXLE0176
      CALL DMVTRN (D(13),D(4),TD2C,2,3)                                  MXLE0177
      DRA = D(7)                                                         MXLE0178
      CALL DEHA   (UTIMR1,DRA,GHA1,OMEGA)                                MXLE0179
      OMEGAX = OMEGA                                                     MXLE0180
      D(1) = DCOS(GHA1)                                                  MXLE0181
      D(2) = DSIN(GHA1)                                                  MXLE0182
      DO 2 I=1,3                                                         MXLE0183
      TB12C(I,1) = D(1)*TD2C(I,1)+D(2)*TD2C(I,2)                         MXLE0184
      TB12C(I,2) = D(1)*TD2C(I,2)-D(2)*TD2C(I,1)                         MXLE0185
      TB12C(I,3) = TD2C(I,3)                                             MXLE0186
    2 CONTINUE                                                           MXLE0187
C                                                                        MXLE0188
C     TRANSFER COEFFICIENTS TO MEASUREMENT COORDINATES                   MXLE0189
   10 CONTINUE                                                           MXLE0190
      XM(1) = COEF(1,3)                                                  MXLE0191
      XM(2) = COEF(1,1)                                                  MXLE0192
      XM(3) = COEF(1,2)                                                  MXLE0193
      XM(4) = COEF(2,3)                                                  MXLE0194
      XM(5) = COEF(2,1)                                                  MXLE0195
      XM(6) = COEF(2,2)                                                  MXLE0196
      NSTATE = 6                                                         MXLE0197
      IF (MTYPE.EQ.1)     GO TO 22                                       MXLE0198
C                                                                        MXLE0199
C     C-BAND IS SET UP                                                   MXLE0200
C     CONTINUE FOR OTHERS                                                MXLE0201
      IF (IQUAL.EQ.2)     GO TO 15                                       MXLE0202
C                                                                        MXLE0203
C     RANGE DATA IS AVAILABLE                                            MXLE0204
      D(1) = 0.5D0                                                       MXLE0205
      IF (MTYPE.EQ.2)     D(1) = D(1)*SPDLT                              MXLE0206
      DRGE = D(1)*DRNGE                                                  MXLE0207
      XM(1) = D(1)*XM(1)                                                 MXLE0208
      XM(4) = D(1)*XM(4)                                                 MXLE0209
      LRESDL = .TRUE.                                                    MXLE0210
      NSTATE = 0                                                         MXLE0211
C                                                                        MXLE0212
C     MINIMIZE RESIDUALS VS RANGE AMBIGUITY                              MXLE0213
      ITP = NSTTR                                                        MXLE0214
      NSTTR = 0                                                          MXLE0215
      ELAST = 1.D+20                                                     MXLE0216
      IAM = 1                                                            MXLE0217
      GO TO 35                                                           MXLE0218
   11 IF (E.GT.ELAST)     GO TO 12                                       MXLE0219
      ELAST = E                                                          MXLE0220
      IAM = IAM+1                                                        MXLE0221
      XM(1) = XM(1)+DRGE                                                 MXLE0222
      IF (IAM.LE.MAXAMB) GO TO 35                                        MXLE0223
   12 CONTINUE                                                           MXLE0224
```

```
      XM(1) = XM(1)-DRGE                                                MXLE0225
      NSTATE = 6                                                        MXLE0226
      NSTTR = ITP                                                       MXLE0227
      GO TO 22                                                          MXLE0228
C                                                                       MXLE0229
C     RANGE DATA NOT AVAILABLE                                          MXLE0230
C     ESTIMATE RANGE FIRST                                              MXLE0231
   15 CONTINUE                                                          MXLE0232
      XM(1) = 25.D+3                                                    MXLE0233
      IF (ICB.NE.3)       XM(1) = DNORM(RFM(1,3))                       MXLE0234
      GO TO (999,18,17,16) ,MTYPE                                       MXLE0235
C     DSIF                                                              MXLE0236
   16 XM(2) = DATAN2 (STA(2),STA(1))+GHA1-XM(2)                         MXLE0237
      XM(5) =-XM(5)                                                     MXLE0238
      OMEGAX = 0.D0                                                     MXLE0239
C     USBS                                                              MXLE0240
   17 D(2) = BIAS(2)                                                    MXLE0241
      GO TO 19                                                          MXLE0242
C     STADAN/VHF                                                        MXLE0243
   18 D(2) =-1.D0                                                       MXLE0244
   19 CONTINUE                                                          MXLE0245
      D(1) = COEF(1,4)/TAU                                              MXLE0246
      IF (KTAU.EQ.0)      D(1) = TAU/COEF(1,4)                          MXLE0247
      D(1) =-(BIAS(1)-D(1))/(2.D0*FTR*D(2))                             MXLE0248
      XM(4) = SPDLT*D(1)/(1.D0+D(1))                                    MXLE0249
      NSTATE = 1                                                        MXLE0250
      GO TO 22                                                          MXLE0251
C                                                                       MXLE0252
C**   OUTPUT HEADINGS AND CONTROL DATA                                  MXLE0253
C                                                                       MXLE0254
C     RESIDUAL OUTPUT ONLY                                              MXLE0255
   20 CONTINUE                                                          MXLE0256
      LRESDL = .TRUE.                                                   MXLE0257
      WRITE (6,623)      (LBM(I),LBM(I+4),I=1,4)                        MXLE0258
      GO TO 35                                                          MXLE0259
C                                                                       MXLE0260
C     MAXIMUM LIKELIHOOD ESTIMATION                                     MXLE0261
   21 NSTATE = 6                                                        MXLE0262
   22 CONTINUE                                                          MXLE0263
      LRESDL = .FALSE.                                                  MXLE0264
      IF (NSTTM.EQ.0)     GO TO 30                                      MXLE0265
      WRITE (6,600)                                                     MXLE0266
      IF (NSTTM.LT.4)     GO TO 30                                      MXLE0267
      WRITE (6,606)       MTRY,EPSBAR,EPSDEL                            MXLE0268
      I = 1                                                             MXLE0269
      IF (CNTL.NE.0.)     I=3                                           MXLE0270
      J = I+1                                                           MXLE0271
      IF (CNTL.LT.0.)     J=5                                           MXLE0272
      WRITE (6,607)      (LBETA(K),K=I,J)                               MXLE0273
      WRITE (6,608)       B0                                            MXLE0274
      IF (CNTL.EQ.0.)     GO TO 23                                      MXLE0275
      WRITE (6,609)       BDOWN,ALOWR                                   MXLE0276
      IF (CNTL.LE.0.)     GO TO 23                                      MXLE0277
      WRITE (6,610)       BUP,AUPPR                                     MXLE0278
   23 CONTINUE                                                          MXLE0279
      I = 1                                                             MXLE0280
      IF (CNST.NE.0.)     I=3                                           MXLE0281
      J = I+1                                                           MXLE0282
      IF (CNST.GE.0.)     GO TO 24                                      MXLE0283
      I = 5                                                             MXLE0284
      J = 7                                                             MXLE0285
   24 WRITE (6,611)      (LBG(K),K=I,J)                                 MXLE0286
      IF (CNST.NE.0.)     GO TO 25                                      MXLE0287
      WRITE (6,612)      (CNST(I),I=2,7)                                MXLE0288
      GO TO 26                                                          MXLE0289
   25 WRITE (6,613)       RCNST,CBODY(1,ICB),VCNST                      MXLE0290
   26 CONTINUE                                                          MXLE0291
      I = 3                                                             MXLE0292
      IF (KSCALE.EQ.0)    GO TO 27                                      MXLE0293
      I = 1                                                             MXLE0294
      IF (KSCALE.LT.0)    GO TO 27                                      MXLE0295
      I = 5                                                             MXLE0296
      J = 7                                                             MXLE0297
      GO TO 28                                                          MXLE0298
   27 J = I+1                                                           MXLE0299
```

```
   28 WRITE (6,615)      (LBSC(K),K=I,J)                                MXLE0300
      IF (KSCALE.GE.0)    GO TO 30                                      MXLE0301
      WRITE (6,612)       SCALE                                         MXLE0302
C                                                                       MXLE0303
C**   INITIALIZE                                                        MXLE0304
C                                                                       MXLE0305
C     HERE FOR M.L.E.                                                   MXLE0306
   30 CONTINUE                                                          MXLE0307
      DO 31 I=1,6                                                       MXLE0308
      DXM(I) = 0.D0                                                     MXLE0309
   31 TEST(I+10) = 9.999999999999999D+21                                MXLE0310
      KSS = 2                                                           MXLE0311
      IF (NSTATE.EQ.1)    KSS=0                                         MXLE0312
      NTRY = 0                                                          MXLE0313
      DO 32 I=1,36                                                      MXLE0314
   32 PI(I,1) = 0.D0                                                    MXLE0315
      EPSBT = 0.                                                        MXLE0316
      DO 33 I=1,4                                                       MXLE0317
   33 IF (LMEAS(I))       EPSBT=EPSBT+EPSBAR                            MXLE0318
      BETA = B0                                                         MXLE0319
C                                                                       MXLE0320
C     HERE FOR RESIDUAL COMPUTATION                                     MXLE0321
   35 CONTINUE                                                          MXLE0322
                                                                        MXLE0323
C                                                                       MXLE0324
C**   M.L.E. ITERATION LOOP STARTS HERE                                 MXLE0325
C                                                                       MXLE0326
C     ANCHOR POINT                                                      MXLE0327
  100 NTRY = NTRY+1                                                     MXLE0328
      ETIMV1 = ETIMR1-XM(1)/SPDLT                                       MXLE0329
      IF (MTYPE.EQ.4)     GO TO 101                                     MXLE0330
      CALL DMVTRN (TB12C,TT2BO,TD2C,1,3)                                MXLE0331
  101 CALL DMVTRN (TB12C,STA,D(13),1,1)                                 MXLE0332
      CALL MEAS2X (X1,PX12M,XM,NROT,TD2C,D(13),TB12C(1,3),OMEGAX)       MXLE0333
      CALL DPFMRS (ETIMV1,EFEDAN,ICB,IERR,ETAPE)                        MXLE0334
      IF (IERR.NE.0)      GO TO 998                                     MXLE0335
C                                                                       MXLE0336
C     CLEAR SUMMATION STORAGE                                           MXLE0337
      DO 106 I=1,4                                                      MXLE0338
  106 NYR(I) = 0                                                        MXLE0339
      DO 102 I=1,6                                                      MXLE0340
      HY(I) = 0.D0                                                      MXLE0341
      TEST(I) = 0.D0                                                    MXLE0342
  102 XA1(I) = X1(I)+RFM(I,3)                                           MXLE0343
      CALL STEPDI (ETIMV1,XA1,AMU)                                      MXLE0344
C                                                                       MXLE0345
C     OUTPUT ANCHOR POINT                                               MXLE0346
      IF (LRESDL)         GO TO 110                                     MXLE0347
      IF (NSTTM.LT.2)     GO TO 110                                     MXLE0348
      IF (NSTTM.EQ.2.AND.NTRY.NE.1) GO TO 110                           MXLE0349
  103 I = 1                                                             MXLE0350
      IF (NSTATE.NE.6)    I = 4                                         MXLE0351
      J = I+2                                                           MXLE0352
      WRITE (6,601)       NTRY,(LBEST(K),K=I,J),STIMR1,ETIMV1           MXLE0353
      WRITE (6,602)      (LBS(I),LBS(I+6),XM(I),LBSS(I),                MXLE0354
     1                    XM(I+3),LBSS(I),I=1,3)                        MXLE0355
      IF (NSTTM.LT.3)     GO TO 105                                     MXLE0356
      CALL X2ORBD (XA1,D,AMU)                                           MXLE0357
      DO 104 I=3,6                                                      MXLE0358
  104 D(I) = D(I)*RTD                                                   MXLE0359
      WRITE (6,605)      (LBORB(I),D(I),I=1,9)                          MXLE0360
  105 WRITE (6,603)       CBODY(1,ICB),CBODY(1,ICB)                     MXLE0361
      WRITE (6,604)      (X1(I),XA1(I),RFM(I,3),I=1,6)                  MXLE0362
      IF (LMLE)      GO TO 242                                          MXLE0363
C                                                                       MXLE0364
C     SET UP SCALING                                                    MXLE0365
  110 IF (LRESDL)    GO TO 120                                          MXLE0366
      IF (KSCALE)    115,111,113                                        MXLE0367
  111 DO 112 I=1,6                                                      MXLE0368
  112 SCALE(I) = 1.D0                                                   MXLE0369
      GO TO 115                                                         MXLE0370
  113 DO 114 J=1,6                                                      MXLE0371
      SCALE(J) = DABS(XM(J))                                            MXLE0372
      DO 114 I=1,6                                                      MXLE0373
  114 PX12M(I,J) = SCALE(J)*PX12M(I,J)                                  MXLE0374
```

```
  115 CONTINUE                                                          MXLE0375
      IF (CNST.LT.0.)     GO TO 117                                     MXLE0376
      IF (NTRY.NE.1)      GO TO 120                                     MXLE0377
      IF (CNST.NE.0.)     GO TO 117                                     MXLE0378
      DO 116 I=1,6                                                      MXLE0379
  116 G(I) = CNST(I+1)                                                  MXLE0380
      GO TO 120                                                         MXLE0381
  117 CONTINUE                                                          MXLE0382
      YR(1) = RCNST                                                     MXLE0383
      YR(2) = VCNST                                                     MXLE0384
      IF (ABS(CNST).EQ.2.) GO TO 118                                    MXLE0385
      YR(1) = YR(1)*DNORM(XA1)                                          MXLE0386
      YR(2) = YR(2)*DNORM(XA1(4))                                       MXLE0387
  118 CONTINUE                                                          MXLE0388
      G(1) = 1.D0                                                       MXLE0389
      G(3) = 1.D0/XM(1)                                                 MXLE0390
      D(1) = DABS(DCOS(XM(3)))                                          MXLE0391
      IF (D(1).LT.1.D-20) D(1) = 1.D-20                                 MXLE0392
      G(2) = G(3)/D(1)                                                  MXLE0393
      DO 119 I=1,3                                                      MXLE0394
      G(I+3) = G(I)*YR(2)                                               MXLE0395
  119 G(I)   = G(I)*YR(1)                                               MXLE0396
C                                                                       MXLE0397
C**   COMPUTE RESIDUALS AND INFORMATION MATRIX                          MXLE0398
C                                                                       MXLE0399
  120 CONTINUE                                                          MXLE0400
      DO 123 ITIME=1,NPTSTT                                             MXLE0401
      DO 121 I=1,4                                                      MXLE0402
      LDATA(I) = LMEAS(I)                                               MXLE0403
      DATAT(I) = DATA(I+1,ITIME)                                        MXLE0404
  121 IF (DATAT(I).LT.0.) LDATA(I) = .FALSE.                            MXLE0405
      STIMR = CNTIME+DATA(1,ITIME)                                      MXLE0406
      UTIMR = STIMR+STBIAS(1)+STBIAS(2)*STIMR                           MXLE0407
      IF (KTAU.NE.0)      GO TO 122                                     MXLE0408
      TAU = DATAT(4)                                                    MXLE0409
      DATAT(4) = CTAU                                                   MXLE0410
      BIAS(1)  = OMG3+SE(10,INDSTA)/TAU                                 MXLE0411
  122 CONTINUE                                                          MXLE0412
      CALL STTIME                                                       MXLE0413
  123 IF (IERR.NE.0)      GO TO 999                                     MXLE0414
C                                                                       MXLE0415
C**   COMPUTE DIFFERENTIAL CORRECTION DXM AND ESTIMATE XMHAT            MXLE0416
C                                                                       MXLE0417
  140 IF (LRESDL)         GO TO 160                                     MXLE0418
      DO 141 I=1,36                                                     MXLE0419
  141 P(I,1) = PI(I,1)                                                  MXLE0420
      NRANK = NSTATE                                                    MXLE0421
      CALL PSEUDO (P,NRANK,6,EPSEUD)                                    MXLE0422
      CALL DMPLY  (P,HY,XXHAT,NSTATE,NSTATE,1,6,6,6,0)                  MXLE0423
      ALPHA = .999D+20                                                  MXLE0424
      DO 142 I=1,NSTATE                                                 MXLE0425
      D(I+1) = G(I)*BETA                                                MXLE0426
      XMHAT(I) = XXHAT(I)*SCALE(I)                                      MXLE0427
      D(1) = DABS(XMHAT(I))                                             MXLE0428
      IF (D.EQ.0.D0)      GO TO 142                                     MXLE0429
      D(1) = D(I+1)/D(1)                                                MXLE0430
      IF (D.LT.ALPHA)     ALPHA = D                                     MXLE0431
  142 CONTINUE                                                          MXLE0432
      ALPHA(2) = ALPHA                                                  MXLE0433
      IF (ALPHA(2).GT.1.D0) ALPHA(2) = 1.D0                             MXLE0434
      DO 143 I=1,NSTATE                                                 MXLE0435
  143 DXM(I) = XMHAT(I)*ALPHA(2)                                        MXLE0436
C                                                                       MXLE0437
C**   COMPUTE TEST PARAMETERS                                           MXLE0438
C                                                                       MXLE0439
  160 CONTINUE                                                          MXLE0440
      DO 161 I=1,4                                                      MXLE0441
      IF (.NOT.LMEAS(I)) GO TO 161                                      MXLE0442
      D(1) = TEST(I)*QI(I)                                              MXLE0443
      E = E+D(1)                                                        MXLE0444
      D(2) = NYR(I)                                                     MXLE0445
      TEST(I) = TEST(I)/D(2)                                            MXLE0446
      EBAR = EBAR+D(1)/D(2)                                             MXLE0447
  161 CONTINUE                                                          MXLE0448
      IF (.NOT.LRESDL)    GO TO 162                                     MXLE0449
```

```
      IF (NSTTR.NE.0)     GO TO 244                                   MXLE0450
      IF (NSTATE.EQ.0)    GO TO 11                                    MXLE0451
      GO TO 999                                                       MXLE0452
  162 CONTINUE                                                        MXLE0453
      EDEL = (E-ELAST)/E                                              MXLE0454
      CALL DMPLY  (PI,XXHAT,D,NSTATE,NSTATE,1,6,6,6,0)                MXLE0455
      CALL DMPLY  (XXHAT,D,D(7),1,NSTATE,1,6,6,6,1)                   MXLE0456
      CALL DMPLY  (XXHAT,HY,D(8),1,NSTATE,1,6,6,6,1)                  MXLE0457
      D( 9) = D(7)-2.D0*D(8)                                          MXLE0458
      D(10) = (D(7)*ALPHA(2)-2.D0*D(8))*ALPHA(2)                      MXLE0459
      EHATX  = E+D( 9)                                                MXLE0460
      EHAT   = E+D(10)                                                MXLE0461
      EDHATX = D( 9)/EHATX                                            MXLE0462
      EDHAT  = D(10)/EHAT                                             MXLE0463
C                                                                     MXLE0464
C**   OUTPUT TRIAL SUMMARY                                            MXLE0465
C                                                                     MXLE0466
  180 IF (NSTTM.LT.6)     GO TO 184                                   MXLE0467
      WRITE (6,631)       NTRY                                        MXLE0468
      IF (NSTTM.LT.8)     GO TO 181                                   MXLE0469
      WRITE (6,632)                                                   MXLE0470
      WRITE (6,633)      (LBS(I),LBS(I+6),XXHAT(I),SCALE(I),G(I)      MXLE0471
     1                   ,I=1,NSTATE)                                 MXLE0472
  181 WRITE (6,634)                                                   MXLE0473
      DO 182 I=1,NSTATE                                               MXLE0474
      D(7) = BETA*G(I)                                                MXLE0475
  182 WRITE (6,633)       LBS(I),LBS(I+6),XMHAT(I),D(7),DXM(I)        MXLE0476
      WRITE (6,642)       NRANK                                       MXLE0477
      WRITE (6,639)       BETA                                        MXLE0478
  184 CONTINUE                                                        MXLE0479
      WRITE (6,638)       NTRY,EBAR,EPSBT,EDEL,EPSDEL,ALPHA(1)        MXLE0480
      IF (NSTTM.LT.5)     GO TO 200                                   MXLE0481
      WRITE (6,636)       NTRY,ELAST,E,EHATL,EHAT,EHATX               MXLE0482
     1                        ,TEST(12),EBAR                          MXLE0483
     2                        ,TEST(13),EDEL,TEST(15),EDHAT,EDHATX    MXLE0484
      IF (NSTTM.LT.7)     GO TO 200                                   MXLE0485
      WRITE (6,637)       NTRY                                        MXLE0486
      DO 185 I=1,NSTATE                                               MXLE0487
      D(7) = D(I)*ALPHA(2)                                            MXLE0488
  185 WRITE (6,619)       LBS(I),LBS(I+6),HY(I),D(I),D(7)             MXLE0489
      IF (NSTTM.LT.9)     GO TO 200                                   MXLE0490
      WRITE (6,635)                                                   MXLE0491
      ASSIGN 252 TO N1                                                MXLE0492
      ASSIGN 186 TO N2                                                MXLE0493
      GO TO 250                                                       MXLE0494
  186 IF (NSTTM.LT.10)    GO TO 200                                   MXLE0495
      WRITE (6,617)       LBSXM                                       MXLE0496
      ASSIGN 251 TO N1                                                MXLE0497
      ASSIGN 200 TO N2                                                MXLE0498
      GO TO 250                                                       MXLE0499
C                                                                     MXLE0500
C**   TEST FOR CONVERGENCE                                            MXLE0501
C                                                                     MXLE0502
  200 CONTINUE                                                        MXLE0503
      IF (EDEL.GT.0.D0)   GO TO 280                                   MXLE0504
      IF (EBAR.LT.EPSBT)  GO TO 220                                   MXLE0505
      IF (EPSDEL+EDEL.GT.0.D0.AND.ALPHA.GT.0.99D0) GO TO 220          MXLE0506
C                                                                     MXLE0507
C     DID NOT CONVERGE ON THIS TRY                                    MXLE0508
      IF (NTRY.GE.MTRY)   GO TO 900                                   MXLE0509
      IF (CNTL.LE.0.)     GO TO 210                                   MXLE0510
      IF (ALPHA.GT.AUPPR)GO TO 210                                    MXLE0511
  201 BETA = BETA*BUP                                                 MXLE0512
      IF (NSTTM.LT.2)     GO TO 210                                   MXLE0513
      WRITE (6,693)       NTRY,BETA                                   MXLE0514
C                                                                     MXLE0515
C     SET UP ANOTHER ITERATION                                        MXLE0516
  210 CONTINUE                                                        MXLE0517
      DO 211 I=1,36                                                   MXLE0518
  211 PI(I,1) = 0.D0                                                  MXLE0519
      DO 212 I=1,6                                                    MXLE0520
      XMLAST(I) = XM(I)                                               MXLE0521
  212 XM(I) = XM(I)+DXM(I)                                            MXLE0522
      DO 213 I=1,5                                                    MXLE0523
  213 TEST(I+10) = TEST(I+4)                                          MXLE0524
```

```
      GO TC 100                                                         MXLE0525
C                                                                       MXLE0526
C     CONVERGED                                                         MXLE0527
  220 LMLE = .TRUE.                                                     MXLE0528
      DO 221 J=1,NSTATE                                                 MXLE0529
      DO 221 I=1,NSTATE                                                 MXLE0530
  221 P(I,J) = P(I,J)*SCALE(I)*SCALE(J)                                 MXLE0531
C                                                                       MXLE0532
C**   OUTPUT SUMMARY OF M.L.E.                                          MXLE0533
C                                                                       MXLE0534
  240 CONTINUE                                                          MXLE0535
      IF (NSTTM.EQ.0)     GO TO 260                                     MXLE0536
      WRITE (6,616)       NTRY                                          MXLE0537
      IF (NSTTM.EQ.1)     GO TO 103                                     MXLE0538
  242 CONTINUE                                                          MXLE0539
      IF (NSTTM.GE.3)     WRITE (6,622)  EBAR,EPSBT,EDEL,EPSDEL         MXLE0540
      IF (NSTTM.LT.5)     GO TO 246                                     MXLE0541
  244 WRITE (6,620)                                                     MXLE0542
      DO 245 I=1,4                                                      MXLE0543
      IF (.NOT.LMEAS(I)) GO TO 245                                      MXLE0544
      WRITE (6,621)       LBM(I),LBM(I+4),TEST(I),NYR(I)                MXLE0545
  245 CONTINUE                                                          MXLE0546
      IF (LRESDL)         GO TO 999                                     MXLE0547
  246 CONTINUE                                                          MXLE0548
      IF (NSTTM.LT.6)     GO TO 260                                     MXLE0549
      WRITE (6,617)                                                     MXLE0550
      ASSIGN 260 TO N2                                                  MXLE0551
      ASSIGN 251 TO N1                                                  MXLE0552
C                                                                       MXLE0553
C     CUTPUT INFORMATICN MATRIX                                         MXLE0554
  250 CONTINUE                                                          MXLE0555
      DO 253 I=1,NSTATE,3                                               MXLE0556
      II = I+KSS                                                        MXLE0557
      WRITE (6,618)      (LBS(J),LBS(J+6),J=I,II)                       MXLE0558
      DO 253 J=I,NSTATE                                                 MXLE0559
      GO TC N1, (251,252)                                               MXLE0560
  251 WRITE (6,619)       LBS(J),LBS(J+6),(P(J,K),K=I,II)               MXLE0561
      GO TC 253                                                         MXLE0562
  252 WRITE (6,619)       LBS(J),LBS(J+6),(PI(J,K),K=I,II)              MXLE0563
  253 CONTINUE                                                          MXLE0564
      GO TC N2, (186,200,260)                                           MXLE0565
C                                                                       MXLE0566
C     REPEAT FOR RESIDUALS                                              MXLE0567
  260 IF (NSTATE.EQ.1)    GO TO 21                                      MXLE0568
      IF (NSTTR.GE.1)     GO TO 20                                      MXLE0569
      GO TC 999                                                         MXLE0570
C                                                                       MXLE0571
C     PROCESS DIVERGED ON LAST TRY                                      MXLE0572
  280 CONTINUE                                                          MXLE0573
      IF (NSTTM.GE.2)     WRITE (6,692)  NTRY                           MXLE0574
      IF (CNTL.EQ.0.)     GO TO 910                                     MXLE0575
      S = 0.                                                            MXLE0576
      DO 281 I=1,NSTATE                                                 MXLE0577
  281 S = S+ABS(DXM(I)/XM(I))                                           MXLE0578
      IF (S.GE.ALOWR)     GO TO 282                                     MXLE0579
      IF (NSTTM.GE.2)     WRITE (6,694)  NTRY,S,ALOWR                   MXLE0580
      GO TC 910                                                         MXLE0581
  282 BETA = BETA*BDOWN                                                 MXLE0582
      IF (NSTTM.GE.2)     WRITE (6,695)  BETA                           MXLE0583
      DO 283 I=1,36                                                     MXLE0584
  283 PI(I,1) = 0.D0                                                    MXLE0585
      DO 284 I=1,6                                                      MXLE0586
  284 XM(I) = XMLAST(I)                                                 MXLE0587
      GO TO 100                                                         MXLE0588
C                                                                       MXLE0589
C**   PROCESS FAILED TO CONVERGE                                        MXLE0590
C                                                                       MXLE0591
  900 IF (NSTTM.GE.1)     WRITE (6,690)                                 MXLE0592
  910 IF (NSTTM.GE.1)     WRITE (6,691)                                 MXLE0593
      IF (NSTTR.GE.2)     GO TO 20                                      MXLE0594
      GO TC 999                                                         MXLE0595
C                                                                       MXLE0596
  998 IERR = IERR+15                                                    MXLE0597
  999 RETURN                                                            MXLE0598
      END
```

Subroutine: NUDATA

Purpose: To allow a convenient means whereby data may be entered into the various station arrays used by the Tracking Data Editor.

Calling Sequence: CALL NUDATA

Common storages used: /TRKCOM/

Subroutines required: None

Overlay data for the Tracking Data Editing Program consists of one or more sets of overlay cards. Each set consists of an ARRAY NAME card followed by one or more data cards. The ARRAY NAME card contains the code name of the array into which the data on the following data cards are to be put. The code name is six or fewer characters and begins in column 1. The allowable code names with a description of the related arrays are shown in Table 1.

The data cards for an array each contain up to three pairs of numbers. Each pair consists of an integer k and a value v. The integer k is a subscript indicating the relative location in the array C into which the value v is to be placed; thus C(k) = v. Three types of value data are permitted: BCD (Hollerith), integer, and double precision. The type used must be appropriate to the array code name as indicated in Table 1. The formats for the three types are:

BCD

3(I3,A6,15X)

Integer

3(I3,I2,19X)

Double Precision

3(I3,D21.16)

Thus the integers k always occupy the same locations on a data card regardless of the type of data; i.e., the integers k are in columns 1-3, 25-27, and 49-51.

If $k = 0$ and $v \neq 0$ (or blank), v will be stored in the next successive location of the array, C, following the previous entry into that array; if there were no previous entry, storage will start in C(1). If k and v are both zero (v is blank for BCD), reading of the data for this array is terminated if they are the first pair in a card; otherwise the next card is processed. If k is negative, k is set positive, v is properly stored, and reading of data for this array is terminated. Thus reading of data for an array may be terminated by a card on which k_1 and v_1 are both zero

TABLE 1

STATION DATA ARRAYS

CODE NAME	DATA TYPE	DESCRIPTION
STANAM	BCD	6-letter station name.
PAIR	BCD	6-letter name of associated transmitting station, if three way doppler.
KODSTA	Integer	Two digit decimal station ID.
NALIGN	Integer	S-Band dish size 01 = 30 ft dish 02 = 85 ft dish
FTR	Double Precision	Transmitter frequency, HZ (cps), used for doppler.
CFRAC1	Double Precision	Atmospheric Refraction constants
CFRAC2	Double Precision	
BIAS	Double Precision	Doppler fixed offset bias, HZ (cps).
RATIO	Double Precision	Spacecraft transponder retransmission ratio, for doppler (transmit/receive).

(v_1 = blank for BCD), or by a negative value of k in any of the three integer fields.

When reading of data for an array is terminated, another ARRAY NAME card is expected. The overlay process may be stopped by an ARRAY NAME card on which the array code name field has either been left blank or contains the word STOP.

All data read by NUDATA are written on the system output tape with zero values of k replaced by the relative locations actually used.

If an ARRAY NAME card with an invalid code name is encountered, an error message is printed and the program is stopped.

```
$IBFTC MC134N  M94,NODD,LIST,XR3
CMC134N   BLOCK DATA OVERLAY FOR TRACKING DATA EDITOR                   NUDA0001
      SUBROUTINE NUDATA                                                 NUDA0002
      COMMON  /TRKCOM/CTRK(700)                                         NUDA0003
      DOUBLE PRECISION  FTR(50),  C1(50),   C2(50),   BIAS(50), RETR(50)NUDA0004
      DIMENSION   STANAM(50),   KODSTA(50),   NALIGN(50),   PAIR(50)    NUDA0005
      EQUIVALENCE              (CTRK(1),STANAM),     (CTRK(51),KODSTA)  NUDA0006
     1,  (CTRK(101),NALIGN),  (CTRK(151),FTR),      (CTRK(251),C1)      NUDA0007
     2,  (CTRK(351),C2),      (CTRK(451),BIAS),     (CTRK(551),RETR)    NUDA0008
     3,  (CTRK(651),PAIR)                                               NUDA0009
C                                                                       NUDA0010
      DOUBLE PRECISION  DTEMP(3)                                        NUDA0011
      DIMENSION   IND(3),       HTEMP(6),     ITEMP(3),     ARRAY(9)    NUDA0012
      EQUIVALENCE              (DTEMP,HTEMP),        (HTEMP(4),ITEMP)   NUDA0013
      REAL NAME                                                         NUDA0014
C                                                                       NUDA0015
  501 FORMAT(A6)                                                        NUDA0016
  502 FORMAT(I3,A6,2(15X,I3,A6))                                        NUDA0017
  503 FORMAT(I3,I2,2(19X,I3,I2))                                        NUDA0018
  504 FORMAT(3(I3,D21.16))                                              NUDA0019
  600 FORMAT(1H1,52X,13HOVERLAY INPUT)                                  NUDA0020
  601 FORMAT(16H0THE ARRAY NAME ,A6,15H DOES NOT EXIST)                 NUDA0021
  602 FORMAT(7H0ARRAY ,A6)                                              NUDA0022
  603 FORMAT(6X,3(I3,3X,A6,22X))                                        NUDA0023
  604 FORMAT(6X,3(I3,3X,I2,26X))                                        NUDA0024
  605 FORMAT(6X,3(I3,D25.16,6X))                                        NUDA0025
C                                                                       NUDA0026
      DATA ARRAY/6HSTANAM,6HPAIR  ,6HKODSTA,6HNALIGN,6HFTR   ,6HCFRAC1, NUDA0027
     16HCFRAC2,6HBIAS  ,6HRATIO /                                       NUDA0028
      DATA BLANKS/6H      /                                             NUDA0029
      DATA STOP/6HSTOP  /                                               NUDA0030
C                                                                       NUDA0031
    1 WRITE(6,600)                                                      NUDA0032
   10 K=1                                                               NUDA0033
      LOC=0                                                             NUDA0034
      READ(5,501) NAME                                                  NUDA0035
      IF(NAME.EQ.BLANKS.OR.NAME.EQ.STOP) GO TO 999                      NUDA0036
      DO 11 I=1,9                                                       NUDA0037
      KK=I                                                              NUDA0038
      IF(NAME.EQ.ARRAY(I)) GO TO 12                                     NUDA0039
   11 CONTINUE                                                          NUDA0040
      WRITE(6,601) NAME                                                 NUDA0041
      STOP                                                              NUDA0042
   12 CONTINUE                                                          NUDA0043
      WRITE(6,602) NAME                                                 NUDA0044
      GO TO (20,20,30,30,40,40,40,40,40),KK                             NUDA0045
   20 CONTINUE                                                          NUDA0046
C                                                                       NUDA0047
C     INPUT BCD DATA                                                    NUDA0048
  201 KOUNT=0                                                           NUDA0049
      READ(5,502) (IND(I),HTEMP(I),I=1,3)                               NUDA0050
      IF(IND(1).EQ.0.AND.HTEMP(1).EQ.BLANKS) GO TO 10                   NUDA0051
      DO 24 I=1,3                                                       NUDA0052
      IF(IND(I).NE.0) GO TO 21                                          NUDA0053
      IF(HTEMP(I).EQ.BLANKS) GO TO 26                                   NUDA0054
      IND(I)=LOC+1                                                      NUDA0055
   21 LOC=IABS(IND(I))                                                  NUDA0056
      KOUNT=KOUNT+1                                                     NUDA0057
      IF(KK.EQ.2) GO TO 23                                              NUDA0058
      STANAM(LOC)=HTEMP(I)                                              NUDA0059
   22 IF(IND(I).LT.0) GO TO 25                                          NUDA0060
      GO TO 24                                                          NUDA0061
   23 PAIR(LOC)=HTEMP(I)                                                NUDA0062
      GO TO 22                                                          NUDA0063
   24 CONTINUE                                                          NUDA0064
      GO TO 26                                                          NUDA0065
   25 K=0                                                               NUDA0066
   26 WRITE(6,603) (IND(I),HTEMP(I),I=1,KOUNT)                          NUDA0067
      IF(K.EQ.0) GO TO 10                                               NUDA0068
      GO TO 201                                                         NUDA0069
   30 CONTINUE                                                          NUDA0070
C                                                                       NUDA0071
C     INPUT INTEGER DATA                                                NUDA0072
  301 KOUNT=0                                                           NUDA0073
      READ(5,503) (IND(I),ITEMP(I),I=1,3)                               NUDA0074
```

```
      IF(IND(1).EQ.0.AND.ITEMP(1).EQ.0) GO TO 10                        NUDA0075
      DO 34 I=1,3                                                       NUDA0076
      IF(IND(I).NE.0) GO TO 31                                          NUDA0077
      IF(ITEMP(I).EQ.0) GO TO 36                                        NUDA0078
      IND(I)=LOC+1                                                      NUDA0079
   31 LOC=IABS(IND(I))                                                  NUDA0080
      KOUNT=KOUNT+1                                                     NUDA0081
      IF(KK.EQ.4) GO TO 33                                              NUDA0082
      KODSTA(LOC)=ITEMP(I)                                              NUDA0083
   32 IF(IND(I).LT.0) GO TO 35                                          NUDA0084
      GO TO 34                                                          NUDA0085
   33 NALIGN(LOC)=ITEMP(I)                                              NUDA0086
      GO TO 32                                                          NUDA0087
   34 CONTINUE                                                          NUDA0088
      GO TO 36                                                          NUDA0089
   35 K=0                                                               NUDA0090
   36 WRITE(6,604) (IND(I),ITEMP(I),I=1,KOUNT)                          NUDA0091
      IF(K.EQ.0) GO TO 10                                               NUDA0092
      GO TO 301                                                         NUDA0093
   40 CONTINUE                                                          NUDA0094
      KK=KK-4                                                           NUDA0095
C                                                                       NUDA0096
C     INPUT DOUBLE PRECISION DATA                                       NUDA0097
  401 KOUNT=0                                                           NUDA0098
      READ(5,504) (IND(I),DTEMP(I),I=1,3)                               NUDA0099
      IF(IND(1).EQ.0.AND.DTEMP(1).EQ.0.) GO TO 10                       NUDA0100
      DO 48 I=1,3                                                       NUDA0101
      IF(IND(I).NE.0) GO TO 41                                          NUDA0102
      IF(DTEMP(I).EQ.0.) GO TO 50                                       NUDA0103
      IND(I)=LOC+1                                                      NUDA0104
   41 LOC=IABS(IND(I))                                                  NUDA0105
      KOUNT=KOUNT+1                                                     NUDA0106
      GO TO (42,44,45,46,47),KK                                         NUDA0107
   42 FTR(LOC)=DTEMP(I)                                                 NUDA0108
   43 IF(IND(I).LT.0) GO TO 49                                          NUDA0109
      GO TO 48                                                          NUDA0110
   44 C1(LOC)=DTEMP(I)                                                  NUDA0111
      GO TO 43                                                          NUDA0112
   45 C2(LOC)=DTEMP(I)                                                  NUDA0113
      GO TO 43                                                          NUDA0114
   46 BIAS(LOC)=DTEMP(I)                                                NUDA0115
      GO TO 43                                                          NUDA0116
   47 RETR(LOC)=DTEMP(I)                                                NUDA0117
      GO TO 43                                                          NUDA0118
   48 CONTINUE                                                          NUDA0119
      GO TO 50                                                          NUDA0120
   49 K=0                                                               NUDA0121
   50 WRITE(6,605) (IND(I),DTEMP(I),I=1,KOUNT)                          NUDA0122
      IF(K.EQ.0) GO TO 10                                               NUDA0123
      GO TO 401                                                         NUDA0124
  999 RETURN                                                            NUDA0125
      END                                                               NUDA0126
```

Subroutine: NUTAIT

Purpose: To compute EN, the transformation from mean equator, equinox to true equator, equinox; and to compute ØM,CR,DT and EPSIL required by MNA.

Calling Sequence: CALL NUTAIT(TIME,ØM,CR,DT,EN,EPSIL)

Input and Output

I/Ø	Symbolic Name or Location	Program Dimensions	Math Symbol	Data Dimensions or Units	Definition
I	TIME			days	Total number of days from 1950 Jan 0.0
Ø	ØM			rad	Argument of moon's descending node.
Ø	CR			rad	Mean longitude of moon.
Ø	DT			rad	Nutation in longitude of equinox.
Ø	EN				Nutation matrix.
Ø	EPSIL			rad	True obliquity.

Common storages used: None

Subroutines required: None

```
$IBFTC MC13NU  XR3,LIST
      SUBROUTINE NUTAIT (TIME,OM,CR,DT,EN,EPSIL)                        NVTA0000
CMC13NU  SUBROUTINE NUTAIT                                              NVTA001
      DIMENSION EN(3,3)                                                 NVTA0020
      DATA DTR/.0174532925/                                             NVTA003
      D = TIME                                                          NVTA0040
      T = D/36525.                                                      NVTA0050
      T2 = T*T                                                          NVTA0060
      T3 = T2*T                                                         NVTA0070
      OM = 12.112790-.052953922*D+.0020795*T+.002081*T2+.000002*T3      NVTA0080
      CR = 64.375452+13.176397*D-.001131575*T-.00113015*T2+.0000019*T3  NVTA0090
      GP = 208.84399+.11140408*D-.010334*T-.010343*T2-.000012*T3        NVTA0100
      VL = 280.08121+.98564734*D+.000303*(T+T2)                         NVTA0110
      G = 282.08053+.0000470684*D+.00045525*T+.0004575*T2+.000003*T3    NVTA0120
      OM = OM*DTR                                                       NVTA013
      CR = CR*DTR                                                       NVTA014
      GP = GP*DTR                                                       NVTA015
      VL = VL*DTR                                                       NVTA016
      G = G*DTR                                                         NVTA017
      DE = 25.5844*COS (OM)-.2511*COS (2.*OM)+1.5336*COS (2.*VL)        NVTA0180
     1 +.0666*COS (3.*VL-G)-.0258*COS (VL+G)-.0183*COS (2.*VL-OM)       NVTA0190
     2 -.0067*COS (2.*GP-OM)                                            NVTA0200
      DD = .2456*COS (2.*CR)+.0508*COS (2.*CR-OM)+.0369*COS (3.*CR-GP)  NVTA0210
     1 -.0139*COS (CR+GP)-.0086*COS (CR-GP+OM)+.0083*COS (CR-GP-OM)     NVTA0220
     2 +.0061*COS (3.*CR+GP-2.*VL)+.0064*COS (3.*CR-GP-OM)              NVTA0230
      DT = -(47.8927+.0482*T)*SIN (OM)+.58*SIN (2.*OM)                  NVTA0240
     1 -3.5361*SIN (2.*VL)-.1378*SIN (3.*VL-G)+.0594*SIN (VL+G)         NVTA0250
     2 +.0344*SIN (2.*VL-OM)+.0125*SIN (2.*GP-OM)+.35*SIN (VL-G)        NVTA0260
     3 +.0125*SIN (2.*VL-2.*GP)                                         NVTA0270
      DS = -.5658*SIN (2.*CR)-.095*SIN (2.*CR-OM)-.0725*SIN (3.*CR-GP)  NVTA0280
     1 +.0317*SIN (CR+GP)+.0161*SIN (CR-GP+OM)+.0158*SIN (CR-GP-OM)     NVTA0290
     2 -.0144*SIN (3.*CR+GP-2.*VL)-.0122*SIN (3.*CR-GP-OM)              NVTA0300
     3 +.1875*SIN (CR-GP)+.0078*SIN (2.*CR-2.*GP)                       NVTA0310
     4 +.0414*SIN (CR+GP-2.*VL)+.0167*SIN (2.*CR-2.*VL)                 NVTA0320
     5 -.0089*SIN (4.*CR-2.*VL)                                         NVTA0330
      DE = DTR*.0001*(DE+DD)                                            NVTA034
      DT=DTR*.0001*(DT+DS)                                              NVTA035
      EB = 23.4457587-.01309404*T-.00000088*T2+.0000005*T3              NVTA0360
      EB = EB*DTR                                                       NVTA037
      EPSIL = EB+DE                                                     NVTA0380
      EN(1,1) = 1.                                                      NVTA0390
      EN(1,2) = -DT*COS (EB)                                            NVTA0400
      EN(1,3) = -DT*SIN (EB)                                            NVTA0410
      EN(2,1) = -EN(1,2)                                                NVTA0420
      EN(2,2) = 1.                                                      NVTA0430
      EN(2,3) = -DE                                                     NVTA0440
      EN(3,1) = -EN(1,3)                                                NVTA0450
      EN(3,2) = DE                                                      NVTA0460
      EN(3,3) = 1.                                                      NVTA0470
      RETURN                                                            NVTA0480
      END
```

Subroutine: .ØPTW.

Purpose: To change the option words ØPTWD1 and ØPTWD2 to allow the optional return from FXEM when an illegal character is read on a raw data tape or when a bad record causes a permanent read redundancy.

Calling Sequence: None.

Common storages used: /.ØPTW./

Subroutines required: None

Discussion

This is a MAP subroutine by absolute necessity for use of the IBM 7094 with the IBSYS Operating System, Version 13. For other systems, an equivalent subroutine must be supplied by the User.

When an attempt is made to read illegal characters from a raw data tape, the usual response is a program stop. In the IBSYS Operating System, the object program error procedure is controlled by subroutine FXEM, which normally terminates execution and passes control to subroutine .LXCON when the above stated error condition (or any of a number of other error conditions) exists. However, some error conditions allow execution to be resumed by using optional exits from FXEM. The use of these optional exits is controlled by bits in words ØPTWD1, ØPTWD2, and ØPTWD3. The optional exit for illegal characters is to replace the illegal characters with zeros and proceed. This subroutine alters bits 32 and 33 of ØPTWD1 from the delivered version to allow this optional response.

On some raw data tapes an occasional bad record causing a permanent read redundancy has been found. This also normally causes a program stop. The optional return from FXEM for this condition is to accept the bad record as read the hundredth time and proceed. This subroutine alters bit 35 of ØPTWD1 and bit 7 of ØPTWD2 to allow this optional response.

For futher details see IBM Form C28-6389-2, IBM 7090/7094 IBSYS Operating System, Version 13, IBJOB Processor, page 107, "Fortran IV Utility Library", and page 158, "Subroutine Library Error Messages, FORTRAN IV Subroutine Messages".

```
$IBMAP MC138F
       ENTRY   .OPTW.                                                   OPTW0001
       REM     WHEN AN ATTEMPT IS MADE TO READ ILLEGAL CHARACTERS       OPTW0002
       REM     FROM RAW DATA TAPES, THE USUAL RESPONSE IS A PROGRAM     OPTW0003
       REM     STOP.  THIS SUBROUTINE PERMITS THE OPTIONAL RESPONSE,    OPTW0004
       REM     WHICH IS TO REPLACE THE ILLEGAL CHARACTER WITH A ZERO.   OPTW0005
       REM     THIS IS DONE BY ADDING ONES TO BITS 32 AND 33 OF THE     OPTW0006
       REM     OPTION WORD OPTWD1 USED BY FXEM.                         OPTW0007
       REM     A BAD RECORD MAY ALSO CAUSE A PERMANENT READ REDUNDANCY. OPTW0008
       REM     THE OPTIONAL RETURN IS TO ACCEPT THE RECORD AS READ THE  OPTW0009
       REM     HUNDREDTH TIME.  THIS IS DONE BY ADDING ONES TO BIT 35   OPTW0010
       REM     OF OPTWD1 AND BIT 7 OF OPTWD2.                           OPTW0011
       REM     REF.  IBM FORM C28-6389-2, IBM 7090/7094 IBSYS OPERATING OPTW0012
       REM     SYSTEM, VERSION 13, IBJOB PROCESSOR, PAGES 107,          OPTW0013
       REM     FORTRAN IV UTILITY LIBRARY, AND 158, FORTRAN IV          OPTW0014
       REM     SUBROUTINE MESSAGES.                                     OPTW0015
.OPTW. OCT     377777777755  ADD ONES TO BITS 32, 33, AND 35 OF OPTWD1  OPTW0016
       OCT     002000000000  ADD ONE TO BIT 7 OF                OPTWD2  OPTW0017
       OCT     376000000000  LEAVE AS DELIVERED                 OPTWD3  OPTW0018
       END
```

Subroutine: ØRB

Purpose: To compute and print out orbital elements.

Calling Sequence: CALL ØRB (X,DX,U)

Input and Output

I/Ø	Symbolic Name or Location	Program Dimensions	Math Symbol	Data Dimensions or Units	Definition
I	X	(3)		km	Position
I	DX	(3)		km/sec	Velocity
I	U			km^3/sec^2	Gravitational constant

Common storages used: 22 cells

Subroutines required: CRØSS, FNØRM, DØT, ARKTNS, TCØNIC

```
$IBFTC MC130R  XR3,M94,NODD,LIST
      SUBROUTINE ORB (X,DX,U)                                           ORB 0001
C     COMPUTES AND WRITES ORBITAL ELEMENTS                              ORB 0002
      COMMON     C(12),D(10)                                            ORB 0003
      DIMENSION  X(3) ,DX(3) ,B(3)                                      ORB 0004
      EQUIVALENCE(D( 1),A  ) ,(C( 7),C3 ) ,(C( 9),PRV) ,(C(12),TPR)     ORB 0005
     1           ,(D( 4),B  ) ,(C( 2),ECC) ,(D( 9),R  ) ,(D(10),UM )    ORB 0006
     2           ,(D( 3),B1 ) ,(C( 3),OIN) ,(C( 6),RCA) ,(C( 7),V2 )    ORB 0007
     3           ,(D( 2),B2 ) ,(C( 4),OMG) ,(C( 1),SMA) ,(C(11),VIM)    ORB 0008
     4           ,(C( 5),BEP) ,(C(10),P  ) ,(C( 8),THE)                 ORB 0009
      DATA   R2D/57.2957795/                                            ORB 0010
  601 FORMAT(5H  SMAE15.8,5H  ECCE15.8,5H  INCE15.8,5H  LANE15.8,5H  APFORB 0011
     1E15.8,5H  RCAE15.8/5H   C3E15.8,5H THETE15.8,5H PERVE15.8,5H  SLREORB 0012
     215.8,5H IMPVE15.8,5H TPERE15.8)                                   ORB 0013
    1 UM = U                                                            ORB 0014
      CALL CROSS (X,DX,B)                                               ORB 0015
      R  = FNORM (X)                                                    ORB 0016
      V2 = DOT(DX,DX)                                                   ORB 0017
      A  = DOT(X,DX)/UM                                                 ORB 0018
      B1 = B(1)*B(1)+B(2)*B(2)                                          ORB 0019
      B2 = B1+B(3)*B(3)                                                 ORB 0020
      P  = B2/UM                                                        ORB 0021
      C3 = V2-2.*UM/R                                                   ORB 0022
      SMA=-UM/C3                                                        ORB 0023
      ECC= SQRT(1.+C3*P/UM)                                             ORB 0024
      B1 = SQRT(B1)                                                     ORB 0025
      B2 = SQRT(B2)                                                     ORB 0026
      A  = A*B2                                                         ORB 0027
      RCA= P/(1.+ECC)                                                   ORB 0028
      PRV=SQRT(C3+2.*UM/RCA)                                            ORB 0029
      VIM= PRV-SQRT(UM/RCA)                                             ORB 0030
      C(20) = X(2)*B(1)-X(1)*B(2)                                       ORB 0031
      C(19) = -B(2)                                                     ORB 0032
      C(17) = X(3)*B2                                                   ORB 0033
      DO 2 I=1,3                                                        ORB 0034
    2 C(I+2) = R2D*ARCTNS(360,C(I+17),C(I+14))                          ORB 0035
      THE = ARCTNS(180,P-R,A)                                           ORB 0036
      CALL TCONIC(UM,ECC,SMA,P,THE,TPR,A)                               ORB 0037
      THE = THE*R2D                                                     ORB 0038
      TPR = TPR/86400.                                                  ORB 0039
      BEP = BEP-THE                                                     ORB 0040
      IF(BEP.LT.0.)BEP=BEP+360.                                         ORB 0041
      IF(BEP.GE.360.)BEP=BEP-360.                                       ORB 0042
      WRITE (6,601) C                                                   ORB 0043
      RETURN                                                            ORB 0044
      END
```

Subroutine: ØUTTRJ

Purpose: To control output on the system output tape and the accumulation of interpolation coefficients during trajectory integration for the DCP estimation/propagation link.

Calling Sequence: CALL ØUTTRJ

Common storages used: //40 cells,/DCPCØM/,/DFMCØM/,/DQDCØM/,/ESTCØM/, /SBFCØM/,/TRJCØM/

Subroutines required: DATØUP, DEHA, DMVTRN, DNØRM, DPFMRS, GTR2BD, ØUTXPD, STEPDP, STEPDT

Discussion

ØUTTRJ is called by DEQD to output the results of trajectory integration. It controls output of the vehicle state on the system output tape, and accumulates state and transition matrix interpolation tables for use by the estimation link (ESTMAT).

The output on the system tape is accomplished by ØUTXPD (q.v.) and is controlled by the keys NPRØUT and NDPØUT. The values of the keys and their effect are:

NPRØUT = 1 : output vehicle state during propagation processes only.

= 2 : output during propagation and during integration of the nominal trajectory up to the start of the interpolation table accumulation.

≥ 3 : output during any integration, including accumulation of interpolation tables.

NDPØUT = 1 : output state in single precision (8 significant figures).

2 : output state in double precision (16 figures).

The accumulation of interpolation tables starts when the next integration interval will cause time (XDEQ(1)) to exceed the value stored in TBF. The interval for table storage (HBF) is set not to exceed the upper limit for integration interval size.

At the initial point, t_o, of the interpolation interval, TBF and TFF are replaced by t_o and t_o + 7HBF, respectively, and the vector RBF is loaded as described below. At each point, t_o + nHBF, n = 0, 1, ... ,7, the n +1st column of VBF is loaded. When all 8 columns have been loaded, the columns

of VBF are converted to interpolation coefficients (see Reference 1, Appendix D), and NDEQ(8) is set to stop the integration.

Let

$R, \dot{R}$	=	Vehicle position and velocity with respect to Earth
$\begin{bmatrix} \varphi_1 & \varphi_2 \\ \dot{\varphi}_1 & \dot{\varphi}_2 \end{bmatrix}$	=	(each 3X3) state transition matrix
$\begin{bmatrix} \varphi_u \\ \dot{\varphi}_u \end{bmatrix}$	=	(each 3XNEMPS) sensitivities of vehicle state to equation of motion parameters
$\delta\Psi, \delta\varepsilon$	=	nutations in longitude and obliquity
Δt	=	transmission delay, from vehicle to receiving station
$R_E, \dot{R}_E$	=	Position and velocity of Earth with respect to central body.

The components of RBF and the (n+1)st column of VBF are

RBF	=	R	(3 components)
		$\left.\begin{matrix}\varphi_1 \\ \varphi_2\end{matrix}\right\}$	(18 components)
		φ_u	3XNEMPS components
		Not used	3 components
		R_E	3 components

at time t_o and

$$VBF(\ \ ,n+1) = \begin{matrix} \dot{R} \\ \dot{\varphi}_1 \\ \dot{\varphi}_2 \\ \varphi_u \\ \delta_\Psi \\ \delta_\varepsilon \\ \Delta t \end{matrix}$$

at time t_o + nHBF.

```
$IBFTC MC1327  XR3,M94,NODD,LIST
      SUBROUTINE OUTTRJ                                                 OUTJ0001
C     CONTROLS OUTPUT FOR THE PROPAGATION/ESTIMATION LINK               OUTJ0002
C     ACCUMULATES INTERPOLATION TABLES                                  OUTJ0003
C                                                                       OUTJ0004
      DOUBLE PRECISION   DCOS ,DSIN                                     OUTJ0005
C                                                                       OUTJ0006
      COMMON            /DCPCOM/CDCP(900)                               OUTJ0007
      DOUBLE PRECISION   SN(13,20) ,SPDLT                               OUTJ0008
      EQUIVALENCE              (CDCP(111),IERR  ) ,(CDCP(676),NPROUT)   OUTJ0009
     1                        ,(CDCP(758),INDSTA) ,(CDCP(780),NTBL  )   OUTJ0010
     2    ,(CDCP(112),ETAPE ) ,(CDCP(686),NDPOUT) ,(CDCP(143),SN    )   OUTJ0011
     3    ,(CDCP(777),ICB   ) ,(CDCP(700),NPEND ) ,(CDCP( 15),SPDLT )   OUTJ0012
C                                                                       OUTJ0013
      COMMON            /ESTCOM/CEST(804)                               OUTJ0014
      DOUBLE PRECISION   DELDAN(2) ,SE(14,20)                           OUTJ0015
      EQUIVALENCE       (CEST( 97),DELDAN) ,(CEST(245),SE     )         OUTJ0016
     1                 ,(CEST( 61),EFEDAN)                              OUTJ0017
C                                                                       OUTJ0018
      COMMON            /SBFCOM/CSBF(12),RBF(45),VBF(45,8)              OUTJ0019
      DOUBLE PRECISION   RBF,VBF                                        OUTJ0020
     1                 ,HBF,TBF,TFF                                     OUTJ0021
      EQUIVALENCE              (CSBF( 1),KBF   ) ,(CSBF( 9),TBF   )     OUTJ0022
     1    ,(CSBF( 7),HBF   ) ,(CSBF( 2),NTP   ) ,(CSBF(11),TFF   )     OUTJ0023
C                                                                       OUTJ0024
      COMMON            /TRJCOM/CTRJ(246)                               OUTJ0025
      DOUBLE PRECISION   ETFMS ,RC(3) ,RCONIC(3) ,PCONIC(6,6)           OUTJ0026
     1                 ,UTIMV ,VC(3) ,VCONIC(3)                         OUTJ0027
      EQUIVALENCE              (CTRJ(151),RC    ) ,(CTRJ(163),RCONIC)   OUTJ0028
     1    ,(CTRJ(  1),ETFMS ) ,(CTRJ(157),VC    ) ,(CTRJ(169),VCONIC)   OUTJ0029
     2    ,(CTRJ(  3),UTIMV ) ,(CTRJ( 23),TC2D  ) ,(CTRJ(175),PCONIC)   OUTJ0030
C                                                                       OUTJ0031
      COMMON            /DFMCOM/IFM(14),RFM(6,12)                       OUTJ0032
     1                        ,DFM (4),BFM (577),SNT(2,102)             OUTJ0033
      DOUBLE PRECISION   BFM,DFM,RFM                                    OUTJ0034
C                                                                       OUTJ0035
      COMMON            /DQDCOM/NDEQ(10),CDEQ(10),XDEQ (4)              OUTJ0036
     1                        ,ADEQ(44),RDEQ(44),VDEQ(44),FDEQ(44,10)   OUTJ0037
      DOUBLE PRECISION   ADEQ,FDEQ,RDEQ,VDEQ,XDEQ                       OUTJ0038
      DOUBLE PRECISION   ETIMV                                          OUTJ0039
      EQUIVALENCE       (XDEQ,ETIMV)                                    OUTJ0040
C                                                                       OUTJ0041
      COMMON             D(20)                                          OUTJ0042
      DOUBLE PRECISION   D                                              OUTJ0043
C                                                                       OUTJ0044
      DOUBLE PRECISION   A(8,8)                                         OUTJ0045
      DATA A/ 2520.D0,   -6534.D0,   13132.D0,  -20307.D0               OUTJ0046
     1               ,   23520.D0,  -19320.D0,   10080.D0,  -2520.D0    OUTJ0047
     2       ,    0.D0,  17640.D0,  -56196.D0,  107184.D0              OUTJ0048
     2               , -139860.D0,  123900.D0,  -68040.D0,  17640.D0    OUTJ0049
     3       ,    0.D0, -26460.D0,  110754.D0, -247527.D0              OUTJ0050
     3               ,  357840.D0, -340200.D0,  196560.D0, -52920.D0    OUTJ0051
     4       ,    0.D0,  29400.D0, -132860.D0,  326760.D0              OUTJ0052
     4               , -511980.D0,  518700.D0, -315000.D0,  88200.D0    OUTJ0053
     5       ,    0.D0, -22050.D0,  103320.D0, -267225.D0              OUTJ0054
     5               ,  443520.D0, -474600.D0,  302400.D0, -88200.D0    OUTJ0055
     6       ,    0.D0,  10584.D0,  -50652.D0,  135072.D0              OUTJ0056
     6               , -233100.D0,  260820.D0, -173880.D0,  52920.D0    OUTJ0057
     7       ,    0.D0,  -2940.D0,   14266.D0,  -38829.D0              OUTJ0058
     7               ,   68880.D0,  -79800.D0,   55440.D0, -17640.D0    OUTJ0059
     8       ,    0.D0,    360.D0,   -1764.D0,    4872.D0              OUTJ0060
     8               ,   -8820.D0,   10500.D0,   -7560.D0,   2520.D0 /  OUTJ0061
C                                                                       OUTJ0062
  601 FORMAT(9H0ETIMV = ,D24.16,15H SEC,  UTIMV = ,D24.16,4H SEC)       OUTJ0063
C                                                                       OUTJ0064
C     POSITION AND VELOCITY                                             OUTJ0065
C                                                                       OUTJ0066
    1 IF (ETFMS.EQ.ETIMV) GO TO 2                                       OUTJ0067
C     PLANETARY POSITIONS AND VELOCITIES                                OUTJ0068
      CALL DPFMRS (ETIMV,EFEDAN,ICB,IERR,ETAPE)                         OUTJ0069
      IF (IERR.NE.0)       GO TO 998                                    OUTJ0070
      ETFMS = ETIMV                                                     OUTJ0071
      UTIMV = ETIMV-DELDAN(1)-DELDAN(2)*ETIMV                           OUTJ0072
C     REFERENCE CONIC                                                   OUTJ0073
      CALL STEPDT (ETIMV,RCONIC)                                        OUTJ0074
```

```
      CALL STEPDP (PCONIC)                                              OUTJ0075
C     CENTRAL BODY ORIENTATION                                          OUTJ0076
    2 CALL GTR2BD (ICB,DFM,1)                                           OUTJ0077
C     POSITION AND VELOCITY RELATIVE TO CENTRAL BODY                    OUTJ0078
      DO 3 I=1,3                                                        OUTJ0079
      RC(I) = RDEQ(I)+RCONIC(I)                                         OUTJ0080
      VC(I) = VDEQ(I)+VCONIC(I)                                         OUTJ0081
    3 CONTINUE                                                          OUTJ0082
      GO TO ( 5, 4,20) ,NTP                                             OUTJ0083
    4 S = TBF-ETIMV                                                     OUTJ0084
      S = S/CDEQ(1)                                                     OUTJ0085
      IF (CDEQ(1).LT.0.) S = S+1.                                       OUTJ0086
      IF (S.GE.2.)       GO TO 70                                       OUTJ0087
      CDEQ(4) = CDEQ(1)                                                 OUTJ0088
      IF (S.GE.1.)       GO TO 70                                       OUTJ0089
      GO TO 998                                                         OUTJ0090
    5 IF (NDEQ(8).EQ.0)  GO TO 70                                       OUTJ0091
C                                                                       OUTJ0092
C     INITIALIZE BUFFER                                                 OUTJ0093
C                                                                       OUTJ0094
   20 IF (KBF.NE.0)      GO TO 30                                       OUTJ0095
      HBF = CDEQ(1)*FLOAT(NTBL)                                         OUTJ0096
      TBF = ETIMV                                                       OUTJ0097
      TFF = ETIMV+7.D0*HBF                                              OUTJ0098
      KTBL = 0                                                          OUTJ0099
      L = NPEND                                                         OUTJ0100
      DO 21 I=1,3                                                       OUTJ0101
      RBF(I) = RC(I)-RFM(I,3)                                           OUTJ0102
      L = L+1                                                           OUTJ0103
   21 CONTINUE                                                          OUTJ0104
      L = 4                                                             OUTJ0105
      DO 22 J=1,6                                                       OUTJ0106
      DO 22 I=1,3                                                       OUTJ0107
      RBF(L) = RDEQ(L)+PCONIC(I,J)                                      OUTJ0108
   22 L = L+1                                                           OUTJ0109
      IF (NPEND.EQ.22) GO TO 30                                         OUTJ0110
      DO 23 I=23,NPEND                                                  OUTJ0111
   23 RBF(I-1) = RDEQ(I-1)                                              OUTJ0112
C                                                                       OUTJ0113
C     STORE DERIVATIVES                                                 OUTJ0114
C                                                                       OUTJ0115
   30 KTBL = KTBL-1                                                     OUTJ0116
      IF (KTBL.GT.0)    GO TO 70                                        OUTJ0117
      KTBL = NTBL                                                       OUTJ0118
      KBF = KBF+1                                                       OUTJ0119
      L = NPEND                                                         OUTJ0120
      DO 31 I=1,3                                                       OUTJ0121
      D(I) = RC(I)-RFM(I,3)                                             OUTJ0122
      VBF(I,KBF) = VC(I)-RFM(I+3,3)                                     OUTJ0123
      L = L+1                                                           OUTJ0124
   31 CONTINUE                                                          OUTJ0125
      L = 4                                                             OUTJ0126
      DO 32 J=1,6                                                       OUTJ0127
      DO 32 I=1,3                                                       OUTJ0128
      VBF(L,KBF) = VDEQ(L)+PCONIC(I+3,J)                                OUTJ0129
   32 L = L+1                                                           OUTJ0130
      IF (NPEND.EQ.22) GO TO 34                                         OUTJ0131
      DO 33 I=23,NPEND                                                  OUTJ0132
   33 VBF(I-1,KBF) = VDEQ(I-1)                                          OUTJ0133
   34 CONTINUE                                                          OUTJ0134
      VBF(NPEND  ,KBF) = DFM(1)                                         OUTJ0135
      VBF(NPEND+1,KBF) = DFM(2)                                         OUTJ0136
      D(7) = UTIMV+VBF(NPEND+2,KBF)                                     OUTJ0137
      CALL DEHA (D(7),DFM(4),D(8),D(9))                                 OUTJ0138
      D(7) = DSIN(D(8))                                                 OUTJ0139
      D(8) = DCOS(D(8))                                                 OUTJ0140
      D(4) = SN(2,INDSTA)*D(8)+SN(3,INDSTA)*D(7)                        OUTJ0141
      D(5) = SN(3,INDSTA)*D(8)-SN(2,INDSTA)*D(7)                        OUTJ0142
      D(6) = SN(4,INDSTA)                                               OUTJ0143
      CALL DMVTRN (TC2D,D(4),D(7),2,1)                                  OUTJ0144
      DO 35 I=1,3                                                       OUTJ0145
   35 D(I) = D(I)-D(I+6)                                                OUTJ0146
      VBF(NPEND+2,KBF) = DNORM(D)/(SPDLT+SE(6,INDSTA))                  OUTJ0147
      IF (KBF.EQ.8)     GO TO 50                                        OUTJ0148
      VBF(NPEND+2,KBF+1) = VBF(NPEND+2,KBF)                             OUTJ0149
```

```
      GO TO 70                                                          OUTJ0150
C                                                                       OUTJ0151
C     CONVERT TO INTERPOLATION COEFFICIENTS                             OUTJ0152
C                                                                       OUTJ0153
   50 NDELT = NPEND+2                                                   OUTJ0154
      DO 52 I=1,NDELT                                                   OUTJ0155
      DO 51 J=1,8                                                       OUTJ0156
      D(J) = 0.D0                                                       OUTJ0157
      DO 51 K=1,8                                                       OUTJ0158
   51 D(J) = D(J)+A(J,K)*VBF(I,K)                                       OUTJ0159
      DO 52 J=1,8                                                       OUTJ0160
   52 VBF(I,J) = D(J)/A(1,1)                                            OUTJ0161
C                                                                       OUTJ0162
C     CONVERT TIME SCALE FOR TRANSMISSION DELAY                         OUTJ0163
C                                                                       OUTJ0164
   60 D( 9) =-(1.D0+VBF(NDELT,2)/HBF)                                   OUTJ0165
      D(10) =-VBF(NDELT,1)                                              OUTJ0166
      D(11) = 0.D0                                                      OUTJ0167
      D(13) = 1.D0                                                      OUTJ0168
      DO 64 I=1,8                                                       OUTJ0169
      DO 63 J=1,2                                                       OUTJ0170
      D( I) = D(10)-D(11)                                               OUTJ0171
      D(14) = D(10)/HBF                                                 OUTJ0172
      D(12) = 2.D0                                                      OUTJ0173
      DO 61 K=1,6                                                       OUTJ0174
      D(K+14) = D(K+13)*D(14)/D(12)                                     OUTJ0175
   61 D(12) = D(12)+1.D0                                                OUTJ0176
      DO 62 K=1,8                                                       OUTJ0177
   62 D( I) = D(I)+VBF(NDELT,K)*D(K+12)                                 OUTJ0178
   63 D(10) = D(10)+D(I)/D(9)                                           OUTJ0179
      D( I) = D(11)-D(10)                                               OUTJ0180
      D(10) = D(10)+HBF                                                 OUTJ0181
   64 D(11) = D(11)+HBF                                                 OUTJ0182
      DO 66 I=1,8                                                       OUTJ0183
      VBF(NDELT,I) = 0.D0                                               OUTJ0184
      DO 65 J=1,8                                                       OUTJ0185
   65 VBF(NDELT,I) = VBF(NDELT,I)+A(I,J)*D(J)                           OUTJ0186
   66 VBF(NDELT,I) = VBF(NDELT,I)/A(1,1)                                OUTJ0187
      NDEQ(8) = 3                                                       OUTJ0188
C                                                                       OUTJ0189
C     RUNNING OUTPUT                                                    OUTJ0190
C                                                                       OUTJ0191
   70 IF (NPROUT-NTP+1) 999,71,72                                       OUTJ0192
   71 IF (KBF.NE.1.OR.KTBL.NE.NTBL) GO TO 999                           OUTJ0193
   72 WRITE (6,601) ETIMV,UTIMV                                         OUTJ0194
      CALL DATOUP (ETIMV,D(11),0)                                       OUTJ0195
      CALL CUTXPD (NDPOUT)                                              OUTJ0196
      GO TO 999                                                         OUTJ0197
C                                                                       OUTJ0198
  998 NDEQ(8) = 3                                                       OUTJ0199
  999 RETURN                                                            OUTJ0200
      END
```

Subroutine: ØUTTR3

Purpose: To control output on the system output tape and the accumulation of interpolation coefficients during trajectory integration for the DCP residual link.

Calling Sequence: CALL ØUTTR3

Common Storages Used: //40 cells,/DCPCØM/,/DFMCØM/,/DQ3CØM/,/ESRCØM/, /SB3CØM/,/TRJCØM/

Subroutines Required: DATØUP, DEHA, DMVTRN, DNØRM, DPFMRS, GTR2BD, ØUTXPD, STEPDT

Method

ØUTTR3 is logically identical to ØUTTRJ, except that only the spacecraft position and velocity and the nutations are stored in SB3CØM.

```
$IBFTC MC1328  XR3,M94,NODD,LIST
      SUBROUTINE OUTTR3                                                 OUT30001
C     CONTROLS OUTPUT FOR THE RESIDUAL LINK                             OUT30002
C     ACCUMULATES INTERPOLATION TABLES                                  OUT30003
C                                                                       OUT30004
      DOUBLE PRECISION   DCOS ,DSIN                                     OUT30005
C                                                                       OUT30006
      COMMON            /DCPCOM/CDCP(900)                               OUT30007
      DOUBLE PRECISION   SN(13,20) ,SPDLT                               OUT30008
      EQUIVALENCE              (CDCP(111),IERR  ) ,(CDCP(677),NRSOUT)   OUT30009
     1                        ,(CDCP(758),INDSTA) ,(CDCP(780),NTBL  )   OUT30010
     2    ,(CDCP(112),ETAPE ) ,(CDCP(686),NDPOUT) ,(CDCP(143),SN    )   OUT30011
     3    ,(CDCP(777),ICB   )                     ,(CDCP( 15),SPDLT )   OUT30012
C                                                                       OUT30013
      COMMON            /ESRCOM/CESR(304)                               OUT30014
      DOUBLE PRECISION   DELDAR(2) ,SER(14,2)                           OUT30015
      EQUIVALENCE       (CESR( 97),DELDAR) ,(CESR(245),SER    )         OUT30016
     1                 ,(CESR( 61),EFEDAR)                              OUT30017
C                                                                       OUT30018
      COMMON            /SB3COM/CSBF(12),RBF(6),VBF(6,8)                OUT30019
      DOUBLE PRECISION   RBF,VBF                                        OUT30020
     1                  ,HBF,TBF,TFF                                    OUT30021
      EQUIVALENCE              (CSBF( 1),KBF   ) ,(CSBF( 9),TBF    )    OUT30022
     1    ,(CSBF( 7),HBF   ) ,(CSBF( 2),NTP   ) ,(CSBF(11),TFF    )    OUT30023
C                                                                       OUT30024
      COMMON            /TRJCOM/CTRJ(246)                               OUT30025
      DOUBLE PRECISION   ETFMS ,RC(3) ,RCONIC(3)                        OUT30026
     1                  ,UTIMV ,VC(3) ,VCONIC(3)                        OUT30027
      EQUIVALENCE              (CTRJ(151),RC    ) ,(CTRJ(163),RCONIC)   OUT30028
     1    ,(CTRJ(  1),ETFMS ) ,(CTRJ(157),VC    ) ,(CTRJ(169),VCONIC)   OUT30029
     2    ,(CTRJ(  3),UTIMV ) ,(CTRJ( 23),TC2D  )                       OUT30030
C                                                                       OUT30031
      COMMON            /DFMCOM/IFM(14),RFM(6,12)                       OUT30032
     1                         ,DFM (4),BFM (577),SNT(2,102)            OUT30033
      DOUBLE PRECISION   BFM,DFM,RFM                                    OUT30034
C                                                                       OUT30035
      COMMON            /DQ3COM/NDEQ(10),CDEQ(10),XDEQ (4)              OUT30036
     1                         ,ADEQ (8),RDEQ (8),VDEQ (8),FDEQ (8,10)  OUT30037
      DOUBLE PRECISION   ADEQ,FDEQ,RDEQ,VDEQ,XDEQ                       OUT30038
      DOUBLE PRECISION   ETIMV                                          OUT30039
      EQUIVALENCE       (XDEQ,ETIMV)                                    OUT30040
C                                                                       OUT30041
      COMMON             D(20)                                          OUT30042
      DOUBLE PRECISION   D                                              OUT30043
C                                                                       OUT30044
      DOUBLE PRECISION   A(8,8)                                         OUT30045
      DATA A/ 2520.D0,   -6534.D0,   13132.D0,  -20307.D0               OUT30046
     1                ,  23520.D0,  -19320.D0,   10080.D0,  -2520.D0    OUT30047
     2       ,    0.D0,  17640.D0,  -56196.D0,  107184.D0              OUT30048
     2                , -139860.D0,  123900.D0,  -68040.D0,  17640.D0   OUT30049
     3       ,    0.D0, -26460.D0,  110754.D0, -247527.D0              OUT30050
     3                ,  357840.D0, -340200.D0,  196560.D0, -52920.D0  OUT30051
     4       ,    0.D0,  29400.D0, -132860.D0,  326760.D0              OUT30052
     4                , -511980.D0,  518700.D0, -315000.D0,  88200.D0  OUT30053
     5       ,    0.D0, -22050.D0,  103320.D0, -267225.D0              OUT30054
     5                ,  443520.D0, -474600.D0,  302400.D0, -88200.D0  OUT30055
     6       ,    0.D0,  10584.D0,  -50652.D0,  135072.D0              OUT30056
     6                , -233100.D0,  260820.D0, -173880.D0,  52920.D0  OUT30057
     7       ,    0.D0,  -2940.D0,   14266.D0,  -38829.D0              OUT30058
     7                ,   68880.D0,  -79800.D0,   55440.D0, -17640.D0  OUT30059
     8       ,    0.D0,    360.D0,   -1764.D0,    4872.D0              OUT30060
     8                ,   -8820.D0,   10500.D0,   -7560.D0,   2520.D0 / OUT30061
C                                                                       OUT30062
  601 FORMAT(9H0ETIMV = ,D24.16,15H SEC,  UTIMV = ,D24.16,4H SEC)       OUT30063
C                                                                       OUT30064
C     POSITION AND VELOCITY                                             OUT30065
C                                                                       OUT30066
    1 IF (ETFMS.EQ.ETIMV) GO TO 2                                       OUT30067
C     PLANETARY POSITIONS AND VELOCITIES                                OUT30068
      CALL DPFMRS (ETIMV,EFEDAR,ICB,IERR,ETAPE)                         OUT30069
      IF (IERR.NE.0)      GO TO 998                                     OUT30070
      ETFMS = ETIMV                                                     OUT30071
      UTIMV = ETIMV-DELDAR(1)-DELDAR(2)*ETIMV                           OUT30072
C     REFERENCE CONIC                                                   OUT30073
      CALL STEPDT (ETIMV,RCONIC)                                        OUT30074
```

```
C     CENTRAL BODY ORIENTATION                                          OUT30075
    2 CALL GTR2BD (ICB,DFM,1)                                           OUT30076
C     POSITION AND VELOCITY RELATIVE TO CENTRAL BODY                    OUT30077
      DO 3 I=1,3                                                        OUT30078
      RC(I) = RDEQ(I)+RCONIC(I)                                         OUT30079
      VC(I) = VDEQ(I)+VCONIC(I)                                         OUT30080
    3 CONTINUE                                                          OUT30081
      GO TO (70, 4,20) ,NTP                                             OUT30082
    4 S = TBF-ETIMV                                                     OUT30083
      S = S/CDEQ(1)                                                     OUT30084
      IF (CDEQ(1).LT.0.) S = S+1.                                       OUT30085
      IF (S.GE.2.)       GO TO 70                                       OUT30086
      CDEQ(4) = CDEQ(1)                                                 OUT30087
      IF (S.GE.1.)       GO TO 70                                       OUT30088
      GO TO 998                                                         OUT30089
C                                                                       OUT30090
C     INITIALIZE BUFFER                                                 OUT30091
C                                                                       OUT30092
   20 IF (KBF.NE.0)      GO TO 30                                       OUT30093
      HBF = CDEQ(1)*FLOAT(NTBL)                                         OUT30094
      TBF = ETIMV                                                       OUT30095
      TFF = ETIMV+7.D0*HBF                                              OUT30096
      KTBL = 0                                                          OUT30097
      DO 21 I=1,3                                                       OUT30098
      RBF(I) = RC(I)-RFM(I,3)                                           OUT30099
   21 CONTINUE                                                          OUT30100
C                                                                       OUT30101
C     STORE DERIVATIVES                                                 OUT30102
C                                                                       OUT30103
   30 KTBL = KTBL-1                                                     OUT30104
      IF (KTBL.GT.0)   GO TO 70                                         OUT30105
      KTBL = NTBL                                                       OUT30106
      KBF = KBF+1                                                       OUT30107
      DO 31 I=1,3                                                       OUT30108
      D(I) = RC(I)-RFM(I,3)                                             OUT30109
      VBF(I,KBF) = VC(I)-RFM(I+3,3)                                     OUT30110
   31 CONTINUE                                                          OUT30111
      VBF(4,KBF) = DFM(1)                                               OUT30112
      VBF(5,KBF) = DFM(2)                                               OUT30113
      D(7) = UTIMV+VBF(6,KBF)                                           OUT30114
      CALL DEHA (D(7),DFM(4),D(8),D(9))                                 OUT30115
      D(7) = DSIN(D(8))                                                 OUT30116
      D(8) = DCOS(D(8))                                                 OUT30117
      D(4) = SN(2,INDSTA)*D(8)+SN(3,INDSTA)*D(7)                        OUT30118
      D(5) = SN(3,INDSTA)*D(8)-SN(2,INDSTA)*D(7)                        OUT30119
      D(6) = SN(4,INDSTA)                                               OUT30120
      CALL DMVTRN (TC2D,D(4),D(7),2,1)                                  OUT30121
      DO 35 I=1,3                                                       OUT30122
   35 D(I) = D(I)-D(I+6)                                                OUT30123
      VBF(6,KBF) = DNORM(D)/(SPDLT+SER(6,1))                            OUT30124
      IF (KBF.EQ.8)     GO TO 50                                        OUT30125
      VBF(6,KBF+1) = VBF(6,KBF)                                         OUT30126
      GO TO 70                                                          OUT30127
C                                                                       OUT30128
C     CONVERT TO INTERPOLATION COEFFICIENTS                             OUT30129
C                                                                       OUT30130
   50 DO 52 I=1,6                                                       OUT30131
      DO 51 J=1,8                                                       OUT30132
      D(J) = 0.D0                                                       OUT30133
      DO 51 K=1,8                                                       OUT30134
   51 D(J) = D(J)+A(J,K)*VBF(I,K)                                       OUT30135
      DO 52 J=1,8                                                       OUT30136
   52 VBF(I,J) = D(J)/A(1,1)                                            OUT30137
C                                                                       OUT30138
C     CONVERT TIME SCALE FOR TRANSMISSION DELAY                         OUT30139
C                                                                       OUT30140
   60 D( 9) =-(1.D0+VBF(6,2)/HBF)                                       OUT30141
      D(10) =-VBF(6,1)                                                  OUT30142
      D(11) = 0.D0                                                      OUT30143
      D(13) = 1.D0                                                      OUT30144
      DO 64 I=1,8                                                       OUT30145
      DO 63 J=1,2                                                       OUT30146
      D( I) = D(10)-D(11)                                               OUT30147
      D(14) = D(10)/HBF                                                 OUT30148
      D(12) = 2.D0                                                      OUT30149
```

```
      DO 61 K=1,6                                                       OUT30150
      D(K+14) = D(K+13)*D(14)/D(12)                                     OUT30151
   61 D(12) = D(12)+1.D0                                                OUT30152
      DO 62 K=1,8                                                       OUT30153
   62 D( I) = D(I)+VBF(6,K)*D(K+12)                                     OUT30154
   63 D(10) = D(10)+D(I)/D(9)                                           OUT30155
      D( I) = D(11)-D(10)                                               OUT30156
      D(10) = D(10)+HBF                                                 OUT30157
   64 D(11) = D(11)+HBF                                                 OUT30158
      DO 66 I=1,8                                                       OUT30159
      VBF(6,I) = 0.D0                                                   OUT30160
      DO 65 J=1,8                                                       OUT30161
   65 VBF(6,I) = VBF(6,I)+A(I,J)*D(J)                                   OUT30162
   66 VBF(6,I) = VBF(6,I)/A(1,1)                                        OUT30163
      NDEQ(8) = 3                                                       OUT30164
C                                                                       OUT30165
C     RUNNING OUTPUT                                                    OUT30166
C                                                                       OUT30167
   70 IF (NRSOUT-NTP+1) 999,71,72                                       OUT30168
   71 IF (KBF.NE.1.OR.KTBL.NE.NTBL) GO TO 999                           OUT30169
   72 WRITE (6,601) ETIMV,UTIMV                                         OUT30170
      CALL DATCUP (ETIMV,D(11),0)                                       OUT30171
      CALL OUTXPD (NDPOUT)                                              OUT30172
      GO TO 999                                                         OUT30173
C                                                                       OUT30174
  998 NDEQ(8) = 3                                                       OUT30175
  999 RETURN                                                            OUT30176
      END
```

Subroutine: ØUTXPD

Purpose: Writes vehicle state relative to the central body and/or Earth in a variety of coordinate systems.

Calling Sequence: CALL OUTXPD (NPRØUT)

Input and Output

I/Ø	Symbolic Name or Location	Program Dimensions	Math Symbol	Data Dimensions or Units	Definition
I	NPRØUT				Output option key = 1 : output in single precision = 2 : output in double precision

Common storages used: 94 cells,/DCPCØM/,/ESTCØM/,/TRJCØM/,/DFMCØM/

Subroutines required: DEHA,DMVTRN,X2ØRBD

Usage

ØUTXPD accepts as input the data referenced in the labelled commons and writes the state on SYSØU1. The state relative to the central body (R,V) is assumed stored in RC(TRJCØM) in Earth's equator, equinox of 1950.0.

The output is controlled by NPRØUT and the array KEYØUT. The components of KEYØUT are examined in turn, and the state in output is single precision (NPRØUT=1) or in double precision (NPRØUT=2) in the coordinate system specified. The components of KEYØUT are the three-digit integers, CBA. The interpretations of the digits are:

A = 0 Cartesian coordinates
1 Spherical coordinates
2 Geographic coordinates
3 Orbital elements

B = 0 Earth's equator, equinox of 1950.0
1 Central body's equator of date
2 Central body-fixed

C = 0 Coordinates relative to the central body ICB.
1 Coordinates relative to Earth

```
$IBFTC MC13AK  XR3,M94,NODD,LIST
      SUBROUTINE OUTXPD (NPROUT)                                        OUTX0001
C     OUTPUTS POSITION AND VELOCITY                                     OUTX0002
C                                                                       OUTX0003
      DOUBLE PRECISION   DATAN2 ,DCOS ,DSIN ,DSQRT                      OUTX0004
C                                                                       OUTX0005
      COMMON            /DCPCOM/CDCP(900)                               OUTX0006
      DIMENSION          CBODY(8,11) ,KEYOUT(10)                        OUTX0007
      DOUBLE PRECISION   RTD                                            OUTX0008
      EQUIVALENCE       (CDCP( 17),CBODY ) ,(CDCP(761),KEYOUT)          OUTX0009
     1                 ,(CDCP(777),ICB   ) ,(CDCP(  7),RTD   )          OUTX0010
C                                                                       OUTX0011
      COMMON            /ESTCOM/CEST(804)                               OUTX0012
      DOUBLE PRECISION   EFEDAN(14)                                     OUTX0013
      EQUIVALENCE       (CEST(61),EFEDAN)                               OUTX0014
C                                                                       OUTX0015
      COMMON            /TRJCOM/CTRJ(246)                               OUTX0016
      DOUBLE PRECISION   RC(6),UTIMV                                    OUTX0017
      EQUIVALENCE       (CTRJ(151),RC    ) ,(CTRJ( 23),TC2D  )          OUTX0018
     1                 ,(CTRJ( 59),TB2C  ) ,(CTRJ(  3),UTIMV )          OUTX0019
C                                                                       OUTX0020
      COMMON            /DFMCOM/IFM(14),RFM(6,12)                       OUTX0021
     1                         ,DFM (4),BFM (577),SNT(2,102)            OUTX0022
      DOUBLE PRECISION   BFM,DFM,RFM                                    OUTX0023
C                                                                       OUTX0024
      COMMON             C,X,XO,XX,Y,A,B,CB                             OUTX0025
      DOUBLE PRECISION   C(3,3),X,XO(9),XX(6),Y(10),CB(10)              OUTX0026
C                                                                       OUTX0027
      DIMENSION          A(3),B(3)                                      OUTX0028
      DOUBLE PRECISION   COBL50,SOBL50                                  OUTX0029
      DIMENSION          AREF(6,5),BREF(3,4),CREF(2),KP(6),S(4)         OUTX0030
      EQUIVALENCE       (KP(1),KCP),(KP(2),KBP),(KP(3),KOUNT)           OUTX0031
     1                 ,(CP(4),KC ),(KP(5),KB ),(KP(6),KA )            OUTX0032
      EQUIVALENCE       (S(1),COBL50),(S(3),SOBL50)                     OUTX0033
C                                                                       OUTX0034
      DATA  AREF(1,1)/36H  X      Y      Z     DX     DY     DZ    /    OUTX0035
     1     ,AREF(1,2)/36H  R    LAT    LON      V    PTH    AZM    /    OUTX0036
     2     ,AREF(1,3)/36HALT    LAT    LON      V    PTH    AZM    /    OUTX0037
     3     ,AREF(1,4)/36HSMA    ECC    INC    LAN    APF    THE    /    OUTX0038
     4     ,AREF(1,5)/36HSLR    HEV    RCA                           /  OUTX0039
      DATA  BREF(1,1)/18H   EQUATOR OF 1950/                            OUTX0040
     1     ,BREF(1,2)/18H   EQUATOR OF DATE/                            OUTX0041
     2     ,BREF(1,3)/18H          ECLIPTIC/                            OUTX0042
     3     ,BREF(1,4)/18H        BODY-FIXED/                            OUTX0043
      DATA  CREF(1)  /12H CENTERED   /                                  OUTX0044
      DATA  S/O200677026177,O145771525474                               OUTX0045
     1       ,O177763136126,O144514406311/                              OUTX0046
  601 FORMAT(1X,3A6,83X,3A6)                                            OUTX0047
  611 FORMAT(6(2X,A3,E15.8))                                            OUTX0048
  602 FORMAT(1H )                                                       OUTX0049
  612 FORMAT(9X,3(4X,A3,D24.16),2X,3A6)                                 OUTX0050
C                                                                       OUTX0051
    1 CONTINUE                                                          OUTX0052
      DO 2 I=1,5                                                        OUTX0053
      KP(I) = 0                                                         OUTX0054
      CB(I)   = CBODY(I,ICB)                                            OUTX0055
    2 CB(I+5) = CBODY(I,3)                                              OUTX0056
      CB(2) = EFEDAN(ICB)                                               OUTX0057
      CB(7) = EFEDAN(3)                                                 OUTX0058
    4 CONTINUE                                                          OUTX0059
      KOUNT = KOUNT+1                                                   OUTX0060
      KA = KEYOUT(KOUNT)                                                OUTX0061
      IF (KA.LT.0) RETURN                                               OUTX0062
      KA = KA+111                                                       OUTX0063
      KC = KA/100                                                       OUTX0064
      KA = KA-KC*100                                                    OUTX0065
      KB = KA/10                                                        OUTX0066
      KA = KA-KB*10                                                     OUTX0067
C     SET UP LABELS                                                     OUTX0068
   20 CONTINUE                                                          OUTX0069
      IF (KC.NE.KCP) GO TO 24                                           OUTX0070
      IF (KB.NE.KBP) GO TO 26                                           OUTX0071
      DO 22 I=1,3                                                       OUTX0072
      A(I) = AREF(4,5)                                                  OUTX0073
   22 B(I) = AREF(4,5)                                                  OUTX0074
```

```
      N = NPROUT+2                                                      OUTX0075
      GO TO 30                                                          OUTX0076
   24 CONTINUE                                                          OUTX0077
      N = NPROUT                                                        OUTX0078
      III = 5*KC-4                                                      OUTX0079
      KCP = KC                                                          OUTX0080
   26 KBP = KB                                                          OUTX0081
      DO 27 I=1,3                                                       OUTX0082
      A(I) = CREF(I-1)                                                  OUTX0083
   27 B(I) = BREF(I,KB)                                                 OUTX0084
      A(1) = CB(III)                                                    OUTX0085
C     COMPUTE STATE RELATIVE TO DESIRED BODY                            OUTX0086
   30 CONTINUE                                                          OUTX0087
      M = 6                                                             OUTX0088
      IF (KC.NE.1) GO TO 34                                             OUTX0089
      DO 32 I=1,6                                                       OUTX0090
   32 XO(I) = RC(I)                                                     OUTX0091
      GO TO 38                                                          OUTX0092
   34 CONTINUE                                                          OUTX0093
      DO 36 I=1,6                                                       OUTX0094
   36 XO(I) = RC(I)-RFM(I,3)                                            OUTX0095
   38 GO TO (40,50,60,70) ,KB                                           OUTX0096
C     EQUATOR OF 1950                                                   OUTX0097
   40 CONTINUE                                                          OUTX0098
      DO 42 I=1,6                                                       OUTX0099
   42 XX(I) = XO(I)                                                     OUTX0100
      GO TO 99                                                          OUTX0101
C     EQUATOR OF DATE                                                   OUTX0102
   50 CONTINUE                                                          OUTX0103
      CALL DMVTRN (TC2D,XO,XX,1,2)                                      OUTX0104
      IF (KB.EQ.4) GO TO 71                                             OUTX0105
      GO TO 99                                                          OUTX0106
C     ECLIPTIC                                                          OUTX0107
   60 CONTINUE                                                          OUTX0108
      DO 62 I=1,4,3                                                     OUTX0109
      XX(I) = XO(I)                                                     OUTX0110
      X       = XO(I+1)                                                 OUTX0111
      XX(I+1) = X*COBL50+XO(I+2)*SOBL50                                 OUTX0112
   62 XX(I+2) =-X*SOBL50+XO(I+2)*COBL50                                 OUTX0113
      GO TO 99                                                          OUTX0114
C     BODY-FIXED                                                        OUTX0115
   70 CONTINUE                                                          OUTX0116
      IF (KC.NE.1.AND.ICB.NE.3) GO TO 50                                OUTX0117
      CALL DMVTRN (TB2C,XO,XX,2,2)                                      OUTX0118
      IF (KA.EQ.4) GO TO 99                                             OUTX0119
      GO TO 73                                                          OUTX0120
   71 CALL DEHA (UTIMV,DFM(4),X,CB(10))                                 OUTX0121
      Y(1) = DSIN(X)                                                    OUTX0122
      Y(2) = DCOS(X)                                                    OUTX0123
      DO 72 I=1,4,3                                                     OUTX0124
      Y(3) = XX(I)                                                      OUTX0125
      XX(I) = Y(2)*XX(I)+Y(1)*XX(I+1)                                   OUTX0126
   72 XX(I+1) = Y(2)*XX(I+1)-Y(1)*Y(3)                                  OUTX0127
   73 XX(4) = XX(4)+XX(2)*CB(III+4)                                     OUTX0128
      XX(5) = XX(5)-XX(1)*CB(III+4)                                     OUTX0129
   99 CONTINUE                                                          OUTX0130
      GO TO (100,200,300,400) ,KA                                       OUTX0131
C     CARTESIAN                                                         OUTX0132
  100 CONTINUE                                                          OUTX0133
      DO 102 I=1,6                                                      OUTX0134
  102 XO(I) = XX(I)                                                     OUTX0135
      GO TO 500                                                         OUTX0136
C     SPHERICAL                                                         OUTX0137
  200 CONTINUE                                                          OUTX0138
C     GEOGRAPHIC                                                        OUTX0139
  300 CONTINUE                                                          OUTX0140
      Y(3) = XX(1)*XX(1)+XX(2)*XX(2)                                    OUTX0141
      Y(4) = XX(3)*XX(3)                                                OUTX0142
      Y(6) = DSQRT(Y(3))                                                OUTX0143
      X = 0.D0                                                          OUTX0144
      IF (Y(3).EQ.0.D0) GO TO 310                                       OUTX0145
      C(1,3) =-XX(2)/Y(6)                                               OUTX0146
      C(2,3) = XX(1)/Y(6)                                               OUTX0147
      IF (KA.EQ.2) GO TO 308                                            OUTX0148
      X = XX(3)/Y(6)                                                    OUTX0149
```

```
C     COEFFICIENTS OF G(X)                                              OUTX0150
      Y(8) = CB(III+3)*CB(III+3)/Y(7)                                   OUTX0151
      Y(9) = 1.D0-Y(8)                                                  OUTX0152
      Y(1) = Y(9)*Y(9)                                                  OUTX0153
      Y(2) =-Y(9)*Y(6)/2.D0                                             OUTX0154
      Y(5) =-Y(7)*Y(3)                                                  OUTX0155
      Y(3) = Y(3)+Y(8)*Y(4)-Y(7)*Y(1)                                   OUTX0156
      Y(4) =-Y(7)*Y(2)                                                  OUTX0157
      Y(7) = CB(III+2)*CB(III+2)                                        OUTX0158
      X = CB(III+2)/DSQRT(1.D0+X*X/Y(8))                                OUTX0159
      Y(10) = ((4.D0*Y(1)*X+3.D0*Y(2))*X+2.D0*Y(3))*X+Y(4)              OUTX0160
C     ITERATE FOR G(X) = 0                                              OUTX0161
      DO 304 I=1,4                                                      OUTX0162
      Y(7) = (((Y(1)*X+Y(2))*X+Y(3))*X+Y(4))*X+Y(5)                     OUTX0163
  304 X = X-Y(7)/Y(10)                                                  OUTX0164
C     COMPUTE COORDINATES                                               OUTX0165
      IF (X.LE.CB(III+2)*1.D-14) GO TO 310                              OUTX0166
  308 Y(1) = XX(3)/(Y(6)-Y(9)*X)                                        OUTX0167
      C(3,2) = 1.D0/DSQRT(1.D0+Y(1)*Y(1))                               OUTX0168
      C(3,1) = Y(1)*C(3,2)                                              OUTX0169
      Y(2) = Y(1)*Y(8)*X                                                OUTX0170
      GO TO 312                                                         OUTX0171
  310 C(3,2) = X/XX(3)                                                  OUTX0172
      C(3,1) = 1.D0                                                     OUTX0173
      Y(2) = CB(III+3)                                                  OUTX0174
  312 XO(1) = DSQRT((Y(6)-X)**2+(XX(3)-Y(2))**2)                        OUTX0175
      XO(2) = RTD*DATAN2(C(3,1),C(3,2))                                 OUTX0176
      XO(3) = RTD*DATAN2(XX(2),XX(1))                                   OUTX0177
      C(1,1) = C(2,3)*C(3,2)                                            OUTX0178
      C(1,2) =-C(2,3)*C(3,1)                                            OUTX0179
      C(2,1) =-C(1,3)*C(3,2)                                            OUTX0180
      C(2,2) = C(1,3)*C(3,1)                                            OUTX0181
      C(3,3) = 0.D0                                                     OUTX0182
      CALL DMVTRN (C,XX(4),Y,2,1)                                       OUTX0183
      XO(6) = 0.D0                                                      OUTX0184
      XO(5) = 90.D0                                                     OUTX0185
      Y(4) = Y(2)*Y(2)+Y(3)*Y(3)                                        OUTX0186
      XO(4) = DSQRT(Y(4)+Y(1)*Y(1))                                     OUTX0187
      Y(5) = DSQRT(Y(4))                                                OUTX0188
      IF (Y(5).LE.1.D-14*XO(4)) GO TO 314                               OUTX0189
      XO(6) = RTD*DATAN2(Y(3),Y(2))                                     OUTX0190
      XO(5) = RTD*DATAN2(Y(1),Y(5))                                     OUTX0191
  314 IF (X.GE.Y(6)) XO(1) = -XO(1)                                     OUTX0192
      GO TO 500                                                         OUTX0193
C     ORBITAL                                                           OUTX0194
  400 CONTINUE                                                          OUTX0195
      M = 9                                                             OUTX0196
      CALL X2ORBD (XX,XO,CB(III+1))                                     OUTX0197
      DO 402 I=3,6                                                      OUTX0198
  402 XO(I) = RTD*XO(I)                                                 OUTX0199
C                                                                       OUTX0200
  500 GO TO (501,502,511,502) ,N                                        OUTX0201
  501 WRITE (6,601) A,B                                                 OUTX0202
  511 WRITE (6,611) (AREF(I,KA),XO(I),I=1,M)                            OUTX0203
      GO TO 4                                                           OUTX0204
  502 WRITE (6,602)                                                     OUTX0205
      WRITE (6,612) (AREF(I,KA),XO(I),I=1,3),A                          OUTX0206
     1              ,(AREF(I,KA),XO(I),I=4,6),B                         OUTX0207
      IF (M.LE.6) GO TO 4                                               OUTX0208
      WRITE (6,612) (AREF(I,KA),XO(I),I=7,9)                            OUTX0209
      GO TO 4                                                           OUTX0210
      END
```

Subroutine: ØVRLYD

Purpose: To allow a convenient means whereby data may be entered into double-precision arrays. A blank card or a negative index terminates the read-in process.

Calling Sequence: CALL ØVRLYD(C)

Input and Output:

I/Ø	Symbolic Name or Location	Program Dimensions	Math Symbol	Data Dimensions or Units	Definition
ø	C	d( )			Array into which double-precision data are to be read.

Common storages used: None

Subroutines required: None

Use of ØVRLYD

Double-precision input consists of two numbers, an integer k and a double-precision number x. The integer k is a subscript indicating the relative location in array C in which the value x is to be stored; thus $C(k) = x$. The integer field width is 3, (I3; integers must be right adjusted) and the value field width is 21, (D21.16). There may be up to three such pairs per card, running from Column 1 through Column 72, (3(I3,D21.16)).

If $k = 0$ and $x \neq 0$, x will be stored in the next successive location of C following the previous entry; if there were no previous entry, storage will start in C(1). If k and x are both zero, reading is terminated if they are the first pair on a card; otherwise the next card is processed. If k is negative, k is set positive, x is properly stored, and reading is terminated. Thus reading may be terminated by a card on which k_1 and x_1 are both zero, or by a negative value of k in any of the three integer fields.

All data read by ØVRLYD are written on the system output tape with zero or negative values of k replaced by the relative locations actually used.

251

```
$IBFTC MC13SY  XR3,M94,NODD,LIST
      SUBROUTINE OVRLYD(C)                                              OVRD0001
C     OVERLAYS DOUBLE PRECISION ARRAYS                                  OVRD0002
      DOUBLE PRECISION  C(1),     BUFF(3)                               OVRD0003
      DIMENSION         IND(3)                                          OVRD0004
  501 FORMAT(3(I3,D21.16))                                              OVRD0005
  601 FORMAT(53X,13HOVERLAY INPUT)                                      OVRD0006
  602 FORMAT(16X,I3,D25.16,5X,I3,D25.16,5X,I3,D25.16)                   OVRD0007
      WRITE(6,601)                                                      OVRD0008
      K=1                                                               OVRD0009
      LOC=0                                                             OVRD0010
    1 KOUNT=0                                                           OVRD0011
      READ(5,501) (IND(I),BUFF(I),I=1,3)                                OVRD0012
      IF(BUFF(1).EQ.0..AND.IND(1).EQ.0) GO TO 7                         OVRD0013
      DO 4 I=1,3                                                        OVRD0014
      IF(IND(I).NE.0) GO TO 2                                           OVRD0015
      IF(BUFF(I).EQ.0.) GO TO 6                                         OVRD0016
      IND(I)=LOC+1                                                      OVRD0017
    2 LOC=IABS(IND(I))                                                  OVRD0018
      KOUNT=KOUNT+1                                                     OVRD0019
    3 C(LOC)=BUFF(I)                                                    OVRD0020
      IF(IND(I).LT.0) GO TO 5                                           OVRD0021
    4 CONTINUE                                                          OVRD0022
      GO TO 6                                                           OVRD0023
    5 K=0                                                               OVRD0024
    6 WRITE(6,602) (IND(I),BUFF(I),I=1,KOUNT)                           OVRD0025
      IF(K.EQ.0) GO TO 7                                                OVRD0026
      GO TO 1                                                           OVRD0027
    7 RETURN                                                            OVRD0028
                                                                        OVRD0029
      END
```

Subroutine: ØYAL

Purpose: To output the station, beacon data read in by LAYØ. Output is in input units rather than internal units.

Calling Sequence: CALL ØYAL,(NCH,IRA,J,VARVEC)

Input and Output

I/ø	Symbolic Name or Location	Program Dimensions	Math Symbol	Data Dimensions or Units	Definition
I	NCH				NCH = 1, station data =2, beacon data
I	IRA	(11)			Measurement treatment keys.
I	J				Index in IRA indicationg which measurement error to output (J = 1 for stations not allowed).
I	VARVEC	(24)			Random, bias errors in the measurement.

Common storages used: None

Subroutines required: None

Organization of OYAL

The keys input to OYAL have different meanings for station and beacon entries.

1. STATION MEASUREMENTS (NCH=1)

IRA(1) = 1 C-Band measurements
2 Goddard Range - Range Rate measurements
3 S-Band measurements
4 DSIF measurements

IRA(2) = range treatment key
(3) = doppler treatment key
(4) = angle 1 treatment key
(5) = angle 2 treatment key
(6) = northing error treatment key
(7) = easting error treatment key
(8) = down error treatment key
(9) = clock bias treatment key
(10-11)= ignored by OYAL (J=10 or 11 not allowed)

J is the index on the entry in IRA(2-9) to be interrogated.

IRA(I)= 0 quantity not measured
1 bias and random for measurements
bias only for location errors
2 random only (measurements only)

VARVEC(J+6) = standard deviation for random error
(J+10)= bias error value

2. BEACON MEASUREMENTS (NCH=2)

IRA(1) = range treatment key
(2) = range rate key
(3) = angle 1 key
(4) = angle 2 key
(5) = time bias key

J is the index of the indicator to be considered.

IRA(I) = 0 no measurement
1 random and bias errors
2 random errors only

VARVEC(1) = period of range or range rate observations
(2) = period of angular measurements
(J+2) = random error standard deviation
(J+6) = bias error value

```
$IBFTC MC13OY  NOREF,M94,NODD,XR3
CMC13OY   SUBROUTINE OYAL (=LAYO BACKWARDS FOR OUTPUT)                  OYAL0001
      SUBROUTINE OYAL(NCH,IRA,J,VARVEC)                                 OYAL0002
      DIMENSION   IRA(11),      VARVEC(24),   ABC(4,20)                 OYAL0003
      DATA (ABC(1,I),I=1,12)/                                           OYAL0004
     124HERROR J=1 IN OYAL       ,                                      OYAL0005
     224HRANGE (MET)             ,                                      OYAL0006
     324HDOPPLER (CYCLES/SEC)    ,                                      OYAL0007
     424HAZIMUTH (MR)            ,                                      OYAL0008
     524HX-ANGLE (MR)            ,                                      OYAL0009
     624HX-ANGLE (MR)            ,                                      OYAL0010
     724HHOUR ANGLE (MR)         ,                                      OYAL0011
     824HELEVATION (MR)          ,                                      OYAL0012
     924HY-ANGLE (MR)            ,                                      OYAL0013
     124HY-ANGLE (MR)            ,                                      OYAL0014
     224HDECLINATION (MR)        ,                                      OYAL0015
     324HSTATION LATITUDE (MET-N)/                                      OYAL0016
      DATA (ABC(1,I),I=13,20)/                                          OYAL0017
     124HSTATION LONG. (MET-EAST),                                      OYAL0018
     224HSTATION ALTITUDE (MET-D),                                      OYAL0019
     324HCLOCK BIAS (SEC)        ,                                      OYAL0020
     424HRANGE (MET)             ,                                      OYAL0021
     524HRANGE RATE (MET/SEC)    ,                                      OYAL0022
     624HANGLE 1 (MR)            ,                                      OYAL0023
     724HANGLE 2 (MR)            ,                                      OYAL0024
     824HTIME ERROR (SEC)        /                                      OYAL0025
      IF(IRA(J)) 1,1000,1                                               OYAL0026
    1 CONTINUE                                                          OYAL0027
      RANDOM=0.                                                         OYAL0028
      BIAS=0.                                                           OYAL0029
      OPSEC=0.                                                          OYAL0030
      GO TO (21,41),NCH                                                 OYAL0031
   21 CONTINUE                                                          OYAL0032
      IF((IRA(1).EQ.4.AND.J.EQ.2).OR.(IRA(1).EQ.1.AND.J.EQ.3)) GO TO 997OYAL0033
      IF(IRA(J).NE.2) GO TO 101                                         OYAL0034
   92 Q=VARVEC(J+6)                                                     OYAL0035
      RANDOM=Q                                                          OYAL0036
      IF(J.EQ.3) GO TO 110                                              OYAL0037
      RANDOM=Q*1000.                                                    OYAL0038
      GO TO 110                                                         OYAL0039
  101 CONTINUE                                                          OYAL0040
      Q=VARVEC(J+10)                                                    OYAL0041
      BIAS=Q                                                            OYAL0042
      IF(J.EQ.9) GO TO 110                                              OYAL0043
      IF(J.GT.5) GO TO 105                                              OYAL0044
      IF(J.EQ.3) GO TO 92                                               OYAL0045
  102 BIAS=Q*1000.                                                      OYAL0046
      GO TO 92                                                          OYAL0047
  105 CONTINUE                                                          OYAL0048
      BIAS=Q*1000.                                                      OYAL0049
  110 CONTINUE                                                          OYAL0050
      NAB=J                                                             OYAL0051
      IF(J.GT.3) NAB=4*NAB+IRA(1)-13                                    OYAL0052
      IF(J.GT.5) NAB=J+6                                                OYAL0053
      GO TO 999                                                         OYAL0054
   41 CONTINUE                                                          OYAL0055
      NAB=J+15                                                          OYAL0056
      IF(IRA(J).EQ.2) GO TO 43                                          OYAL0057
   42 Q=VARVEC(J+6)                                                     OYAL0058
      BIAS=Q                                                            OYAL0059
      IF(J.EQ.5) GO TO 999                                              OYAL0060
      BIAS=Q*1000.                                                      OYAL0061
   43 CONTINUE                                                          OYAL0062
      Q=VARVEC(J+2)                                                     OYAL0063
      RANDOM=Q*1000.                                                    OYAL0064
   44 CONTINUE                                                          OYAL0065
      GO TO (45,45,46,46),J                                             OYAL0066
   45 OPSEC=VARVEC(1)                                                   OYAL0067
      GO TO 999                                                         OYAL0068
   46 OPSEC=VARVEC(2)                                                   OYAL0069
  999 CONTINUE                                                          OYAL0070
      IF(OPSEC.EQ.0.) GO TO 51                                          OYAL0071
      WRITE(6,600) (ABC(I,NAB),I=1,4),RANDOM,BIAS,OPSEC                 OYAL0072
  600 FORMAT(1H ,30X,4A6,10X,F8.5,7X,F8.4,8X,F9.2)                      OYAL0073
      GO TO 1000                                                        OYAL0074
```

```
   51 WRITE(6,600) (ABC(I,NAB),I=1,4),RANDOM,BIAS                    OYAL0075
      GO TO 1000                                                     OYAL0076
  997 IRA(J)=0                                                       OYAL0077
 1000 RETURN                                                         OYAL0078
      END                                                            OYAL0079
```

Subroutine: PARAB

Purpose: To fit a parabola through three points.

Calling Sequence: CALL PARAB(X,Y,A)

Input and Output

I/Ø	Symbolic Name or Location	Program Dimensions	Math Symbol	Data Dimensions or Units	Definition
I	X	(3)			X coordinates of the three points.
I	Y	(3)			Y coordinates of the three points.
Ø	A	(2)			Coefficients of the equation of the parabola $Y = A_2(X - X_2)^2 + A_1(X - X_2)+Y_2$

Common storages used: None

Subroutines required: None

```
$IBFTC MC13PB  NOREF,M94,NODD,XR3
CMC13PB     PARAB                                                    PARB0010
      SUBROUTINE  PARAB( X, Y, A)                                    PARB0020
      DIMENSION X(3), Y(3),A(2)                                      PARB0030
      DX1= X(1)-X(2)                                                 PARB0040
      DX2= X(3)-X(2)                                                 PARB0050
      D1= Y(1) -Y(2)                                                 PARB0060
      D2= Y(3)- Y(2)                                                 PARB0070
      DX12=DX1* DX1                                                  PARB0080
      DX22= DX2* DX 2                                                PARB0090
      DET =DX1 *DX22 - DX2* DX12                                     PARB0100
      A(1)=(DX22*D1 - DX12* D2)/ DET                                 PARB0110
      A(2)=(-DX2*D1 + DX1*D2)/ DET                                   PARB0120
      RETURN                                                         PARB0130
      END                                                            PARB0140
```

Subroutine: PERTD

Purpose: To compute the perturbing acceleration due to the celestial bodies other than the central body (see also PERTDP).

Calling Sequence: CALL PERTD (ICB, IBC, R, U, P, A)

I/ϕ	Symbolic Name of Location	Program Dimensions	Math Symbol	Data Dimensions or Units	Definition
I	ICB				Central body number
I	IBC	(11)			Include effect of body i only if IBC(i) $\neq 0$
I	R	d(3)	R	km	Position relative to the central body
I	U	d(12)	μ_i	km^3/sec^2	Gravitational constant array
I	P	d(6,12)	P_i	km	Positions of the celestial bodies relative to the central body
Iϕ	A	d(3)	A	km/sec^2	Perturbation acceleration

Common storages used: 18 cells.
Subroutines required: DDØT

```
$IBFTC MC132P  XR3,M94,NODD,LIST
      SUBROUTINE PERTD (ICB,IBC,R,U,P,A)                                PERT0001
C     N-BODY PERTURBATION ACCELERATION                                  PERT0002
      DOUBLE PRECISION  A(3),P(6,12),R(3),U(12)                         PERT0003
     1                 ,C,D,Q,DDOT,DSQRT                                PERT0004
      DIMENSION         IBC(11)                                         PERT0005
      COMMON            C(3),D(3),Q(3)                                  PERT0006
C                                                                       PERT0007
    1 DO 4 I=1,11                                                       PERT0008
      IF (IBC(I).EQ.0.OR.I.EQ.ICB) GO TO 4                              PERT0009
      DO 2 J=1,3                                                        PERT0010
      Q(J) = P(J,I)                                                     PERT0011
    2 D(J) = R(J)-Q(J)                                                  PERT0012
      C(3) = DDOT(D,D)                                                  PERT0013
      C(2) = DDOT(Q,Q)                                                  PERT0014
      C(2) = C(3)/C(2)                                                  PERT0015
      C(2) = C(2)*DSQRT(C(2))                                           PERT0016
      C(1) = C(3)*DSQRT(C(3))                                           PERT0017
      C(1) =-U(I)/C(1)                                                  PERT0018
      DO 3 J=1,3                                                        PERT0019
    3 A(J) = A(J)+C(1)*(D(J)+C(2)*Q(J))                                 PERT0020
    4 CONTINUE                                                          PERT0021
  999 RETURN                                                            PERT0022
      END
```

Subroutine: PERTDP

Purpose: To compute the n-body perturbation acceleration, excluding the central body, the gradient of the acceleration, and partial derivatives of the acceleration with respect to the physical constants.

Calling Sequence: Call PERTDP (ICB,IBC,R, U, P, A, AP, G, N)

Input and Output

I/Ø	Symbolic Name or Location	Program Dimensions	Math Symbol	Data Dimensions or Units	Definition
I	ICB				Central body number.
I	IBC	(11)			Include effect of body i only if IBC(i) $\neq$ 0. Compute $\partial A/\partial\mu$ if IBC(i) < 0.
I	R	d(3)	R	km	Position relative to the central body.
I	U	d(12)	μ_i	km^3/sec^2	Gravitational constant array.
I	P	d(6,12)	P_i	km	Positions of the celestial bodies relative to the central body.
IØ	A	d(3)	A	km/sec^2	Perturbation acceleration.
Ø	AP	d(3,11)	$\partial A/\partial\mu_i$	$1/km^2$	Partial derivatives
Ø	G	d(3,3)	$\nabla_R A$	$1/sec^2$	Gradient of the acceleration.
I	N				= 0 compute acceleration only. $\neq$ 0 compute acceleration and gradient.

Common storages used: 54 cells.
Subroutines required: DDØT

Method:

The acceleration vector, A_i, of a space vehicle relative to the central body (body ICB) due to the inverse-square attraction of central body i is

$$A_i = -\mu_i \left(\frac{\Delta_i}{\delta^3} + \frac{P_i}{p^3} \right)$$

$$\Delta_i = R - P_i$$

where

μ_i = gravitational constant for body i

P_i = position of body i relative to the central body

R = position of the vehicle relative to the central body

$p = | P_i |$

$\delta = | \Delta_i |$

The subroutine sums the A_i for all bodies for which IBC(i) $\neq 0$ except i = IBC, and returns the sum in A. If $N \neq 0$, the gradient of A with respect to R, $\nabla_R A$, is returned in G. It is computed from

$$\nabla_R A = \sum \nabla_R A_i$$

$$\nabla_R A_i = -\frac{\mu_i}{\delta^3} \left(I - \frac{3\Delta_i \Delta_i^T}{\delta^2} \right)$$

where the summation includes all bodies (including the central body) for which IBC(i) $\neq 0$.

For all $i \neq 3$, 10 for which IBC(i) < 0, the partial derivatives

$$\frac{\partial A}{\partial \mu_i} = \frac{1}{\mu_i} A_i$$

are returned in consecutive columns of AP. If IBC(10) < 0, the a.u. is assumed to vary with μ_{10} in such a way that the period of the Earth remains constant. That is,

$$\frac{\partial A}{\partial \mu_{10}} = \frac{1}{\mu_{10}} A_{10} + \frac{\partial A}{\partial (a.u.)} \frac{a.u.}{3\mu_{10}}$$

Similarly, if IBC(3) < 0, the lunar ephemeris scale factor, R_E, is assumed to vary with μ_3 in such a way thatthe lunar period is constant. That is,

$$\frac{\partial A}{\partial \mu_3} = \frac{1}{\mu_3} A_3 + \frac{\partial A}{\partial (R_E)} \frac{R_E}{3\mu_3}$$

The partial derivatives with respect to the scaling factors are

$$\frac{(a.u.)}{3} \frac{\partial A}{\partial (a.u.)} = \sum_{i \neq 3,11} \mu_i \{(a_i - b_i)P_i + b_i P_{12} + c_i \Delta_i\}$$

$$\frac{(R_E)}{3} \frac{\partial A}{\partial (R_E)} = \sum_{i \neq 3,11} \mu_i \left\{ \frac{1}{p^5}(P_i \cdot P_{12})P_i + b_i P_{12} - \frac{1}{\delta^5}(\Delta_i \cdot P_{12})\Delta_i \right\}$$

$$+ \mu_{11} \left\{ \frac{1}{p^3} - b_{11})P_{11} + \frac{1}{\delta^5}(\Delta_{11} \cdot P_{11})\Delta_{11} \right\}$$

where

$$a_i = \frac{1}{p^5}(p^2 - P_i \cdot P_{12})$$

$$b_i = \frac{1}{3}\left(\frac{1}{p^3} - \frac{1}{\delta^3}\right)$$

$$c_1 = \frac{1}{\delta^5}(\Delta_i \cdot P_i - \Delta_i \cdot P_{12})$$

```
$IBFTC MC132Q  XR3,M94,NODD,LIST
      SUBROUTINE PERTDP (ICB,IBC,R,U,P,A,AP,G,N)                        PRTP0001
C     N-BODY PERTURBATION ACCELERATION                                  PRTP0002
      DOUBLE PRECISION   A(3),AP(3,11),G(3,3),P(6,12),R(3),U(12)        PRTP0003
      DIMENSION          IBC(11)                                        PRTP0004
      COMMON             C(12),D(3),Q(3),T(3,3)                         PRTP0005
      DOUBLE PRECISION   C,D,Q,T,DDOT,DSQRT                             PRTP0006
C                                                                       PRTP0007
    1 IF (N.EQ.0) GO TO 3                                               PRTP0008
      C(12) = 0.D0                                                      PRTP0009
      DO 2 I=1,3                                                        PRTP0010
      DO 2 J=1,3                                                        PRTP0011
    2 T(I,J) = 0.D0                                                     PRTP0013
    3 L = 1                                                             PRTP0014
      L3 = 0                                                            PRTP0015
      L10 = 0                                                           PRTP0016
C                                                                       PRTP0017
   10 DO 49 M=1,11                                                      PRTP0018
      IF (IBC(M).EQ.0) GO TO 49                                         PRTP0019
      DO 11 I=1,3                                                       PRTP0020
      Q(I) = P(I,M)                                                     PRTP0021
   11 D(I) = R(I)-Q(I)                                                  PRTP0022
      C(7) = DDOT(D,D)                                                  PRTP0023
      C(8) = DDOT(Q,Q)                                                  PRTP0024
      C(5) = C(7)/C(8)                                                  PRTP0025
      C(6) = C(7)*DSQRT(C(7))                                           PRTP0026
      C(9) = C(5)*DSQRT(C(5))                                           PRTP0027
      C(1) = C(9)-1.D0                                                  PRTP0028
      C(2) =-1.D0/C(6)                                                  PRTP0029
      C(3) = U(M)/C(6)                                                  PRTP0030
      C(4) = C(3)/C(7)                                                  PRTP0031
C                                                                       PRTP0032
   20 DO 21 I=1,3                                                       PRTP0033
   21 T(I,1) = C(2)*(R(I)+C(1)*Q(I))                                    PRTP0034
      IF (IBC(M).GE.0) GO TO 23                                         PRTP0035
      DO 22 I=1,3                                                       PRTP0036
   22 AP(I,L) = T(I,1)                                                  PRTP0037
      L = L+1                                                           PRTP0038
   23 IF (M.EQ.ICB) GO TO 25                                            PRTP0039
      DO 24 I=1,3                                                       PRTP0040
   24 A(I) = A(I)+U(M)*T(I,1)                                           PRTP0041
   25 IF (N.EQ.0) GO TO 49                                              PRTP0042
C                                                                       PRTP0043
   30 C(11) = C(3)*C(1)/3.D0                                            PRTP0044
      C( 1) = C(3)*C(9)                                                 PRTP0045
      C( 2) = C(4)*DDOT(D,Q)                                            PRTP0046
      C( 6) =-C(3)*DDOT(D,P(1,12))/C(7)                                 PRTP0047
      C( 5) = C(1)*DDOT(Q,P(1,12))/C(8)                                 PRTP0048
      C( 1) = C(1)-C(11)                                                PRTP0049
      IF (M.EQ.3) GO TO 32                                              PRTP0050
      IF (M.EQ.11) GO TO 31                                             PRTP0051
      C(12) = C(12)+C(11)                                               PRTP0052
      C( 1) = C(1)-C(5)                                                 PRTP0053
      C( 2) = C(2)+C(6)                                                 PRTP0054
      IF (M.NE.10) GO TO 33                                             PRTP0055
      IF (IBC(10).GE.0) GO TO 33                                        PRTP0056
      L10 = L-1                                                         PRTP0057
      GO TO 33                                                          PRTP0058
   31 C( 5) = C(1)                                                      PRTP0059
      C( 6) = C(2)                                                      PRTP0060
      C( 1) = 0.D0                                                      PRTP0061
      C( 2) = 0.D0                                                      PRTP0062
      GO TO 33                                                          PRTP0063
   32 IF (IBC(3).GE.0) GO TO 40                                         PRTP0064
      L3 = L-1                                                          PRTP0065
      GO TO 40                                                          PRTP0066
   33 DO 34 I=1,3                                                       PRTP0067
      T(I,2) = T(I,2)+C(1)*Q(I)+C(2)*D(I)                               PRTP0068
   34 T(I,3) = T(I,3)+C(5)*Q(I)+C(6)*D(I)                               PRTP0069
C                                                                       PRTP0070
   40 DO 41 I=1,3                                                       PRTP0071
      C(5) = 3.D0*C(4)*D(I)                                             PRTP0072
      G(I,I) = G(I,I)-C(3)                                              PRTP0073
      DO 41 J=1,3                                                       PRTP0074
   41 G(I,J) = G(I,J)+C(5)*D(J)                                         PRTP0075
```

```
   49 CONTINUE                                                          PRTP0076
C                                                                       PRTP0077
   50 L=L10                                                             PRTP0078
      C(11) = U(10)                                                     PRTP0079
      DO 53 I=1,2                                                       PRTP0080
      IF (L.EQ.0) GO TO 52                                              PRTP0081
      DO 51 J=1,3                                                       PRTP0082
   51 AP(J,L) = AP(J,L)+(T(J,I+1)+C(12)*P(J,12))/C(11)                  PRTP0083
   52 L = L3                                                            PRTP0084
   53 C(11) = U(3)                                                      PRTP0085
C                                                                       PRTP0086
  999 RETURN                                                            PRTP0087
      END
```

Subroutine: PØLYFT

Purpose: Tests an arc (station pass) of edited data with walking polynomials;tags outliers. Outputs data in edited-data format on tape 12.

Calling Sequence: CALL PØLYFT(NPCNT)

Input and Output

I/ø	Symbolic Name or Location	Program Dimensions	Math Symbol	Data Dimensions or Units	Definition
I	NPCNT				Number of time points for which data exists.

Common storages used: /TSTCØM/,/ØUTCØM/,/DATCØM/,/MESCØM/,/CRØCØM/

Subroutines required: CRØSIM

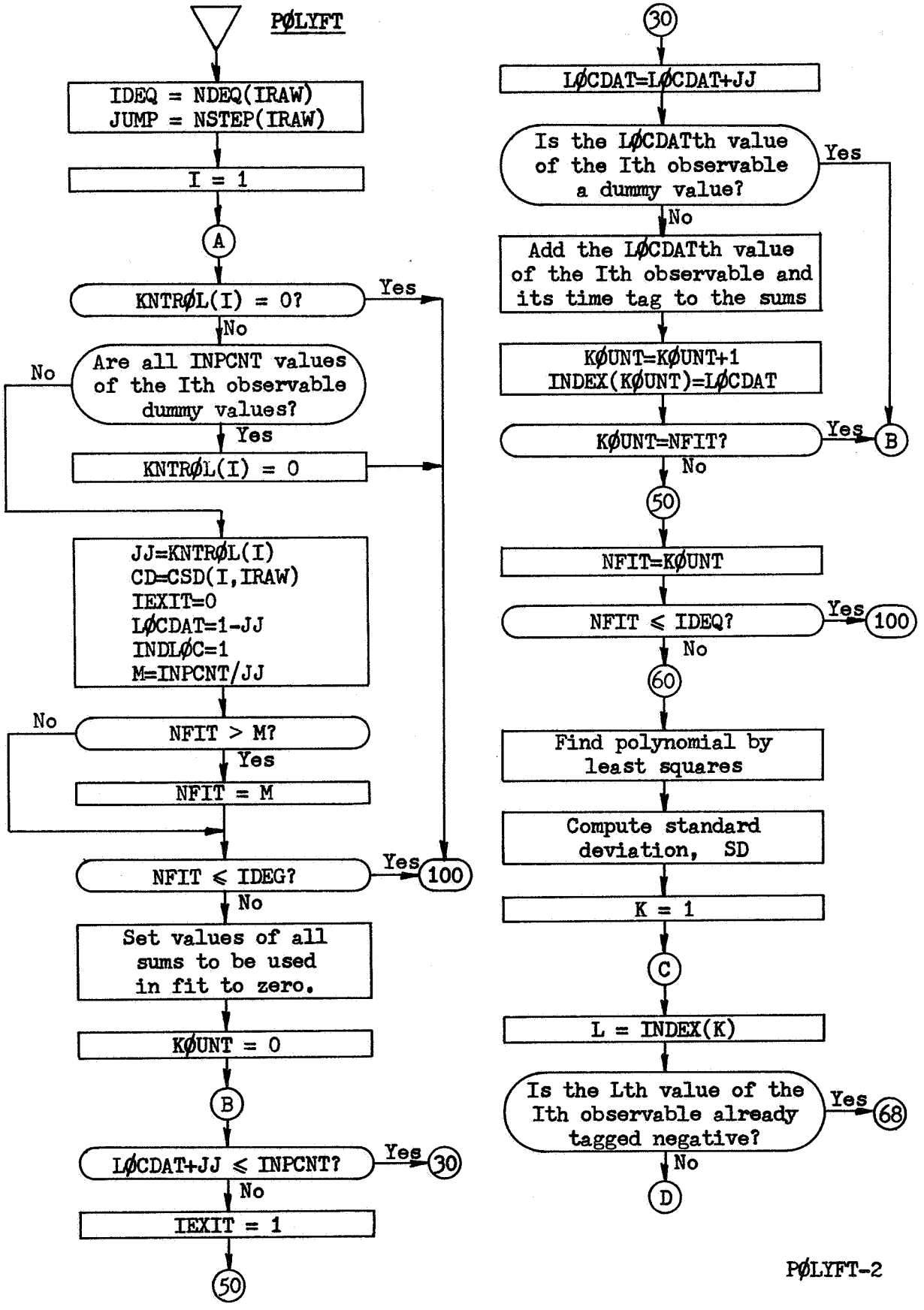
PØLYFT
IDEQ = NDEQ(IRAW)
JUMP = NSTEP(IRAW)
I = 1
A
KNTRØL(I) = 0?
Yes
No
Are all INPCNT values of the Ith observable dummy values?
No
Yes
KNTRØL(I) = 0
JJ=KNTRØL(I)
CD=CSD(I,IRAW)
IEXIT=0
LØCDAT=1-JJ
INDLØC=1
M=INPCNT/JJ
NFIT > M?
No
Yes
NFIT = M
NFIT ≤ IDEG?
Yes
100
No
Set values of all sums to be used in fit to zero.
KØUNT = 0
B
LØCDAT+JJ ≤ INPCNT?
Yes
30
No
IEXIT = 1
50
30
LØCDAT=LØCDAT+JJ
Is the LØCDATth value of the Ith observable a dummy value?
Yes
No
Add the LØCDATth value of the Ith observable and its time tag to the sums
KØUNT=KØUNT+1
INDEX(KØUNT)=LØCDAT
KØUNT=NFIT?
Yes
B
No
50
NFIT=KØUNT
NFIT ≤ IDEQ?
Yes
100
No
60
Find polynomial by least squares
Compute standard deviation, SD
K = 1
C
L = INDEX(K)
Is the Lth value of the Ith observable already tagged negative?
Yes
68
No
D

PØLYFT-2

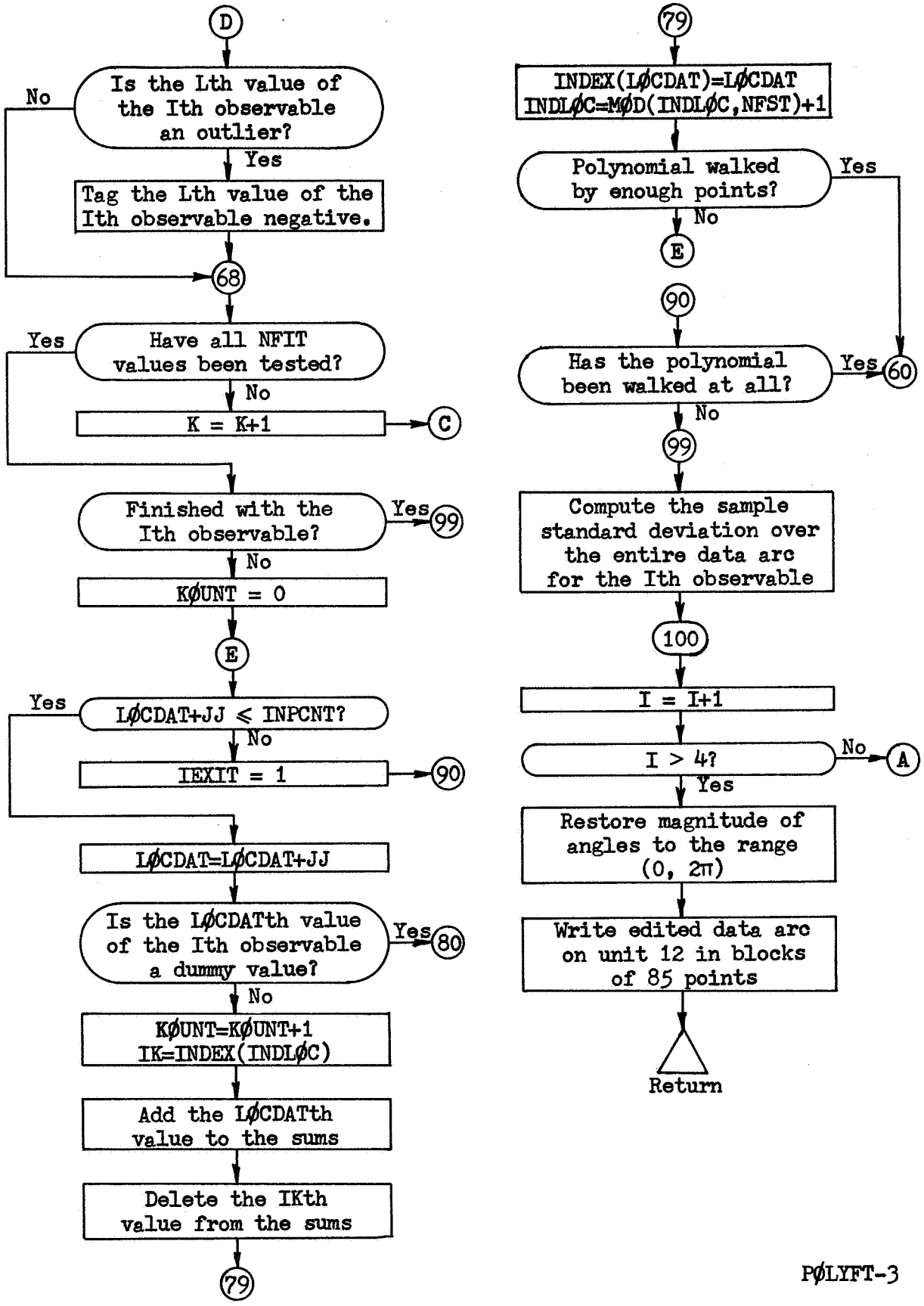
D
Is the Lth value of the Ith observable an outlier?
No
Yes
Tag the Lth value of the Ith observable negative.
68
Have all NFIT values been tested?
Yes
No
K = K+1
C
Finished with the Ith observable?
Yes
99
No
KØUNT = 0
E
LØCDAT+JJ ≤ INPCNT?
Yes
No
IEXIT = 1
90
LØCDAT=LØCDAT+JJ
Is the LØCDATth value of the Ith observable a dummy value?
Yes
80
No
KØUNT=KØUNT+1
IK=INDEX(INDLØC)
Add the LØCDATth value to the sums
Delete the IKth value from the sums
79
79
INDEX(LØCDAT)=LØCDAT
INDLØC=MØD(INDLØC,NFST)+1
Polynomial walked by enough points?
Yes
No
E
90
Has the polynomial been walked at all?
Yes
60
No
99
Compute the sample standard deviation over the entire data arc for the Ith observable
100
I = I+1
I > 4?
No
A
Yes
Restore magnitude of angles to the range (0, 2π)
Write edited data arc on unit 12 in blocks of 85 points
Return

PØLYFT-3

```
$IBFTC MC134R  M94,NODD,XR3
CMC134R   TESTS DATA WITH WALKING POLYNOMIAL AND TAGS OUTLIERS
      SUBROUTINE POLYFT(NPCNT)
      COMMON  /TSTCOM/CTEST(400)
      DOUBLE PRECISION  FINISH(10)
      DIMENSION   NYR(10),      NPTS(10),     NSTEP(10),    NDEG(10)
     1,           CSD(4,10),    INTROL(4)
      EQUIVALENCE              (CTEST(1),NYR),       (CTEST(11),NPTS)
     1,  (CTEST(21),NSTEP),    (CTEST(31),NDEG),     (CTEST(41),CSD)
     2,  (CTEST(81),IRAW),     (CTEST(82),INTROL),   (CTEST(87),FINISH)
C
      COMMON  /OUTCOM/COUT(40)
      DOUBLE PRECISION  ONTIME,TFIRST,TLAST
      DIMENSION   NB(4),        SSD(4)
      EQUIVALENCE              (COUT(5),NRCD),       (COUT(6),NPTBLK)
     1,  (COUT(7),KONT),       (COUT(13),ONTIME),    (COUT(15),TFIRST)
     2,  (COUT(17),TLAST),     (COUT(33),NB),        (COUT(37),SSD)
C
      COMMON  /DATCOM/CDAT(2400)
      DOUBLE PRECISION TIMTAG(300)
      DIMENSION   TXTRA(300),   IQ(300),      XANG(300),    YANG(300)
     1,           RANGE(300),   DOP(300),     RDAT(300,4)
      EQUIVALENCE              (CDAT(1),TIMTAG),     (CDAT(601),TXTRA)
     1,  (CDAT(901),IQ),       (CDAT(1201),XANG),    (CDAT(1501),YANG)
     2,  (CDAT(1801),RANGE),   (CDAT(2101),DOP),     (XANG,RDAT)
C
      COMMON  /MESCOM/CMES(510)
      DIMENSION   IIQ(85),      TOUT(85),     ANG1(85),     ANG2(85)
     1,           ROUT(85),     DOUT(85)
      EQUIVALENCE              (CMES(1),IIQ),        (CMES(86),TOUT)
     1,  (CMES(171),ANG1),     (CMES(256),ANG2),     (CMES(341),ROUT)
     2,  (CMES(426),DOUT)
C
      COMMON  /CROCOM/CCRO(86)
      DOUBLE PRECISION  B(6,7)
      EQUIVALENCE              (CCRO(1),B),          (CCRO(85),KK)
     1,  (CCRO(86),ISING)
C
      DOUBLE PRECISION  SUMX(10),      SUMY(2),       SUMXY(5)
     1,  COEFF(6)
      DOUBLE PRECISION  AM,       AP,       CD,       DIFF,     SD
     1,       TXM,      TXP,      GSD,      PTS
      DIMENSION   INDEX(20),    KNTROL(4)
      DOUBLE PRECISION DSQRT
C
      DATA TEST/-.12345678E20/
      INPCNT=NPCNT
      IDEG=NDEG(IRAW)
      JUMP=NSTEP(IRAW)
C     FIT DATA COLUMNS, ONE AT A TIME
      DO 100 I=1,4
      KNTROL(I)=INTROL(I)
      SSD(I)=TEST
      IF(KNTROL(I).EQ.0) GO TO 100
      JJ=KNTROL(I)
C     TEST FOR VALID DATA.  RESET KNTROL IF NECESSARY
      DO 10 K=1,INPCNT,JJ
      IF(RDAT(K,I).NE.TEST) GO TO 20
   10 CONTINUE
      KNTROL(I)=0
      GO TO 100
   20 CONTINUE
      CD=CSD(I,IRAW)
      IEXIT=0
      LOCDAT=1-JJ
      INDLOC=1
      NFIT=NPTS(IRAW)
C     TEST WHETHER NFIT POINTS ARE AVAILABLE
      M=INPCNT/JJ
      IF(NFIT.GT.M) NFIT=M
      IF(NFIT.LE.IDEG) GO TO 100
C     ENOUGH POINTS ARE AVAILABLE IF VALID
      SUMY(1)=0.D0
      SUMY(2)=0.D0
      DO 21 J=1,IDEG
```

```
      SUMXY(J)=0.D0                                                     POLY0075
      SUMX(2*J)=0.D0                                                    POLY0076
   21 SUMX(2*J-1)=0.D0                                                  POLY0077
C     FORM INITIAL SUMS ON FIRST NFIT POINTS                            POLY0078
      KOUNT=0                                                           POLY0079
      DO 40 K=1,INPCNT,JJ                                               POLY0080
      IF(LOCDAT+JJ.LE.INPCNT) GO TO 30                                  POLY0081
      IEXIT=1                                                           POLY0082
      GO TO 50                                                          POLY0083
   30 LOCDAT=LOCDAT+JJ                                                  POLY0084
      IF(RDAT(LOCDAT,I).EQ.TEST) GO TO 40                               POLY0085
      KOUNT=KOUNT+1                                                     POLY0086
      INDEX(KOUNT)=LOCDAT                                               POLY0087
      AP=ABS(RDAT(LOCDAT,I))                                            POLY0088
      SUMY(1)=SUMY(1)+AP                                                POLY0089
      SUMY(2)=SUMY(2)+AP*AP                                             POLY0090
      TXP=TXTRA(LOCDAT)                                                 POLY0091
      SUMXY(1)=SUMXY(1)+TXP*AP                                          POLY0092
      SUMX(1)=SUMX(1)+TXP                                               POLY0093
      SUMX(2)=SUMX(2)+TXP*TXP                                           POLY0094
      IF(IDEG.EQ.1) GO TO 39                                            POLY0095
      DO 31 J=2,IDEG                                                    POLY0096
      TXP=TXP*TXTRA(LOCDAT)                                             POLY0097
      SUMXY(J)=SUMXY(J)+TXP*AP                                          POLY0098
      SUMX(2*J)=SUMX(2*J)+TXP*TXP                                       POLY0099
   31 SUMX(2*J-1)=SUMX(2*J-1)+TXP*TXTRA(LOCDAT)                         POLY0100
   39 IF(KOUNT.EQ.NFIT) GO TO 50                                        POLY0101
   40 CONTINUE                                                          POLY0102
C     TEST IF ENOUGH VALID POINTS WERE FOUND                            POLY0103
   50 NFIT=KOUNT                                                        POLY0104
      IF(NFIT.LE.IDEG) GO TO 100                                        POLY0105
C     WE HAVE AT LEAST IDEG+1 VALID POINTS.  (EXACTLY NFIT POINTS.)     POLY0106
      PTS=0.                                                            POLY0107
      GSD=0.                                                            POLY0108
   60 CONTINUE                                                          POLY0109
      KK=IDEG+1                                                         POLY0110
      DO 61 K=1,KK                                                      POLY0111
      DO 61 L=K,KK                                                      POLY0112
      M=K+L-2                                                           POLY0113
      IF(M.EQ.0) GO TO 61                                               POLY0114
      B(K,L)=SUMX(M)                                                    POLY0115
      B(L,K)=SUMX(M)                                                    POLY0116
   61 CONTINUE                                                          POLY0117
      DO 62 K=2,KK                                                      POLY0118
   62 B(K,KK+1)=SUMXY(K-1)                                              POLY0119
      B(1,1)=NFIT                                                       POLY0120
      B(1,KK+1)=SUMY(1)                                                 POLY0121
C     SOLVE FOR POLYNOMIAL COEFFICIENTS                                 POLY0122
C     THIS SUBROUTINE USES CROUT-S METHOD                               POLY0123
      CALL CROSIM                                                       POLY0124
      IF(ISING.NE.0) GO TO 69                                           POLY0125
      DO 63 K=1,KK                                                      POLY0126
   63 COEFF(K)=B(K,KK+1)                                                POLY0127
C     COMPUTE STANDARD DEVIATIONS                                       POLY0128
      AP=NFIT                                                           POLY0129
      SD=SUMY(2)+COEFF(1)*(AP*COEFF(1)-2.*SUMY(1))+COEFF(2)*(COEFF(2)*SUPOLY0130
     1MX(2)+2.*(COEFF(1)*SUMX(1)-SUMXY(1)))                             POLY0131
      IF(IDEG.EQ.1) GO TO 65                                            POLY0132
      SD=SD+COEFF(3)*(COEFF(3)*SUMX(4)+2.*(COEFF(2)*SUMX(3)+COEFF(1)*SUMPOLY0133
     1X(2)-SUMXY(2)))                                                   POLY0134
      IF(IDEG.EQ.2) GO TO 65                                            POLY0135
      SD=SD+COEFF(4)*(COEFF(4)*SUMX(6)+2.*(COEFF(3)*SUMX(5)+COEFF(2)*SUMPOLY0136
     1X(4)+COEFF(1)*SUMX(3)-SUMXY(3)))                                  POLY0137
      IF(IDEG.EQ.3) GO TO 65                                            POLY0138
      SD=SD+COEFF(5)*(COEFF(5)*SUMX(8)+2.*(COEFF(4)*SUMX(7)+COEFF(3)*SUMPOLY0139
     1X(6)+COEFF(2)*SUMX(5)+COEFF(1)*SUMX(4)-SUMXY(4)))                 POLY0140
      IF(IDEG.EQ.4) GO TO 65                                            POLY0141
      SD=SD+COEFF(6)*(COEFF(6)*SUMX(10)+2.*(COEFF(5)*SUMX(9)+COEFF(4)*SUPOLY0142
     1MX(8)+COEFF(3)*SUMX(7)+COEFF(2)*SUMX(6)+COEFF(1)*SUMX(5)-SUMXY(5))POLY0143
     2)                                                                 POLY0144
   65 GSD=GSD+SD                                                        POLY0145
      PTS=PTS+AP                                                        POLY0146
      SD=DSQRT(DABS(SD/AP))                                             POLY0147
C     TEST FOR OUTLIERS                                                 POLY0148
      DO 68 K=1,NFIT                                                    POLY0149
```

```
      L=INDEX(K)                                                        POLY0150
      IF(RDAT(L,I).LT.0.) GO TO 68                                      POLY0151
      DIFF=RDAT(L,I)-COEFF(1)                                           POLY0152
      TXM=1.D0                                                          POLY0153
      DO 66 M=1,IDEG                                                    POLY0154
      TXM=TXM*TXTRA(L)                                                  POLY0155
   66 DIFF=DIFF-TXM*COEFF(M+1)                                          POLY0156
      IF(DABS(DIFF).GT.SD*CD) RDAT(L,I)=-RDAT(L,I)                      POLY0157
   68 CONTINUE                                                          POLY0158
   69 IF(IEXIT.EQ.1) GO TO 99                                           POLY0159
C     HERE WE WALK THE POLYNOMIAL                                       POLY0160
      KOUNT=0                                                           POLY0161
      DO 80 K=1,INPCNT                                                  POLY0162
      IF(LOCDAT+JJ.LE.INPCNT) GO TO 70                                  POLY0163
      IEXIT=1                                                           POLY0164
      GO TO 90                                                          POLY0165
   70 LOCDAT=LOCDAT+JJ                                                  POLY0166
      IF(RDAT(LOCDAT,I).EQ.TEST) GO TO 80                               POLY0167
      KOUNT=KOUNT+1                                                     POLY0168
      IK=INDEX(INDLOC)                                                  POLY0169
      AP=ABS(RDAT(LOCDAT,I))                                            POLY0170
      AM=ABS(RDAT(IK,I))                                                POLY0171
      SUMY(1)=SUMY(1)+AP-AM                                             POLY0172
      SUMY(2)=SUMY(2)+AP*AP-AM*AM                                       POLY0173
      TXP=TXTRA(LOCDAT)                                                 POLY0174
      TXM=TXTRA(IK)                                                     POLY0175
      SUMXY(1)=SUMXY(1)+AP*TXP-AM*TXM                                   POLY0176
      SUMX(1)=SUMX(1)+TXP-TXM                                           POLY0177
      SUMX(2)=SUMX(2)+TXP*TXP-TXM*TXM                                   POLY0178
      IF(IDEG.EQ.1) GO TO 79                                            POLY0179
      DO 71 J=2,IDEG                                                    POLY0180
      TXP=TXP*TXTRA(LOCDAT)                                             POLY0181
      TXM=TXM*TXTRA(IK)                                                 POLY0182
      SUMXY(J)=SUMXY(J)+TXP*AP-TXM*AM                                   POLY0183
      SUMX(2*J)=SUMX(2*J)+TXP*TXP-TXM*TXM                               POLY0184
   71 SUMX(2*J-1)=SUMX(2*J-1)+TXP*TXTRA(LOCDAT)-TXM*TXTRA(IK)           POLY0185
   79 INDEX(INDLOC)=LOCDAT                                              POLY0186
      INDLOC=MOD(INDLOC,NFIT)+1                                         POLY0187
      IF(KOUNT.EQ.JUMP) GO TO 60                                        POLY0188
   80 CONTINUE                                                          POLY0189
   90 IF(KOUNT.NE.0) GO TO 60                                           POLY0190
   99 SSD(I)=DSQRT(DABS(GSD/PTS))                                       POLY0191
  100 CONTINUE                                                          POLY0192
C     RESTORE ANGLES TO RANGE ZERO TO TWO PI                            POLY0193
      DO 106 I=1,2                                                      POLY0194
      JJ=KNTROL(I)                                                      POLY0195
      IF(JJ.EQ.0) GO TO 106                                             POLY0196
      DO 105 K=1,INPCNT,JJ                                              POLY0197
      IF(RDAT(K,I).EQ.TEST) GO TO 105                                   POLY0198
      RDAT(K,I)=RDAT(K,I)-FLOAT(IFIX(RDAT(K,I)/6.28318531))*6.28318531  POLY0199
  105 CONTINUE                                                          POLY0200
C     FINISHED FITTING.  NOW OUTPUT DATA IN SUITABLE BLOCKS             POLY0201
  106 CONTINUE                                                          POLY0202
      DO 110 I=1,4                                                      POLY0203
  110 NB(I)=0                                                           POLY0204
      KOUNT=0                                                           POLY0205
      NRCD=0                                                            POLY0206
      KONT=0                                                            POLY0207
      I=0                                                               POLY0208
      TFIRST=TIMTAG(1)                                                  POLY0209
  111 I=I+1                                                             POLY0210
      KOUNT=KOUNT+1                                                     POLY0211
      IIQ(KOUNT)=IQ(I)                                                  POLY0212
      TOUT(KOUNT)=TIMTAG(I)-ONTIME                                      POLY0213
      ANG1(KOUNT)=XANG(I)                                               POLY0214
      ANG2(KOUNT)=YANG(I)                                               POLY0215
      ROUT(KOUNT)=RANGE(I)                                              POLY0216
      DOUT(KOUNT)=DOP(I)                                                POLY0217
      IF(KOUNT.LT.85) GO TO 140                                         POLY0218
      ASSIGN 129 TO KOP                                                 POLY0219
      GO TO 141                                                         POLY0220
  129 TFIRST=TIMTAG(I+1)                                                POLY0221
      KONT=1                                                            POLY0222
      KOUNT=0                                                           POLY0223
      DO 130 L=1,4                                                      POLY0224
```

```
130 NB(L)=0                                                    POLY0225
140 IF(I.LT.INPCNT) GO TO 111                                  POLY0226
    IF(KOUNT.EQ.0) GO TO 999                                   POLY0227
    ASSIGN 999 TO KOP                                          POLY0228
141 NRCD=NRCD+1                                                POLY0229
    NPTBLK=KOUNT                                               POLY0230
    TLAST=TIMTAG(I)                                            POLY0231
    DO 150 L=1,KOUNT                                           POLY0232
    IF(ANG1(L).LT.0.) NB(1)=NB(1)+1                            POLY0233
    IF(ANG2(L).LT.0.) NB(2)=NB(2)+1                            POLY0234
    IF(ROUT(L).LT.0.) NB(3)=NB(3)+1                            POLY0235
150 IF(DOUT(L).LT.0.) NB(4)=NB(4)+1                            POLY0236
    WRITE(12) COUT                                             POLY0237
    WRITE(12) CMES                                             POLY0238
    GO TO KOP,(129,999)                                        POLY0239
999 RETURN                                                     POLY0240
    END                                                        POLY0241
```

Subroutine: PSEUDØ

Purpose: Given a real symmetric matrix, finds the unique pseudo-inverse matrix described in the discussion. (As programmed, PSEUDØ will handle matrices with dimension no greater than 6 X 6. This matrix may be imbedded as the upper left corner of a larger matrix.)

Calling Sequence: CALL PSEUDØ(ATA,N,M,EPS).

Input and Output

I/Ø	Symbolic Name or Location	Program Dimensions	Math Symbol	Data Dimensions or Units	Definition
I/Ø	ATA	d(N,N)	A or $A^{\#}$		Input: Matrix to be inverted A Output: Pseudo-inverse matrix $A^{\#}$
I/Ø	N				Input: Dimension of A Output: Rank of A
I	M				Number of rows of matrix of which A constitutes the upper left corner.
I	EPS	d	ϵ		Significance test value for determining rank of A.

Common storages used: //254 cells

Subroutines required: DINVRT,DMPLY

References:

1. Ben-Israel, Charness: "Contributions to Theory of Generalized Inverses," JOUR. SOC. INDUST. APPL. MATH., September, 1963.
2. Philco-Ford: SECOND QUARTERLY REPORT FOR COMPUTER PROGRAMS, WDL-TR3052, 31 August 1966, Appendix B.

Discussion:

In dealing with systems of linear equations one repeatedly encounters the following problem: Given the equation

$$y = Ax$$

where the vector y and the matrix A are known, solve for the vector x.

This problem admits of three distinct possibilities:

1. The system is overdetermined in the sense that no x exists that will exactly satisfy the equation. In this case, a common practice is to accept the least-squares estimate of x given by

$$\hat{x} = (A^T A)^{-1} A^T y.$$

In subroutine PSEUDØ we are not concerned with this case.

2. The system is exactly determined in the sense that a unique solution exists and is given by

$$x = A^{-1} y.$$

3. The system is underdetermined in the sense that A is singular and an infinite set of solutions exists.

Subroutine PSEUDØ is concerned with the latter two cases with the restriction that A is symmetric (and real). When A^{-1} exists, x is unique and no decision need be made as to which solution to choose. (A is inverted by subroutine DINVRT, which uses a Gauss-Jordan reduction). When A is singular, PSEUDØ computes the PSEUDØ inverse $A^{\#}$, which, using the equation

$$\hat{x} = A^{\#}y,$$

yields the estimate vector $\hat{x}$ described by the second of the following theorems, which we state without proof.

<u>Theorem 1</u>:

For any real symmetric matrix A there exists a unique matrix $A^{\#}$ that satisfies the following:

a. $AA^{\#}A = A$

b. $A^{\#}AA^{\#} = A^{\#}$

c. $(AA^{\#})^T = AA^{\#}$

d. $(A^{\#}A)^T = A^{\#}A$

Corollary: $A^{\#} = A^{-1}$ if A^{-1} exists.

<u>Theorem 2</u>:

If $\hat{x} = A^{\#}y$, then for any x

$$|y - A\hat{x}| \leq |y - Ax|$$

and if

$$|y - A\hat{x}| = |y - Ax|$$

then

$$|\hat{x}| \leq |x|$$

Method:

Since considerable interchanging of the column vectors of a matrix occurs during the computations, some amount of confusion arising from this fact may be avoided by stating the following:

Let U be any square matrix. The product UU^T is necessarily symmetric. Moreover, let V be a matrix obtained fom U by any number of column interchanges. Then, of course, VV^T is symmetric, and also $UU^T = VV^T$. Some definitions may also be useful at this point. If a symmetric matrix A be considered as a linear transformation from one vector space to another, the entire space on which A operates is called the domain space of A. The space into which A transforms the domain space is called the range space of A. The dimension of the range space is less than or equal to the dimension of the domain space. For example, if the domain is a Euclidean three space, and A transforms every vector in the domain into a plane, then the range space has dimension 2, in which case the inverse transform A^{-1} does not exist, since many vectors in the domain may transform into the same vector in the range. (PSEUDØ was developed to deal with just this situation.) The rank of A, denoted $\rho(A)$, is defined as the dimension of the range space of A, denoted R(A). If we denote the domain of A as D(A), then the set of all vectors d such that $d \in D(A)$ and such that $Ad = 0$ is called the null space of A, denoted N(A). The set of all vectors perpendicular to N(A), denoted $N^{\perp}(A)$, is called the perpendicular null space of A. Note that the trivial vector 0 belongs to both N(A) and $N^{\perp}(A)$. With such trivial exceptions, the dimension of R(A) is equal to the dimension of $N^{\perp}(A)$. Moreover, the dimension of the domain of A is equal to the dimension of R(A) plus the dimension of N(A).

The point of all the previous discussion is that PSEUDØ begins by attempting to construct an orthonormal set of basis vectors for $N^{\perp}(A)$. If n such vectors can be found, where n is the dimension of A, then A^{-1} exists and is found directly by subroutine DINVRT. The number of such basis vectors that can be formed is, of course, equal to the number of linearly independent (column) vectors of A; i.e., the rank of A.

Construction of the set of orthonormal basis vectors proceeds as follows (ignoring for the moment certain refinements added for maximum numerical accuracy):

First we construct a second matrix B having the same dimension as A and whose columns are the corresponding columns of A after having been normalized. That is, $b_i = a_i / |a_i|$, where the subscript denotes the i-th column.

We are now ready to start construction of a third matrix U whose columns will be the desired orthonormal basis vectors. The first vector u_1 we set equal to b_1. (Assume that a_1 has norm greater than the significance criterion ϵ.) We next compute u_2 by subtracting from b_2 the projection of b_2 onto u_1. That is, $u_2 = (I - u_1 u_1^T) b_2$. We now test the norm of u_2. If the norm is significant ($|u_2| > \epsilon$) we accept u_2 as being independent of u_1 and accept it as a second basis vector after normalizing it. Otherwise, we assume that b_2 is a linear multiple of b_1 and set all the elements of u_2 to zero. We continue this general scheme, computing the k-th basis vector as

$$u_k = (I - u_{k-1} u_{k-1}^T)(I - u_{k-2} u_{k-2}^T) \ldots (I - u_1 u_1^T) b_k ,$$

normalizing and accepting u_k if the norm is significant, or setting $u_k = 0$ if it is not, until all n vectors of B have been used. We next note the number r of non-zero basis vectors in U. If $r = n$, A is invertable and we set $A^{\#} = A^{-1}$.

If $r < n$, we note which columns of U contain zero vectors and delete from A the corresponding rows and columns, leaving an r-dimensional matrix C which is invertable. We compute C^{-1} with subroutine DINVRT and distribute the result into an $n \times n$ matrix C^* as follows: We fill the rows of C^* corresponding to the deleted rows and columns of A with zeros. We then place the elements of C^{-1} into the remaining spaces of C^* in such a way that the natural row and column order of C^{-1} is preserved. Then

$$A^{\#} = UU^T C^* UU^T .$$

Note that if $r = n$ and if we were to proceed in this way, $UU^T = I$ and $C^* = A^{-1}$ so that $A^{\#} = IA^{-1}\ I = A^{-1}$ as expected.

We now present a tutorial example. Let

$$A = \begin{pmatrix} 1 & 1 & 0 \\ 1 & 0 & 1 \\ 0 & 1 & -1 \end{pmatrix} \quad , \quad \epsilon = n \cdot 10^{-4} = 3 \cdot 10^{-4}$$

Then

$$B = \begin{pmatrix} \frac{1}{\sqrt{2}} & \frac{1}{\sqrt{2}} & 0 \\ \frac{1}{\sqrt{2}} & 0 & \frac{1}{\sqrt{2}} \\ 0 & \frac{1}{\sqrt{2}} & -\frac{1}{\sqrt{2}} \end{pmatrix}$$

Therefore

$$U = \begin{pmatrix} \frac{1}{\sqrt{2}} & x & x \\ \frac{1}{\sqrt{2}} & x & x \\ 0 & x & x \end{pmatrix}$$

where x denotes an as yet undetermined element. We next compute u_2 as

$$u_2 = (I - u_1 u_1^T) b_2 = \left(\frac{1}{2\sqrt{2}} , \ -\frac{1}{2\sqrt{2}} \quad \frac{1}{\sqrt{2}} \right)^T$$

and note that the norm is significant so we normalize u_2 and accept it so that

$$U = \begin{pmatrix} \frac{1}{\sqrt{2}} & \frac{1}{\sqrt{6}} & x \\ \frac{1}{\sqrt{2}} & -\frac{1}{\sqrt{6}} & x \\ 0 & \frac{2}{\sqrt{6}} & x \end{pmatrix}$$

We now compute u_3 as

$$u_3 = (I - u_2u_2T)(I - u_1u_1^T)b_3 = \begin{pmatrix} 0 \\ 0 \\ 0 \end{pmatrix}$$

which is not significant, so that

$$U = \begin{pmatrix} \frac{1}{\sqrt{2}} & \frac{1}{\sqrt{6}} & 0 \\ \frac{1}{\sqrt{2}} & -\frac{1}{\sqrt{6}} & 0 \\ 0 & \frac{2}{\sqrt{6}} & 0 \end{pmatrix}$$

We know that $n = 3$, $r = 2$, so we note that it was column 3 of B that was not linearly independent of columns 1 and 2. Accordingly we form C by deleting the third row and column from A to leave

$$C = \begin{pmatrix} 1 & 1 \\ 1 & 0 \end{pmatrix}$$

By direct computation

$$C^{-1} = \begin{pmatrix} 0 & 1 \\ 1 & -1 \end{pmatrix}$$

We now construct

$$C^* = \left(\begin{array}{cc|c} 0 & 1 & 0 \\ 1 & -1 & 0 \\ \hline 0 & 0 & 0 \end{array}\right)$$

By direct computation

$$UU^T = \begin{pmatrix} 2 & 1 & 1 \\ 1 & 2 & -1 \\ 1 & -1 & 2 \end{pmatrix}$$

whence

$$A^{\#} = UU^T C^* UU^T = \frac{1}{3}\begin{pmatrix} 1 & 1 & 0 \\ 1 & 0 & 1 \\ 0 & 1 & -1 \end{pmatrix}$$

As a check, we compute

$$AA^{\#} = \frac{1}{3}\begin{pmatrix} 2 & 1 & 1 \\ 1 & 2 & -1 \\ 1 & -1 & 2 \end{pmatrix}$$

We note in passing that $AA^{\#} = UU^T$. This will always be true.

By computation

$$AA^{\#}A = \begin{pmatrix} 1 & 1 & 0 \\ 1 & 0 & 1 \\ 0 & 1 & -1 \end{pmatrix} = A \text{ , and}$$

$$A^{\#}AA^{\#} = \frac{1}{3}\begin{pmatrix} 1 & 1 & 0 \\ 1 & 0 & 1 \\ 0 & 1 & -1 \end{pmatrix} = A^{\#}\text{, as promised.}$$

We now introduce some numerical devices used to obtain the greatest numerical accuracy. We explain by example.

Again, let

$$A = \begin{pmatrix} 1 & 1 & 0 \\ 1 & 0 & 1 \\ 0 & 1 & -1 \end{pmatrix}$$

so that

$$B = \begin{pmatrix} \frac{1}{\sqrt{2}} & \frac{1}{\sqrt{2}} & 0 \\ \frac{1}{\sqrt{2}} & 0 & \frac{1}{\sqrt{2}} \\ 0 & \frac{1}{\sqrt{2}} & -\frac{1}{\sqrt{2}} \end{pmatrix}$$

Instead of merely taking $u_1 = b_1$, let us take as u_1 the column of B corresponding to the column of A having the largest norm. Since, in this example, the three norms are identical, let us pretend that a_1 has the largest norm so that $u_1 = b_1$

$$U = \begin{pmatrix} \frac{1}{\sqrt{2}} & x & x \\ \frac{1}{\sqrt{2}} & x & x \\ 0 & x & x \end{pmatrix}$$

Let us now alter B by subtracting from the unused vectors b_2 and b_3 their projections onto u_1 so

$$B = \begin{pmatrix} \frac{1}{\sqrt{2}} & \frac{1}{2\sqrt{2}} & -\frac{1}{2\sqrt{2}} \\ \frac{1}{\sqrt{2}} & -\frac{1}{2\sqrt{2}} & \frac{1}{2\sqrt{2}} \\ 0 & \frac{1}{\sqrt{2}} & -\frac{1}{\sqrt{2}} \end{pmatrix}$$

As u_2 we now select from b_2 and b_3 the one whose projection into u_1 was smallest; i.e., the one that was originally most perpendicular to those vectors of U already computed. Again we must pretend, because of equality, so let us pretend that b_3 is the choice so that, after normalizing b_2 and b_3

$$U = \begin{pmatrix} \frac{1}{\sqrt{2}} & -\frac{1}{\sqrt{6}} & x \\ \frac{1}{\sqrt{2}} & \frac{1}{\sqrt{6}} & x \\ 0 & -\frac{2}{\sqrt{6}} & x \end{pmatrix} \qquad \text{and}$$

$$B = \begin{pmatrix} \frac{1}{\sqrt{2}} & \frac{1}{\sqrt{6}} & -\frac{1}{\sqrt{6}} \\ \frac{1}{\sqrt{2}} & \frac{1}{\sqrt{6}} & \frac{1}{\sqrt{6}} \\ 0 & \frac{2}{\sqrt{6}} & -\frac{2}{\sqrt{6}} \end{pmatrix}$$

For the u_3 we are forced to use b_2 and, having already subtracted its projection into u_1 we need merely compute

$$u_3 = (I - u_2 u_2^T) b_2 = \begin{pmatrix} 0 \\ 0 \\ 0 \end{pmatrix} \qquad \text{which is not significant so}$$

$$U = \begin{pmatrix} \frac{1}{\sqrt{2}} & -\frac{1}{\sqrt{6}} & 0 \\ \frac{1}{\sqrt{2}} & \frac{1}{\sqrt{6}} & 0 \\ 0 & -\frac{2}{\sqrt{6}} & 0 \end{pmatrix}$$

and we note that it was column 2 of B that was not significant. We always put the r vectors we can compute into the first r columns of U so that in forming UU^T we need only multiply an $n \times r$ matrix by an $r \times n$ matrix. (Remember that the column arrangement has no effect on the product.)

Once again

$$UU^T = \frac{1}{3}\begin{pmatrix} 2 & 1 & 1 \\ 1 & 2 & -1 \\ 1 & -1 & 2 \end{pmatrix}$$

However,

$$C = \begin{pmatrix} 1 & 0 \\ 0 & -1 \end{pmatrix} \quad \text{so that}$$

$$C^{-1} = \begin{pmatrix} 1 & 0 \\ 0 & -1 \end{pmatrix}, \quad \text{and}$$

$$C^* = \begin{pmatrix} 1 & 0 & 0 \\ 0 & 0 & 0 \\ 0 & 0 & -1 \end{pmatrix}$$

(Remember, the second row and column of A were deleted to form C).

and once again

$$A^\# = UU^T C^* UU^T = \frac{1}{3}\begin{pmatrix} 1 & 1 & 0 \\ 1 & 0 & 1 \\ 0 & 1 & -1 \end{pmatrix} \quad \text{as before.}$$

```
$IBFTC MC13Z5  XR3,M94,LIST,NODD
      SUBROUTINE PSEUDO(ATA,N,M,EPS)                                    PSD00001
      DOUBLE PRECISION DSQRT                                            PSD00002
      DOUBLE PRECISION ATA(1),EPS,EP                                    PSD00003
      DIMENSION B(6,6),BB(6),C(6,6),D(6,6),NI(6),MI(6),TP(6)            PSD00004
      DOUBLE PRECISION B,BB,C,D,TP,TPP,EPN                              PSD00005
      EQUIVALENCE (B(1,6),BB),(TP(2),TPP)                               PSD00006
      COMMON SAVE(14),TP,D,B,C,NI,MI                                    PSD00007
      DATA EPN/0.D0/                                                    PSD00008
C     SET UP INDICES                                                    PSD00009
      NN = N                                                            PSD00010
      ND = NN                                                           PSD00011
      EP = FLOAT(NN)*EPS*EPS                                            PSD00012
      DO 10 I=1,NN                                                      PSD00013
   10 NI(I) = I                                                         PSD00014
C     SET UP ARRAYS                                                     PSD00015
      JN = 1                                                            PSD00016
      DO 14 J=1,NN                                                      PSD00017
      K = JN                                                            PSD00018
      DO 12 I=1,NN                                                      PSD00019
      D(I,J) = ATA(K)                                                   PSD00020
      C(I,J) = D(I,J)                                                   PSD00021
   12 K = K+1                                                           PSD00022
   14 JN = JN+M                                                         PSD00023
      DO 28 J=1,NN                                                      PSD00024
      TP = 0.D0                                                         PSD00025
      DO 22 I=1,NN                                                      PSD00026
   22 TP = TP+C(I,J)**2                                                 PSD00027
      IF( TP.GT.EPN ) GO TO 24                                          PSD00028
      NI(J) = NI(ND)                                                    PSD00029
      NI(ND) = J                                                        PSD00030
      ND = ND-1                                                         PSD00031
      GO TO 28                                                          PSD00032
   24 BB(J) = DSQRT(TP)                                                 PSD00033
      DO 26 I=1,NN                                                      PSD00034
   26 C(I,J) = C(I,J)/BB(J)                                             PSD00035
   28 CONTINUE                                                          PSD00036
C     SELECT FIRST BASE VECTOR                                          PSD00037
      TP = 0.D0                                                         PSD00038
      DO 30 J=1,ND                                                      PSD00039
      JN = NI(J)                                                        PSD00040
      IF( BB(JN).LT.TP ) GO TO 30                                       PSD00041
      TP = BB(JN)                                                       PSD00042
      NKN = JN                                                          PSD00043
      K = J                                                             PSD00044
   30 BB(JN) = 0.D0                                                     PSD00045
      NK = 1                                                            PSD00046
   40 CONTINUF                                                          PSD00047
      NI(K) = NI(NK)                                                    PSD00048
      NI(NK) = NKN                                                      PSD00049
   41 CONTINUE                                                          PSD00050
C     COMPUTE BASE VECTOR                                               PSD00051
      DO 42 I=1,NN                                                      PSD00052
   42 B(I,NK) = C(I,NKN)                                                PSD00053
      IF( NK.LE.1 ) GO TO 62                                            PSD00054
      DO 44 J=2,NK                                                      PSD00055
      JN = NI(J-1)                                                      PSD00056
      DO 44 I=1,NN                                                      PSD00057
   44 B(I,NK) = B(I,NK)-B(I,J-1)*C(NKN,JN)                              PSD00058
      TP = 0.D0                                                         PSD00059
      DO 46 I=1,NN                                                      PSD00060
   46 TP = TP+B(I,NK)**2                                                PSD00061
C     TEST FOR SIGNIFICANCE                                             PSD00062
      IF( TP.GE.EP ) GO TO 48                                           PSD00063
      K = NI(ND)                                                        PSD00064
      NI(ND) = NKN                                                      PSD00065
      NI(NK) = K                                                        PSD00066
      NKN = K                                                           PSD00067
      ND = ND-1                                                         PSD00068
      IF( ND.LT.NK ) GO TO 200                                          PSD00069
      GO TO 41                                                          PSD00070
   48 TP = DSQRT(TP)                                                    PSD00071
C     NORMALIZE                                                         PSD00072
      DO 60 I=1,NN                                                      PSD00073
   60 B(I,NK) = B(I,NK)/TP                                              PSD00074
```

```
   62 NK = NK+1                                                         PSD00075
      IF( NK.GT.ND ) GO TO 200                                          PSD00076
C     COMPUTE PROJECTION OF REMAINING COLUMNS ONTO NEW BASE VECTOR      PSD00077
      TPP = 2.D0                                                        PSD00078
      DO 66 J=NK,ND                                                     PSD00079
      JN = NI(J)                                                        PSD00080
      TP = 0.D0                                                         PSD00081
      DO 64 I=1,NN                                                      PSD00082
   64 TP = TP+B(I,NK-1)*C(I,JN)                                         PSD00083
      C(JN,NKN) = TP                                                    PSD00084
      TP = BB(JN)+TP**2                                                 PSD00085
C     SELECT NEXT BASE VECTOR                                           PSD00086
      IF( TPP.LT.TP ) GO TO 66                                          PSD00087
      K = J                                                             PSD00088
      TPP = TP                                                          PSD00089
   66 BB(JN) = TP                                                       PSD00090
      NKN = NI(K)                                                       PSD00091
      GO TO 40                                                          PSD00092
C     ORTHONORMAL BASIS FOR PERPENDICULAR NULL SPACE COMPLETED          PSD00093
  200 CONTINUE                                                          PSD00094
      IF( ND.LT.NN ) GO TO 202                                          PSD00095
      CALL DINVRT(ATA,NN,M)                                             PSD00096
      GO TO 999                                                         PSD00097
  202 CONTINUE                                                          PSD00098
      DO 204 I=1,NN                                                     PSD00099
  204 MI(I) = 1                                                         PSD00100
      K = NN-1                                                          PSD00101
      DO 206 I=ND,K                                                     PSD00102
      IN = NI(I+1)                                                      PSD00103
  206 MI(IN) = 0                                                        PSD00104
      JN = 1                                                            PSD00105
      DO 222 J=1,NN                                                     PSD00106
      IF( MI(J).EQ.0 ) GO TO 222                                        PSD00107
      IN = 1                                                            PSD00108
      DO 220 I=1,NN                                                     PSD00109
      IF( MI(I).EQ.0 ) GO TO 220                                        PSD00110
      C(IN,JN) = D(I,J)                                                 PSD00111
      IN = IN+1                                                         PSD00112
  220 CONTINUE                                                          PSD00113
      JN = JN+1                                                         PSD00114
  222 CONTINUE                                                          PSD00115
      CALL DINVRT(C,ND,6)                                               PSD00116
      CALL DMPLY(B,B,D,NN,ND,NN,6,6,6,2)                                PSD00117
      DO 229 I=1,NN                                                     PSD00118
      JN=1                                                              PSD00119
      DO 228 J=1,NN                                                     PSD00120
      TP=0.D0                                                           PSD00121
      IF(MI(J).EQ.0) GO TO 228                                          PSD00122
      NK=1                                                              PSD00123
      DO 226 K=1,NN                                                     PSD00124
      IF(MI(K).EQ.0) GO TO 226                                          PSD00125
      TP=TP+C(JN,NK)*D(K,I)                                             PSD00126
      NK=NK+1                                                           PSD00127
  226 CONTINUE                                                          PSD00128
      JN=JN+1                                                           PSD00129
  228 B(J,I)=TP                                                         PSD00130
  229 CONTINUE                                                          PSD00131
      CALL DMPLY(D,B,ATA,NN,NN,NN,6,6,M,0)                              PSD00132
  999 N = ND                                                            PSD00133
      RETURN                                                            PSD00134
      END
```

Subroutine: QUARTC

Purpose: To find the solutions of the quadratic equation

$$a_2X^2 + a_1X + c = d$$

Calling Sequence: CALL QUARTC(C,D,A,ANS,K)

Input and Output

I/Ø	Symbolic Name or Location	Program Dimensions	Math Symbol	Data Dimensions or Units	Definition
I	C		c		
I	D		d		
I	A	(2)	a_1, a_2		
Ø	ANS	(2)			Solutions ANS(1) = $(-a_1-F)/2a_2$ ANS(2) = $(-a_1+F)/2a_2$ where F is the square root of the discriminant $G = a_1^2 - 2a_2(c-d)$
Ø	K				K = - 1 if G < 0 (no solution) K = 0 if G ≥ 0

Common storages used: None

Subroutines required: None

```
$IBFTC MC13QC  NOREF,M94,NODD,XR3
CMC13QC     QUARTC                                                  QUAC0010
      SUBROUTINE  QUARTC(O,OD,A,DT,K)                               QUAC0020
      DIMENSION DT(2) , A(2)                                        QUAC0030
      K= 0                                                          QUAC0040
      B = A(1)*A(1) - 4.*A(2)*(O-OD)                                QUAC0050
      IF(B) 1,1,2                                                   QUAC0060
1     K= -1                                                         QUAC0070
      GO TO  3                                                      QUAC0080
2     CONTINUE                                                      QUAC0090
      B=  SQRT(B)                                                   QUAC0100
      C= 2. * A (2)                                                 QUAC0110
      DT(1)= (-A(1) - B) / C                                        QUAC0120
      DT(2) = (-A(1) + B)/  C                                       QUAC0130
3     CONTINUE                                                      QUAC0140
      RETURN                                                        QUAC0150
      END                                                           QUAC0160
```

Subroutine: RESØUT

Purpose: Controls output of the residuals of the data from a single station from a specified estimate of state.

Calling Sequence: CALL RESØUT (LTRAJ)

Input and Output

I/Ø	Symbolic Name or Location	Program Dimensions	Math Symbol	Data Dimensions or Units	Definition
IØ	LTRAJ	ℓ			.TRUE. except on initial entry and final return.

Common storages used: //146 cells,/DATCØM/,/DCPCØM/,/EDTCØM/,/ESRCØM/, /PØTCØM/,/RSCØM/,/RSLCØM/,/SB3CØM/

Subroutines required: CBDAT, DEHA, DEQTR, DGTRN, DGTSN, DMPLY, DMVTRN, DATØUP, DSDAT, GRDAT, RSPLØT, SBDAT

Method

The subroutine initialization, state interpolation, and residual computation parallels that of ESTMAT (q.v.).

The plotting of residuals is accomplished as each time point set of residuals is computed. The residuals and interpolated state are stored in the buffer BUFRSL. When the buffer is filled, the record pair INDRSL, BUFRSL is written on the residual tape if a tape is desired, or if the residuals are being plotted. The residuals and state are listed at this point if the residuals are not being plotted, and if the list has been requested on the process control card.

On completion of the residual plotting, if any, the residual tape is read and the residuals and state are listed. If no residual tape is desired and the residuals have been written for temporary storage, the tape is again repositioned at the start of the process, and an end-of-tape record is written over the first INDRSL record.

```
$IBFTC MC133K  XR3,M94,NOCD,LIST
      SUBROUTINE RESOUT (NRSPOS,LTRAJ)                                  ROUT0001
C     CONTROL ROUTINE FOR RESIDUAL OUTPUT                               ROUT0002
C                                                                       ROUT0003
      LOGICAL             LTRAJ                                         ROUT0004
      DOUBLE PRECISION    DCOS ,DSIN ,DSQRT                             ROUT0005
C                                                                       ROUT0006
      COMMON             /DCPCOM/CDCP(900)                              ROUT0007
      DIMENSION           IFSKIP(4) ,IPROC(5) ,MSKIP(4,4) ,NPROC(22)    ROUT0008
      DOUBLE PRECISION    CON(8) ,SN(13,20) ,STIMR(2)                   ROUT0009
      EQUIVALENCE                (CDCP(881),MSKIP ) ,(CDCP(143),SN    )  ROUT0010
     1    ,(CDCP(  1),CON   ) ,(CDCP(116),NRSEND) ,(CDCP(781),STIMR )   ROUT0011
     2    ,(CDCP(756),IPROC ) ,(CDCP(731),NPROC ) ,(CDCP(110),YTEST )   ROUT0012
      EQUIVALENCE        (IPROC( 5),IFTSTP) ,(IPROC( 2),ITRSTA)         ROUT0013
     1                  ,(IPROC( 3),INDSTA)                             ROUT0014
      EQUIVALENCE                (NPROC(19),IFOUTL) ,(NPROC(13),NPSKIP) ROUT0015
     1                          ,(NPROC(14),IFSKIP) ,(NPROC(22),NRLIST) ROUT0016
     2                          ,(NPROC(10),NPREST) ,(NPROC(21),NRPLOT) ROUT0017
     3    ,(NPROC(18),IFBADD) ,(NPROC( 3),NPRSTA) ,(NPROC(20),NRTAPE)   ROUT0018
C                                                                       ROUT0019
      COMMON             /ECTCOM/INDDAT(40),BUFDAT(85,6)                ROUT0020
      DOUBLE PRECISION    DATIND(20),ONTIME                             ROUT0021
      EQUIVALENCE                (INDDAT( 7),KONT  ) ,(INDDAT( 6),NPTS  ) ROUT0022
     1                          ,(INDDAT(12),KTAU  ) ,(INDDAT( 3),NRSTA ) ROUT0023
     2   ,(INDDAT( 1),DATIND) ,(INDDAT( 8),MTYPE ) ,(INDDAT( 4),NTSTA ) ROUT0024
     3   ,(INDDAT(11),DELT  ) ,(INDDAT( 2),NEOT  ) ,(INDDAT(13),ONTIME) ROUT0025
C                                                                       ROUT0026
      COMMON             /ESRCOM/CESR(304)                              ROUT0027
      DOUBLE PRECISION    CRF   (2) ,ETIMVA ,SER(14,2)                  ROUT0028
     1                  ,DELDAR(2)          ,SPCDAR(6)                  ROUT0029
      EQUIVALENCE                (CESR( 29),ETIMVA) ,(CESR(245),SER   )  ROUT0030
     1    ,(CESR(301),CRF   ) ,(CESR(  2),NBY   ) ,(CESR( 49),SPCDAR)   ROUT0031
     2    ,(CESR( 97),DELDAR) ,(CESR(  1),NESPOS)                       ROUT0032
C                                                                       ROUT0033
      COMMON             /SB3COM/CSBF(12),RBF(6),VBF(6,8)               ROUT0034
      DOUBLE PRECISION    RBF ,VBF ,HBF ,TBF ,TFF                       ROUT0035
      EQUIVALENCE        (CSBF( 7),HBF   ) ,(CSBF( 2),NTP   )           ROUT0036
     1                  ,(CSBF( 5),LCB   ) ,(CSBF( 9),TBF   )           ROUT0037
     2                  ,(CSBF( 3),NPT1  ) ,(CSBF(11),TFF   )           ROUT0038
C                                                                       ROUT0039
      COMMON             /RSLCOM/INDRSL(16),BUFRSL(18,14)               ROUT0040
      DIMENSION           IRSL(14)                                      ROUT0041
      DOUBLE PRECISION    DBUFRL(9,14) ,TRFRST ,TRON                    ROUT0042
     1                  ,DINDRL   (8) ,TRLAST ,TROFF                    ROUT0043
      EQUIVALENCE                (INDRSL( 2),NREOT ) ,(INDRSL( 6),NRSSTA) ROUT0044
     1   ,(INDRSL( 1),DINDRL) ,(INDRSL( 7),NREST ) ,(INDRSL(13),TRFRST) ROUT0045
     2   ,(INDRSL( 3),IRSL  ) ,(INDRSL( 3),NRKONT) ,(INDRSL(15),TRLAST) ROUT0046
     3   ,(INDRSL( 8),MRTYPE) ,(INDRSL( 1),NRPOS ) ,(INDRSL(11),TROFF ) ROUT0047
     4   ,(INDRSL( 4),NRBLK ) ,(INDRSL( 5),NRPTS ) ,(INDRSL( 9),TRON  ) ROUT0048
      EQUIVALENCE        (BUFRSL(1,1),DBUFRL)                           ROUT0049
C                                                                       ROUT0050
      COMMON             /RSCOM/KPTIM(8),RLSAVE(56)                     ROUT0051
      LOGICAL             KOUTL ,LSKIP(4) ,KPMAX ,KPTIME                ROUT0052
      DIMENSION           NASGN(18) ,PMAX(5) ,SUM  (4)                  ROUT0053
     1                  ,NSUM  (4)          ,SUMSQ(4)                   ROUT0054
      DOUBLE PRECISION    OBIAS(4) ,TFIRST ,YMOD(4)                     ROUT0055
      EQUIVALENCE        (KPTIM( 1),KPTIME) ,(KPTIM( 2),PTIME )         ROUT0056
     1                  ,(KPTIM( 3),KPMAX ) ,(KPTIM( 4),PMAX  )         ROUT0057
      EQUIVALENCE                (RLSAVE(23),LSKIP ) ,(RLSAVE(31),SUM   ) ROUT0058
     1                          ,(RLSAVE(39),NASGN ) ,(RLSAVE(35),SUMSQ ) ROUT0059
     2                          ,(RLSAVE(27),NSUM  ) ,(RLSAVE(17),TFIRST) ROUT0060
     3                          ,(RLSAVE( 1),OBIAS ) ,(RLSAVE(20),TREF  ) ROUT0061
     4   ,(RLSAVE(22),KOUTL ) ,(RLSAVE(19),STPTIM) ,(RLSAVE( 9),YMOD  ) ROUT0062
      EQUIVALENCE                (NASGN( 5),N203  ) ,(NASGN(12),N406  )  ROUT0063
     1                          ,(NASGN( 6),N204  ) ,(NASGN(13),N410  )  ROUT0064
     2                          ,(NASGN( 7),N290  ) ,(NASGN(14),N425  )  ROUT0065
     3    ,(NASGN( 1),N122  ) ,(NASGN( 8),N300  ) ,(NASGN(15),N435  )   ROUT0066
     4    ,(NASGN( 2),N129  ) ,(NASGN( 9),N302  ) ,(NASGN(16),N440  )   ROUT0067
     5    ,(NASGN( 3),N130  ) ,(NASGN(10),N319  ) ,(NASGN(17),N442  )   ROUT0068
     6    ,(NASGN( 4),N200  ) ,(NASGN(11),N404  ) ,(NASGN(18),N825  )   ROUT0069
C                                                                       ROUT0070
      COMMON             /POTCOM/PLOTC(42)                              ROUT0071
      LOGICAL             KDATA(4)                                      ROUT0072
      DIMENSION           DATA  (4) ,SYMBOL(4)                          ROUT0073
     1                  ,DATMAX(4) ,LABEL(12)                           ROUT0074
```

```
      EQUIVALENCE                (PLOTC(11),DATMAX) ,(PLOTC(15),LABEL )   ROUT0075
     1                          ,(PLOTC(10),DT    ) ,(PLOTC(27),SYMBOL)   ROUT0076
     2    ,(PLOTC( 2),DATA  ) ,(PLOTC( 6),KDATA ) ,(PLOTC( 1),TIME  )   ROUT0077
C                                                                         ROUT0078
      COMMON              /DATCOM/CDAT(299)                               ROUT0079
      DIMENSION            IDATA(7)                                       ROUT0080
      DOUBLE PRECISION     BIAS  (2) ,OMEGA    ,TAU        ,TT2BT(9)      ROUT0081
     1                    ,FTR        ,SPDLT    ,TB2C(9,4) ,XV  (12)      ROUT0082
     2                    ,OBS(16,4) ,STA(10) ,TT2BO (9)                 ROUT0083
      EQUIVALENCE                (CDAT(293),IDATA ) ,(CDAT(159),TAU   )   ROUT0084
     1                          ,(CDAT(  5),OBS   ) ,(CDAT(161),TB2C  )   ROUT0085
     2                          ,(CDAT(135),OMEGA ) ,(CDAT(233),TT2BO )   ROUT0086
     3    ,(CDAT(  1),BIAS  ) ,(CDAT(137),SPDLT ) ,(CDAT(251),TT2BT )   ROUT0087
     4    ,(CDAT(133),FTR   ) ,(CDAT(139),STA   ) ,(CDAT(269),XV    )   ROUT0088
      EQUIVALENCE         (IDATA( 2),MODE  ) ,(IDATA( 5),NALIGN)          ROUT0089
     1                   ,(IDATA( 7),NFRAC )                              ROUT0090
C                                                                         ROUT0091
      COMMON               SAVE(60) ,D(33) ,STT(5,2)                      ROUT0092
      DOUBLE PRECISION     D ,STT                                         ROUT0093
C                                                                         ROUT0094
      LOGICAL              L ,LOUTL                                       ROUT0095
      DIMENSION            IDUAL(4) ,JDATA (7) ,LBTYP(4) ,NQUAL(4)        ROUT0096
     1                    ,IQL  (4) ,LBM(12,4) ,NM   (4) ,PRCD (5)        ROUT0097
     2                                                   ,SYM(4,4)        ROUT0098
      EQUIVALENCE         (QUAL,IQUAL)                                    ROUT0099
      DOUBLE PRECISION     ETIMR ,ETIMV  ,GHA                             ROUT0100
     1                    ,ETIMT ,FLT(8) ,UTIMR                          ROUT0101
C                                                                         ROUT0102
      DATA    FLT  /1.D0,2.D0,3.D0,4.D0,5.D0,6.D0,7.D0,8.D0/              ROUT0103
      DATA    NM  /-3,1,3,-1/                                             ROUT0104
      DATA    JDATA/ 2, 0, 2, 2, 0, 1, 0/                                 ROUT0105
      DATA    NQUAL/ 1000, 100,  10,   1/                                 ROUT0106
      DATA    LBM  /6HAZIMUT,6HELEVAT,6HRANGE ,6H      ,6HH     ,6HION   ROUT0107
     1             ,6H      ,6H      ,6HRAD   ,6HRAD   ,6HKM    ,6H     ROUT0108
     2             ,6HX     ,6HY     ,6HRANGE ,6HDOPPLE,6H      ,6H     ROUT0109
     3             ,6H      ,6HR     ,6HRAD   ,6HRAD   ,6HSEC   ,6HCYCLESROUT0110
     3             ,6HX     ,6HY     ,6HRANGE ,6HDOPPLE,6H      ,6H     ROUT0111
     2             ,6H      ,6HR     ,6HRAD   ,6HRAD   ,6HKM    ,6HCYCLESROUT0112
     4             ,6HHOUR A,6HDECLIN,6H      ,6HDOPPLE,6HNGLE  ,6HATION ROUT0113
     4             ,6H      ,6HR     ,6HRAD   ,6HRAD   ,6H      ,6HCYCLESROUT0114
     5             /                                                      ROUT0115
      DATA    LBTYP/6HC-BAND,6HG-RR  ,6HS-BAND,6HDSIF  /                  ROUT0116
      DATA    IDUAL/6HIDUALS,6H AND V,6HEHICLE,6H STATE/                  ROUT0117
      DATA    PRCD /6H, PROC,6HEED TO,6H THE N,6HEXT PR,6HOCESS /         ROUT0118
      DATA    START ,STOP  /6HOSTART,6H STOP /                            ROUT0119
      DATA    SYM  /1HA,1HE,1HR,1HZ ,1HX,1HY,1HR,1HD                      ROUT0120
     1             ,1HX,1HY,1HR,1HD ,1HH,1HC,1HR,1HD /                    ROUT0121
C                                                                         ROUT0122
  601 FORMAT(//23HORECEIVING STATION      ,A6/23H TRANSMITTING STATION  ,ROUT0123
     1A6/10H DATA TYPE,13X,A6,2H (,3(2A6,2H, ),2A6/32X,4(A6,8X),1H))     ROUT0124
  603 FORMAT(/41HOTIME TAGS ARE REFERRED TO FIRST ONTIME =,D24.16,23H SEROUT0125
     1CONDS (ST) FROM 1950)                                               ROUT0126
  604 FORMAT(A6,14H PROCESSING AT,F12.2,13H SECONDS (ST))                 ROUT0127
  605 FORMAT(35H STOP PROCESSING AT END OF DATA ARC)                      ROUT0128
  606 FORMAT(6HOSKIP ,I3,31H DATA PTS BETWEEN PROCESSED PTS)              ROUT0129
  607 FORMAT(27HOESTIMATE TAPE RECORD PAIR ,I3,14H DEFINES STATE)         ROUT0130
  608 FORMAT(33HO** NO RESIDUAL PROCESS SPECIFIED,5A6)                    ROUT0131
  609 FORMAT(73HO** WRITE RESIDUALS AND VEHICLE STATE ON TAPE, STARTING ROUT0132
     1WITH RECORD PAIR ,I3)                                               ROUT0133
  610 FORMAT(33HO** RESIDUALS NOT WRITTEN ON TAPE)                        ROUT0134
  611 FORMAT(18H1** PLOT RESIDUALS)                                       ROUT0135
  612 FORMAT(31HO** ALL MEASUREMENTS SUPPRESSED,5A6)                      ROUT0136
  641 FORMAT(22H1** LIST RESIDUAL TAPE)                                   ROUT0137
  642 FORMAT(23H     INDRSL RECORDS ONLY)                                 ROUT0138
  643 FORMAT(28H     VEHICLE STATE SUPPRESSED)                            ROUT0139
  644 FORMAT(//119HORECORD PAIR     END OF TAPE     CONTINUATION     BLOROUT0140
     1CK COUNT     POINTS     STATION     EST TAPE RECORD PAIR     MTYPEROUT0141
     2/9X,I3,14X,I2,16X,I1,13X,I3,9X,I2,6X,A6,15X,2I10//16X,15HPROCESS OROUT0142
     3N TIME,9X,16HPROCESS OFF TIME,8X,16HBLOCK FIRST TIME,8X,15HBLOCK LROUT0143
     4AST TIME/11X,4D24.16)                                               ROUT0144
  645 FORMAT(12H1** LIST RES,4A6)                                         ROUT0145
  646 FORMAT(/14HOQUALITY  TIME,8X,4(4X,2A6)/10X,5H(SEC),3X,4(8X,1H(,A6,ROUT0146
     11H))/1H )                                                           ROUT0147
  647 FORMAT(26X,61HVEHICLE STATE IN EARTH CENTERED EQUATOR OF 1950.0 COROUT0148
     1ORDINATES/14X,6(12X,2HX(,I1,1H))/1H )                               ROUT0149
```

```
  648 FORMAT(2X,I4,5E16.8)                                              ROUT0150
  649 FORMAT(22X,6E16.8/1H )                                            ROUT0151
  681 FORMAT(20H0** RESIDUAL SUMMARY,4X,4(4X,2A6)/20X,4(8X,1H(,A6,1H))) ROUT0152
  682 FORMAT(/6X,15HFIRST  MOMENT =,3X,4E16.8/6X,15HSECOND MOMENT =,3X,4ROUT0153
     1E16.8/6X,15HSAMPLE ST DEV =,3X,4E16.8/6X,15HPTS INCLUDED  =,3X,4I1ROUT0154
     26)                                                                ROUT0155
C                                                                       ROUT0156
C**** INITIALIZATION                                                    ROUT0157
C                                                                       ROUT0158
    1 IF (LTRAJ)              GO TO 90                                  ROUT0159
C                                                                       ROUT0160
C     HERE FOR INITIAL ENTRY FOR EACH PROCESS                           ROUT0161
C     POSITION TAPES                                                    ROUT0162
   10 CONTINUE                                                          ROUT0163
      NRPOS = NRSPOS                                                    ROUT0164
      NREST = NESPOS                                                    ROUT0165
      IF (NPREST.EQ.0)        GO TO 11                                  ROUT0166
      READ  (12) SKIP                                                   ROUT0167
      NPREST = 0                                                        ROUT0168
   11 N = NRSEND-NRPOS                                                  ROUT0169
      IF (N.EQ.0)             GO TO 13                                  ROUT0170
      DO 12 I=1,N                                                       ROUT0171
      READ  (11) NRPOS,NREOT                                            ROUT0172
      IF (NREOT.LE.0)         GO TO 12                                  ROUT0173
      BACKSPACE 11                                                      ROUT0174
      NRSEND = NRPOS                                                    ROUT0175
      GO TO 13                                                          ROUT0176
   12 READ  (11) SKIP                                                   ROUT0177
   13 CONTINUE                                                          ROUT0178
      DO 14 I=1,4                                                       ROUT0179
   14 INDRSL(I+1) = 0                                                   ROUT0180
      IF (NRSEND.EQ.0)        NREOT =-1                                 ROUT0181
      NRSSTA = NRSTA                                                    ROUT0182
C                                                                       ROUT0183
C     SET UP COUNTERS AND REFERENCES                                    ROUT0184
   20 CONTINUE                                                          ROUT0185
      III = NPSKIP                                                      ROUT0186
      NPSKIP = NPSKIP+1                                                 ROUT0187
      TFIRST = ONTIME                                                   ROUT0188
      STPTIM = STIMR(2)-ONTIME                                          ROUT0189
      DO 21 I=1,7                                                       ROUT0190
   21 IDATA(I) = JDATA(I)                                               ROUT0191
      ASSIGN 801 TO N122                                                ROUT0192
      ASSIGN  22 TO N129                                                ROUT0193
      GO TO 110                                                         ROUT0194
   22 ASSIGN 800 TO N122                                                ROUT0195
      ASSIGN 130 TO N129                                                ROUT0196
      ASSIGN  23 TO N130                                                ROUT0197
   23 CONTINUE                                                          ROUT0198
      STP = STIMR(1)-ONTIME                                             ROUT0199
      DO 24 NPT=1,NPTS                                                  ROUT0200
   24 IF (STP.LE.BUFDAT(NPT,2)) GO TO 25                                ROUT0201
      NPT = NPTS+1                                                      ROUT0202
      GO TO 100                                                         ROUT0203
   25 ASSIGN 200 TO N130                                                ROUT0204
      TRON  = CNTIME+BUFDAT(NPT,2)                                      ROUT0205
      TROFF = STIMR(2)                                                  ROUT0206
      NPT1  = NPT-NPSKIP                                                ROUT0207
      YMOD(1) = CON(3)                                                  ROUT0208
      YMOD(2) = CON(3)                                                  ROUT0209
      YMOD(4) = YTEST                                                   ROUT0210
      OBIAS(4) = 0.D0                                                   ROUT0211
      DO 26 I=1,4                                                       ROUT0212
      NSUM (I) = 0                                                      ROUT0213
      SUM  (I) = 0.                                                     ROUT0214
   26 SUMSQ(I) = 0.                                                     ROUT0215
C                                                                       ROUT0216
C     WRITE HEADING DATA                                                ROUT0217
   30 CONTINUE                                                          ROUT0218
      WRITE (6,601) NRSTA ,NTSTA ,LBTYP(MTYPE)                          ROUT0219
     1              ,(LABEL(I),LABEL(I+4),I=1,4) ,(LABEL(I),I=9,12)     ROUT0220
      WRITE (6,603) TFIRST                                              ROUT0221
      CALL DATOUP (TFIRST,D,0)                                          ROUT0222
      WRITE (6,604) START ,BUFDAT(NPT,2)                                ROUT0223
      GO TO (31,32) ,IFTSTP                                             ROUT0224
```

```
   31 WRITE (6,604) STOP ,STPTIM                                    ROUT0225
      ASSIGN 201 TO N200                                            ROUT0226
      GO TO 33                                                      ROUT0227
   32 WRITE (6,605)                                                 ROUT0228
      ASSIGN 202 TO N200                                            ROUT0229
   33 CONTINUE                                                      ROUT0230
      IF (III.NE.0)            WRITE (6,606) III                    ROUT0231
      IF (NREST.NE.0)          WRITE (6,607) NREST                  ROUT0232
C                                                                   ROUT0233
C     SET SWITCHES                                                  ROUT0234
   40 CONTINUE                                                      ROUT0235
      IF (IFOUTL.NE.0)         GO TO 41                             ROUT0236
      ASSIGN 203 TO N203                                            ROUT0237
      ASSIGN 319 TO N302                                            ROUT0238
      KOUTL = .TRUE.                                                ROUT0239
      GO TO 42                                                      ROUT0240
   41 ASSIGN 204 TO N203                                            ROUT0241
      ASSIGN 303 TO N302                                            ROUT0242
      KOUTL = .FALSE.                                               ROUT0243
   42 IF (IFBACD.NE.0)         GO TO 43                             ROUT0244
      ASSIGN 100 TO N204                                            ROUT0245
      ASSIGN 301 TO N300                                            ROUT0246
      GO TO 44                                                      ROUT0247
   43 ASSIGN 205 TO N204                                            ROUT0248
      ASSIGN 302 TO N300                                            ROUT0249
   44 CONTINUE                                                      ROUT0250
      ASSIGN 400 TO N319                                            ROUT0251
      ASSIGN 500 TO N404                                            ROUT0252
      ASSIGN 410 TO N406                                            ROUT0253
      ASSIGN 450 TO N410                                            ROUT0254
      ASSIGN 825 TO N425                                            ROUT0255
      ASSIGN 440 TO N435                                            ROUT0256
      ASSIGN 442 TO N440                                            ROUT0257
      ASSIGN 825 TO N442                                            ROUT0258
      ASSIGN 420 TO N825                                            ROUT0259
      IF (NRPLCT.NE.0)         GO TO 46                             ROUT0260
      ASSIGN 100 TO N404                                            ROUT0261
      ASSIGN 420 TO N410                                            ROUT0262
      ASSIGN 440 TO N425                                            ROUT0263
      ASSIGN 455 TO N442                                            ROUT0264
      IF (NRLIST.GT.3)         ASSIGN 450 TO N425                   ROUT0265
      IF (NRTAPE.NE.0)         GO TO 47                             ROUT0266
      ASSIGN 430 TO N406                                            ROUT0267
      IF (NRLIST.NE.0)         GO TO 45                             ROUT0268
      WRITE (6,608) PRCD                                            ROUT0269
      GO TO 801                                                     ROUT0270
   45 IF (NRLIST.GE.3)         GO TO 48                             ROUT0271
      ASSIGN 100 TO N319                                            ROUT0272
      GO TO 49                                                      ROUT0273
   46 IF (NRTAPE.NE.0)         GO TO 47                             ROUT0274
      IF (NRLIST.GE.3)         GO TO 48                             ROUT0275
      ASSIGN 500 TO N319                                            ROUT0276
      GO TO 49                                                      ROUT0277
   47 N = NRPOS+1                                                   ROUT0278
      WRITE (6,609) N                                               ROUT0279
      IF (NRLIST.LT.3)         GO TO 49                             ROUT0280
      ASSIGN 450 TO N442                                            ROUT0281
   48 IF (NRLIST.LT.4)         GO TO 49                             ROUT0282
      ASSIGN 436 TO N435                                            ROUT0283
      ASSIGN 441 TO N440                                            ROUT0284
   49 CONTINUE                                                      ROUT0285
      IF (NRTAPE.NE.0)         GO TO 50                             ROUT0286
      ASSIGN 430 TO N825                                            ROUT0287
      WRITE (6,610)                                                 ROUT0288
C                                                                   ROUT0289
C     LOAD FIXED DATA                                               ROUT0290
   50 CONTINUE                                                      ROUT0291
      DO 51 I=1,9                                                   ROUT0292
      TT2BC(I) = SN(I+4,INDSTA)                                     ROUT0293
   51 TT2BT(I) = SN(I+4,ITRSTA)                                     ROUT0294
      CALL DMVTRN (TT2BC,SER(6,1),STA   ,1,1)                       ROUT0295
      CALL DMVTRN (TT2BT,SER(6,2),STA(6),1,1)                       ROUT0296
      DO 52 I=1,3                                                   ROUT0297
      OBIAS(I) = SER(I+6,1)                                         ROUT0298
      STA(I)   = SN(I+1,INDSTA)+STA(I)                              ROUT0299
```

```
   52 STA(I+5) = SN(I+1,ITRSTA)+STA(I+5)                                ROUT0300
      SPDLT = CON(8)+SER(6,1)                                           ROUT0301
C                                                                       ROUT0302
C     INITIALIZE PLOT                                                   ROUT0303
   80 CONTINUE                                                          ROUT0304
      IF (NRPLOT.EQ.0)          GO TO 90                                ROUT0305
      DO 82 I=1,4                                                       ROUT0306
      IF (LSKIP(I))             GO TO 82                                ROUT0307
      DATMAX(I) = PMAX(I+1)                                             ROUT0308
      IF (.NOT.KPMAX)           DATMAX(I) = PMAX*SER(I+10,1)            ROUT0309
   82 CONTINUE                                                          ROUT0310
      DT = PTIME                                                        ROUT0311
      IF (KPTIME)               GO TO 84                                ROUT0312
      DT = AINT(DELT)                                                   ROUT0313
      IF (DT.GT.0.)             GO TO 84                                ROUT0314
      DT = 0.1                                                          ROUT0315
   84 WRITE (6,611)                                                     ROUT0316
      CALL RSPLOT(1)                                                    ROUT0317
C                                                                       ROUT0318
C     HERE FOR REPEATED ENTRIES                                         ROUT0319
   90 CONTINUE                                                          ROUT0320
      LTRAJ = .FALSE.                                                   ROUT0321
      NPT = NPT1                                                        ROUT0322
C                                                                       ROUT0323
C**** DATA INPUT CONTROL                                                ROUT0324
C                                                                       ROUT0325
  100 NPT = NPT+NPSKIP                                                  ROUT0326
      IF (NPT.LE.NPTS)          GO TO 200                               ROUT0327
      NPT = NPT-NPTS                                                    ROUT0328
C                                                                       ROUT0329
C     LOCATE NEXT DATA RECORD                                           ROUT0330
      ASSIGN 102 TO N101                                                ROUT0331
  101 READ  (10) INDDAT                                                 ROUT0332
      IF (NEOT.EQ.0)            GO TO N101, (102,103)                   ROUT0333
      GO TO 800                                                         ROUT0334
  102 IF (KCNT.NE.0)            GO TO 130                               ROUT0335
      ASSIGN 103 TO N101                                                ROUT0336
      NPT = 1                                                           ROUT0337
      GO TO (103,800) ,IFTSTP                                           ROUT0338
  103 IF (STIMR(2).LT.CNTIME) GO TO 800                                 ROUT0339
      IF (NPRSTA.EQ.NRSTA)      GO TO 110                               ROUT0340
      READ  (10) SKIP                                                   ROUT0341
      GO TO 101                                                         ROUT0342
C                                                                       ROUT0343
C     SET DATA TAPE DEPENDENT VARIABLES                                 ROUT0344
  110 CONTINUE                                                          ROUT0345
      MRTYPE  = MTYPE                                                   ROUT0346
      TREF    = ONTIME-TFIRST                                           ROUT0347
      NALIGN  = INDDAT( 9)                                              ROUT0348
      MODE    = INDDAT(10)                                              ROUT0349
      TAU     = DATIND(10)                                              ROUT0350
      FTR     = DATIND(11)                                              ROUT0351
      STA(4)  = DATIND(12)                                              ROUT0352
      STA(5)  = DATIND(13)                                              ROUT0353
      YMOD(3) = DATIND(14)                                              ROUT0354
      BIAS(1) = DATIND(15)+SER(10,1)/TAU                                ROUT0355
      BIAS(2) = DATIND(16)                                              ROUT0356
      GO TO (111,112,113,114) ,MTYPE                                    ROUT0357
  111 ASSIGN 291 TO N290                                                ROUT0358
      MODE = 0                                                          ROUT0359
      GO TO 120                                                         ROUT0360
  112 ASSIGN 292 TO N290                                                ROUT0361
      GO TO 120                                                         ROUT0362
  113 ASSIGN 293 TO N290                                                ROUT0363
      GO TO 120                                                         ROUT0364
  114 ASSIGN 294 TO N290                                                ROUT0365
C                                                                       ROUT0366
C     SET DATA TAPE DEPENDENT SWITCHES                                  ROUT0367
  120 CONTINUE                                                          ROUT0368
      L = .FALSE.                                                       ROUT0369
      DO 122 I=1,4                                                      ROUT0370
      LSKIP(I) = .TRUE.                                                 ROUT0371
      KDATA(I) = .FALSE.                                                ROUT0372
      DO 121 J=I,12,4                                                   ROUT0373
  121 LABEL(J)  = LBM(J,MTYPE)                                          ROUT0374
```

```
      SYMBCL(I) = SYM(I,MTYPE)                                          ROUT0375
      IF (MSKIP(I,MTYPE)+IFSKIP(I).GT.0) GO TO 122                      ROUT0376
      LSKIP(I) = .FALSE.                                                ROUT0377
      KDATA(I) = .TRUE.                                                 ROUT0378
      L = .TRUE.                                                        ROUT0379
  122 CONTINUE                                                          ROUT0380
      IF (L) GO TO 123                                                  ROUT0381
      WRITE (6,612) PRCD                                                ROUT0382
      GO TO N122, (800,801)                                             ROUT0383
  123 NFRAC  = 1                                                        ROUT0384
      IF (CRF(1)) 124,126,125                                           ROUT0385
  124 NFRAC  = 2                                                        ROUT0386
      GO TO 126                                                         ROUT0387
  125 STA(4) = CRF(1)                                                   ROUT0388
      STA(5) = CRF(2)                                                   ROUT0389
  126 CONTINUE                                                          ROUT0390
      STA( 9) = STA(4)                                                  ROUT0391
      STA(10) = STA(5)                                                  ROUT0392
  129 GO TO N129, ( 22,130)                                             ROUT0393
C                                                                       ROUT0394
C     READ NEXT DATA RECORD                                             ROUT0395
  130 READ  (10) BUFDAT                                                 ROUT0396
      GO TO N130, ( 23,200)                                             ROUT0397
C                                                                       ROUT0398
C**** COMPUTE OBSERVABLES                                               ROUT0399
C                                                                       ROUT0400
C     SET UP WORKING ARRAYS                                             ROUT0401
  200 CONTINUE                                                          ROUT0402
      TIME = BUFDAT(NPT,2)+TREF                                         ROUT0403
      GO TO N200, (201,202)                                             ROUT0404
  201 IF (STPTIM.LT.TIME)      GO TO 801                                ROUT0405
  202 QUAL = BUFDAT(NPT,1)                                              ROUT0406
      LOUTL = KOUTL                                                     ROUT0407
      DO 204 I=1,4                                                      ROUT0408
      DATA(I) = BUFDAT(NPT,I+2)                                         ROUT0409
      GO TO N203, (203,204)                                             ROUT0410
  203 IF (DATA(I).GE.0.)       LOUTL = .FALSE.                          ROUT0411
  204 IQL(I) = 0                                                        ROUT0412
      IF (LOUTL)               GO TO 100                                ROUT0413
      IF (IQUAL.EQ.0)          GO TO 206                                ROUT0414
      IF (IQUAL.EQ.7)          GO TO N204, (100,205)                    ROUT0415
  205 IQL(4) = IQUAL/4                                                  ROUT0416
      IQL(1) = IQUAL-4*IQL(4)                                           ROUT0417
      IQL(3) = IQL(1)/2                                                 ROUT0418
      IQL(2) = IQL(1)-2*IQL(3)                                          ROUT0419
      IQL(1) = IQL(2)                                                   ROUT0420
  206 CONTINUE                                                          ROUT0421
      IF (KTAU.NE.0)           GO TO 207                                ROUT0422
      TAU      = DATA(4)                                                ROUT0423
      DATA(4) = DATIND(10)                                              ROUT0424
      BIAS(1) = DATIND(15)+SER(10,1)/TAU                                ROUT0425
  207 CONTINUE                                                          ROUT0426
C                                                                       ROUT0427
C     COMPUTE VEHICLE TIME AND STATE                                    ROUT0428
C                                                                       ROUT0429
C     RECEPTION TIME                                                    ROUT0430
  210 CONTINUE                                                          ROUT0431
      STIMR = TFIRST+TIME                                               ROUT0432
      UTIMR = STIMR+SER(4,1)+SER(5,1)*STIMR                             ROUT0433
      ETIMR = UTIMR+DELDAR(1)+DELDAR(2)*UTIMR                           ROUT0434
      III = 1                                                           ROUT0435
      D(2) = (ETIMR-TBF)/HBF                                            ROUT0436
C                                                                       ROUT0437
C     T**N/N-FACTORIAL                                                  ROUT0438
  220 D(1) = FLT(1)                                                     ROUT0439
      DO 221 I=2,8                                                      ROUT0440
  221 D(I+1) = D(2)*D(I)/FLT(I)                                         ROUT0441
      GO TO (230,251,262,251) ,III                                      ROUT0442
C                                                                       ROUT0443
C     COMPUTE DOWN-LEG DELAY TIME                                       ROUT0444
  230 D(9) = 0.D0                                                       ROUT0445
      DO 231 I=1,8                                                      ROUT0446
  231 D(9) = D(9)+D(I)*VBF(6,I)                                         ROUT0447
      ETIMV = ETIMR-D(9)                                                ROUT0448
      ETIMT = ETIMV-D(9)                                                ROUT0449
```

```
      IF (ETIMV.LE.TFF)       GO TO 250                                 ROUT0450
C                                                                       ROUT0451
C     SET ICS FOR NEW INTERPOLATION TABLES                              ROUT0452
  240 LTRAJ = .TRUE.                                                    ROUT0453
      III = 4                                                           ROUT0454
      D(2) = FLT(7)                                                     ROUT0455
      GO TO 220                                                         ROUT0456
  241 CONTINUE                                                          ROUT0457
      DO 242 I=1,3                                                      ROUT0458
      SPCDAR(I)   = STT(I,2)                                            ROUT0459
  242 SPCDAR(I+3) = STT(I,1)                                            ROUT0460
      ETIMVA = TFF                                                      ROUT0461
      TBF = ETIMVA                                                      ROUT0462
      VBF(6,1) = D(9)                                                   ROUT0463
      NBY = 100+LCB                                                     ROUT0464
      GO TO 999                                                         ROUT0465
C                                                                       ROUT0466
C     INTERPOLATE FOR VEHICLE STATE                                     ROUT0467
  250 III = 2                                                           ROUT0468
      D(2) = (ETIMV-TBF)/HBF                                            ROUT0469
      GO TO 220                                                         ROUT0470
  251 CONTINUE                                                          ROUT0471
      CALL DMPLY (VBF,D,STT,5,8,2,6,1,5,0)                              ROUT0472
      DO 252 I=1,3                                                      ROUT0473
  252 STT(I,2) = RBF(I)+HBF*STT(I,2)                                    ROUT0474
      GO TO (999,253,999,241) ,III                                      ROUT0475
  253 CONTINUE                                                          ROUT0476
      CALL DEQTR (ETIMV,D(10))                                          ROUT0477
      D(2) = STT(5,1)+D(12)                                             ROUT0478
      D(3) = STT(4,1)                                                   ROUT0479
      D(4) = D(12)                                                      ROUT0480
      D(5) = D(3)*DCOS(D(2))                                            ROUT0481
      D(6) = ETIMV-DELDAR(1)-DELDAR(2)*ETIMV                            ROUT0482
      CALL DEHA (D(6),D(5),D(1),OMEGA)                                  ROUT0483
      GHA = D(1)                                                        ROUT0484
      CALL DGTRN (D(16),NM,D,4)                                         ROUT0485
      CALL DGTSN (D(25),0,D(11),D(10),D(13))                            ROUT0486
      CALL DMVTRN (D(25),D(16),D,2,3)                                   ROUT0487
      DO 254 I=1,9                                                      ROUT0488
  254 D(I+9) = 0.D0                                                     ROUT0489
      DO 255 I=1,9,4                                                    ROUT0490
  255 D(I+9) = 1.D0                                                     ROUT0491
      D(19) = ETIMV-ETIMR                                               ROUT0492
      D(21) = ETIMV-ETIMT                                               ROUT0493
      D(20) = D(19)+TAU                                                 ROUT0494
      D(22) = D(21)+TAU                                                 ROUT0495
      DO 256 I=1,4                                                      ROUT0496
      D(10) = DCOS(OMEGA*D(I+18))                                       ROUT0497
      D(13) = DSIN(OMEGA*D(I+18))                                       ROUT0498
      D(11) =-D(13)                                                     ROUT0499
      D(14) = D(10)                                                     ROUT0500
  256 CALL DMVTRN (D,D(10),TB2C(1,I),1,3)                               ROUT0501
C                                                                       ROUT0502
C     LOAD SPACECRAFT STATE                                             ROUT0503
  260 CONTINUE                                                          ROUT0504
      DO 261 I=1,3                                                      ROUT0505
      XV(I)   = STT(I,2)                                                ROUT0506
  261 XV(I+3) = STT(I,1)                                                ROUT0507
      D(2) = (ETIMV-TBF-TAU)/HBF                                        ROUT0508
      III = 3                                                           ROUT0509
      GO TO 220                                                         ROUT0510
  262 CONTINUE                                                          ROUT0511
      CALL DMPLY (VBF,D(2),XV(7),3,8,2,6,-1,3,0)                        ROUT0512
      DO 263 I=1,3                                                      ROUT0513
  263 XV(I+6) = XV(I+6)*HBF+RBF(I)                                      ROUT0514
C                                                                       ROUT0515
C     COMPUTE OBSERVABLES                                               ROUT0516
  290 CONTINUE                                                          ROUT0517
      GO TO N290, (291,292,293,294)                                     ROUT0518
C     C-BAND                                                            ROUT0519
  291 CALL CBDAT                                                        ROUT0520
      GO TO 300                                                         ROUT0521
C     GODDARD                                                           ROUT0522
  292 CALL GRDAT                                                        ROUT0523
      GO TO 300                                                         ROUT0524
```

```
C     S-BAND                                                            ROUT0525
  293 CALL SBDAT                                                        ROUT0526
      GO TO 300                                                         ROUT0527
C     DSIF                                                              ROUT0528
  294 CALL DSDAT (CHA)                                                  ROUT0529
      GO TO 300                                                         ROUT0530
C                                                                       ROUT0531
C**** COMPUTE RESIDUALS AND MOMENTS                                     ROUT0532
C                                                                       ROUT0533
C     RESIDUALS                                                         ROUT0534
  300 CONTINUE                                                          ROUT0535
      IQUAL = 10000                                                     ROUT0536
      DO 319 I=1,4                                                      ROUT0537
      KDATA(I) = .FALSE.                                                ROUT
      IQUAL = IQUAL+IQL(I)*NQUAL(I)                                     ROUT0538
      IF (LSKIP(I))            GO TO 319                                ROUT0539
      IF (DATA(I).EQ.YTEST)    GO TO 319                                ROUT0540
      GO TO N300, (301,302)                                             ROUT0541
  301 IF (IQL(I).GT.0)         GO TO 319                                ROUT0542
  302 IF (DATA(I).GE.0.)       GO TO 304                                ROUT0543
      GO TO N302, (303,319)                                             ROUT0544
  303 DATA(I)  =-DATA(I)                                                ROUT0545
  304 DATA(I)  = DATA(I)-OBS(1,I)-OBIAS(I)                              ROUT0546
      KDATA(I) = .TRUE.                                                 ROUT0547
      STP      = DATA(I)/YMOD(I)+0.5                                    ROUT0548
      IF (STP.LT.0.)           STP = STP-1.                             ROUT0549
      STP      = AINT(STP)                                              ROUT0550
      DATA(I)  = DATA(I)-STP*YMOD(I)                                    ROUT0551
C                                                                       ROUT0552
C     MOMENTS                                                           ROUT0553
  310 CONTINUE                                                          ROUT0554
      NSUM (I) = NSUM (I)+1                                             ROUT0555
      SUM  (I) = SUM  (I)+DATA(I)                                       ROUT0556
      SUMSQ(I) = SUMSQ(I)+DATA(I)*DATA(I)                               ROUT0557
  319 CONTINUE                                                          ROUT0558
      GO TO N319, (100,400,500)                                         ROUT0559
C                                                                       ROUT0560
C**** TAPE WRITE AND LIST                                               ROUT0561
C                                                                       ROUT0562
C     LOAD TIME POINT INTO BUFFER                                       ROUT0563
  400 CONTINUE                                                          ROUT0564
      NRPTS = NRPTS+1                                                   ROUT0565
      BUFRSL(1,NRPTS) = QUAL                                            ROUT0566
      BUFRSL(2,NRPTS) = TIME                                            ROUT0567
      DO 402 I=1,4                                                      ROUT0568
  402 BUFRSL(I+2,NRPTS) = DATA(I)                                       ROUT0569
      DO 404 I=1,6                                                      ROUT0570
  404 DBUFRL(I+3,NRPTS) = XV(I)                                         ROUT0571
      IF (NRPTS.LT.14)         GO TO N404, (100,500,810)                ROUT0572
  406 GO TO N406, (410,430,440)                                         ROUT0573
C                                                                       ROUT0574
C     SET UP INDRSL                                                     ROUT0575
  410 CONTINUE                                                          ROUT0576
      NRPOS = NRPOS+1                                                   ROUT0577
      NRBLK = NRBLK+1                                                   ROUT0578
      TRFRST = TFIRST+BUFRSL(2,1)                                       ROUT0579
      TRLAST = TFIRST+TIME                                              ROUT0580
      GO TO N410, (420,425,450,455)                                     ROUT0581
C                                                                       ROUT0582
C     TITLE TAPE LISTING                                                ROUT0583
  420 CONTINUE                                                          ROUT0584
      ASSIGN 425 TO N410                                                ROUT0585
      ASSIGN 425 TO N825                                                ROUT0586
      WRITE (6,641)                                                     ROUT0587
      IF (NRLIST-3)            421,422,425                              ROUT0588
  421 WRITE (6,642)                                                     ROUT0589
      GO TO 425                                                         ROUT0590
  422 WRITE (6,643)                                                     ROUT0591
C                                                                       ROUT0592
C     LIST  ,INDRSL,                                                    ROUT0593
  425 WRITE (6,644) (INDRSL(I),I=1,8),(DINDRL(I),I=5,8)                 ROUT0594
      GO TO N425, (440,450,830)                                         ROUT0595
C                                                                       ROUT0596
C     TITLE ,BUFRSL,                                                    ROUT0597
  430 ASSIGN 440 TO N406                                                ROUT0598
```

```
      ASSIGN 440 TO N825                                                ROUT0599
      N = 1                                                             ROUT0600
      IF (NRLIST.GE.4)          N = 4                                   ROUT0601
      WRITE (6,645) (IDUAL(I),I=1,N)                                    ROUT0602
  435 CONTINUE                                                          ROUT0603
      WRITE (6,646) (LABEL(I),LABEL(I+4),I=1,4),(LABEL(I),I=9,12)       ROUT0604
      GO TO N435, (436,440)                                             ROUT0605
  436 WRITE (6,647) (I,I=1,6)                                           ROUT0606
C                                                                       ROUT0607
C     LIST  ,BUFRSL,                                                    ROUT0608
  440 CONTINUE                                                          ROUT0609
      DO 442 J=1,NRPTS                                                  ROUT0610
      WRITE (6,648) (BUFRSL(I,J),I=1,6)                                 ROUT0611
      GO TO N440, (441,442)                                             ROUT0612
  441 WRITE (6,649) (BUFRSL(I,J),I=7,18,2)                              ROUT0613
  442 CONTINUE                                                          ROUT0614
      GO TO N442, (450,455,825)                                         ROUT0615
C                                                                       ROUT0616
C     WRITE TAPE RECORD PAIR                                            ROUT0617
  450 WRITE (11) INDRSL                                                 ROUT0618
      WRITE (11) BUFRSL                                                 ROUT0619
      NRKONT = 1                                                        ROUT0620
      NRECT  = 0                                                        ROUT0621
      WRITE (11) NRPOS,NQUAL(4),IRSL                                    ROUT0622
      BACKSPACE 11                                                      ROUT0623
  455 NRPTS = 0                                                         ROUT0624
      GO TO N404, (100,500,810)                                         ROUT0625
C                                                                       ROUT0626
C**** PLOT RESIDUALS                                                    ROUT0627
C                                                                       ROUT0628
  500 CONTINUE                                                          ROUT0629
      CALL RSPLOT(0)                                                    ROUT0630
      GO TO 100                                                         ROUT0631
C                                                                       ROUT0632
C**** POSTLOGUE                                                         ROUT0633
C                                                                       ROUT0634
  800 BACKSPACE 10                                                      ROUT0635
  801 NTP = 4                                                           ROUT0636
C                                                                       ROUT0637
C     DUMP INCOMPLETE BUFFER                                            ROUT0638
  802 IF (NRPTS.EQ.0)           GO TO 810                               ROUT0639
      ASSIGN 810 TO N404                                                ROUT0640
      GO TO 406                                                         ROUT0641
C                                                                       ROUT0642
C     TERMINATE PLOT                                                    ROUT0643
  810 IF (NRPLOT.EQ.0)          GO TO 830                               ROUT0644
      CALL RSPLOT(-1)                                                   ROUT0645
      IF (NRLIST-2)             830,811,820                             ROUT0646
  811 IF (NRTAPE.EQ.0)          GO TO 830                               ROUT0647
C                                                                       ROUT0648
C     PREPARE TAPE FOR READING                                          ROUT0649
  820 CONTINUE                                                          ROUT0650
      DO 822 I=1,NRBLK                                                  ROUT0651
      BACKSPACE 11                                                      ROUT0652
  822 BACKSPACE 11                                                      ROUT0653
  825 CONTINUE                                                          ROUT0654
      READ  (11) INDRSL                                                 ROUT0655
      IF (NRECT.GT.0)           GO TO 826                               ROUT0656
      READ  (11) BUFRSL                                                 ROUT0657
      GO TO N825, (420,425,430,440)                                     ROUT0658
  826 BACKSPACE 11                                                      ROUT0659
C                                                                       ROUT0660
C     REPOSITION TAPE                                                   ROUT0661
  830 IF (NRTAPE.NE.0)          GO TO 840                               ROUT0662
      IF (NRPOS.EQ.NRSEND)      GO TO 840                               ROUT0663
      DO 832 I=1,NRBLK                                                  ROUT0664
      BACKSPACE 11                                                      ROUT0665
  832 BACKSPACE 11                                                      ROUT0666
      NRPOS = NRSEND                                                    ROUT0667
      WRITE (11) NRPOS,NQUAL(4),IRSL                                    ROUT0668
      BACKSPACE 11                                                      ROUT0669
C                                                                       ROUT0670
C     OUTPUT MOMENTS                                                    ROUT0671
  840 IF (NRLIST.EQ.0)          GO TO 999                               ROUT0672
      WRITE (6,681) (LABEL(I),LABEL(I+4),I=1,4),(LABEL(I),I=9,12)       ROUT0673
```

```
      DO 842 I=1,4                                                      ROUT0674
      STP = NSUM(I)                                                     ROUT0675
      SUM  (I) = SUM(I)/STP                                             ROUT0676
      DATA (4) = (SUMSQ(I)-SUM(I)*SUM(I))/(STP-1.)                      ROUT0677
      DATA (I) = DSQRT(DATA(4))                                         ROUT0678
  842 SUMSQ(I) = SUMSQ(I)/STP                                           ROUT0679
      WRITE (6,682) SUM ,SUMSQ ,DATA ,NSUM                              ROUT0680
C                                                                       ROUT0681
C     EXIT                                                              ROUT0682
  999 NRSPCS = NRPOS                                                    ROUT0683
      NRSEND = NRPOS                                                    ROUT0684
      RETURN                                                            ROUT0685
      END
```

Subroutine: RØP

Purpose: Residual output program. Accepts the residual and estimate tapes written by the DCP and lists and/or plots residuals.

Common storages required: /ESTCØM/,/PØTCØM/,/RSLCØM/

Subroutines required: DATØUP, ØVRLYD, RSPLØT

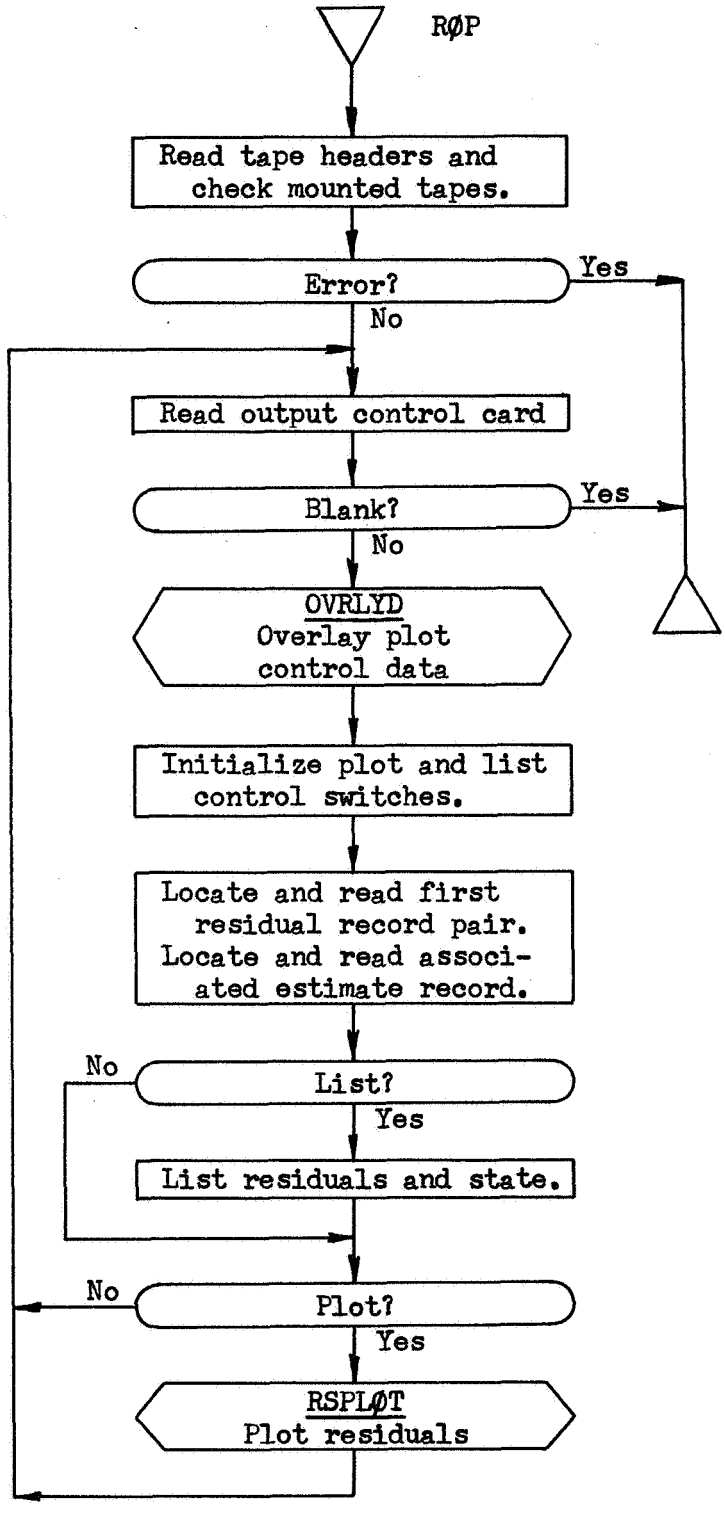
RØP
Read tape headers and check mounted tapes.
Error?
Yes
No
Read output control card
Blank?
Yes
No
OVRLYD
Overlay plot control data
Initialize plot and list control switches.
Locate and read first residual record pair. Locate and read associated estimate record.
No
List?
Yes
List residuals and state.
No
Plot?
Yes
RSPLØT
Plot residuals

```
$IBFTC MC138I  XR3,M94,NODD,LIST
C     ROP - RESIDUAL OUTPUT PROGRAM                                     ROP 0001
C                                                                       ROP 0002
C     DEVELOPED BY  PHILCO-FORD CORPORATION                             ROP 0003
C               FOR GODDARD SPACE FLIGHT CENTER                         ROP 0004
C               CONTRACT NAS5-9939                                      ROP 0005
C                                                                       ROP 0006
C     REFERENCE TR-DA1508, PROGRAM DESCRIPTION AND THEORETICAL BASIS,   ROP 0007
C                          ORBIT DETERMINATION PROGRAM                  ROP 0008
C               TR-DA1509, SUBROUTINE DESCRIPTIONS AND LISTINGS,        ROP 0009
C                          ORBIT DETERMINATION PROGRAM                  ROP 0010
C               TR-DA1510, INPUT-OUTPUT SUMMARY,                        ROP 0011
C                          ORBIT DETERMINATION PROGRAM                  ROP 0012
C                                                                       ROP 0013
C     DECEMBER 1967                                                     ROP 0014
C                                                                       ROP 0015
      COMMON             /ESTCOM/CEST(804)                              ROP 0016
      DIMENSION           NAMSTA(20)                                    ROP 0017
      DOUBLE PRECISION    SPCDAN (6) ,EFEDAN(14) ,PREDAN (4) ,DELDAN (2) ROP 0018
     1                   ,EHADAN(24) ,MHADAN(24) ,XHADAN(24) ,SE (14,20) ROP 0019
     2                   ,ETIMVA     ,TX2Z (3,3)                        ROP 0020
      EQUIVALENCE                 (CEST(  1),NESPOS) ,(CEST(  2),NBY   ) ROP 0021
     1                          ,(CEST(  3),NBD   ) ,(CEST(  4),NBX   ) ROP 0022
     2                          ,(CEST(  5),NBH   ) ,(CEST(  6),NUMSTA) ROP 0023
     3      ,(CEST(  7),NAMSTA) ,(CEST( 27),KOUNTN) ,(CEST( 29),ETIMVA) ROP 0024
     4      ,(CEST( 31),TX2Z  ) ,(CEST( 49),SPCDAN) ,(CEST( 61),EFEDAN) ROP 0025
     5      ,(CEST( 89),PREDAN) ,(CEST( 97),DELDAN) ,(CEST(101),EHADAN) ROP 0026
     6      ,(CEST(149),MHADAN) ,(CEST(197),XHADAN) ,(CEST(245),SE    ) ROP 0027
C                                                                       ROP 0028
      COMMON             /POTCOM/PLOTC(42)                              ROP 0029
      LOGICAL             KDATA(4)                                      ROP 0030
      DIMENSION           DATA  (4) ,SYMBOL(4)                          ROP 0031
     1                   ,DATMAX(4) ,LABEL(12)                          ROP 0032
      EQUIVALENCE                 (PLOTC(11),DATMAX) ,(PLOTC(15),LABEL ) ROP 0033
     1                          ,(PLOTC(10),DT    ) ,(PLOTC(27),SYMBOL) ROP 0034
     2    ,(PLOTC( 2),DATA  ) ,(PLOTC( 6),KDATA ) ,(PLOTC( 1),TIME  )  ROP 0035
C                                                                       ROP 0036
      COMMON             /RSLCOM/INDRSL(16),BUFRSL(18,14)               ROP 0037
      DOUBLE PRECISION    DBUFRL(9,14)                                  ROP 0038
      EQUIVALENCE                 (INDRSL( 2),NREOT ) ,(INDRSL( 1),NRPOS ) ROP 0039
     1                          ,(INDRSL( 7),NREST ) ,(INDRSL( 5),NRPTS ) ROP 0040
     2   ,(INDRSL( 8),MRTYPE) ,(INDRSL( 3),NRKONT) ,(INDRSL( 6),NRSSTA) ROP 0041
      EQUIVALENCE        (BUFRSL(1,1),DBUFRL)                           ROP 0042
C                                                                       ROP 0043
      LOGICAL             KPLOT    ,LINIT ,LPLOT                        ROP 0044
     1                   ,LDATA(4) ,LLIST ,LTAPE                        ROP 0045
      DOUBLE PRECISION    PCNTRL(6),PMAX(4)                             ROP 0046
      DIMENSION           BODNAM(11) ,HEAD   (4) ,IDSTAT (7) ,PRENAM (4) ROP 0047
     1                   ,D     (10) ,HEADER(11) ,LBM (12,4) ,SPCNAM (6) ROP 0048
     2                   ,DELNAM (2) ,HEADES(11) ,NN     (6) ,STBNAM(10) ROP 0049
     3                   ,EFENAM(14) ,HEADRL(11) ,NPLOT  (4) ,SYM  (4,4) ROP 0050
     4                   ,HARNAM(24) ,ICNTRL (8) ,NQUAL  (4) ,YN     (2) ROP 0051
      EQUIVALENCE        (QUAL,IQL)                                     ROP 0052
      EQUIVALENCE                 (ICNTRL(5),NPLOT ) ,(ICNTRL(8),NPLOT4) ROP 0053
     1                          ,(ICNTRL(5),NPLOT1) ,(ICNTRL(1),NRECRD) ROP 0054
     2                          ,(ICNTRL(6),NPLOT2) ,(ICNTRL(2),NRLIST) ROP 0055
     3    ,(ICNTRL(4),NPLBAD) ,(ICNTRL(7),NPLOT3) ,(ICNTRL(3),NROVER)  ROP 0056
      EQUIVALENCE        (PCNTRL(3),PMAX  ) ,(PCNTRL(1),PTIME )         ROP 0057
     1                  ,(PCNTRL(2),PSCALE)                             ROP 0058
C                                                                       ROP 0059
      DATA     BODNAM/6HMERCRY,6HVENUS ,6HEARTH ,6HMARS  ,6HJUPTER      ROP 0060
     1               ,6HSATURN,6HURANUS,6HNEPTUN,6HPLUTO ,6HSUN         ROP 0061
     2               ,6HMOON  /                                         ROP 0062
      DATA     BLANK /6H      /                                         ROP 0063
      DATA     HEAD  /6HSTATE ,6HAND   ,6HRESIDU,6HALS   /              ROP 0064
      DATA     YN    /6HYES   ,6HNO    /                               ROP 0065
      DATA     LBM   /6HAZIMUT,6HELEVAT,6HRANGE ,6H                     ROP 0066
     1               ,6HH     ,6HION   ,6H      ,6H                    ROP 0067
     1               ,6HRAD   ,6HRAD   ,6HKM    ,6H                    ROP 0068
     2               ,6HX     ,6HY     ,6HRANGE ,6HDOPPLE              ROP 0069
     2               ,6H      ,6H      ,6H      ,6HR                   ROP 0070
     2               ,6HRAD   ,6HRAD   ,6HKM    ,6HCYCLES              ROP 0071
     3               ,6HX     ,6HY     ,6HRANGE ,6HDOPPLE              ROP 0072
     3               ,6H      ,6H      ,6H      ,6HR                   ROP 0073
     3               ,6HRAD   ,6HRAD   ,6HSEC   ,6HCYCLES              ROP 0074
```

```
     4                ,6HHOUR A,6HDECLIN,6H       ,6HDOPPLE                ROP 0075
     4                ,6HNGLE   ,6HATION ,6H      ,6HR                     ROP 0076
     4                ,6HRAD    ,6HRAD   ,6H      ,6HCYCLES/               ROP 0077
      DATA     SYM    /1HA,1HE,1HR,1HZ ,1HX,1HY,1HR,1HD                   ROP 0078
     1                ,1HX,1HY,1HR,1HD ,1HH,1HC,1HR,1HD/                  ROP 0079
      DATA     IDSTAT/6HSPCRFT,6HEFEMRS,6HPRESUR,6HDELTIM,6HHARM03        ROP 0080
     1                ,6HHARM11,6HHARMXX/                                 ROP 0081
      DATA     SPCNAM/3HX  ,3HY  ,3HZ  ,3HXD ,3HYD ,3HZD /                ROP 0082
      DATA     EFENAM/3HUME,3HUVE,3HUEA,3HUMA,3HUJU,3HUSA,3HUUR,3HUNE     ROP 0083
     1                ,3HUPL,3HUSU,3HUMO,3HUBA,3HAU ,3HMER/               ROP 0084
      DATA     PRENAM/3HSPR,3HDR1,3HDR2,3HVNT/                            ROP 0085
      DATA     DELNAM/3HDT ,3HDTD/                                        ROP 0086
      DATA     HARNAM/3HJ20,3HJ30,3HJ40,3HJ50,3HJ60,3HJ70,3HJ21,3HL21     ROP 0087
     1                ,3HJ22,3HL22,3HJ31,3HL31,3HJ32,3HL32,3HJ33,3HL33    ROP 0088
     2                ,3HJ41,3HL41,3HJ42,3HL42,3HJ43,3HL43,3HJ44,3HL44/   ROP 0089
      DATA     STBNAM/3HNOR,3HEST,3HDWN,3HTM1,3HTM2,3HLIT,3HAN1,3HAN2     ROP 0090
     1                ,3HRNG,3HDOP/                                       ROP 0091
      DATA     NN     / 3, 1, 1, 4, 1, 4/                                 ROP 0092
      DATA     NQUAL / 1000, 100,  10,   1/                               ROP 0093
      DATA     PCNTRL/ 2*0.D0 ,2*0.1D0 ,2*1.D2 /                          ROP 0094
      DATA     YTEST /-0.12345678E20/                                     ROP 0095
C                                                                         ROP 0096
 5001 FORMAT(I6,11A6)                                                     ROP 0097
 5100 FORMAT(I4,34I2)                                                     ROP 0098
C                                                                         ROP 0099
 6001 FORMAT(23H1RESIDUAL TAPE HEADER ',11A6,1H')                         ROP 0100
 6002 FORMAT(23H ESTIMATE TAPE HEADER ',11A6,1H')                         ROP 0101
 6003 FORMAT(20H DOES NOT AGREE WITH/23H INPUT HEADER CARD     ',11A6,1H'ROP 0102
     1/15H CANNOT PROCEED)                                                ROP 0103
 6100 FORMAT(89H1NRECRD   NRLIST   OVERLAY   PLOT BAD PTS   PLOT ANG1    ROP 0104
     1PLOT ANG2   PLOT RNGE   PLOT DOPL/1X,I5,I5,7X,A3,2(10X,A3),3(9X,A3ROP 0105
     2))                                                                  ROP 0106
 6220 FORMAT(/69H0PARAMETERS USED FOR THIS RESIDUAL RECORD ARE TAKEN FROROP 0107
     1M RECORD PAIR ,I3,21H OF THE ESTIMATE TAPE/4X,5HGROUP,3X,4HNAME,12ROP 0108
     2X,5HVALUE,2(25X,4HNAME,12X,5HVALUE))                                ROP 0109
 6221 FORMAT(1H0,A6,23H IS THE CENTRAL BODY ON)                           ROP 0110
 6222 FORMAT(25H0COORDINATES RELATIVE TO ,A6,33H, MEAN EQUATOR, EQUINOX ROP 0111
     1OF 1950.0)                                                          ROP 0112
 6223 FORMAT(1H0,2X,A6,4X,A3,D26.16,2(7X,A3,D26.16)/(13X,A3,D26.16,7X,A3ROP 0113
     1,D26.16,7X,A3,D26.16))                                              ROP 0114
 6224 FORMAT(26H0DRAG PARAMETERS APPLY TO ,A6)                            ROP 0115
 6225 FORMAT(30H0GRAVITY TERMS BELOW APPLY TO ,A6)                        ROP 0116
 6226 FORMAT(21H0RECEIVING STATION IS)                                    ROP 0117
 6300 FORMAT(//6H0LIST ,2(A6,A4))                                         ROP 0118
 6301 FORMAT(19H0NPT QUAL      TIME,5X,4(4X,2A6)/15X,5H(SEC),4(10X,A6)) ROP 0119
 6302 FORMAT(35X,61HVEHICLE STATE IN EARTH CENTERED EQUATOR OF 1950.0 CORROP 0120
     1ORDINATES/18X,6(10X,2HX(,I1,1H))/1H )                               ROP 0121
 6311 FORMAT(1X,I3,I5,F11.2,4X,4E16.8)                                    ROP 0122
 6312 FORMAT(24X,6E16.8)                                                  ROP 0123
 6400 FORMAT(15H1PLOT RESIDUALS)                                          ROP 0124
C                                                                         ROP 0125
C**** INITIALIZE                                                          ROP 0126
C                                                                         ROP 0127
C     CHECK MOUNTED TAPE IDENTIFICATION                                   ROP 0128
    1 CONTINUE                                                            ROP 0129
      NESPOS = 0                                                          ROP 0130
      NRPOS  = 0                                                          ROP 0131
      READ  (5,5001) IFTEST,HEADER                                        ROP 0132
      READ  (11)     HEADRL                                               ROP 0133
      WRITE (6,6001) HEADRL                                               ROP 0134
      IF (IFTEST.NE.0)              GO TO 3                               ROP 0135
      DO 2 I=1,11                                                         ROP 0136
    2 IF (HEADER(I).NE.HEADRL(I))   GO TO 9                               ROP 0137
    3 READ  (5,5001) IFTEST,HEADER                                        ROP 0138
      LTAPE = .TRUE.                                                      ROP 0139
      IF (IFTEST.NE.0)              GO TO 5                               ROP 0140
      DO 4 I=1,11                                                         ROP 0141
    4 IF (HEADER(I).NE.BLANK)       GO TO 5                               ROP 0142
      LTAPE = .FALSE.                                                     ROP 0143
      GO TO 100                                                           ROP 0144
    5 READ  (12)     HEADES                                               ROP 0145
      WRITE (6,6002) HEADES                                               ROP 0146
      IF (IFTEST.NE.0)              GO TO 100                             ROP 0147
      DO 6 I=1,11                                                         ROP 0148
    6 IF (HEADER(I).NE.HEADES(I))   GO TO 9                               ROP 0149
```

```
      GO TO 100                                                         ROP 0150
C                                                                       ROP 0151
C     ERROR                                                             ROP 0152
    9 WRITE (6,6003) HEADER                                             ROP 0153
      GO TO 999                                                         ROP 0154
C                                                                       ROP 0155
C**** INPUT CONTROL                                                     ROP 0156
C                                                                       ROP 0157
C     READ CONTROL CARD AND OVERLAY DATA                                ROP 0158
  100 CONTINUE                                                          ROP 0159
      READ  (5,5100) ICNTRL                                             ROP 0160
      IF (NRECRD.EQ.0)          GO TO 999                               ROP 0161
      WRITE (6,6100) NRECRD ,NRLIST                                     ROP 0162
     1               ,YN(NROVER+1) ,YN(NPLBAD+1) ,YN(NPLOT1+1)          ROP 0163
     2               ,YN(NPLOT2+1) ,YN(NPLOT3+1) ,YN(NPLOT4+1)          ROP 0164
      IF (NROVER.NE.0)          CALL OVRLYD (PCNTRL)                    ROP 0165
      LLIST = .TRUE.                                                    ROP 0166
      LPLOT = .FALSE.                                                   ROP 0167
      DO 102 I=1,4                                                      ROP 0168
      LDATA(I) = .FALSE.                                                ROP 0169
      IF (NPLOT(I).EQ.0)        GO TO 102                               ROP 0170
      LDATA(I) = .TRUE.                                                 ROP 0171
      LPLOT    = .TRUE.                                                 ROP 0172
  102 CONTINUE                                                          ROP 0173
C                                                                       ROP 0174
C     LOCATE FIRST RECORD PAIR                                          ROP 0175
  110 LINIT = .TRUE.                                                    ROP 0176
      N = NRECRD-NRPOS-1                                                ROP 0177
      IF (N) 111,120,113                                                ROP 0178
  111 N =-N                                                             ROP 0179
      DO 112 I=1,N                                                      ROP 0180
      BACKSPACE 11                                                      ROP 0181
  112 BACKSPACE 11                                                      ROP 0182
      GO TO 120                                                         ROP 0183
  113 DO 114 I=1,N                                                      ROP 0184
      READ  (11) SKIP                                                   ROP 0185
  114 READ  (11) SKIP                                                   ROP 0186
C                                                                       ROP 0187
C     READ AND IDENTIFY RECORD PAIR                                     ROP 0188
  120 CONTINUE                                                          ROP 0189
      READ  (11) INDRSL                                                 ROP 0190
      IF (NREOT.LE.0)           GO TO 121                               ROP 0191
      BACKSPACE 11                                                      ROP 0192
      GO TO 122                                                         ROP 0193
  121 READ  (11) BUFRSL                                                 ROP 0194
      IF (LINIT)                GO TO 200                               ROP 0195
      IF (NRKONT.NE.0)          GO TO 310                               ROP 0196
  122 IF (.NOT.LLIST)           GO TO 420                               ROP 0197
      LLIST = .FALSE.                                                   ROP 0198
      GO TO 110                                                         ROP 0199
C                                                                       ROP 0200
C**** INITIALIZE OUTPUT                                                 ROP 0201
C                                                                       ROP 0202
C     SET UP HEADINGS, LABELS                                           ROP 0203
  200 CONTINUE                                                          ROP 0204
      LINIT = .FALSE.                                                   ROP 0205
      IF (.NOT.LLIST)           GO TO 400                               ROP 0206
      DO 201 I=1,12                                                     ROP 0207
  201 LABEL(I)  = LBM(I,MRTYPE)                                         ROP 0208
      DO 202 I=1,4                                                      ROP 0209
      DATMAX(I) = PMAX(I)                                               ROP 0210
  202 SYMBOL(I) = SYM(I,MRTYPE)                                         ROP 0211
      IF (NRLIST.EQ.0)          GO TO 400                               ROP 0212
C                                                                       ROP 0213
C     LOCATE AND READ ESTIMATE RECORD                                   ROP 0214
  210 IF (NRLIST.LT.4)          GO TO 300                               ROP 0215
      NRLIST = NRLIST-4                                                 ROP 0216
      IF (.NOT.LTAPE)           GO TO 300                               ROP 0217
      IF (NREST.EQ.0)           GO TO 300                               ROP 0218
      N = NREST-NESPOS-1                                                ROP 0219
      IF (N) 211,215,213                                                ROP 0220
  211 N =-N                                                             ROP 0221
      DO 212 I=1,N                                                      ROP 0222
      BACKSPACE 12                                                      ROP 0223
  212 BACKSPACE 12                                                      ROP 0224
```

```
      GO TO 215                                                         ROP 0225
  213 DO 214 I=1,N                                                      ROP 0226
      READ  (12) SKIP                                                   ROP 0227
  214 READ  (12) SKIP                                                   ROP 0228
  215 CONTINUE                                                          ROP 0229
      READ  (12) CEST                                                   ROP 0230
      READ  (12) SKIP                                                   ROP 0231
C                                                                       ROP 0232
C     OUTPUT STATE ESTIMATE                                             ROP 0233
  220 CONTINUE                                                          ROP 0234
      WRITE (6,6220) NESPOS                                             ROP 0235
      I = NBY/100                                                       ROP 0236
      J = NBY-100*I                                                     ROP 0237
      WRITE (6,6221) BODNAM(J)                                          ROP 0238
      CALL DATOUP (ETIMVA,D,0)                                          ROP 0239
      IF (I.NE.0)   J = 3                                               ROP 0240
      WRITE (6,6222) BODNAM(J)                                          ROP 0241
      WRITE (6,6223) IDSTAT(1),(SPCNAM(I),SPCDAN(I),I=1,6)              ROP 0242
      WRITE (6,6223) IDSTAT(2),(EFENAM(I),EFEDAN(I),I=1,14)             ROP 0243
      WRITE (6,6224) BODNAM(J)                                          ROP 0244
      WRITE (6,6223) IDSTAT(3),(PRENAM(I),PREDAN(I),I=1,4)              ROP 0245
      WRITE (6,6223) IDSTAT(4),(DELNAM(I),DELDAN(I),I=1,2)              ROP 0246
      WRITE (6,6225) BODNAM(3)                                          ROP 0247
      WRITE (6,6223) IDSTAT(5),(HARNAM(I),EHADAN(I),I=1,24)             ROP 0248
      WRITE (6,6225) BODNAM(11)                                         ROP 0249
      WRITE (6,6223) IDSTAT(6),(HARNAM(I),MHADAN(I),I=1,24)             ROP 0250
      IF (NBX.EQ.0) GO TO 222                                           ROP 0251
      WRITE (6,6225) BODNAM(NBX)                                        ROP 0252
      WRITE (6,6223) IDSTAT(7),(HARNAM(I),XHADAN(I),I=1,24)             ROP 0253
  222 CONTINUE                                                          ROP 0254
      DO 223 I=1,NUMSTA                                                 ROP 0255
  223 IF (NRSSTA.EQ.NAMSTA(I)) INDSTA = I                               ROP 0256
      WRITE (6,6226) NRSSTA,(STENAM(I),SE(I,INDSTA),I=1,10)             ROP 0257
      IF (PSCALE.LE.0.)          GO TO 225                              ROP 0258
      DO 224 I=1,4                                                      ROP 0259
  224 DATMAX(I) = PSCALE*SE(I+10,INDSTA)                                ROP 0260
  225 IF (NRLIST.EQ.0)           GO TO 400                              ROP 0261
C                                                                       ROP 0262
C**** LIST RESIDUALS/STATE                                              ROP 0263
C                                                                       ROP 0264
C     HEADING                                                           ROP 0265
  300 CONTINUE                                                          ROP 0266
      ASSIGN 312 TO N310                                                ROP 0267
      ASSIGN 319 TO N312                                                ROP 0268
      N = NN(NRLIST)                                                    ROP 0269
      M = NN(NRLIST+3)                                                  ROP 0270
      WRITE (6,6300) (HEAD(I),I=N,M)                                    ROP 0271
      IF (NRLIST.EQ.2)           GO TO 301                              ROP 0272
      ASSIGN 311 TO N310                                                ROP 0273
      WRITE (6,6301) (LABEL(I),LABEL(I+4),I=1,4) ,(LABEL(I),I=9,12)     ROP 0274
      IF (NRLIST.EQ.1)           GO TO 302                              ROP 0275
  301 ASSIGN 313 TO N312                                                ROP 0276
      WRITE (6,6302) (I,I=1,6)                                          ROP 0277
  302 CONTINUE                                                          ROP 0278
C                                                                       ROP 0279
C     LIST                                                              ROP 0280
  310 IF (.NOT.LLIST)            GO TO 410                              ROP 0281
      DO 319 I=1,NRPTS                                                  ROP 0282
      GO TO N310, (311,312)                                             ROP 0283
  311 WRITE (6,6311) I,(BUFRSL(J,I),J=1,6)                              ROP 0284
  312 GO TO N312, (313,319)                                             ROP 0285
  313 WRITE (6,6312) (DRUFRL(J,I),J=4,9)                                ROP 0286
  319 CONTINUE                                                          ROP 0287
      GO TO 120                                                         ROP 0288
C                                                                       ROP 0289
C**** PLOT RESIDUALS                                                    ROP 0290
C                                                                       ROP 0291
C     INITIALIZE                                                        ROP 0292
  400 CONTINUE                                                          ROP 0293
      IF (.NOT.LPLOT)            GO TO 100                              ROP 0294
      IF (NRPTS.LE.1)            GO TO 100                              ROP 0295
      LLIST = .FALSE.                                                   ROP 0296
      DT = PTIME                                                        ROP 0297
      IF (DT.GE.0.)              GO TO 401                              ROP 0298
      TP = BUFRSL(1,2)-BUFRSL(1,1)                                      ROP 0299
```

```
      CT = 1.                                                           ROP 0300
      IF (TP.LT.1.) CT = 10.                                            ROP 0301
      DT = AINT(CT*TP)/CT                                               ROP 0302
  401 WRITE (6,6400)                                                    ROP 0303
      CALL RSPLOT(1)                                                    ROP 0304
      ASSIGN 412 TO N410                                                ROP 0305
      IF (NPLBAD.EQ.0)          GO TO 410                               ROP 0306
      ASSIGN 411 TO N410                                                ROP 0307
C                                                                       ROP 0308
C     CONTINUE PLOTTING                                                 ROP 0309
  410 DO 419 I=1,NRPTS                                                  ROP 0310
      TIME = BUFRSL(1,I)                                                ROP 0311
      QUAL = BUFRSL(2,I)                                                ROP 0312
      DO 412 J=1,4                                                      ROP 0313
      KDATA(I) = .FALSE.                                                ROP 0314
      DATA(I)  = BUFRSL(J+2,I)                                          ROP 0315
      IF (IQL.LT.NQUAL(J))      GO TO 411                               ROP 0316
      IQL = IQL-NQUAL(J)                                                ROP 0317
      GO TO N410, (411,412)                                             ROP 0318
  411 IF (.NOT.LDATA(J))        GO TO 412                               ROP 0319
      IF (DATA(I).EQ.YTEST)     GO TO 412                               ROP 0320
      KDATA(I) = .TRUE.                                                 ROP 0321
      KPLOT    = .TRUE.                                                 ROP 0322
  412 CONTINUE                                                          ROP 0323
      IF (.NOT.KPLOT)           GO TO 419                               ROP 0324
      CALL RSPLOT(0)                                                    ROP 0325
  419 CONTINUE                                                          ROP 0326
      GO TO 120                                                         ROP 0327
C                                                                       ROP 0328
C     TERMINATE PLOT                                                    ROP 0329
  420 IF (LINIT)                GO TO 100                               ROP 0330
      CALL RSPLOT(-1)                                                   ROP 0331
      GO TO 100                                                         ROP 0332
C                                                                       ROP 0333
  999 STOP                                                              ROP 0334
      END
```

Subroutine: RØTEQ

Purpose: RØTEQ evaluates elements of the rotation matrix which relates the general precession of the Earth's equator and the consequent retrograde motion of the equinox on the ecliptic. It is used to provide the transformation from mean equator, equinox of 1950.0 to mean equator, equinox of date.

Calling Sequence: CALL RØTEQ(TIME,A)

Input and Output

I/Ø	Symbolic Name or Location	Program Dimensions	Math Symbol	Data Dimensions or Units	Definition
I	TIME		T	days	Total number of days from 1950.0
Ø	A	(3,3)	A		Rotation matrix.

Common storages used: None

Subroutines required: None

```
$IBFTC MC1350  XR3
CMC1350  SUBROUTINE ROTEQ                                          ROTQ
      SUBROUTINE ROTEQ(TIME,A)                                     ROTQ0000
      DIMENSION A(3,3)                                             ROTQ0010
      T = TIME/36525.                                              ROTQ0020
      T2 = T*T                                                     ROTQ0030
      T3 = T2*T                                                    ROTQ0040
      A(1,1) = 1. - .00029697*T2 - .00000013*T3                    ROTQ0050
      A(1,2) = -.02234988*T - .00000676*T2 + .00000221*T3          ROTQ0060
      A(2,1) = -A(1,2)                                             ROTQ0070
      A(1,3) = -.00971711*T + .00000207*T2 + .00000096*T3          ROTQ0080
      A(3,1) = -A(1,3)                                             ROTQ0090
      A(2,2) = 1. - .00024976*T2 - .00000015*T3                    ROTQ0100
      A(2,3) = -.00010859*T2 - .00000003*T3                        ROTQ0110
      A(3,2) = A(2,3)                                              ROTQ0120
      A(3,3) = 1. - .00004721*T2 + .00000002*T3                    ROTQ0130
      RETURN                                                       ROTQ0140
      END                                                          ROTQ
```

Subroutine: RØVLEY

Purpose: To read fixed, floating and alphanumeric data into core. Certain conversions of the floating point data may be made automatically. A blank card terminates a set of data.

Calling Sequence: CALL RØVLEY (C,I,H)

Input and Output

I/Ø	Symbolic Name or Location	Program Dimensions	Math Symbol	Data Dimensions or Units	Definition
Ø	C				Array into which floating (decimal) data is to be read.
Ø	I				Array into which fixed (integer) data is to be read.
Ø	H				Array into which alphanumeric data is to be read.

Common storages used: None

Subroutines required: None

The function of subroutine RØVLEY is to centralize and facilitate the input of data to the various portions of the program requiring data. The data may be fixed point integers, floating point, or alphanumeric, with a given set of data including any combination of the three types.

A floating point input consists of two numbers, an integer k and a number x. The integer k is a subscript indicating the relative location in C in which the value x is to be stored, thus C(k) = x. The integer field width is 3 (I3) (integers must always be to the right of their field) and the value field width is 12 (E12.8). There may be up to four such pairs/card.

If k=0 and x≠0, x will be stored in the next successive location of C following the previous entry. If both are zero, reading is terminated if they are the first set on the card; otherwise the next card is processed.

Certain alphanumeric flags may be entered, starting in column 61 of a card. The legal flags and their meaning is given below.

Flag	Action
FT	Convert data from ft. to km.
FT/SEC	Convert data from ft/sec to km/sec.
NM	Convert data from n.m. to km.
NM/SEC	Convert data from n.m./sec to km/sec.
SQUARE	Square the value prior to storing in the C array.

It is important to note that these conversions apply to every value on the card, but do not carry over to the next card.

An I in column 61 of a card indicates that fixed point data will be on the following card(s). The first two k values on the I card (col 1-3 and col 16-18) specify the starting and finishing locations in I for data storage. The integer data on the following card(s) is entered with format 12I6, and are stored sequentially.

The word HEAD in columns 61-64 indicates that the next card contains 12 words of alphanumeric data. If the first k value is zero, the 12 words are stored in H(1) through H(12); if k≠0, they are stored in H(13) through H(24).

All data read by RØVLEY is written on the output tape.

```
$IBFTC MC139Q  XR3
      SUBROUTINE ROVLEY(C,IC,HED)                                       ROVL0010
CMC13RL   SUBROUTINE FOR INPUT USAGE TO C ARRAY  WITH INTEGERS, HEADER. ROVL0020
C                                                                       ROVL0030
      DIMENSION     C(1),     BUF(4),        IND(4),        UNIT(6)     ROVL0040
     1,   FACT(5),        IC(1),          HED(24)                       ROVL0050
      DATA (UNIT(I),I=1,6)/2HFT,6HFT/SEC,2HNM,6HNM/SEC,3HDEG,6HSQUARE/  ROVL0060
      DATA (FACT(I),I=1,5)/ 3.048E-4,3.048E-4,1.8519963,1.8519963       ROVL0070
     1,.0174532925/                                                     ROVL0080
      DATA  HEAD/4HHEAD/,HINT/1HI/                                      ROVL0090
      K=-1                                                              ROVL0120
10    L=1                                                               ROVL0130
      READ (5,501) (IND(I),BUF(I),I=1,4),UNT                            ROVL0140
501   FORMAT(4(I3,E12.8),A6)                                            ROVL0150
      IF(UNT .EQ. HEAD) GO TO 100                                       ROVL0160
      IF(UNT .EQ. HINT) GO TO 200                                       ROVL0170
      DO 11 I=1,5                                                       ROVL0180
      CVF=FACT(I)                                                       ROVL0190
      IF(UNT-UNIT(I))11,13,11                                           ROVL0200
11    CONTINUE                                                          ROVL0210
      L = 0                                                             ROVL0220
      IF(UNT - UNIT(6))13,12,13                                         ROVL0230
12    L = -1                                                            ROVL0240
13    CONTINUE                                                          ROVL0250
      IF (BUF) 15,14,15                                                 ROVL0260
14    IF(IND) 15,90,15                                                  ROVL0270
15    IF(K) 16,17,17                                                    ROVL0280
16    K =0                                                              ROVL0290
      WRITE (6,603)                                                     ROVL0300
603   FORMAT(1H1,40X,13HOVERLAY INPUT)                                  ROVL0310
   17 WRITE (6,602) (IND(I),BUF(I),I=1,4),UNT                           ROVL0320
      IF(L) 18,22,20                                                    ROVL0330
18    DO 19 I=1,4                                                       ROVL0340
19    BUF(I) = BUF(I)*BUF(I)                                            ROVL0350
602   FORMAT(4(5X,I3,E17.8),4X,A6)                                      ROVL0360
      GO TO 22                                                          ROVL0370
20    CONTINUE                                                          ROVL0380
      DO 21 I=1,4                                                       ROVL0390
21    BUF(I) = BUF(I)*CVF                                               ROVL0400
22    DO 25 I=1,4                                                       ROVL0410
      IF(IND(I))24,23,24                                                ROVL0420
23    IND(I) = LOC+1                                                    ROVL0430
      IF(BUF(I))24,10,24                                                ROVL0440
24    LOC = IND(I)                                                      ROVL0450
      C(LOC) = BUF(I)                                                   ROVL0460
25    CONTINUE                                                          ROVL0470
      GO TO 10                                                          ROVL0480
90    CONTINUE                                                          ROVL0490
      RETURN                                                            ROVL0500
 100  K1=IND(1)*12+1                                                    ROVL0510
      K2=K1+11                                                          ROVL0520
      READ (5,700) (HED(I),I=K1,K2)                                     ROVL0530
      IF(K) 101,102,102                                                 ROVL0540
101   K=0                                                               ROVL0550
      WRITE (6,603)                                                     ROVL0560
  102 WRITE (6,700) (HED(I),I=K1,K2)                                    ROVL0570
700   FORMAT(12A6)                                                      ROVL0580
      GO  TO 10                                                         ROVL0590
200   L=IND                                                             ROVL0600
      LK = IND(2)                                                       ROVL0610
      READ (5,701) (IC(J),J=L,LK)                                       ROVL0620
701   FORMAT(12I6)                                                      ROVL0630
      IF(K)201,202,202                                                  ROVL0640
201   K=0                                                               ROVL0650
      WRITE (6,603)                                                     ROVL0660
  202 WRITE (6,702) L,LK,(IC(J),J=L,LK) .                               ROVL0670
702   FORMAT(14H INTEGERS FROM ,I5,3H TO,I5/ (12I6))                    ROVL0680
      GO TO 10                                                          ROVL0690
      END                                                               ROVL0700
```

Subroutine: RSIDUL

Purpose: To control the order of trajectory integration and residual output for the residual link.

Calling Sequence: CALL RSIDUL (NRSPØS)

Input and Output

I/Ø	Symbolic Name or Location	Program Dimensions	Math Symbol	Data Dimensions or Units	Definition
IØ	NRSPØS				Residual tape position. The residual tape is positioned between record pairs NRSPØS and NRSPØS+1

Common storages used: /DCPCØM/,/ESRCØM/,/ESTCØM/,/SB3CØM/

Subroutines required: ØVRLYD,RESØUT,TRAJD

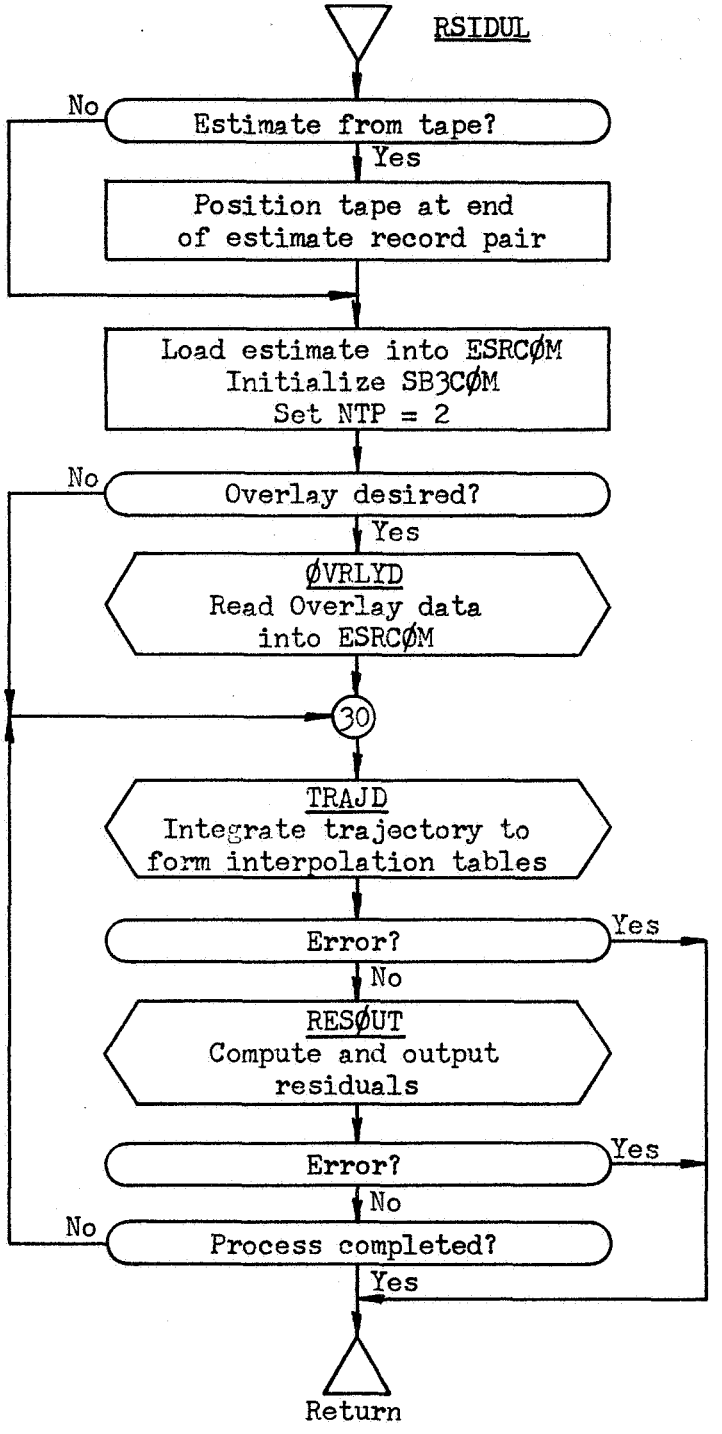
RSIDUL
No
Estimate from tape?
Yes
Position tape at end of estimate record pair
Load estimate into ESRCØM
Initialize SB3CØM
Set NTP = 2
No
Overlay desired?
Yes
ØVRLYD
Read Overlay data into ESRCØM
30
TRAJD
Integrate trajectory to form interpolation tables
Error?
Yes
No
RESØUT
Compute and output residuals
Error?
Yes
No
No
Process completed?
Yes
Return

```
$IBFTC MC133I  XR3,M94,NODD,LIST
      SUBROUTINE RSIDUL (NRSPOS)                                        RSDL0001
C     CONTROL ROUTINE FOR DCP RESIDUAL LINK                             RSDL0002
C                                                                       RSDL0003
      COMMON              /DCPCOM/CDCP(900)                             RSDL0004
      EQUIVALENCE         (CDCP(111),IERR   ) ,(CDCP(740),NPREST)       RSDL0005
     1                   ,(CDCP(758),INDSTA) ,(CDCP(732),NPROVR)       RSDL0006
     2                   ,(CDCP(757),ITRSTA)                           RSDL0007
C                                                                       RSDL0008
      COMMON              /ESTCOM/CEST(804)                             RSDL0009
      DOUBLE PRECISION     SE(14,20)                                    RSDL0010
      EQUIVALENCE         (CEST(245),SE     )                           RSDL0011
C                                                                       RSDL0012
      COMMON              /ESRCOM/CESR(304)                             RSDL0013
      DOUBLE PRECISION     CRF(2),SER(14,20)                            RSDL0014
      EQUIVALENCE         (CESR(301),CRF    ) ,(CESR(245),SER    )      RSDL0015
C                                                                       RSDL0016
      COMMON              /SB3COM/CSBF(12),RBF(6),VBF(6,8)              RSDL0017
      DOUBLE PRECISION     RBF,VBF                                      RSDL0018
C                                                                       RSDL0019
      LOGICAL              LTRAJ                                        RSDL0020
C                                                                       RSDL0021
  601 FORMAT(1H0//48X,21H*** RESIDUAL LINK ***)                         RSDL0022
  602 FORMAT(1H0//46X,26H*** EXIT RESIDUAL LINK ***)                    RSDL0023
C                                                                       RSDL0024
C     READ ESTIMATE AND OVERLAY DATA                                    RSDL0025
    1 WRITE (6,601)                                                     RSDL0026
      IF (NPREST.EQ.0) GO TO 2                                          RSDL0027
      READ  (12) SKIP                                                   RSDL0028
      NPREST = 0                                                        RSDL0029
    2 CONTINUE                                                          RSDL0030
      DO 3 I=1,244                                                      RSDL0031
    3 CESR(I) = CEST(I)                                                 RSDL0032
      DO 4 I=1,14                                                       RSDL0033
      SER(I,1) = SE(I,INDSTA)                                           RSDL0034
    4 SER(I,2) = SE(I,ITRSTA)                                           RSDL0035
      CRF(1) = 0.                                                       RSDL0036
      CRF(2) = 0.                                                       RSDL0037
      IF (NPROVR.NE.0) CALL OVRLYD(CESR)                                RSDL0038
C                                                                       RSDL0039
C     INITIALIZE STATE BUFFER                                           RSDL0040
   10 DO 11 I=1,12                                                      RSDL0041
   11 CSBF(I) = 0.                                                      RSDL0042
      LTRAJ = .FALSE.                                                   RSDL0043
C                                                                       RSDL0044
C     INTEGRATE TRAJECTORY AND OUTPUT RESIDUALS                         RSDL0045
   30 NTP = 2                                                           RSDL0046
      CALL TRAJD                                                        RSDL0047
      IF (IERR.NE.0) GO TO 900                                          RSDL0048
      CALL RESOUT (NRSPOS,LTRAJ)                                        RSDL0049
      IF (IERR.NE.0) GO TO 900                                          RSDL0050
      IF (NTP.NE.4)  GO TO 30                                           RSDL0051
C                                                                       RSDL0052
C     RETURN                                                            RSDL0053
  900 WRITE (6,602)                                                     RSDL0054
  999 RETURN                                                            RSDL0055
      END
```

Subroutine: RSPLØT

Purpose: To produce a plot of data on the system output tape. The vertical axis for the plot must be time (in seconds); any four quantities (or less) are plotted along the horizontal axis.

Calling Sequence: CALL RSPLØT (KEY)

Input and Output

I/Ø	Symbolic Name or Location	Program Dimensions	Math Symbol	Data Dimensions or Units	Definition
I	KEY				KEY > 0 to initialize a plot. = 0 to plot a time point < 0 to terminate a plot.

Common storages used: //117 cells, /PØTCØM/

Subroutines required: None.

Usage:

1. Initialization (KEY > 0)

(On a plot entry, the data to be plotted at a given time point will be in DATA(1) - DATA(4)).

DATMAX (I)	Maximum value of DATA(I) to be plotted on scale. (Off scale values will be plotted in either the far right or far left column of the graph).	
KDATA (I)	To plot DATA type (I), set KDATA (I) ≠ 0.	
LABEL (I)	First word of BCI label for DATA (I)	See example
LABEL (I+4)	Second word of BCI label for DATA (I)	
LABEL (I+8)	BCI label of units for DATA (I)	
SYMBOL (I)	BCI character used to plot DATA (I)	
DT	Time scale increment in seconds	

2. Plot Entry (KEY = 0)

TIME	Time, in seconds from initialization time, of point to be plotted.
DATA (I)	Data to be plotted at this time.
KDATA (I)	Data types to be plotted at this call. All DATA (I) will be plotted for which KDATA (I) ≠ 0.
DT	Same as above.

3. Terminate plot (KEY < 0)

DT	Same as above.

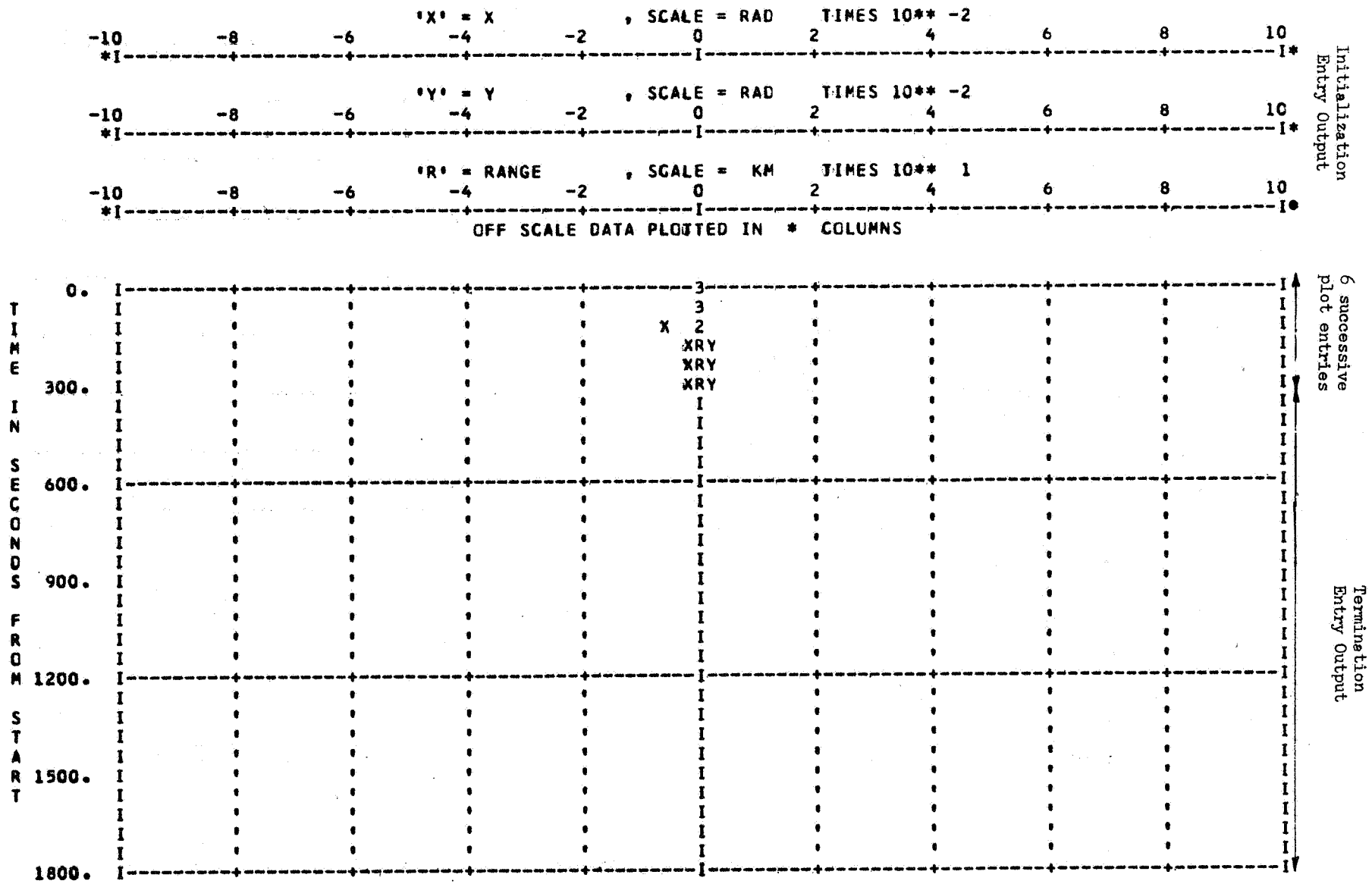

PHILCO
PHILCO-FORD CORPORATION
Space & Re-entry Systems Division

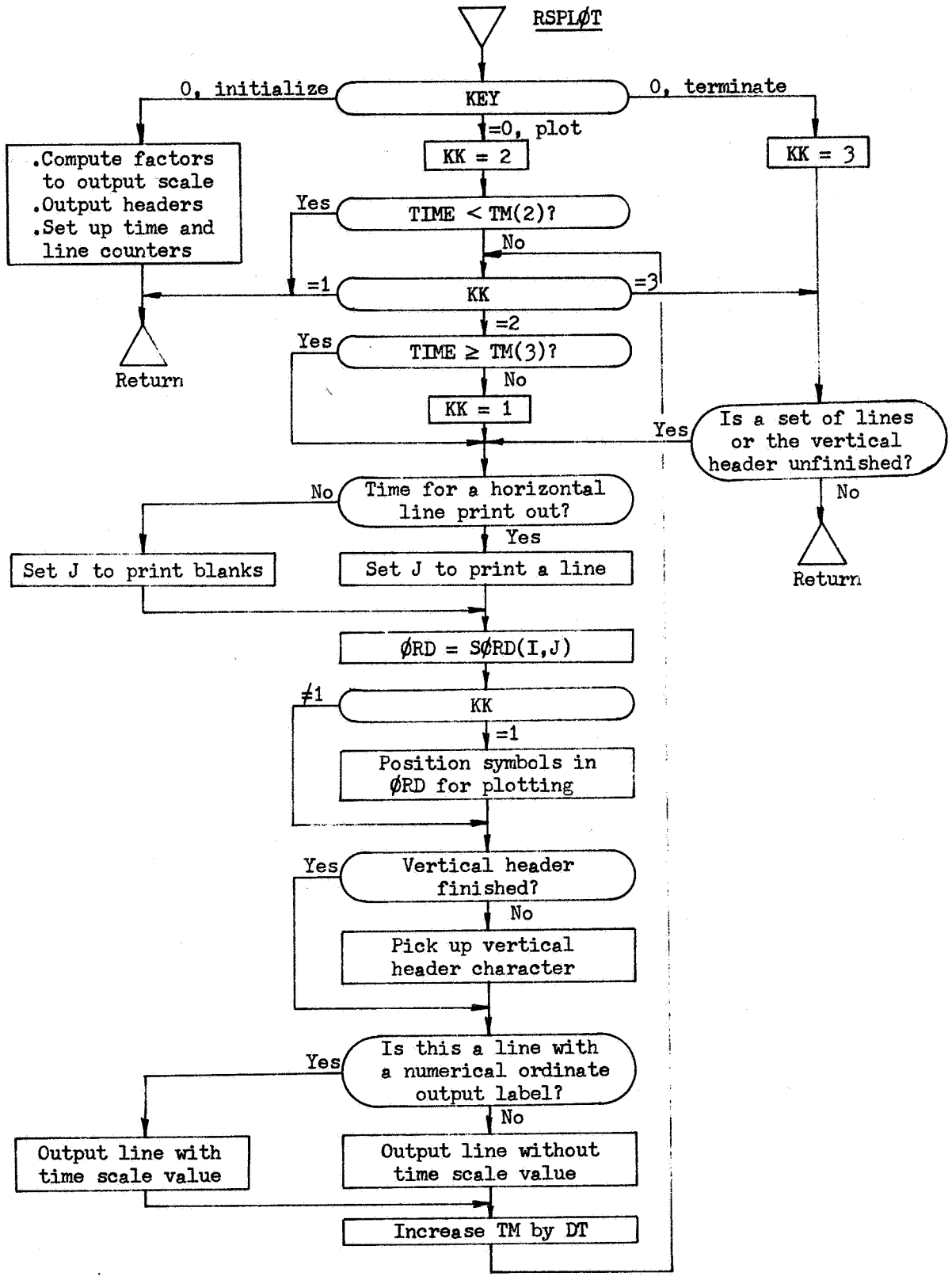
RSPLØT
KEY
0, initialize
0, terminate
=0, plot
.Compute factors to output scale
.Output headers
.Set up time and line counters
KK = 2
KK = 3
Yes
TIME < TM(2)?
No
=1
KK
=3
=2
Yes
TIME ≥ TM(3)?
No
Return
KK = 1
Yes
Is a set of lines or the vertical header unfinished?
No
Return
No
Time for a horizontal line print out?
Yes
Set J to print blanks
Set J to print a line
ØRD = SØRD(I,J)
≠1
KK
=1
Position symbols in ØRD for plotting
Yes
Vertical header finished?
No
Pick up vertical header character
Yes
Is this a line with a numerical ordinate output label?
No
Output line with time scale value
Output line without time scale value
Increase TM by DT

```
$IBFTC MC13ZT  XR3,M94,LIST,NODD
      SUBROUTINE RSPLOT (KEY)                                           PLOT0001
C     PLOTS DATA ON THE OFF-LINE PRINTER                                PLOT0002
C     (KEY .GT. 0) INITIALIZE                                           PLOT0003
C       DATMAX(I)     MAXIMUM VALUE OF DATA(I) TO BE PLOTTED ON SCALE   PLOT0004
C       KDATA(I)      INITIALIZE FOR PLOTTING DATA(I), YES=1, NO=0      PLOT0005
C       LABEL(I)      FIRST  WORD OF BCI LABEL FOR DATA(I)              PLOT0006
C       LABEL(I+4)    SECOND WORD OF BCI LABEL FOR DATA(I)              PLOT0007
C       LABEL(I+8)    BCI LABEL OF UNITS OF DATA(I)                     PLOT0008
C       SYMBOL(I)     BCI CHARACTER USED TO PLOT DATA(I)                PLOT0009
C       DT            TIME SCALE INCREMENT IN SECONDS                   PLOT0010
C     (KEY .EQ. 0) PLOT 'DATA' AT TIME'TIME'                            PLOT0011
C       TIME          TIME IN SECONDS FROM INITIALIZATION TIME          PLOT0012
C       DATA(I)       DATA TO BE PLOTTED AT TIME 'TIME'                 PLOT0013
C       KDATA(I)      DATA(I) TO BE PLOTTED THIS CALL, YES=1, NO=0      PLOT0014
C       DT            SAME AS ABOVE                                     PLOT0015
C       SYMBOL        SAME AS ABOVE                                     PLOT0016
C     (KEY .LT. 0) TERMINATE PLOT                                       PLOT0017
C       DT            SAME AS ABOVE                                     PLOT0018
C                                                                       PLOT0019
C     REMAINING /POTCOM/ CELLS ARE USED FOR STORAGE BETWEEN CALLS       PLOT0020
      COMMON /POTCOM/  TIME,DATA(4),KDATA(4),DT,DATMAX(4)               PLOT0021
     1                ,LABEL(12),SYMBOL(4)                              PLOT0022
     2                ,DORD(4),TM(3),LINE,LINE2,LINE3,LTM,N1            PLOT0023
      LOGICAL          KDATA                                            PLOT0024
      COMMON           ORD(103),TP,NORD(4),KKDATA(4),I,J,K,KK,M         PLOT0025
      LOGICAL          KKDATA                                           PLOT0026
      DIMENSION        SORD(103,2),SYMBLX(3),IORD(11)                   PLOT0027
     1                ,JORD(11)                                        PLOT0028
      EQUIVALENCE      (ORD(90),JORD)                                   PLOT0029
      DATA             SYMBLX/1H2,1H3,1H4/,ALOG5/.69897/,ASTR/1H*/      PLOT0030
      DATA IORD/-5,-4,-3,-2,-1,0,1,2,3,4,5/                             PLOT0031
      DATA SORD/1H ,1HI,9*1H-,1H+,9*1H-,1H+,9*1H-,1H+,9*1H-,1H+,9*1H-   PLOT0032
     1     ,1HI,9*1H-,1H+,9*1H-,1H+,9*1H-,1H+,9*1H-,1H+,9*1H-,1HI,1H   PLOT0033
     3     ,1H ,1HI,9*1H ,1H',9*1H ,1H',9*1H ,1H',9*1H ,1H',9*1H ,1HI   PLOT0034
     4         ,9*1H ,1H',9*1H ,1H',9*1H ,1H',9*1H ,1H',9*1H ,1HI,1H /  PLOT0035
C                                                                       PLOT0036
C                                                                       PLOT0037
C     'LTIME' IS VERTICAL AXIS LABEL ARRAY, LAST CELL MUST BE BCI BLANK PLOT0038
      DIMENSION        LTIME(28)                                        PLOT0039
      DATA LTIME /1H ,1HT,1HI,1HM,1HE,1H ,1HI,1HN,1H ,1HS,1HE,1HC,1HO   PLOT0040
     1       ,1HN,1HD,1HS,1H ,1HF,1HR,1HO,1HM,1H ,1HS,1HT,1HA,1HR,1HT   PLOT0041
     2       ,1H /                                                     PLOT0042
C                                                                       PLOT0043
  600 FORMAT(/41X,1H',A1,4H' = ,2A6,1H,,1X,8HSCALE = ,A6,11H TIMES 10** PLOT0044
     1        ,I3/6X,11(7X,I3))                                         PLOT0045
  602 FORMAT(6X,A1,1X,F5.0,1X,103A1)                                    PLOT0046
  604 FORMAT(6X,A1,7X,103A1)                                            PLOT0047
  606 FORMAT(46X,37HOFF SCALE DATA PLOTTED IN  *  COLUMNS/1H0)          PLOT0048
C                                                                       PLOT0049
      IF( KEY ) 90,50,1                                                 PLOT0050
C     INITIALIZE,  KEY=1                                                PLOT0051
    1 CONTINUE                                                          PLOT0052
      DO 4 M=1,4                                                        PLOT0053
      IF( .NOT.KDATA(M) ) GO TO 4                                       PLOT0054
      TP = ( ALOG10( ABS(DATMAX(M)) )-0.0000001 ) - 50.0                PLOT0055
      K = IFIX(TP)+49                                                   PLOT0056
      IF( K.EQ.0 ) K=0                                                  PLOT0057
      J = 1                                                             PLOT0058
      TP = AMOD(TP+130.,1.)                                             PLOT0059
      IF( TP.GT.ALOG5 .OR. TP.LE.1.E-5 )  J=2                           PLOT0060
      DORD(M) = FLOAT(J) * 10.**(K-1)                                   PLOT0061
      DO 2 I=1,11                                                       PLOT0062
    2 JORD(I) = IORD(I)*J                                               PLOT0063
      WRITE(6,600) SYMBOL(M),LABEL(M),LABEL(M+4),LABEL(M+8),K           PLOT0064
     1             ,(JORD(I),I=1,11)                                    PLOT0065
      WRITE(6,604)  LTIME(28),ASTR,(SORD(I,1),I=2,102),ASTR             PLOT0066
    4 CONTINUE                                                          PLOT0067
      WRITE(6,606)                                                      PLOT0068
      TM(1) = 0.                                                        PLOT0069
      TM(3) = DT/2.                                                     PLOT0070
      TM(2) = -TM(3)                                                    PLOT0071
      ASSIGN 72 TO N1                                                   PLOT0072
      LINE = 10000                                                      PLOT0073
      LINE2 = 10000                                                     PLOT0074
```

```
      LINE3 = 0                                                         PLOT0075
      GO TO 99                                                          PLOT0076
C     PLOT,  KEY=0                                                      PLOT0077
   50 CONTINUE                                                          PLOT0078
      IF( TIME .LT. TM(2) ) GO TO 99                                    PLOT0079
   51 KK=1                                                              PLOT0080
      IF( TIME .GE. TM(3) ) KK=2                                        PLOT0081
C                                                                       PLOT0082
C       SET FOR NUMBER OF LINES PER HORIZONAL LINE PRINT                PLOT0083
C                    V                                                  PLOT0084
   52 IF(  LINE.GE.10 ) GO TO 54                                        PLOT0085
      LINE = LINE+1                                                     PLOT0086
      J = 2                                                             PLOT0087
      GO TO 56                                                          PLOT0088
   54 LINE = 1                                                          PLOT0089
      J = 1                                                             PLOT0090
   56 CONTINUE                                                          PLOT0091
      DO 58 I=1,103                                                     PLOT0092
   58 ORD(I) = SORD(I,J)                                                PLOT0093
      GO TO (60,70,70), KK                                              PLOT0094
   60 CONTINUE                                                          PLOT0095
      DO 62 M=1,4                                                       PLOT0096
      KKDATA(M) = KDATA(M)                                              PLOT0097
      IF( .NOT.KKDATA(M) ) GO TO 62                                     PLOT0098
      K = IFIX( DATA(M)/DORD(M) + SIGN( 0.5,DATA(M) )  ) + 52           PLOT0099
      K = MAX0(K,1)                                                     PLOT0100
      K = MIN0(K,103)                                                   PLOT0101
      NORD(M) = K                                                       PLOT0102
   62 CONTINUE                                                          PLOT0103
      DO 68 M=1,4                                                       PLOT0104
      IF( .NOT.KKDATA(M) ) GO TO 68                                     PLOT0105
      J = NORD(M)                                                       PLOT0106
      ORD(J) = SYMBOL(M)                                                PLOT0107
      K = 0                                                             PLOT0108
      I = M                                                             PLOT0109
   64 IF( I.GE.4 ) GO TO 68                                             PLOT0110
      IF( J.NE.NORD(I+1) .OR. .NOT.KKDATA(I+1) ) GO TO 66               PLOT0111
      K = K+1                                                           PLOT0112
      ORD(J) = SYMBLX(K)                                                PLOT0113
      KKDATA(I+1) = .FALSE.                                             PLOT0114
   66 I=I+1                                                             PLOT0115
      GO TO 64                                                          PLOT0116
   68 CONTINUE                                                          PLOT0117
   70 CONTINUE                                                          PLOT0118
      GO TO N1, (72,74)                                                 PLOT0119
   72 LINE3 = LINE3+1                                                   PLOT0120
      LTM = LTIME(LINE3)                                                PLOT0121
C                                                                       PLOT0122
C       SET FOR NUMBER OF CELLS IN LTIME                                PLOT0123
C                    V                                                  PLOT0124
      IF( LINE3.NE.28 ) GO TO 74                                        PLOT0125
      ASSIGN 74 TO N1                                                   PLOT0126
      LINE3 = 0                                                         PLOT0127
   74 CONTINUE                                                          PLOT0128
C                                                                       PLOT0129
C       SET FOR NUMBER OF LINES PER TIME LABEL PRINT                    PLOT0130
C                    V                                                  PLOT0131
      IF( LINE2.GE. 5 ) GO TO 76                                        PLOT0132
      LINE2 = LINE2+1                                                   PLOT0133
      WRITE(6,604) LTM,ORD                                              PLOT0134
      GO TO 78                                                          PLOT0135
   76 LINE2 = 1                                                         PLOT0136
      WRITE(6,602) LTM,TM(1),ORD                                        PLOT0137
   78 CONTINUE                                                          PLOT0138
      DO 82 I=1,3                                                       PLOT0139
   82 TM(I) = TM(I) + DT                                                PLOT0140
      GO TO (99,51,92), KK                                              PLOT0141
C     TERMINATE PLOT,  KEY=-1                                           PLOT0142
   90 CONTINUE                                                          PLOT0143
      KK = 3                                                            PLOT0144
   92 IF( LINE.NE.1  .OR.  LINE3.NE.0 ) GO TO 52                        PLOT0145
   99 RETURN                                                            PLOT0146
      END
```

Subroutine: SBDAT

Purpose: Computes four Unified S-Band measurements (X, Y, range, doppler).

Calling Sequence: CALL SBDAT

Common storages used: /DATCØM/

Subroutines required: DCRØSS,DDØT,DMVTRN,DNØRM

COMMON LOCATIONS

Common	Location	Name	Dimension	Description
DATCØM	C(1)	BIAS	d(2)	BIAS(1) Doppler bias frequency (cps). BIAS(2) Transponder retransmission ratio.
	C(133)	FTR	d	Doppler transmitter frequency (cps).
	C(135)	OMEGA	d	Earth rotation rate (rad/sec).
	C(137)	SPDLT	d	Speed of light (km/sec).
	C(139)	STA	d(10)	STA(1-3) Receiving station position in B-frame (km). STA(4-5) Refraction constants. STA(6-10) As above, but for transmitting station if three-way doppler.
	C(159)	TAU	d	Doppler count interval (sec).
	C(161)	TB2CØ	d(18)	TB2CØ(1-9) B-frame to C-frame transform at end of doppler count interval at signal reception. TB2CØ(10-18) Same as above, but at beginning of doppler count interval.
	C(197)	TB2CT	d(18)	Same as TB2CØ, but at time of signal transmission.
	C(233)	TT2BØ	d(9)	Unit North, East, Down vectors at receiving station in B-frame.
	C(251)	TT2BT	d(9)	Same as TT2BØ, but for transmitting station if doppler is three-way.
	C(269)	XV	d(12)	XV(1-6) Spacecraft position and velocity in C-frame at end of doppler count interval as signal leaves spacecraft (km, km/sec). XV(7-12) As above, but at beginning of doppler count interval.
	C(294)	MØDE		Doppler mode = 2, two-way = 3, three-way
	C(297)	NALIGN		Antenna principal axis alignment +1, North +2, East
	C(298)	NANG		Angle inclusion option*.
	C(299)	NFRAC		Refraction correction option*. *+1, include option. +2, omit option.
	C(5)	ØBS	d(64)	Measurements. See Table 1, description of CBDAT.

```
$IBFTC MC13BN  M94,NODD,XR3
CMC13BN   S-BAND MEASUREMENTS                                          SBDT0001
      SUBROUTINE SBDAT                                                 SBDT0002
      COMMON  /DATCOM/  BIAS(2),     OBS(64),     FTR,         OMEGA   SBDT0003
     1,                 SPDLT,       STA(10),     TAU,         TB2CO(18) SBDT0004
     2,                 TB2CT(18),   TT2BO(9),    TT2BT(9),    XV(12)  SBDT0005
     3,                 MLT,         MODE,        MSTA,        MTIM    SBDT0006
     4,                 NALIGN,      NANG,        NFRAC                SBDT0007
      DOUBLE PRECISION  CROB(3),     DCXSOB(3),   DCXSTR(3),   DELTE(2) SBDT0008
     1,                 DNOB(3),     DNTR(3),     DRDT(2),     DUM1(3) SBDT0009
     2,                 DUM2(3),     E(2),        EAOB(3),     EATR(3) SBDT0010
     3,                 EDOT(2),     ENOB(3),     ENTR(3),     OMG(3)  SBDT0011
     4,                 RM(2),       RTMG(2),     RTOB(6),     RTOBX(6) SBDT0012
     5,                 RTTR(6),     RTTRX(6),    SXOB(3),     SXTR(3) SBDT0013
     6,                 TT2CO(9),    TT2CT(9),    XSOB(6),     XSOBX(6) SBDT0014
     7,                 XSTR(6),     XSTRX(6),    Z1(6)                SBDT0015
      DOUBLE PRECISION  BIAS,      CE,        CONST,     CX,        CY  SBDT0016
     1,                 OBS,       DDOT,      DEN1,      DEN2,      DNORM SBDT0017
     2,                 F,         FTR,       OMEGA,     RATOB,     RATOBX SBDT0018
     3,                 RATTR,     RATTRX,    RSPLT,     R2OB,      R2TR SBDT0019
     4,                 SA,        SB,        SE,        SPDLT,     STA  SBDT0020
     5,                 SX,        SY,        T,         TAU,       TB2CO SBDT0021
     6,                 TB2CT,     TT2BO,     TT2BT,     XTDOB,     XTDTR SBDT0022
     7,                 XTEOB,     XTETR,     XTNOB,     XTNTR,     XV   SBDT0023
C                                                                      SBDT0024
C     DECLARE LIBRARY FUNCTIONS DOUBLE PRECISION TO SATISFY UNIVAC     SBDT0025
      DOUBLE PRECISION          DATAN,DCOS,DSIN,DSQRT                  SBDT0026
C                                                                      SBDT0027
      EQUIVALENCE  (TT2CO(1),ENOB),  (TT2CO(4),EAOB),  (TT2CO(7),DNOB) SBDT0028
     1,            (TT2CT(1),ENTR),  (TT2CT(4),EATR),  (TT2CT(7),DNTR) SBDT0029
     2,            (SXOB(1),XTNOB),  (SXOB(2),XTEOB),  (SXOB(3),XTDOB) SBDT0030
     3,            (SXTR(1),XTNTR),  (SXTR(2),XTETR),  (SXTR(3),XTDTR) SBDT0031
     4,            (RM(1),RATOB),    (RM(2),RATTR)                    SBDT0032
      IF(MODE.EQ.3) GO TO 9                                            SBDT0033
      DO 1 I=1,5                                                       SBDT0034
    1 STA(I+5)=STA(I)                                                  SBDT0035
      DO 2 I=1,9                                                       SBDT0036
    2 TT2BT(I)=TT2BO(I)                                                SBDT0037
    9 RSPLT=1.D0/SPDLT                                                 SBDT0038
C     N,E,D VECTORS IN C FRAME AT RECEIVING AND TRANSMITTING TIMES     SBDT0039
      CALL DMVTRN(TB2CO,TT2BO,TT2CO,1,3)                               SBDT0040
      CALL DMVTRN(TB2CT,TT2BT,TT2CT,1,3)                               SBDT0041
C     STATION VECTORS AT START AND END OF DOPPLER INTERVAL             SBDT0042
      CALL DMVTRN(TB2CO,STA,RTOB,1,1)                                  SBDT0043
      CALL DMVTRN(TB2CO(10),STA,RTOBX,1,1)                             SBDT0044
      CALL DMVTRN(TB2CT,STA(6),RTTR,1,1)                               SBDT0045
      CALL DMVTRN(TB2CT(10),STA(6),RTTRX,1,1)                          SBDT0046
      DO 10 I=1,3                                                      SBDT0047
   10 OMG(I)=TB2CO(I+6)*OMEGA                                          SBDT0048
      CALL DCROSS(OMG,RTOB,RTOB(4))                                    SBDT0049
      CALL DCROSS(OMG,RTTR,RTTR(4))                                    SBDT0050
      CALL DCROSS(OMG,RTOBX,RTOBX(4))                                  SBDT0051
      CALL DCROSS(OMG,RTTRX,RTTRX(4))                                  SBDT0052
C     RANGE AND RANGE-RATE VECTORS AND MAGNITUDES                      SBDT0053
      DO 20 I=1,6                                                      SBDT0054
      XSOB(I)=XV(I)-RTOB(I)                                            SBDT0055
      XSTR(I)=XV(I)-RTTR(I)                                            SBDT0056
      XSOBX(I)=XV(I+6)-RTOBX(I)                                        SBDT0057
   20 XSTRX(I)=XV(I+6)-RTTRX(I)                                        SBDT0058
      R2OB=DDOT(XSOB,XSOB)                                             SBDT0059
      R2TR=DDOT(XSTR,XSTR)                                             SBDT0060
      RATOB=DSQRT(R2OB)                                                SBDT0061
      RATTR=DSQRT(R2TR)                                                SBDT0062
      RATOBX=DNORM(XSOBX)                                              SBDT0063
      RATTRX=DNORM(XSTRX)                                              SBDT0064
C     RANGE VECTORS IN TOPOCENTRIC COORDINATES                         SBDT0065
      CALL DMVTRN(TT2CO,XSOB,SXOB,2,1)                                 SBDT0066
      CALL DMVTRN(TT2CT,XSTR,SXTR,2,1)                                 SBDT0067
C     MAGNITUDE OF STATION VECTOR                                      SBDT0068
      RTMG(1)=DNORM(RTOB)                                              SBDT0069
      RTMG(2)=DNORM(RTTR)                                              SBDT0070
      GO TO (30,60),NANG                                               SBDT0071
C     X AND Y ANGLES                                                   SBDT0072
   30 GO TO (40,50),NALIGN                                             SBDT0073
C     PRINCIPAL AXIS NORTH                                             SBDT0074
```

```
   40 CALL DCROSS(ENOB,XSOB,CROB)                                       SBDT0075
      OBS(1)=DATAN2(XTEOB,-XTDOB)                                       SBDT0076
      OBS(17)=DATAN(XTNOB/DNORM(CROB))                                  SBDT0077
      GO TO 60                                                          SBDT0078
C     PRINCIPAL AXIS EAST                                               SBDT0079
   50 CALL DCROSS(EAOB,XSOB,CROB)                                       SBDT0080
      OBS(1)=DATAN2(-XTNOB,-XTDOB)                                      SBDT0081
      OBS(17)=DATAN(XTEOB/DNORM(CROB))                                  SBDT0082
C     RANGING OBSERVABLE (TOTAL PATH LENGTH IN KM)                      SBDT0083
   60 OBS(33)=(RATOB+RATTR)                                             SBDT0084
C     DIFFERENCED DOPPLER OBSERVABLE                                    SBDT0085
      CONST=BIAS(2)*FTR*RSPLT                                           SBDT0086
      OBS(49)=BIAS(1)*TAU+CONST*(OBS(33)-RATOBX-RATTRX)                 SBDT0087
      GO TO (70,160),NFRAC                                              SBDT0088
C     REFRACTION CORRECTIONS                                            SBDT0089
C     FIRST, ELEVATIONS AND ELEVATION CORRECTIONS                       SBDT0090
   70 E(1)=DATAN(-XTDOB/DSQRT(XTNOB*XTNOB+XTEOB*XTEOB))                 SBDT0091
      E(2)=DATAN(-XTDTR/DSQRT(XTNTR*XTNTR+XTETR*XTETR))                 SBDT0092
      DO 110 I=1,2                                                      SBDT0093
      DELTE(I)=0.                                                       SBDT0094
      IF(E(I).LT..01) GO TO 110                                         SBDT0095
      SE=DSIN(E(I))                                                     SBDT0096
      CE=DCOS(E(I))                                                     SBDT0097
      IF(E(I).GE..17453293D0) GO TO 100                                 SBDT0098
      T=(1.03585796D0-(.01072014D0-(.1279119D-7-.1227363D-7/E(I))/E(I))/SBDT0099
     1E(I))*STA(5*I-1)*CE/SE                                            SBDT0100
   80 F=RTMG(I)/RM(I)                                                   SBDT0101
   90 DELTE(I)=T-F*((STA(5*I-1)+T*T/2.)*CE-T*SE)                        SBDT0102
      GO TO 110                                                         SBDT0103
  100 DELTE(I)=STA(5*I-1)*CE/SE                                         SBDT0104
  110 CONTINUE                                                          SBDT0105
      GO TO (120,130),NANG                                              SBDT0106
C     ANGLE CORRECTIONS                                                 SBDT0107
  120 SX=DSIN(OBS(1))                                                   SBDT0108
      CX=DCOS(OBS(1))                                                   SBDT0109
      SY=DSIN(OBS(17))                                                  SBDT0110
      CY=DCOS(OBS(17))                                                  SBDT0111
      DEN1=DSQRT(1.D0-CX*CX*CY*CY)                                      SBDT0112
      OBS(1)=OBS(1)-SX*DELTE(1)/(CY*DEN1)                               SBDT0113
      OBS(17)=OBS(17)-CX*SY*DELTE(1)/DEN1                               SBDT0114
C     RANGING OBSERVABLE CORRECTION                                     SBDT0115
  130 OBS(33)=OBS(33)+(STA(4)/(DSIN(E(1)+DELTE(1))*STA(5))+STA(9)/(DSIN(SBDT0116
     1E(2)+DELTE(2))*STA(10)))*1.D-3                                    SBDT0117
C     DOPPLER CORRECTION                                                SBDT0118
C     FIRST, ELEVATION TIME DERIVATIVES                                 SBDT0119
      CALL DCROSS(DNOB,XSOB,DCXSOB)                                     SBDT0120
      CALL DCROSS(DNTR,XSTR,DCXSTR)                                     SBDT0121
      CALL DCROSS(DCXSOB,XSOB,DUM1)                                     SBDT0122
      CALL DCROSS(DCXSTR,XSTR,DUM2)                                     SBDT0123
      CALL DCROSS(XSOB,OMG,Z1)                                          SBDT0124
      CALL DCROSS(XSTR,OMG,Z1(4))                                       SBDT0125
      DEN1=R2OB*DNORM(DCXSOB)                                           SBDT0126
      DEN2=R2TR*DNORM(DCXSTR)                                           SBDT0127
      DO 140 I=1,3                                                      SBDT0128
      DUM1(I)=DUM1(I)/DEN1                                              SBDT0129
      DUM2(I)=DUM2(I)/DEN2                                              SBDT0130
      Z1(I)=Z1(I)+XSOB(I+3)                                             SBDT0131
  140 Z1(I+3)=Z1(I+3)+XSTR(I+3)                                         SBDT0132
      EDOT(1)=DDOT(DUM1,Z1)                                             SBDT0133
      EDOT(2)=DDOT(DUM2,Z1(4))                                          SBDT0134
      DO 150 I=1,2                                                      SBDT0135
      SA=DSIN(E(I)+DELTE(I))                                            SBDT0136
      SB=DSIN(E(I)+DELTE(I)-EDOT(I)*TAU)                                SBDT0137
  150 DRDT(I)=STA(5*I-1)/STA(5*I)*(1.D0/SA-1.D0/SB)                     SBDT0138
      OBS(49)=OBS(49)+CONST*(DRDT(1)+DRDT(2))*1.D-3                     SBDT0139
  160 CONTINUE                                                          SBDT0140
      IF(OBS(1).LT.0.D0) OBS(1)=OBS(1)+6.2831853071795864               SBDT0141
      IF(OBS(17).LT.0.D0) OBS(17)=OBS(17)+6.2831853071795864            SBDT0142
      RETURN                                                            SBDT0143
      END
```

Subroutine: SBDATP

Purpose: Computes four Unified S-Band measurements and their partials.

Calling Sequence: CALL SBDATP(R2)

Input and Output

I/Ø	Symbolic Name or Location	Program Dimensions	Math Symbol	Data Dimensions or Units	Definition
Ø	R2	d	s^2	km^2	Slant range squared.

Common storages used: /DATCØM/

Subroutines required: DCRØSS,DDØT,DMVTRN,DNØRM

COMMON LOCATIONS

Common	Location	Name	Dimension	Description
DATCØM	C(1)	BIAS	d(2)	BIAS(1), Doppler bias frequency (cps) BIAS(2), Transponder retransmission ratio.
	C(133)	FTR	d	Doppler transmitter frequency (cps).
	C(135)	ØMEGA	d	Earth rotation rate (rad/sec).
	C(137)	SPDLT	d	Speed of light (km/sec).
	C(139)	STA	d(10)	STA(1-3) Receiving station postion in B-frame (km). STA(4-5) Refraction costants. STA(6-10) As above, but for transmitting station if three-way doppler
	C(159)	TAU	d	Doppler count interval (sec).
	C(161)	TB2CØ	d(18)	TB2CØ(1-9), B-frame to C-frame transform at end of doppler count interval at signal reception. TB2CØ(10-18) As above, but at beginning of doppler count interval.
	C(197)	TB2CT	d(18)	Same as TB2CØ, but at time of signal transmission.
	C(233)	TT2BØ	d(9)	Unit North, East, Down vectors in B-frame at receiving station.
	C(251)	TT2BT	d(9)	Same as TT2BØ, but for transmitting station if three-way doppler.
	C(269)	XV	d(12)	XV(1-6), Spacecraft position and velocity at end of doppler count interval as signal leaves spacecraft. XV(7-12), Same as above, but at beginning of count interval (km,km/sec).
	C(293)	MLT		Speed of light partial option key*.
	C(294)	MØDE		Doppler mode +2, two-way +3, three-way
	C(295)	MSTA		Station position partial option key*.
	C(296)	MTIM		Station clock partial option key*.
	C(297)	NALIGN		Antenna principal axis alignment +1, North +2, East

COMMON LOCATIONS

Common	Location	Name	Dimension	Description
	C(298)	NANG		Angle inclusion option key*.
	C(299)	NFRAC		Refraction effects option key*. *+1, include +2, omit If angles are omitted, no angle partials are computed.
	C(5)	ØBS	d(64)	Measurements and partials. See Table 1, description of CBDAT.

```
$IBFTC MC13BL  XR3,M94,NODD,LIST
CmC13BL   UNIFIED S-BAND MEASUREMENTS AND PARTIALS                      SBDP0001
      SUBROUTINE SBDATP(R2OB)                                           SBDP0002
      COMMON  /DATCOM/  BIAS(2),     OBS(64),     FTR,         OMEGA    SBDP0003
     1,                 SPDLT,       STA(10),     TAU,         TB2CO(18) SBDP0004
     2,                 TB2CT(18),   TT2BO(9),    TT2BT(9),    XV(12)   SBDP0005
     3,                 MLT,         MODE,        MSTA,        MTIM     SBDP0006
     4,                 NALIGN,      NANG,        NFRAC                 SBDP0007
      DOUBLE PRECISION  CROB(3),     DCXSOB(3),   DCXSTR(3),   DELTE(2) SBDP0008
     1,                 DNOB(3),     DNTR(3),     DRDT(2),     DUM1(3)  SBDP0009
     2,                 DUM2(3),     E(2),        EAOB(3),     EATR(3)  SBDP0010
     3,                 EDOT(2),     ENOB(3),     ENTR(3),     OMG(3)   SBDP0011
     4,                 RM(2),       RTMG(2),     RTOB(6),     RTOBX(6) SBDP0012
     5,                 RTTR(6),     RTTRX(6),    SXOB(3),     SXTR(3)  SBDP0013
     6,                 TT2CO(9),    TT2CT(9),    XSOB(6),     XSOBX(6) SBDP0014
     7,                 XSTR(6),     XSTRX(6),    Z1(6)                 SBDP0015
      DOUBLE PRECISION  BIAS,      CE,        CONST,     CX,        CY  SBDP0016
     1,                 OBS,       DDOT,      DEN1,      DEN2,      DNORM SBDP0017
     2,                 F,         FTR,       OMEGA,     RATOB,     RATOBX SBDP0018
     3,                 RATTR,     RATTRX,    RDOT,      RSPLT,     RSPLT2 SBDP0019
     4,                 R2OB,      R2TR,      SA,        SB,        SE  SBDP0020
     5,                 SPDLT,     STA,       SX,        SY,        S1  SBDP0021
     6,                 S2,        T,         TAU,       TB2CO,     TB2CT SBDP0022
     7,                 TT2BO,     TT2BT,     XTDOB,     XTDTR,     XTEOB SBDP0023
     8,                 XTETR,     XTNOB,     XTNTR,     XV                SBDP0024
C                                                                       SBDP0025
C     DECLARE LIBRARY FUNCTIONS DOUBLE PRECISION TO SATISFY UNIVAC      SBDP0026
      DOUBLE PRECISION          DATAN,DCOS,DSIN,DSQRT                   SBDP0027
C                                                                       SBDP0028
      EQUIVALENCE  (TT2CO(1),ENOB),  (TT2CO(4),EAOB),  (TT2CO(7),DNOB)  SBDP0029
     1,            (TT2CT(1),ENTR),  (TT2CT(4),EATR),  (TT2CT(7),DNTR) SBDP0030
     2,            (SXOB(1),XTNOB),  (SXOB(2),XTEOB),  (SXOB(3),XTDOB) SBDP0031
     3,            (SXTR(1),XTNTR),  (SXTR(2),XTETR),  (SXTR(3),XTDTR) SBDP0032
     4,            (RM(1),RATOB),    (RM(2),RATTR)                     SBDP0033
      IF(MODE.EQ.3) GO TO 9                                             SBDP0034
      DO 1 I=1,5                                                        SBDP0035
    1 STA(I+5)=STA(I)                                                   SBDP0036
      DO 2 I=1,9                                                        SBDP0037
    2 TT2BT(I)=TT2BO(I)                                                 SBDP0038
    9 RSPLT=1.D0/SPDLT                                                  SBDP0039
      RSPLT2=RSPLT*RSPLT                                                SBDP0040
C     N,E,D VECTORS IN C FRAME AT RECEIVING AND TRANSMITTING TIMES      SBDP0041
      CALL DMVTRN(TB2CO,TT2BO,TT2CO,1,3)                                SBDP0042
      CALL DMVTRN(TB2CT,TT2BT,TT2CT,1,3)                                SBDP0043
C     STATION VECTORS AT START AND END OF DOPPLER INTERVAL              SBDP0044
      CALL DMVTRN(TB2CO,STA,RTOB,1,1)                                   SBDP0045
      CALL DMVTRN(TB2CO(10),STA,RTOBX,1,1)                              SBDP0046
      CALL DMVTRN(TB2CT,STA(6),RTTR,1,1)                                SBDP0047
      CALL DMVTRN(TB2CT(10),STA(6),RTTRX,1,1)                           SBDP0048
      DO 10 I=1,3                                                       SBDP0049
   10 OMG(I)=TB2CO(I+6)*OMEGA                                           SBDP0050
      CALL DCROSS(OMG,RTOB,RTOB(4))                                     SBDP0051
      CALL DCROSS(OMG,RTTR,RTTR(4))                                     SBDP0052
      CALL DCROSS(OMG,RTOBX,RTOBX(4))                                   SBDP0053
      CALL DCROSS(OMG,RTTRX,RTTRX(4))                                   SBDP0054
C     RANGE AND RANGE-RATE VECTORS AND MAGNITUDES                       SBDP0055
      DO 20 I=1,6                                                       SBDP0056
      XSOB(I)=XV(I)-RTOB(I)                                             SBDP0057
      XSTR(I)=XV(I)-RTTR(I)                                             SBDP0058
      XSOBX(I)=XV(I+6)-RTOBX(I)                                         SBDP0059
   20 XSTRX(I)=XV(I+6)-RTTRX(I)                                         SBDP0060
      R2OB=DDOT(XSOB,XSOB)                                              SBDP0061
      R2TR=DDOT(XSTR,XSTR)                                              SBDP0062
      RATOB=DSQRT(R2OB)                                                 SBDP0063
      RATTR=DSQRT(R2TR)                                                 SBDP0064
      RATOBX=DNORM(XSOBX)                                               SBDP0065
      RATTRX=DNORM(XSTRX)                                               SBDP0066
C     RANGE VECTORS IN TOPOCENTRIC COORDINATES                          SBDP0067
      CALL DMVTRN(TT2CO,XSOB,SXOB,2,1)                                  SBDP0068
      CALL DMVTRN(TT2CT,XSTR,SXTR,2,1)                                  SBDP0069
C     MAGNITUDE OF STATION VECTOR                                       SBDP0070
      RTMG(1)=DNORM(RTOB)                                               SBDP0071
      RTMG(2)=DNORM(RTTR)                                               SBDP0072
      GO TO (30,90),NANG                                                SBDP0073
C     X AND Y ANGLES                                                    SBDP0074
```

```
   30 GO TO (40,50),NALIGN                                          SBDP0075
C     PRINCIPAL AXIS NORTH                                          SBDP0076
   40 CALL DCROSS(ENOB,XSOB,CROB)                                   SBDP0077
      GO TO 60                                                      SBDP0078
C     PRINCIPAL AXIS EAST                                           SBDP0079
   50 CALL DCROSS(EAOB,XSOB,CROB)                                   SBDP0080
   60 S2=DDOT(CROB,CROB)                                            SBDP0081
      S1=DSQRT(S2)                                                  SBDP0082
      GO TO (70,80),NALIGN                                          SBDP0083
   70 OBS(1)=DATAN2(XTEOB,-XTDOB)                                   SBDP0084
      OBS(17)=DATAN(XTNOB/S1)                                       SBDP0085
      GO TO 90                                                      SBDP0086
   80 OBS(1)=DATAN2(-XTNOB,-XTDOB)                                  SBDP0087
      OBS(17)=DATAN(XTEOB/S1)                                       SBDP0088
C     RANGING OBSERVABLE (TOTAL PATH LENGTH IN KM)                  SBDP0089
   90 OBS(33)=RATOB+RATTR                                           SBDP0090
C     DIFFERENCED DOPPLER OBSERVABLE                                SBDP0091
      CONST=BIAS(2)*FTR*RSPLT                                       SBDP0092
      OBS(49)=BIAS(1)*TAU+CONST*(OBS(33)-RATOBX-RATTRX)             SBDP0093
C     ANGLE-RATE OPERATOR (ANY ANGLE)                               SBDP0094
      CALL DCROSS(XSOB,OMG,Z1)                                      SBDP0095
      CALL DCROSS(XSTR,OMG,Z1(4))                                   SBDP0096
      DO 100 I=1,3                                                  SBDP0097
      Z1(I)=Z1(I)+XSOB(I+3)                                         SBDP0098
  100 Z1(I+3)=Z1(I+3)+XSTR(I+3)                                     SBDP0099
      GO TO (110,200),NFRAC                                         SBDP0100
C     REFRACTION CORRECTIONS                                        SBDP0101
C     FIRST, ELEVATIONS AND ELEVATION CORRECTIONS                   SBDP0102
  110 E(1)=DATAN(-XTDOB/DSQRT(XTNOB*XTNOB+XTEOB*XTEOB))             SBDP0103
      E(2)=DATAN(-XTDTR/DSQRT(XTNTR*XTNTR+XTETR*XTETR))             SBDP0104
      DO 150 I=1,2                                                  SBDP0105
      DELTE(I)=0.                                                   SBDP0106
      IF(E(I).LT..01) GO TO 150                                     SBDP0107
      SE=DSIN(E(I))                                                 SBDP0108
      CE=DCOS(E(I))                                                 SBDP0109
      IF(E(I).GE..17453293D0) GO TO 140                             SBDP0110
      T=(1.03585796D0-(.01072014D0-(.1279119D-7-.1227363D-7/E(I))/E(I))/SBDP0111
     1E(I))*STA(5*I-1)*CE/SE                                        SBDP0112
  120 F=RTMG(I)/RM(I)                                               SBDP0113
  130 DELTE(I)=T-F*((STA(5*I-1)+T*T/2.)*CE-T*SE)                    SBDP0114
      GO TO 150                                                     SBDP0115
  140 DELTE(I)=STA(5*I-1)*CE/SE                                     SBDP0116
  150 CONTINUE                                                      SBDP0117
      GO TO (160,170),NANG                                          SBDP0118
C     ANGLE CORRECTIONS                                             SBDP0119
  160 SX=DSIN(OBS(1))                                               SBDP0120
      CX=DCOS(OBS(1))                                               SBDP0121
      SY=DSIN(OBS(17))                                              SBDP0122
      CY=DCOS(OBS(17))                                              SBDP0123
      DEN1=DSQRT(1.D0-CX*CX*CY*CY)                                  SBDP0124
      OBS(1)=OBS(1)-SX*DELTE(1)/(CY*DEN1)                           SBDP0125
      OBS(17)=OBS(17)-CX*SY*DELTE(1)/DEN1                           SBDP0126
C     RANGING OBSERVABLE CORRECTION                                 SBDP0127
  170 OBS(33)=OBS(33)+(STA(4)/(DSIN(E(1)+DELTE(1))*STA(5))+STA(9)/(DSIN(SBDP0128
     1E(2)+DELTE(2))*STA(10)))*1.D-3                                SBDP0129
C     DOPPLER CORRECTION                                            SBDP0130
C     FIRST, ELEVATION TIME DERIVATIVES                             SBDP0131
      CALL DCROSS(DNOB,XSOB,DCXSOB)                                 SBDP0132
      CALL DCROSS(DNTR,XSTR,DCXSTR)                                 SBDP0133
      CALL DCROSS(DCXSOB,XSOB,DUM1)                                 SBDP0134
      CALL DCROSS(DCXSTR,XSTR,DUM2)                                 SBDP0135
      DEN1=R2OB*DNORM(DCXSOB)                                       SBDP0136
      DEN2=R2TR*DNORM(DCXSTR)                                       SBDP0137
      DO 180 I=1,3                                                  SBDP0138
      DUM1(I)=DUM1(I)/DEN1                                          SBDP0139
  180 DUM2(I)=DUM2(I)/DEN2                                          SBDP0140
      EDOT(1)=DDOT(DUM1,Z1)                                         SBDP0141
      EDOT(2)=DDOT(DUM2,Z1(4))                                      SBDP0142
      DO 190 I=1,2                                                  SBDP0143
      SA=DSIN(E(I)+DELTE(I))                                        SBDP0144
      SB=DSIN(E(I)+DELTE(I)-EDOT(I)*TAU)                            SBDP0145
  190 DRDT(I)=STA(5*I-1)/STA(5*I)*(1.D0/SA-1.D0/SB)                 SBDP0146
      OBS(49)=OBS(49)+CONST*(DRDT(1)+DRDT(2))*1.D-3                 SBDP0147
C     PARTIAL DERIVATIVES                                           SBDP0148
  200 GO TO (210,290),NANG                                          SBDP0149
```

```
C     ANGLE PARTIALS                                                    SBDP0150
C     PARTIALS WRT VEHICLE STATE                                        SBDP0151
  210 CONTINUE                                                          SBDP0152
      IF(OBS(1).LT.0.D0) OBS(1)=OBS(1)+6.2831853071795864               SBDP0153
      IF(OBS(17).LT.0.D0) OBS(17)=OBS(17)+6.2831853071795864            SBDP0154
      CALL DCROSS(XSOB,CROB,OBS(18))                                    SBDP0155
      DEN1=R2OB*S1                                                      SBDP0156
      DO 220 I=1,3                                                      SBDP0157
      OBS(I+1)=CROB(I)/S2                                               SBDP0158
      OBS(I+4)=0.D0                                                     SBDP0159
      OBS(I+17)=OBS(I+17)/DEN1                                          SBDP0160
  220 OBS(I+20)=0.D0                                                    SBDP0161
C     PARTIALS WRT MEASUREMENT BIAS                                     SBDP0162
      OBS(8)=1.D0                                                       SBDP0163
      OBS(24)=1.D0                                                      SBDP0164
      GO TO (230,240),MTIM                                              SBDP0165
C     PARTIALS WRT OBSERVING STATION CLOCK BIAS                         SBDP0166
  230 OBS(9)=DDOT(OBS(2),Z1)                                            SBDP0167
      OBS(25)=DDOT(OBS(18),Z1)                                          SBDP0168
  240 GO TO (250,260),MLT                                               SBDP0169
C     PARTIALS WRT SPEED OF LIGHT                                       SBDP0170
  250 OBS(10)=DDOT(OBS(2),XV(4))*RATOB*RSPLT2                           SBDP0171
      OBS(26)=DDOT(OBS(18),XV(4))*RATOB*RSPLT2                          SBDP0172
  260 GO TO (270,290),MSTA                                              SBDP0173
C     PARTIALS WRT STATION LOCATION ERRORS                              SBDP0174
  270 CALL DMVTRN(TB2CO,OBS(2),OBS(11),2,1)                             SBDP0175
      CALL DMVTRN(TB2CO,OBS(18),OBS(27),2,1)                            SBDP0176
      DO 280 I=11,13                                                    SBDP0177
      OBS(I+3)=0.D0                                                     SBDP0178
      OBS(I+19)=0.D0                                                    SBDP0179
      OBS(I)=-OBS(I)                                                    SBDP0180
  280 OBS(I+16)=-OBS(I+16)                                              SBDP0181
C     RANGING AND DOPPLER OBSERVABLE PARTIALS                           SBDP0182
C     PARTIALS WRT VEHICLE STATE                                        SBDP0183
C     NORMALIZE RANGE VECTORS                                           SBDP0184
  290 DO 300 I=1,3                                                      SBDP0185
      XSOB(I)=XSOB(I)/RATOB                                             SBDP0186
      XSTR(I)=XSTR(I)/RATTR                                             SBDP0187
      XSOBX(I)=XSOBX(I)/RATOBX                                          SBDP0188
  300 XSTRX(I)=XSTRX(I)/RATTRX                                          SBDP0189
C     PARTIALS WRT TRANSMITTING STATION LOCATION ARE USED IN THE VEHICLESBDP0190
C     STATE PARTIALS AND WILL BE CALCULATED HERE                        SBDP0191
      CALL DCROSS(OMG,XSTRX,OBS(62))                                    SBDP0192
      CALL DCROSS(OMG,OBS(62),DUM1)                                     SBDP0193
      CALL DCROSS(OMG,DUM1,DUM2)                                        SBDP0194
      DO 310 I=1,3                                                      SBDP0195
  310 DUM2(I)=(TAU*(OBS(I+61)+.5D0*TAU*(DUM1(I)+TAU*DUM2(I)/3.D0))+XSTRXSBDP0196
     1(I)-XSTR(I))*CONST                                                SBDP0197
      DEN1=DDOT(XSTR,RTTR(4))*RSPLT                                     SBDP0198
      CX=DDOT(DUM2,RTTR(4))*RSPLT                                       SBDP0199
      CY=DDOT(DUM2,RTTRX(4))*RSPLT                                      SBDP0200
      DO 320 I=1,3                                                      SBDP0201
      DUM1(I)=XSOB(I)+XSTR(I)                                           SBDP0202
      OBS(I+33)=DUM1(I)*(1.D0-DEN1)                                     SBDP0203
      OBS(I+36)=0.D0                                                    SBDP0204
      OBS(I+49)=DUM1(I)*(CONST+CX)-(XSOBX(I)+XSTRX(I))*(CONST+CY)       SBDP0205
  320 OBS(I+52)=CONST*TAU*(XSOBX(I)+XSTRX(I))                           SBDP0206
C     PARTIALS WRT MEASUREMENT BIAS                                     SBDP0207
      OBS(40)=1.D0                                                      SBDP0208
      OBS(56)=TAU                                                       SBDP0209
      GO TO (330,340),MTIM                                              SBDP0210
C     PARTIALS WRT OBSERVING STATION CLOCK BIAS                         SBDP0211
  330 RDOT=DDOT(XSOB,XSOB(4))+DDOT(XSTR,XSTR(4))                        SBDP0212
      OBS(41)=RDOT                                                      SBDP0213
      OBS(57)=CONST*(RDOT-DDOT(XSOBX,XSOBX(4))-DDOT(XSTRX,XSTRX(4)))    SBDP0214
  340 GO TO (350,360),MLT                                               SBDP0215
C     PARTIALS WRT SPEED OF LIGHT                                       SBDP0216
  350 OBS(42)=RATOB*RSPLT2*DDOT(OBS(34),XV(4))-RSPLT*(RATOB+RATTR)*(DEN1SBDP0217
     1+1.D0)                                                            SBDP0218
      OBS(58)=RSPLT2*(DDOT(OBS(50),XV(4))*RATOB-DDOT(OBS(50),XV(10))*RATSBDP0219
     1OBX+DDOT(DUM2,RTTR(4))*(RATOB+RATTR)-DDOT(DUM2,RTTRX(4))*(RATOBX+RSBDP0220
     2ATTRX))-CONST*RSPLT*(RATOB+RATTR-RATOBX-RATTRX)                   SBDP0221
  360 GO TO (370,410),MSTA                                              SBDP0222
C     PARTIALS WRT STATION LOCATION ERRORS                              SBDP0223
  370 CALL DMVTRN(TB2CO,XSOB,OBS(43),2,1)                               SBDP0224
```

```
      CALL DMVTRN(TB2CT,XSTR,OBS(46),2,1)                               SBDP0225
      DO 380 I=43,48                                                    SBDP0226
  380 OBS(I)=-OBS(I)                                                    SBDP0227
      CALL DMVTRN(TB2CT,DUM2,OBS(62),2,1)                               SBDP0228
      CALL DCROSS(OMG,XSOBX,OBS(59))                                    SBDP0229
      CALL DCROSS(OMG,OBS(59),DUM1)                                     SBDP0230
      CALL DCROSS(OMG,DUM1,DUM2)                                        SBDP0231
      DO 390 I=1,3                                                      SBDP0232
  390 DUM2(I)=(TAU*(OBS(I+58)+.5D0*TAU*(DUM1(I)+TAU*DUM2(I)/3.D0))+XSOBXSBDP0233
     1(I)-XSOB(I))*CONST                                                SBDP0234
      CALL DMVTRN(TB2CO,DUM2,OBS(59),2,1)                               SBDP0235
      IF(MODE.EQ.3) GO TO 410                                           SBDP0236
C     ADD STATION LOCATION PARTIALS FOR TWO-WAY DOPPLER                 SBDP0237
      DO 400 I=59,61                                                    SBDP0238
      OBS(I-16)=OBS(I-16)+OBS(I-13)                                     SBDP0239
  400 OBS(I)=OBS(I)+OBS(I+13)                                           SBDP0240
  410 RETURN                                                            SBDP0241
      END
```

Subroutine: SBEV2

Purpose: Computes station and beacon critical events and occulting times. Creates an ordered array of those times when the vehicle comes into view or goes out of view for tracking stations and beacons.

Calling Sequence: CALL SBEV2 (XI,TI,KI,TIM,S,NRS,NCS,ISS,SECR,ISEE, ISTIM,STIME,MBØD)

Input and Output

I/Ø	Symbolic Name or Location	Program Dimensions	Math Symbol	Data Dimensions or Units	Definition
I	XI	(6)		km, km/sec	State vector of vehicle with respect to central body, equator and equinox of 1950.0
I	TI	(2)		days	Whole and fractional days from 1950 Jan 0.0
I	KI				Current central body number.
I	TIM	(2)		seconds	Minimum and maximum times (from epoch) defining interval of investigation.
I	S	(NRS,NCS)			Data array for stations/beacons
I	NRS,NCS				Dimensions of S.
I	ISS	(12)			Numbers of stations or beacons to be considered. List is terminated by a zero.
Ø	SECR	(12)		seconds	Time from epoch to make observations for stations or beacons given in corresponding ISS.
Ø	ISEE	(12)			Inview indicator, for station given in ISS. 0, in view -1, out of view.
Ø	ISTIM	(50)			Event indicator, in conjunction with STIME times. +, station into view -, station our of view 13, occulting starts 14, occulting stops

Input and Output - Continued

I/Ø	Symbolic Name or Location	Program Dimensions	Math Symbol	Data Dimensions or Units	Definition
Ø	STIME	(40)		seconds	Ordered array of times from epoch at which ISTIME events occur.
I	MBØD	(4)			(1) Stations, set = 0. Beacons, number of body on which beacons are located. (2) = 0, no occulting bodies. (2)-(3) Occulting bodies. (4) Total number of critical events found.

Common storages used: /INPCØM/

Subroutines required: CRITA, CRITØ, DØT, EXINST, FNØRM, GHA, MNA, MTRN, NUTAIT, PARAB, QUARTC, RØTEQ, SHIF2, SØRDR, STAT, TFRAC, VNØRM, VTRN, VTRT

```
$IBFTC MC13JW  NOREF,M94,NODD,XR3
CMC13JW  SBEV2 A VERSION OF SBEV1                                       SBV20001
      SUBROUTINE SBEV2(XI,TI,KI,TIM,S,NRS,NCS,ISS,SECR,ISEE,ISTIM,STIME,SBV20002
     1MBOD)                                                             SBV20003
C                                                                       SBV20004
C SBEV2 DETERMINES AQUISITION TIMES FOR TRACKING STATIONS AND BEACONS   SBV20005
C     SUBROUTINES REQUIRED BY SBEV                                      SBV20006
C         CRITA,    CRITO,    DOT,      GHA,      MNA,      NUTAIT      SBV20007
C        PARAB,    QUARTC,   ROTEQ,    SETN,     SHIFT                 SBV20008
C         SORDR,    STAT,     STEPD,    TFRAC,    VNORM,  MTRN,VTRN,VTRTSBV20009
C                                                                       SBV20010
C     MBOD(1)=0 FOR TRACKING STATIONS.  =BODY ON WHICH BEACONS ARE MOUNTSBV20011
C     MBOD(2) TO (4) = OCCULTING BODIES TO BE CONSIDERED                SBV20012
      DIMENSION    IMAX(15)                                             SBV20013
      DIMENSION  XI(6),      TI(3),      S(NRS,NCS)                     SBV20014
     1,            ISS(12),      ISEE(12),     ISTIM(50),        SECR(12)SBV20015
     2,          STIME(50),       AN(3,3),        A(3,3),         EN(3,3)SBV20016
     3,                          ISEK(15),    XOUT(6,10),          XO(6)SBV20017
     4,             TO(2),         TST(3),    STOR(3,15),           R(3)SBV20018
     5,             RS(3),         RT(3),         SC(5),         TDUM(3)SBV20019
     6,            DUM(3),         DT(2),         BB(2),         BRAD(2)SBV20020
     7,           MBOD (4),        U1(3),         U2(3),         ISC(15)SBV20021
     8,             UM(10),      BNAM(10),    BODC(10,8)                SBV20022
     9,             TIM(2),         XX(6),                         TT(2)SBV20023
     1,          XKO(6,10),         AA(2)                              SBV20024
      COMMON/INPCOM/C(700)/WCOM/IW(550),CW(1450)/EXIC/W(36),CRX(9,2)    SBV20025
      EQUIVALENCE  (C(11),BNAM),      (C(21),UM),      (C(11),BODC)     SBV20026
     1,            (C(5),DTR),        (C(6),SPMSD),    (C(7),RSPMSD)    SBV20027
      EQUIVALENCE              (NOR,POR)                                SBV20028
      EQUIVALENCE  (IW(489),ITRIG),  (IW(490),KOUNT)                    SBV20029
      DOUBLE PRECISION TWR                                              SBV20030
      LOGICAL NOCUL,IMOO,IBEA                                           SBV20031
      NOR=KI                                                            SBV20032
      TSECO=TIM(1)                                                      SBV20033
      IBEA=NCS.EQ.10                                                    SBV20034
      LL=3                                                              SBV20035
      LH=6                                                              SBV20036
      NB=1                                                              SBV20037
      IF(NCS.EQ.12) GO TO 1                                             SBV20038
      LL=2                                                              SBV20039
      LH=5                                                              SBV20040
      NB=MBOD(1)                                                        SBV20041
1     CONTINUE                                                          SBV20042
      IMOO=NB.EQ.2                                                      SBV20043
      NN=-2                                                             SBV20044
      TSTP=TSECO                                                        SBV20045
      TSEC=TSECO                                                        SBV20046
      FLTIM=TIM(2)                                                      SBV20047
      DELTX=(FLTIM - TSECO)/3.3                                         SBV20048
      TISEC=TI(2)*SPMSD                                                 SBV20049
      TIME=TI(1)+TI(2)                                                  SBV20050
      CALL ROTEQ(TIME,A)                                                SBV20051
      CALL NUTAIT(TIME,WM,CR,DA,EN,EPSIL)                               SBV20052
      DO 3 I=1,NCS                                                      SBV20053
      IF(ISS(I)) 4,4,2                                                  SBV20054
2     ISC(I)=ISS(I)                                                     SBV20055
3     CONTINUE                                                          SBV20056
      I=NCS+1                                                           SBV20057
4     NKK=I-1                                                           SBV20058
      NOCUL=MBOD(2).EQ.0                                                SBV20059
      IF(NOCUL) GO TO 7                                                 SBV20060
      DO 6 I=2,4                                                        SBV20061
      IF(MBOD(I)) 7,7,5                                                 SBV20062
5     NKK=NKK+1                                                         SBV20063
      ISC(NKK)=-MBOD(I)                                                 SBV20064
6     CONTINUE                                                          SBV20065
7     CONTINUE                                                          SBV20066
      DO 17 I=1,NKK                                                     SBV20067
17    IMAX(I)=1                                                         SBV20068
      IF(IMOO) GO TO 8                                                  SBV20069
      CALL GHA(TISEC,TI(1),GHAR,EN(2,1),WET)                            SBV20070
      GHAR=GHAR*DTR                                                     SBV20071
      GO TO 9                                                           SBV20072
8     CONTINUE                                                          SBV20073
      CALL MTRN(EN,A,AN)                                                SBV20074
```

```
      CALL MNA(TIME,WM,CR,DA,EPSIL,RR,G,GP,WW,EN)                       SBV20075
      CALL MTRN(EN,AN,A)                                                SBV20076
      GHAR=0.                                                           SBV20077
9     CONTINUE                                                          SBV20078
      DO 11 I=1,3                                                       SBV20079
      DO 11 J=1,3                                                       SBV20080
11    AN(I,J)=A(I,J)                                                    SBV20081
      KULT=-1                                                           SBV20082
      BRAD(1)=BODC(NB,3)                                                SBV20083
      BRAD(2)=BODC(NB,4)                                                SBV20084
      WE=BODC(NB,7)                                                     SBV20085
      NTT=2                                                             SBV20086
      IF(NOCUL) NTT=4                                                   SBV20087
      KKK=0                                                             SBV20088
      NHEAD=1                                                           SBV20089
       GHAM=0.                                                          SBV20090
      GHAN=0.                                                           SBV20091
      DO 111 I=1,6                                                      SBV20092
 111  XO(I)=XI(I)                                                       SBV20093
      TO(1)=TI(1)                                                       SBV20094
      TO(2)=TI(2)                                                       SBV20095
      GO TO 119                                                         SBV20096
10    CONTINUE                                                          SBV20097
 112  TWR=TSTP                                                          SBV20098
      N=3                                                               SBV20099
113   CONTINUE                                                          SBV20100
      M=1                                                               SBV20101
      CALL EXINST(TWR,M,N,XO,XO(4),W,CRX,10,ITRIG,KOUNT)                SBV20102
      IF(N.EQ.3) GO TO 118                                              SBV20103
      IF(M.EQ.0.OR.N.EQ.1) GO TO 113                                    SBV20104
      N=-N                                                              SBV20105
      POR=CRX(7,N)                                                      SBV20106
      NOR=NOR                                                           SBV20107
      GO TO 112                                                         SBV20108
 118  CALL TFRAC(TI(1),TI(2)+(TSTP-TSECO)*RSPMSD,TO(1),TO(2))           SBV20109
      TSEC=TSTP                                                         SBV20110
 119  CONTINUE                                                          SBV20111
      CALL SHIF2(NTT,NOR,TO,XO,NB,XOUT)                                 SBV20112
      GHAN=GHAR+(TSEC-TSECO)*WE                                         SBV20113
      CALL VTRN(AN,XOUT(1,NB),R)                                        SBV20114
      V2=DOT(XO(4),XO(4))                                               SBV20115
      RDV=DOT(XO,XO(4))                                                 SBV20116
      R2=DOT(XO,XO)                                                     SBV20117
      RN=SQRT(R2)                                                       SBV20118
      DELTY=C(10)/(WE+SQRT(V2-RDV*RDV/R2)/RN)                           SBV20119
      IF(DELTY.GT.DELTX) DELTY=DELTX                                    SBV20120
      TSTP=TSTP+DELTY                                                   SBV20121
      NN=NN+1                                                           SBV20122
      TST(3)=TST(2)                                                     SBV20123
      TST(2)=TST(1)                                                     SBV20124
      TST(1)=TSEC                                                       SBV20125
      IF(NOCUL) GO TO 20                                                SBV20126
      KULT=-1                                                           SBV20127
      RTB=VNORM(XOUT(1,NB),U1)                                          SBV20128
20    CONTINUE                                                          SBV20129
      DO 80 II=1,NKK                                                    SBV20130
      NST=ISC(II)                                                       SBV20131
      IF(NST) 23,80,21                                                  SBV20132
21    CONTINUE                                                          SBV20133
      CALL STAT(S(LL,NST),GHAN,EN,RT,SC,BRAD)                           SBV20134
      DO 22 I=1,3                                                       SBV20135
22    RT(I)=R(I)-RT(I)                                                  SBV20136
      CALL VTRT(EN,RT,RS)                                               SBV20137
      EL=ATAN(-RS(3)/SQRT(RS(1)*RS(1)+RS(2)*RS(2)))-S(LH,NST)           SBV20138
      GO TO 24                                                          SBV20139
23    CONTINUE                                                          SBV20140
      KB=-NST                                                           SBV20141
      RFB=VNORM(XOUT(1,KB),U2)                                          SBV20142
      RB=BODC(KB,3)                                                     SBV20143
      EL=DOT(U1,U2)-SQRT(RFB*RFB-RB*RB)/RFB                             SBV20144
      DO 230 I=1,3                                                      SBV20145
230   U2(I)=XOUT(I,NB)-XOUT(I,KB)                                       SBV20146
      RFEO=FNORM(U2)                                                    SBV20147
      KULT=-1                                                           SBV20148
      RBB=1.1*RTB                                                       SBV20149
```

```
      IF(RFEO.GT.RBB) KULT=0                                            SBV20150
24    CONTINUE                                                          SBV20151
      STOR(3,II)=STOR(2,II)                                             SBV20152
      STOR(2,II)=STOR(1,II)                                             SBV20153
      STOR(1,II)=EL                                                     SBV20154
      IF(NN) 25,80,40                                                   SBV20155
25    IF(EL) 29,29,26                                                   SBV20156
26    IF(NST)27,28,28                                                   SBV20157
27    KKK=KKK+1                                                         SBV20158
      ISTIM(KKK)=13                                                     SBV20159
      STIME(KKK)=TSEC                                                   SBV20160
      ISEK(II)=3                                                        SBV20161
      CALL CRITA(TSEC,BNAM(KB),BNAM(NB),6    ,1)                        SBV20162
      DO 270 I=1,NCS                                                    SBV20163
270   SECR(I)=FLTIM                                                     SBV20164
      GO TO 80                                                          SBV20165
29    CONTINUE                                                          SBV20166
      ISEK(II)=1                                                        SBV20167
      IF(NST) 80,80,30                                                  SBV20168
28    CONTINUE                                                          SBV20169
      ISEK(II)=3                                                        SBV20170
      IF(IBEA) GO TO 295                                                SBV20171
      ISEK(II)=2                                                        SBV20172
      IF(EL.GT.S(7,NST)-S(LH,NST))GO TO 296                             SBV20173
295   ISEE(II)=0                                                        SBV20174
      SECR(II)=TSEC                                                     SBV20175
      KSW=2                                                             SBV20176
      GO TO 31                                                          SBV20177
296   IMAX(II)=2                                                        SBV20178
30    CONTINUE                                                          SBV20179
      ISEE(II)=-1                                                       SBV20180
      KSW=1                                                             SBV20181
31    CONTINUE                                                          SBV20182
      EL=EL+S(LH,NST)                                                   SBV20183
      CALL CRITO(TST(1),S(1,NST),KSW,RS,EL,6    ,NHEAD)                 SBV20184
      GO TO 80                                                          SBV20185
40    CONTINUE                                                          SBV20186
      IF(KULT.EQ.0) GO TO 80                                            SBV20187
      CALL PARAB(TST,STOR(1,II),AA)                                     SBV20188
      AD=0.                                                             SBV20189
      JJ=ISEK(II)                                                       SBV20190
      KSAV=IMAX(II)                                                     SBV20191
      IF(JJ.EQ.2) AD=S(7,NST)-S(6,NST)                                  SBV20192
41    CONTINUE                                                          SBV20193
      CALL QUARTC(STOR(2,II),AD,AA,DT,KK)                               SBV20194
      IF(KK) 42,44,44                                                   SBV20195
42    CONTINUE                                                          SBV20196
      IF(NST.LT.0.OR.IBEA) GO TO 79                                     SBV20197
      IF(JJ+KSAV.EQ.3) GO TO 43                                         SBV20198
      IF(JJ.EQ.3.AND.AA(1).GT.0.) JJ=2                                  SBV20199
      GO TO 79                                                          SBV20200
43    JJ=3                                                              SBV20201
      AD=0.                                                             SBV20202
      GO TO 41                                                          SBV20203
44    CONTINUE                                                          SBV20204
      GO TO (445,440,445),JJ                                            SBV20205
440   IF(STOR(2,II).LT.0..AND.KSAV.EQ.1) GO TO 43                       SBV20206
445   CONTINUE                                                          SBV20207
      DELT=TST(2)-TST(3)                                                SBV20208
      DTEST=DT(2)                                                       SBV20209
      IF(JJ+KSAV.EQ.4) DTEST=DT(1)                                      SBV20210
      IF(DTEST) 45,45,79                                                SBV20211
45    CONTINUE                                                          SBV20212
      IF(DELT+DTEST.LT.0.) GO TO 42                                     SBV20213
      GO TO(47,46,47),JJ                                                SBV20214
46    DSAV=DT(1)                                                        SBV20215
 47   CONTINUE                                                          SBV20216
48    CONTINUE                                                          SBV20217
      DUM(1)=STOR(2,II)                                                 SBV20218
      DUM(3)=STOR(3,II)                                                 SBV20219
      TDUM(1)=TST(2)- TST(1)                                            SBV20220
      TDUM(2)=TDUM(1) + DTEST                                           SBV20221
      TDUM(3)=TST(3)- TST(1)                                            SBV20222
      NJAZ=1                                                            SBV20223
49    CONTINUE                                                          SBV20224
```

```
      NJAZ=NJAZ+1                                                       SBV20225
      TWR=TDUM(2)+TSEC                                                  SBV20226
490   CONTINUE                                                          SBV20227
      N=3                                                               SBV20228
491   CONTINUE                                                          SBV20229
      M=1                                                               SBV20230
      CALL EXINST(TWR,M,N,XX,XX(4),W,CRX,10,ITRIG,KOUNT)                SBV20231
      IF(N.EQ.3) GO TO 495                                              SBV20232
      IF(M.EQ.0.OR.N.EQ.1) GO TO 491                                    SBV20233
      N=-N                                                              SBV20234
      POR=CRX(7,N)                                                      SBV20235
      NOR=NOR                                                           SBV20236
      GO TO 490                                                         SBV20237
 495  CONTINUE                                                          SBV20238
      CALL TFRAC(TO(1),TO(2)+TDUM(2)*RSPMSD,TT(1),TT(2))                SBV20239
      CALL SHIF2(NTT,NOR,TT,XX,NB,XKO)                                  SBV20240
      IF(NST) 50,51,51                                                  SBV20241
50    CONTINUE                                                          SBV20242
      RFB=VNORM(XKO(1,KB),U2)                                           SBV20243
      EL=DOT(U1,U2)-SQRT(RFB*RFB-RB*RB)/RFB                             SBV20244
      CON=.0001                                                         SBV20245
      GO TO 55                                                          SBV20246
51    CONTINUE                                                          SBV20247
      CALL VTRN(AN,XKO(1,NB),XX)                                        SBV20248
      GHAM=GHAN + TDUM(2)*WE                                            SBV20249
      CALL STAT(S(LL,NST),GHAM,EN,RT,SC,BRAD)                           SBV20250
      DO 54 I=1,3                                                       SBV20251
54    RT(I)=XX(I)-RT(I)                                                 SBV20252
      CALL VTRT(EN,RT,RS)                                               SBV20253
      EL=ATAN(-RS(3)/SQRT(RS(1)*RS(1)+RS(2)*RS(2)))-S(LH,NST)           SBV20254
      CON=.002                                                          SBV20255
55    IF(ABS(EL-AD)-CON) 61,56,56                                       SBV20256
56    CONTINUE                                                          SBV20257
      IF(NJAZ.GT.10) GO TO 61                                           SBV20258
      DUM(2)=EL                                                         SBV20259
      CALLPARAB(TDUM,DUM,BB)                                            SBV20260
      CALL QUARTC(DUM(2),AD,BB,DT,KK)                                   SBV20261
      IF(KK) 42,57,57                                                   SBV20262
57    CONTINUE                                                          SBV20263
      DTEST=DT(2)                                                       SBV20264
      IF(JJ+KSAV.EQ.4) DTEST=DT(1)                                      SBV20265
      K=1                                                               SBV20266
      IF(DTEST.GT.0.) K=3                                               SBV20267
      DUM(K)=DUM(2)                                                     SBV20268
      TDUM(K)=TDUM(2)                                                   SBV20269
      TDUM(2)=TDUM(2)+DTEST                                             SBV20270
      GO TO 49                                                          SBV20271
61    CONTINUE                                                          SBV20272
      KKK=KKK+1                                                         SBV20273
      STIME(KKK)=TST(1)+TDUM(2)                                         SBV20274
      GO TO(62,65,68),JJ                                                SBV20275
62    CONTINUE                                                          SBV20276
      IF(NST) 63,64,64                                                  SBV20277
63    ISTIM(KKK)=13                                                     SBV20278
      CALL CRITA(STIME(KKK),BNAM(KB),BNAM(NB),6    ,1)                  SBV20279
      JJ=3                                                              SBV20280
      IF(AA(2)) 41,79,79                                                SBV20281
64    CONTINUE                                                          SBV20282
      ISTIM(KKK) = II                                                   SBV20283
      EL=EL+S(LH,NST)                                                   SBV20284
      CALL CRITO(STIME(KKK),S(1,NST),2,        RS,EL,6    ,NHEAD)       SBV20285
      JJ=2                                                              SBV20286
      IF(IBEA) JJ=3                                                     SBV20287
      IF(AA(2).GT.0.) GO TO 79                                          SBV20288
      AD=S(7,NST)-S(6,NST)                                              SBV20289
      IF(IBEA) AD=0.                                                    SBV20290
      GO TO 41                                                          SBV20291
65    CONTINUE                                                          SBV20292
      GO TO(66,75),KSAV                                                 SBV20293
66    ISTIM(KKK)=-II                                                    SBV20294
      EL=EL+S(LH,NST)                                                   SBV20295
      CALL CRITO(STIME(KKK),S(1,NST),1,        RS,EL,6    ,NHEAD)       SBV20296
      KSAV=2                                                            SBV20297
      IF(TST(2)+DSAV.LE.TDUM(2)+TST(1).OR.TST(2)+DSAV.GT.TST(1))GO TO 79SBV20298
      IF(DSAV.GT.0.) GO TO 67                                           SBV20299
```

```
      DTEST=DSAV                                                        SBV20300
      GO TO 48                                                          SBV20301
67    CONTINUE                                                          SBV20302
      DUM(1)=STOR(1,II)                                                 SBV20303
      DUM(3)=STOR(2,II)                                                 SBV20304
      TDUM(1)=0.                                                        SBV20305
      TDUM(3)=TST(2)-TST(1)                                             SBV20306
      TDUM(2)=TDUM(3)+DSAV                                              SBV20307
      GO TO 49                                                          SBV20308
68    CONTINUE                                                          SBV20309
      IF(NST) 69,70,70                                                  SBV20310
69    ISTIM(KKK)=14                                                     SBV20311
      CALL CRITA(STIME(KKK),BNAM(KB),BNAM(NB),6    ,2)                  SBV20312
      GO TO 71                                                          SBV20313
70    CONTINUE                                                          SBV20314
      ISTIM(KKK)= -II                                                   SBV20315
      EL=EL+S(LH,NST)                                                   SBV20316
      CALL CRITO(STIME(KKK),S(1,NST),1,        RS,EL,6    ,NHEAD)       SBV20317
71    JJ=1                                                              SBV20318
      IF(AA(2)) 79,79,41                                                SBV20319
75    CONTINUE                                                          SBV20320
      KSAV=1                                                            SBV20321
      ISTIM(KKK) = II                                                   SBV20322
      EL=EL+S(LH,NST)                                                   SBV20323
      CALL CRITO(STIME(KKK),S(1,NST),2,        RS,EL,6    ,NHEAD)       SBV20324
      JJ=3                                                              SBV20325
      AD=0.                                                             SBV20326
      GO TO 41                                                          SBV20327
79    CONTINUE                                                          SBV20328
      ISEK(II)=JJ                                                       SBV20329
      IMAX(II)=KSAV                                                     SBV20330
80    CONTINUE                                                          SBV20331
      IF(NN) 10,10,81                                                   SBV20332
81    IF(TST(2).GE.FLTIM) GO TO 82                                      SBV20333
      IF(KKK-38) 10,83,83                                               SBV20334
82    KKK=KKK+1                                                         SBV20335
      STIME(KKK)=FLTIM + 99999.                                         SBV20336
83    CONTINUE                                                          SBV20337
      MBOD(4)=KKK                                                       SBV20338
      CALL SORDR(STIME,ISTIM,KKK)                                       SBV20339
      RETURN                                                            SBV20340
      END                                                               SBV20341
```

Subroutine: SBTEST

Purpose: To read Unified S-Band System raw data tapes, decode the data, convert units, and, using subroutine PØLYFT, test for outliers and write the edited data in the DCP format on Unit 12. (Raw data are assumed to be in the IBM Preprocessor format.)

Calling Sequence: CALL SBTEST(IERR)

Input and Output

I/ø	Symbolic Name or Location	Program Dimensions	Math Symbol	Data Dimensions or Units	Definition
ø	IERR				Error flag. Set = 2 by SBTEST if more than 20 stations are accumlated. Set = 0 otherwise.

Common storages used: /TRKCØM/,/ØUTCØM/,/TSTCØM/,/DATCØM/,/SUMCØM/

Subroutines required: DATINP, PØLYFT

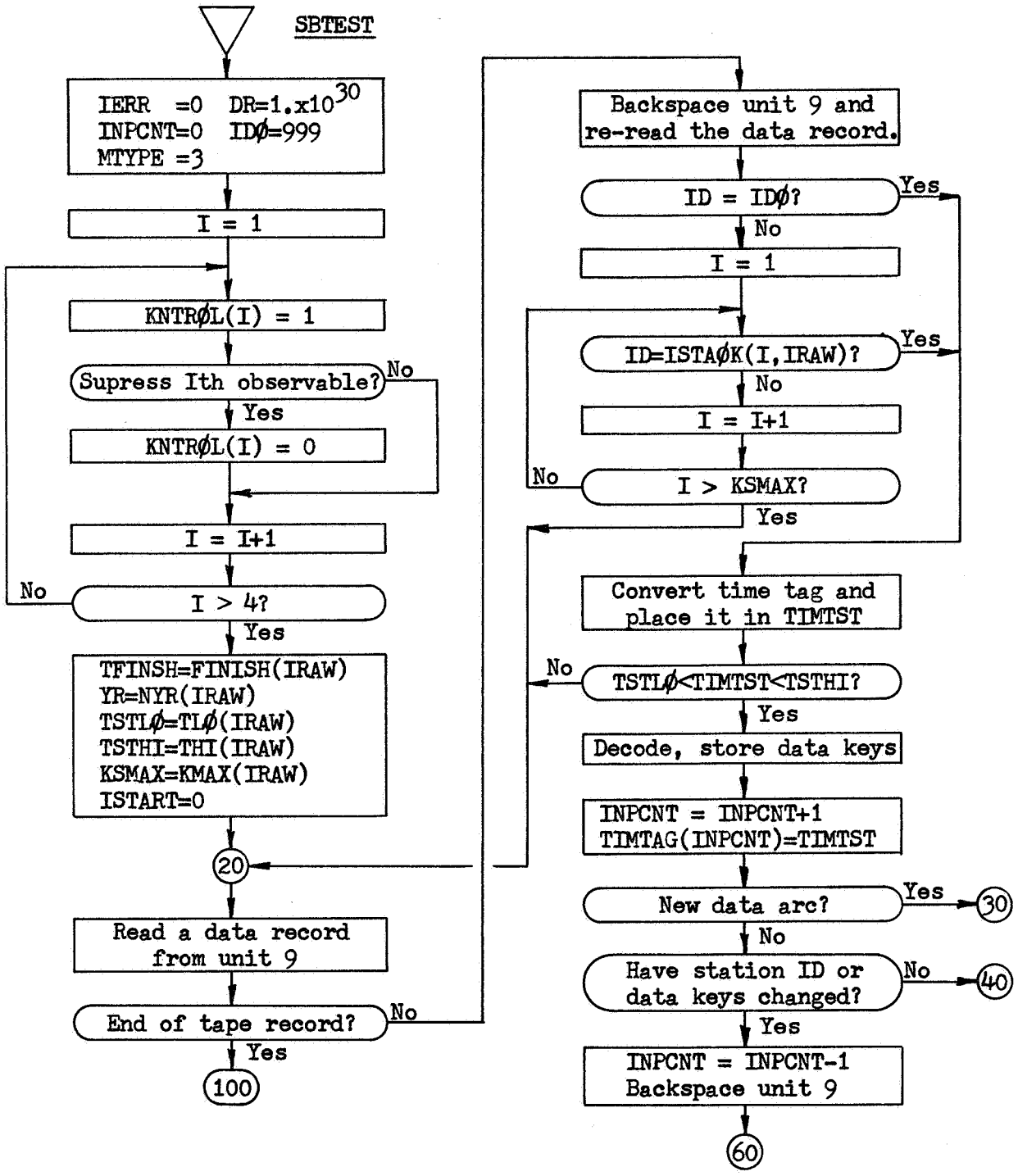
SBTEST
IERR =0 DR=1.x10^30
INPCNT=0 IDØ=999
MTYPE =3
I = 1
KNTRØL(I) = 1
Supress Ith observable?
No
Yes
KNTRØL(I) = 0
I = I+1
No
I > 4?
Yes
TFINSH=FINISH(IRAW)
YR=NYR(IRAW)
TSTLØ=TLØ(IRAW)
TSTHI=THI(IRAW)
KSMAX=KMAX(IRAW)
ISTART=0
20
Read a data record from unit 9
End of tape record?
No
Yes
100
Backspace unit 9 and re-read the data record.
ID = IDØ?
Yes
No
I = 1
ID=ISTAØK(I,IRAW)?
Yes
No
I = I+1
No
I > KSMAX?
Yes
Convert time tag and place it in TIMTST
No
TSTLØ<TIMTST<TSTHI?
Yes
Decode, store data keys
INPCNT = INPCNT+1
TIMTAG(INPCNT)=TIMTST
New data arc?
Yes
30
No
Have station ID or data keys changed?
No
40
Yes
INPCNT = INPCNT-1
Backspace unit 9
60

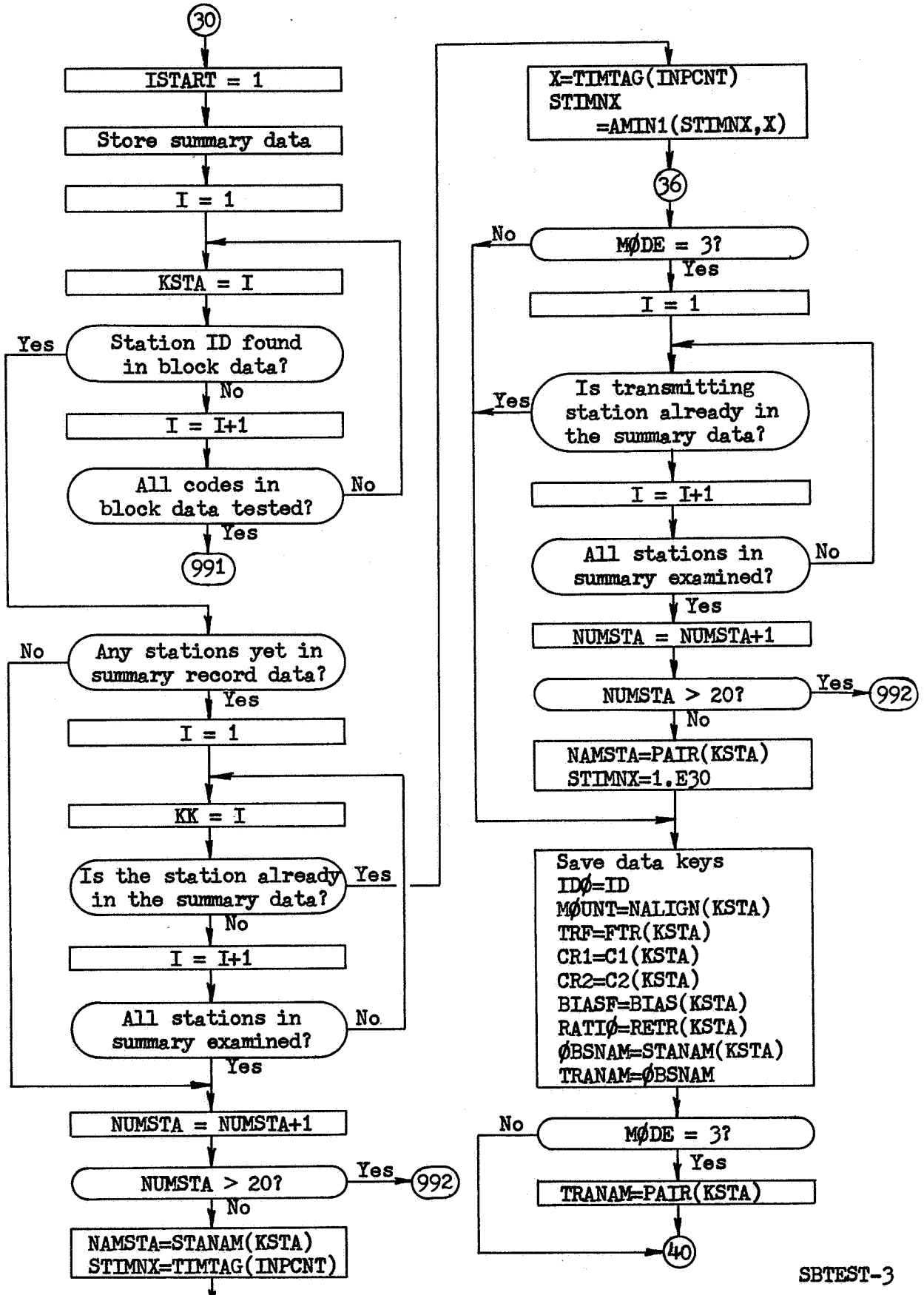
30
ISTART = 1
Store summary data
I = 1
KSTA = I
Station ID found in block data?
Yes
No
I = I+1
All codes in block data tested?
No
Yes
991
Any stations yet in summary record data?
No
Yes
I = 1
KK = I
Is the station already in the summary data?
Yes
No
I = I+1
All stations in summary examined?
No
Yes
NUMSTA = NUMSTA+1
NUMSTA > 20?
Yes
992
No
NAMSTA=STANAM(KSTA)
STIMNX=TIMTAG(INPCNT)
36
X=TIMTAG(INPCNT)
STIMNX
=AMIN1(STIMNX,X)
36
MØDE = 3?
No
Yes
I = 1
Is transmitting station already in the summary data?
Yes
I = I+1
All stations in summary examined?
No
Yes
NUMSTA = NUMSTA+1
NUMSTA > 20?
Yes
992
No
NAMSTA=PAIR(KSTA)
STIMNX=1.E30
Save data keys
IDØ=ID
MØUNT=NALIGN(KSTA)
TRF=FTR(KSTA)
CR1=C1(KSTA)
CR2=C2(KSTA)
BIASF=BIAS(KSTA)
RATIØ=RETR(KSTA)
ØBSNAM=STANAM(KSTA)
TRANAM=ØBSNAM
MØDE = 3?
No
Yes
TRANAM=PAIR(KSTA)
40

SBTEST-3

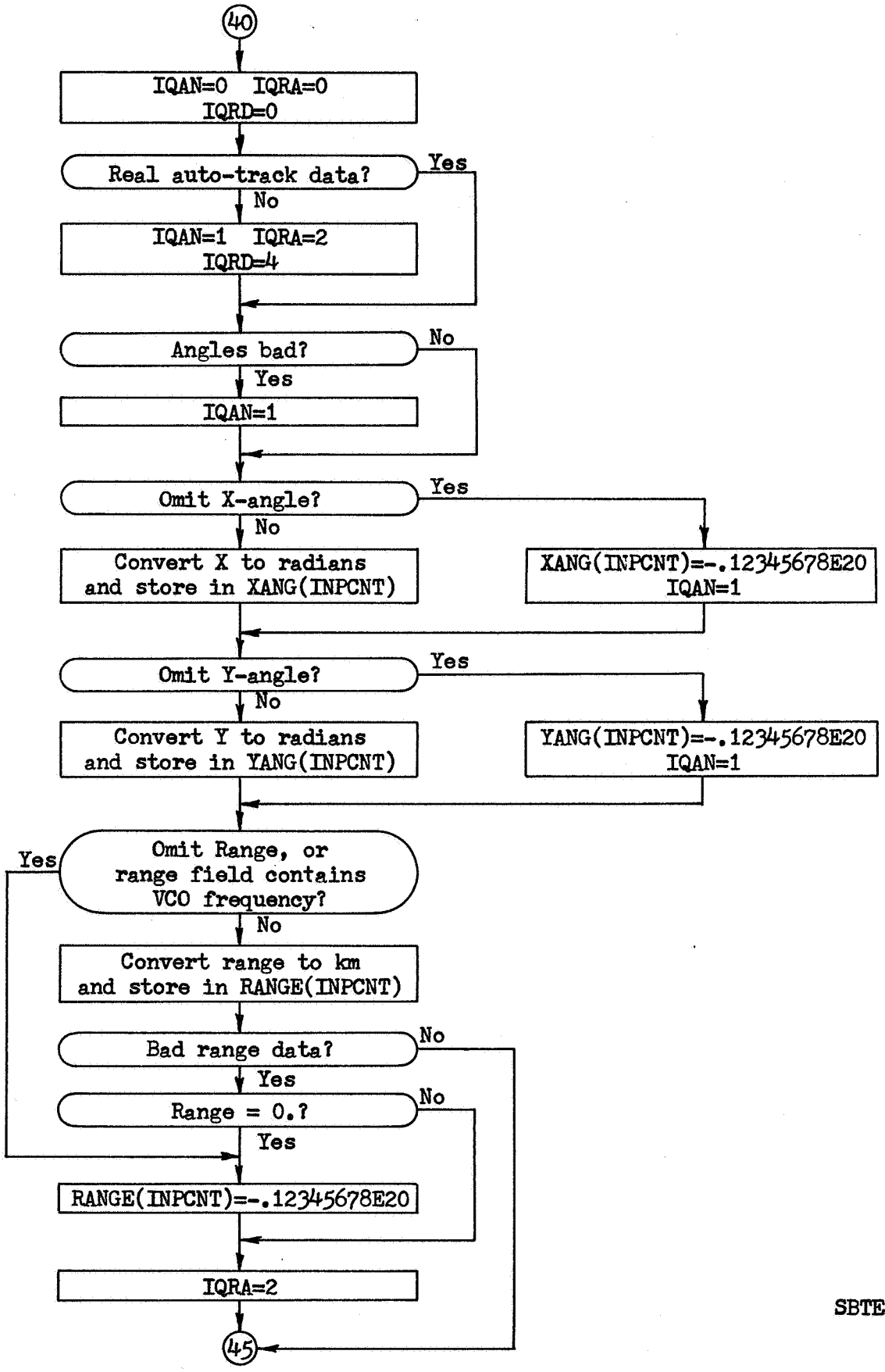
40
IQAN=0 IQRA=0
IQRD=0
Real auto-track data?
Yes
No
IQAN=1 IQRA=2
IQRD=4
Angles bad?
No
Yes
IQAN=1
Omit X-angle?
Yes
No
Convert X to radians
and store in XANG(INPCNT)
XANG(INPCNT)=-.12345678E20
IQAN=1
Omit Y-angle?
Yes
No
Convert Y to radians
and store in YANG(INPCNT)
YANG(INPCNT)=-.12345678E20
IQAN=1
Yes
Omit Range, or
range field contains
VCO frequency?
No
Convert range to km
and store in RANGE(INPCNT)
Bad range data?
No
Yes
Range = 0.?
No
Yes
RANGE(INPCNT)=-.12345678E20
IQRA=2
45

SBTEST-4

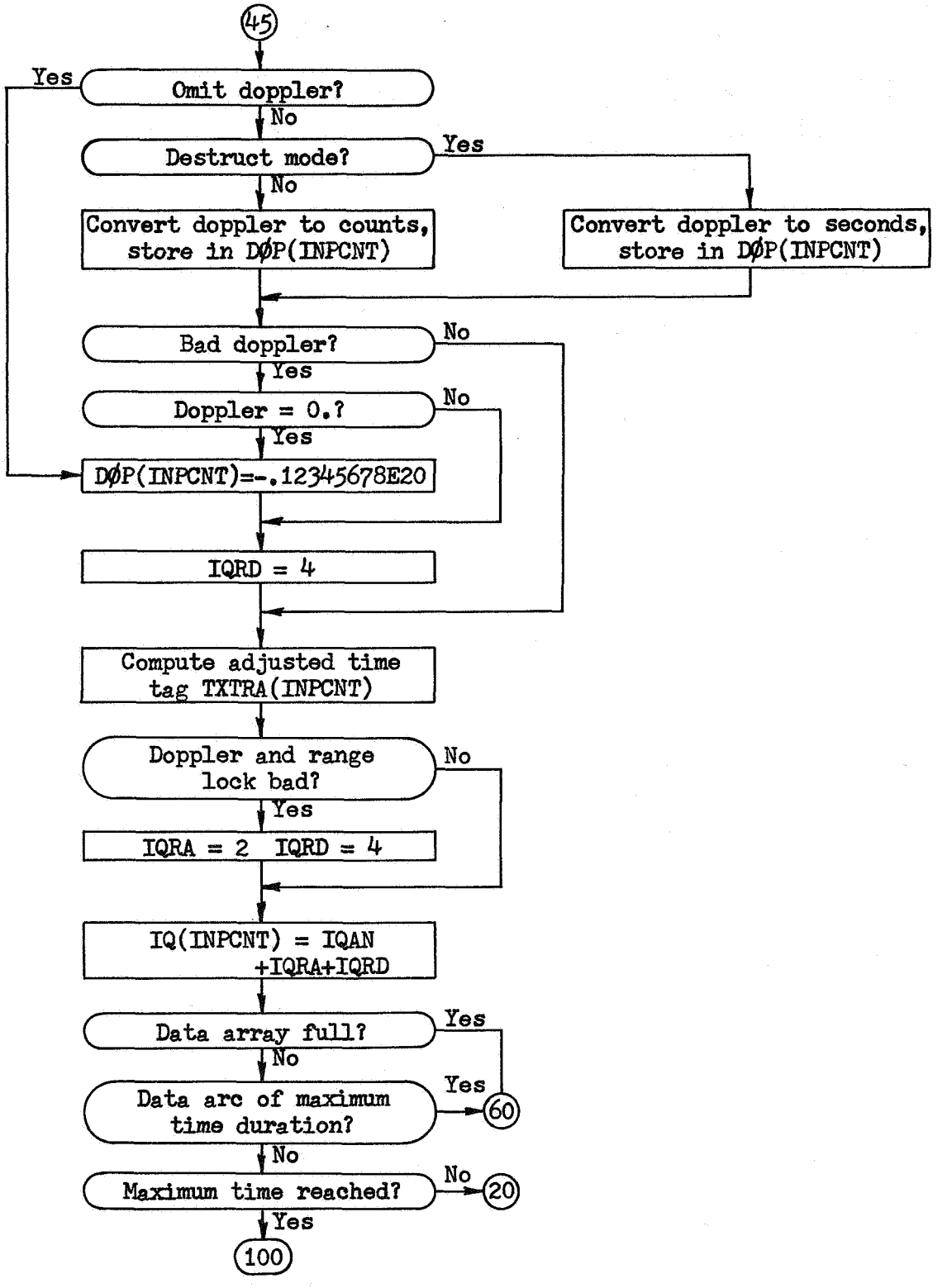
45
Omit doppler?
Yes
No
Destruct mode?
Yes
No
Convert doppler to counts, store in DØP(INPCNT)
Convert doppler to seconds, store in DØP(INPCNT)
Bad doppler?
No
Yes
Doppler = 0.?
No
Yes
DØP(INPCNT)=-.12345678E20
IQRD = 4
Compute adjusted time tag TXTRA(INPCNT)
Doppler and range lock bad?
No
Yes
IQRA = 2 IQRD = 4
IQ(INPCNT) = IQAN +IQRA+IQRD
Data array full?
Yes
No
Data arc of maximum time duration?
Yes
60
No
Maximum time reached?
No
20
Yes
100

SBTEST-5

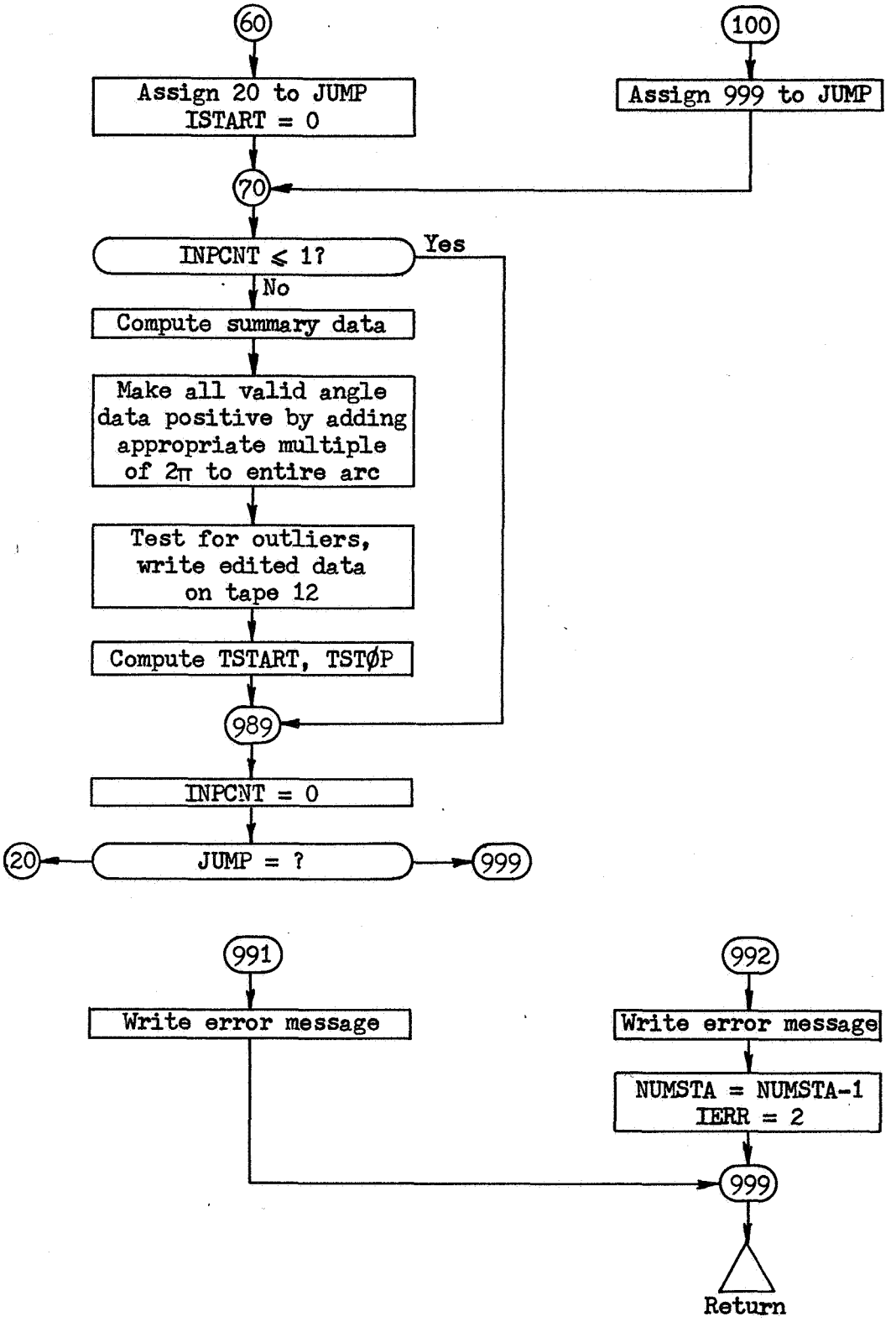
60
Assign 20 to JUMP
ISTART = 0
100
Assign 999 to JUMP
70
INPCNT ≤ 1?
Yes
No
Compute summary data
Make all valid angle data positive by adding appropriate multiple of 2π to entire arc
Test for outliers, write edited data on tape 12
Compute TSTART, TSTØP
989
INPCNT = 0
20
JUMP = ?
999
991
Write error message
992
Write error message
NUMSTA = NUMSTA-1
IERR = 2
999
Return

SBTEST-6

```
$IBFTC MC134W  M94,NODD,XR3
CMC134W   S-BAND PROCESSOR, IBM FORMAT                                  SBTS0001
      SUBROUTINE SBTEST(IERR)                                           SBTS0002
      COMMON  /TRKCOM/CTRK(700)                                         SBTS0003
      DOUBLE PRECISION  FTR(50),  C1(50),   C2(50),   BIAS(50), RETR(50)SBTS0004
      DIMENSION   STANAM(50),   KODSTA(50),   NALIGN(50),   PAIR(50)    SBTS0005
      EQUIVALENCE            (CTRK(1),STANAM),     (CTRK(51),KODSTA)    SBTS0006
     1,  (CTRK(101),NALIGN),  (CTRK(151),FTR),      (CTRK(251),C1)       SBTS0007
     2,  (CTRK(351),C2),      (CTRK(451),BIAS),     (CTRK(551),RETR)     SBTS0008
     3,  (CTRK(651),PAIR)                                               SBTS0009
C                                                                       SBTS0010
      COMMON  /OUTCOM/COUT(40)                                          SBTS0011
      DOUBLE PRECISION  ONTIME,   TFIRST,   TLAST,    TAU,      TRF     SBTS0012
     1,       CR1,       CR2,       DR,       BIASF,    RATIO           SBTS0013
      EQUIVALENCE            (COUT(1),NPAIR),      (COUT(2),NEOT)       SBTS0014
     1,  (COUT(3),OBSNAM),    (COUT(4),TRANAM),     (COUT(5),NRCD)       SBTS0015
     2,  (COUT(6),NPTBLK),    (COUT(7),KONT),       (COUT(8),MTYPE)      SBTS0016
     3,  (COUT(9),MOUNT),     (COUT(10),MOAD),      (COUT(11),DELT)      SBTS0017
     4,  (COUT(12),KTAU),     (COUT(13),ONTIME),    (COUT(15),TFIRST)    SBTS0018
     5,  (COUT(17),TLAST),    (COUT(19),TAU),       (COUT(21),TRF)       SBTS0019
     6,  (COUT(23),CR1),      (COUT(25),CR2),       (COUT(27),DR)        SBTS0020
     7,  (COUT(29),BIASF),    (COUT(31),RATIO),     (COUT(33),NB1)       SBTS0021
     8,  (COUT(34),NB2),      (COUT(35),NB3),       (COUT(36),NB4)       SBTS0022
C                                                                       SBTS0023
      COMMON  /TSTCOM/CTEST(400)                                        SBTS0024
      DOUBLE PRECISION  FINISH(10),    TLO(10),       THI(10)           SBTS0025
      DIMENSION   NYR(10),      NPTS(10),     NSTEP(10),    NDEG(10)    SBTS0026
     1,           CSD(4,10),    KNTROL(4),    IFOMIT(4,10), KMAX(10)    SBTS0027
     2,           ISTAOK(20,10)                                         SBTS0028
      EQUIVALENCE            (CTEST(1),NYR),       (CTEST(11),NPTS)     SBTS0029
     1,  (CTEST(21),NSTEP),   (CTEST(31),NDEG),     (CTEST(41),CSD)      SBTS0030
     2,  (CTEST(81),IRAW),    (CTEST(82),KNTROL),   (CTEST(87),FINISH)   SBTS0031
     3,  (CTEST(107),IFOMIT), (CTEST(147),KMAX),    (CTEST(157),ISTAOK)  SBTS0032
     4,  (CTEST(357),TLO),    (CTEST(377),THI)                           SBTS0033
C                                                                       SBTS0034
      COMMON  /DATCOM/CDAT(2400)                                        SBTS0035
      DOUBLE PRECISION TIMTAG(300)                                      SBTS0036
      DIMENSION   TXTRA(300),   IQ(300),      XANG(300),    YANG(300)   SBTS0037
     1,           RANGE(300),   DOP(300),     RDAT(300,4)               SBTS0038
      EQUIVALENCE            (CDAT(1),TIMTAG),     (CDAT(601),TXTRA)    SBTS0039
     1,  (CDAT(901),IQ),      (CDAT(1201),XANG),    (CDAT(1501),YANG)    SBTS0040
     2,  (CDAT(1801),RANGE),  (CDAT(2101),DOP),     (XANG,RDAT)          SBTS0041
C                                                                       SBTS0042
      COMMON  /SUMCOM/SUMARY(56)                                        SBTS0043
      DOUBLE PRECISION TSTART,TSTOP                                     SBTS0044
      DIMENSION   HEADER(11),   STIMNX(20)                              SBTS0045
      REAL NAMSTA(20)                                                   SBTS0046
      EQUIVALENCE            (SUMARY(1),HEADER),   (SUMARY(12),NUMSTA)  SBTS0047
     1,  (SUMARY(13),NAMSTA), (SUMARY(33),TSTART),  (SUMARY(35),TSTOP)   SBTS0048
     2,  (SUMARY(37),STIMNX)                                            SBTS0049
C                                                                       SBTS0050
      DIMENSION   IDOP(2),      IDC(5),       DI(3)                     SBTS0051
      DOUBLE PRECISION  TMAX,     TFINSH,   TIMTST,   TSTLO,    TSTHI   SBTS0052
C                                                                       SBTS0053
C     THESE TWO ARRAYS MUST HAVE THE SAME DIMENSION AS THE ARRAYS IN    SBTS0054
C     DATCOM.  THE DIMENSION IS EQUAL TO THE VARIABLE INPMAX.           SBTS0055
C     THE VARIABLE INPMAX IS SET BY A DATA STATEMENT                    SBTS0056
C     IN THIS SUBROUTINE.                                               SBTS0057
C     TO AVOID TRUNCATING GODDARD SYSTEM DATA FRAMES, INPMAX MUST       SBTS0058
C     BE A MULTIPLE OF FOUR                                             SBTS0059
      DIMENSION   HOLD(300),    ITEM(300)                               SBTS0060
C                                                                       SBTS0061
C                                                                       SBTS0062
  602 FORMAT(A2)                                                        SBTS0063
  603 FORMAT(23X,206)                                                   SBTS0064
  605 FORMAT(I2,5I1,F3.0,2F2.0,1X,F4.1,2X,O6,2X,O6,2X,F11.4,2X,206)     SBTS0065
  901 FORMAT(18H0***  STATION CODE,I3,29H DOES NOT EXIST IN BLOCK DATA/ SBTS0066
     16X,34HPROCESSING OF THIS TAPE ABANDONED./                         SBTS0067
     26X,38HPROGRAM PROCEEDS TO NEXT TAPE, IF ANY.)                     SBTS0068
  902 FORMAT(24H0***  TOO MANY STATIONS./                               SBTS0069
     16X,49HPROGRAM CONTROL PASSES TO TERMINATION OPERATIONS.)          SBTS0070
      DATA EOTIND/2HED/                                                 SBTS0071
      DATA INPMAX/300/                                                  SBTS0072
      DATA TMAX/.432D5/                                                 SBTS0073
      DATA TEST/-.12345678E20/                                          SBTS0074
```

```
      IERR=0                                                            SBTS0075
      INPCNT=0                                                          SBTS0076
      MTYPE=3                                                           SBTS0077
      IDO=999                                                           SBTS0078
C     SET RANGE AMBIGUITY LARGE                                         SBTS0079
C     IF RANGE REALLY DOES RECYCLE, YOU WILL CHANGE THIS                SBTS0080
      DR=1.D30                                                          SBTS0081
      DO 1 I=1,4                                                        SBTS0082
      KNTROL(I)=1                                                       SBTS0083
      IF(IFOMIT(I,IRAW).NE.0) KNTROL(I)=0                               SBTS0084
    1 CONTINUE                                                          SBTS0085
      YR=NYR(IRAW)                                                      SBTS0086
      TFINSH=FINISH(IRAW)                                               SBTS0087
      TSTLO=TLO(IRAW)                                                   SBTS0088
      TSTHI=THI(IRAW)                                                   SBTS0089
      KSMAX=KMAX(IRAW)                                                  SBTS0090
      ISTART=0                                                          SBTS0091
C     TEST FOR END OF TAPE INDICATOR                                    SBTS0092
   20 READ(9,602) ARCIND                                                SBTS0093
      IF(ARCIND.EQ.EOTIND) GO TO 100                                    SBTS0094
      BACKSPACE 9                                                       SBTS0095
C     READ A LINE OF DATA                                               SBTS0096
      READ(9,605) ID,IDC,DAY,HR,XMIN,SEC,IX,IY,RAN,IDOP                 SBTS0097
C     FIND IF STATION NUMBER IS UNCHANGED                               SBTS0098
      IF(ID.EQ.IDO) GO TO 22                                            SBTS0099
C     TEST IF STATION ID VALID                                          SBTS0100
      DO 21 I=1,KSMAX                                                   SBTS0101
      IF(ID.EQ.ISTAOK(I,IRAW)) GO TO 22                                 SBTS0102
   21 CONTINUE                                                          SBTS0103
      GO TO 20                                                          SBTS0104
   22 CONTINUE                                                          SBTS0105
C     DECODE DATA KEYS AND CONVERT TIME TAG                             SBTS0106
      DI(1)=YR*100.+1.                                                  SBTS0107
      DI(2)=(DAY*100.+HR)*100.+XMIN                                     SBTS0108
      DI(3)=SEC                                                         SBTS0109
      CALL DATINP(DI,TIMTST)                                            SBTS0110
C     TEST TIME TAG FOR VALID RANGE OF TIMES                            SBTS0111
      IF(TIMTST.LT.TSTLO.OR.TIMTST.GT.TSTHI) GO TO 20                   SBTS0112
      MODE=IDC(3)/2+1                                                   SBTS0113
      IF(MODE.EQ.4) MODE=3                                              SBTS0114
      IF(MODE.NE.2.AND.MODE.NE.3) GO TO 20                              SBTS0115
      INPCNT=INPCNT+1                                                   SBTS0116
      TIMTAG(INPCNT)=TIMTST                                             SBTS0117
      IQ(INPCNT)=0                                                      SBTS0118
      IDSRCT=IDC(1)/4                                                   SBTS0119
      I=IDC(1)-4*IDSRCT                                                 SBTS0120
      NCOUNT=I/2                                                        SBTS0121
      IRFREQ=I-2*NCOUNT                                                 SBTS0122
      IRA=IDC(5)/4                                                      SBTS0123
      I=IDC(5)-IRA*4                                                    SBTS0124
      IRAQ=I/2                                                          SBTS0125
      IDOPOK=I-2*IRAQ                                                   SBTS0126
      IF(ISTART.EQ.0) GO TO 30                                          SBTS0127
C     IF KEYS CHANGE, A NEW DATA ARC IS FORCED                          SBTS0128
      IF(ID.EQ.IDO.AND.IDSRCT.EQ.IDSRCO.AND.NCOUNT.EQ.NCOUNO.AND.MODE.EQSBTS0129
     1.MODEO) GO TO 40                                                  SBTS0130
      INPCNT=INPCNT-1                                                   SBTS0131
      BACKSPACE 9                                                       SBTS0132
      GO TO 60                                                          SBTS0133
C     NEW DATA ARC                                                      SBTS0134
   30 ISTART=1                                                          SBTS0135
      MOAD=MODE                                                         SBTS0136
      KTAU=0                                                            SBTS0137
      IF(IDSRCT.EQ.0) KTAU=1                                            SBTS0138
      IF(KTAU.EQ.1) GO TO 301                                           SBTS0139
      TAU=77824.                                                        SBTS0140
      IF(NCOUNT.EQ.0) TAU=778240.                                       SBTS0141
C     FIND STATION ID IN BLOCK DATA                                     SBTS0142
  301 DO 31 I=1,50                                                      SBTS0143
      KSTA=I                                                            SBTS0144
      IF(ID.EQ.KODSTA(I)) GO TO 32                                      SBTS0145
   31 CONTINUE                                                          SBTS0146
      GO TO 991                                                         SBTS0147
   32 IF(NUMSTA.EQ.0) GO TO 34                                          SBTS0148
C     IS STATION NAME ALREADY IN SUMMARY DATA                           SBTS0149
```

```
      DO 33 I=1,NUMSTA                                                  SBTS0150
      KK=I                                                              SBTS0151
      IF(NAMSTA(I).EQ.STANAM(KSTA)) GO TO 35                            SBTS0152
   33 CONTINUE                                                          SBTS0153
C     NEW STATION NAME                                                  SBTS0154
   34 NUMSTA=NUMSTA+1                                                   SBTS0155
      IF(NUMSTA.GT.20) GO TO 992                                        SBTS0156
      NAMSTA(NUMSTA)=STANAM(KSTA)                                       SBTS0157
      STIMNX(NUMSTA)=TIMTAG(INPCNT)                                     SBTS0158
      GO TO 36                                                          SBTS0159
C     OLD STATION NAME                                                  SBTS0160
C     UPDATE STATION FIRST ON TIME                                      SBTS0161
   35 X=TIMTAG(INPCNT)                                                  SBTS0162
      STIMNX(KK)=AMIN1(STIMNX(KK),X)                                    SBTS0163
C     TEST FOR DISTINCT TRANSMITTING STATION                            SBTS0164
   36 IF(MODE.NE.3) GO TO 38                                            SBTS0165
      DO 37 I=1,NUMSTA                                                  SBTS0166
      IF(NAMSTA(I).EQ.PAIR(KSTA)) GO TO 38                              SBTS0167
   37 CONTINUE                                                          SBTS0168
      NUMSTA=NUMSTA+1                                                   SBTS0169
      IF(NUMSTA.GT.20) GO TO 992                                        SBTS0170
      NAMSTA(NUMSTA)=PAIR(KSTA)                                         SBTS0171
      STIMNX(NUMSTA)=1.E30                                              SBTS0172
   38 IDO=ID                                                            SBTS0173
      IDSRCO=IDSRCT                                                     SBTS0174
      NCOUNO=NCOUNT                                                     SBTS0175
      MODEO=MODE                                                        SBTS0176
      OBSNAM=STANAM(KSTA)                                               SBTS0177
      TRANAM=OBSNAM                                                     SBTS0178
      IF(MODE.EQ.3) TRANAM=PAIR(KSTA)                                   SBTS0179
      MOUNT=NALIGN(KSTA)                                                SBTS0180
      TRF=FTR(KSTA)                                                     SBTS0181
      CR1=C1(KSTA)                                                      SBTS0182
      CR2=C2(KSTA)                                                      SBTS0183
      BIASF=BIAS(KSTA)                                                  SBTS0184
      RATIO=RETR(KSTA)                                                  SBTS0185
   40 CONTINUE                                                          SBTS0186
C     LOAD ROW OF DATA ARRAY                                            SBTS0187
      IQAN=0                                                            SBTS0188
      IQRA=0                                                            SBTS0189
      IQRD=0                                                            SBTS0190
      IF(IDC(2)/2.EQ.3) GO TO 4000                                      SBTS0191
      IQRD=4                                                            SBTS0192
      IQRA=2                                                            SBTS0193
      IQAN=1                                                            SBTS0194
 4000 IF(MOD(IDC(2),2).EQ.0) IQAN=1                                     SBTS0195
      IF(KNTROL(1).NE.0) GO TO 4001                                     SBTS0196
      XANG(INPCNT)=TEST                                                 SBTS0197
      IQAN=1                                                            SBTS0198
      GO TO 410                                                         SBTS0199
 4001 ISGN=IX/131072                                                    SBTS0200
      IF(ISGN.EQ.0) GO TO 401                                           SBTS0201
      IX=IX-131072                                                      SBTS0202
      GO TO 41                                                          SBTS0203
  401 IX=-IX                                                            SBTS0204
   41 XANG(INPCNT)=FLOAT(IX)*1.19841288E-5                              SBTS0205
  410 IF(KNTROL(2).NE.0) GO TO 4002                                     SBTS0206
      YANG(INPCNT)=TEST                                                 SBTS0207
      IQAN=1                                                            SBTS0208
      GO TO 420                                                         SBTS0209
 4002 ISGN=IY/131072                                                    SBTS0210
      IF(ISGN.EQ.0) GO TO 402                                           SBTS0211
      IY=IY-131072                                                      SBTS0212
      GO TO 42                                                          SBTS0213
  402 IY=-IY                                                            SBTS0214
   42 YANG(INPCNT)=FLOAT(IY)*1.19841288E-5                              SBTS0215
  420 IF(KNTROL(3).EQ.0) GO TO 404                                      SBTS0216
      IF(IRFREQ.NE.1) GO TO 404                                         SBTS0217
   43 RU=1.048397E-3                                                    SBTS0218
      IF(IDC(4).EQ.7) RU=1.050694E-3                                    SBTS0219
      RANGE(INPCNT)=RU*RAN                                              SBTS0220
   44 IF(IRA.EQ.1) GO TO 45                                             SBTS0221
      IF(RAN.EQ.0.) GO TO 404                                           SBTS0222
      GO TO 405                                                         SBTS0223
  404 RANGE(INPCNT)=TEST                                                SBTS0224
```

```
  405 IQRA=2                                                            SBTS0225
   45 IF(KNTROL(4).EQ.0) GO TO 470                                      SBTS0226
      IRDOP=IDOP(1)/131072                                              SBTS0227
      IDOP(1)=IDOP(1)-IRDOP*131072                                      SBTS0228
      IIDOP=IDOP(1)*262144+IDOP(2)                                      SBTS0229
      IF(IDSRCT.EQ.0) GO TO 46                                          SBTS0230
      DOP(INPCNT)=FLOAT(IIDOP)*1.E-8                                    SBTS0231
      GO TO 47                                                          SBTS0232
   46 DOP(INPCNT)=IIDOP-IIDOPO                                          SBTS0233
      IIDOPO=IIDOP                                                      SBTS0234
   47 IF(IDOPOK.EQ.1) GO TO 49                                          SBTS0235
      IF(IIDOP.NE.0) GO TO 48                                           SBTS0236
  470 DOP(INPCNT)=TEST                                                  SBTS0237
   48 IQRD=4                                                            SBTS0238
   49 TXTRA(INPCNT)=TIMTAG(INPCNT)-TIMTAG(1)                            SBTS0239
      IF(IRDOP.NE.0) GO TO 490                                          SBTS0240
      IQRA=2                                                            SBTS0241
      IQRD=4                                                            SBTS0242
  490 IQ(INPCNT)=IQAN+IQRA+IQRD                                         SBTS0243
      IF(INPCNT.EQ.INPMAX) GO TO 60                                     SBTS0244
      IF(TIMTAG(INPCNT)-TIMTAG(1).GE.TMAX) GO TO 60                     SBTS0245
      IF(TIMTAG(INPCNT).GE.TFINSH) GO TO 100                            SBTS0246
      GO TO 20                                                          SBTS0247
   60 ASSIGN 20 TO JUMP                                                 SBTS0248
      ISTART=0                                                          SBTS0249
      GO TO 70                                                          SBTS0250
  100 ASSIGN 999 TO JUMP                                                SBTS0251
   70 IF(INPCNT.LE.1) GO TO 989                                         SBTS0252
C     FROM HERE TO EFN 705 IS ALL TO FIND THE MOST COMMON TIME INTERVAL SBTS0253
C     BETWEEN MEASUREMENTS.  THIS WILL BE PUT INTO DELT                 SBTS0254
      MANY=1                                                            SBTS0255
      ITEM(1)=1                                                         SBTS0256
      HOLD(1)=TIMTAG(2)-TIMTAG(1)                                       SBTS0257
      IF(INPCNT.LE.2) GO TO 704                                         SBTS0258
      DO 703 I=3,INPCNT                                                 SBTS0259
      HERE=TIMTAG(I)-TIMTAG(I-1)                                        SBTS0260
      DO 701 J=1,MANY                                                   SBTS0261
      IF(HERE.EQ.HOLD(J)) GO TO 702                                     SBTS0262
  701 CONTINUE                                                          SBTS0263
      MANY=MANY+1                                                       SBTS0264
      HOLD(MANY)=HERE                                                   SBTS0265
      ITEM(MANY)=1                                                      SBTS0266
      GO TO 703                                                         SBTS0267
  702 ITEM(J)=ITEM(J)+1                                                 SBTS0268
  703 CONTINUE                                                          SBTS0269
  704 MOST=1                                                            SBTS0270
      ISRCH=1                                                           SBTS0271
      DO 705 I=1,MANY                                                   SBTS0272
      IF(MOST.GE.ITEM(I)) GO TO 705                                     SBTS0273
      MOST=ITEM(I)                                                      SBTS0274
      ISRCH=I                                                           SBTS0275
  705 CONTINUE                                                          SBTS0276
      DELT=HOLD(ISRCH)                                                  SBTS0277
      IF(KTAU.EQ.1) TAU=DELT                                            SBTS0278
      ONTIME=TIMTAG(1)                                                  SBTS0279
C     MAKE ALL ANGLES     POSITIVE IF NECESSARY                         SBTS0280
C     BUT RETAIN CONTINUITY                                             SBTS0281
      DO 710 I=1,2                                                      SBTS0282
      DO 710 K=1,INPCNT                                                 SBTS0283
      IF(RDAT(K,I).EQ.TEST) GO TO 710                                   SBTS0284
      IF(RDAT(K,I).GE.0.) GO TO 710                                     SBTS0285
      DO 71 L=1,INPCNT                                                  SBTS0286
      IF(RDAT(L,I).EQ.TEST) GO TO 71                                    SBTS0287
      RDAT(L,I)=RDAT(L,I)+6.28318531                                    SBTS0288
   71 CONTINUE                                                          SBTS0289
  710 CONTINUE                                                          SBTS0290
C     DO POLYNOMIAL FITS, TEST FOR OUTLIERS                             SBTS0291
C     PUT DATA ON TAPE 12                                               SBTS0292
      CALL POLYFT(INPCNT)                                               SBTS0293
      TSTART=DMIN1(TSTART,TIMTAG(1))                                    SBTS0294
      TSTOP=DMAX1(TSTOP,TIMTAG(INPCNT))                                 SBTS0295
  989 INPCNT=0                                                          SBTS0296
      GO TO JUMP,(20,999)                                               SBTS0297
  991 WRITE(6,901) ID                                                   SBTS0298
      GO TO 999                                                         SBTS0299
```

```
992 WRITE(6,902)                                          SBTS0300
    NUMSTA=NUMSTA-1                                       SBTS0301
    IERR=2                                                SBTS0302
999 RETURN                                                SBTS0303
    END                                                   SBTS0304
```

Subroutine: SCANIT

Purpose: To read the final edited data tape on Unit 10 and write all the data on the System Output Tape. May be used as a separate program for reading and writing out the contents of either edited or simulated data tapes.

Calling Sequence: CALL SCANIT

Common storages used: /SUMCØM/,/ØUTCØM/,/MESCØM/

Subroutines required: DATØUP

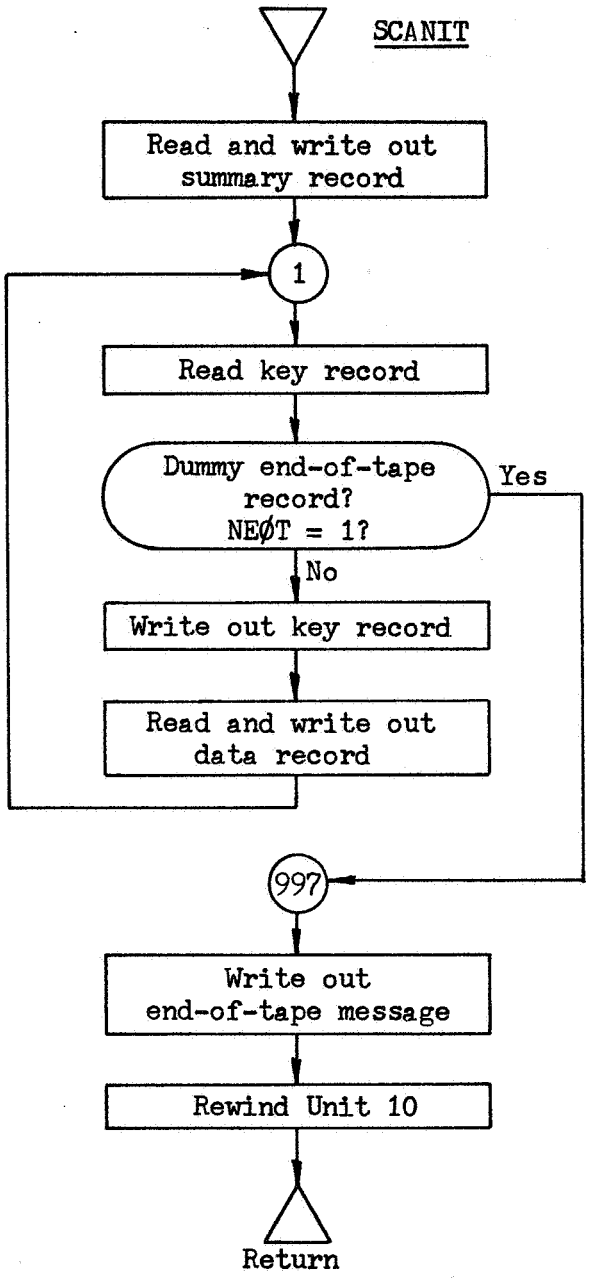
SCANIT
Read and write out summary record
1
Read key record
Dummy end-of-tape record? NEØT = 1?
Yes
No
Write out key record
Read and write out data record
997
Write out end-of-tape message
Rewind Unit 10
Return

```
$IBFTC MC134P  M94,NODD,XR3
CMC134P   PROGRAM TO READ EDITED DATA TAPE                                SCAN0001
C     THIS SUBROUTINE MAY BE USED AS A SEPARATE PROGRAM FOR               SCAN0002
C     READING EDITED OR SIMULATED DATA TAPES                              SCAN0003
C     (IT WAS ORIGINALLY WRITTEN FOR JUST THAT PURPOSE.  THAT IS WHY      SCAN0004
C     IT DUPLICATES SOME OF THE EFFORT OF SUBROUTINE EGRESS.)             SCAN0005
C     TO USE SEPARATELY, REMOVE SUBROUTINE AND RETURN CARDS               SCAN0006
C     BE SURE TO FURNISH A SUBROUTINE DATOUP                              SCAN0007
      SUBROUTINE SCANIT                                                   SCAN0008
      COMMON  /SUMCOM/SUMM(56)                                            SCAN0009
      DOUBLE PRECISION  TSTART,   TSTOP                                   SCAN0010
      DIMENSION   HEADER(11),   STIMNX(20)                                SCAN0011
      REAL        NAMSTA(20)                                              SCAN0012
      EQUIVALENCE              (SUMM(1),HEADER),     (SUMM(12),NUMSTA)    SCAN0013
     1,  (SUMM(13),NAMSTA),    (SUMM(33),TSTART),    (SUMM(35),TSTOP)     SCAN0014
     2,  (SUMM(37),STIMNX)                                                SCAN0015
      COMMON  /OUTCOM/BUFF(40)                                            SCAN0016
      DOUBLE PRECISION  ONTIME,   TFIRST,   TLAST,    TAU,      FTR      SCAN0017
     1,        CR1,      CR2,      DR,       BIAS,     RATIO,   DBUFF(10)SCAN0018
      DIMENSION   NB(4),         SSD(4)                                   SCAN0019
      EQUIVALENCE              (BUFF(1),NREC),       (BUFF(2),NEOT)       SCAN0020
     2,  (BUFF(3),OBSNAM),     (BUFF(4),TRANAM),     (BUFF(5),NRCD)       SCAN0021
     2,  (BUFF(6),NPTS),       (BUFF(7),KONT),       (BUFF(8),MTYPE)      SCAN0022
     3,  (BUFF(9),NALIGN),     (BUFF(10),MODE),      (BUFF(11),DELT)      SCAN0023
     4,  (BUFF(12),KTAU),      (BUFF(13),ONTIME),    (BUFF(15),TFIRST)    SCAN0024
     5,  (BUFF(17),TLAST),     (BUFF(19),TAU),       (BUFF(21),FTR)       SCAN0025
     6,  (BUFF(23),CR1),       (BUFF(25),CR2),       (BUFF(27),DR)        SCAN0026
     7,  (BUFF(29),BIAS),      (BUFF(31),RATIO),     (BUFF(33),NB)        SCAN0027
     8,  (BUFF(13),DBUFF),     (BUFF(37),SSD)                             SCAN0028
      COMMON  /MESCOM/DATA(85,6)                                          SCAN0029
      DIMENSION   DI(3)                                                   SCAN0030
  601 FORMAT(13H1TAPE HEADER,,11A6/10HONUMSTA = ,I2/14HOSTATION NAMES/(   SCAN0031
     16(3X,A6)))                                                          SCAN0032
  602 FORMAT(17HOSTATION ON-TIMES/(6E20.8))                               SCAN0033
  603 FORMAT(10HOTSTART = ,D23.16)                                        SCAN0034
  604 FORMAT(9HOTSTOP = ,D23.16)                                          SCAN0035
  605 FORMAT(4HO  N,4X,3HEOT,3X,6HOBSNAM,3X,6HTRANAM,3X,4HNRCD,3X,4HNPTSSCAN0036
     1,3X,6HKONTIN,3X,5HMTYPE,3X,6HNALIGN,3X,4HMODE,3X,10HMEAS. INT.,3X,SCAN0037
     24HKTAU/2I5,4X,A6,3X,A6,I6,I7,2I8,I9,I8,F12.2,I7//10X,6HONTIME,18X,SCAN0038
     36HTFIRST,19X,5HTLAST,20X,3HTAU,21X,3HFTR/5D24.16//12X,2HC1,22X,2HCSCAN0039
     42,20X,7HR. AMB.,18X,4HBIAS,20X,5HRATIO/5D24.16/                     SCAN0040
     57H NB1 = ,I2,3X,6HNB2 = ,I2,3X,6HNB3 = ,I2,3X,6HNB4 = ,I2/          SCAN0041
     620HOSTANDARD DEVIATIONS/4E20.8)                                     SCAN0042
  606 FORMAT(22HOONTIME IN DATE FORMAT)                                   SCAN0043
  607 FORMAT(22HOTFIRST IN DATE FORMAT)                                   SCAN0044
  608 FORMAT(21HOTLAST IN DATE FORMAT)                                    SCAN0045
  609 FORMAT(5HODATA/(I3,5E20.8))                                         SCAN0046
  610 FORMAT(18HOEND OF TAPE, N = ,I4,9H, NEOT = ,I2,9H, NRCD = ,I2)      SCAN0047
      READ(10) SUMM                                                       SCAN0048
      WRITE(6,601) HEADER,NUMSTA,(NAMSTA(I),I=1,NUMSTA)                   SCAN0049
      WRITE(6,602) (STIMNX(I),I=1,NUMSTA)                                 SCAN0050
      WRITE(6,603) TSTART                                                 SCAN0051
      CALL DATOUP(TSTART,DI,0)                                            SCAN0052
      WRITE(6,604) TSTOP                                                  SCAN0053
      CALL DATOUP(TSTOP,DI,0)                                             SCAN0054
    1 READ(10) BUFF                                                       SCAN0055
      IF(NEOT.EQ.1) GO TO 997                                             SCAN0056
      READ(10) DATA                                                       SCAN0057
      WRITE(6,605) (BUFF(I),I=1,12),(DBUFF(I),I=1,10),NB,SSD              SCAN0058
      WRITE(6,606)                                                        SCAN0059
      CALL DATOUP(ONTIME,DI,0)                                            SCAN0060
      WRITE(6,607)                                                        SCAN0061
      CALL DATOUP(TFIRST,DI,0)                                            SCAN0062
      WRITE(6,608)                                                        SCAN0063
      CALL DATOUP(TLAST,DI,0)                                             SCAN0064
      WRITE(6,609) ((DATA(I,J),J=1,6),I=1,NPTS)                           SCAN0065
      GO TO 1                                                             SCAN0066
  997 WRITE(6,610) NREC,NEOT,NRCD                                         SCAN0067
      REWIND 40                                                           SCAN0068
      RETURN                                                              SCAN0069
      END                                                                 SCAN0070
```

Subroutine: SETCAS

Purpose: Reads input data defining state elements and program control for a sequence of data analyses, and set up internal storage arrays. Constructs the *a priori* estimate of state and its covariance.

Calling Sequence: CALL SETCAS

Common storages used: //204 cells,/DCPCØM/,/EQMCØM/,/ESØCØM/,/ESTCØM/, /ES1CØM/

Subroutines required: BLDCØV,CØVØUT,DATINP,DATØUP,ØVRLYD

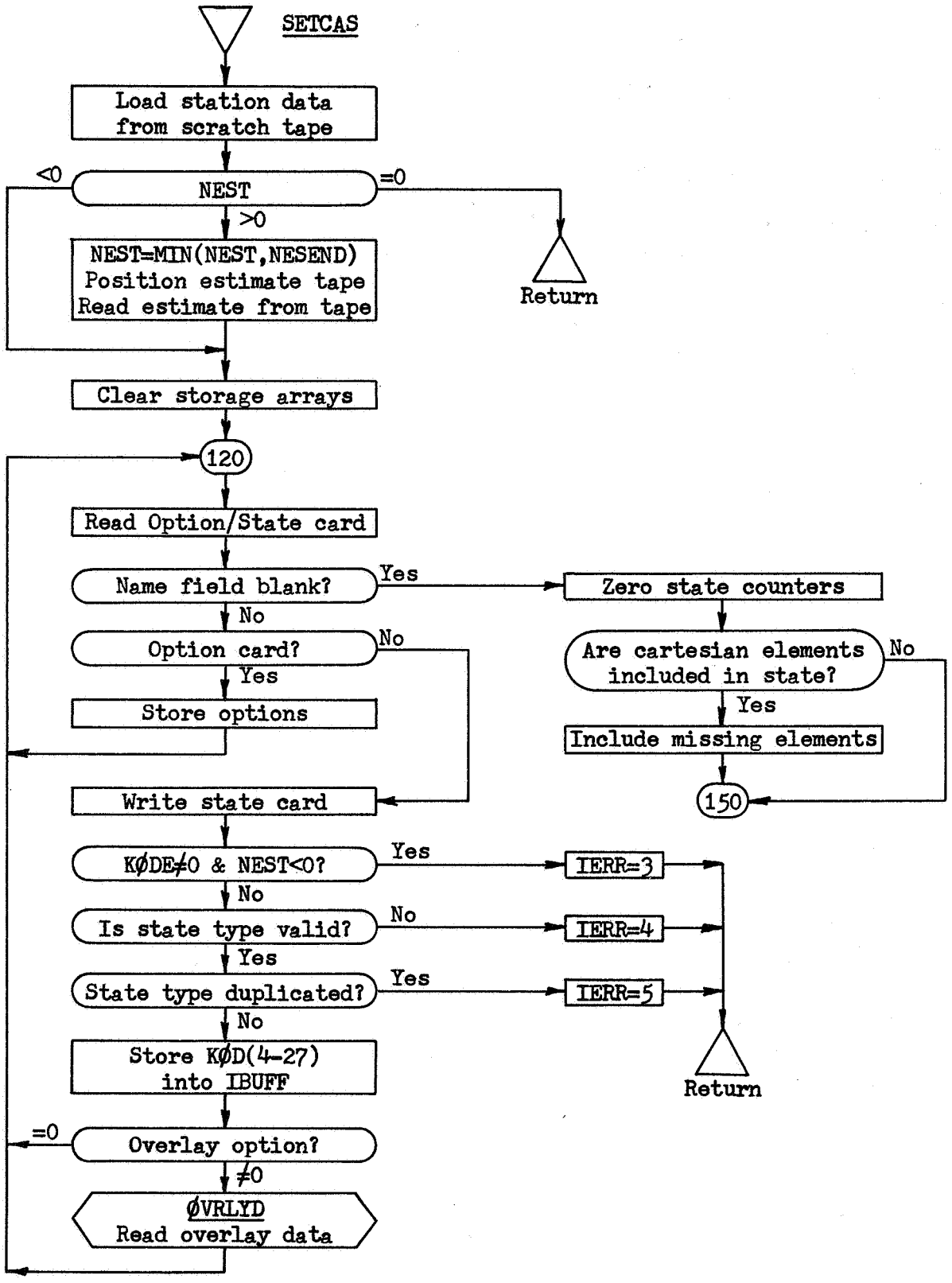
SETCAS
Load station data from scratch tape
NEST
<0
=0
>0
NEST=MIN(NEST,NESEND)
Position estimate tape
Read estimate from tape
Return
Clear storage arrays
120
Read Option/State card
Name field blank?
Yes
No
Zero state counters
Option card?
No
Yes
Are cartesian elements included in state?
No
Yes
Store options
Include missing elements
150
Write state card
KØDE≠0 & NEST<0?
Yes
IERR=3
No
Is state type valid?
No
IERR=4
Yes
State type duplicated?
Yes
IERR=5
No
Store KØD(4-27) into IBUFF
Return
=0
Overlay option?
≠0
ØVRLYD
Read overlay data

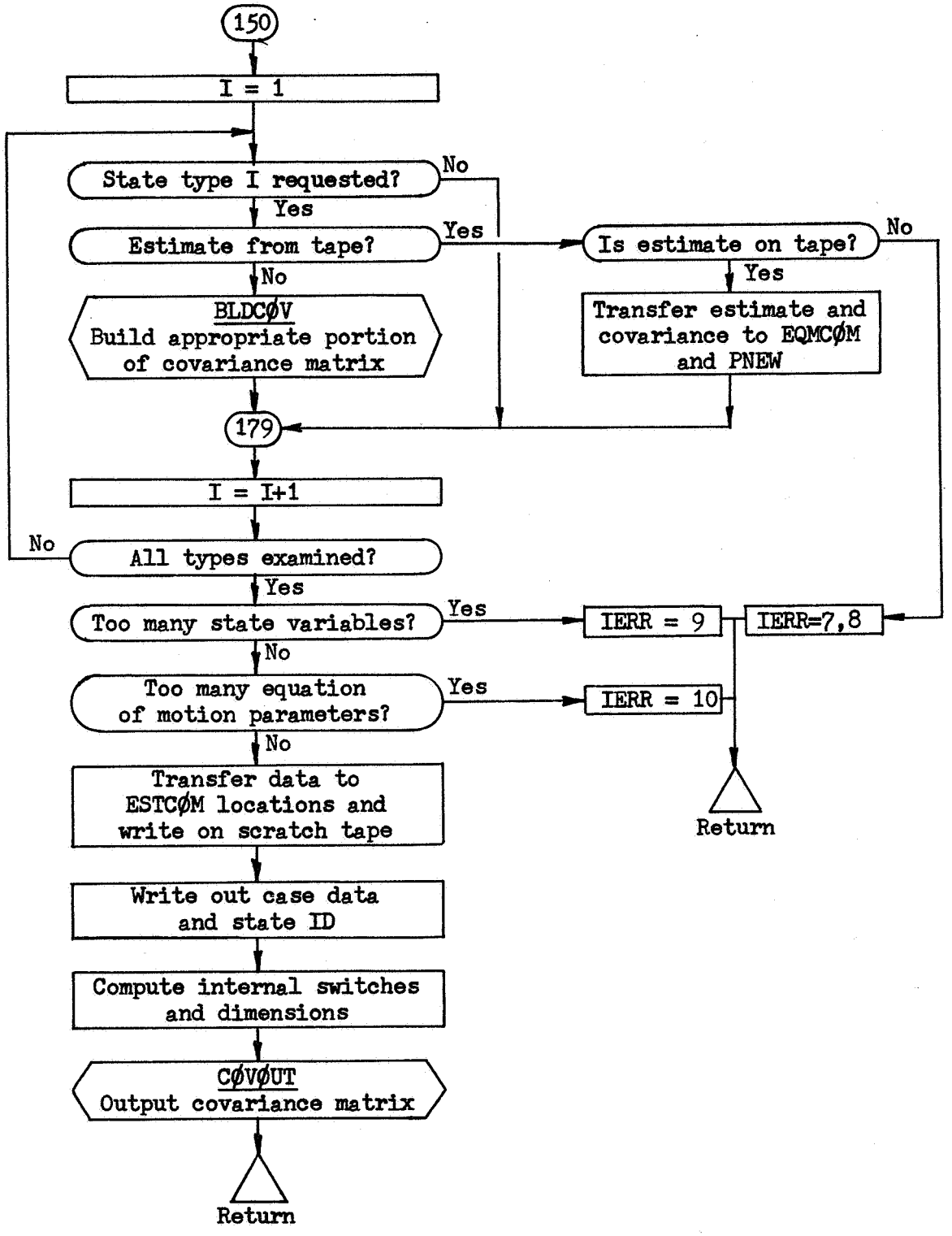
150
I = 1
State type I requested?
No
Yes
Estimate from tape?
Yes
Is estimate on tape?
No
Yes
No
BLDCØV
Build appropriate portion of covariance matrix
Transfer estimate and covariance to EQMCØM and PNEW
179
I = I+1
No
All types examined?
Yes
Too many state variables?
Yes
IERR = 9
IERR=7,8
No
Too many equation of motion parameters?
Yes
IERR = 10
No
Transfer data to ESTCØM locations and write on scratch tape
Return
Write out case data and state ID
Compute internal switches and dimensions
CØVØUT
Output covariance matrix
Return

SETCAS-3

```
$IBFTC MC13SW  XR3,M94,NODD,LIST
      SUBROUTINE SETCAS                                                 SCAS0001
C     CASE INPUT AND INITIALIZATION                                     SCAS0002
C                                                                       SCAS0003
      COMMON              /DCPCOM/CDCP(900)                             SCAS0004
      DOUBLE PRECISION    DATEV1(3)                                     SCAS0005
      DIMENSION           CBODY(8,11) ,IFEMPS( 8) ,IFPLNT(11) ,NEMP  (8) SCAS0006
     1,                   IDCP  (900) ,IFOUTP(11) ,IHM   (24)           SCAS0007
      EQUIVALENCE               (CDCP(687),IFEMPS) ,(CDCP(106),MAXQ  )  SCAS0008
     1   ,(CDCP( 17),CBODY ) ,(CDCP(676),IFOUTP) ,(CDCP(105),MAXZ  )    SCAS0009
     2   ,(CDCP(801),DATEV1) ,(CDCP(663),IFPLNT) ,(CDCP(695),NEMP  )    SCAS0010
     3   ,(CDCP(  1),IDCP  ) ,(CDCP(703),IHM   ) ,(CDCP(117),NESEND)    SCAS0011
     4   ,(CDCP(111),IERR  ) ,(CDCP(107),MAXD  ) ,(CDCP(118),NFST  )    SCAS0012
      EQUIVALENCE               (IFEMPS(7),IFDRAG) ,(IFEMPS(2),IFSOLR)  SCAS0013
     1                         ,(IFEMPS(1),IFGRAV) ,(IFEMPS(5),IFTIME)  SCAS0014
     2   ,(IFEMPS(3),IFATMD) ,(IFEMPS(6),IFHARM) ,(IFEMPS(4),IFVENT)    SCAS0015
      EQUIVALENCE               (NEMP  (7),NEMP3 ) ,(NEMP  (3),NSOLR )  SCAS0016
     1   ,(NEMP  (1),NDRAG ) ,(NEMP  (2),NHARM ) ,(NEMP  (5),NTIME )    SCAS0017
     2   ,(NEMP  (8),NEMPS ) ,(NEMP  (6),NPEND ) ,(NEMP  (4),NVENT )    SCAS0018
      EQUIVALENCE               (IFOUTP(3),ICVOUT)                      SCAS0019
      COMMON              /EQMCOM/EQMC(2214)                            SCAS0020
      DOUBLE PRECISION    SPCDAT (31),EFEDAT (83),PREDAT (15)           SCAS0021
     1                   ,DELDAT  (5),EHADAT(324),MHADAT(324)           SCAS0022
     2                   ,XHADAT(325)                                   SCAS0023
      EQUIVALENCE               (EQMC(   1),SPCDAT) ,(EQMC(  63),EFEDAT) SCAS0024
     1                         ,(EQMC( 229),PREDAT) ,(EQMC( 259),DELDAT) SCAS0025
     2   ,(EQMC( 269),EHADAT) ,(EQMC( 917),MHADAT) ,(EQMC(1565),XHADAT) SCAS0026
C                                                                       SCAS0027
      COMMON              /ESOCOM/CESO(804)                             SCAS0028
     1                         ,POLD(30,30) ,STNAMO(30) ,TRAKEO(30)     SCAS0029
     2                         ,ITRETO (30) ,ILOCO (30) ,KLOCO (54)     SCAS0030
     3                         ,NSO (12,20)                             SCAS0031
      DOUBLE PRECISION    POLD                                          SCAS0032
      INTEGER             TRAKEO                                        SCAS0033
      DIMENSION           NAMSTO(20)                                    SCAS0034
      DIMENSION           DESO(2214)                                    SCAS0035
      EQUIVALENCE         (POLD,DESO)                                   SCAS0036
      DOUBLE PRECISION    SPCDAO (6) ,EFEDAO(14) ,PREDAO (4) ,DELDAO (2) SCAS0037
     1                   ,EHADAO(24) ,MHADAO(24) ,XHADAO(24) ,SEO(14,20) SCAS0038
     2                   ,ETIMVO     ,TX2ZO(3,3)                        SCAS0039
      EQUIVALENCE                 (CESO(  1),NESPSO) ,(CESO(  2),NBYO  ) SCAS0040
     1                           ,(CESO(  3),NBDO  ) ,(CESO(  4),NBXO  ) SCAS0041
     2                           ,(CESO(  5),NBHO  ) ,(CESO(  6),NUMSTO) SCAS0042
     3       ,(CESO(  7),NAMSTO) ,(CESO( 27),KOUNTO) ,(CESO( 29),ETIMVO) SCAS0043
     4       ,(CESO( 31),TX2ZO ) ,(CESO( 49),SPCDAO) ,(CESO( 61),EFEDAO) SCAS0044
     5       ,(CESO( 89),PREDAO) ,(CESO( 97),DELDAO) ,(CESO(101),EHADAO) SCAS0045
     6       ,(CESO(149),MHADAO) ,(CESO(197),XHADAO) ,(CESO(245),SEO   ) SCAS0046
C                                                                       SCAS0047
      COMMON              /ESTCOM/CEST(804)                             SCAS0048
      DIMENSION           NAMSTA(20)                                    SCAS0049
      DOUBLE PRECISION    SPCDAN (6) ,EFEDAN(14) ,PREDAN (4) ,DELDAN (2) SCAS0050
     1                   ,EHADAN(24) ,MHADAN(24) ,XHADAN(24) ,SE (14,20) SCAS0051
     2                   ,ETIMVA     ,TX2Z (3,3)                        SCAS0052
      EQUIVALENCE                 (CEST(  1),NESPOS) ,(CEST(  2),NBY   ) SCAS0053
     1                           ,(CEST(  3),NBD   ) ,(CEST(  4),NBX   ) SCAS0054
     2                           ,(CEST(  5),NBH   ) ,(CEST(  6),NUMSTA) SCAS0055
     3       ,(CEST(  7),NAMSTA) ,(CEST( 27),KOUNTN) ,(CEST( 29),ETIMVA) SCAS0056
     4       ,(CEST( 31),TX2Z  ) ,(CEST( 49),SPCDAN) ,(CEST( 61),EFEDAN) SCAS0057
     5       ,(CEST( 89),PREDAN) ,(CEST( 97),DELDAN) ,(CEST(101),EHADAN) SCAS0058
     6       ,(CEST(149),MHADAN) ,(CEST(197),XHADAN) ,(CEST(245),SE    ) SCAS0059
C                                                                       SCAS0060
      COMMON              /ES1COM/PNEW(30,30) ,STNAMN(30) ,TRAKER(30)   SCAS0061
     1                         ,ITRETN (30) ,ILOCN (30) ,KLOCN (54)     SCAS0062
     2                         ,NSN (12,20)                             SCAS0063
      DOUBLE PRECISION    PNEW                                          SCAS0064
      INTEGER             TRAKER                                        SCAS0065
      DIMENSION           DEST(2214)                                    SCAS0066
      EQUIVALENCE         (PNEW,DEST)                                   SCAS0067
C                                                                       SCAS0068
C                                                                       SCAS0069
      COMMON              SAVE(10),DUM(3),IUSED(27),KOD(27),KODE(27)    SCAS0070
C                                                                       SCAS0071
      DOUBLE PRECISION    SEN(69,20)                                    SCAS0072
      EQUIVALENCE         (SPSEN,SEN)                                   SCAS0073
      DIMENSION           NAMOPT(5) ,IDSTAT(15) ,SPCNAM (6) ,LOCSPC (5) SCAS0074
```

```
     1                    ,NUMOPT(5) ,IBFCOL(15) ,EFENAM(14) ,LOCEFE(10)  SCAS0075
     2                    ,LOCOPT(5) ,LOCDAT (7) ,PRENAM (4) ,LOCPRE (3)  SCAS0076
     3     ,IBUFF(24,27)             ,MXST    (7) ,DFLNAM (2) ,LOCDEL (1)  SCAS0077
     4     ,SPSEN (2760)             ,IHRM    (3) ,HARNAM(24) ,LOCHAR(23)  SCAS0078
     5                                            ,STBNAM(10) ,LOCSTA (9)  SCAS0079
C                                                                          SCAS0080
      EQUIVALENCE   (BLANKS,IBLANK)                                        SCAS0081
      DATA     BLANKS/6H      /                                            SCAS0082
      DATA     HARMXX/6HHARMXX/                                            SCAS0083
C     OPTIONS                                                              SCAS0084
      DATA     NAMOPT/6HIFPLNT,6HIFEMPS,6HIFOUTP,6HKEYOUT,6HNSCTRL/        SCAS0085
      DATA     NUMOPT/ 11,  8, 11, 10, 14/                                 SCAS0086
      DATA     LOCOPT/663,687,676,761,787/                                 SCAS0087
C     STATE IDENTIFICATION                                                 SCAS0088
      DATA     IDSTAT/6HSPCRFT,6HEFEMRS,6HPRESUR,6HDFLTIM,6HHARM03         SCAS0089
     1               ,6HHARM11,6HHARM01,6HHARM02,6HHARM04,6HHARM05         SCAS0090
     2               ,6HHARM06,6HHARM07,6HHARM08,6HHARM09,6HHARM10/        SCAS0091
      DATA     IBFCOL/   1,   2,   3,   4, 305,1106, 107, 207              SCAS0092
     1               , 407, 507, 607, 707, 807, 907,1007/                  SCAS0093
      DATA     LOCDAT/   1,  63, 229, 259, 269, 917,1565/                  SCAS0094
      DATA     MXST  /   6,  11,   4,   2,  24,  24,  24/                  SCAS0095
      DATA     IHRM  /   3,  11,   0/                                      SCAS0096
C     OUTPUT NAMES                                                         SCAS0097
      DATA     SPCNAM/3HX  ,3HY  ,3HZ  ,3HXD ,3HYD ,3HZD /                 SCAS0098
      DATA     EFENAM/3HUME,3HUVE,3HUEA,3HUMA,3HUJU,3HUSA,3HUUR,3HUNE      SCAS0099
     1               ,3HUPL,3HUSU,3HUMO,3HUBA,3HAU ,3HMER/                 SCAS0100
      DATA     PRENAM/3HSPR,3HDR1,3HDR2,3HVNT/                             SCAS0101
      DATA     DELNAM/3HDT ,3HDTD/                                         SCAS0102
      DATA     HARNAM/3HJ20,3HJ30,3HJ40,3HJ50,3HJ60,3HJ70,3HJ21,3HL21      SCAS0103
     1               ,3HJ22,3HL22,3HJ31,3HL31,3HJ32,3HL32,3HJ33,3HL33      SCAS0104
     2               ,3HJ41,3HL41,3HJ42,3HL42,3HJ43,3HL43,3HJ44,3HL44/     SCAS0105
      DATA     STBNAM/3HNOR,3HEST,3HDWN,3HTM1,3HTM2,3HLIT,3HAN1,3HAN2      SCAS0106
     1               ,3HRNG,3HDOP/                                         SCAS0107
      DATA     LOCSPC/11,15,18,20,21/                                      SCAS0108
      DATA     LOCEFE/27,36,44,51,57,62,66,69,71,72/                       SCAS0109
      DATA     LOCPRE/ 7, 9,10/                                            SCAS0110
      DATA     LOCDEL/ 3/                                                  SCAS0111
      DATA     LOCHAR/ 47, 69, 90,110,129,147,164,180,195,209,222,234      SCAS0112
     1               ,245,255,264,272,279,285,290,294,297,299,300/         SCAS0113
      DATA     LOCSTA/19,27,34,40,45,49,52,54,55/                          SCAS0114
C                                                                          SCAS0115
 5101 FORMAT(2I1,A6,24I2)                                                  SCAS0116
 6102 FORMAT(22H0 KODE  IOVRLY   GROUP,24I4)                               SCAS0117
 6103 FORMAT(I4,I7,5X,A6,24I4)                                             SCAS0118
 6104 FORMAT(1H0/46X,28HPARAMETERS USED IN THIS CASE/4X,5HGROUP,3X,4HNAMSCAS0119
     1E,12X,5HVALUE,2(15X,4HNAME,12X,5HVALUE))                             SCAS0120
 6105 FORMAT(1H0,2X,A6,4X,A3,D26.16,2(7X,A3,D26.16)/(13X,A3,D26.16,7X,A3SCAS0121
     1,D26.16,7X,A3,D26.16))                                               SCAS0122
 6106 FORMAT(1H0,A6,23H IS THE CENTRAL BODY ON)                            SCAS0123
 6107 FORMAT(26H0DRAG PARAMETERS APPLY TO ,A6)                             SCAS0124
 6108 FORMAT(30H0GRAVITY TERMS BELOW APPLY TO ,A6)                         SCAS0125
 6109 FORMAT(1H0/45X,29HSTATE VARIABLES FOR THIS CASE/38X,45HNAME, TREATSCAS0126
     1MENT CODE, 0=CONSIDER, 1=SOLVE FOR/10(6X,A3,I3))                     SCAS0127
 6110 FORMAT(56X,31HMEASUREMENT STANDARD DEVIATIONS/27X,13HANGLE 1 (RAD)SCAS0128
     1,12X,13HANGLE 2 (RAD),14X,10HRANGE (KM),12X,16HDOPPLER (COUNTS)/20SCAS0129
     2X,4D25.16)                                                           SCAS0130
C                                                                          SCAS0131
C     LOAD STATION DATA                                                    SCAS0132
  100 REWIND 9                                                             SCAS0133
      READ(9) SPSEN                                                        SCAS0134
C                                                                          SCAS0135
C     POSITION ESTIMATION TAPE                                             SCAS0136
      IF(NEST) 107,999,101                                                 SCAS0137
  101 IF(NEST.GT.NESEND) NEST=NESEND                                       SCAS0138
      N=NEST-NESPOS-1                                                      SCAS0139
      IF(N) 102,106,104                                                    SCAS0140
  102 N=-N                                                                 SCAS0141
      DO 103 I=1,N                                                         SCAS0142
      BACKSPACE 12                                                         SCAS0143
  103 BACKSPACE 12                                                         SCAS0144
      GO TO 106                                                            SCAS0145
  104 DO 105 I=1,N                                                         SCAS0146
      READ(12) SKIP                                                        SCAS0147
  105 READ(12) SKIP                                                        SCAS0148
C                                                                          SCAS0149
```

```
C     READ ESTIMATE FROM TAPE                                          SCAS0150
  106 READ(12) CESO                                                    SCAS0151
      READ(12) DESO                                                    SCAS0152
      NESPOS=NESPSO                                                    SCAS0153
C                                                                      SCAS0154
C     CLEAR STORAGE ARRAYS                                             SCAS0155
  107 DO 108 I=1,MAXZ                                                  SCAS0156
      STNAMN(I)=BLANKS                                                 SCAS0157
      TRAKER(I)=IBLANK                                                 SCAS0158
      ITRETN(I)=0                                                      SCAS0159
      ILOCN(I)=0                                                       SCAS0160
      DO 108 J=1,MAXZ                                                  SCAS0161
  108 PNEW(I,J)=0.D0                                                   SCAS0162
      DO 109 I=1,12                                                    SCAS0163
      DO 109 J=1,20                                                    SCAS0164
  109 NSN(I,J)=0                                                       SCAS0165
      DO 110 I=1,27                                                    SCAS0166
      KODE(I)=0                                                        SCAS0167
      IUSED(I)=0                                                       SCAS0168
      KLOCN(I)=0                                                       SCAS0169
      KLOCN(I+27)=0                                                    SCAS0170
      DO 110 J=1,24                                                    SCAS0171
  110 IBUFF(J,I)=0                                                     SCAS0172
      NBH=0                                                            SCAS0173
      DO 111 I=1,11                                                    SCAS0174
  111 IF(IFPLNT(I).LT.0) IFPLNT(I)=1                                   SCAS0175
C                                                                      SCAS0176
C     READ OPTION AND STATE CARDS                                      SCAS0177
      ASSIGN 121 TO LLA                                                SCAS0178
  120 READ(5,5101) KOD                                                 SCAS0179
      IF(KOD(3).EQ.IBLANK) GO TO 140                                   SCAS0180
      GO TO LLA, (121,125)                                             SCAS0181
  121 DO 123 I=1,5                                                     SCAS0182
      IF(KOD(3).NE.NAMOPT(I)) GO TO 123                                SCAS0183
      N=LOCOPT(I)                                                      SCAS0184
      M=NUMOPT(I)                                                      SCAS0185
      DO 122 J=1,M                                                     SCAS0186
      IDCP(N)=KOD(J+3)                                                 SCAS0187
  122 N=N+1                                                            SCAS0188
      GO TO 120                                                        SCAS0189
  123 CONTINUE                                                         SCAS0190
      ASSIGN 125 TO LLA                                                SCAS0191
C                                                                      SCAS0192
C     INTERPRET AND STORE STATE IDENTIFICATION CARD                    SCAS0193
  125 CONTINUE                                                         SCAS0194
      WRITE(6,6102) (J,J=1,24)                                         SCAS0195
      WRITE(6,6103) KOD                                                SCAS0196
      IERR=3                                                           SCAS0197
      IF(KOD.NE.0.AND.NEST.LE.0) GO TO 999                             SCAS0198
      DO 126 I=1,15                                                    SCAS0199
      LSTA=IBFCOL(I)/100                                               SCAS0200
      KSTA=IBFCOL(I)-100*LSTA                                          SCAS0201
      IF(KOD(3).EQ.IDSTAT(I)) GO TO 128                                SCAS0202
  126 CONTINUE                                                         SCAS0203
      DO 127 I=1,NUMSTA                                                SCAS0204
      KSTA=I+7                                                         SCAS0205
      IF(KOD(3).EQ.NAMSTA(I)) GO TO 128                                SCAS0206
  127 CONTINUE                                                         SCAS0207
      IERR=4                                                           SCAS0208
      GO TO 999                                                        SCAS0209
  128 IERR=5                                                           SCAS0210
      IF(IUSED(KSTA).NE.0)    GO TO 999                                SCAS0211
      IF(KSTA.EQ.7) IHRM(3)=LSTA                                       SCAS0212
      IUSED(KSTA)=1                                                    SCAS0213
      KODE(KSTA)=KOD                                                   SCAS0214
      DO 129 I=1,24                                                    SCAS0215
  129 IBUFF(I,KSTA)=KOD(I+3)                                           SCAS0216
      IF(KOD(2).EQ.0) GO TO 120                                        SCAS0217
      IF(KSTA.GT.7) GO TO 130                                          SCAS0218
      L1=LOCDAT(KSTA)                                                  SCAS0219
      CALL OVRLYD(EQMC(L1))                                            SCAS0220
      GO TO 120                                                        SCAS0221
  130 CALL OVRLYD(SEN(1,KSTA-7))                                       SCAS0222
      GO TO 120                                                        SCAS0223
C                                                                      SCAS0224
```

```
C     INITIALIZE STATE SET-UP                                          SCAS0225
  140 CONTINUE                                                         SCAS0226
      KOUNTO=0                                                         SCAS0227
      KOUNTN=0                                                         SCAS0228
      KO=1                                                             SCAS0229
      KN=1                                                             SCAS0230
      NBY=SPCDAT(28)                                                   SCAS0231
      DO 141 I=1,3                                                     SCAS0232
  141 DUM(I)=SPCDAT(I+28)                                              SCAS0233
      CALL DATINP(DUM,ETIMVA)                                          SCAS0234
      NBD=PREDAT(15)                                                   SCAS0235
      NBX=XHADAT(325)                                                  SCAS0236
      DO 142 I=1,6                                                     SCAS0237
  142 IF(IBUFF(I,1).NE.0) GO TO 143                                    SCAS0238
      GO TO 145                                                        SCAS0239
  143 DO 144 I=1,6                                                     SCAS0240
  144 IF(IBUFF(I,1).EQ.0) IBUFF=-1                                     SCAS0241
  145 CONTINUE                                                         SCAS0242
      IERR=6                                                           SCAS0243
      DO 148 I=5,7                                                     SCAS0244
      IF(IUSED(I).EQ.0) GO TO 148                                      SCAS0245
      DO 146 J=1,24                                                    SCAS0246
  146 IF(IBUFF(J,I).NE.0) GO TO 147                                    SCAS0247
      GO TO 148                                                        SCAS0248
  147 IF(NBH.NE.0) GO TO 999                                           SCAS0249
      NBH=IHRM(I-4)                                                    SCAS0250
  148 CONTINUE                                                         SCAS0251
C                                                                      SCAS0252
C     SET UP NON-STATION PORTION OF STATE                              SCAS0253
  150 DO 179 I=1,7                                                     SCAS0254
      KHOLD=KOUNTN                                                     SCAS0255
      IF(IUSED(I).EQ.0) GO TO 179                                      SCAS0256
      IF(KODE(I).EQ.0) GO TO 170                                       SCAS0257
C                                                                      SCAS0258
C     OVERLAY EQMCOM FROM TAPE ESTIMATE                                SCAS0259
  152 L1=KOUNTO                                                        SCAS0260
      KOUNTO=KOUNTO+KLOCO(KO+1)                                        SCAS0261
      IF(KLOCO(KO)-I) 153,155,154                                      SCAS0262
  153 KO=KO+2                                                          SCAS0263
      GO TO 152                                                        SCAS0264
  155 IERR=7                                                           SCAS0265
      GO TO 999                                                        SCAS0266
  154 KLOCN(KN)=I                                                      SCAS0267
      KLOCN(KN+1)=KLOCO(KO+1)                                          SCAS0268
      KOUNTN=KOUNTN+KLOCN(KN+1)                                        SCAS0269
      IF(KOUNTN.GT.MAXZ) GO TO 189                                     SCAS0270
      MXT=MXST(I)                                                      SCAS0271
      IF(I.EQ.2) MXT=14                                                SCAS0272
      IERR=11                                                          SCAS0273
      DO 168 J=1,MXT                                                   SCAS0274
      GO TO (161,162,163,164,165,166,167) ,I                           SCAS0275
  161 SPCDAT(J)=SPCDAO(J)                                              SCAS0276
      NBY=NBO                                                          SCAS0277
      ETIMVA=ETIMVO                                                    SCAS0278
      GO TO 168                                                        SCAS0279
  162 EFEDAT(J)=EFEDAO(J)                                              SCAS0280
      GO TO 168                                                        SCAS0281
  163 PREDAT(J)=PREDAO(J)                                              SCAS0282
      NBD=NBDO                                                         SCAS0283
      GO TO 168                                                        SCAS0284
  164 DELDAT(J)=DELDAO(J)                                              SCAS0285
      GO TO 168                                                        SCAS0286
  165 FHADAT(J)=FHADAO(J)                                              SCAS0287
      GO TO 168                                                        SCAS0288
  166 MHADAT(J)=MHADAO(J)                                              SCAS0289
      GO TO 168                                                        SCAS0290
  167 XHADAT(J)=XHADAO(J)                                              SCAS0291
      IF(IHRM(3).NE.NBXO) GO TO 999                                    SCAS0292
      NBX=NBXO                                                         SCAS0293
  168 CONTINUE                                                         SCAS0294
C                                                                      SCAS0295
C     SET COVARIANCE FROM TAPE                                         SCAS0296
      NUMBER=KOUNTN-KHOLD                                              SCAS0297
      DO 169 J=1,NUMBER                                                SCAS0298
      KKJ=KHOLD+J                                                      SCAS0299
```

```
      LLJ=L1+J                                                          SCAS0300
      ILOCN(KKJ)=ILOCO(LLJ)                                             SCAS0301
      ITRETN(KKJ)=ITRETO(LLJ)                                           SCAS0302
      STNAMN(KKJ)=STNAMO(LLJ)                                           SCAS0303
      DO 169 M=1,NUMBER                                                 SCAS0304
      KKM=KHOLD+M                                                       SCAS0305
      LLM=L1+M                                                          SCAS0306
  169 PNEW(KKJ,KKM)=POLD(LLJ,LLM)                                       SCAS0307
      KN=KN+2                                                           SCAS0308
      KO=KO+2                                                           SCAS0309
      GO TO 179                                                         SCAS0310
C                                                                       SCAS0311
C     BUILD COVARIANCE FROM BLOCK DATA                                  SCAS0312
  170 NUMBER=0                                                          SCAS0313
      MXT=MXST(I)                                                       SCAS0314
      DO 171 J=1,MXT                                                    SCAS0315
      IF(IBUFF(J,I).EQ.0) GO TO 171                                     SCAS0316
      KOUNTN=KOUNTN+1                                                   SCAS0317
      IF(KOUNTN.GT.MAXZ) GO TO 189                                      SCAS0318
      ILOCN(KOUNTN)=J                                                   SCAS0319
      NUMBER=NUMBER+1                                                   SCAS0320
      IF(IBUFF(J,I).GT.0) ITRETN(KOUNTN)=1                              SCAS0321
  171 CONTINUE                                                          SCAS0322
      IF(NUMBER.EQ.0) GO TO 179                                         SCAS0323
      KLOCN(KN)=I                                                       SCAS0324
      KLOCN(KN+1)=NUMBER                                                SCAS0325
      KN=KN+2                                                           SCAS0326
      GO TO (172,173,174,175,176,177,178) ,I                            SCAS0327
  172 CALL BLDCOV (SPCDAT,SPCNAM,KHOLD,NUMBER,LOCSPC)                   SCAS0328
      GO TO 179                                                         SCAS0329
  173 CALL BLDCOV (EFEDAT,EFENAM,KHOLD,NUMBER,LOCEFE)                   SCAS0330
      GO TO 179                                                         SCAS0331
  174 CALL BLDCOV (PREDAT,PRENAM,KHOLD,NUMBER,LOCPRE)                   SCAS0332
      GO TO 179                                                         SCAS0333
  175 CALL BLDCOV (DELDAT,DELNAM,KHOLD,NUMBER,LOCDEL)                   SCAS0334
      GO TO 179                                                         SCAS0335
  176 CALL BLDCOV (EHADAT,HARNAM,KHOLD,NUMBER,LOCHAR)                   SCAS0336
      GO TO 179                                                         SCAS0337
  177 CALL BLDCOV (MHADAT,HARNAM,KHOLD,NUMBER,LOCHAR)                   SCAS0338
      GO TO 179                                                         SCAS0339
  178 CALL BLDCOV (XHADAT,HARNAM,KHOLD,NUMBER,LOCHAR)                   SCAS0340
  179 CONTINUE                                                          SCAS0341
      IERR=10                                                           SCAS0342
      L1=KOUNTN                                                         SCAS0343
      IF(KLOCN(1).EQ.1) L1=L1-6                                         SCAS0344
      IF(L1.GT.MAXQ) GO TO 999                                          SCAS0345
C                                                                       SCAS0346
C     SET UP STATION PORTION OF STATE                                   SCAS0347
  180 DO 188 I=8,27                                                     SCAS0348
      KHOLD=KOUNTN                                                      SCAS0349
      IF(IUSED(I).EQ.0) GO TO 188                                       SCAS0350
      IF(KODE(I).EQ.0) GO TO 185                                        SCAS0351
C                                                                       SCAS0352
C     OVERLAY SEN FROM TAPE                                             SCAS0353
      KSTA=NAMSTO(I-7)                                                  SCAS0354
      DO 181 J=1,NUMSTO                                                 SCAS0355
      L1=J                                                              SCAS0356
      LSTA=NAMSTO(J)                                                    SCAS0357
      IF(KSTA.EQ.LSTA) GO TO 182                                        SCAS0358
  181 CONTINUE                                                          SCAS0359
      IERR=8                                                            SCAS0360
      GO TO 999                                                         SCAS0361
  182 IF(NSO(1,L1).EQ.0) GO TO 188                                      SCAS0362
      KLOCN(KN)=I+93                                                    SCAS0363
      NSN(1,I-7)=KHOLD+1                                                SCAS0364
      NSN(2,I-7)=NSO(2,L1)                                              SCAS0365
      KLOCN(KN+1)=NSN(2,I-7)                                            SCAS0366
      DO 183 J=1,10                                                     SCAS0367
      SEN(J,I-7)=SEO(J,L1)                                              SCAS0368
      NSN(J+2,I-7)=NSO(J+2,L1)                                          SCAS0369
      IF(NSN(J+2,I-7).EQ.0) GO TO 183                                   SCAS0370
      KOUNTN=KOUNTN+1                                                   SCAS0371
      IF(KOUNTN.GT.MAXZ) GO TO 189                                      SCAS0372
      ILOCN(KOUNTN)=J                                                   SCAS0373
      STNAMN(KOUNTN)=STBNAM(J)                                          SCAS0374
```

```
      TRAKER(KOUNTN)=LSTA                                               SCAS0375
      IF(NSN(J+2,I-7).GT.0) ITRFTN(KOUNTN)=1                            SCAS0376
  183 CONTINUE                                                          SCAS0377
      KN=KN+2                                                           SCAS0378
C                                                                       SCAS0379
C     SET COVARIANCE FROM TAPE                                          SCAS0380
      NUMBER=KOUNTN-KHOLD                                               SCAS0381
      L1=NSO(1,L1)-1                                                    SCAS0382
      DO 184 J=1,NUMBER                                                 SCAS0383
      KKJ=KHOLD+J                                                       SCAS0384
      LLJ=L1+J                                                          SCAS0385
      DO 184 M=1,NUMBER                                                 SCAS0386
      KKM=KHOLD+M                                                       SCAS0387
      LLM=L1+M                                                          SCAS0388
  184 PNEW(KKJ,KKM)=POLD(LLJ,LLM)                                       SCAS0389
      GO TO 188                                                         SCAS0390
C                                                                       SCAS0391
C     BUILD COVARIANCE FROM SEN                                         SCAS0392
  185 NUMBER=0                                                          SCAS0393
      DO 186 J=1,10                                                     SCAS0394
      NSN(J+2,I-7)=IBUFF(J,I)                                           SCAS0395
      IF(IBUFF(J,I).EQ.0) GO TO 186                                     SCAS0396
      KOUNTN=KOUNTN+1                                                   SCAS0397
      IF(KOUNTN.GT.MAXZ) GO TO 189                                      SCAS0398
      ILOCN(KOUNTN)=J                                                   SCAS0399
      NUMBER=NUMBER+1                                                   SCAS0400
      TRAKER(KOUNTN)=NAMSTA(I-7)                                        SCAS0401
      IF(IBUFF(J,I).GT.0) ITRFTN(KOUNTN)=1                              SCAS0402
  186 CONTINUE                                                          SCAS0403
      IF(NUMBER.EQ.0) GO TO 188                                         SCAS0404
      KLOCN(KN)=I+93                                                    SCAS0405
      KLOCN(KN+1)=NUMBER                                                SCAS0406
      KN=KN+2                                                           SCAS0407
      NSN(1,I-7)=KHOLD+1                                                SCAS0408
      NSN(2,I-7)=NUMBER                                                 SCAS0409
      CALL BLDCOV (SEN(1,I-7),STBNAM,KHOLD,NUMBER,LOCSTA)               SCAS0410
  188 CONTINUE                                                          SCAS0411
      GO TO 200                                                         SCAS0412
  189 IERR=9                                                            SCAS0413
      GO TO 999                                                         SCAS0414
C                                                                       SCAS0415
C     LOAD A PRIORI ESTIMATE                                            SCAS0416
  200 CONTINUE                                                          SCAS0417
      DO 201 I=1,6                                                      SCAS0418
  201 SPCDAN(I)=SPCDAT(I)                                               SCAS0419
      DO 202 I=1,14                                                     SCAS0420
  202 EFEDAN(I)=EFEDAT(I)                                               SCAS0421
      DO 203 I=1,4                                                      SCAS0422
  203 PREDAN(I)=PREDAT(I)                                               SCAS0423
      DO 204 I=1,2                                                      SCAS0424
  204 DELDAN(I)=DELDAT(I)                                               SCAS0425
      DO 205 I=1,24                                                     SCAS0426
      EHADAN(I)=EHADAT(I)                                               SCAS0427
      MHADAN(I)=MHADAT(I)                                               SCAS0428
  205 XHADAN(I)=XHADAT(I)                                               SCAS0429
      DO 207 J=1,20                                                     SCAS0430
      DO 206 I=1,10                                                     SCAS0431
  206 SE(I,J)=SEN(I,J)                                                  SCAS0432
      DO 207 I=11,14                                                    SCAS0433
  207 SE(I,J)=SEN(I+55,J)                                               SCAS0434
C                                                                       SCAS0435
C     OUBPUT CASE PARAMETERS                                            SCAS0436
  210 CONTINUE                                                          SCAS0437
      WRITE(6,6104)                                                     SCAS0438
      L1=MOD(NRY,100)                                                   SCAS0439
      WRITE(6,6106) CRODY(1,L1)                                         SCAS0440
      CALL DATOUP(ETIMVA,DUM,0)                                         SCAS0441
      DO 211 I=1,3                                                      SCAS0442
  211 DATEV1(I)=DUM(I)                                                  SCAS0443
      WRITE(6,6105) IDSTAT(1),(SPCNAM(I),SPCDAN(I),I=1,6)               SCAS0444
      WRITE(6,6105) IDSTAT(2),(EFENAM(I),EFEDAN(I),I=1,14)              SCAS0445
      WRITE(6,6107) CRODY(1,NRD)                                        SCAS0446
      WRITE(6,6105) IDSTAT(3),(PRENAM(I),PREDAN(I),I=1,4)               SCAS0447
      WRITE(6,6105) IDSTAT(4),(DELNAM(I),DELDAN(I),I=1,2)               SCAS0448
      WRITE(6,6108) CRODY(1,3)                                          SCAS0449
```

```
      WRITE(6,6105) IDSTAT(5),(HARNAM(I),EHADAN(I),I=1,24)
      WRITE(6,6108) CBODY(1,11)
      WRITE(6,6105) IDSTAT(6),(HARNAM(I),MHADAN(I),I=1,24)
      IF(NBX.EQ.0) GO TO 212
      WRITE(6,6108) CBODY(1,NBX)
      WRITE(6,6105) HARMXX,(HARNAM(I),XHADAN(I),I=1,24)
  212 CONTINUE
      DO 213 J=1,NUMSTA
      WRITE(6,6105) NAMSTA(J),(STBNAM(I),SE(I,J),I=1,10)
  213 WRITE(6,6110) (SE(I,J),I=11,14)
      WRITE(6,6109) (STNAMN(I),ITRETN(I),I=1,KOUNTN)
C
C     STORE P MATRIX AND RELATED DATA ON SCRATCH TAPE
      WRITE(9) DEST
      BACKSPACE 9
C
C     SET INTERNAL DIMENSIONS AND OPTIONS
      DO 220 I=1,24
  220 IHM(I)=0
      MAXD=3*MAXQ+26
      KHARM=0
      IFAT=0
      IFT=0
      NUMBER=0
      KO=1
  221 KHOLD=NUMBER
      KKJ=KLOCN(KO)
      IF(KKJ.EQ.0.OR.KKJ.GT.7) GO TO 227
      NUMBER=NUMBER+KLOCN(KO+1)
      KKL=KHOLD+1
      DO 226 I=KKL,NUMBER
      J=ILOCN(I)
      GO TO (226,222,223,224,225,225,225) ,KKJ
  222 IFPLNT(J)=-1
      GO TO 226
  223 IF(J.EQ.1) IFSOLR=-1
      IF(J.EQ.2) IFAT=IFAT-1
      IF(J.EQ.3) IFAT=IFAT-2
      IF(J.EQ.4) IFVENT=-1
      GO TO 226
  224 IFT=IFT-J
      GO TO 226
  225 IHM(J)=1
      KHARM=KHARM+1
  226 CONTINUE
      IF(IFAT.NE.0) IFATMD=IFAT
      IF(IFT.NE.0) IFTIME=IFT
      KO=KO+2
      GO TO 221
  227 NSOLR=22
      DO 228 I=1,11
  228 IF(IFPLNT(I).LT.0) NSOLR=NSOLR+3
      NDRAG=NSOLR
      IF(IFSOLR.LT.0) NDRAG=NDRAG+3
      NVENT=NDRAG
      IF(IFATMD.EQ.-3) NVENT=NVENT+3
      IF(IFATMD.LT.0) NVENT=NVENT+3
      NTIME=NVENT
      IF(IFVENT.LT.0) NTIME=NTIME+3
      NHARM=NTIME
      IF(IFTIME.EQ.-3) NHARM=NHARM+3
      IF(IFTIME.LT.0) NHARM=NHARM+3
      NPEND=NHARM+3*KHARM
      NEMP3=NPEND-22
      NEMPS=NEMP3/3
      DO 229 I=1,3
      DO 229 J=1,3
  229 TX2Z(I,J) = 0.
      DO 230 I=1,3
  230 TX2Z(I,I) = 1.D0
C
C     OUTPUT COVARIANCE MATRIX
      IERR=0
      CALL COVOUT(KOUNTN,SPCDAN,ICVOUT)
  999 RETURN
      END
```

Subroutine: SETN

Purpose: SETN sets the logical tape numbers for input and output to conform with the system unit table.

Calling Sequence: CALL SETN (NIN,NØUT)

Input and Output

I/Ø	Symbolic Name or Location	Program Dimensions	Math Symbol	Data Dimensions or Units	Definition
Ø	NIN				Logical input tape number (5).
Ø	NØUT				Output tape number (6).

Common storages used: None

Subroutines required: None

```
$IBFTC SETN     M94,XR3,NODD
      SUBROUTINE SETN(NIN,NOUT)                                         SETN0001
      NIN=5                                                             SETN0002
      NOUT=6                                                            SETN0003
      RETURN                                                            SETN0004
      END                                                               SETN0005
```

Subroutine: SETSTA

Purpose: Used at the beginning of a run to set up arrays for up to 20 stations (for stations found on the data tape) using the station block data values (up to 50 stations may be described in block data.)

Calling Sequence: CALL SETSTA

Common storages used: //16 cells,/DCPCØM/,/ESTCØM/,/STNCØM/

Subroutines required: DATØUP,DSTAT

Discussion

Because of the vast size of the Differential Correction Program, it is necessary to restrict the size of a number of arrays. One such array pertains to tracking stations that are considered active in any one run. This is the SEN array whose dimensions are 69 X 20. Since each column corresponds to a unique station, no more than twenty stations may be considered active for any one run of the program. The actual stations to be selected as active are those stations named on either the Edited Tracking Data tape or the Simulated Tracking Data tape.

It is convenient, however, to allow the stations to be selected from a larger group of 50 possible stations. SETSTA is used at the beginning of a run to examine each station name on the list made from the data tape, find this station among the 50 in the block data, assign an internal station number k, and use block data values to load up the kth column of two working station arrays. After initialization, the working arrays are available to other parts of the program; the block data arrays are not.

The following two pairs of arrays are involved:

BLOCK DATA		BLOCK DATA	
NAME	DESCRIPTION	NAME	DESCRIPTION
STALØC d(3,50)	Station location	SN d(13,20)	Station name Body fixed position vector, local tangent plane to body-fixed transformation.
STANAM (50)	Station name		
STACØR d(69,50)	Station related biases, standard deviations, and correlations.	SEN d(69,20)	Station related biases, standard deviations, and correlations.

The list of station names to be examined has been already loaded into /ESTCØM/ by the main program.

The contents of STALØC are:

STALØC(I,J) J = 1,50

I = 1 Station latitude, degrees

2 Station longitude, degrees

3 Station altitude, degrees

and the components of SN are:

SN(I,J) J = 1, 20

I = 1	Station name	
2, 3, 4	Position vector, body-fixed, km.	
5, 6, 7	Unit North vector	Local tangent plane to body-fixed frame orthogonal transform.
8, 9, 10	Unit East vector	
11, 12, 13	Unit Down vector	

```
$IBFTC MC13SV  XR3,M94,NODD,LIST
      SUBROUTINE SETSTA                                                 SSTA0001
C     SETS UP WORKING STATION ARRAYS                                    SSTA0002
C                                                                       SSTA0003
      COMMON            /DCPCOM/CDCP(900)                               SSTA0004
      DIMENSION          CBODY(8,11),ISN(26,20)                         SSTA0005
      DOUBLE PRECISION   DTR        ,SN(13,20) ,TBEGIN ,TEND            SSTA0006
      EQUIVALENCE       (CDCP( 17),CBODY ) ,(CDCP(143),SN    )         SSTA0007
     1                 ,(CDCP(  9),DTR   ) ,(CDCP(119),TBEGIN)         SSTA0008
     2                 ,(CDCP(111),IERR  ) ,(CDCP(121),TEND  )         SSTA0009
      EQUIVALENCE       (SN,ISN)                                       SSTA0010
C                                                                       SSTA0011
      COMMON            /ESTCOM/CEST(804)                              SSTA0012
      DIMENSION          NAMSTA(20)                                    SSTA0013
      EQUIVALENCE       (CEST(  7),NAMSTA) ,(CEST(  6),NUMSTA)         SSTA0014
C                                                                       SSTA0015
      COMMON            /STNCOM/CSTN(7250)                             SSTA0016
      INTEGER            STANAM(50)                                    SSTA0017
      DOUBLE PRECISION   STACOR(69,50),STALOC(3,50)                    SSTA0018
      EQUIVALENCE       (CSTN(351),STACOR) ,(CSTN(  1),STANAM)         SSTA0019
     1                 ,(CSTN( 51),STALOC)                             SSTA0020
C                                                                       SSTA0021
      COMMON             SAVE(6),A,B,DUM(6)                            SSTA0022
      DOUBLE PRECISION   A,B                                           SSTA0023
C                                                                       SSTA0024
      DOUBLE PRECISION   SEN (69,20)                                   SSTA0025
      DIMENSION          SPSEN(2760)                                   SSTA0026
      EQUIVALENCE       (SEN,SPSEN)                                    SSTA0027
C                                                                       SSTA0028
  600 FORMAT(1H0/44X,30HSTATIONS ON TRACKING DATA TAPE//35X,4HNAME,23X  SSTA0029
     1,8HLOCATION)                                                     SSTA0030
  601 FORMAT(1H0,33X,A6,6X,8HLATITUDE,D25.16,9H  DEGREES/46X,9HLONGITUDESSTA0031
     1,D24.16,9H  DEGREES/46X,8HALTITUDE,D25.16,8H  METERS)            SSTA0032
  602 FORMAT(1H0,A6)                                                   SSTA0033
  603 FORMAT(21H0TRACKING DATA BEGINS)                                 SSTA0034
  604 FORMAT(19H TRACKING DATA ENDS)                                   SSTA0035
C                                                                       SSTA0036
    1 A = CBODY(3,3)                                                   SSTA0037
      B = CBODY(4,3)                                                   SSTA0038
      WRITE (6,600)                                                    SSTA0039
      DO 10 I=1,NUMSTA                                                 SSTA0040
      DO  3 J=1,50                                                     SSTA0041
      IF (NAMSTA(I).NE.STANAM(J)) GO TO 3                              SSTA0042
      CALL DSTAT (A,B,DTR,STALOC(1,J),SN(2,I))                         SSTA0043
      ISN(1,I) = NAMSTA(I)                                             SSTA0044
      WRITE (6,601) NAMSTA(I),(STALOC(K,J),K=1,3)                      SSTA0045
      DO  2 K=1,69                                                     SSTA0046
    2 SEN(K,I) = STACOR(K,J)                                           SSTA0047
      GO TO 10                                                         SSTA0048
    3 CONTINUE                                                         SSTA0049
      WRITE (6,602) NAMSTA(I)                                          SSTA0050
      IERR = 2                                                         SSTA0051
      GO TO 99                                                         SSTA0052
   10 CONTINUE                                                         SSTA0053
      WRITE (6,603)                                                    SSTA0054
      CALL DATOUP (TBEGIN,DUM,0)                                       SSTA0055
      WRITE (6,604)                                                    SSTA0056
      CALL DATOUP (TEND,DUM,0)                                         SSTA0057
      REWIND 9                                                         SSTA0058
      WRITE (9) SPSEN                                                  SSTA0059
   99 RETURN                                                           SSTA0060
      END
```

Subroutine: SETTAP

Purpose: Checks or writes tape headers and initializes tape positions.

Calling sequence: CALL SETTAP

Common storages used: // 11 cells, /DCPCØM/,/ESTCØM/

Subroutines required: None

Discussion:

Subroutine SETTAP reads the three tape identification cards. For each, if the tape has not been written by a previous run, the subroutine writes columns 7-72 of the card as a tape identification record. If the tape has been written previously, the tape identification record is compared with columns 7-72. Any difference will cause an immediate return with the error flag (IERR) set = 1.

For the data tape (unit 10) only, the header is always compared with the data card. The tape record contains, in addition to the 11-word header, 45 words describing the tape contents. These are retained in the arrays below

NUMSTA NAMSTA (20)	ESTCØM
TBEGIN d TEND d STIMNX (20)	DCPCØM

```
$IBFTC MC138E  XR3,M94,NODD,LIST
      SUBROUTINE SETTAP                                                 STAP0001
C     CHECKS HEADERS AND INITIALIZES TAPE POSITIONS                     STAP0002
C                                                                       STAP0003
      COMMON              /DCPCOM/CDCP(900)                             STAP0004
      DIMENSION            STIMNX(20)                                   STAP0005
      DOUBLE PRECISION     TBEGIN,TEND                                  STAP0006
      EQUIVALENCE         (CDCP(111),IERR  ) ,(CDCP(123),STIMNX)        STAP0007
     1                   ,(CDCP(117),NESEND) ,(CDCP(119),TBEGIN)        STAP0008
     2                   ,(CDCP(116),NRSEND) ,(CDCP(121),TEND  )        STAP0009
C                                                                       STAP0010
      COMMON              /ESTCOM/CEST(804)                             STAP0011
      DIMENSION            NAMSTA(20)                                   STAP0012
      EQUIVALENCE         (CEST(  7),NAMSTA) ,(CEST(  6),NUMSTA)        STAP0013
C                                                                       STAP0014
      COMMON               IHEAD(12),JHEAD(11)                          STAP0015
C                                                                       STAP0016
      DIMENSION            FMT(6),T(2,3)                                STAP0017
      DATA   FMT(1)/36H(11X,2A6,6X,5X,7HHEADER,,11A6)A6,I6,/            STAP0018
      DATA   T(1,1)/36H   DATA TAPE   NRSEND =    NESEND = /            STAP0019
C                                                                       STAP0020
  501 FORMAT(I6,11A6)                                                   STAP0021
  600 FORMAT(1H1,45X,26H*** RUN INITIALIZATION ***/1H )                 STAP0022
C                                                                       STAP0023
    1 WRITE (6,600)                                                     STAP0024
      IERR = 1                                                          STAP0025
      K = 2                                                             STAP0026
      DO 9 I=1,3                                                        STAP0027
      READ  (5,501)                 (IHEAD(J),J=1,12)                   STAP0028
      WRITE (6,FMT) T(1,I),T(2,I),(IHEAD(J),J=K,12)                     STAP0029
      GO TO (2,3,4) ,I                                                  STAP0030
C     DATA TAPE                                                         STAP0031
    2 READ  (10) JHEAD,NUMSTA,NAMSTA,TBEGIN,TEND,STIMNX                 STAP0032
      K = 1                                                             STAP0033
      FMT(2) = FMT(6)                                                   STAP0034
      GO TO 7                                                           STAP0035
C     RESIDUAL TAPE                                                     STAP0036
    3 NRSEND = IHEAD(1)                                                 STAP0037
      IF (NRSEND.NE.0)   GO TO 5                                        STAP0038
      WRITE (11) (IHEAD(J),J=2,12)                                      STAP0039
      GO TO 9                                                           STAP0040
C     ESTIMATION TAPE                                                   STAP0041
    4 NESEND = IHEAD(1)                                                 STAP0042
      IF (NESEND.NE.0)   GO TO 6                                        STAP0043
      WRITE (12) (IHEAD(J),J=2,12)                                      STAP0044
      GO TO 9                                                           STAP0045
    5 READ  (11) JHEAD                                                  STAP0046
      GO TO 7                                                           STAP0047
    6 READ  (12) JHEAD                                                  STAP0048
C     CHECK HEADERS                                                     STAP0049
    7 DO 8 J=2,12                                                       STAP0050
      IF (IHEAD(J).NE.JHEAD(J-1)) GO TO 999                             STAP0051
    8 CONTINUE                                                          STAP0052
    9 CONTINUE                                                          STAP0053
      IERR = 0                                                          STAP0054
  999 RETURN                                                            STAP0055
      END
```

Subroutine: SHIF2

Purpose: Given the state of a body or vehicle with respect to a specified body, SHIF2 returns the state with respect to any other body(s) as requested by option key KØP.

Calling Sequence: CALL SHIF2 (KØP,NØR,DATE,X,NBØD,XØUT)

Input and Output

I/Ø	Symbolic Name or Location	Program Dimensions	Math Symbol	Data Dimensions or Units	Definition
I	KØP				Option key.
I	NØR				Central body number.
I	DATE	(2)		days	Whole and fractional days from 1950 Jan 0.0
I	X	(6)		km, km/sec	Vehicle state with respect to NØR equator and equinox of 1950.0
I	NBØD				Any body number.
Ø	XØUT	(6,10)		km, km/sec	Requested state(s) KØP=1: state of all bodies wrt NØR KØP=2: vehicle state wrt all bodies KØP=3: NBØD state wrt NØR in column NBØD KØP=4: vehicle state wrt NBØD in column NBØD.

Common storages used: /INPCØM/,/WCØM/

Subroutines required: ANTR, STEPT, FNØRM

Procedure

Bodies are identified by the following numbers

1	Earth	6	Saturn
2	Moon	7	Jupiter
3	Sun	8	Extra body 1 with body center NØX(1)
4	Venus	9	Extra body 2 with body center NØX(2)
5	Mars	10	Extra body 3 with body center NØX(3)

The procedure used depends upon the quantities requested and the bodies involved. The relative positions of bodies one through seven are obtained from a call of ANTR (the subroutine which reads and interprets an ephemeris tape). Subroutine STEPT is used to obtain the relative positions of bodies whose ephemerides are not stored on tape. The required quantities are obtained by combining the relevant vectors.

It should be noted that NØR may be any body (1 to 10), but if NØR is an extra body (8, 9, or 10), then that body's orbit must be described with respect to the usual bodies (1-7). When an extra body is the central body of another central body, it must have the smaller extra body number. NBØD is not required unless KØP is 3 or 4; when used it may be any body, 1-10.

```
$IBFTC MC13S2  NOREF,M94,NODD,XR3
CMC13S2  SHIF2  CALLS STEPT FOR XTRA BODIES , SCOTTY LINK
      SUBROUTINE SHIF2(KOP,NOR,DATE,X,NBOD,XOUT)
      COMMON/INPCOM/C(700)/WCOM/IW(550),CW(1450)
      DIMENSION    DATE(2),  X(6),     XOUT(6,10),    PO(21)
     1,            VE(21),   TX(2,3),  RX(3,3),       VX(3,3)
     2,            NOX(3),   SHFC(18)
      EQUIVALENCE  (C(6),SPMSD)
     1,            (IW(4),NOX),    (IW(7),IXTRA)
     2,            (CW(1),RX),     (CW(10),VX),    (CW(19),TX)
     3,            (CW(1372),SHFC)
C     BODIES ARE   1 EARTH
C                  2 MOON
C                  3 SUN
C                  4 VENUS
C                  5 MARS
C                  6 SATURN
C                  7 JUPITER
C                  8 EXTRA BODY 1 GIVEN WRT BODY NOX(1)
C                  9 EXTRA BODY 2                NOX(2)
C                 10 EXTRA BODY 3                NOX(3)
C     NOR IS THE CENTRAL BODY NUMBER, X IS VEHICLE STATE WRT NOR
C     KOP OPTIONS  1 XOUT IS STATE OF ALL BODIES WRT NOR
C                  2 XOUT IS VEHICLE STATE WRT ALL BODIES
C                  3 XOUT(I,NBOD) IS NBOD STATE WRT NOR
C                  4 XOUT(I,NBOD) IS VEHICLE STATE WRT NBOD (ONLY)
      NSTP=1
      LXT = 0
      IF(NOR.LT.8) GO TO 10
      LXT = NOR-7
      NSAV= NOR
      NOR=NOX(LXT)
   10 IF(KOP.GT.2) GO TO 20
      I1=1
      I2=7
   11 CALL ANTR1(DATE,DATE(2),NOR-1,PO,1,VE,FNORM(X))
      DO 13 I=I1,I2
      JJ=3*I-3
      DO 13 J=1,3
      KK=JJ+J
      XOUT(J,I)=PO(KK)
   13 XOUT(J+3,I)=VE(KK)
      GO TO(14,120),NSTP
14    CONTINUE
      IF(IXTRA.GT.0) GO TO 90
      GO TO 120
   20 I1=NBOD
      I2=NBOD
      IF(NBOD.GT.7) GO TO 90
      IF(LXT.NE.0) GO TO 11
      IF(NOR.NE.3.OR.NBOD.EQ.2) GO TO 11
      NSTP=2
      GO TO 11
   90 I2 = 10
      DO 210 J=1,IXTRA
      MM=J+7
      L=NOX(J)
      KK=6*J-5
      TT=(DATE - TX(1,J) + DATE(2) - TX(2,J))*SPMSD
      CALL STEPT(TT,RX(1,J),VX(1,J),XOUT(1,MM),XOUT(4,MM),SHFC(KK))
      IF(NOR.EQ.L) GO TO 210
      IF(L.GT.7.OR.KOP.LT.3) GO TO 100
      IF(NBOD.LT.8) GO TO 101
      CALL ANTR1(DATE,DATE(2),NOR-1,PO,1,VE,FNORM(X))
  101 JJ=3*L -3
      DO 105 K=1,3
      KK=JJ+K
      XOUT(K,L)=PO(KK)
  105 XOUT(K+3,L)=VE(KK)
  100 DO 110 I=1,6
  110 XOUT(I,MM) = XOUT(I,MM) + XOUT(I,L)
  210 CONTINUE
      IF(LXT.EQ.0) GO TO 120
      NOR = NSAV
      DO 211 I=I1,I2
```

```
      DO 211 J=1,6                                                      SHI20750
  211 XOUT(J,I) = XOUT(J,I) - XOUT(J,NSAV)                              SHI20760
  120 GO TO (150,130,150,130),KOP                                       SHI20770
  130 DO 140 I=I1,I2                                                    SHI20780
      DO 140 J=1,6                                                      SHI20790
  140 XOUT(J,I)=X(J)-XOUT(J,I)                                          SHI20800
  150 RETURN                                                            SHI20810
      END                                                               SHI20820
```

Subroutine: SKDØUT

Purpose: To write out the measurement schedule. SKDØUT serves principally as a driver for ØYAL.

Calling Sequence: CALL SKDØUT

Common storages used: /INPCØM/,/WCØM/

Subroutines required: ØYAL

```
$IBFTC MC13KD  NOREF,M94,NODD,XR3
CMC13KD  SKDOUT   BLDP TYPE MEASUREMENT BUILDUP AND OUTPUT                SKD00001
      SUBROUTINE SKDOUT                                                   SKD00002
      COMMON/INPCOM/C(700)/WCOM/IW(550),CW(1450)                          SKD00003
      DIMENSION    ISC(12),   IS(11,12),                    S(23,12)       SKD00004
     1,            IBC(10),   IB(36),                      B(91)          SKD00005
     2,            IEMP(24),                               OB(18)         SKD00006
     3,            IOBR(4),                                EMP(24)        SKD00007
     5,                       BODC(10,8)                                  SKD00008
     6,            DNAM(6),   IOBA(3,6),      REFS(3)                     SKD00009
      DIMENSION    EQNA(3,24)                                             SKD00010
      DIMENSION    TYPNAM(4),  MOUNT(3)                                   SKD00011
      EQUIVALENCE  (C(4),RTD),      (C(7),RSPMSD),      (C(11),BODC)      SKD00012
     1,            (C(200),S),      (C(476),B),         (C(567),OB)       SKD00013
     2,            (C(585),EMP)                                           SKD00014
      EQUIVALENCE  (IW(8),ISC),     (IW(20),IBC),       (IW(30),IEMP)     SKD00015
     1,            (IW(54),IOBR),   (IW(58),IOBA)                        SKD00016
     2,                             (IW(180),IS),       (IW(312),IB)      SKD00017
      EQUIVALENCE  (CW(1157),REFS)                                        SKD00018
      DATA (DNAM(J),J=1,6)/4HNONE,6HSUBTEN,6HRA-REF,6HDECREF,6HSEXTIP,    SKD00019
     16HSEXTOP/                                                           SKD00020
      DATA RTS/.20626481E6/                                               SKD00021
      DATA TYPNAM/6HC-BAND,6HGODDRD,6H USBS ,6H DSIF /                    SKD00022
      DATA MOUNT/6H 30-FT,6H 85-FT,1H /                                   SKD00023
      DATA (EQNA(1,J),J=1,12)/                                            SKD00024
     118HASTRO UNIT KM/AU  ,                                              SKD00025
     218HEARTH M FRAC/SUN  ,                                              SKD00026
     318HMOON  M FRAC/SUN  ,                                              SKD00027
     418HVENUS M FRAC/SUN  ,                                              SKD00028
     518HMARS  M FRAC/SUN  ,                                              SKD00029
     618HJUPTR M FRAC/SUN  ,                                              SKD00030
     718HSATRN M FRAC/SUN  ,                                              SKD00031
     818HMRCRY M FRAC/SUN  ,                                              SKD00032
     918H2ND ZONAL HARM    ,                                              SKD00033
     118H3RD ZONAL HARM    ,                                              SKD00034
     218H4TH ZONAL HARM    ,                                              SKD00035
     318H5TH ZONAL HARM    /                                              SKD00036
      DATA(EQNA(1,J),J=13,24)/                                            SKD00037
     418H1ST LONG HARM RAD ,                                              SKD00038
     518H2ND LONG HARM RAD ,                                              SKD00039
     618H3RD LONG HARM RAD ,                                              SKD00040
     718H4TH LONG HARM RAD ,                                              SKD00041
     818H1ST LUNAR KM**2   ,                                              SKD00042
     918H2ND LUNAR KM**2   ,                                              SKD00043
     118H3RD LUNAR KM**2   ,                                              SKD00044
     218H1ST DRAG   1/(KM) ,                                              SKD00045
     318H2ND DRAG   1/(KM) ,                                              SKD00046
     418HSOLAR RAD K**3/S*S,                                              SKD00047
     518HVENT. THR. KM/SEC ,                                              SKD00048
     618HSPEED LGT ERROR   /                                              SKD00049
      IF(ISC) 30,30,20                                                    SKD00050
20    WRITE(   6,101)                                                     SKD00051
  101 FORMAT(1H0,41X,38H*** EARTH-BASED TRACKING IN EFFECT ***/7H NUMBERSKD00052
     1,4X,4HNAME,6X,4HTYPE,18X,8HLOCATION,38X,8HOBSERVES)                 SKD00053
      DO 28 I=1,12                                                        SKD00054
      ISTAT=ISC(I)                                                        SKD00055
      IF(ISTAT)30,30,21                                                   SKD00056
   21 CONTINUE                                                            SKD00057
      SLAT=S(3,ISTAT)*RTD                                                 SKD00058
      SLON=S(4,ISTAT)*RTD                                                 SKD00059
      AH=S(6,ISTAT)*RTD                                                   SKD00060
      SALT=S(5,ISTAT)*1000.                                               SKD00061
      EM=S(7,ISTAT)*RTD                                                   SKD00062
      MTYPE=IS(1,ISTAT)                                                   SKD00063
      NALIGN=3                                                            SKD00064
      IF(MTYPE.EQ.3) NALIGN=IS(10,ISTAT)                                  SKD00065
      WRITE(6,102) ISTAT,S(1,ISTAT),TYPNAM(MTYPE),SLAT,S(2,ISTAT),MOUNT(SKD00066
     1NALIGN),SLON,AH,SALT,EM                                             SKD00067
  102 FORMAT(1H0,2X,I2,6X,A6,3X,A6,9X,11HLATITUDE  =,F10.5,4H DEG,16X,15SKD00068
     1HAT INTERVALS OF,F9.2,4H SEC/20X,A6, 9X,11HLONGITUDE =,F10.5,4H DESKD00069
     2G,16X,23HWHEN ELEVATION IS ABOVE,F7.2,4H DEG/35X,11HALTITUDE  =,F1SKD00070
     30.5,4H MET,16X,13HBUT LESS THAN,F7.2,4H DEG)                        SKD00071
      IF(MTYPE.EQ.1) GO TO 1020                                           SKD00072
      FTR=S(22,ISTAT)*1.E-6                                               SKD00073
      OMG3=S(20,ISTAT)*1.E-6                                              SKD00074
```

```
      TAU=S(23,ISTAT)                                                   SKD00075
      OMG4=S(21,ISTAT)                                                  SKD00076
      WRITE(6,1021) FTR,OMG3,TAU,OMG4                                   SKD00077
 1021 FORMAT(1H0,28X,18HDOPPLER PARAMETERS/31X,22HTRANSMISSION FREQUENCYSKD00078
     1,9X,F11.5,15H MEGACYCLES/SEC/31X,14HBIAS FREQUENCY,20X,F8.5,15H MESKD00079
     2GACYCLES/SEC/31X,14HCOUNT INTERVAL,20X,F8.5,8H SECONDS/31X,20HRETRSKD00080
     3ANSMISSION RATIO,15X,F7.5)                                        SKD00081
 1020 WRITE(6,103)                                                      SKD00082
  103 FORMAT(1H0,28X,25HMEASUREMENT ERROR SOURCES,11X,6HRANDOM,9X,4HBIASSKD00083
     1)                                                                 SKD00084
      DO 27 J=2,9                                                       SKD00085
      IF(IS(J,ISTAT).EQ.0) GO TO 27                                     SKD00086
      CALL  OYAL(1,IS(1,ISTAT),J,S(1,ISTAT)      )                      SKD00087
   27 CONTINUE                                                          SKD00088
   28 CONTINUE                                                          SKD00089
   30 CONTINUE                                                          SKD00090
      IF(IBC.EQ.0) GO TO 40                                             SKD00091
      NBD=IB(36)                                                        SKD00092
      WRITE(   6,104)                                                   SKD00093
  104 FORMAT(1H0,47X,27H*** BEACON MEASUREMENTS ***/29X,12HMEASUREMENTS,SKD00094
     124X,6HRANDOM, 9X,4HBIAS,13X,23HOBSERVATION PERIOD(SEC))           SKD00095
      DO 391 I=31,35                                                    SKD00096
      J=I-30                                                            SKD00097
      CALL  OYAL(2,IB(31),J,B(81)      )                                SKD00098
  391 CONTINUE                                                          SKD00099
      WRITE(   6,105)                                                   SKD00100
  105 FORMAT(1H0, 48X,26H*** BEACONS CONSIDERED ***/7H NUMBER,6X,4HNAME,SKD00101
     122X,8HLOCATION,20X,20HLOCATION UNCERTAINTY,14X,4HBIAS)            SKD00102
      DO 36 I=1,10                                                      SKD00103
      IBEAC=IBC(I)                                                      SKD00104
      IF(IBEAC) 40,40,31                                                SKD00105
   31 CONTINUE                                                          SKD00106
      NBEAC=3*(IBEAC-1)                                                 SKD00107
      K=8*(IBEAC-1)+1                                                   SKD00108
      SLAT=B(K+1)*RTD                                                   SKD00109
      SLON=B(K+2)*RTD                                                   SKD00110
      SALT=B(K+3)*1000.                                                 SKD00111
      AH  =B(K+4)*RTD                                                   SKD00112
      BLAT=      B(K+5) *1000.                                          SKD00113
      BLON=      B(K+6) *1000.                                          SKD00114
      BALT=      B(K+7) *1000.                                          SKD00115
      IF(IB(NBEAC+1).EQ.0) BLAT=0.                                      SKD00116
      IF(IB(NBEAC+2).EQ.0) BLON=0.                                      SKD00117
      IF(IB(NBEAC+3).EQ.0) BALT=0.                                      SKD00118
      WRITE(   6,106) IBEAC,B(K),SLAT,BLAT,SLON,BLON,SALT,BALT,AH       SKD00119
  106 FORMAT(1H0,2X,I2,8X,A6,12X,11HLATITUDE  =,F10.5,4H DEG,11X,21HBEACSKD00120
     1ON NORTHING (MET),13X,F10.5/31X,11HLONGITUDE =,F10.5,4H DEG,11X,  SKD00121
     221HBEACON EASTING  (MET),13X,F10.5/31X,11HALTITUDE  =,F10.5,4H METSKD00122
     3,11X,21HBEACON ALTITUDE (MET),13X,F10.5/31X,11HHORIZON   =,F10.5, SKD00123
     44H DEG,F10.5)                                                     SKD00124
   36 CONTINUE                                                          SKD00125
   40 CONTINUE                                                          SKD00126
      IF(IOBR .LE.0) GO TO 549                                          SKD00127
      NOB = IOBR                                                        SKD00128
      WRITE(   6,113) BODC(NOB,1),OB(6),OB(7)                           SKD00129
 113  FORMAT(1H0,12X,17H***RADAR MEAS TO ,A6,1X,16HIN EFFECT BELOW ,E15.SKD00130
     18,1X,22HKM ALT, OBSERVED EVERY,F9.0,9H SECS*** )                  SKD00131
      IF(IOBR(2) .EQ.0) GO TO 545                                       SKD00132
      A =      OB(1)  * 1000.                                           SKD00133
      BB=     OB(3) *1000.                                              SKD00134
      IF(IOBR(2).EQ.2) BB=0.                                            SKD00135
      WRITE (   6,114) A,BB                                             SKD00136
 114  FORMAT(21H HEIGHT (RANDOM) M    ,E15.8/8X,6H(BIAS),7X,E15.8)      SKD00137
 545  IF(IOBR(3) .EQ. 0)GO TO 546                                       SKD00138
      A =      OB(2) *1000.                                             SKD00139
      BB=     OB(4) *1000.                                              SKD00140
      IF(IOBR(3).EQ.2) BB=0.                                            SKD00141
      WRITE (   6,115) A,BB                                             SKD00142
 115  FORMAT(24H HEIGHT RT.(RANDOM) M/S ,E15.8/ 11X,6H(BIAS),7X,E15.8)  SKD00143
 546  IF(IOBR(4) .EQ.0) GO TO 549                                       SKD00144
      WRITE(6,116) OB(5)                                                SKD00145
 116  FORMAT( 7H TBIAS ,E15.8, 4H SEC)                                  SKD00146
 549  CONTINUE                                                          SKD00147
      IF(IOBA .LE. 0) GO TO 580                                         SKD00148
C     REFS=REFERENCE VECTOR FOR ONBOARD OPTICAL OBSERVATIONS            SKD00149
```

```
      SD=SIN(OB(16))                                                    SKD00150
      CD=COS(OB(16))                                                    SKD00151
      SR=SIN(OB(15))                                                    SKD00152
      CR=COS(OB(15))                                                    SKD00153
      REFS(1)=CD*CR                                                     SKD00154
      REFS(2)=CD*SR                                                     SKD00155
      REFS(3)=SD                                                        SKD00156
      WRITE (    6,107)                                                 SKD00157
107   FORMAT(1H0,39X,40H***OPTICAL ONBOARD TRACKING IN EFFECT***)       SKD00158
      PER=OB(14)*RSPMSD                                                 SKD00159
      TBIAS=      OB(5)                                                 SKD00160
      IF(IOBR(4) .EQ.0) TBIAS =0.                                       SKD00161
      RA = OB(15)*RTD                                                   SKD00162
      DEC= OB(16)*RTD                                                   SKD00163
      WRITE(    6,108) PER,TBIAS,RA,DEC                                 SKD00164
108   FORMAT(7H0PERIOD,E17.8,5H DAYS/7H  TBIAS,E17.8,4H SEC/7H REFRA.,  SKD00165
     1E17.8,4H DEG/7H REFDEC,E17.8,4H DEG)                              SKD00166
      WRITE(    6,109)                                                  SKD00167
109   FORMAT(1H0,20X,76HRANDOM ERROR MODEL = (K1)**2+(K2**2)*(2.*ASIN(RASKD00168
     1DIUS BODY/RANGE TO BODY))**2/8X,4HBODY,11X,12HNO. OF MEAS.,12X,4HTSKD00169
     2YPE,15X,6HK1 SEC,11X, 2HK2)                                       SKD00170
      DO 575 I=1,6                                                      SKD00171
      IF(IOBA(1,I) .EQ. 0) GO TO 580                                    SKD00172
      NB = IOBA(3,I)                                                    SKD00173
      IT = IOBA(2,I)                                                    SKD00174
      KK = IT+1                                                         SKD00175
      IF (KK .GT. 3) KK=KK+1                                            SKD00176
      GO TO (550,555,560,565,560,565),KK                                SKD00177
550   A=0.                                                              SKD00178
      BB=0.                                                             SKD00179
      GO TO 570                                                         SKD00180
555   A=RTS*      OB(12)                                                SKD00181
      BB=      OB(13)                                                   SKD00182
      GO TO 570                                                         SKD00183
560   A=RTS*      OB(8)                                                 SKD00184
      BB=      OB(9)                                                    SKD00185
      GO TO 570                                                         SKD00186
565   A=RTS*      OB(10)                                                SKD00187
      BB=      OB(11)                                                   SKD00188
570   WRITE (    6,110) BODC(NB,1),IOBA(1,I),IT,A,BB                    SKD00189
110   FORMAT(4X,A6,2I20,5X,2E20.8)                                      SKD00190
      KK = KK+1                                                         SKD00191
      IF(KK .EQ. 4) GO TO 565                                           SKD00192
575   CONTINUE                                                          SKD00193
580   CONTINUE                                                          SKD00194
      K=0                                                               SKD00195
      DO 590 I=1,24                                                     SKD00196
      IF(IEMP(I)) 585,590,585                                           SKD00197
585   IF(K.GT.0) GO TO 586                                              SKD00198
      K=1                                                               SKD00199
      WRITE (    6,111)                                                 SKD00200
586   WRITE (    6,112) (EQNA(J,I),J=1,3),EMP(I)                        SKD00201
590   CONTINUE                                                          SKD00202
111   FORMAT(1H0,42X,35H***OTHER DET. UNKNOWNS IN EFFECT***)            SKD00203
112   FORMAT(1H ,3A6,2X,E15.8)                                          SKD00204
      CALL LOCAT                                                        SKD00205
      RETURN                                                            SKD00206
      END                                                               SKD00207
```

Subroutine: SKDUL

Purpose: Reads control times. Reads and writes measurement schedule.

Calling Sequence: CALL SKDUL (INITS,NCH)

Input and Output

I/Ø	Symbolic Name or Location	Program Dimensions	Math Symbol	Data Dimensions or Units	Definition
I	INITS				Initialization key. Set -1 on first entry to initialize, internally reset to 0.
Ø	NCH				NCH=111 indicates end of run; NCH=0 indicates change in TSTART and TSTØP only.

Common storages used: /INPCØM/,/WCØM/,/BUFCØM/

Subroutines required: CARDIN, ERRØUT, SKDØUT, TIMED, TIMES

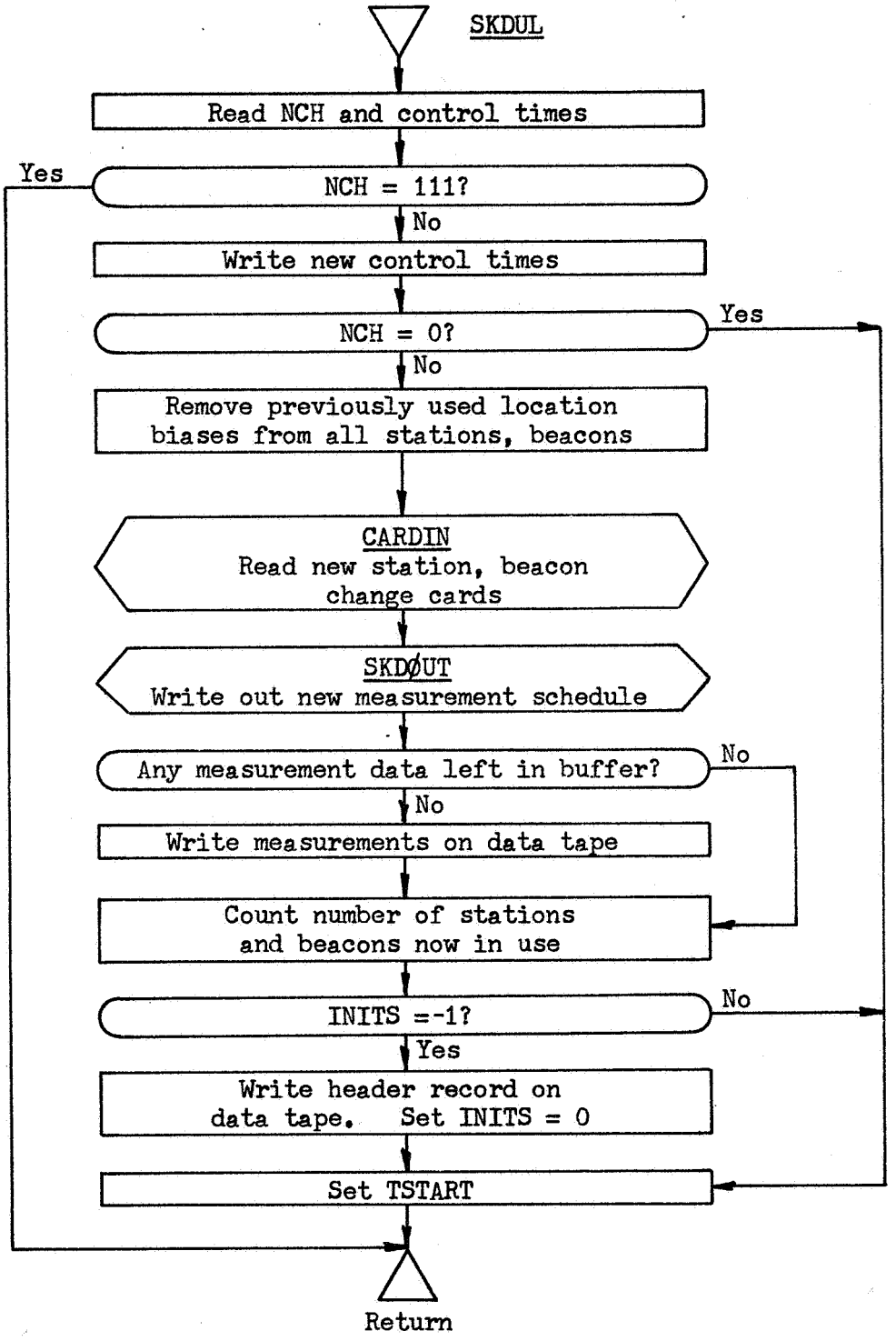
SKDUL
Read NCH and control times
Yes
NCH = 111?
No
Write new control times
NCH = 0?
Yes
No
Remove previously used location biases from all stations, beacons
CARDIN
Read new station, beacon change cards
SKDØUT
Write out new measurement schedule
Any measurement data left in buffer?
No
No
Write measurements on data tape
Count number of stations and beacons now in use
INITS =-1?
No
Yes
Write header record on data tape. Set INITS = 0
Set TSTART
Return

```
$IBFTC MC13UL  M94,NODD,XR3
CMC13UL  SKDUL  READS CONTROL TIMES, READS AND WRITES MEAS SCHEDULE      SKDL0001
      SUBROUTINE SKDUL(INITS,NCH)                                        SKDL0002
      COMMON/INPCOM/C(700)/WCOM/IW(550),CW(1450)                         SKDL0003
      COMMON  /BUFCOM/BUFF1(40) ,KEY                                     SKDL0004
      DOUBLE PRECISION  DBUFF(10)                                        SKDL0005
      DOUBLE PRECISION  ONTM,     TFST,     TLST,     TAU,      FTR      SKDL0006
     1,                 C1,       C2,       RAMB,     BIAS,     OMG4     SKDL0007
      EQUIVALENCE  (BUFF1(1),IKY),   (BUFF1(2),KEE),   (BUFF1(3),STANAM)SKDL0008
     1,            (BUFF1(4),STNAM1),(BUFF1(5),NRCD),  (BUFF1(6),NKOUNT)SKDL0009
     2,            (BUFF1(7),KONTIN),(BUFF1(8),MTYPE), (BUFF1(9),NALIGN)SKDL0010
     3,            (BUFF1(10),MODE), (BUFF1(11),FMS),  (BUFF1(12),KTAU) SKDL0011
     4,            (BUFF1(13),DBUFF,ONTM)                               SKDL0012
      EQUIVALENCE  (DBUFF(2),TFST),  (DBUFF(3),TLST),  (DBUFF(4),TAU)   SKDL0013
     1,            (DBUFF(5),FTR),   (DBUFF(6),C1),    (DBUFF(7),C2)    SKDL0014
     2,            (DBUFF(8),RAMB),  (DBUFF(9),BIAS),  (DBUFF(10),OMG4) SKDL0015
      DIMENSION   STNM(20),    TI(3)                                     SKDL0016
      DIMENSION    TFORM(6), TST(2),   TWT(2),   ONAME(2)               SKDL0017
      DIMENSION     S(23,12), B(8,10),  ISC(12),  IBC(10)               SKDL0018
     1,              IS(11,12),    IB(3,12),       BIASL(3,22)          SKDL0019
      DIMENSION  ISEM(5,13),  XMES(5, 85)                               SKDL0020
      DIMENSION   HEAD(24),     STIMNX(20)                              SKDL0021
      EQUIVALENCE   (C(200),S),          (C(476),B),          (IW(8),ISC) SKDL0022
     1,             (IW(20),IBC),        (IW(180),IS),        (IW(312),IB)SKDL0023
     2,       (CW(156),BIASL),   (CW(522),XMES),       (CW(1160),TI)    SKDL0024
     3,            (CW(1140),TSEC),(CW(1178),TSTART), (CW(1188),TWT)   SKDL0025
      EQUIVALENCE  (C(6),SPMSD),     (CW(1179),FLTIM), (CW(1172),TSECO) SKDL0026
      EQUIVALENCE  (C(675),HEAD)                                        SKDL0027
      EQUIVALENCE  (C(7),RSPMSD),    (C(115),XTROUT)                    SKDL0028
      DOUBLE PRECISION  TSTDP,TSPDP                                     SKDL0029
      DIMENSION   TYPE(4)                                               SKDL0030
      DATA TYPE/6HC-BAND,6HGODDRD,6HS-BAND,6H DSIF /                    SKDL0031
      DATA QYES,QNO/3HYES,2HNO/                                         SKDL0032
C  SUBRS REQUIRED                                                       SKDL0033
C     TIME - TIMES, TIMED                                               SKDL0034
C     ERROUT                                                            SKDL0035
C     CARDIN                                                            SKDL0036
C     SKDOUT                                                            SKDL0037
      DATA (ONAME(J),J=1,2) /6H START, 6H  STOP/                        SKDL0038
      DATA IQUAL/0/                                                     SKDL0039
      CALL TIMES(TSEC,D,TFORM)                                          SKDL0040
      READ(  5,706) NCH,TST                                             SKDL0041
706   FORMAT(I3,1E12.8,  3X,1E12.8)                                     SKDL0042
      IF(NCH .EQ. 111) GO TO 230                                        SKDL0043
      WRITE (   6,707) TFORM                                            SKDL0044
707   FORMAT(21HONEW CONTROL TIMES AT,6A6)                              SKDL0045
      DO 21 I=1,2                                                       SKDL0046
      CALL TIMED(TST(I),TWT(I))                                         SKDL0047
      CALL TIMES(TWT(I),D,TFORM)                                        SKDL0048
21    WRITE(   6,708) ONAME(I),TFORM                                    SKDL0049
708   FORMAT(1H ,1A6, 1X,6A6)                                           SKDL0050
      IF(TWT(1).GT.TWT(2))                  CALL ERROUT(1,31H(17HOERROR ISKDL0051
     1N INPUT  2E20.8,I4),TWT(1),TWT(2),NCH)                            SKDL0052
      IF(NCH .EQ. 0) GO TO 22                                           SKDL0053
      IF(INITS.EQ.-1) GO TO 50                                          SKDL0054
      DO 10 I=1,12                                                      SKDL0055
      K=ISC(I)                                                          SKDL0056
      IF(K) 11,11,1                                                     SKDL0057
    1 DO 10 J=6,8                                                       SKDL0058
      IF(IS(J,K)) 2,10,2                                                SKDL0059
    2 L=J-3                                                             SKDL0060
      M=J-5                                                             SKDL0061
      S(L,K)=S(L,K)-BIASL(M,K)                                          SKDL0062
10    CONTINUE                                                          SKDL0063
   11 DO 20 I=1,10                                                      SKDL0064
      K=IBC(I)                                                          SKDL0065
      IF(K) 50,50,12                                                    SKDL0066
12    DO 20 J=1,3                                                       SKDL0067
      IF(IB(J,K)) 13,20,13                                              SKDL0068
13    L=J+1                                                             SKDL0069
      B(L,K)=B(L,K)-BIASL(J,K+12)                                       SKDL0070
20    CONTINUE                                                          SKDL0071
50    CONTINUE                                                          SKDL0072
      CALL CARDIN(INITS)                                                SKDL0073
      CALL SKDOUT                                                       SKDL0074
```

```
      IF(IKY.EQ.0) GO TO 61                                             SKDL0075
      WRITE(12) BUFF1                                                   SKDL0076
      WRITE(12) (IQUAL,I=1,85),((XMES(I,J),J=1,85),I=1,5)               SKDL0077
C***  CHECK BINARY OUTPUT                                               SKDL0078
      QOUT=QNO                                                          SKDL0079
      IF(KONTIN.EQ.1) QOUT=QYES                                         SKDL0080
      WRITE(6,601) IKY,STANAM,STNAM1,TYPE(MTYPE),QOUT,TFST              SKDL0081
  601 FORMAT(//24H ***  RECORD PAIR NUMBER,I5//75H RECEIVING STATION   TSKDL0082
     1RANSMITTING STATION   MEASUREMENT TYPE   CONTINUATION/7X,A6,15X,A6SKDL0083
     2,15X,A6,12X,A3//12H DATA BEGINS,D24.16,20H SECONDS FROM 1950.0)   SKDL0084
      TEMP=(TFST -.5364576D9)*RSPMSD                                    SKDL0085
      CALL TFRAC(6209.,TEMP,XO1,XO2)                                    SKDL0086
      CALL DATOUT(XO1,XO2,YO1,YO2,0)                                    SKDL0087
      WRITE(6,602) TLST                                                 SKDL0088
  602 FORMAT(12H0 DATA ENDS ,D24.16,20H SECONDS FROM 1950.0)            SKDL0089
      TEMP=(TLST -.5364576D9)*RSPMSD                                    SKDL0090
      CALL TFRAC(6209.,TEMP,XO1,XO2)                                    SKDL0091
      CALL DATOUT(XO1,XO2,YO1,YO2,0)                                    SKDL0092
      WRITE(6,606) NKOUNT                                               SKDL0093
  606 FORMAT(12H0TIME POINTS/I7)                                        SKDL0094
      IF(XTROUT.EQ.0.) GO TO 61                                         SKDL0095
      WRITE(6,607) KEE,NRCD,NALIGN,MODE,FMS,KTAU,ONTM, (DBUFF(I),I=4,10)SKDL0096
     1,(IQUAL,(XMES(I,J),I=1,5),J=1,NKOUNT)                             SKDL0097
  607 FORMAT(5H0NEOT,3X,4HNRCD,3X,6HNALIGN,3X,4HMODE,7X,8HMEAS INT,6X   SKDL0098
     1,4HKTAU,11X,6HONTIME,22X,3HTAU/I4,I7,2I8,E19.8,I6,D27.16,D26.16// SKDL0099
     213X,3HFTR,23X,2HC1,24X,2HC2,24X,2HDR/4D26.16//12X,4HBIAS,21X,5HRATSKDL0100
     3IO/2D26.16//3H IQ,11X,4HTIME,15X,5HANG 1,15X,5HANG 2,15X,5HRANGE, SKDL0101
     414X,7HDOPPLER/(I3,5E20.8))                                        SKDL0102
C***  END BINARY OUTPUT                                                 SKDL0103
61    CONTINUE                                                          SKDL0104
      DO 60 I=1,5                                                       SKDL0105
      DO 60 J=1,13                                                      SKDL0106
60    ISEM(I,J)=0                                                       SKDL0107
      NSTA=0                                                            SKDL0108
      DO 62 J=1,12                                                      SKDL0109
      L=ISC(J)                                                          SKDL0110
      IF(L.EQ.0) GO TO 63                                               SKDL0111
      NSTA=NSTA+1                                                       SKDL0112
      STNM(J)=S(1,L)                                                    SKDL0113
      ISEM(1,L)=IS(1,L)                                                 SKDL0114
      DO 62 I=2,5                                                       SKDL0115
62    IF(IS(I,L).NE.0) ISEM(I,L)=1                                      SKDL0116
63    NBEA=0                                                            SKDL0117
      IF(IBC.EQ.0) GO TO 80                                             SKDL0118
      DO 64 I=1,10                                                      SKDL0119
      IF(IBC(I).EQ.0) GO TO 65                                          SKDL0120
64    NBEA=NBEA+1                                                       SKDL0121
65    DO 66 I=1,4                                                       SKDL0122
66    IF(IB(I,11).NE.0) ISEM(I,13)=1                                    SKDL0123
      ISEM(5,13)=IB(3,12)                                               SKDL0124
80    CONTINUE                                                          SKDL0125
      KEY=2                                                             SKDL0126
      IF(NCH.LT.0) KEY=-2                                               SKDL0127
      IF(INITS.EQ.0) GO TO 22                                           SKDL0128
      TSTDP=(TI(1)+TI(2))*SPMSD+TWT(1)-TSECO                            SKDL0129
      TSPDP=TSTDP+FLTIM-TWT(1)                                          SKDL0130
      DO 81 I=1,20                                                      SKDL0131
   81 STIMNX(I)=TSTDP                                                   SKDL0132
      WRITE(12) (HEAD(I),I=13,23),NSTA,STNM,TSTDP,TSPDP,STIMNX          SKDL0133
C***  CHECK BINARY OUTPUT                                               SKDL0134
      WRITE(6,603) (HEAD(I),I=13,23),TSTDP                              SKDL0135
  603 FORMAT(1H1,45X,29H***  SIMULATED DATA TAPE  ***/8H HEADER,11A6/   SKDL0136
     119H0FIRST DATA ON TAPE,D23.16,20H SECONDS FROM 1950.0)            SKDL0137
      TEMP=(TSTDP-.5364576D9)*RSPMSD                                    SKDL0138
      CALL TFRAC(6209.,TEMP,XO1,XO2)                                    SKDL0139
      CALL DATOUT(XO1,XO2,YO1,YO2,0)                                    SKDL0140
      WRITE(6,604) TSPDP                                                SKDL0141
  604 FORMAT(19H0 LAST DATA ON TAPE,D23.16,20H SECONDS FROM 1950.0)     SKDL0142
      TEMP=(TSPDP-.5364576D9)*RSPMSD                                    SKDL0143
      CALL TFRAC(6209.,TEMP,XO1,XO2)                                    SKDL0144
      CALL DATOUT(XO1,XO2,YO1,YO2,0)                                    SKDL0145
      WRITE(6,605) (STNM(I),STIMNX(I),I=1,NSTA)                         SKDL0146
  605 FORMAT(1H0,51X,16HSTATIONS ON TAPE/49X,4HNAME,5X,13HFIRST ON TIME/SKDL0147
     1/(48X,A6,E18.8))                                                  SKDL0148
C***  END BINARY OUTPUT                                                 SKDL0149
```

```
      INITS = 0                                                 SKDL0150
22    CONTINUE                                                  SKDL0151
      TSTART = TWT(1)                                           SKDL0152
230   RETURN                                                    SKDL0153
      END                                                       SKDL0154
```

Subroutine: SMEAS

Purpose: Makes a set of station measurements, RMEAS(2-5), at time RMEAS(1).

Calling Sequence: CALL SMEAS (SA,BRAD,XØUT,RMEAS,ISA)

Input and Output

I/Ø	Symbolic Name or Location	Program Dimensions	Math Symbol	Data Dimensions or Units	Definition
I	SA	(23)			Appropriate column of station data array, S.
I	BRAD	(3)			1 - Earth semi-major axis 2 - Earth semi-minor axis 3 - Earth spin rate.
I	XØUT	(6,10)			Vehicle position, velocity with respect to all bodies.
Ø	RMEAS	(5)			1 - Time 2 - Angle 1 3 - Angle 2 4 - Range 5 - Doppler
I	ISA	(11)			Station measurement treatment keys.

Common storages used: /INPCØM/,/WCØM/,/EXIC/

Subroutines required: ARKTNS,CRØSS,ERRØUT,EXINST,FNØRM,SHIF2,STAT, TFRAC,VTRN,VTRT

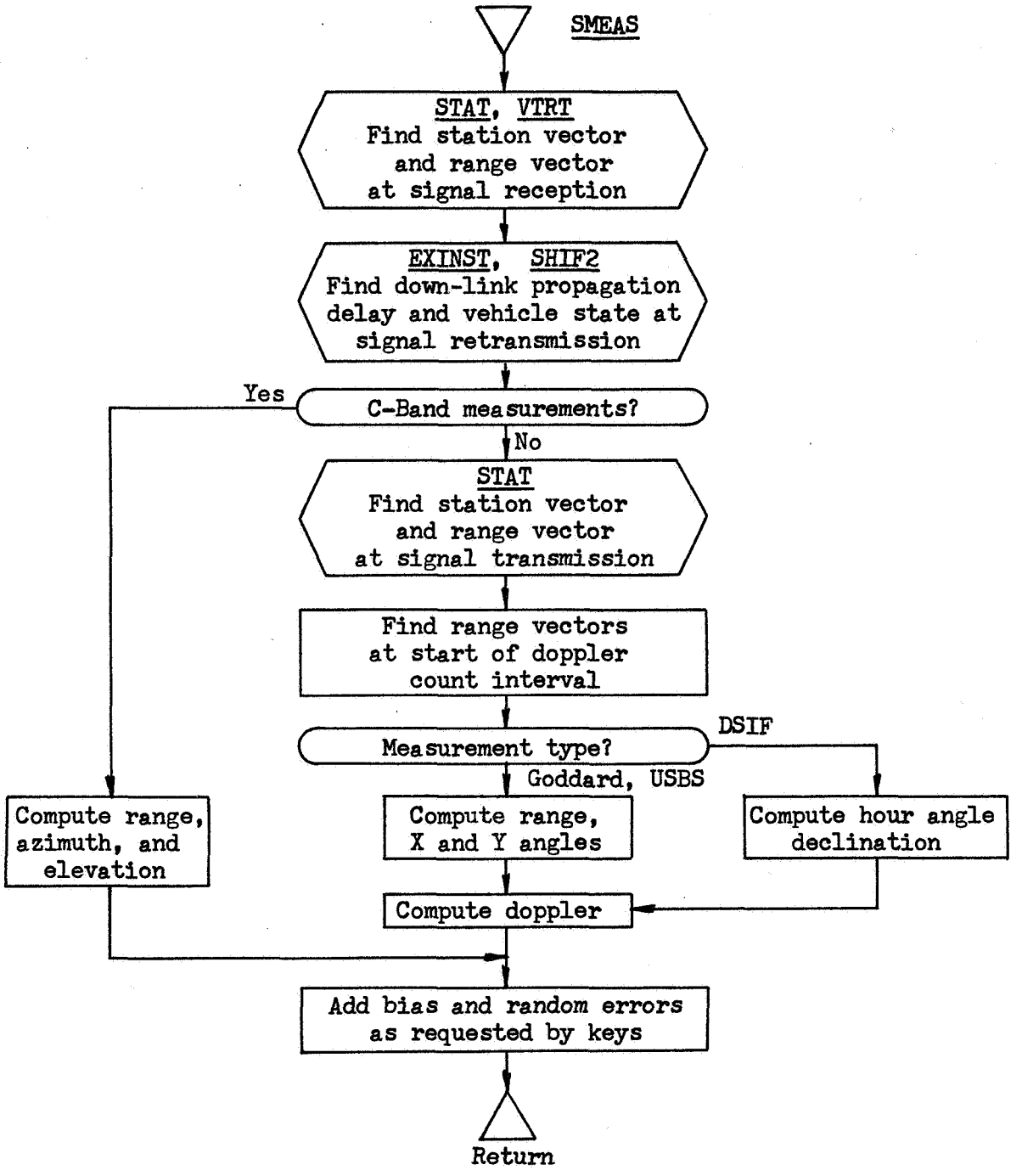
SMEAS
STAT, VTRT
Find station vector
and range vector
at signal reception
EXINST, SHIF2
Find down-link propagation
delay and vehicle state at
signal retransmission
Yes
C-Band measurements?
No
STAT
Find station vector
and range vector
at signal transmission
Find range vectors
at start of doppler
count interval
DSIF
Measurement type?
Goddard, USBS
Compute range,
azimuth, and
elevation
Compute range,
X and Y angles
Compute hour angle
declination
Compute doppler
Add bias and random errors
as requested by keys
Return

```
$IBFTC MC13SM  NOREF,M94,NODD,XR3
CMC13SM   COMPUTES STATION MEASUREMENTS, RMEAS(2-5), AT T=RMEAS(1)
      SUBROUTINE SMEAS(SA,BRAD,XOUT,RMEAS,ISA)
      COMMON/INPCOM/C(700)/WCOM/IW(550),CW(1450)/EXIC/W(36),CRX(9,2)
      DIMENSION   AN(3,3),       BRAD(3),       CROB(3),       DCXSOB(3)
     1,           DNOB(3),       DNTR(3),       DUM(3),        EAOB(3)
     2,           EATR(3),       ENOB(3),       ENTR(3),       EK(3)
     3,           ISA(11),       KRX(9,2),      OMG(3),        R(4)
     4,           RMEAS(5),      RTOB(3),       RTTR(3),       SA(23)
     5,           SCEK(3),       SCOB(5),                      SXOB(3)
     6,           SXTR(3),       TI(2),         TIX(2),        TMOB(9)
     7,           TMTR(9),       X(6),          XIN(6),        XOUT(6,10)
     8,           XSOB(6),       XSOBX(3),      XSTR(6),       XSTRX(3)
      DIMENSION   TMOBX(9),      DUM1(3),       DUM2(3),       XX(3)
     1,           RTMG(2),       EDOT(2),       RM(2),         E(2)
     2,           DELTE(2),      DR(2),         DRX(2),        Z1(6)
     3,           DCXSTR(3)
      EQUIVALENCE  (C(116),CFRAC1),  (C(117),CFRAC2)
      EQUIVALENCE  (C(7),RSPMSD),    (C(9),SPDLT),      (IW(382),NOR)
     1,            (IW(489),ITRIG),  (IW(490),KOUNT)
     2,                              (CW(1140),TSEC),   (CW(1160),TI)
     3,            (CW(1163),AN),    (CW(1172),TSECO),  (CW(1173),GHAR)
     4,            (CRX,KRX),        (R(1),ANG1),       (R(2),ANG2)
     5,            (SXOB(1),XTNOB),  (SXOB(2),XTEOB),   (SXOB(3),XTDOB)
     6,            (SXTR(1),XTNTR),  (SXTR(2),XTETR),   (SXTR(3),XTDTR)
     7,            (TMOB(1),ENOB),   (TMOB(4),EAOB),    (TMOB(7),DNOB)
     8,            (TMTR(1),ENTR),   (TMTR(4),EATR),    (TMTR(7),DNTR)
      EQUIVALENCE  (RM(1),RATOB),    (RM(2),RATTR)
      DOUBLE PRECISION  TWR
      DATA    OMG,EK/5*0.,1./
      MTYPE=ISA(1)
      NALIGN=ISA(10)
      NFRAC=ISA(11)
      TIX(1)=TI(1)
      TIX(2)=TI(2)
      RMEAS(1)=TSEC
      OMG(3)=BRAD(3)
C     RECEIVING STATION POSITION AT END OF COUNT INTERVAL
      GHAN=GHAR+BRAD(3)*(TSEC-TSECO)
      CALL STAT(SA(3),GHAN,TMOB,RTOB,SCOB,BRAD)
      SPHI=SCOB(1)
      CPHI=SCOB(2)
      RTMG(1)=FNORM(RTOB)
C     DOWN-LINK PROPAGATION DELAY
      CALL VTRN(AN,XOUT,X)
      DO 10 I=1,3
   10 XSOB(I)=X(I)-RTOB(I)
      RATOB=FNORM(XSOB)
      ITERAT=0
      TSET=TSEC
   20 ITERAT=ITERAT+1
      TV=TSEC-RATOB/SPDLT
      TWR=TV
      M=1
      N=3
   30 CONTINUE
      CALL EXINST(TWR,M,N,XIN,XIN(4),W,CRX,10,ITRIG,KOUNT)
      IF(M.LE.0) CALL ERROUT(1,10H(4H0M1=I2),M)
      IF(N) 50,40,60
   40 CONTINUE
      CALL ERROUT(1,28H(23H0ERROR ON BIN TAPE READ))
   50 CONTINUE
      N=-N
      NOR=KRX(7,N)
      GO TO 30
   60 CONTINUE
      CALL TFRAC(TIX(1),TIX(2)+(TV-TSET)*RSPMSD,TIX(1),TIX(2))
      TSET=TV
      CALL SHIF2(2,NOR,TIX,XIN,1,XOUT)
      CALL VTRN(AN,XOUT,X)
      DO 70 I=1,3
   70 XSOB(I)=X(I)-RTOB(I)
      R2OB=DOT(XSOB,XSOB)
      RATOB=SQRT(R2OB)
      IF(ITERAT.EQ.1) GO TO 20
```

```
      CALL CROSS(OMG,RTOB,DUM)                                          SMES0075
      CALL VTRN(AN,XOUT(4,1),X(4))                                      SMES0076
      DO 80 I=4,6                                                       SMES0077
   80 XSOB(I)=X(I)-DUM(I-3)                                             SMES0078
      CALL VTRT(TMOB,XSOB,SXOB)                                         SMES0079
C     WE NOW HAVE DOWN-LINK RANGE AND ASSOCIATED VECTORS, END OF COUNT  SMES0080
      IF(MTYPE.EQ.1) GO TO 131                                          SMES0081
C     NOW WE GET DOWN-LINK VECTORS AT BEGINNING OF COUNT INTERVAL       SMES0082
      GHAX=GHAR+BRAD(3)*(TSEC-TSECO-SA(23))                             SMES0083
      CALL STAT(SA(3),GHAX,TMOBX,RTOB,SCOB,BRAD)                        SMES0084
      TWR=TSEC-SA(23)                                                   SMES0085
      M=1                                                               SMES0086
      N=3                                                               SMES0087
   81 CONTINUE                                                          SMES0088
      CALL EXINST(TWR,M,N,XIN,XIN(4),W,CRX,10,ITRIG,KOUNT)              SMES0089
      IF(M.LE.0) CALL ERROUT(1,10H(4HOM1=I2),M)                         SMES0090
      IF(N) 83,82,84                                                    SMES0091
   82 CONTINUE                                                          SMES0092
      CALL ERROUT(1,28H(13HOERROR ON BIN TAPE READ))                    SMES0093
   83 CONTINUE                                                          SMES0094
      N=-N                                                              SMES0095
      NOR=KRX(7,N)                                                      SMES0096
      GO TO 81                                                          SMES0097
   84 CONTINUE                                                          SMES0098
      CALL TFRAC(TI(1),TI(2)-SA(23)*RSPMSD,TIX(1),TIX(2))               SMES0099
      CALL SHIF2(2,NOR,TIX,XIN,1,XOUT)                                  SMES0100
      CALL VTRN(AN,XOUT,XX)                                             SMES0101
      DO 85 I=1,3                                                       SMES0102
   85 XSOBX(I)=XX(I)-RTOB (I)                                           SMES0103
      RATOBX=FNORM(XSOBX)                                               SMES0104
C     WE NOW HAVE RV(TV), RV(TV-TAU), AND ASSOCIATED VECTORS            SMES0105
C     NOW WE GET RT(TTR), RT(TTR-TAU),AND ASSOCIATED VECTORS            SMES0106
C     FIRST, UP-LINK VECTORS AT END OF COUNT                            SMES0107
C     UP-LINK PROPAGATION DELAY                                         SMES0108
      TTR=TV-RATOB/SPDLT                                                SMES0109
      GHAX=GHAR+BRAD(3)*(TTR-TSECO)                                     SMES0110
      CALL STAT(SA(3),GHAX,TMTR,RTTR,SCOB,BRAD)                         SMES0111
      DO 90 I=1,3                                                       SMES0112
   90 XSTR(I)=X(I)-RTTR(I)                                              SMES0113
      RATTR=FNORM(XSTR)                                                 SMES0114
      ITERAT=0                                                          SMES0115
  100 ITERAT=ITERAT+1                                                   SMES0116
      TTR=TV-RATTR/SPDLT                                                SMES0117
      GHAX=GHAR+BRAD(3)*(TTR-TSECO)                                     SMES0118
      CALL STAT(SA(3),GHAX,TMTR,RTTR,SCOB,BRAD)                         SMES0119
      DO 110 I=1,3                                                      SMES0120
  110 XSTR(I)=X(I)-RTTR(I)                                              SMES0121
      R2TR=DOT(XSTR,XSTR)                                               SMES0122
      RATTR=SQRT(R2TR)                                                  SMES0123
      IF(ITERAT.EQ.1) GO TO 100                                         SMES0124
      RTMG(2)=FNORM(RTTR)                                               SMES0125
      CALL CROSS(OMG,RTTR,DUM)                                          SMES0126
      DO 120 I=4,6                                                      SMES0127
  120 XSTR(I)=X(I)-DUM(I-3)                                             SMES0128
      CALL VTRT(TMTR,XSTR,SXTR)                                         SMES0129
C     NOW WE GET UP-LINK VECTORS AT BEGINNING OF COUNT INTERVAL         SMES0130
      GHAX=GHAX-BRAD(3)*SA(23)                                          SMES0131
      CALL STAT(SA(3),GHAX,TMOBX,RTOB,SCOB,BRAD)                        SMES0132
      DO 130 I=1,3                                                      SMES0133
  130 XSTRX(I)=XX(I)-RTOB (I)                                           SMES0134
      RATTRX=FNORM(XSTRX)                                               SMES0135
C     COMPUTE AZIMUTH AND ELEVATION FOR C-BAND OR REFRACTION            SMES0136
  131 E(1)=ATAN(-XTDOB/SQRT(XTNOB*XTNOB+XTEOB*XTEOB))                   SMES0137
      AZ=ARKTNS(360,XTNOB,XTEOB)                                        SMES0138
      IF(NFRAC.EQ.2) GO TO 139                                          SMES0139
      JJ=1                                                              SMES0140
      IF(MTYPE.EQ.1) GO TO 132                                          SMES0141
      JJ=2                                                              SMES0142
      E(2)=ATAN(-XTDTR/SQRT(XTNTR*XTNTR+XTETR*XTETR))                   SMES0143
C     HERE WE COMPUTE RANGE AND ELEVATION REFRACTION CORRECTION         SMES0144
  132 DO 138 I=1,JJ                                                     SMES0145
      DELTE(I)=0.                                                       SMES0146
      IF(E(I).LT..01) GO TO 138                                         SMES0147
      SE=SIN(E(I))                                                      SMES0148
      CE=COS(E(I))                                                      SMES0149
```

```
      IF(E(I).GT..17453293) GO TO 137                                   SMES0150
      T=(1.03585796-(.01072014-(.1279119E-7-.1227363E-7/E(I))/E(I))/    SMES0151
     1E(I))*CFRAC1 *CE/SE                                               SMES0152
      F=RTMG(I)/RM(I)                                                   SMES0153
      DELTE(I)=T-F*((CFRAC1+T*T/2.)*CE-T*SE)                            SMES0154
      GO TO 138                                                         SMES0155
  137 DELTE(I)=CFRAC1*CE/SE                                             SMES0156
  138 DR(I)=CFRAC1/(CFRAC2*SIN(E(I)+DELTE(I)))*1.E-3                    SMES0157
  139 GO TO(140,150,150,180),MTYPE                                      SMES0158
C     C-BAND MEASUREMENTS                                               SMES0159
  140 CONTINUE                                                          SMES0160
      ANG1=AZ                                                           SMES0161
      ANG2=E(1)                                                         SMES0162
      R(3)=RATOB                                                        SMES0163
      R(4)=-.12345678E20                                                SMES0164
      GO TO (141,190),NFRAC                                             SMES0165
C     C-BAND REFRACTION                                                 SMES0166
C     AZIMUTH IS ASSUMED UNAFFECTED BY REFRACTION                       SMES0167
  141 ANG2=ANG2+DELTE(1)                                                SMES0168
      R(3)=R(3)+DR(1)                                                   SMES0169
      GO TO 190                                                         SMES0170
C     GODDARD OR USBS MEASUREMENTS                                      SMES0171
  150 CONTINUE                                                          SMES0172
      IF(MTYPE.EQ.2) NALIGN=1                                           SMES0173
      GO TO (160,170),NALIGN                                            SMES0174
C     30-FOOT DISH                                                      SMES0175
  160 CALL CROSS(ENOB,XSOB,CROB)                                        SMES0176
      ANG1=ATAN2(XTEOB,-XTDOB)                                          SMES0177
      ANG2=ATAN(XTNOB/FNORM(CROB))                                      SMES0178
      GO TO 175                                                         SMES0179
C     85-FOOT DISH                                                      SMES0180
  170 CALL CROSS(EAOB,XSOB,CROB)                                        SMES0181
      ANG1=ATAN2(-XTNOB,-XTDOB)                                         SMES0182
      ANG2=ATAN(XTEOB/FNORM(CROB))                                      SMES0183
  175 R(3)=RATOB+RATTR                                                  SMES0184
      GO TO(176,177),NFRAC                                              SMES0185
C     USBS ANGLE REFRACTION                                             SMES0186
  176 SX=SIN(ANG1)                                                      SMES0187
      CX=COS(ANG1)                                                      SMES0188
      SY=SIN(ANG2)                                                      SMES0189
      CY=COS(ANG2)                                                      SMES0190
      ANG1=ANG1-SX/(CY*COS(E(1)))*DELTE(1)                              SMES0191
      ANG2=ANG2-CX*SY/COS(E(1))*DELTE(1)                                SMES0192
      R(3)=R(3)+DR(1)+DR(2)                                             SMES0193
  177 IF(MTYPE .EQ.2) R(3)=R(3)/SPDLT                                   SMES0194
  180 CONTINUE                                                          SMES0195
C     DOPPLER OBSERVABLE FOR GODDARD, USBS, OR DSIF                     SMES0196
      IF(MTYPE.EQ.2) SA(21)=1.                                          SMES0197
      CONST=SA(21)*SA(22)/SPDLT                                         SMES0198
      R(4)=SA(20)*SA(23)+CONST*(RATOB+RATTR-RATOBX-RATTRX)              SMES0199
      GO TO(181,185),NFRAC                                              SMES0200
C     DOPPLER REFRACTION CORRECTION                                     SMES0201
  181 CALL CROSS(XSOB,OMG,Z1)                                           SMES0202
      CALL CROSS(XSTR,OMG,Z1(4))                                        SMES0203
      DO 1810 I=1,3                                                     SMES0204
      Z1(I)=Z1(I)+XSOB(I+3)                                             SMES0205
 1810 Z1(I+3)=Z1(I+3)+XSTR(I+3)                                         SMES0206
      CALL CROSS(DNOB,XSOB,DCXSOB)                                      SMES0207
      CALL CROSS(DNTR,XSTR,DCXSTR)                                      SMES0208
      CALL CROSS(DCXSOB,XSOB,DUM1)                                      SMES0209
      CALL CROSS(DCXSTR,XSTR,DUM2)                                      SMES0210
      DEN1=R2OB*FNORM(DCXSOB)                                           SMES0211
      DEN2=R2TR*FNORM(DCXSTR)                                           SMES0212
      DO 182 I=1,3                                                      SMES0213
      DUM1(I)=DUM1(I)/DEN1                                              SMES0214
  182 DUM2(I)=DUM2(I)/DEN2                                              SMES0215
      EDOT(1)=DOT(DUM1,Z1)                                              SMES0216
      EDOT(2)=DOT(DUM2,Z1(4))                                           SMES0217
      E1X=DELTE(1)-SA(23)*EDOT(1)                                       SMES0218
      E2X=DELTE(2)-SA(23)*EDOT(2)                                       SMES0219
      DRX(1)=CFRAC1/(CFRAC2*SIN(E1X))*1.E-3                             SMES0220
      DRX(2)=CFRAC1/(CFRAC2*SIN(E2X))*1.E-3                             SMES0221
      R(4)=R(4)+CONST*(DR(1)+DR(2)-DRX(1)-DRX(2))                       SMES0222
  185 IF(MTYPE.EQ.2) R(4)=2.*SA(20)*SA(23)-R(4)                         SMES0223
      IF(MTYPE.NE.4) GO TO 190                                          SMES0224
```

```
C     DSIF ANGLES                                                       SMES0225
      R(3)=-.12345678E20                                                SMES0226
      ANG1=GHAN+SA(4)  -ARKTNS(360,XSOB(1),XSOB(2))                     SMES0227
      CALL CROSS(XSOB,EK,SCEK)                                          SMES0228
      ANG2=ATAN(XSOB(3)/FNORM(SCEK))                                    SMES0229
      GO TO (189,190),NFRAC                                             SMES0230
C     DSIF ANGLE REFRACTION                                             SMES0231
  189 ANG1=ANG1+SIN(ANG1)**2*CPHI/(SIN(AZ)*COS(E(1))**2)*DELTE(1)       SMES0232
      ANG2=ANG2+(COS(E(1))*SPHI-COS(AZ)*SIN(E(1))*CPHI)/COS(ANG2)       SMES0233
     1*DELTE(1)                                                         SMES0234
  190 CONTINUE                                                          SMES0235
C     ADD RANDOM AND BIAS ERRORS                                        SMES0236
      DO 210 I=1,4                                                      SMES0237
      J=MOD(I+1,4)+2                                                    SMES0238
      IF(ISA(J).EQ.0) GO TO 209                                         SMES0239
      IF(ISA(J).EQ.2) GO TO 200                                         SMES0240
      BIAS=SA(J+10)                                                     SMES0241
      IF(I.EQ.3.AND.ISA(1).EQ.2) BIAS=BIAS/SPDLT                        SMES0242
      IF(I.EQ.4) BIAS=BIAS*SA(23)                                       SMES0243
      R(I)=R(I)+BIAS                                                    SMES0244
  200 RANDOM=SA(J+6)                                                    SMES0245
      IF(I.EQ.3.AND.ISA(1).EQ.2) RANDOM=RANDOM/SPDLT                    SMES0246
      IF(I.EQ.4) RANDOM=RANDOM*SA(23)                                   SMES0247
      R(I)=R(I)+RANDOM*BARN(-1)                                         SMES0248
      RMEAS(I+1)=R(I)                                                   SMES0249
      GO TO 210                                                         SMES0250
  209 RMEAS(I+1)=-.12345678E20                                          SMES0251
  210 CONTINUE                                                          SMES0252
C     INSURE ANGLES TO BE BETWEEN ZERO AND TWO PI                       SMES0253
      IF(RMEAS(2).LT.0..AND.RMEAS(2).NE.-.12345678E20) RMEAS(2)=RMEAS(2)SMES0254
     1+6.28318531                                                       SMES0255
      IF(RMEAS(3).LT.0..AND.RMEAS(3).NE.-.12345678E20) RMEAS(3)=RMEAS(3)SMES0256
     1+6.28318531                                                       SMES0257
      IF(RMEAS(2).GT.6.28318531) RMEAS(2)=RMEAS(2)-6.28318531           SMES0258
      IF(RMEAS(3).GT.6.28318531) RMEAS(3)=RMEAS(3)-6.28318531           SMES0259
      IF(ISA(9).NE.0) RMEAS(1)=RMEAS(1)+SA(19)                          SMES0260
      RETURN                                                            SMES0261
      END                                                               SMES0262
```

Subroutine: SØLRD

Purpose: To compute and sum the acceleration due to solar radiation pressure (see also DPSØLR).

Calling Sequence: CALL SØLRD (RC,RS,RP,C,A)

Input and Output

I/Ø	Symbolic Name of Location	Program Dimensions	Math Symbol	Data Dimensions or Units	Definition
I	RC	d(3)	R	km	Vehicle position relative to the central body.
I	RS	d(3)	R_s	km	Sun's position relative to the central body.
I	RP	d	R_o	km	Central body radius.
I	C	d	C	km^3/sec^2	Solar pressure coefficient.
IØ	A	d(3)	A	km/sec^2	Acceleration.

Common storages used: 16 cells

Subroutines required: DDØT, DVNØRM

```
$IBFTC MC132R  XR3,M94,NODD,LIST
      SUBROUTINE SOLRD (RC,RS,RP,C,A)                                   SOLR0001
C     SOLAR RADIATION PRESSURE ACCELERATION                             SOLR0002
      DOUBLE PRECISION  A(3),C,RC(3),RS(3),RP                           SOLR0003
     1                 ,D,DDOT,DVNORM                                   SOLR0004
      COMMON            D(8)                                            SOLR0005
C                                                                       SOLR0006
    1 D(1) = DDOT(RS,RS)                                                SOLR0007
      D(2) = DDOT(RC,RS)/D(1)                                           SOLR0008
      DO 2 I=1,3                                                        SOLR0009
      D(I+2) = RC(I)-RS(I)                                              SOLR0010
    2 D(I+5) = RC(I)-D(2)*RS(I)                                         SOLR0011
      IF(D(2).GE.0.D0) GO TO 3                                          SOLR0012
      D(1) = DDOT(D(6),D(6))-RP*RP                                      SOLR0013
      IF (D(1).LT.0.D0) GO TO 999                                       SOLR0014
    3 D(1) = DVNORM(D(3),D(3))                                          SOLR0015
      D(1) = C/D(1)/D(1)                                                SOLR0016
      DO 4 I=1,3                                                        SOLR0017
    4 A(I) = A(I)+D(1)*D(I+2)                                           SOLR0018
  999 RETURN                                                            SOLR0019
      END
```

Subroutine: SØLRDP

Purpose: To compute: the acceleration due to solar radiation pressure, the gradient of the acceleration, and the partial derivative of the acceleration with respect to the coefficient.

Calling Sequence: CALL SØLRDP (RC,RS,RP,C,A,AP,G,N)

Input and Output

I/Ø	Symbolic Name or Location	Program Dimensions	Math Symbol	Data Dimensions or Units	Definition
I	RC	d(3)	R_C	km	Vehicle position relative to the central body.
I	RS	d(3)	R_s	km	Sun's position relative to the central body.
I	RP	d	R_o	km	Central body radius.
I	C	d	C	km^3/sec^2	Solar pressure coefficient.
IØ	A	d(3)	A	km/sec^2	Acceleration.
Ø	AP	d(3)	$\frac{1}{c}A$	$1/km^2$	∂(Acceleration)/∂C
IØ	G	d(3,3)	∇A	$1/sec^2$	Gradient of the acceleration.
I	N				Option key: =o: acceleration only. ≠o: ∂A/∂C and gradient.

Common storages used: 18 cells

Subroutines required: DDØT, DVNØRM

Method:

The subroutine computes acceleration due to solar radiation pressure from

$$A = C \frac{R}{r^3}$$

and sums this acceleration with the input acceleration. Here R is the position of the vehicle relative to the sun,

$$R = R_C - R_s$$

$$r = |R|$$

The gradient

$$\nabla_R A = \frac{C}{r^3} \left(I - \frac{3RR^T}{r^3}\right)$$

is summed with the input gradient, and if N<0, the partial derivative

$$\frac{\partial A}{\partial C} = \frac{R}{r^3}$$

is returned in AP.

Note that C is the value (assumed constant) of the solar radiation pressure constant ($.97 \times 10^{-7}$ lb/ft^2) x the reflective surface x the surface reflectivity - the vehicle mass, and that the component of acceleration normal to R is neglected.

The component of R normal to R_s is

$$R_n = R_c - d\,R_s$$

$$d = R_c \cdot R_s / R_s^2$$

The subroutine assumes that the space vehicle is shaded by the central body if both

$$d < 0$$

$$|R_n| < R_o$$

```
$IBFTC MC132S  XR3,M94,NODD,LIST
      SUBROUTINE SOLRDP (RC,RS,RP,C,A,AP,G,N)                           SLRP0001
C     SOLAR RADIATION PRESSURE ACCELERATION                             SLRP0002
      DOUBLE PRECISION   A(3),AP(3),C,G(3,3),RC(3),RS(3),RP             SLRP0003
     1                  ,D,DDOT,DVNORM                                  SLRP0004
      COMMON             D(9)                                           SLRP0005
C                                                                       SLRP0006
    1 D(1) = C                                                          SLRP0007
      D(2) = DDOT(RS,RS)                                                SLRP0008
      D(3) = DDOT(RC,RS)/D(2)                                           SLRP0009
      DO 2 I=1,3                                                        SLRP0010
      D(I+3) = RC(I)-RS(I)                                              SLRP0011
    2 D(I+6) = RC(I)-D(3)*RS(I)                                         SLRP0012
      IF(D(3).GE.0.D0) GO TO 3                                          SLRP0013
      D(2) = DDOT(D(7),D(7))-RP*RP                                      SLRP0014
      IF (D(2).LT.0.D0) D(1) = 0.D0                                     SLRP0015
    3 D(2) = DVNORM(D(4),D(4))                                          SLRP0016
      D(2) = D(1)/D(2)/D(2)                                             SLRP0017
      D(1) = D(2)/D(1)                                                  SLRP0018
      IF (N.GE.0) GO TO 5                                               SLRP0019
      DO 4 I=1,3                                                        SLRP0020
    4 AP(I) = D(1)*D(I+3)                                               SLRP0021
    5 IF (D(1).EQ.0.D0) GO TO 999                                       SLRP0022
      DO 6 I=1,3                                                        SLRP0023
    6 A(I) = A(I)+D(2)*D(I+3)                                           SLRP0024
      IF (N.EQ.0) GO TO 999                                             SLRP0025
      D(3) =-3.D0*D(2)                                                  SLRP0026
      DO 7 I=1,3                                                        SLRP0027
      G(I,I) = G(I,I)+D(2)                                              SLRP0028
      D(1) = D(3)*D(I+3)                                                SLRP0029
      DO 7 J=1,3                                                        SLRP0030
    7 G(I,J) = G(I,J)+D(1)*D(J+3)                                       SLRP0031
  999 RETURN                                                            SLRP0032
      END
```

Subroutine: SØRDR

Purpose: To sort an array X in ascending order, preserving the correspondence between X and another array, NX.

Calling Sequence: CALL SØRDR (X,NX,KK)

Input and Output

I/Ø	Symbolic Name or Location	Program Dimensions	Math Symbol	Data Dimensions or Units	Definition
IØ	X	KK			Array to be sorted.
IØ	NX	KK			The elements of NX are sorted in the same way as the elements of X.
I	KK				Number of elements of X (and NX).

Common storages used: None

Subroutines required: None

```
$IBFTC MC13SO  NOREF,M94,NODD,XR3
CMC13SO     SORDR                                                   SORD0010
      SUBROUTINE SORDR(X,NX,KK)                                     SORD0020
      DIMENSION X(1),NX(1)                                          SORD0030
      IF(KK.EQ.1) GO TO 6                                           SORD0040
      JJ=1                                                          SORD0050
      DO 5 J=2,KK                                                   SORD0060
      L=J-1                                                         SORD0070
      IF(X(J).GT.X(L)) GO TO 5                                      SORD0080
      XSAV=X(J)                                                     SORD0090
      NSAV=NX(J)                                                    SORD0100
      X(J)=X(L)                                                     SORD0110
      NX(J)=NX(L)                                                   SORD0120
      GO TO (1,2),JJ                                                SORD0130
1     JJ=2                                                          SORD0140
      IF(J-2) 2,4,2                                                 SORD0150
2     DO 3 I=3,J                                                    SORD0160
      K=L-1                                                         SORD0170
      IF(XSAV.GT.X(K)) GO TO 4                                      SORD0180
      X(L)=X(K)                                                     SORD0190
      NX(L)=NX(K)                                                   SORD0200
      L=L-1                                                         SORD0210
3     CONTINUE                                                      SORD0220
4     X(L)=XSAV                                                     SORD0230
      NX(L)=NSAV                                                    SORD0240
5     CONTINUE                                                      SORD0250
6     RETURN                                                        SORD0260
      END                                                           SORD0270
```

Subroutine: SØRDR2

Purpose: A push-down sort routine that sorts in ascending order a floating point number array and retains the correspondence with a fixed-point array and, optionally, a second floating point array.

Calling Sequence: CALL SØRDR2 (X,NX,KK,M,T)

Input and Output

I/Ø	Symbolic Name or Location	Program Dimensions	Math Symbol	Data Dimensions or Units	Definition
IØ	X	as required			Floating point array sorted in ascending order.
IØ	NX	as required			A fixed point array whose correspondence with X is retained.
I	KK				Number of elements of X to be sorted.
I	M				Option key M=1, Y is left untouched M=2, Y is altered to retain correspondence with X.
IØ	Y	as required			Secondary array, the treatment of which depends on M

Common storages used: None

Subroutines required: None

```
$IBFTC MC1302  NOREF,M94,NODD,XR3
CMC1302  SORDR2   2 FLOAT 1 FIX ARRAY ORDERED AS X                    SDR20001
      SUBROUTINE SORDR2(X,NX,KK,M,Y)                                  SDR20002
      DIMENSION  X(1),   Y(1),   NX(1)                                SDR20003
      LOGICAL KOY                                                     SDR20004
      IF(KK.EQ.1) GO TO 6                                             SDR20005
      KOY=M.EQ.2                                                      SDR20006
      JJ=1                                                            SDR20007
      DO 5 J=2,KK                                                     SDR20008
      L=J-1                                                           SDR20009
      IF(X(J).GT.X(L)) GO TO 5                                        SDR20010
      XSAV=X(J)                                                       SDR20011
      NSAV=NX(J)                                                      SDR20012
      IF(KOY) YSAV=Y(J)                                               SDR20013
      X(J)=X(L)                                                       SDR20014
      NX(J)=NX(L)                                                     SDR20015
      IF(KOY) Y(J)=Y(L)                                               SDR20016
      GO TO (1,2),JJ                                                  SDR20017
1     JJ=2                                                            SDR20018
      IF(J-2) 2,4,2                                                   SDR20019
2     DO 3 I=3,J                                                      SDR20020
      K=L-1                                                           SDR20021
      IF(XSAV.GT.X(K)) GO TO 4                                        SDR20022
      X(L)=X(K)                                                       SDR20023
      NX(L)=NX(K)                                                     SDR20024
      IF(KOY) Y(L)=Y(K)                                               SDR20025
      L=L-1                                                           SDR20026
3     CONTINUE                                                        SDR20027
4     X(L)=XSAV                                                       SDR20028
      NX(L)=NSAV                                                      SDR20029
      IF(KOY) Y(L)=YSAV                                               SDR20030
5     CONTINUE                                                        SDR20031
6     RETURN                                                          SDR20032
      END                                                             SDR20033
```

Subroutine: STARTB

Purpose: To load the next beacon on time from the BSTART array into the critical event array in position EVNT(1).

Calling Sequence: CALL STARTB (KMAXB,KBEA)

Input and Output

I/Ø	Symbolic Name or Location	Program Dimensions	Math Symbol	Data Dimensions or Units	Definition
IØ	KMAXB				Number of on-off time pairs in the BSTART and BSTØP arrays.
IØ	KBEA	(75)			Beacon numbers corresponding to on-off time pairs in BSTART and BSTØP arrays.

Common storages used: /INPCØM/,/WCØM/,/EXIC/

Subroutines required: CRITIC, EXINST, SBEV2

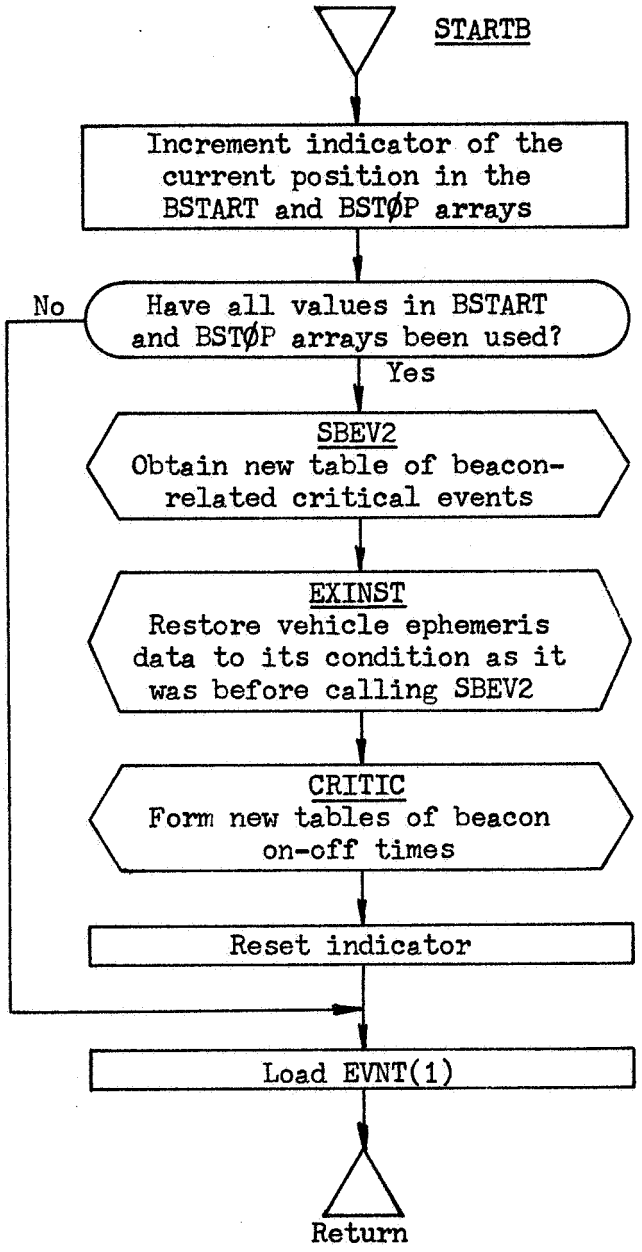
STARTB
Increment indicator of the current position in the BSTART and BSTØP arrays
No
Have all values in BSTART and BSTØP arrays been used?
Yes
SBEV2
Obtain new table of beacon-related critical events
EXINST
Restore vehicle ephemeris data to its condition as it was before calling SBEV2
CRITIC
Form new tables of beacon on-off times
Reset indicator
Load EVNT(1)
Return

```
$IBFTC MC13AB  NOREF,M94,NODD,XR3
CMC13AB  STARTB  LOADS EVNT1 WITH NEXT BSTART
      SUBROUTINE STARTB(KMAXB,KBEA)
C  SUBROUTINES REQUIRED  SBEV2,   CRITIC
      COMMON/INPCOM/C(700)/WCOM/IW(550),CW(1450)
      COMMON/EXIC/W(36),CRX(9,2)
      DIMENSION    IBEE(10),      IBC(10),            IBTIM(50)
     1,            B(91),         XIN(6),             TI(3)
     2,            BTIME(50),     BECR(10),           MBOD(4)
     3,            TIM(2),        IB(36)
      DIMENSION     BSTART(75),   BSTOP(75),      KBEA(75)
      EQUIVALENCE  (C(476),B)
      EQUIVALENCE  (IW(20),IBC),  (IW(367),IBEE),     (IW(382),NOR)
     1,            (IW(386),IK2), (IW(387),KBMAX),    (IW(439),IBTIM)
     2,            (IW(312),IB), (CW(1134),XIN),     (CW(1140),TSEC)
     3,            (CW(1160),TI), (CW(1180),EVNT1),   (CW(1189),TWT2)
     4,            (CW(1250),BTIME),                  (CW(1441),BECR)
      EQUIVALENCE   (CW(372),BSTART),  (CW(447),BSTOP)
      EQUIVALENCE  (CW(1179),FLTIM)
      EQUIVALENCE  (IW(489),ITRIG),  (IW(490),KOUNT)
      DOUBLE PRECISION TWR
      IK2 = IK2+1
      IF(IK2-KMAXB) 175,175,174
174   CONTINUE
      MBOD(1) = IB(36)
      MBOD(2) =0
      TIM=TSEC
C  SHOULD = BTIME(KBMAX)       HOPEFURLLY IT DOES FROM MEASUR
      TIM(2)=TWT2
      IF(TWT2.GT.FLTIM) TIM(2)=FLTIM
C   NEED XIN AND TI AT TIM  PERHAPS THERE FROM MEASUR(PROP)
      ITRIG=1
      CALL SBEV2(XIN,TI,NOR,TIM,B,8,10,IBC,BECR,IBEE,IBTIM,BTIME,MBOD)
      IF(KOUNT.LE.0) GO TO 1742
      DO 1741 I=1,KOUNT
 1741 BACKSPACE 10
      M=0
      N=18
      TWR=0.D0
      CALL EXINST(TWR,M,N,XIN,XIN(4),W,CRX,10,ITRIG,KOUNT)
 1742 KBMAX=MBOD(4)
      ITRIG=0
      KOUNT=0
      CALL CRITIC(10,IBC,BTIME,IBTIM,IBEE,KBMAX,TIM,BSTART,BSTOP,KBEA,
     1KMAXB)
      IK2 = 1
175   CONTINUE
      EVNT1=BSTART(IK2)
      RETURN
      END
```

Subroutine: STARTS

Purpose: To load the next station on time from the SSTART array into the critical event array in position EVNT(1).

Calling Sequence: CALL STARTS (KMAXS,KSTA)

Input and Output

I/Ø	Symbolic Name or Location	Program Dimensions	Math Symbol	Data Dimensions or Units	Definition
IØ	KMAXS				Number of on-off time pairs in the SSTART and SSTØP arrays.
IØ	KSTA	(75)			Station numbers corresponding to on-off time pairs in SSTART and SSTØP arrays.

Common storages used: /INPCØM/,/WCØM/,/EXIC/

Subroutines required: CRITIC, EXINST, SBEV2

See also STARTB

```
$IBFTC MC13AS  NOREF,M94,NODD,XR3
CMC13AS  STARTS  LOADS EVNT1 WITH NEXT SSTART                          STAS0001
      SUBROUTINE STARTS(KMAXS,KSTA)                                    STAS0002
C  SUBROUTINES REQUIRED  SBEV2,   CRITIC                               STAS0003
      COMMON/INPCOM/C(700)/WCOM/IW(550),CW(1450)                       STAS0004
      COMMON/EXIC/W(36),CRX(9,2)                                       STAS0005
      DIMENSION    ISEE(12),      ISC(12),       ISTIM(50)             STAS0006
     1,            S(23,12),      XIN(6),        TI(3)                 STAS0007
     2,            STIME(50),     SECR(12),      MBOD(4)               STAS0008
     3,            TIM(2)                                              STAS0009
      DIMENSION     SSTART(75),   SSTOP(75),      KSTA(75)             STAS0010
      EQUIVALENCE  (C(200),S)                                          STAS0011
      EQUIVALENCE   (IW(383),ITARG)                                    STAS0012
      EQUIVALENCE  (IW(8),ISC),   (IW(355),ISEE),     (IW(382),NOR)    STAS0013
     1,            (IW(384),IK1), (IW(385),KSMAX),    (IW(389),ISTIM)  STAS0014
     2,            (CW(1134),XIN),(CW(1140),TSEC)                     STAS0015
     3,            (CW(1160),TI), (CW(1179),FLTIM),   (CW(1180),EVNT1) STAS0016
     4,            (CW(1189),TWT2),(CW(1200),STIME),  (CW(1360),SECR) STAS0017
      EQUIVALENCE   (CW(222),SSTART),  (CW(297),SSTOP)                 STAS0018
      EQUIVALENCE  (IW(489),ITRIG),  (IW(490),KOUNT)                   STAS0019
      DOUBLE PRECISION TWR                                             STAS0020
      IK1 = IK1+1                                                      STAS0021
      IF(IK1-KMAXS) 169,169,168                                        STAS0022
168   CONTINUE                                                         STAS0023
      MBOD(2)=ITARG                                                    STAS0024
      IF(ITARG.EQ.1) MBOD(2)=0                                         STAS0025
      MBOD(3) = 0                                                      STAS0026
      TIM=TSEC                                                         STAS0027
C  SHOULD = STIME(KSMAX)      HOPEFURLLY IT DOES FROM MEASUR           STAS0028
      TIM(2)=TWT2                                                      STAS0029
      IF(TWT2.GT.FLTIM) TIM(2)=FLTIM                                   STAS0030
C   NEED XIN AND TI AT TIM  PERHAPS THERE FROM MEASUR(PROP)            STAS0031
      ITRIG=1                                                          STAS0032
      CALL SBEV2(XIN,TI,NOR,TIM,S,23,12,ISC,SECR,ISEE,ISTIM,STIME,MBOD) STAS0033
      IF(KOUNT.LE.0) GO TO 1682                                        STAS0034
      DO 1681 I=1,KOUNT                                                STAS0035
 1681 BACKSPACE 10                                                     STAS0036
      M=0                                                              STAS0037
      N=18                                                             STAS0038
      TWR=0.D0                                                         STAS0039
      CALL EXINST(TWR,M,N,XIN,XIN(4),W,CRX,10,ITRIG,KOUNT)             STAS0040
 1682 KSMAX=MBOD(4)                                                    STAS0041
      ITRIG=0                                                          STAS0042
      KOUNT=0                                                          STAS0043
      CALL CRITIC(12,ISC,STIME,ISTIM,ISEE,KSMAX,TIM,SSTART,SSTOP,KSTA, STAS0044
     1KMAXS)                                                           STAS0045
      IK1 = 1                                                          STAS0046
169   CONTINUE                                                         STAS0047
      EVNT1=SSTART(IK1)                                                STAS0048
      RETURN                                                           STAS0049
      END                                                              STAS0050
```

Subroutine: STAT

Purpose: To obtain the vector from a body center to a tracking station and an orthogonal transformation relating inertial Cartesian coordinates X, Y, Z to local tangent plane coordinates North, East, Down.

Calling Sequence: CALL STAT (STA,GHAR,TR,RT,S,BRAD)

Input and Output

I/Ø	Symbolic Name or Location	Program Dimensions	Math Symbol	Data Dimensions or Units	Definition
I	STA	(3)	θ	rad	STA(1) = Station geodetic latitude
			λ	rad	STA(2) = Station geographic longitude, positive East
			h	km	STA(3) = Station altitude
I	GHAR			rad	Greenwich hour angle
Ø	TR	(3,3)			TR(1,I) = North unit vector TR(2,I) = East unit vector TR(3,I) = Down unit vector
Ø	RT	(3)		km	Inertial radius vector to station
Ø	S	(5)			S(1) = $\sin\theta$ S(2) = $\cos\theta$ S(3) = $\sin(\lambda + GHAR)$ S(4) = $\cos(\lambda + GHAR)$
			c		S(5) = $(\cos^2\theta + b^2\sin^2\theta/a^2)^{\frac{1}{2}}$
I	BRAD	(2)	a		BRAD(1) = semi-major axis of central body
			b		BRAD(2) = semi-minor axis of central body

Common storages used: None

Subroutines required: None

Method

Let the inertial longitude by represented by v, where

$$v = \lambda + GHAR$$

Then the orthogonal transformation relating inertial Cartesian coordinates RT to local tangent plane coordinates is given by the TR matrix

$$TR = \begin{bmatrix} -\sin\theta\cos v & -\sin v & -\cos\theta\cos v \\ -\sin\theta\sin v & \cos v & -\cos\theta\sin v \\ \cos\theta & 0 & -\sin\theta \end{bmatrix}$$

The inertial position of the station, RT, is

$$RT = \begin{bmatrix} (\frac{a}{c} + \sin v)\cos\theta\cos v \\ (\frac{a}{c} + \sin v)\cos\theta\sin v \\ (\frac{b^2}{ac} + \sin v)\sin\theta \end{bmatrix}$$

```
$IBFTC MC13SA  NOREF,M94,NODD,XR3
CMC13SA    SUBR. STAT            7/1/65     INCREASED CALL LIST
      SUBROUTINE STAT(STA,GHAR,TR,RT,S,BRAD)
      DIMENSION  STA(3),  TR(3,3),  RT(3),  S(5)
     1,          BRAD(2)
C     STA(1)=LATITUDE
C     STA(2)=LONGITUDE
C     STA(3)=ALTITUDE
      A=BRAD(1)
      B=BRAD(2)
      S(1)=SIN(STA(1))
      S(2)=COS(STA(1))
      TA=STA(2)+GHAR
      S(3)=SIN(TA)
      S(4)=COS(TA)
      S(5)= SQRT(S(2)*S(2)+B*B*S(1)*S(1)/(A*A))
      TR(1,1) = -S(1)*S(4)
      TR(2,1) = -S(1)*S(3)
      TR(3,1) =  S(2)
      TR(1,2) = -S(3)
      TR(2,2) =  S(4)
      TR(3,2)=0.
      TR(1,3) = -S(2)*S(4)
      TR(2,3) = -S(2)*S(3)
      TR(3,3) = -S(1)
      RT(1)=-(A/S(5)+STA(3))*TR(1,3)
      RT(2)=-(A/S(5)+STA(3))*TR(2,3)
      RT(3)=-(B*B/(A*S(5))+STA(3))*TR(3,3)
      RETURN
      END
```

Subroutine: STATE

Purpose: To compute central body position and velocity and Earth orientation, and to compute vehicle state relative to Earth.

Calling Sequence: CALL STATE(ET,UT,XX,TR,KEY)

Input and Output

I/Ø	Symbolic Name or Location	Program Dimensions	Math Symbol	Data Dimensions or Units	Definition
I	ET	d			Ephemeris time, seconds from 1950 Jan 0.0 ET.
I	UT	d			Universal time, second from 1950 Jan 0.0 UT.
Ø	XX	d(6)			Vehicle state with respect to Earth, computed along the conic defined by the last call of STEPDI.
Ø	TR	d(9)			Transformation from Earth-fixed (B-frame) coordinates at UT to C-frame coordinates
I	KEY				= 0, compute TR only. ≠ 0, also compute XX and central body state (loaded in DFMCØM).

Common storages used: //120 cells,/,/DCPCØM/,/DFMCØM/,/ESTCØM/,/MLECØM/

Subroutines required: DGTRN,DMVTRN,DPFMRS,STEPDT

```
$IBFTC MC13W5  XR3,M94,NODD,LIST
      SUBROUTINE STATF (ET,UT,XX,TR,KEY)                                STTE0001
C     COMPUTES EARTH ORIENTATION                                        STTE0002
C     COMPUTES VEHICLE AND CENTRAL BODY STATE                           STTE0003
C                                                                       STTE0004
      DOUBLE PRECISION   ET ,UT ,XX(6) ,TR(9)                           STTE0005
C                                                                       STTE0006
      COMMON             /DCPCOM/CDCP(900)                              STTE0007
      EQUIVALENCE        (CDCP(112),ETAPE ) ,(CDCP(111),IERR  )         STTE0008
     1                  ,(CDCP(777),ICB   )                             STTE0009
C                                                                       STTE0010
      COMMON             /ESTCOM/CEST(804)                              STTE0011
      EQUIVALENCE        (CEST( 61),FFEDAN)                             STTE0012
C                                                                       STTE0013
      COMMON             /DATCOM/CDAT(299)                              STTE0014
      DOUBLE PRECISION    OMEGA                                         STTE0015
      EQUIVALENCE        (CDAT(135),OMEGA )                             STTE0016
C                                                                       STTE0017
      COMMON             /MLECOM/CMLE(1070)                             STTE0018
      DOUBLE PRECISION    TB12C(3,3) ,UTIMR1                            STTE0019
      EQUIVALENCE        (CMLE( 81),TB12C ) ,(CMLE(  7),UTIMR1)         STTE0020
C                                                                       STTE0021
      COMMON             /DFMCOM/IFM(14),RFM(6,12)                      STTE0022
     1                          ,DFM (4),BFM (577),SNT(2,102)           STTE0023
      DOUBLE PRECISION    BFM,DFM,RFM                                   STTE0024
C                                                                       STTE0025
      COMMON              SAVE(90) ,TB2B1(9) ,XA(6)                     STTE0026
      DOUBLE PRECISION    TB2B1 ,XA                                     STTE0027
C                                                                       STTE0028
    1 IF (IERR.NE.0) GO TO 999                                          STTE0029
      CALL DGTRN  (TB2B1,0,(UTIMR1-UT)*OMEGA,TB12C(1,3))                STTE0030
      CALL DMVTRN (TB12C,TB2B1,TR,1,3)                                  STTE0031
      IF (KEY.EQ.0) GO TO 999                                           STTE0032
      CALL DPFMRS (ET,EFEDAN,ICB,IERR,ETAPE)                            STTE0033
      CALL STEPDT (ET,XA)                                               STTE0034
      DO 2 I=1,6                                                        STTE0035
    2 XX(I) = XA(I)-RFM(I,3)                                            STTE0036
  999 RETURN                                                            STTE0037
      END
```

Subroutine: STEPDI

Purpose: Computes initialization quantities for surboutine STEPDT(q.v.).

Calling Sequence: CALL STEPDI(T,X,U)

Input and Output

I/ϕ	Symbolic Name or Location	Program Dimensions	Math Symbol	Data Dimensions or Units	Definition
I	T	d	t_o	time	Time at initialization
I	X	d(6)	X_o	length, length/ time	Cartesian state at initialization
I	U	d	μ	$\frac{\text{Length}^3}{\text{time}^2}$	Gravitational constant

Common storages used: /STPCØM/

Subroutines required: DDØT,DNØRM

```
$IBFTC MC13SE  XR3,M94,NODD,LIST
      SUBROUTINE STEPDI (T,X,U)                                         STPI0001
C     INITIALIZATION SUBROUTINE FOR STEPDT                              STPI0002
C                                                                       STPI0003
C     T = INITIAL TIME, SECONDS                                         STPI0004
C     X = INITIAL CARTESIAN STATE                                       STPI0005
C     U = GRAVITATIONAL CONSTANT                                        STPI0006
C                                                                       STPI0007
      DOUBLE PRECISION   T     ,X(6) ,U     ,DDOT ,DNORM,DSQRT,TPI      STPI0008
C                                                                       STPI0009
      COMMON     /STPCOM/TI    ,XI(6),SU    ,RI   ,AI   ,SA   ,DI   ,SR STPI0010
     1                  ,PR    ,HP   ,OM    ,EP   ,R    ,G(4) ,B    ,FB STPI0011
     2                  ,D     ,F(4)                                   STPI0012
      DOUBLE PRECISION   TI    ,XI   ,SU    ,RI   ,AI   ,SA   ,DI   ,SR STPI0013
     1                  ,PR    ,HP   ,OM    ,EP   ,R    ,G    ,B    ,FB STPI0014
     2                  ,D     ,F                                      STPI0015
      DATA  TPI/6.2831853071795866/                                     STPI0016
C                                                                       STPI0017
      DO 1 I=1,6                                                        STPI0018
    1 XI(I) = X(I)                                                      STPI0019
      TI = T                                                            STPI0020
      RI = DNORM(XI)                                                    STPI0021
      SU = DSQRT(U)                                                     STPI0022
      AI = 2.D0/RI-DDOT(XI(4),XI(4))/U                                  STPI0023
      PR = DABS(AI)                                                     STPI0024
      SA = DSQRT(PR)                                                    STPI0025
      DI = DDOT(XI,XI(4))/SU                                            STPI0026
      PR = TPI/SU/SA/PR                                                 STPI0027
      HP = PR/2.D0                                                      STPI0028
      OM = 1.D0-RI*AI                                                   STPI0029
      SR = SU/RI                                                        STPI0030
      EP = SU*5.D-12                                                    STPI0031
      G(1) = 1.D0                                                       STPI0032
      DO 2 I=2,6                                                        STPI0033
    2 G(I) = 0.D0                                                       STPI0034
      D  = DI                                                           STPI0035
      R  = RI                                                           STPI0036
      RETURN                                                            STPI0037
      END
```

Subroutine: STEPDP

Purpose: Computes the state transition matrix, from time t_o to time t, on a conic section. Time t_o is the time of the last call of STEPDI and time t is the time of the last call of STEPDT(q.v.).

Calling Sequence: CALL STEPDP (PHI)

Input and Output

I/ϕ	Symbolic Name or Location	Program Dimensions	Math Symbol	Data Dimensions or Units	Definition
ϕ	PHI	d(6,6)	$\phi(t;t_o)$		State transition matrix

Common storages used: //42 cells,/STPCØM/

Subroutines required: None.

```
$IBFTC MC13S1  XR3,M94,NODD,LIST
      SUBROUTINE STEPDP (PHI)                                           STPP0001
C     CONIC TRANSITION MATRIX                                           STPP0002
C                                                                       STPP0003
      DOUBLE PRECISION   PHI(6,6)                                       STPP0004
      COMMON     /STPCOM/TI    ,XI(6),SU    ,RI    ,AI    ,SA    ,DI    ,SR   STPP0005
     1                  ,PR    ,HP    ,OM    ,EP    ,R     ,G(4)  ,B     ,FB   STPP0006
     2                  ,D     ,F(4)                                    STPP0007
      DOUBLE PRECISION   TI    ,XI    ,SU    ,RI    ,AI    ,SA    ,DI    ,SR   STPP0008
     1                  ,PR    ,HP    ,OM    ,EP    ,R     ,G     ,B     ,FB   STPP0009
     2                  ,D     ,F                                       STPP0010
      COMMON             C                                               STPP0011
      DOUBLE PRECISION   C(18)                                           STPP0012
C                                                                       STPP0013
    1 CONTINUE                                                          STPP0014
      C( 1) = SU*SU                                                     STPP0015
      C( 6) = G(3)/R                                                    STPP0016
      C( 2) =      -B*G(2)                                              STPP0017
      C( 3) = G(4)-B*G(3)                                               STPP0018
      C( 4) =-(C(2)+G(3)+G(3))/AI                                       STPP0019
      C( 5) =-(C(3)+G(4)+G(4))/AI                                       STPP0020
      C(18) = (C(4)+DI*C(3)+RI*C(2))/C(1)/R                             STPP0021
      C( 2) = (C(5)+DI*C(4)+RI*C(3))/C(1)/SU                            STPP0022
      C(12) = C(18)*F( 3)                                               STPP0023
      C(18) =-C(18)*C( 6)                                               STPP0024
      C( 9) = C( 2)*F( 3)+C( 4)/C(1)/RI                                 STPP0025
      C(15) =-C( 2)*C( 6)+C( 5)/C(1)/SU                                 STPP0026
      C(16) = C( 1)/R/R/R                                               STPP0027
      C(13) = C(16)*F(1)                                                STPP0028
      C(16) = C(16)*F(2)                                                STPP0029
      C(12) = C(12)-C( 2)*C(13)+C( 3)/R/RI/SU                           STPP0030
      C(18) = C(18)-C( 2)*C(16)+C( 4)/R/C(1)                            STPP0031
      C( 5) = G( 3)/C( 1)                                               STPP0032
      C( 8) =-C( 5)*F( 3)                                               STPP0033
      C(14) = C( 5)*C( 6)                                               STPP0034
      C(17) = G( 2)/SU/R                                                STPP0035
      C(11) = C( 5)*C(13)-C(17)*F( 3)                                   STPP0036
      C(17) = C( 5)*C(16)+C(17)*C( 6)                                   STPP0037
      C( 1) = C( 1)/RI/RI/RI                                            STPP0038
      C( 2) = G( 2)/RI/SU                                               STPP0039
      C( 3) = G( 1)/RI/R                                                STPP0040
      C( 7) = C( 9)+C( 5)                                               STPP0041
      C(10) = C(12)+G( 2)/R/SU                                          STPP0042
      C( 7) = C( 1)*C( 7)-C( 2)*F( 3)                                   STPP0043
      C(10) = C( 1)*C(10)+C( 2)*C(13)-C( 3)*F( 3)                       STPP0044
      C(13) = C( 1)*C(15)+C( 2)*C( 6)                                   STPP0045
      C(16) = C( 1)*C(18)+C( 2)*C(16)+C( 3)*C( 6)                       STPP0046
      DO 3 I=1,3                                                        STPP0047
      DO 2 J=1,6                                                        STPP0048
      C(J) = C(J+6)*XI(I)+C(J+12)*XI(I+3)                               STPP0049
    2 CONTINUE                                                          STPP0050
      DO 3 J=1,3                                                        STPP0051
      PHI(I  ,J  ) = C(1)*XI(J)+C(2)*XI(J+3)                            STPP0052
      PHI(I  ,J+3) = C(2)*XI(J)+C(3)*XI(J+3)                            STPP0053
      PHI(I+3,J  ) = C(4)*XI(J)+C(5)*XI(J+3)                            STPP0054
      PHI(I+3,J+3) = C(5)*XI(J)+C(6)*XI(J+3)                            STPP0055
    3 CONTINUE                                                          STPP0056
      DO 4 I=1,15,7                                                     STPP0057
      PHI(I   ,1) = PHI(I   ,1) + F(1)                                  STPP0058
      PHI(I+18,1) = PHI(I+18,1) + F(2)                                  STPP0059
      PHI(I+ 3,1) = PHI(I+ 3,1) + F(3)                                  STPP0060
      PHI(I+21,1) = PHI(I+21,1) + F(4)                                  STPP0061
    4 CONTINUE                                                          STPP0062
      RETURN                                                            STPP0063
      END
```

Subroutine: STEPDT

Purpose: Provides the Cartesian state on a conic trajectory at a time T. Subroutine STEPDI provides the initialization of necessary quantities for subsequent calls of STEPDT

Calling Sequence: CALL STEPDT (T,X)

Input and Output

I/Ø	Symbolic Name or Location	Program Dimensions	Math Symbol	Data Dimensions or Units	Definition
I	T	d	t	time	Time, referenced to same epoch as t_o in call of STEPDI.
Ø	X	d(6)	X(t)	length, length/time	Cartesian state at time T.

Common storages used: //12 cells,/STPCØM/

Subroutines required: None.

References:

1. R.H. Battin, "Astronautical Guidance," McGraw-Hill, New York, 1964, pp. 50-52.

2. S. Pines, "Mean Conic State Transition Matrix," Astro Consultants, Inc., Huntington, L.I., N.Y.

Usage:

Subroutine STEPDI,STEPDT,STEPDP use the universal functions for the solution of Kepler's equation, and for computing the state transition matrix. Subroutine STEPDI computes the constants used by STEPDT and STEPDP, and initializes the universal functions. STEPDT solves Kepler's equation using a second-order iteration and outputs position and velocity at the desired time. STEPDP outputs the state transition matrix. The labelled common STPCØM is used for storage of the orbit constants and current values of the universal function.

Once STPCØM is loaded by STEPDI, STEPDT may be called at any sequence of times. Each call of STEPDP, however, must be preceded by a call of STEPDT <u>at the same time</u>.

Theory:

Let $R(t), V(t)$ denote the conic position and velocity of time t, and let

$$R_o = R(t_o)$$

$$V_o = V(t_o)$$

From R_o, V_o, we may compute

$$r_o = |R_o|$$

$$\frac{1}{a} = \frac{2}{r_o} - \frac{V_o^2}{\mu}$$

$$d_o = R_o \cdot V_o / \sqrt{\mu}$$

The regularized incremental eccentric anomaly, β, is defined as

$$\beta = \sqrt{|a|}\,(E - E_o)$$

where E is the eccentric anomaly at time t. Then Kepler's equation may be written

$$\sqrt{\mu}(t - t_o) = a[\beta - (d - d_o)] \,. \qquad (1)$$

The transcendental functions F_i, G_i are defined as

$$F_i(\alpha) = \sum_{k=0}^{\infty} (-1)^k \frac{\alpha^{2k}}{(i + 2k)!}$$

$$G_i(\beta) = \beta^i F_i(\alpha)$$

$$\alpha^2 = \beta^2/a$$

The G_i may be written as the equivalent functions:

$$\left.\begin{aligned} G_o &= \cos\,(E - E_o) \\ G_1 &= \sqrt{a}\,\sin\,(E - E_o) \\ G_2 &= a[1 - \cos\,(E - E_o)] \\ G_3 &= a^{3/2}[(E - E_o) - \sin\,(E - E_o)] \end{aligned}\right\} \text{for ellipses}$$

$$\left.\begin{aligned} G_o &= \cosh\,(E - E_o) \\ G_1 &= \sqrt{|a|}\,\sinh\,(E - E_o) \\ G_2 &= |a|\,[\cosh\,(E - E_o) - 1] \\ G_3 &= |a|^{3/2}[\sinh\,(E - E_o) - (E - E_o)] \end{aligned}\right\} \text{for hyperbolas}$$

Kepler's equation (1) may now be written in the form

$$\begin{aligned} \sqrt{\mu}\,\tau &= F(\beta) \\ &= G_3 + d_o\,G_2 + r_o G_1 \end{aligned} \qquad (2)$$

where τ is the increment of time, $t - t_o$. Then

$$\begin{aligned} \sqrt{\mu}\,\frac{d\tau}{d\beta} &= F'(\beta) = G_2 + d_o\,G_1 + r_o\,G_o \\ \sqrt{\mu}\,\frac{d^2\tau}{d\beta^2} &= F''(\beta) = d_o\,G_o + \left(1 - \frac{r_o}{a}\right)G_1 \end{aligned} \qquad (3)$$

To determine β for a given time increment, τ, we write

$$F(\beta + \Delta\beta) = F(\beta) + F'(\beta)\Delta\beta + F''(\beta)\frac{\Delta\beta^2}{2!} + \ldots \tag{4}$$

and solve for $\Delta\beta$ so that

$$F(\beta + \Delta\beta) - \sqrt{\mu}\,\tau = 0$$

Let

$$\begin{aligned} F(\beta) - \sqrt{\mu}\,\tau &= a_o = (G_3 + d_o G_2 + r_o G_1) - \sqrt{\mu}\,\tau \\ F'(\beta) &= a_1 = G_2 + d_o G_1 + r_o G_o \\ F''(\beta) &= a_2 = d_o G_o + \left(1 - \frac{r_o}{a}\right) G_1 \end{aligned} \tag{5}$$

Then

$$a_o + a_1 \Delta\beta + a_2 \frac{\Delta\beta^2}{2} = 0 \tag{6}$$

The solution of equation (6) is

$$\Delta\beta = \frac{-2a_o}{a_1 \pm \sqrt{a_1^2 - 2a_o a_2}} \tag{7}$$

In equation (7), the positive sign is chosen so that the sign of $\Delta\beta$ is the same as the sign of error/slope.

The square root is approximated by

$$\sqrt{a_1^2 - 2a_o a_2} = a_1 - \frac{a_o a_2}{a_1} \tag{8}$$

The program uses the equation

$$\Delta\beta = \mathrm{sgn}(a_o) \left| \frac{a_o}{a_1 - \frac{1}{2}\frac{a_o a_2}{a_1}} \right| \tag{9}$$

where sgn() means the sign of the argument. This insures that the direction is proper for reducing the error in β since $F'(\beta)$ is always positive.

The magnitude of $\Delta\beta$ is limited so that

$$\frac{|\Delta\beta|}{\sqrt{|a|}} \leq 2 \tag{10}$$

For ellipses, the restriction implied by equation (10) prevents incremental anomaly steps greater than two radians.

The subroutines are designed so that starting values of β, $F'(\beta)$, and $F''(\beta)$ are computed by STEPDI. Thereafter, STEPDT retains the last computed values of these quantities for subsequent calls. This reduces the number of iterations required when STEPDT is called repeatedly at a series of time points on the same conic.

The iteration is terminated when either

$$|\Delta\beta| \leq |\beta| \cdot 3 \times 10^{-16} \tag{11}$$

or

$$|\Delta\beta| \leq \left(5 \times 10^{-12} \sqrt{\mu}\right) \frac{|\tau|}{r} \tag{12}$$

Equation (11) requires the $\Delta\beta$ to change the 16th figure of β.

Equation (12) may be understood by recognizing that

$$\frac{d\tau}{d\beta} = \frac{r}{\sqrt{\mu}}$$

hence, the $\Delta\beta$ change must be large enough to be equivalent to a change of 5 places in the 12th significant figure of τ, where τ is the time increment from the last call of STEPDI.

Having found values of β and the G_i series that satisfy the tolerances, the values of R(t) and V(t) are given by

$$\begin{aligned} R(t) &= fR_o + gV_o \\ V(t) &= \dot{f}R_o + \dot{g}V_o \end{aligned} \tag{13}$$

where

$$\begin{aligned} f &= 1 - \frac{G_2}{r_o} \\ g &= \tau - \frac{G_3}{\sqrt{\mu}} \\ \dot{f} &= - \frac{\sqrt{\mu}\, G_1}{r r_o} \\ \dot{g} &= 1 - \frac{G_2}{r} \end{aligned} \tag{14}$$

STEPDT has a special initialization test for:

(a) Preventing time steps greater than one-half period for ellipses.

(b) Setting the signs of the last values of β, G_1, and G_3 properly to correspond to the sign of the incremental time step.

Constraint (a) is accomplished by setting

$$DT = t - \left[\text{integer part} \left(\frac{t}{\text{period}} \right) \right] \text{period}.$$

If $| DT | > \frac{1}{2}$ period, then DT is assigned the new value DT_n where

$$DT_n = - \operatorname{sgn}(DT)(\text{period} - | DT |).$$

Constraint (b) is accomplished by testing whether β and DT have the same sign. If not, the signs of β, G_1, and G_3 are reversed.

The 6 X 6 transition matrix

$$\Phi = \begin{bmatrix} \frac{\partial R}{\partial R_o} & \frac{\partial R}{\partial V_o} \\ \frac{\partial V}{\partial R_o} & \frac{\partial V}{\partial V_o} \end{bmatrix}$$

is computed by STEPDP, using the equations

$$\frac{\partial R}{\partial R_o} = fI + \delta V E_1^T + \frac{\mu}{r_o^3} \left(E_3 + \frac{G_2}{\mu} R_o\right) R_o^T$$

$$\frac{\partial R}{\partial V_o} = gI + \delta V E_2^T + E_3 V_o^T \qquad (16)$$

$$\frac{\partial V}{\partial R_o} = \dot{f}I - \frac{\mu R}{r^3} E_1^T + \frac{\mu}{r_o^3} \left(E_4 + \frac{G_1}{r\sqrt{\mu}} R_o\right) R_o^T + \delta V E_5^T$$

$$\frac{\partial V}{\partial V_o} = \dot{g}I - \frac{\mu R}{r^3} E_2^T + E_4 V_o^T + \delta V E_6^T$$

where

$$\delta V = V - V_o = \dot{f}R_o + (\dot{g} - 1)V_o$$

$$R = fR_o + gV_o$$

$$E_1 = \frac{P_1}{r_o^3} R_o + \frac{r}{\mu} \delta V$$

$$E_2 = \frac{P_1}{\mu} V_o - \frac{G_2}{\mu} R_o$$

$$E_3 = \frac{2G_4 - \beta G_3}{r_o \mu} R_o + \frac{3G_5 - \beta G_4}{\mu \sqrt{\mu}} V_o \tag{17}$$

$$E_4 = \frac{G_3 - \beta G_2}{r r_o \sqrt{\mu}} R_o + \frac{2G_4 - \beta G_3}{r\mu} V_o$$

$$E_5 = \frac{P_2 - r_o^2 G_o}{r r_o^3} R_o - \frac{G_1}{r\sqrt{\mu}} V_o$$

$$E_6 = \frac{P_2}{r\mu} V_o - \frac{G_1}{r\sqrt{\mu}} R_o$$

And

$$P_1 = \frac{(3G_5 - \beta G_4) + d_o(2G_4 - \beta G_3) + r_o(G_3 - \beta G_2)}{\sqrt{\mu}}$$

$$P_2 = (2G_4 - \beta G_3) + d_o(G_3 - \beta G_2) - r_o \beta G_1 \tag{18}$$

The constants and functions of β are obtained from STPCØM, and must have been stored by appropriate calls of STEPDI and STEPDT.

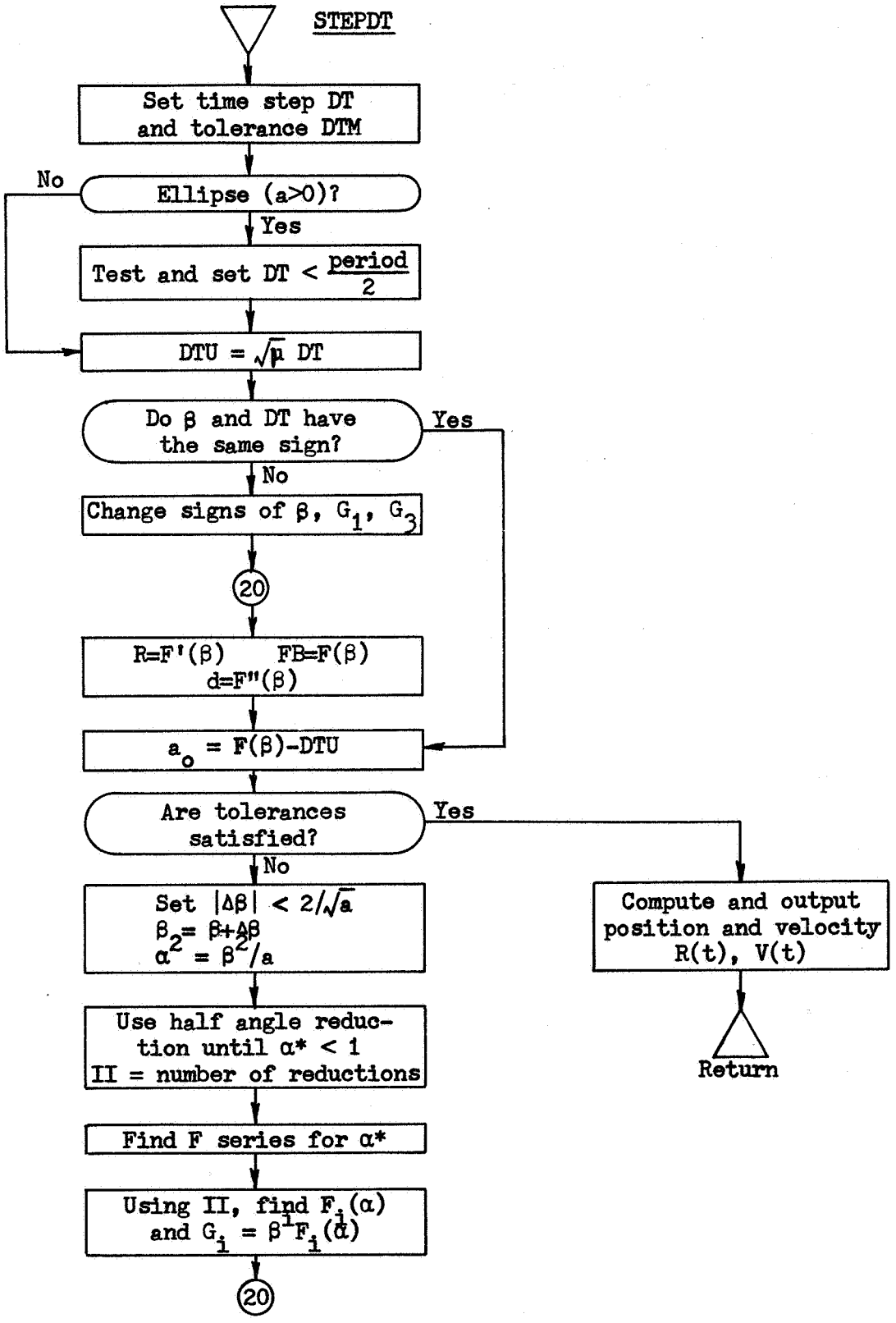
STEPDT
Set time step DT and tolerance DTM
Ellipse (a>0)?
No
Yes
Test and set DT < period/2
DTU = √μ DT
Do β and DT have the same sign?
Yes
No
Change signs of β, G1, G3
20
R=F'(β) FB=F(β) d=F''(β)
a0 = F(β)-DTU
Are tolerances satisfied?
Yes
No
Set |Δβ| < 2/√a
β2= β+Δβ
α2 = β2/a
Use half angle reduction until α* < 1
II = number of reductions
Find F series for α*
Using II, find Fi(α) and Gi = β1Fi(α)
20
Compute and output position and velocity R(t), V(t)
Return

```
$IBFTC MC13SJ  XR3,M94,NODD,LIST
      SUBROUTINE STEPDT (T,X)                                           STPT0001
C     CONIC POSITION, VELOCITY AT TIME T                                STPT0002
C                                                                       STPT0003
C     T = TIME, SECONDS                                                 STPT0004
C     X = CARTESIAN POSITION,VELOCITY                                   STPT0005
C                                                                       STPT0006
      DOUBLE PRECISION   T     ,X(6) ,DMOD                              STPT0007
      COMMON     /STPCOM/TI    ,XI(6),SU    ,RI    ,AI    ,SA    ,DI    ,SR  STPT0008
     1                  ,PR    ,HP    ,OM    ,EP    ,R     ,G(4) ,B     ,FB  STPT0009
     2                  ,D     ,F(4)                                    STPT0010
      DOUBLE PRECISION   TI    ,XI    ,SU    ,RI    ,AI    ,SA    ,DI    ,SR  STPT0011
     1                  ,PR    ,HP    ,OM    ,EP    ,R     ,G     ,B     ,FB  STPT0012
     2                  ,D     ,F                                       STPT0013
      COMMON             C(6)                                           STPT0014
      DOUBLE PRECISION   C                                              STPT0015
      DOUBLE PRECISION   C4(10)      ,C3(10)                            STPT0016
      DATA  C4/420.,342.,272.,210.,156.,110.,72.,42.,20.,6./            STPT0017
      DATA  C3/380.,306.,240.,182.,132.,90.,56.,30.,12.,2./             STPT0018
C                                                                       STPT0019
    1 C(1) = T-TI                                                       STPT0020
      C(2) = DABS(C(1))*EP                                              STPT0021
      IF (AI.LE.0.) GO TO 2                                             STPT0022
      C(1) = DMOD(C(1),PR)                                              STPT0023
      C(3) = DABS(C(1))                                                 STPT0024
      IF (C(3).LE.HP) GO TO 2                                           STPT0025
      C(1) =-DSIGN(PR-C(3),C(1))                                        STPT0026
    2 C(4) = C(1)*SU                                                    STPT0027
      IF (B*C(1).GT.0.) GO TO 21                                        STPT0028
    3 CONTINUE                                                          STPT0029
      G(2) =-G(2)                                                       STPT0030
      G(4) =-G(4)                                                       STPT0031
      B    =-B                                                          STPT0032
      GO TO 20                                                          STPT0033
C                                                                       STPT0034
   10 IF (C(3)*SA.GT.2.D0) C(5) = DSIGN(2.D0/SA,C(5))                   STPT0035
      B = B+C(5)                                                        STPT0036
      C(6) = AI*B*B                                                     STPT0037
      II = 0                                                            STPT0038
   11 IF (DABS(C(6)).LE.1.D0) GO TO 12                                  STPT0039
      II = II+1                                                         STPT0040
      C(6) = C(6)/4.D0                                                  STPT0041
      GO TO 11                                                          STPT0042
   12 CONTINUE                                                          STPT0043
      G(3) = 1.D0/C3(1)                                                 STPT0044
      G(4) = 1.D0/C4(1)                                                 STPT0045
      DO 13 I=2,10                                                      STPT0046
      G(3) = (1.D0-C(6)*G(3))/C3(I)                                     STPT0047
   13 G(4) = (1.D0-C(6)*G(4))/C4(I)                                     STPT0048
   14 G(2) = 1.D0-C(6)*G(4)                                             STPT0049
      G(1) = 1.D0-C(6)*G(3)                                             STPT0050
      IF (II.LE.0) GO TO 15                                             STPT0051
      C(6) = C(6)*4.D0                                                  STPT0052
      II = II-1                                                         STPT0053
      G(4) = (G(3)+G(1)*G(4))/4.D0                                      STPT0054
      G(3) = G(2)*G(2)/2.D0                                             STPT0055
      GO TO 14                                                          STPT0056
   15 CONTINUE                                                          STPT0057
      G(2) = B*G(2)                                                     STPT0058
      C(5) = B*B                                                        STPT0059
      G(3) = C(5)*G(3)                                                  STPT0060
      G(4) = B*C(5)*G(4)                                                STPT0061
C                                                                       STPT0062
   20 R  = G(3)+RI*G(1)+DI*G(2)                                         STPT0063
      FB = G(4)+RI*G(2)+DI*G(3)                                         STPT0064
      D  = DI*G(1)+OM*G(2)                                              STPT0065
   21 CONTINUE                                                          STPT0066
      C(6) = C(4)-FB                                                    STPT0067
      C(3) = C(6)*D/R/2.D0+R                                            STPT0068
      C(5) = DSIGN(C(6)/C(3),C(6))                                      STPT0069
      C(3) = DABS(C(5))                                                 STPT0070
      IF (C(3).LE.DABS(B)*3.D-16) GO TO 30                              STPT0071
      IF (C(3).GT.C(2)/R) GO TO 10                                      STPT0072
C                                                                       STPT0073
   30 F(1) = 1.D0-G(3)/RI                                               STPT0074
```

```
      F(2) = C(1)-G(4)/SU                                       STPT0075
      F(3) =-SR*G(2)/R                                          STPT0076
      F(4) = 1.D0-G(3)/R                                        STPT0077
      DO 31 I=1,3                                               STPT0078
      X(I)    = F(1)*XI(I)+F(2)*XI(I+3)                         STPT0079
   31 X(I+3)  = F(3)*XI(I)+F(4)*XI(I+3)                         STPT0080
  999 RETURN                                                    STPT0081
      END
```

Subroutine: STEPI

Purpose: To compute an array, CB, of constants of the conic determined by the position and velocity R, V, for use by subroutine STEPT. (q.v.)

Calling Sequence: CALL STEPI (R,V,U,CB)

Input and Output

I/Ø	Symbolic Name or Location	Probram Dimensions	Math Symbol	Data Dimensions or Units	Definition
I	R	(3)	R_o	L	Cartesian position at the initial time, t_o.
I	V	(3)	V_o	L/T	Cartesian velocity at t_o.
I	U		u	L^3/T^2	Gravitational constant.
Ø	CB	(6)			
	CB(1)		r	L	Magnitude of R_o.
	CB(2)		a	L	Absolute value of the semi-major axis of the conic.
	CB(3)		n	1/T	Mean motion ($=\sqrt{u/a^3}$)
	CB(4)				r/a
	CB(5)				$R_o \cdot V_o/\sqrt{ua}$
	CB(6)				=1. if the conic is an ellipse =2. otherwise.

Common storages used: None

Subroutines required: FNØRM, DØT

```
$IBFTC MC13SI  NOREF,M94,NODD,XR3
CMC13SI  STEPI PERFORMS INITIALIZATION FUNCTION FOR STEPT
      SUBROUTINE STEPI(R,V,U,CB)
C  STEPI COMPUTES CB, A STORAGE VECTOR WHOSE ELEMENTS ARE
C     (1) RADIUS MAGNITUDE  R
C     (2) ABSOLUTE VALUE OF SEMI-MAJOR AXIS  ABA
C     (3) MEAN MOTION
C     (4) TIME COEFFICIENT  R/ABA
C     (5) TIME COEFFICIENT  R DOT V /SQRT(U*A)
C     (6) SWITCH 1 ELLIPSE, 2 HYPERBOLA
C     SUBROUTINES REQUIRED   DOT,FNORM
      DIMENSION   R(3),   V(3),   CB(6)
      CB(1)=FNORM(R)
      CB(2)=CB(1)/(2.-CB(1)*DOT(V,V)/U)
      IF(CB(2)) 1,1,2
1     CB(2)=-CB(2)
      CB(6)=2.
      GO TO 3
2     CB(6)=1.
3     CONTINUE
      CB(4)=CB(1)/CB(2)
      CB(3)=SQRT(U/CB(2))/CB(2)
      CB(5)=DOT(R,V)/SQRT(U*CB(2))
      RETURN
      END
```

Subroutine: STEPT

Purpose: To obtain the position and velocity of a body which is separated by a time increment from a specified state described by parameters in an array CB computed by STEPI (q.v.).

Calling Sequence: CALL STEPT (T,R,V,RR,VV,CB)

Input and Output

I/Ø	Symbolic Name or Location	Program Dimensions	Math Symbol	Data Dimensions or Units	Definition
I	T		δt	T	Incremental time.
I	R	(3)	R_o	L	Cartesian position at time t_o.
I	V	(3)	V_o	L/T	Cartesian velocity at time t_o.
Ø	RR	(3)	R	L	Cartesian position at $t_o+\delta t$.
Ø	VV	(3)	V	L/T	Cartesian velocity at $t_o+\delta t$.
I	CB	(6)			Array of constants computed by subroutine STEPI.

Common storages used: None

Subroutines required: GØTØR

Discussion

The inverse-square central force law is characterized by the equations

$$\dot{R} = \frac{dR}{dt} = V$$
$$\dot{V} = \frac{dV}{dt} = -\frac{u}{r^3} R \qquad (1)$$

where r is defined to be $\sqrt{R \cdot R}$. The angular momentum vector, H, defined by the vector cross-product

$$H = R \times V \qquad (2)$$

is a constant with respect to time, since

$$\dot{H} = \dot{R} \times V + R \times \dot{V} = V \times V + R \times \left(-\frac{u}{r^3} R\right) = 0$$

Then

$$H = H_o = R_o \times V_o$$

Because the magnitude, h_o, of H_o is generally non-zero, the plane equations

$$R \cdot H = R \cdot H_o = 0$$
$$V \cdot H = V \cdot H_o = 0 \qquad (3)$$

which follow from the definition of H, lead to the conclusion that all motion occurs in the plane normal to H_o. That is, if R_o and V_o are non-zero and non-colinear vectors, any other vectors R and V must lie in the p plane formed by R_o and V_o. Algebraically,

$$R = f R_o + g V_o$$
$$V = \dot{f} R_o + \dot{g} V_o \qquad (4)$$

The second of equations (4) follows from (1) and from the fact that R_o and V_o are not functions of the time increment, t. The scalars f, $\dot{f}$, g, and $\dot{g}$,

are functions of R_o, V_o and δt. The determination of these scalars is described below.

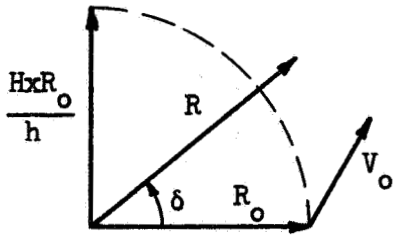

Figure 1

The vector $(H \times R_o)/h$ is perpendicular to R_o and has the same magnitude, r_o. From Figure 1, we note that R may be written as the combination

$$R = \frac{r}{r_o}\left[R_o \cos\delta + \frac{H \times R_o}{h} \sin\delta \right] \tag{5}$$

Equation (5) may be rewritten by expanding the triple cross product

$$H \times R_o = (R_o \times V_o) \times R_o = V_o(R_o \cdot R_o) - R_o(R_o \cdot V_o)$$

$$R = \frac{r}{r_o}\left[R_o\left(\cos\delta - \frac{R_o \cdot V_o}{h} \sin\delta\right) + V_o \frac{r_o^2}{h} \sin\delta \right] \tag{6}$$

Comparing equation (6) with equation (4),

$$\begin{aligned} f &= \frac{r}{r_o}\left(\cos\delta - \frac{R_o \cdot V_o}{h} \sin\delta\right) \\ g &= \frac{r r_o}{h} \sin\delta \end{aligned} \tag{7}$$

At this point, the reader should note that while r_o, $R_o \cdot V_o$, and h are computable directly from R_o and V_o, the quantities r and δ have not been specifically defined in terms of R_o, V_o, and δt. In order to do this, it

is necessary to examine the conic solution of the inverse-square law equations of motion.

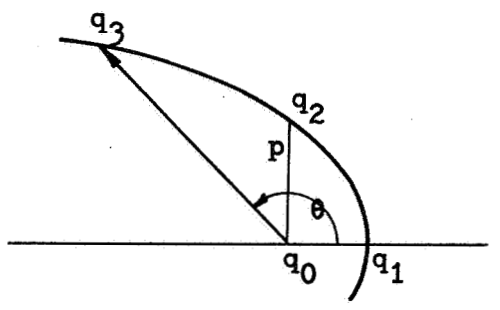

Figure 2

Figure 2 shows a conic section with focus at q_0 and pericenter at q_1. The point q_3 on the conic is specified by the polar coordinates originating at q_0, r, the radius, and θ, the true anomaly. The equation relating r, θ on a conic section is

$$r = \frac{p}{1 + e \cos \theta} \tag{8}$$

where p is the length $\overline{q_0 q_2}$, or the semi-latus rectum, and the eccentricity, e, which may be calculated from

$$e = \frac{\overline{q_0 q_2}}{q_0 q_1} - 1$$

is a parameter specifying the shape of the conic. Conic sections are characterized by eccentricity as follows:

circular	if $e = 0$
elliptic	if $0 < e < 1$
parabolic	if $e = 1$
hyperbolic	if $e > 1$

The two cases of interest here are the elliptic and hyperpolic cases. Figure 3 below shows an ellipse. The semi-major axis, a, is the distance

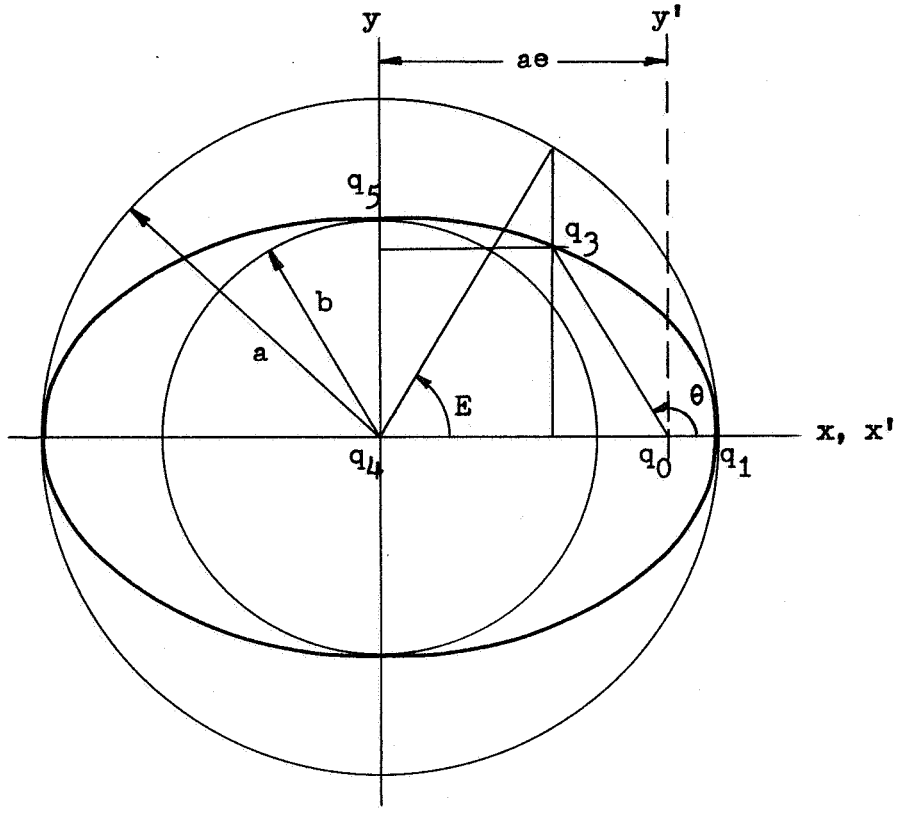

Figure 3

from the point of symmetry, q_4, to the pericenter, q_1. The semi-minor axis, b, is the length $\overline{q_4 q_5}$. The eccentricity is equal to the ratio

$$e = \sqrt{a^2 - b^2} \,/\, a$$

The eccentric anomaly, E, is the argument of the projection of the point, q_3, from the line $q_4 q_1$ onto a circle of radius a concentric with the ellipse. That is, the cartesian coordinates of q_3 relative to q_4 are

$$\begin{aligned} x &= a \cos E \\ y &= b \sin E \end{aligned} \tag{9}$$

The coordinates of q_3 relative to q_0 are

$$\begin{aligned} x' &= r \cos \theta = a(\cos E - e) \\ y' &= y = r \sin \theta = b \sin E = a \sqrt{1-e^2} \sin E \\ r &= a(1 - e \cos E) \end{aligned} \tag{10}$$

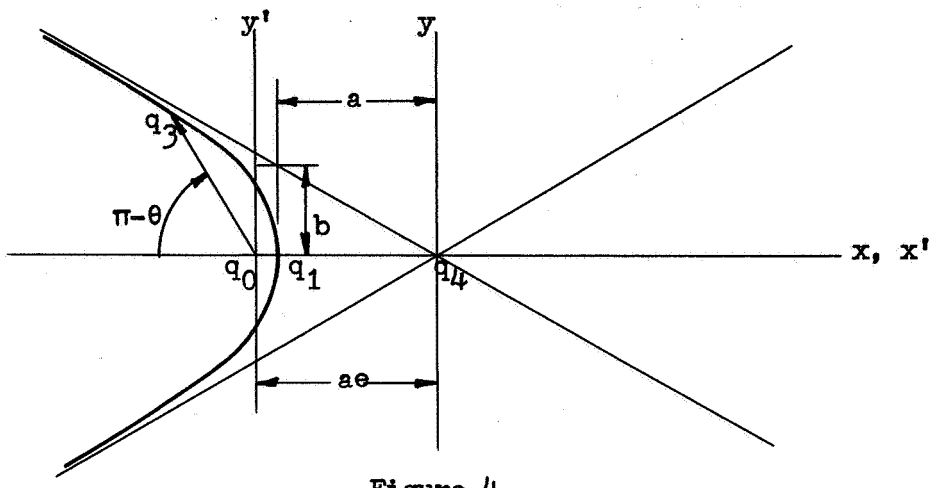

Figure 4

Figure 4 shows a hyperbola. The asymptotes are the lines $\frac{x}{a} - \frac{y}{b} = 0$ and $\frac{x}{a} + \frac{y}{b} = 0$. The semi-major axis, a, is again the distance from the point of symmetry, q_4, to the pericenter, q_1. The semi-minor axis, b, is the intercept of the asymptotes on the lines $x = \pm a$. The eccentricity is

$$e = \sqrt{a^2 + b^2} \; / \; a$$

The eccentric anomaly, E (sometimes denoted F), is so defined that the coordinates of q_3 relative to q_4 are

$$\begin{aligned} x &= -a \cosh E \\ y &= b \sinh E \end{aligned} \tag{11}$$

Then the coordinates of q_3 relative to q_0 are

$$\begin{aligned} x' &= r \cos \theta = a(e - \cosh E) \\ y' &= r \sin \theta = a\sqrt{e^2 - 1} \sinh E \\ r &= a(e \cosh E - 1) \end{aligned} \tag{12}$$

Solution of the differential equations (1) yields p, a, and e as constants of the motion. It is easily verified that

$$h = \sqrt{r_o^2 v_o^2 - (R_o \cdot V_o)^2}$$

$$p = h^2/u$$

$$a = 1/\left(\frac{2}{r_o} - \frac{v_o^2}{u} \right) \tag{13}$$

$$e^2 = 1 - p/a$$

$$n = \sqrt{u/|a^3|}$$

where we have adopted the convention that a is negative for the hyperbolic case. Some useful identities which follow from equations (10) and (12) are listed below. In equations (14) and those which follow, we use the ambiguous sign with the convention that the upper sign applies to the hyperbolic case and the lower to the elliptic case. The symbols sE and cE mean sin E and cos E for the elliptic case, but sinh E and cosh E for the hyperbolic case.

$$\frac{R \cdot V}{r} = \frac{d}{dt}(R \cdot R)^{\frac{1}{2}} = \dot{r} = \frac{ep\dot{\theta}\ \sin\theta}{(1+e\cos\theta)^2} = \frac{ue}{h} \sin\theta$$

$$\cos\theta = \frac{a}{r}(cE - e)$$

$$\sin\theta = \frac{|a|}{r}\sqrt{1 - e^2}\ \ sE = \sqrt{\frac{|a|}{u}}\frac{h}{r}\ sE \tag{14}$$

$$e\ sE = \frac{R \cdot V}{\sqrt{u|a|}}$$

$$e\ cE = 1 - r/a$$

Then, if we set

$$\alpha = E - E_o$$

it follows that

$$sE = s\alpha\ cE_o + c\alpha\ sE_o$$
$$cE = c\alpha\ cE_o \pm s\alpha\ sE_o \tag{15}$$

The angle δ of equation (5) is the incremental true anomaly on the conic section containing R_o and R. Then

$$\sin\delta = \sin(\theta - \theta_o) = s\theta\ c\theta_o - c\theta\ s\theta_o$$
$$\cos\delta = \cos(\theta - \theta_o) = c\theta\ c\theta_o + s\theta\ s\theta_o \tag{16}$$

The incremental true anomaly may now be related to R_o and V_o through substitution of equations (14) and (15) into (16).

$$\sin\delta = \mp\frac{h}{nrr_o}(sEcE_o - cEsE_o - esE + esE_o)$$
$$= \mp\frac{h}{nrr_o}(s\alpha - es\alpha cE_o - ec\alpha sE_o + esE_o)$$
$$= \mp\frac{h}{nrr_o}\left[\frac{r_o}{a}s\alpha - \frac{R_o\cdot V_o}{\sqrt{u|a|}}(c\alpha - 1)\right]$$

$$\cos\delta = \frac{a^2}{rr_o}(cEcE_o - ecE - ecE_o + e^2 \pm (e^2-1)sEsE_o)$$
$$= \frac{a^2}{rr_o}(c\alpha(1-ecE_o \pm e^2s^2E_o) \mp s\alpha esE_o(1-ecE_o) + e^2 - ecE_o)$$
$$= \frac{a^2}{rr_o}\left[c\alpha\left[\frac{r_o}{a} \pm \frac{(R_o\cdot V_o)^2}{u|a|}\right] \mp s\alpha\frac{r_o}{a}\frac{R_o\cdot V_o}{\sqrt{u|a|}} - \frac{p}{a} + \frac{r_o}{a}\right]$$
$$= \frac{a^2}{rr_o}\left[\left[\frac{r_o}{a} - \frac{(R_o\cdot V_o)^2}{ua}\right](c\alpha - 1) \mp \frac{R_o\cdot V_o}{\sqrt{u|a|}}\frac{r_o}{a}s\alpha + \frac{r_o^2}{a^2}\right]$$

The coefficients, f and g of equations (7), are finally found to be:

$$f = \frac{r}{r_o}\left(\cos\delta - \frac{R_o \cdot V_o}{h} \sin\delta \right)$$

$$= 1 + \frac{a}{r_o}(c\alpha - 1) \tag{17}$$

$$g = \frac{rr_o}{h} \sin\delta$$

$$= \mp \frac{1}{n}\left[\frac{r_o}{a} s\alpha - \frac{R_o \cdot V_o}{\sqrt{u|a|}} (c\alpha - 1) \right] \tag{18}$$

The velocity coefficients, $\dot{f}$ and $\dot{g}$, are found by noting that

$$\dot{\alpha} = \dot{E} = \sqrt{\frac{u}{|a|}} \frac{1}{r}$$

and therefore

$$\dot{f} = -\frac{\sqrt{u|a|}}{rr_o} s\alpha$$

$$\dot{g} = \frac{a}{r}\left[\frac{r_o}{a} c\alpha \pm \frac{R_o \cdot V_o}{\sqrt{u|a|}} s\alpha \right] \tag{19}$$

where

$$\frac{r}{a} = 1 - ecE$$

$$= (1 - c\alpha) + \frac{r_o}{a} c\alpha \mp \frac{R_o \cdot V_o}{\sqrt{u|a|}} s\alpha \tag{20}$$

Kepler's equation relates the incremental time, δt, to the incremental anomaly, α.

$$n\delta t = \mp (E - esE) \pm (E_o - esE_o)$$

$$= \mp (\alpha - es\alpha cE_o - ec\alpha sE_o + esE_o)$$

$$= \mp (\alpha - s\alpha) \mp \frac{r_o}{a} s\alpha \pm \frac{R_o \cdot V_o}{\sqrt{u|a|}}(c\alpha - 1) \tag{21}$$

Subroutine GØTØR is called to obtain α as a function of δt by an iterative process. GØTØR returns the vector

$$F(1) = \mp (\alpha - s\alpha)$$
$$F(2) = \mp (1 - c\alpha)$$
$$F(3) = s\alpha$$
$$F(4) = c\alpha$$

The coefficients are then calculated from

$$f = 1 - \frac{a}{r_o} F(2)$$

$$g = \delta t - \frac{1}{n} F(1)$$

$$\frac{r}{a} = F(2) + \frac{r_o}{a} F(4) + \frac{R_o \cdot V_o}{\sqrt{u|a|}} F(3)$$

$$\dot{f} = - an\, F(3)/r_o(\frac{r}{a})$$

$$\dot{g} = 1 \pm \frac{a}{r} F(2)$$

The output position and velocity are then computed from equations (4).

```
$IBFTC MC13SG  NOREF,M94,NODD,XR3
CMC13SG  STEPT (STEPD FOR TIME ONLY,NO INIT, CB(6) COMPUTED IN STEPI)
      SUBROUTINE STEPT(T,R,V,RR,VV,CB)
C     SUBROUTINES REQUIRED   GOTOR
C               CB IS A STORAGE VECTOR WHOSE ELEMENTS ARE
C     (1) RADIUS MAGNITUDE  R
C     (2) ABSOLUTE VALUE OF SEMI-MAJOR AXIS  ABA
C     (3) MEAN MOTION
C     (4) TIME COEFFICIENT  R/ABA
C     (5) TIME COEFFICIENT  R DOT V /SQRT(U*A)
C     (6) SWITCH 1 ELLIPSE, 2 HYPERBOLA
      DIMENSION R(3),   V(3),   RR(3),   VV(3),   F(4),   CB(6)
      EMDT=CB(3)*T
      K=CB(6)
      GO TO(1110,1111),K
1110  E1=EMDT
      GO TO 1112
1111  E1=0.0
1112  CONTINUE
      CALL GOTOR(K,EMDT,CB(4),F,E1)
      EF=-F(2)/CB(4)+1.
      GE=-F(1)/CB(3)+T
      ROA=F(2)+CB(4)*F(4)+CB(5)*F(3)
      EFD=-CB(2)*CB(3)*F(3)/(CB(1)*ROA)
      GED=-F(2)/ROA+1.
      DO 13 I=1,3
      RR(I)=EF*R(I)+GE*V(I)
      VV(I)=EFD*R(I)+GED*V(I)
13    CONTINUE
      RETURN
      END
```

Subroutine: STTBGN

Purpose: To initialize the data start link. Loads constants into /DATCØM/ and /MLECØM/. Optionally outputs data type identification. Reads overlay data.

Calling Sequence: CALL STTBGN

Common storages used: /DATCØM/,/DCPCØM/,/EDTCØM/,/ESTCØM/,/MLECØM/

Subroutines required: DMVTRN,ØVRLYD

Output Control:

NSTTG =	0	No output
	≥ 1	Output receiving station and central body names
	≥ 2	Output measurement system identification
	≥ 3	Output measurement names, units, biases, variances, and doppler parameters.

```
$IBFTC MC13G5  XR3,M94,NODD,LIST
      SUBROUTINE STTBGN                                                 STBG0001
C     INITIALIZES DATA START LINK                                       STBG0002
C                                                                       STBG0003
      COMMON              /DCPCOM/CDCP(900)                             STBG0004
      DOUBLE PRECISION     DCDCP(450) ,SN(13,20) ,STIMR(2)              STBG0005
      DIMENSION            CBODY(8,11),NPROC(22)                        STBG0006
      EQUIVALENCE                (CDCP(758),INDSTA) ,(CDCP(732),NPROVR) STBG0007
     1                           ,(CDCP(757),ITRSTA) ,(CDCP(682),NSTTG ) STBG0008
     2     ,(CDCP( 17),CBODY ) ,(CDCP(798),KAUTO ) ,(CDCP(143),SN    ) STBG0009
     3     ,(CDCP(  1),DCDCP ) ,(CDCP(787),NPOINT) ,(CDCP(781),STIMR ) STBG0010
     4     ,(CDCP(777),ICB   ) ,(CDCP(731),NPROC )                    STBG0011
C                                                                       STBG0012
      COMMON              /ESTCOM/CEST(804)                             STBG0013
      DOUBLE PRECISION     EFEDAN(14),SE(14,20)                         STBG0014
      EQUIVALENCE         (CEST( 61),EFEDAN) ,(CEST(245),SE    )       STBG0015
     1                   ,(CEST(  2),NBY   )                            STBG0016
C                                                                       STBG0017
      COMMON              /EDTCOM/INDDAT(40),BUFDAT(85,6)               STBG0018
      DOUBLE PRECISION     DATIND(20) ,DRANGE ,ONTIME                   STBG0019
      EQUIVALENCE         (INDDAT( 1),DATIND) ,(INDDAT( 3),NRSTA )      STBG0020
     1                   ,(INDDAT(27),DRANGE) ,(INDDAT( 4),NTSTA )      STBG0021
     2                   ,(INDDAT(12),KTAU  ) ,(INDDAT(13),ONTIME)      STBG0022
     3                   ,(INDDAT( 8),MTYPE )                           STBG0023
C                                                                       STBG0024
      COMMON              /DATCOM/BIAS (2) ,OBS (64) ,FTR       ,OMEGA  STBG0025
     1                          ,SPDLT    ,STA (10) ,TAU       ,TB2CO(18) STBG0026
     2                          ,TB2CT(18),TT2BO(9) ,TT2BT(9) ,XV   (12) STBG0027
     3                          ,MLT      ,MODE     ,MSTA      ,MTIM   STBG0028
     4                          ,NALIGN   ,NANG     ,NFRAC             STBG0029
      DOUBLE PRECISION     BIAS  ,OBS   ,FTR   ,OMEGA ,SPDLT ,STA      STBG0030
     1                    ,TAU   ,TB2CO ,TB2CT ,TT2BO ,TT2BT ,XV       STBG0031
C                                                                       STBG0032
      COMMON              /MLECOM/CMLE(1070)                            STBG0033
      DOUBLE PRECISION     AMU  ,OBIAS(2) ,Q (4) ,STBIAS(2)             STBG0034
     1                    ,CTAU           ,QI(4) ,YMOD  (4)            STBG0035
      DIMENSION            ILBS(12,4) ,LBALG(2) ,LBTAU(2)               STBG0036
     1                    ,ILBM(12,4) ,LBM (12) ,LBTYP(5)              STBG0037
     2                    ,INROT(3,4) ,LBS (12) ,NROT (4)              STBG0038
      LOGICAL              ILMEAS(4,4),LMEAS(4)                         STBG0039
      EQUIVALENCE                                 (CMLE(432),NPTSTT)   STBG0040
     1                           ,(CMLE(405),LAUTO ) ,(CMLE(423),NROT  ) STBG0041
     2     ,(CMLE(363),AMU   ) ,(CMLE(555),LBALG ) ,(CMLE( 31),OBIAS ) STBG0042
     3     ,(CMLE(365),CTAU  ) ,(CMLE(557),LBDPL ) ,(CMLE( 47),Q     ) STBG0043
     4     ,(CMLE(435),ILBM  ) ,(CMLE(531),LBM   ) ,(CMLE( 55),QI    ) STBG0044
     5     ,(CMLE(483),ILBS  ) ,(CMLE(543),LBS   ) ,(CMLE( 27),STBIAS) STBG0045
     6     ,(CMLE(381),ILMEAS) ,(CMLE(558),LBTAU ) ,(CMLE(  2),TFINAL) STBG0046
     7     ,(CMLE(411),INROT ) ,(CMLE(560),LBTYP ) ,(CMLE(  1),TSTART) STBG0047
     8     ,(CMLE(433),IQUAL ) ,(CMLE(397),LMEAS ) ,(CMLE(207),YMOD  ) STBG0048
C                                                                       STBG0049
  601 FORMAT(1H0,A6,23H IS USED FOR DATA START,60X,A6,16H IS CENTRAL BODSTBG0050
     1Y)                                                                STBG0051
  602 FORMAT(14H0DATA TYPE IS ,A6)                                      STBG0052
  603 FORMAT(/16X,4HTYPE,19X,5HUNITS,11X,4HBIAS,26X,8HVARIANCE/1H )     STBG0053
  604 FORMAT(12X,I1,3H - ,2A6,11X,A6,2(E22.8,8X))                       STBG0054
  605 FORMAT(12X,18HX-AXIS IS ALIGNED ,A3)                              STBG0055
  606 FORMAT(12X,18HRANGE AMBIGUITY IS,D31.16)                          STBG0056
  607 FORMAT(/9X,7HDOPPLER/12X,A6,9H FIXED AT,D30.16/12X,25HTRANS FREQ  STBG0057
     1  = ,D30.16/12X,15HREFRCT COEF   =,2D30.16/12X,15HBIAS FREQ     =,STBG0058
     2D30.16/12X,15HRETRNS RATIO  =,D30.16)                             STBG0059
  608 FORMAT(/9X,17HTRANS STATION IS ,A6)                               STBG0060
C                                                                       STBG0061
C     READ OVERLAY DATA AND SET CONSTANTS                               STBG0062
    1 IF (NPROVR.NE.0) CALL OVRLYD(CDCP)                                STBG0063
      NPROVR = 0                                                        STBG0064
C     SET UP DATCOM                                                     STBG0065
      MLT     = 2                                                       STBG0066
      MODE    = INDDAT(10)                                              STBG0067
      MSTA    = 2                                                       STBG0068
      MTIM    = 2                                                       STBG0069
      NALIGN  = INDDAT( 9)                                              STBG0070
      NFRAC   = 1                                                       STBG0071
      NANG    = 1                                                       STBG0072
      FTR     = DATIND(11)                                              STBG0073
      OMEGA   = CBODY(8,3)                                              STBG0074
```

```
      SPDLT    = DCDCP(8)+SE(8,INDSTA)                                STBG0075
      TAU      = DATIND(10)                                           STBG0076
      BIAS(1) = DATIND(15)+SE(10,INDSTA)/TAU                          STBG0077
      BIAS(2) = DATIND(16)                                            STBG0078
      DO 2 I=1,9                                                      STBG0079
      TT2BO(I) = SN(I+4,INDSTA)                                       STBG0080
    2 TT2BT(I) = SN(I+4,ITRSTA)                                       STBG0081
      CALL DMVTRN (TT2BO,SE(1,INDSTA),STA(1),1,1)                     STBG0082
      CALL DMVTRN (TT2BT,SE(1,ITRSTA),STA(6),1,1)                     STBG0083
      DO 3 I=1,3                                                      STBG0084
      STA(I)    = SN(I+1,INDSTA)+STA(I)                               STBG0085
    3 STA(I+5) = SN(I+1,ITRSTA)+STA(I+5)                              STBG0086
      STA( 4) = DATIND(12)                                            STBG0087
      STA( 5) = DATIND(13)                                            STBG0088
      STA( 9) = STA(4)                                                STBG0089
      STA(10) = STA(5)                                                STBG0090
      JJ = MTYPE                                                      STBG0091
      GO TO (4,7,6,5) ,MTYPE                                          STBG0092
    4 MODE = 0                                                        STBG0093
    5 NALIGN = 0                                                      STBG0094
      GO TO 7                                                         STBG0095
    6 IF (NALIGN.EQ.1) JJ = 2                                         STBG0096
    7 CONTINUE                                                        STBG0097
C     SET UP MLECOM                                                   STBG0098
   10 TSTART = 0.                                                     STBG0099
      TFINAL = 0.                                                     STBG0100
      IF (STIMR(1).GT.0.) TSTART = STIMR(1)-ONTIME                    STBG0101
      IF (STIMR(2).GT.0.) TFINAL = STIMR(2)-ONTIME                    STBG0102
      ICB = MOD(NBY,100)                                              STBG0103
      CTAU  = TAU                                                     STBG0104
      AMU   = EFEDAN(ICB)                                             STBG0105
      NPTSTT = NPOINT                                                 STBG0106
      DO 11 I=1,4                                                     STBG0107
      Q(4)  = SE(I+10,INDSTA)                                         STBG0108
      Q(I) = Q(4)*Q(4)                                                STBG0109
      QI(I) = 1.D0/Q(I)                                               STBG0110
      OBIAS(I) = SE(I+6,INDSTA)                                       STBG0111
      LMEAS(I) = ILMEAS(I,MTYPE)                                      STBG0112
      IF (NPROC(I+13).NE.0) LMEAS(I) = .FALSE.                        STBG0113
   11 CONTINUE                                                        STBG0114
      OBIAS(4) = 0.D0                                                 STBG0115
      STBIAS(1) = SE(4,INDSTA)                                        STBG0116
      STBIAS(2) = SE(5,INDSTA)                                        STBG0117
      YMOD(3) = DRANGE                                                STBG0118
      IQUAL = 0                                                       STBG0119
      IF (.NOT.LMEAS(3)) IQUAL = 2                                    STBG0120
      IF (.NOT.LMEAS(4)) IQUAL = IQUAL+4                              STBG0121
      DO 12 I=1,3                                                     STBG0122
   12 NROT(I) = INROT(I,JJ)                                           STBG0123
      NROT(4) = JJ                                                    STBG0124
      LAUTO   = KAUTO                                                 STBG0125
      DO 13 I=1,12                                                    STBG0126
      LBS(I) = ILBS(I,MTYPE)                                          STBG0127
   13 LBM(I) = ILBM(I,MTYPE)                                          STBG0128
      IF (MODE.NE.3) GO TO 14                                         STBG0129
      LBM(8) = LBDPL                                                  STBG0130
      LBS(8) = LBDPL                                                  STBG0131
   14 CONTINUE                                                        STBG0132
C                                                                     STBG0133
C     OUTPUT DATA TYPE IDENTIFICATION                                 STBG0134
   20 IF (NSTTG.EQ.0) GO TO 999                                       STBG0135
      WRITE (6,601) NRSTA,CBODY(1,ICB)                                STBG0136
      IF (NSTTG.EQ.1) GO TO 999                                       STBG0137
      WRITE (6,602) LBTYP(MTYPE)                                      STBG0138
      IF (NSTTG.EQ.2) GO TO 999                                       STBG0139
      WRITE (6,603)                                                   STBG0140
      DO 21 I=1,4                                                     STBG0141
      IF (.NOT.LMEAS(I)) GO TO 21                                     STBG0142
      WRITE (6,604) I,LBM(I),LBM(I+4),LBM(I+8),OBIAS(I),Q(I)          STBG0143
   21 CONTINUE                                                        STBG0144
      IF (NALIGN.NE.0) WRITE (6,605) LBALG(NALIGN)                    STBG0145
      IF (LMEAS(3))    WRITE (6,606) DRANGE                           STBG0146
      IF (MODE.EQ.0)   GO TO 999                                      STBG0147
      WRITE (6,607)    LBTAU(KTAU+1),TAU,FTR,STA(4),STA(5),BIAS       STBG0148
      IF (MODE.EQ.3)   WRITE (6,608) NTSTA                            STBG0149
C
  999 RETURN
      END
```

Subroutine: STTDAT

Purpose: To choose the data which is to be used for a data start. This data is selected from the points on the edited data tape according to a number of input options, and placed in the array DATA of MLECØM.

Calling Sequence: CALL STTDAT

Common storages used: //13 cells,/DCPCØM/,/EDTCØM/,/MLECØM/

Subroutines required: DATØUP

Discussion:

The following quantities are output from STTDAT into MLEØOM

DATA(5,100)	DATA(1,I) is a time T, in seconds from ØNTIME. DATA(M + 1, I) is measurement M at time T.
NPTS	Number of points loaded into DATA. Points are loaded from BUFDAT and all points with a "bad quality" indicator or with all negative measurements are skipped. In addition, if TFINAL has been set, only points with T < TFINAL are used.
LAUTØ	LAUTØ determines whether or not an automatic new data start is to be allowed if the fit using the present data fails. LAUTØ is set .FALSE. (no new start) if all available data is used, or if TFINAL > 0. (On entry to STTDAT, LAUTØ equals KAUTØ, an input switch.)

STTDAT requires that, on entry, the edited data tape must be positioned at the end of the record pair currently given in /EDTCØM/. The tape and /EDTCØM/ are reset to this condition before returning from STTDAT.

```
$IBFTC MC13D5  XR3,M94,NODD,LIST
      SUBROUTINE STTDAT                                                 STDT0001
C     LOADS WORKING DATA ARRAY FROM DATA TAPE BUFFER                    STDT0002
C                                                                       STDT0003
      COMMON            /DCPCOM/CDCP(900)                               STDT0004
      EQUIVALENCE       (CDCP(795),MAXPTS) ,(CDCP(680),NSTTD )          STDT0005
     1                 ,(CDCP(796),MINPTS)                              STDT0006
C                                                                       STDT0007
      COMMON            /EDTCOM/INDDAT(40),BUFDAT(85,6)                 STDT0008
      DOUBLE PRECISION   ONTIME                                         STDT0009
      EQUIVALENCE                (INDDAT( 8),MTYPE ) ,(INDDAT( 6),NPTS  )STDT0010
     1    ,(INDDAT( 7),KONT  ) ,(INDDAT( 2),NEOT  ) ,(INDDAT(13),ONTIME)STDT0011
C                                                                       STDT0012
      COMMON            /MLECOM/CMLE(1070)                              STDT0013
      DIMENSION          DATA(5,100) ,LBM(12)                           STDT0014
      LOGICAL            LAUTO                                          STDT0015
      EQUIVALENCE       (CMLE(570),DATA  ) ,(CMLE(433),QUAL  )          STDT0016
     1                 ,(CMLE(405),LAUTO ) ,(CMLE(  2),TFINAL)          STDT0017
     2                 ,(CMLE(531),LBM   ) ,(CMLE(  1),TSTART)          STDT0018
     3                 ,(CMLE(432),NPTSTT)                              STDT0019
C                                                                       STDT0020
      COMMON             SAVE(10),TP(3)                                 STDT0021
      DATA  IBLK /6H                                                    STDT0022
     1    /,NO   /6HNO    /                                             STDT0023
C                                                                       STDT0024
  601 FORMAT(19H1DATA SPECIFICATION,10X,A3,78HAUTOMATIC NEW DATA START ASTDT0025
     1LLOWED IF THIS DATA DOES NOT YIELD STARTING ESTIMATE)             STDT0026
  602 FORMAT(39H0OBSERVATION TIMES REFERRED TO ONTIME =,D24.16,4H SEC)  STDT0027
  603 FORMAT(/12X,13HSTARTING TIME,6X,1H=,E20.8,4H SEC)                 STDT0028
  604 FORMAT(12X,10HFINAL TIME,9X,1H=,E20.8,4H SEC)                     STDT0029
  605 FORMAT(12X,26HNUMBER OF POINTS SPECIFIED,8X,1H=,I5/12X,35HMINIMUM STDT0030
     1NUMBER OF POINTS ALLOWED  =,I5/12X,35HMAXIMUM NUMBER OF POINTS ALLSTDT0031
     2OWED  =,I5)                                                       STDT0032
  606 FORMAT(/5X,38HAUTOMATIC NEW DATA OPTION SWITCHED OFF/5X,28HLAST ALSTDT0033
     1LOWABLE POINT REACHED)                                            STDT0034
  607 FORMAT(20H0   * NO DATA LOADED)                                   STDT0035
  608 FORMAT(36H0    DATA (NEGATIVE VALUES NOT USED)//5X,2HPT,8X,4HTIME,STDT0036
     18X,4(11X,2A6))                                                    STDT0037
  609 FORMAT(4X,I3,E20.8,4E23.8)                                        STDT0038
C                                                                       STDT0039
C     SET SWITCHES AND OUTPUT DATA IDENTIFICATION                       STDT0040
    1 CONTINUE                                                          STDT0041
      ASSIGN 12 TO N1                                                   STDT0042
      N = 2                                                             STDT0043
      IF (NSTTD.EQ.0)    GO TO 10                                       STDT0044
      I = NO                                                            STDT0045
      IF (LAUTO) I=IBLK                                                 STDT0046
      WRITE (6,601) I                                                   STDT0047
      WRITE (6,602) ONTIME                                              STDT0048
      CALL DATOUP (ONTIME,TP,0)                                         STDT0049
      WRITE (6,603) TSTART                                              STDT0050
      IF (TFINAL.EQ.0.)  GO TO 2                                        STDT0051
      WRITE (6,604) TFINAL                                              STDT0052
    2 WRITE (6,605) NPTSTT,MINPTS,MAXPTS                                STDT0053
C                                                                       STDT0054
C     LOAD DATA FROM EDTCOM                                             STDT0055
   10 IF (NPTSTT.GT.MAXPTS) NPTSTT=MAXPTS                               STDT0056
      IF (NPTSTT.LT.MINPTS) NPTSTT=MINPTS                               STDT0057
      J = 0                                                             STDT0058
   11 CONTINUE                                                          STDT0059
      DO 19 K=1,NPTS                                                    STDT0060
      TP = BUFDAT(K,2)                                                  STDT0061
      GO TO N1, (12,13,14)                                              STDT0062
C     FIRST POINT TO BE USED                                            STDT0063
   12 IF (TP.LT.TSTART) GO TO 19                                        STDT0064
      ASSIGN 14 TO N1                                                   STDT0065
      IF (TFINAL.EQ.0.) GO TO 14                                        STDT0066
C     FINAL TIME SPECIFIED                                              STDT0067
      ASSIGN 13 TO N1                                                   STDT0068
   13 IF (TP.GT.TFINAL) GO TO 30                                        STDT0069
C     IS THIS SET TO BE USED                                            STDT0070
   14 IF (BUFDAT(K,1).EQ.0.)   GO TO 15                                 STDT0071
      IF (BUFDAT(K,1).NE.QUAL) GO TO 19                                 STDT0072
   15 DO 16 I=1,4                                                       STDT0073
      IF (BUFDAT(K,I+2).GE.0.) GO TO 17                                 STDT0074
```

```
   16 CONTINUE                                                          STDT0075
      GO TO 19                                                          STDT0076
C     USE THIS POINT                                                    STDT0077
   17 CONTINUE                                                          STDT0078
      J = J+1                                                           STDT0079
      DO 18 I=1,5                                                       STDT0080
   18 DATA(I,J) = BUFDAT(K,I+1)                                         STDT0081
      IF (J.GE.NPTSTT)   GO TO 34                                       STDT0082
   19 CONTINUE                                                          STDT0083
C                                                                       STDT0084
C     BUFDAT IS EXHAUSTED, RELOAD FROM TAPE                             STDT0085
   20 N = N+1                                                           STDT0086
      READ (10) INDDAT                                                  STDT0087
      IF (NEOT.NE.0)     GO TO 30                                       STDT0088
      IF (KONT.EQ.0)     GO TO 30                                       STDT0089
      N = N+1                                                           STDT0090
      READ (10) BUFDAT                                                  STDT0091
      GO TO 11                                                          STDT0092
C                                                                       STDT0093
C     LAST ALLOWABLE POINT REACHED                                      STDT0094
   30 CONTINUE                                                          STDT0095
      IF (.NOT.LAUTO)    GO TO 32                                       STDT0096
      IF (NSTTD.NE.0)    WRITE (6,606)                                  STDT0097
      LAUTO = .FALSE.                                                   STDT0098
   32 NPTSTT = J                                                        STDT0099
C     REPOSITION DATA TAPE                                              STDT0100
   34 CONTINUE                                                          STDT0101
      IF (N.EQ.2)   GO TO 40                                            STDT0102
      DO 35 I=1,N                                                       STDT0103
   35 BACKSPACE 10                                                      STDT0104
      READ (10) INDDAT                                                  STDT0105
      READ (10) BUFDAT                                                  STDT0106
C                                                                       STDT0107
C     OUTPUT DATA SUMMARY                                               STDT0108
   40 CONTINUE                                                          STDT0109
      IF (NPTSTT.NE.0)   GO TO 41                                       STDT0110
      WRITE (6,607)                                                     STDT0111
      GO TO 999                                                         STDT0112
   41 IF (NSTTD.LT.2)    GO TO 999                                      STDT0113
      WRITE (6,608) (LBM(I),LBM(I+4),I=1,4)                             STDT0114
      DO 42 J=1,NPTSTT                                                  STDT0115
   42 WRITE (6,609) J,(DATA(I,J),I=1,5)                                 STDT0116
C                                                                       STDT0117
  999 RETURN                                                            STDT0118
      END
```

Subroutine: STTEND

Purpose: To store maximum likelihood estimate as the current state estimate.

Calling Sequence: CALL STTEND

Common storages used: //13 cells,/DCPCØM/,/ESTCØM/,/ES1CØM/,/MLECØM/

Subroutines required: DATØUP,STEPDI,STEPDT

Usage:

STTEND accepts the maximum likelihood estimate of vehicle position and velocity, X1, at the epoch ETIMV1, shifts the estimate along a conic section to the desired spoch, ETIMVE, and stores the vehicle state as the current estimate,SPCDAN. It assumes X1 in C-frame components relative to the central body ICB.

If it is desired to store the new estimate on the estimate tape, the covariance matrix and state indices are taken from the scratch tape, unit 9. Some care is required in using the data start following estimation of the state, since correlations between vehicle state and other parameters will be retained, though meaningless.

```
$IBFTC MC13S5  XR3,M94,NODD,LIST
      SUBROUTINE STTEND                                                 STEN0001
C     STORES AND OUTPUTS STATE ESTIMATE                                 STEN0002
C                                                                       STEN0003
      COMMON              /DCPCOM/CDCP(900)                             STEN0004
      DOUBLE PRECISION     DATEV1(3) ,ETIMVE                            STEN0005
      DIMENSION            CBODY(8,11)                                  STEN0006
      EQUIVALENCE         (CDCP( 17),CBODY ) ,(CDCP(740),NPREST)        STEN0007
     1                   ,(CDCP(801),DATEV1) ,(CDCP(742),NPRSTO)        STEN0008
     2                   ,(CDCP(785),ETIMVE) ,(CDCP(685),NSTTS )        STEN0009
     3                   ,(CDCP(777),ICB    )                           STEN0010
C                                                                       STEN0011
      COMMON              /ESTCOM/CEST(804)                             STEN0012
      DOUBLE PRECISION     ETIMVA ,SPCDAN(6)                            STEN0013
      EQUIVALENCE         (CEST( 29),ETIMVA) ,(CEST(  1),NESPOS)        STEN0014
     1                   ,(CEST(  2),NBY    ) ,(CEST( 49),SPCDAN)       STEN0015
C                                                                       STEN0016
      COMMON              /MLECOM/CMLE(1070)                            STEN0017
      DOUBLE PRECISION     AMU ,ETIMV1 ,XA1(6)                          STEN0018
      EQUIVALENCE         (CMLE(363),AMU    ) ,(CMLE(111),XA1    )      STEN0019
     1                   ,(CMLE( 11),ETIMV1)                            STEN0020
C                                                                       STEN0021
      COMMON              /ES1COM/DEST(2214)                            STEN0022
C                                                                       STEN0023
      COMMON               SAVE(10),TP(3)                               STEN0024
C                                                                       STEN0025
  600 FORMAT(58H1FINAL STATE ESTIMATE IN C-FRAME COORDINATES, RELATIVE TSTEN0026
     10 ,A6/12HOAT ETIMV = ,D24.16,4H SEC)                              STEN0027
  601 FORMAT(1H )                                                       STEN0028
  602 FORMAT(45X,2HX(,I1,3H) =,D24.16)                                  STEN0029
  603 FORMAT(28HONOT STORED ON ESTIMATE TAPE)                           STEN0030
  604 FORMAT(35HOSTORED ON TAPE AS ESTIMATE NUMBER ,I4)                 STEN0031
C                                                                       STEN0032
C     SHIFT ESTIMATE TO DESIRED EPOCH                                   STEN0033
    1 DO 2 I=1,3                                                        STEN0034
    2 TP(I) = DATEV1(I)                                                 STEN0035
      CALL DATINP (TP,ETIMVE)                                           STEN0036
      IF (ETIMV1.EQ.ETIMVE) GO TO 10                                    STEN0037
      CALL STEPDI (ETIMV1,XA1,AMU)                                      STEN0038
      CALL STEPDT (ETIMVE,XA1)                                          STEN0039
C                                                                       STEN0040
C     LOAD ESTIMATE INTO ESTCOM                                         STEN0041
   10 NBY = ICB                                                         STEN0042
      ETIMVA = ETIMVE                                                   STEN0043
      DO 11 I=1,6                                                       STEN0044
   11 SPCDAN(I) = XA1(I)                                                STEN0045
C                                                                       STEN0046
C     OUTPUT ESTIMATE                                                   STEN0047
   20 IF (NSTTS.EQ.0)     GO TO 30                                     STEN0048
      WRITE (6,600) CBODY(1,ICB),ETIMVA                                 STEN0049
      CALL DATOUP (ETIMVA,TP,0)                                         STEN0050
      WRITE (6,601)                                                     STEN0051
      WRITE (6,602) (I,XA1(I),I=1,6)                                    STEN0052
C                                                                       STEN0053
C     STORE ESTIMATE ON TAPE                                            STEN0054
   30 IF (NPRSTO.NE.0)    GO TO 31                                     STEN0055
      WRITE (6,603)                                                     STEN0056
      GO TO 999                                                         STEN0057
   31 IF (NPREST.EQ.0)    GO TO 32                                     STEN0058
      READ  (12) SKIP                                                   STEN0059
      NPREST = 0                                                        STEN0060
   32 READ  ( 9) DEST                                                   STEN0061
      BACKSPACE 9                                                       STEN0062
      NN = NESEND-NESPOS                                                STEN0063
      IF (NN.LE.0)        GO TO 35                                      STEN0064
      DO 34 I=1,NN                                                      STEN0065
      READ  (12) SKIP                                                   STEN0066
   34 READ  (12) SKIP                                                   STEN0067
   35 NESEND = NESEND+1                                                 STEN0068
      NESPOS = NESEND                                                   STEN0069
      WRITE (12) CEST                                                   STEN0070
      WRITE (12) DEST                                                   STEN0071
      WRITE (6,604) NESPOS                                              STEN0072
C                                                                       STEN0073
  999 RETURN                                                            STEN0074
      END
```

Subroutine: STTFIT

Purpose: To compute smoothed values of measurements and their time derivatives by making a least square polynomial fit for each measurement. An error return (IERR = 15) will occur unless a fit can be found for each measurement.

Calling Sequence: CALL STTFIT

Common storages used: //256 cells,/DCPCØM/,/MLECØM/

Subroutines required: DINVRT,DMPLY

Method - Theoretical

Given a number of data values y_j at times t_j, $j = 1, 2, \ldots, k$, we wish to find the coefficients a_i of an Nth degree polynomial

$$\hat{y}(t) = a_0 + a_1(t - \bar{t}) + a_2(t - \bar{t})^2 + \ldots$$

which fits the data in the least square sense.

For a given reference time, t, we set

$$\Delta t_j = t_j - \bar{t}$$

and define the matrices

$$A = \mathrm{col}(a_0, a_1, \ldots, a_N)$$

$$Y = \mathrm{col}(y_1, y_2, \ldots, y_k)$$

$$\hat{Y} = \mathrm{col}(\hat{y}(t_1), \hat{y}(t_2) \ldots, \hat{y}(t_k))$$

$$TM = \begin{bmatrix} 1 & \Delta t_1 & \Delta t_1^2 & \ldots & \Delta t_1^N \\ 1 & \Delta t_2 & \Delta t_2^2 & \ldots & \Delta t_2^N \\ \vdots & \vdots & & & \\ 1 & \Delta t_k & \Delta t_k^2 & \ldots & \Delta t_k^N \end{bmatrix}$$

Using

$$Y = TM \cdot A$$

the A which minimizes $||Y - \hat{Y}||$ is

$$A = (TM^T \cdot TM)^{-1} \, TM^T \cdot Y$$

at $t = \bar{t}$,

$$\hat{Y}(\bar{t}) = a_0$$

$$\frac{d}{dt}\hat{Y}(t) = a_1$$

For each measurement type, we accept the solution A if the mean square of the residuals satisfies

$$||Y - \hat{Y}||^2 \leq (\text{FITLEV}) \cdot (\text{variance of the measurement})$$

where FITLEV is an appropriate constant. The coefficients a_0, a_1 for the Mth measurement type are returned in CØEF(1,M) and CØEF(2,M).

<u>Method - Computational</u>

The following quantities are computed:

TMEAN $= \bar{t} =$ (DATA(1,1) + DATA(1,NPTS))/2.

JM = index in DATA of first time point < TMEAN, unless TFIT ≠ 0. If TFIT ≠ 0, then fit starts with the first time point < TFIT(=DATA(1,JM)), and considers only points with time > TFIT.

NB = First row of TM to be computed.

If TFIT ≠ 0, NB = 1, and rows 1 through NFPTS (=k) of TM are computed. If TFIT = 0, NB = NFPTS/2 + 1 and rows NB through NFPTS are computed using data starting at DATA(1,JM). <u>Then</u> rows NB - 1 through 1 are computed, running backwards through DATA from DATA(1, JM - 1).

If at any time in the above computation the program runs out of time points, an error exit is taken. The process of forming TM, Y, and loading CØEF is performed separately for each measurement type M for which LMEAS(M) is .TRUE. Since measurements with negative values in DATA are skipped, an error exit (IERR = 15) will occur if any one of the measurement types fails to find enough data.

If a fit is found (that is, sufficient data to form TM was available) but does not pass the residual test, a retry may be made. If TFIT and TMEAN both = 0 (so that the reference point $\bar{t}$ is not fixed by the calling program), then MFTRY new tries are allowed. Each new try is made with the reference point $\bar{t}$ moved alternately backwards or forwards NERR time points (in DATA) from the last referenced point.

```
$IBFTC MC13F5  XR3,M94,NODD,LIST
      SUBROUTINE STTFIT                                                 STFT0001
C     COMPUTES MEASUREMENT AND MEASUREMENT RATES                        STFT0002
C     FROM POLYNOMIAL FIT                                               STFT0003
C                                                                       STFT0004
      COMMON              /DCPCOM/CDCP(900)                             STFT0005
      DIMENSION            NSCTRL(14)                                   STFT0006
      DOUBLE PRECISION     TFIT                                         STFT0007
      EQUIVALENCE         (CDCP(833),FITLEV) ,(CDCP(787),NSCTRL)        STFT0008
     1                   ,(CDCP(111),IERR  ) ,(CDCP(681),NSTTF )        STFT0009
     2                                       ,(CDCP(825),TFIT  )        STFT0010
      EQUIVALENCE         (NSCTRL( 6),MFTRY ) ,(NSCTRL( 2),NFPTS )      STFT0011
     1                   ,(NSCTRL( 5),NFERR ) ,(NSCTRL( 3),NFSKIP)      STFT0012
     2                   ,(NSCTRL( 4),NFPOLY)                           STFT0013
C                                                                       STFT0014
      COMMON              /MLECOM/CMLE(1070)                            STFT0015
      DOUBLE PRECISION     COEF(2,4) ,Q(4) ,TMEAN                       STFT0016
      DIMENSION            DATA(5,100) ,LBM(12)                         STFT0017
      LOGICAL              LMEAS(4)                                     STFT0018
      EQUIVALENCE                (CMLE(531),LBM   ) ,(CMLE( 47),Q     )STFT0019
     1    ,(CMLE(347),COEF  ) ,(CMLE(397),LMEAS ) ,(CMLE(  3),TMEAN )  STFT0020
     2    ,(CMLE(570),DATA  ) ,(CMLE(432),NPTSTT)                      STFT0021
C                                                                       STFT0022
      COMMON   SAVE(20) ,RMS(4) ,TST(4) ,POLY(10) ,TMT(10,10) ,TPM(10) STFT0023
      DOUBLE PRECISION   POLY ,RMS ,TMT ,TPM ,TST                       STFT0024
C                                                                       STFT0025
C     MAXIMUM VALUE FOR NFPOLY = 10                                     STFT0026
C     MAXIMUM VALUE FOR MAXPTS = 30                                     STFT0027
C                                                                       STFT0028
      DOUBLE PRECISION   TM(30,10) ,FITYH(30) ,FITYR(30) ,TP            STFT0029
      DIMENSION          NP(30)    ,FITY (30) ,FITT (30) ,LBPOLY(10)    STFT0030
      DATA  LBPOLY/2HA0 ,2HA1 ,2HA2 ,2HA3 ,2HA4                         STFT0031
     1            ,2HA5 ,2HA6 ,2HA7 ,2HA8 ,2HA9 /                       STFT0032
C                                                                       STFT0033
  601 FORMAT(71H1POLYNOMIAL FITS USED TO OBTAIN SMOOTHED VALUES OF DATA STFT0034
     1AND THEIR RATES/15H0   PTS USED = I3,11X,20HPOLYNOMIAL DEGREE = I2STFT0035
     2,11X,14HPTS SKIPPED = I3,9X,18HFIT TEST FACTOR = E16.8)           STFT0036
  602 FORMAT(12H0   TMEAN = D31.16,4H SEC,12X,18HFIT TRIAL COUNT = I3,9XSTFT0037
     1,16HMAX NO TRIALS = I4)                                           STFT0038
  603 FORMAT(//9X,2A6,48H POLYNOMIAL = A0 + A1*T + A2*T**2 + A3*T**3 +..STFT0039
     1.//(2X,3(7X,A5,1H=,D24.16)))                                      STFT0040
  604 FORMAT(/9X,2HPT,8X,4HTIME,19X,10HOBSERVABLE,13X,16HPOLYNOMIAL VALUSTFT0041
     1E,14X,8HRESIDUAL/(8X,I3,E20.8,E23.8,2D31.16))                     STFT0042
  605 FORMAT(/9X,22HRESIDUAL MEAN SQUARE =,D24.16,14X,16HFIT TEST LEVEL STFT0043
     1=,D24.16)                                                         STFT0044
  606 FORMAT(///15H SUMMARY OF FIT)                                     STFT0045
  607 FORMAT(/22X,13HFITTED VALUES,13X,5HRATES,21X,20HRESIDUAL MEAN SQUASTFT0046
     1RE,6X,10HTEST LEVEL/1H )                                          STFT0047
  608 FORMAT(4X,2A6,4D24.16)                                            STFT0048
  609 FORMAT(27H0 POLYNOMIAL FITS COMPLETED)                            STFT0049
  610 FORMAT(6H0   * ,A6,32H POLYNOMIAL FAILED RESIDUAL TEST)           STFT0050
  611 FORMAT(9X,37HTRY NEW FIT WITH TMEAN MOVED. NFERR =,I3///)         STFT0051
  612 FORMAT(61H0   * ATTEMPTED TO FIT POLYNOMIAL BEYOND LIMITS OF DATA STFT0052
     1ARRAY)                                                            STFT0053
C                                                                       STFT0054
C     OUTPUT HEADING                                                    STFT0055
    1 CONTINUE                                                          STFT0056
      I = NFPOLY-1                                                      STFT0057
      IF (NSTTF.EQ.0) GO TO 2                                           STFT0058
      WRITE (6,601) NFPTS,I,NFSKIP,FITLEV                               STFT0059
C     INITIALIZE FIT COUNTERS                                           STFT0060
    2 CONTINUE                                                          STFT0061
      NB = NFPTS/2+1                                                    STFT0062
      TMEAN = (DATA(1,1)+DATA(1,NPTSTT))/2.                             STFT0063
    3 STP = TMEAN                                                       STFT0064
      IF (TFIT.EQ.0.D0)  GO TO 4                                        STFT0065
      STP = TFIT                                                        STFT0066
      NB = 1                                                            STFT0067
    4 CONTINUE                                                          STFT0068
      DO 6 JM=1,NPTSTT                                                  STFT0069
      IF (STP.LE.DATA(1,JM))  GO TO 8                                   STFT0070
    6 CONTINUE                                                          STFT0071
    8 CONTINUE                                                          STFT0072
      NFTRY = 0                                                         STFT0073
      JL = JM                                                           STFT0074
```

```
      NFRR = NFERR                                                      STFT0075
C                                                                       STFT0076
C     NEW TRIAL                                                         STFT0077
   10 NFTRY = NFTRY+1                                                   STFT0078
      IF (NSTTF.GT.4) WRITE (6,602) TMEAN,NFTRY,MFTRY                   STFT0079
      MEAS = 0                                                          STFT0080
C                                                                       STFT0081
C     MEASUREMENT LOOP                                                  STFT0082
   20 MEAS = MEAS+1                                                     STFT0083
      IF (.NOT.LMEAS(MEAS)) GO TO 70                                    STFT0084
      ASSIGN 21 TO N1                                                   STFT0085
      II = 1                                                            STFT0086
      IP = JM-1                                                         STFT0087
      K  = NB                                                           STFT0088
      JJ = NFSKIP                                                       STFT0089
   21 IF (K .GT.NFPTS)        GO TO 22                                  STFT0090
      IF (IP.GE.NPTSTT)       GO TO 90                                  STFT0091
      GO TO 24                                                          STFT0092
   22 ASSIGN 23 TO N1                                                   STFT0093
      II =-1                                                            STFT0094
      IP = JM                                                           STFT0095
      K  = NB-1                                                         STFT0096
      JJ = 0                                                            STFT0097
   23 IF (K .LT.1)            GO TO 30                                  STFT0098
      IF (IP.LE.1)            GO TO 90                                  STFT0099
   24 IP = IP+II                                                        STFT0100
      STP = DATA(MEAS+1,IP)                                             STFT0101
      IF (STP.LT.0.)          GO TO 29                                  STFT0102
      JJ = JJ+1                                                         STFT0103
      IF (JJ.LE.NFSKIP)       GO TO 29                                  STFT0104
C     LOAD TIME                                                         STFT0105
   25 JJ = 0                                                            STFT0106
      NP(K)   = IP                                                      STFT0107
      FITY(K) = STP                                                     STFT0108
      TM(K,1) = 1.D0                                                    STFT0109
      FITT(K) = DATA(1,IP)                                              STFT0110
      TP = FITT(K)-TMEAN                                                STFT0111
      DO 26 J=2,NFPOLY                                                  STFT0112
   26 TM(K,J) = TM(K,J-1)*TP                                            STFT0113
      K = K+II                                                          STFT0114
   29 GO TO N1, (21,23)                                                 STFT0115
C                                                                       STFT0116
C     TM IS LOADED                                                      STFT0117
   30 CONTINUE                                                          STFT0118
      DO 31 I=1,110                                                     STFT0119
   31 TMT(I,1) = 0.D0                                                   STFT0120
      DO 33 K=1,NFPTS                                                   STFT0121
      STP = FITY(K)                                                     STFT0122
      DO 32 I=1,NFPOLY                                                  STFT0123
      TPM(I) = TPM(I)+TM(K,I)*STP                                       STFT0124
      DO 32 J=1,NFPOLY                                                  STFT0125
   32 TMT(I,J) = TMT(I,J)+TM(K,I)*TM(K,J)                               STFT0126
   33 CONTINUE                                                          STFT0127
C                                                                       STFT0128
C     SOLVE FOR COEFFICIENTS                                            STFT0129
   40 CONTINUE                                                          STFT0130
      CALL DINVRT (TMT,NFPOLY,10)                                       STFT0131
      CALL DMPLY (TMT,TPM,POLY,NFPOLY,NFPOLY,1,10,10,10,0)              STFT0132
      COEF(1,MEAS) = POLY(1)                                            STFT0133
      COEF(2,MEAS) = POLY(2)                                            STFT0134
C                                                                       STFT0135
C     COMPUTE RESIDUALS AND CHECK FIT                                   STFT0136
   50 CONTINUE                                                          STFT0137
      CALL DMPLY (TM,POLY,FITYH,NFPTS,NFPOLY,1,30,10,30,0)              STFT0138
      TP  = 0.D0                                                        STFT0139
      STP = NFPTS                                                       STFT0140
      DO 52 I=1,NFPTS                                                   STFT0141
      FITYR(I) = FITY(I)-FITYH(I)                                       STFT0142
      TP  = TP+FITYR(I)**2                                              STFT0143
   52 CONTINUE                                                          STFT0144
      TP  = TP/STP                                                      STFT0145
      TPM = FITLEV*Q(MEAS)                                              STFT0146
      RMS(MEAS) = TP                                                    STFT0147
      TST(MEAS) = TPM                                                   STFT0148
C                                                                       STFT0149
```

```
C     OUTPUT FIT DATA                                                   STFT0150
   60 IF (NSTTF.LT.4) GO TO 66                                          STFT0151
      WRITE (6,603) LBM(MEAS),LBM(MEAS+4),(LBPOLY(I),POLY(I),I=1,NFPOLY)STFT0152
   62 IF (NSTTF.LT.5) GO TO 64                                          STFT0153
      WRITE (6,604) (NP(I),FITT(I),FITY(I),FITYH(I),FITYR(I),I=1,NFPTS) STFT0154
   64 WRITE (6,605) TP,TPM(1)                                           STFT0155
   66 CONTINUE                                                          STFT0156
      IF (TP.GT.TPM) GO TO 80                                           STFT0157
C                                                                       STFT0158
C     END MEASUREMENT LOOP                                              STFT0159
   70 IF (MEAS.LT.4) GO TO 20                                           STFT0160
C     FIT COMPLETED AND ACCEPTED                                        STFT0161
      IERR = 0                                                          STFT0162
      IF (NSTTF.LT.2) GO TO 999                                         STFT0163
      WRITE (6,606)                                                     STFT0164
      WRITE (6,602)    TMEAN,NFTRY,MFTRY                                STFT0165
      WRITE (6,607)                                                     STFT0166
      DO 72 I=1,4                                                       STFT0167
      IF (.NOT.LMEAS(I)) GO TO 72                                       STFT0168
      WRITE (6,608) LBM(I),LBM(I+4),COEF(1,I),COEF(2,I),RMS(I),TST(I)   STFT0169
   72 CONTINUE                                                          STFT0170
      IF (NSTTF.GT.0) WRITE (6,609)                                     STFT0171
      GO TO 999                                                         STFT0172
C                                                                       STFT0173
C     NO FIT OBTAINED                                                   STFT0174
   80 IF (NSTTF.GE.3) WRITE (6,610) LBM(MEAS)                           STFT0175
      IF (NFTRY.GE.MFTRY) GO TO 95                                      STFT0176
      IF (NSTTF.GE.3) WRITE (6,611) NFERR                               STFT0177
      I  = JL                                                           STFT0178
      JL = JM                                                           STFT0179
      JM = I+NERR                                                       STFT0180
      TMEAN = DATA(1,JM)                                                STFT0181
      NERR = -NERR                                                      STFT0182
      GO TO 10                                                          STFT0183
C                                                                       STFT0184
C     EXIT                                                              STFT0185
   90 IF (NSTTF.GE.3) WRITE (6,612)                                     STFT0186
   95 IERR = 15                                                         STFT0187
C                                                                       STFT0188
  999 RETURN                                                            STFT0189
      END
```

Subroutine: STTIME

Purpose: Computes residuals and accumulates the information matrix (P^{-1}) and projected residuals $H^T Q^{-1}(y - \hat{y})$ at a time point for use in maximum likelihood estimate. Optionally computes and outputs residuals.

Common storages used: // 144 cells,/DATCØM/,/DCPCØM/,/EDTCØM/,/ESTCØM/, /MLECØM/

Subroutines required: CBDATP,DMPLY,DMVTRN,DSDATP,GRDATP,SBDATP, STATE,STEPDP

Method:

STTIME accepts the universal time corresponding to the time tag for a data point, and the conic section corresponding to the estimate of state at the epoch, and either output residuals or accumulates the information matrix and projected residuals.

The down-leg transmission delay is approximated from

$$\Delta t = \frac{1}{c} \left| R_v(t_r) - R_s(t_{ur}) \right|$$

where

R_v = vehicle position

R_s = observing station position

t_r = E.T. of signal reception

t_{ur} = U.T. of signal reception

c = speed of light

This delay is used for both up-leg and down-leg delays for the computation of vehicle time, t_v, and transmission time, t_t. The transformations T_{B2C} at the transmission and reception times, and the vehicle state at vehicle time, are computed for both ends of the doppler count interval by calls of subroutine STATE.

The conic transition matrix $\Phi(t_v, t_{v1})$, where t_{v1} is the vehicle E.T. at epoch, is used to compute the partial derivatives

$$\frac{\partial x(t_v)}{\partial x_m} = \varphi(t_v \; ; \; t_{v1}) \frac{\partial x(t_{v1})}{\partial x_m}$$

where $x(t)$ is the cartesian state and x_m are the measurement coordinates of t_{v1} (see subroutine MEAS2X). The information matrix, P^{-1}, and projected residuals, $H^T Q^{-1}(y - \hat{y})$ are accumulated using

$$P^{-1} = H^T Q^{-1} H$$

$$H = \frac{\partial y}{\partial x_m} = \frac{\partial x(t_v)}{\partial x_m}$$

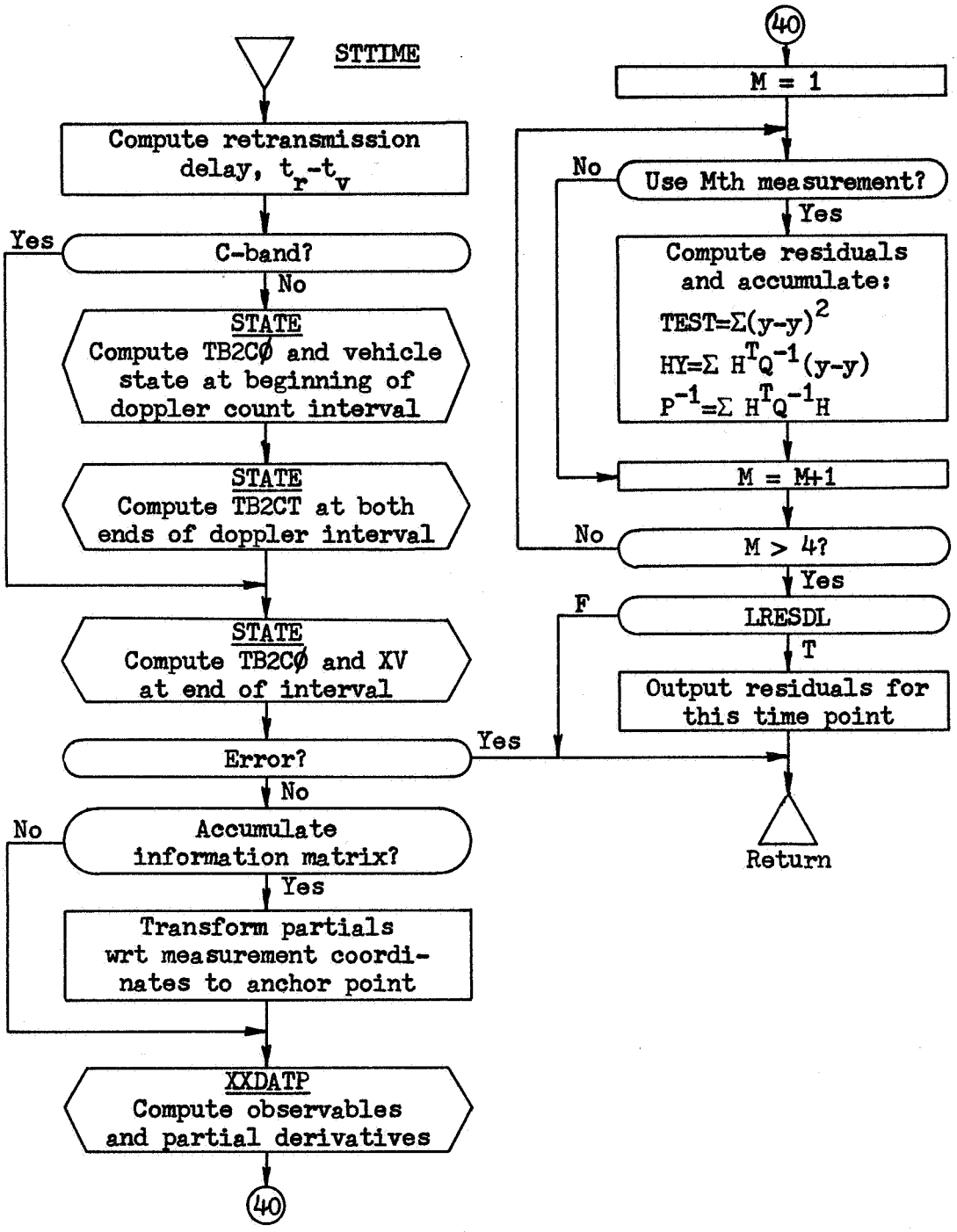
STTIME
Compute retransmission delay, $t_r - t_v$
C-band?
Yes
No
STATE
Compute TB2CØ and vehicle state at beginning of doppler count interval
STATE
Compute TB2CT at both ends of doppler interval
STATE
Compute TB2CØ and XV at end of interval
Error?
Yes
No
Accumulate information matrix?
No
Yes
Transform partials wrt measurement coordinates to anchor point
XXDATP
Compute observables and partial derivatives
40
40
M = 1
Use Mth measurement?
No
Yes
Compute residuals and accumulate:
$TEST = \Sigma(y-y)^2$
$HY = \Sigma H^T Q^{-1}(y-y)$
$P^{-1} = \Sigma H^T Q^{-1} H$
M = M+1
M > 4?
No
Yes
LRESDL
F
T
Output residuals for this time point
Return

```
$IBFTC MC13T5  XR3,M94,NODD,LIST
      SUBROUTINE STTIME                                                 STIM0001
C     COMPUTES AND OUTPUTS RESIDUALS                                    STIM0002
C     ACCUMULATES INFORMATION MATRIX                                    STIM0003
C                                                                       STIM0004
      DOUBLE PRECISION   DSQRT                                          STIM0005
C                                                                       STIM0006
      COMMON             /DCPCOM/CDCP(900)                              STIM0007
      EQUIVALENCE        (CDCP(111),IERR  ) ,(CDCP(684),NSTIR )         STIM0008
C                                                                       STIM0009
      COMMON             /EDTCOM/INDDAT(40),BUFDAT(85,6)                STIM0010
      EQUIVALENCE        (INDDAT(8),MTYPE )                             STIM0011
C                                                                       STIM0012
      COMMON             /ESTCOM/CEST(804)                              STIM0013
      DOUBLE PRECISION   DELDAN(2)                                      STIM0014
      EQUIVALENCE        (CEST( 97),DELDAN)                             STIM0015
C                                                                       STIM0016
      COMMON             /DATCOM/CDAT(299)                              STIM0017
      DOUBLE PRECISION   OBS(16,4) ,TB2CO(3,6) ,XV(12)                  STIM0018
     1                   ,SPDLT      ,TB2CI(3,6) ,IAU                   STIM0019
      EQUIVALENCE                (CDAT(137),SPDLT ) ,(CDAT(161),TB2CO )  STIM0020
     1                          ,(CDAT(139),STA   ) ,(CDAT(197),TB2CI )  STIM0021
     2     ,(CDAT(  5),OBS    ) ,(CDAT(159),IAU   ) ,(CDAT(269),XV    )  STIM0022
C                                                                       STIM0023
      COMMON             /MLECOM/CMLE(1070)                             STIM0024
      DOUBLE PRECISION   DATAT(4) ,ETIMR ,HY   (6) ,QI  (4) ,UTIMT      STIM0025
     1                   ,DELAY    ,ETIMT ,OBIAS(4) ,TEST(4) ,YMOD(4)   STIM0026
     2                   ,DRA      ,ETIMV ,PI (6,6) ,UTIMR   ,YR  (4)   STIM0027
      DIMENSION          DATA(5,100) ,NYR(4)                            STIM0028
      LOGICAL            LDATA   (4) ,LRESDL                            STIM0029
      EQUIVALENCE                (CMLE( 19),ETIMV ) ,(CMLE(223),PI    )  STIM0030
     1                          ,(CMLE(295),HY    ) ,(CMLE(135),PX12M )  STIM0031
     2     ,(CMLE(570),DATA  ) ,(CMLE(434),TIME  ) ,(CMLE( 55),QI    )  STIM0032
     3     ,(CMLE( 39),DATAT ) ,(CMLE(401),LDATA ) ,(CMLE(307),TEST  )  STIM0033
     4     ,(CMLE( 25),DELAY ) ,(CMLE(407),LRESDL) ,(CMLE( 15),UTIMR )  STIM0034
     5     ,(CMLE(367),DRA   ) ,(CMLE(431),NSTATE) ,(CMLE( 21),UTIMT )  STIM0035
     6     ,(CMLE( 17),ETIMR ) ,(CMLE(427),NYR   ) ,(CMLE(207),YMOD  )  STIM0036
     7     ,(CMLE( 23),ETIMT ) ,(CMLE( 31),OBIAS ) ,(CMLE(215),YR    )  STIM0037
C                                                                       STIM0038
      COMMON             PX2M(6,6) ,TP(36)                              STIM0039
      DOUBLE PRECISION   PX2M,TP                                        STIM0040
C                                                                       STIM0041
  601 FORMAT(8X,5E17.8)                                                 STIM0042
C                                                                       STIM0043
C     RETRANSMISSION DELAY                                              STIM0044
C                                                                       STIM0045
    1 CONTINUE                                                          STIM0046
      ETIMR = UTIMR+DELDAN(1)+DELDAN(2)*UTIMR                           STIM0047
      CALL STATE  (ETIMR,UTIMR,TP(31),TB2CO,1)                          STIM0048
      CALL DMVTRN (TB2CO,STA,TP,1,1)                                    STIM0049
      TP(4) = 0.D0                                                      STIM0050
      DO 2 I=1,3                                                        STIM0051
      TP(5) = TP(I+30)-TP(I)                                            STIM0052
    2 TP(4) = TP(4)+TP(5)*TP(5)                                         STIM0053
      DELAY = DSQRT(TP(4))/SPDLT                                        STIM0054
      ETIMV = ETIMR-DELAY                                               STIM0055
C                                                                       STIM0056
C     VEHICLE STATE AND EARTH ORIENTATION                               STIM0057
C                                                                       STIM0058
   10 IF (MTYPE.EQ.1)     GO TO 11                                      STIM0059
C     AT RECEPTION, BEGINNING OF COUNT                                  STIM0060
      CALL STATE  (ETIMV-TAU,UTIMR-TAU,XV(7),TB2CO(1,4),1)              STIM0061
C     AT TRANSMISSION                                                   STIM0062
      ETIMT = ETIMV-DELAY                                               STIM0063
      UTIMT = ETIMT-DELDAN(1)-DELDAN(2)*ETIMT                           STIM0064
      CALL STATE  (TP,UTIMT     ,TP,TB2CT      ,0)                      STIM0065
      CALL STATE  (TP,UTIMT-TAU,TP,TB2CT(1,4),0)                        STIM0066
C     AT RECEPTION, END OF COUNT                                        STIM0067
   11 CALL STATE  (ETIMV,UTIMR,XV,TB2CO,1)                              STIM0068
      IF (IERR.EQ.0)      GO TO 20                                      STIM0069
      IERR = IERR+15                                                    STIM0070
      GO TO 999                                                         STIM0071
C                                                                       STIM0072
C     UPDATE ANCHOR POINT PARTIALS                                      STIM0073
C                                                                       STIM0074
```

```
   20 IF (LRESDL)        GO TO 30                                    STIM0075
      CALL STEPDP (TP)                                               STIM0076
      CALL DMPLY  (TP,PX12M,PX2M,6,6,6,6,6,6,0)                      STIM0077
C                                                                    STIM0078
C     COMPUTE MEASUREMENT ESTIMATES AND PARTIALS                     STIM0079
C                                                                    STIM0080
   30 CONTINUE                                                       STIM0081
      GO TO (31,32,33,34) ,MTYPE                                     STIM0082
C     C-BAND                                                         STIM0083
   31 CONTINUE                                                       STIM0084
      CALL CBDATP (TP)                                               STIM0085
      GO TO 40                                                       STIM0086
C     STADAN/VHF                                                     STIM0087
   32 CONTINUE                                                       STIM0088
      CALL GRDATP (TP)                                               STIM0089
      GO TO 40                                                       STIM0090
C     USBS                                                           STIM0091
   33 CONTINUE                                                       STIM0092
      CALL SBDATP (TP)                                               STIM0093
      GO TO 40                                                       STIM0094
C     DSIF                                                           STIM0095
   34 CONTINUE                                                       STIM0096
      CALL DEHA   (UTIMR,DRA,TP(2),TP)                               STIM0097
      CALL DSDATP (TP(2),TP)                                         STIM0098
C                                                                    STIM0099
C     COMPUTE RESIDUALS AND ACCUMULATE INFORMATION MATRIX            STIM0100
C                                                                    STIM0101
   40 CONTINUE                                                       STIM0102
      DO 49 M=1,4                                                    STIM0103
      YR(M) =-0.12345678E20                                          STIM0104
      IF (.NOT.LDATA(M)) GO TO 49                                    STIM0105
      YR(M) = DATAT(M)-OBS(1,M)-OBIAS(M)                             STIM0106
      TP = YR(M)/YMOD(M)+0.5D0                                       STIM0107
      IF (TP.LT.0.D0) TP = TP-1.D0                                   STIM0108
      TP = AINT(TP)                                                  STIM0109
      YR(M) = YR(M)-TP*YMOD(M)                                       STIM0110
      TEST(M) = TEST(M)+YR(M)**2                                     STIM0111
      NYR(M) = NYR(M)+1                                              STIM0112
      IF (LRESDL)        GO TO 49                                    STIM0113
      DO 44 J=1,NSTATE                                               STIM0114
      TP(J+30) = 0.D0                                                STIM0115
      DO 42 I=1,6                                                    STIM0116
   42 TP(J+30) = TP(J+30)+OBS(I+1,M)*PX2M(I,J)                       STIM0117
   44 CONTINUE                                                       STIM0118
      DO 46 J=1,NSTATE                                               STIM0119
      TP = QI(M)*TP(J+30)                                            STIM0120
      HY(J) = HY(J)+TP*YR(M)                                         STIM0121
      DO 46 I=1,NSTATE                                               STIM0122
   46 PI(I,J) = PI(I,J)+TP*TP(I+30)                                  STIM0123
   49 CONTINUE                                                       STIM0124
C                                                                    STIM0125
C     OUTPUT RESIDUALS                                               STIM0126
C                                                                    STIM0127
   50 IF (.NOT.LRESDL.OR.NSTTR.EQ.0) GO TO 999                       STIM0128
      WRITE (6,601) DATA(1,ITIME),(YR(I),I=1,4)                      STIM0129
  999 RETURN                                                         STIM0130
      END
```

Subroutine: TCØNIC

Purpose: To compute time from periapsis corresponding to a given true anomaly on a specified conic section.

Calling Sequence: CALL TCØNIC (U,EC,A,SLR,TA2,T,FAC)

Input and Output

I/Ø	Symbolic Name or Location	Program Dimensions	Math Symbol	Data Dimensions or Units	Definition
I	U		GM	km^3/sec^2	Gravitational constant
I	EC		e		Eccentricity
I	A		a	km	Semi-major axis
I	SLR		p	km	Semi-latus rectum
I	TA2		θ	rad	True anomaly
Ø	T		t	sec	Time from periapsis
Ø	FAC		1/n	sec/rad	Reciprocal mean motion

Common storages required: None

Subroutines required: None

Method

Time from periapsis is computed by the following equations and procedures.

$$T = \frac{1}{n} = a\sqrt{a/GM}$$

$$R = \frac{1 - e}{1 + e}$$

$$F = \sqrt{|R|}$$

$$E = 2 \tan^{-1}(F \tan \frac{\theta}{2})$$

If the conic is elliptical, the time is calculated by

$$t = T \cdot (E - e \sin E)$$

If the conic is hyperbolic, the time is calculated by

$$t = T \cdot (e \tanh E - \ln \tan (\frac{E}{2} + \frac{\pi}{4}))$$

If the conic is very nearly parabolic, the time is calculated from the truncated series

$$T = \frac{2\sqrt{p^3/GM}}{(1 + e)^2}$$

$$G = R \tan^2 (\frac{\theta}{2})$$

$$t = T \cdot (\tan \frac{\theta}{2} + \frac{(1-2R)}{3}\tan^3 \frac{\theta}{2} - \frac{(2-3R)}{5}G^3 + \frac{(3-4R)}{7}G^5 - \frac{(4-5R)}{9}G^7)$$

```
$IBFTC MC13TC  XR3,M94,NOREF,NODD
      SUBROUTINE TCONIC(U,EC,A,SLR,TA2,T,FAC)                           TCON0010
      TANGF(X)=SIN (X)/COS (X)                                          TCON0020
      AB=ABS (A)                                                        TCON0030
      FAC=AB*SQRT (AB/U)                                                TCON0040
      ECA=(1.-EC)/(1.+EC)                                               TCON0050
      ABE=SQRT (ABS (ECA))                                              TCON0060
      THE=TANGF(.5*TA2)                                                 TCON0070
      IF(ABE-.00005)11,11,12                                            TCON0080
   12 CONTINUE                                                          TCON0090
      ECA=2.*ATAN (ABE*THE)                                             TCON0100
      IF(A)14,11,13                                                     TCON0110
   13 T=FAC*(ECA-EC*SIN (ECA))                                          TCON0120
      GO TO 16                                                          TCON0130
   14 ANG=ABE*THE                                                       TCON0140
      ANG=1.+2.*ANG/(1.-ANG)                                            TCON0150
      T=FAC*(EC*TANGF(ECA)-ALOG(ANG))                                   TCON0160
      GO TO 16                                                          TCON0170
   11 FAC=SQRT (SLR**3/U)*2./((1.+EC)**2)                               TCON0180
      EC1=ECA*THE**2                                                    TCON0190
      T=FAC*(THE+THE**3*((1.-2.*ECA)/3.-(2.-3.*ECA)*EC1/5.+(3.-4.*ECA)*ETCON0200
     1C1**2/7.-(4.-5.*ECA)*EC1**3/9.))                                  TCON0210
   16 CONTINUE                                                          TCON0220
      RETURN                                                            TCON0230
      END                                                               TCON0240
```

Subroutine: TDEP

Purpose: Executive driver to control the logic flow in the Tracking Data Editing Program.

Common storages used: /MIXCØM/,/ØUTCØM/,/SUMCØM/,/TSTCØM/

Subroutines required: CBTEST, DATINP, DATØUP, DSTEST, EGRESS, GRTEST, MIXIT, NUDATA, SBTEST, SCANIT

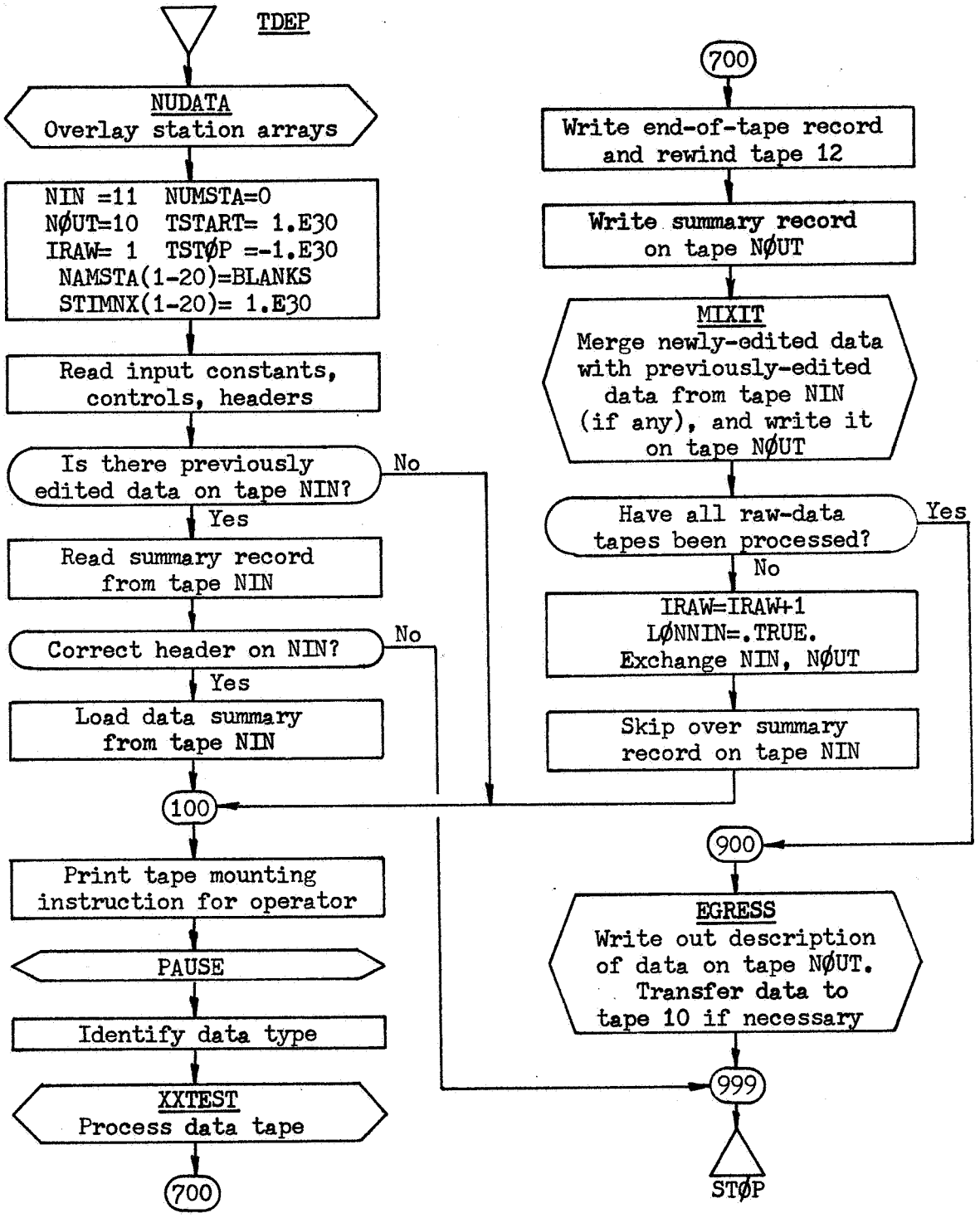
TDEP
NUDATA
Overlay station arrays
NIN =11 NUMSTA=0
NØUT=10 TSTART= 1.E30
IRAW= 1 TSTØP =-1.E30
NAMSTA(1-20)=BLANKS
STIMNX(1-20)= 1.E30
Read input constants, controls, headers
Is there previously edited data on tape NIN?
No
Yes
Read summary record from tape NIN
Correct header on NIN?
No
Yes
Load data summary from tape NIN
100
Print tape mounting instruction for operator
PAUSE
Identify data type
XXTEST
Process data tape
700
700
Write end-of-tape record and rewind tape 12
Write summary record on tape NØUT
MIXIT
Merge newly-edited data with previously-edited data from tape NIN (if any), and write it on tape NØUT
Have all raw-data tapes been processed?
Yes
No
IRAW=IRAW+1
LØNNIN=.TRUE.
Exchange NIN, NØUT
Skip over summary record on tape NIN
900
EGRESS
Write out description of data on tape NØUT. Transfer data to tape 10 if necessary
999
STØP

```
$IBFTC MC134Z  XR3,M94,NODD,LIST
C     TDEP - TRACKING DATA EDITING PROGRAM                                TDEP0001
C                                                                         TDEP0002
C     DEVELOPED BY  PHILCO-FORD CORPORATION                               TDEP0003
C                FOR GODDARD SPACE FLIGHT CENTER                          TDEP0004
C                CONTRACT NAS5-9939                                       TDEP0005
C                                                                         TDEP0006
C     REFERENCE TR-DA1508, PROGRAM DESCRIPTION AND THEORETICAL BASIS,     TDEP0007
C                          ORBIT DETERMINATION PROGRAM                    TDEP0008
C                TR-DA1509, SUBROUTINE DESCRIPTIONS AND LISTINGS,         TDEP0009
C                          ORBIT DETERMINATION PROGRAM                    TDEP0010
C                TR-DA1510, INPUT-OUTPUT SUMMARY,                         TDEP0011
C                          ORBIT DETERMINATION PROGRAM                    TDEP0012
C                                                                         TDEP0013
C     DECEMBER 1967                                                       TDEP0014
C                                                                         TDEP0015
      COMMON  /MIXCOM/IMIX(4)                                             TDEP0016
      LOGICAL LONNIN,LON12                                                TDEP0017
      EQUIVALENCE              (IMIX(1),LONNIN),    (IMIX(2),LON12)       TDEP0018
     1,  (IMIX(3),NIN),        (IMIX(4),NOUT)                             TDEP0019
C                                                                         TDEP0020
      COMMON  /TSTCOM/CTEST(400)                                          TDEP0021
      DOUBLE PRECISION  FINISH(10),    TLO(10),        THI(10)            TDEP0022
      DIMENSION   NYR(10),      NPTS(10),     NSTEP(10),    NDEG(10)      TDEP0023
     1,           CSD(4,10),    IFOMIT(4,10), ISTAOK(20,10),KMAX(10)      TDEP0024
      EQUIVALENCE              (CTEST(1),NYR),      (CTEST(11),NPTS)      TDEP0025
     1,  (CTEST(21),NSTEP),    (CTEST(31),NDEG),    (CTEST(41),CSD)       TDEP0026
     2,  (CTEST(81),IRAW),     (CTEST(87),FINISH)                         TDEP0027
     3,  (CTEST(107),IFOMIT),  (CTEST(147),KMAX),   (CTEST(157),ISTAOK)   TDEP0028
     4,  (CTEST(357),TLO),     (CTEST(377),THI)                           TDEP0029
C                                                                         TDEP0030
      COMMON  /SUMCOM/SUMARY(56)                                          TDEP0031
      DOUBLE PRECISION TSTART,TSTOP                                       TDEP0032
      DIMENSION   HEADER(11),   STIMNX(20)                                TDEP0033
      REAL NAMSTA(20)                                                     TDEP0034
      EQUIVALENCE              (SUMARY(1),HEADER),  (SUMARY(12),NUMSTA)  TDEP0035
     1,  (SUMARY(13),NAMSTA), (SUMARY(33),TSTART), (SUMARY(35),TSTOP)    TDEP0036
     2,  (SUMARY(37),STIMNX)                                              TDEP0037
C                                                                         TDEP0038
      COMMON  /OUTCOM/COUT(40)                                            TDEP0039
      EQUIVALENCE  (COUT(2),NEOT)                                         TDEP0040
C                                                                         TDEP0041
      DIMENSION   SUMNIN(56)                                              TDEP0042
      DOUBLE PRECISION TFNIN,TLNIN                                        TDEP0043
      DIMENSION   HEDNIN(11),   STININ(20)                                TDEP0044
      REAL NAMNIN(20)                                                     TDEP0045
      EQUIVALENCE              (SUMNIN(1),HEDNIN),  (SUMNIN(12),NUMNIN) TDEP0046
     1,  (SUMNIN(13),NAMNIN), (SUMNIN(33),TFNIN),  (SUMNIN(35),TLNIN)    TDEP0047
     2,  (SUMNIN(37),STININ)                                              TDEP0048
C                                                                         TDEP0049
      DIMENSION   MESSGE(11,10),MTYPE(10),    HDRNIN(11),   DI(9)         TDEP0050
      LOGICAL XTROUT                                                      TDEP0051
C                                                                         TDEP0052
  501 FORMAT(I6,11A6)                                                     TDEP0053
  502 FORMAT(6X,11A6/5I3)                                                 TDEP0054
  503 FORMAT(4F10.0)                                                      TDEP0055
  504 FORMAT(4I1)                                                         TDEP0056
  505 FORMAT(I3,20I2)                                                     TDEP0057
  506 FORMAT(9F8.2)                                                       TDEP0058
  601 FORMAT(1H1,45X,28H*** TRACKING DATA EDITOR ***/44H0NUMBER OF RAW DTDEP0059
     1ATA TAPES TO BE PROCESSED = ,I2/20H0OUTPUT TAPE HEADER,11A6/48H0METDEP0060
     2RGE (INDICATOR FOR PREVIOUSLY EDITED DATA) = ,I2/36H0PREVIOUSLY EDTDEP0061
     3ITED DATA TAPE HEADER,11A6//52X,16H****************)              TDEP0062
  602 FORMAT(////21H RAW DATA TAPE NUMBER,I3/54H0***  MOUNT THE FOLLOWINTDEP0063
     1G TAPE ON UNIT 9 AND HIT START/1X,11A6/27H0*** CONTROLS FOR THIS TTDEP0064
     2APE/20H0MEASUREMENT TYPE = ,I2,2X,45H(1 = C-BAND,  2 = GRRD,  3 = TDEP0065
     3USBS,  4 = DSIF)/15H0YEAR NUMBER = ,I3/38H0NUMBER OF POINTS IN POLTDEP0066
     4YNOMIAL FIT = ,I3/29H0POLYNOMIAL WALK STEP SIZE = ,I3/24H0DEGREE OTDEP0067
     5F POLYNOMIAL = ,I2/46H0NUMBER OF STANDARD DEVIATIONS ALLOWED IN DATDEP0068
     6TA/2X,35HANGLE 1   ANGLE 2   RANGE   DOPPLER/F8.2,F10.2,2F9.2/67H0TDEP0069
     7PROCESSING OF THIS TAPE WILL STOP IF THE FOLLOWING DATE IS REACHEDTDEP0070
     8)                                                                   TDEP0071
  603 FORMAT(36H0***  EDIT ASSIST DATA FOR THIS TAPE//6X,26H0BSERVABLE STDEP0072
     1UPRESSION KEYS/36H ANGLE 1   ANGLE 2   RANGE   DOPPLER/I5,I10,I9,ITDEP0073
     29/27H0ACCEPTABLE STATION CODES (,I2,1H)/I3,19(1H,,I3))              TDEP0074
```

```
  604 FORMAT(39H0DATA LINES WITH TIME TAGS EARLIER THAN)                TDEP0075
  605 FORMAT(14H OR LATER THAN)                                         TDEP0076
  606 FORMAT(17H WILL BE REJECTED)                                      TDEP0077
  908 FORMAT(60H0***  PROGRAM CANNOT PROCESS MORE THAN 10 TAPES SEQUENTITDEP0078
     1ALLY/6X,24HPROGRAM RUN DISCONTINUED)                              TDEP0079
 1001 FORMAT(43H0*** EDITED DATA TAPE HEADER DOES NOT AGREE/1X,11A6/    TDEP0080
     16X,22HPROGRAM RUN TERMINATED)                                     TDEP0081
 1002 FORMAT(54H0***  MOUNT THE FOLLOWING TAPE ON UNIT 9 AND HIT START/ TDEP0082
     11X,11A6)                                                          TDEP0083
      DATA BLANKS/6H      /                                             TDEP0084
C     OVERLAY STATION DATA                                              TDEP0085
      CALL NUDATA                                                       TDEP0086
C     INITIALIZE CONTROLS                                               TDEP0087
      NIN=11                                                            TDEP0088
      NOUT=10                                                           TDEP0089
      IRAW=1                                                            TDEP0090
C     INITIALIZE SUMMARY DATA                                           TDEP0091
      TSTART=1.E30                                                      TDEP0092
      TSTOP=-1.E30                                                      TDEP0093
      DO 1 I=1,20                                                       TDEP0094
      STIMNX(I)=1.E30                                                   TDEP0095
    1 NAMSTA(I)=BLANKS                                                  TDEP0096
      NUMSTA=0                                                          TDEP0097
C     READ INPUT CONSTANTS, CONTROLS, HEADERS                           TDEP0098
      READ(5,501) IMAX,HEADER                                           TDEP0099
      XTROUT=IMAX.LT.0                                                  TDEP0100
      IMAX=IABS(IMAX)                                                   TDEP0101
      READ(5,501) MERGE,HDRNIN                                          TDEP0102
      IF(IMAX.GT.10) GO TO 998                                          TDEP0103
      DO 5 I=1,IMAX                                                     TDEP0104
      READ(5,502) (MESSGE(J,I),J=1,11),MTYPE(I),NYR(I),NPTS(I),NSTEP(I) TDEP0105
     1,NDEG(I)                                                          TDEP0106
      NPTS(I)=MIN0(NPTS(I),20)                                          TDEP0107
      NSTEP(I)=MAX0(NSTEP(I),1)                                         TDEP0108
      NDEG(I)=MIN0(MAX0(NDEG(I),1),5)                                   TDEP0109
      READ(5,503) (CSD(J,I),J=1,4)                                      TDEP0110
      DO 2 J=1,4                                                        TDEP0111
    2 IF(CSD(J,I).EQ.0.) CSD(J,I)=10.                                   TDEP0112
      READ(5,504) (IFOMIT(J,I),J=1,4)                                   TDEP0113
      READ(5,505) KK,(ISTAOK(J,I),J=1,KK)                               TDEP0114
      KMAX(I)=KK                                                        TDEP0115
      READ(5,506) DI                                                    TDEP0116
      CALL DATINP(DI,TLO(I))                                            TDEP0117
      CALL DATINP(DI(4),THI(I))                                         TDEP0118
      IF(DI(7).GT.0.) GO TO 5                                           TDEP0119
      DI(7)=10001.                                                      TDEP0120
    5 CALL DATINP(DI(7),FINISH(I))                                      TDEP0121
      WRITE(6,601) IMAX,HEADER,MERGE,HDRNIN                             TDEP0122
      LONNIN=MERGE.NE.0                                                 TDEP0123
      IF(.NOT.LONNIN) GO TO 100                                         TDEP0124
C     READ SUMMARY FROM PREVIOUSLY EDITED DATA                          TDEP0125
      READ(NIN) SUMNIN                                                  TDEP0126
C     TEST FOR PROPER HEADER                                            TDEP0127
      DO 10 I=1,11                                                      TDEP0128
      IF(HEDNIN(I).EQ.HDRNIN(I)) GO TO 10                               TDEP0129
      WRITE(6,1001) HEDNIN                                              TDEP0130
      GO TO 999                                                         TDEP0131
   10 CONTINUE                                                          TDEP0132
C     STORE SUMMARY DATA FOR OUTPUT                                     TDEP0133
      NUMSTA=NUMNIN                                                     TDEP0134
      DO 20 I=1,NUMSTA                                                  TDEP0135
      NAMSTA(I)=NAMNIN(I)                                               TDEP0136
   20 STIMNX(I)=STININ(I)                                               TDEP0137
      TSTART=TFNIN                                                      TDEP0138
      TSTOP=TLNIN                                                       TDEP0139
  100 CONTINUE                                                          TDEP0140
C     PRINT MOUNT INSTRUCTION TO OPERATOR                               TDEP0141
      PRINT 1002, (MESSGE(I,IRAW),I=1,11)                               TDEP0142
      WRITE(6,602) IRAW,(MESSGE(I,IRAW),I=1,11),MTYPE(IRAW),NYR(IRAW)   TDEP0143
     1,NPTS(IRAW),NSTEP(IRAW),NDEG(IRAW),(CSD(I,IRAW),I=1,4)            TDEP0144
      CALL DATOUP(FINISH(IRAW),DI,0)                                    TDEP0145
      KK=KMAX(IRAW)                                                     TDEP0146
      WRITE(6,603) (IFOMIT(I,IRAW),I=1,4),KMAX(IRAW),(ISTAOK(I,IRAW),I=1TDEP0147
     1,KK)                                                              TDEP0148
      WRITE(6,604)                                                      TDEP0149
```

```
      CALL DATOUP(TLO(IRAW),DI,0)                                       TDEP0150
      WRITE(6,605)                                                      TDEP0151
      CALL DATOUP(THI(IRAW),DI,0)                                       TDEP0152
      WRITE(6,606)                                                      TDEP0153
C                                                                       TDEP0154
C     FOR SEQUENTIAL PROCESSING OF MORE THAN ONE TAPE,                  TDEP0155
C     REMOVE C FROM COLUMN 1 OF NEXT CARD                               TDEP0156
C     PAUSE                                                             TDEP0157
C     ARE YOU SURE YOUR SYSTEM ALLOWS A PAUSE                           TDEP0158
C     ON SOME SYSTEMS A PAUSE CAUSES A TRANSFER TO THE EXIT ROUTINE     TDEP0159
C                                                                       TDEP0160
  200 CONTINUE                                                          TDEP0161
      KKK=MTYPE(IRAW)                                                   TDEP0162
      GO TO (300,400,500,600),KKK                                       TDEP0163
C     PROCESS A TAPE OF C-BAND DATA                                     TDEP0164
  300 CALL CBTEST(IERR)                                                 TDEP0165
      GO TO 700                                                         TDEP0166
C     PROCESS A TAPE OF GODDARD RANGE-RANGE RATE DATA                   TDEP0167
  400 CALL GRTEST(IERR)                                                 TDEP0168
      GO TO 700                                                         TDEP0169
C     PROCESS A TAPE OF USBS DATA                                       TDEP0170
  500 CALL SBTEST(IERR)                                                 TDEP0171
      GO TO 700                                                         TDEP0172
C     PROCESS A TAPE OF DSIF (JPL) DATA                                 TDEP0173
  600 CALL DSTEST(IERR)                                                 TDEP0174
  700 CONTINUE                                                          TDEP0175
C     REWIND RAW DATA TAPE                                              TDEP0176
      REWIND 9                                                          TDEP0177
C     PUT END OF TAPE RECORD ON SCRATCH TAPE (UNIT12)                   TDEP0178
      NEOT=1                                                            TDEP0179
      WRITE(12) COUT                                                    TDEP0180
      REWIND 42                                                         TDEP0181
      LON12=.TRUE.                                                      TDEP0182
C     WRITE SUMMARY RECORD ON NOUT                                      TDEP0183
      WRITE(NOUT) SUMARY                                                TDEP0184
C     MERGE DATA ON TAPE 12 WITH DATA ON TAPE NIN                       TDEP0185
C     PUT MERGED DATA ON TAPE NOUT                                      TDEP0186
      CALL MIXIT                                                        TDEP0187
      IF(IERR.EQ.2) GO TO 900                                           TDEP0188
C     THIS WAY TO THE GRAND EGRESS                                      TDEP0189
      IF(IRAW.GE.IMAX) GO TO 900                                        TDEP0190
C     PREPARE FOR NEXT RAW DATA TAPE                                    TDEP0191
      LONNIN=.TRUE.                                                     TDEP0192
      NNN=NIN                                                           TDEP0193
      NIN=NOUT                                                          TDEP0194
      NOUT=NNN                                                          TDEP0195
      IRAW=IRAW+1                                                       TDEP0196
C     SKIP OVER SUMMARY RECORD ON NIN                                   TDEP0197
C     YOU STILL HAVE IT IN SUMCOM, HAVING JUST WRITTEN IT               TDEP0198
      READ(NIN) DUMMY                                                   TDEP0199
      GO TO 100                                                         TDEP0200
  900 CONTINUE                                                          TDEP0201
C     WRITE SHORT DESCRIPTION OF FINAL OUTPUT                           TDEP0202
C     INSURE FINAL OUTPUT TO BE ON TAPE 10                              TDEP0203
      CALL EGRESS                                                       TDEP0204
C     WRITE OUT ALL DATA IF DESIRED                                     TDEP0205
C     YOU CAN USE SUBROUTINE SCANIT AS A READING PROGRAM                TDEP0206
C     FOR THESE EDITED DATA TAPES.                                      TDEP0207
C     JUST REMOVE SUBROUTINE AND RETURN CARDS                           TDEP0208
C     BE SURE TO PROVIDE SUBROUTINE DATOUP                              TDEP0209
      IF(XTROUT) CALL SCANIT                                            TDEP0210
      GO TO 999                                                         TDEP0211
  998 WRITE(6,908)                                                      TDEP0212
  999 STOP                                                              TDEP0213
      END
```

Subroutine: TDS

Purpose: Executive driver to direct the flow of the tracking data simulator program.

Common storages used: /INPCØM/

Subroutines required: MESERP

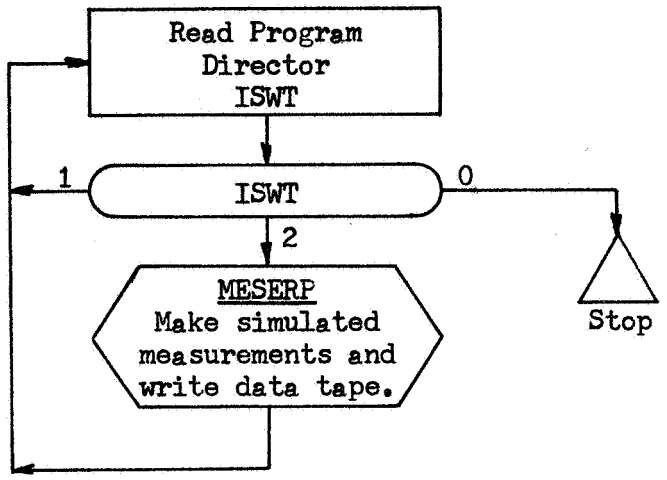
Read Program
Director
ISWT
ISWT
1
0
2
MESERP
Make simulated
measurements and
write data tape.
Stop

```
$IBFTC MC13AA  XR3,M94,NODD,LIST
C     TDS - TRACKING DATA SIMULATOR                                     TDS 0001
C                                                                       TDS 0002
C     DEVELOPED BY  PHILCO-FORD CORPORATION                             TDS 0003
C                FOR GODDARD SPACE FLIGHT CENTER                        TDS 0004
C                CONTRACT NAS5-9939                                     TDS 0005
C                                                                       TDS 0006
C     REFERENCE TR-DA1508, PROGRAM DESCRIPTION AND THEORETICAL BASIS,   TDS 0007
C                          ORBIT DETERMINATION PROGRAM                  TDS 0008
C                TR-DA1509, SUBROUTINE DESCRIPTIONS AND LISTINGS,       TDS 0009
C                          ORBIT DETERMINATION PROGRAM                  TDS 0010
C                TR-DA1510, INPUT-OUTPUT SUMMARY,                       TDS 0011
C                          ORBIT DETERMINATION PROGRAM                  TDS 0012
C                                                                       TDS 0013
C     DECEMBER 1967                                                     TDS 0014
C                                                                       TDS 0015
      COMMON  /INPCOM/C(700)                                            TDS 0016
   10 READ(5,700) ISWT                                                  TDS 0017
  700 FORMAT(I5)                                                        TDS 0018
      IF(ISWT.EQ.0) GO TO 810                                           TDS 0019
      GO TO (100,200),ISWT                                              TDS 0020
  100 CONTINUE                                                          TDS 0021
C     THIS SPACE RESERVED FOR COMPUTING AND WRITING TRAJECTORY ON       TDS 0022
C     TAPE UNIT 10                                                      TDS 0023
      GO TO 10                                                          TDS 0024
  200 CONTINUE                                                          TDS 0025
C     COMPUTE AND WRITE MEASUREMENTS ON TAPE UNIT 12                    TDS 0026
      CALL MESERP                                                       TDS 0027
      GO TO 10                                                          TDS 0028
  810 CONTINUE                                                          TDS 0029
      REWIND 8                                                          TDS 0030
      REWIND 10                                                         TDS 0031
      REWIND 12                                                         TDS 0032
      STOP                                                              TDS 0033
      END
```

Subroutine: TFRAC

Purpose: Supplies integral and fractional parts of a sum. Used principally to update the internal date format.

Calling Sequence: CALL TFRAC (TWI,TFI,TWØ,TFØ)

Input and Output

I/Ø	Symbolic Name or Location	Program Dimensions	Math Symbol	Data Dimensions or Units	Definition
I	TWI			days	Input whole days since 1950
I	TFI			days	Input fractional days (may be $\geq$ 1.)
Ø	TWØ			days	Integer part of TWI+TFI
Ø	TFØ			days	Fractional part of TWI+TFI

Common storages used: None

Subroutines required: None

```
$IBFTC MC13U1  XR3,M94,NODD,LIST
      SUBROUTINE TFRAC (TWI,TFI,TWO,TFO)                                TFRC0001
      TSV = TWI                                                         TFRC0002
    1 TWO = AINT(TSV+TFI)                                               TFRC0003
      TFO = (TSV-TWO)+TFI                                               TFRC0004
      RETURN                                                            TFRC0005
      END                                                               TFRC0006
```

Subroutine: TIMED

Purpose: Converts time interval from time format to seconds.

Calling Sequence: CALL TIMED (TM,S)

Input and Output

I/Ø	Symbolic Name or Location	Program Dimensions	Math Symbol	Data Dimensions or Units	Definition
I	TM				Input interval in time format (See TIMES)
Ø	S			seconds	Interval TM in seconds

Restrictions: If TM < 0, S is set equal to |TM| and no format conversion takes place. If conversion occurs, S is rounded to the nearest second.

Common storages used: None

Subroutines required: None

```
      SUBROUTINE TIMED (D,S)                                            TIMD0001
    1 T1 = D                                                            TIMD0002
      IF (T1) 2,2,3                                                     TIMD0003
    2 S = -T1                                                           TIMD0004
      RETURN                                                            TIMD0005
    3 T2 = AINT(T1)                                                     TIMD0006
      T1 = 100.*(T1-T2)                                                 TIMD0007
      IF (T1.LT.60.) GO TO 4                                            TIMD0008
      T2 = T2+1.                                                        TIMD0009
      T1 = 0.                                                           TIMD0010
    4 T3 = AINT(T1)                                                     TIMD0011
      T1 = 100.*(T1-T3)                                                 TIMD0012
      IF (T1.LT.60.) GO TO 5                                            TIMD0013
      T3 = T3+1.                                                        TIMD0014
      T1 = 0.                                                           TIMD0015
    5 T2 = T2-76.*AINT(T2/100.)                                         TIMD0016
      S = (T2*60.+T3)*60.+T1                                            TIMD0017
      RETURN                                                            TIMD0018
      END
```

Subroutine: TIMES

Purpose: Converts time interval from seconds to time format, and prepares a six-word BCD array for simplified output of interval in days, hours, minutes, and seconds.

Calling Sequence: CALL TIMES (S,TM,A)

Input and Output

I/Ø	Symbolic Name or Location	Program Dimensions	Math Symbol	Data Dimensions or Units	Definition
I	S			seconds	Input time interval
Ø	TM				Interval S in time format: (Days)x100 + (Hours) + (Min)/100 + (Sec)/10000
Ø	A	(6)			BCD image of TM in the form bxxxxbDAYbxxbHRSbxxbMINbxx.xxxbSECbb where b = blank x = numerical digit.

Common storages used: 8 cells

Subroutines required: BIBCD

```
$IBFTC MC13U4  XR3,M94,NODD,LIST
      SUBROUTINE TIMES (S,D,I)                                          TIMS0001
      COMMON     C(2),N(6)                                              TIMS0002
      DIMENSION  I(6),J(12),K(5)                                        TIMS0003
      INTEGER    BIBCD                                                  TIMS0004
      DATA  K   /60,60,24,0010000000000,6H                              TIMS0005
     1    /,J(6)/42H SEC  DAY 00 HRS 00 MIN 00I000  .0000 0000/         TIMS0006
C                                                                       TIMS0007
    1 C(1) = S                                                          TIMS0008
      N(1) = C(1)                                                       TIMS0009
      C(2) = C(1)-FLOAT(N(1))                                           TIMS0010
      DO 2 L=1,3                                                        TIMS0011
      N(L+1) = N(L)/K(L)                                                TIMS0012
    2 N(L) = N(L)-K(L)*N(L+1)                                           TIMS0013
      N(5) = C(2)*1000.                                                 TIMS0014
      N(6) = N(4)                                                       TIMS0015
      DO 3 L=1,3                                                        TIMS0016
      M = 4-L                                                           TIMS0017
    3 N(6) = 100*N(6)+N(M)                                              TIMS0018
      D = (C(2)+FLOAT(N(6)))/10000.                                     TIMS0019
C                                                                       TIMS0020
      N(6) = N(5)+10000*N(1)+2000                                       TIMS0021
      J(5) = BIBCD(N(6))                                                TIMS0022
      J(5) = J(5)+ISIGN(J(10),J(5))                                     TIMS0023
      IF (J(5).LE.J(11)) J(5) = J(5)+J(12)                              TIMS0024
      N(6) = N(2)/10                                                    TIMS0025
      J(4) = J(9)+K(4)*(N(2)-10*N(6))                                   TIMS0026
      IF (N(6).EQ.0) N(6) = 48                                          TIMS0027
      J(3) = J(8)-N(6)                                                  TIMS0028
      J(2) = N(3)/10                                                    TIMS0029
      N(3) = N(3)-10*J(2)                                               TIMS0030
      IF(J(2).EQ.0) J(2) = 48                                           TIMS0031
      J(2) = 64*J(2)+N(3)+J(7)                                          TIMS0032
      N(6) = 10*N(4)                                                    TIMS0033
      J(1) = BIBCD(N(6))-48                                             TIMS0034
      IF (J(1).EQ.K(5)) J(1) = J(1)+3072                                TIMS0035
      DO 4 L=1,6                                                        TIMS0036
    4 I(L) = J(L)                                                       TIMS0037
      RETURN                                                            TIMS0038
      END
```

Subroutine: TRAJD

Purpose: Controls the integration of the equations of motion for the DCP residual output link.

Calling Sequence: CALL TRAJD

Common storages used: //24 cells, /DCPCØM/,/DFMCØM/,/DQ3CØM/,/EDTCØM/, /ESRCØM/,/SB3CØM/,/TRJCØM/

Subroutines required: ACCTR3, DDØT, DEQ3, DNØRM, DPFMRS, ØUTTR3, STEPDI, STEPDT

Description

TRAJD loads the necessary constants and controls for the integration of the equations of motion and the accumulation of interpolation tables for the DCP residual output link. It initializes the integration tables, shifts central bodies, and rectifies the Encke integration as required. The operation of TRAJD parallels that of TRAJDP (q.v.), but omits those operations concerned with the variational equations.

```
$IBFTC MC133G  XR3,M94,NODD,LIST
      SUBROUTINE TRAJD                                                  TRAJ0001
C     INTEGRATION CONTROL ROUTINE FOR DCP RESIDUAL LINK                 TRAJ0002
C                                                                       TRAJ0003
      EXTERNAL            ACCTR3,OUTTR3                                 TRAJ0004
      DOUBLE PRECISION    DNORM,DSQRT                                   TRAJ0005
C                                                                       TRAJ0006
      COMMON             /DCPCOM/CDCP(900)                              TRAJ0007
      DIMENSION           CBODY(8,11) ,IFEMP  (8) ,NCB  (3,2)           TRAJ0008
     1                   ,ETAPE   (4) ,IFPLNT(11) ,STIMNX(20)           TRAJ0009
      DOUBLE PRECISION    CBRAN2 ,SPDLT ,STIMR(2)                       TRAJ0010
      EQUIVALENCE                (CDCP(111),IERR  ) ,(CDCP(779),KCB   )  TRAJ0011
     1                          ,(CDCP(687),IFEMP ) ,(CDCP(771),NCB   )  TRAJ0012
     2    ,(CDCP( 17),CBODY ) ,(CDCP(663),IFPLNT) ,(CDCP(677),NRSOUT)   TRAJ0013
     3    ,(CDCP(899),CBRAN2) ,(CDCP(758),INDSTA) ,(CDCP( 15),SPDLT )   TRAJ0014
     4    ,(CDCP(112),ETAPE ) ,(CDCP(674),ITARGT) ,(CDCP(123),STIMNX)   TRAJ0015
     5    ,(CDCP(777),ICB   ) ,(CDCP(778),JCB   ) ,(CDCP(781),STIMR )   TRAJ0016
      EQUIVALENCE        (IFEMP( 3),IFATMD) ,(IFEMP( 1),IFGRAV)         TRAJ0017
     1                  ,(IFEMP( 8),IFBODY) ,(IFEMP( 6),IFHARM)         TRAJ0018
     2                  ,(IFEMP( 7),IFDRAG)                             TRAJ0019
C                                                                       TRAJ0020
      COMMON             /EDTCOM/INDDAT(40),BUFDAT(85,6)                TRAJ0021
      DOUBLE PRECISION    ONTIME                                        TRAJ0022
      EQUIVALENCE        (INDDAT(13),ONTIME)                            TRAJ0023
C                                                                       TRAJ0024
      COMMON             /ESRCOM/CESR(304)                              TRAJ0025
      DOUBLE PRECISION    DELDAR (2) ,EHADAR(24,3) ,SER(14,2)           TRAJ0026
     1                   ,EFEDAR(14) ,ETIMVA        ,SPCDAR(6)         TRAJ0027
      EQUIVALENCE                (CESR(101),EHADAR) ,(CESR(  2),NBY   )  TRAJ0028
     1                          ,(CESR( 29),ETIMVA) ,(CESR(245),SER   )  TRAJ0029
     2    ,(CESR( 97),DELDAR) ,(CESR(  3),NBD   ) ,(CESR( 49),SPCDAR)   TRAJ0030
     3    ,(CESR( 61),EFEDAR) ,(CESR(  4),NBX   )                       TRAJ0031
C                                                                       TRAJ0032
      COMMON             /SB3COM/CSBF(12),RBF(6),VBF(6,8)               TRAJ0033
      DOUBLE PRECISION    RBF ,VBF ,TBF                                 TRAJ0034
      EQUIVALENCE        (CSBF( 1),KBF   ) ,(CSBF( 2),NTP   )           TRAJ0035
     1                  ,(CSBF( 5),LCB   ) ,(CSBF( 9),TBF   )           TRAJ0036
C                                                                       TRAJ0037
      COMMON             /TRJCOM/CTRJ(246)                              TRAJ0038
      DOUBLE PRECISION    CBOD(37) ,RC(3) ,ZH(24)                       TRAJ0039
     1                   ,CBU       ,VC(3) ,ETFMS                       TRAJ0040
      EQUIVALENCE                (CTRJ( 99),NZH   ) ,(CTRJ(151),RC    )  TRAJ0041
     1    ,(CTRJ( 77),CBOD  ) ,(CTRJ(101),NTH   ) ,(CTRJ(157),VC    )   TRAJ0042
     2    ,(CTRJ( 85),CBU   ) ,(CTRJ(  1),ETFMS ) ,(CTRJ(103),ZH    )   TRAJ0043
C                                                                       TRAJ0044
      COMMON             /DQ3COM/NDEQ(10),CDEQ(10),ETIMV(4)             TRAJ0045
     1                          ,ADEQ (8),RDEQ (8),VDEQ (8),FDEQ(8,10)  TRAJ0046
      DOUBLE PRECISION    ETIMV,ADEQ,RDEQ,VDEQ,FDEQ                     TRAJ0047
C                                                                       TRAJ0048
      COMMON             /DFMCOM/IFM(14),RFM(6,12)                      TRAJ0049
     1                          ,DFM (4),BFM (577),SNT(2,102)           TRAJ0050
      DOUBLE PRECISION    BFM,DFM,RFM                                   TRAJ0051
C                                                                       TRAJ0052
      COMMON              SAVE(12),D(6)                                 TRAJ0053
      DOUBLE PRECISION    D                                             TRAJ0054
C                                                                       TRAJ0055
      DIMENSION           ND(5,2) ,NN(3)                                TRAJ0056
      DOUBLE PRECISION    ETIMR1 ,OBL50                                 TRAJ0057
      DATA                ND/1,1,3,1,2,0,1,3*0/                         TRAJ0058
      DATA                NN/11,3,0/                                    TRAJ0059
      DATA                OBL50/0.4092061925430292/                     TRAJ0060
C                                                                       TRAJ0061
  601 FORMAT(12H0PATCH FROM ,A6,4H TO ,A6)                              TRAJ0062
C                                                                       TRAJ0063
C     INITIALIZATION                                                    TRAJ0064
C                                                                       TRAJ0065
    1 ICB = NBY                                                         TRAJ0066
      LCB = NBY-100*(NBY/100)                                           TRAJ0067
      IF (ICB.NE.LCB)     ICB = 3                                       TRAJ0068
      JCB = 3                                                           TRAJ0069
      IF (LCB.EQ. 3)      JCB = 1                                       TRAJ0070
      IF (LCB.EQ.11)      JCB = 2                                       TRAJ0071
      NN(3) = ITARGT                                                    TRAJ0072
      KCB = NN(JCB)                                                     TRAJ0073
      DO 2 I=1,10                                                       TRAJ0074
```

```
      IFM(I) = 0                                                        TRAJ0075
    2 IF(IFPLNT(I).NE.0) IFM(I) = 1                                     TRAJ0076
      IFM( 3) = 2                                                       TRAJ0077
      IFM(11) = 2                                                       TRAJ0078
      IFM(12) = 2                                                       TRAJ0079
      IFM(13) = 1                                                       TRAJ0080
      NDEQ(6) = 3                                                       TRAJ0081
      CDEQ(6) = 1.E20                                                   TRAJ0082
      CDEQ(7) = 1.E-5                                                   TRAJ0083
      ETIMV(1) = ETIMVA                                                 TRAJ0084
      ETIMV(2) = 1.D20                                                  TRAJ0085
      ETIMV(3) = 1.D20                                                  TRAJ0086
      DO 3 I=1,6                                                        TRAJ0087
    3 RC(I) = SPCDAR(I)                                                 TRAJ0088
    6 IF (STIMR(1).EQ.0.D0)   STIMR(1) = STIMNX(INDSTA)                 TRAJ0089
      IF (STIMR(1).LT.ONTIME) STIMR(1) = ONTIME                         TRAJ0090
      D(1)   = STIMR(1)+SER(4,1)+SER(5,1)*STIMR(1)                      TRAJ0091
      ETIMR1 = D(1)+DELDAR(1)+DELDAR(2)*D(1)                            TRAJ0092
C                                                                       TRAJ0093
C     PATCH TO CENTRAL BODY                                             TRAJ0094
C                                                                       TRAJ0095
  100 IFM(LCB) = 2                                                      TRAJ0096
      CALL DPFMRS (ETIMV,EFEDAR,LCB,IERR,ETAPE)                         TRAJ0097
      IF (IERR.NE.0)      GO TO 998                                     TRAJ0098
      DO 101 I=1,3                                                      TRAJ0099
      RC(I) = RC(I)+RFM(I,ICB)                                          TRAJ0100
  101 VC(I) = VC(I)+RFM(I+3,ICB)                                        TRAJ0101
      IF (ICB.NE.LCB)     IFM(ICB) = 1                                  TRAJ0102
      IFM( 3) = 2                                                       TRAJ0103
      IFM(11) = 2                                                       TRAJ0104
      ICB = LCB                                                         TRAJ0105
C                                                                       TRAJ0106
C     LOAD CENTRAL BODY WORKING STORAGE                                 TRAJ0107
C                                                                       TRAJ0108
  110 DO 111 I=1,4                                                      TRAJ0109
  111 CBOD(I) = CBODY(I,ICB)                                            TRAJ0110
      DO 112 I=1,2                                                      TRAJ0111
      CBOD(I+5) = CBODY(I+4,ICB)                                        TRAJ0112
  112 CBOD(I+8) = CBODY(I+6,ICB)                                        TRAJ0113
      CBOD( 5) = EFEDAR(ICB)                                            TRAJ0114
      CBOD(11) = OBL50                                                  TRAJ0115
      NZH = NCB(JCB,1)                                                  TRAJ0116
      NTH = NCB(JCB,2)                                                  TRAJ0117
      DO 113 I=1,24                                                     TRAJ0118
  113 ZH(I) = FHADAR(I,JCB)                                             TRAJ0119
C                                                                       TRAJ0120
C     SET CENTRAL BODY SWITCHES                                         TRAJ0121
C                                                                       TRAJ0122
  120 IFHARM = 0                                                        TRAJ0123
      IF (IFGRAV.EQ.0)    GO TO 122                                     TRAJ0124
      IF (NBX.NE.ICB.AND.JCB.EQ.3) GO TO 122                            TRAJ0125
      IF (NZH.NE.0)       IFHARM = 4                                    TRAJ0126
      IF (NTH.NE.0)       IFHARM = 5                                    TRAJ0127
  122 CONTINUE                                                          TRAJ0128
      IFDRAG = 0                                                        TRAJ0129
      IF (IFATMD.EQ.0)    GO TO 123                                     TRAJ0130
      IF (NBD.NE.ICB)     GO TO 123                                     TRAJ0131
      IFDRAG = IFATMD                                                   TRAJ0132
  123 CONTINUE                                                          TRAJ0133
      IFBODY = IFHARM+IFDRAG                                            TRAJ0134
C                                                                       TRAJ0135
C     RECTIFY                                                           TRAJ0136
C                                                                       TRAJ0137
  200 CALL STEPDI (ETIMV,RC,CRU)                                        TRAJ0138
      DO 201 I=1,3                                                      TRAJ0139
      RDEQ(I) = 0.D0                                                    TRAJ0140
  201 VDEQ(I) = 0.D0                                                    TRAJ0141
C                                                                       TRAJ0142
C     ESTIMATE DOWN-LEG DELAY TIME                                      TRAJ0143
C                                                                       TRAJ0144
  210 CONTINUE                                                          TRAJ0145
      IF (KBF.NE.0)       GO TO 220                                     TRAJ0146
      CALL STEPDT (ETIMR1,D)                                            TRAJ0147
      IF (ICB.EQ.3)       GO TO 212                                     TRAJ0148
      DO 211 I=1,3                                                      TRAJ0149
```

```
  211 D(I) = D(I)-RFM(I,3)                                          TRAJ0150
  212 VBF(6,1) = DNORM(D)/SPDLT                                     TRAJ0151
      TBF = ETIMR1-VBF(6,1)                                         TRAJ0152
C                                                                   TRAJ0153
C     SET INTEGRATION INTERVAL                                      TRAJ0154
C                                                                   TRAJ0155
  220 CONTINUE                                                      TRAJ0156
      CBRAN2 = DDOT(RC,RC)                                          TRAJ0157
      D(1) = DSQRT(CBRAN2)                                          TRAJ0158
      D(2) = DSQRT(D(1)/CBU)                                        TRAJ0159
      CDEQ(4) = AINT(D(1)*D(2))/2.                                  TRAJ0160
      CDEQ(3) = CDEQ(4)/4.                                          TRAJ0161
      CDEQ(5) = CDEQ(3)/8.                                          TRAJ0162
      CDEQ(1) = CDEQ(3)                                             TRAJ0163
      IF (CDEQ(1).GT.4000.) CDEQ(1) = 4000.                         TRAJ0164
      L = 1                                                         TRAJ0165
      IF (ABS(TBF-ETIMV)/CDEQ(1).LT.2.) NTP = 3                     TRAJ0166
      IF (NTP.NE.3)       GO TO 222                                 TRAJ0167
  221 L = 2                                                         TRAJ0168
      CDEQ(3) = CDEQ(1)                                             TRAJ0169
      CDEQ(4) = CDEQ(1)                                             TRAJ0170
  222 CONTINUE                                                      TRAJ0171
      DO 223 I=1,5                                                  TRAJ0172
  223 NDEQ(I) = ND(I,L)                                             TRAJ0173
C                                                                   TRAJ0174
C     INTEGRATE                                                     TRAJ0175
C                                                                   TRAJ0176
  300 KBF = 0                                                       TRAJ0177
      ETFMS = 0.D0                                                  TRAJ0178
      CALL DEQ3 (ACCTR3,OUTTR3)                                     TRAJ0179
      IF (IERR.NE.0)      GO TO 998                                 TRAJ0180
      NST = NDEQ(9)                                                 TRAJ0181
      IF (NST.EQ.0)       GO TO (999,430,999) ,NTP                  TRAJ0182
      NST = NST-3                                                   TRAJ0183
      GO TO (200,400,410) ,NST                                      TRAJ0184
C                                                                   TRAJ0185
C     SET UP STOP/RESTRAT                                           TRAJ0186
C                                                                   TRAJ0187
C     PATCH OUT                                                     TRAJ0188
  400 IF (ICB.NE.11)      GO TO 401                                 TRAJ0189
      JCB =  1                                                      TRAJ0190
      KCB = 11                                                      TRAJ0191
      LCB =  3                                                      TRAJ0192
      GO TO 420                                                     TRAJ0193
  401 JCB =  3                                                      TRAJ0194
      LCB = 10                                                      TRAJ0195
      KCB = NN(3)                                                   TRAJ0196
      GO TO 420                                                     TRAJ0197
C                                                                   TRAJ0198
C     PATCH IN                                                      TRAJ0199
  410 LCB = KCB                                                     TRAJ0200
      JCB =  3                                                      TRAJ0201
      KCB = 10                                                      TRAJ0202
      IF (LCB.EQ.11)      JCB = 2                                   TRAJ0203
      IF (LCB.NE. 3)      GO TO 420                                 TRAJ0204
      JCB =  1                                                      TRAJ0205
      KCB = 11                                                      TRAJ0206
C                                                                   TRAJ0207
C     IDENTIFY STOP/RESTART POINT                                   TRAJ0208
  420 IF (NRSOUT.EQ.0)    GO TO 100                                 TRAJ0209
      WRITE (6,601)       CBODY(1,ICB) ,CBODY(1,LCB)                TRAJ0210
      GO TO 100                                                     TRAJ0211
C                                                                   TRAJ0212
C     END-TIME                                                      TRAJ0213
  430 NTP = 3                                                       TRAJ0214
      GO TO 100                                                     TRAJ0215
C                                                                   TRAJ0216
  998 IERR = IERR+15                                                TRAJ0217
  999 RETURN                                                        TRAJ0218
      END
```

Subroutine: TRAJDP

Purpose: Controls the integration of the equations of motion and the variational equations for the DCP propagation/estimation link.

Calling Sequence: CALL TRAJDP

Common storages used: //18 cells, /DCPCØM/,/DFMCØM/,/DQDCØM/,/EDTCØM/, /ESTCØM/,/SBFCØM/,/TRJCØM/

Subroutines required: ACCTRJ, DATINP, DDØT, DEQD, DNØRM, DPFMRS, ØUTTRJ, STEPDI, STEPDP, STEPDT

Description

TRAJDP loads the necessary constants and controls for the integration of the equations of motion and the variational equations and for the accumulation of interpolation tables for the DCP propagation/estimation link. It initializes the integration tables, shifts central bodies, and rectifies the Encke integration as required.

The accelerations and the variational equation derivatives are computed by ACCTRJ using the dynamic model described in Appendix D of Reference 1. The integration and testing for stop and restart points (rectification, etc.) is accomplished by DEQD.

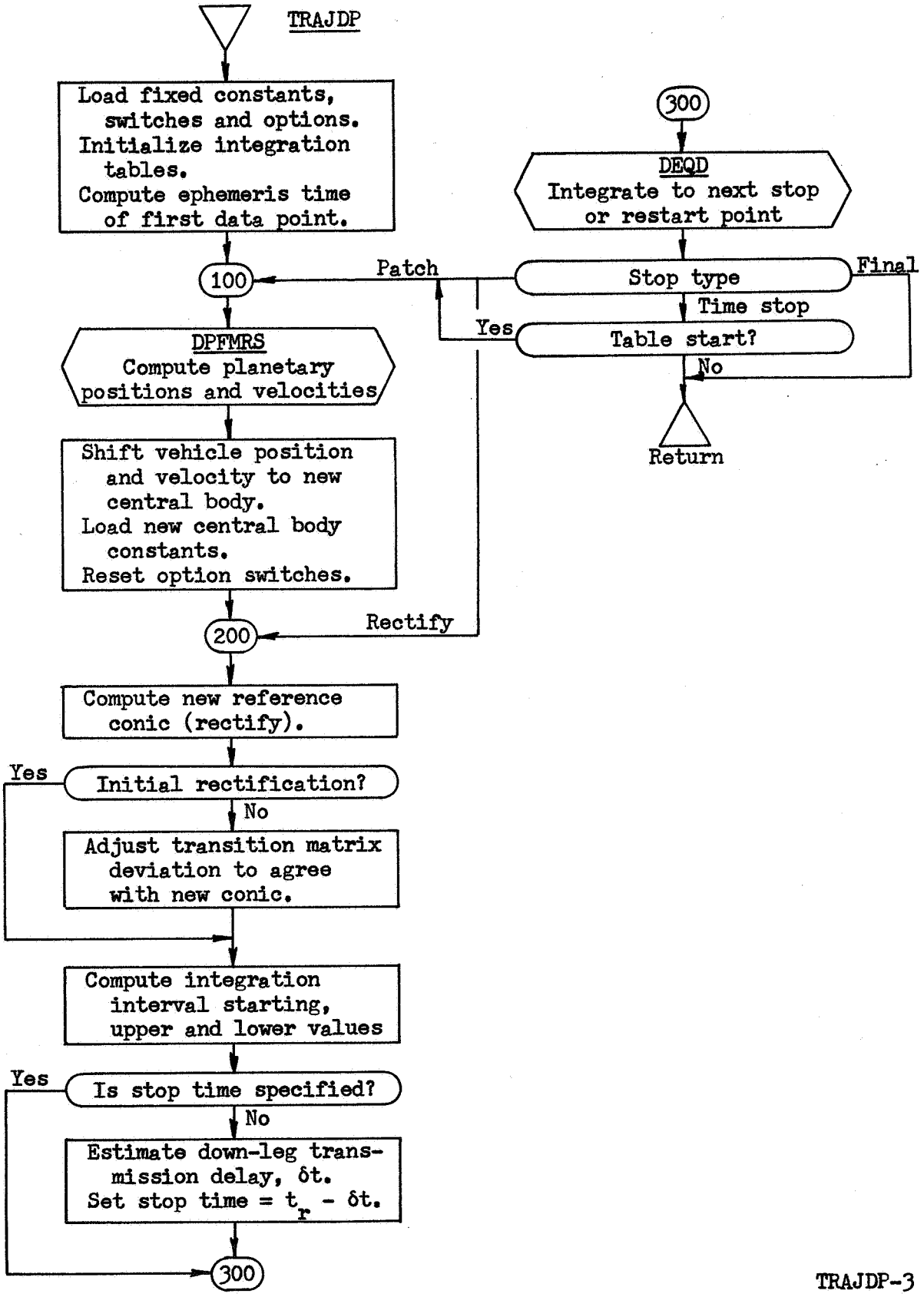
TRAJDP
Load fixed constants, switches and options.
Initialize integration tables.
Compute ephemeris time of first data point.
100
DPFMRS
Compute planetary positions and velocities
Shift vehicle position and velocity to new central body.
Load new central body constants.
Reset option switches.
200
Rectify
Compute new reference conic (rectify).
Yes
Initial rectification?
No
Adjust transition matrix deviation to agree with new conic.
Compute integration interval starting, upper and lower values
Yes
Is stop time specified?
No
Estimate down-leg transmission delay, δt.
Set stop time = t_r - δt.
300
300
DEQD
Integrate to next stop or restart point
Stop type
Patch
Final
Time stop
Yes
Table start?
No
Return

```
$IBFTC MC133F  XR3,M94,NODD,LIST
      SUBROUTINE TRAJDP                                                 TRJP0001
C     INTEGRATION CONTROL ROUTINE FOR DCP ESTIMATION/PROPAGATION        TRJP0002
C                                                                       TRJP0003
      EXTERNAL            ACCTRJ,OUTTRJ                                 TRJP0004
      DOUBLE PRECISION    DNORM,DSQRT                                   TRJP0005
C                                                                       TRJP0006
      COMMON             /DCPCOM/CDCP(900)                              TRJP0007
      DIMENSION           CBODY(8,11) ,IFEMP  (8) ,NCB  (3,2)           TRJP0008
     1                   ,ETAPE   (4) ,IFPLNT(11) ,STIMNX(20)           TRJP0009
      DOUBLE PRECISION    CBRAN2    ,ETIMV1 ,RSTOP ,SPDLT               TRJP0010
     1                   ,DATEV1(3)          ,RSTP2 ,STIMR(2)           TRJP0011
      EQUIVALENCE                 (CDCP(687),IFEMP ) ,(CDCP(676),NPROUT) TRJP0012
     1                          ,(CDCP(663),IFPLNT) ,(CDCP(741),NPSTOP) TRJP0013
     2    ,(CDCP( 17),CBODY ) ,(CDCP(758),INDSTA) ,(CDCP(742),NTARGT)   TRJP0014
     3    ,(CDCP(899),CBRAN2) ,(CDCP(756),IPROCS) ,(CDCP(897),RSTP2 )   TRJP0015
     4    ,(CDCP(801),DATEV1) ,(CDCP(674),ITARGT) ,(CDCP(807),RSTOP )   TRJP0016
     5    ,(CDCP(112),ETAPE ) ,(CDCP(778),JCB   ) ,(CDCP( 15),SPDLT )   TRJP0017
     6    ,(CDCP(785),ETIMV1) ,(CDCP(779),KCB   ) ,(CDCP(123),STIMNX)   TRJP0018
     7    ,(CDCP(777),ICB   ) ,(CDCP(771),NCB   ) ,(CDCP(781),STIMR )   TRJP0019
     8    ,(CDCP(111),IERR  ) ,(CDCP(700),NPEND )                       TRJP0020
      EQUIVALENCE        (IFEMP( 3),IFATMD) ,(IFEMP( 1),IFGRAV)         TRJP0021
     1                  ,(IFEMP( 8),IFBODY) ,(IFEMP( 6),IFHARM)         TRJP0022
     2                  ,(IFEMP( 7),IFDRAG)                             TRJP0023
C                                                                       TRJP0024
      COMMON             /EDTCOM/INDDAT(40),BUFDAT(85,6)                TRJP0025
      DOUBLE PRECISION    ONTIME                                        TRJP0026
      EQUIVALENCE        (INDDAT(13),ONTIME)                            TRJP0027
C                                                                       TRJP0028
      COMMON             /ESTCOM/CEST(804)                              TRJP0029
      DOUBLE PRECISION    DELDAN (2) ,EHADAN(24,3) ,SE(14,20)           TRJP0030
     1                   ,EFEDAN(14) ,ETIMVA       ,SPCDAN(6)           TRJP0031
      EQUIVALENCE                 (CEST(101),EHADAN) ,(CEST(  2),NBY   ) TRJP0032
     1                          ,(CEST( 29),ETIMVA) ,(CEST(245),SE    ) TRJP0033
     2    ,(CEST( 97),DELDAN) ,(CEST(  3),NBD   ) ,(CEST( 49),SPCDAN)   TRJP0034
     3    ,(CEST( 61),EFEDAN) ,(CEST(  4),NBX   )                       TRJP0035
C                                                                       TRJP0036
      COMMON             /SBFCOM/CSBF(12),RBF(45),VBF(45,8)             TRJP0037
      DOUBLE PRECISION    RBF ,VBF ,TBF ,PHI(6,6)                       TRJP0038
      EQUIVALENCE        (VBF(1,2),PHI)                                 TRJP0039
      EQUIVALENCE        (CSBF( 1),KBF   ) ,(CSBF( 2),NTP   )           TRJP0040
     1                  ,(CSBF( 5),LCB   ) ,(CSBF( 9),TBF   )           TRJP0041
C                                                                       TRJP0042
      COMMON             /TRJCOM/CTRJ(246)                              TRJP0043
      DOUBLE PRECISION    CBOD(37) ,RC(3) ,ZH(24) ,PCONIC(6,6)          TRJP0044
     1                   ,CBU      ,VC(3) ,ETFMS  ,RCONIC  (6)         TRJP0045
      EQUIVALENCE                 (CTRJ( 99),NZH   ) ,(CTRJ(151),RC    ) TRJP0046
     1    ,(CTRJ( 77),CBOD  ) ,(CTRJ(101),NTH   ) ,(CTRJ(157),VC    )   TRJP0047
     2    ,(CTRJ( 85),CBU   ) ,(CTRJ(175),PCONIC) ,(CTRJ(103),ZH    )   TRJP0048
     3    ,(CTRJ(  1),ETFMS ) ,(CTRJ(163),RCONIC)                       TRJP0049
C                                                                       TRJP0050
      COMMON             /DQDCOM/NDEQ(10),CDEQ(10),ETIMV(4)             TRJP0051
     1                          ,ADEQ(44),RDEQ(44),VDEQ(44),FDEQ(44,10) TRJP0052
      DOUBLE PRECISION    ETIMV,ADEQ,RDEQ,VDEQ,FDEQ                     TRJP0053
C                                                                       TRJP0054
      COMMON             /DFMCOM/IFM(14),RFM(6,12)                      TRJP0055
     1                          ,DFM (4),BFM (577),SNT(2,102)           TRJP0056
      DOUBLE PRECISION    BFM,DFM,RFM                                   TRJP0057
C                                                                       TRJP0058
      COMMON              SAVE(12),S(6)                                 TRJP0059
      DOUBLE PRECISION    D(3)                                          TRJP0060
      EQUIVALENCE        (S,D)                                          TRJP0061
C                                                                       TRJP0062
      DIMENSION           ND(5,2) ,NN(3)                                TRJP0063
      DOUBLE PRECISION    ETIMR1 ,OBL50                                 TRJP0064
      DATA                ND/1,1,3,1,2,0,1,3*0/                         TRJP0065
      DATA                NN/11,3,0/                                    TRJP0066
      DATA                OBL50/0.4092061925430292/                     TRJP0067
C                                                                       TRJP0068
  601 FORMAT(12HOPATCH FROM ,A6,4H TO ,A6)                              TRJP0069
  602 FORMAT(21HOTRAJECTORY END POINT)                                  TRJP0070
C                                                                       TRJP0071
C     INITIALIZATION                                                    TRJP0072
C                                                                       TRJP0073
    1 ICB = NBY                                                         TRJP0074
```

```
      ITP = NBY/100                                                     TRJP0075
      LCB = NBY-100*ITP                                                 TRJP0076
      IF (ICB.NE.LCB)     ICB = 3                                       TRJP0077
      JCB = 3                                                           TRJP0078
      IF (LCB.EQ. 3)      JCB = 1                                       TRJP0079
      IF (LCB.EQ.11)      JCB = 2                                       TRJP0080
      NN(3) = ITARGT                                                    TRJP0081
      IF (IPROCS.EQ.1.AND.NTARGT.NE.0)  NN(3) = NTARGT                  TRJP0082
      KCB = NN(JCB)                                                     TRJP0083
      DO 2 I=1,10                                                       TRJP0084
      IFM(I) = 0                                                        TRJP0085
    2 IF(IFPLNT(I).NE.0) IFM(I) = 1                                     TRJP0086
      IFM( 3) = 2                                                       TRJP0087
      IFM(11) = 2                                                       TRJP0088
      IFM(12) = 2                                                       TRJP0089
      IFM(13) = 1                                                       TRJP0090
      NDEQ(6) = NPEND-1                                                 TRJP0091
      NDEQ(8) = 0                                                       TRJP0092
      CDEQ(6) = 1.E20                                                   TRJP0093
      CDEQ(7) = 1.E-5                                                   TRJP0094
      ETIMV(1) = ETIMVA                                                 TRJP0095
      ETIMV(2) = 1.D20                                                  TRJP0096
      ETIMV(3) = 1.D20                                                  TRJP0097
      IF (IPROCS+NPSTOP.EQ.1) ETIMV(2) = STIMR(2)                       TRJP0098
      DO 3 I=1,6                                                        TRJP0099
      RBF(I+42)    = 0.D0                                               TRJP0100
      VBF(I+42,1) = 0.D0                                                TRJP0101
    3 RC(I) = SPCDAN(I)                                                 TRJP0102
      DO 4 I=5,NPEND                                                    TRJP0103
      RDEQ(I-1) = 0.D0                                                  TRJP0104
    4 VDEQ(I-1) = 0.D0                                                  TRJP0105
      IF (IPROCS.EQ.1)    GO TO 100                                     TRJP0106
      IF (KBF.NE.0)       GO TO 6                                       TRJP0107
      DO 5 I=1,3                                                        TRJP0108
    5 S(I) = DATEV1(I)                                                  TRJP0109
      CALL DATINP (S,ETIMV1)                                            TRJP0110
      IF (ETIMV1.EQ.ETIMVA) GO TO 6                                     TRJP0111
      NTP = 1                                                           TRJP0112
      ETIMV(2) = ETIMV1                                                 TRJP0113
      GO TO 100                                                         TRJP0114
    6 IF (STIMR(1).EQ.0.D0)    STIMR(1) = STIMNX(INDSTA)                TRJP0115
      IF (STIMR(1).LT.ONTIME) STIMR(1) = ONTIME                         TRJP0116
      D(1)    = STIMR(1)+SE(4,INDSTA)+SE(5,INDSTA)*STIMR(1)             TRJP0117
      ETIMR1 = D(1)+DELDAN(1)+DELDAN(2)*D(1)                            TRJP0118
C                                                                       TRJP0119
C     PATCH TO CENTRAL BODY                                             TRJP0120
C                                                                       TRJP0121
  100 IFM(LCB) = 2                                                      TRJP0122
      CALL DPFMRS (ETIMV,EFEDAN,LCB,IERR,ETAPE)                         TRJP0123
      IF (IERR.NE.0)      GO TO 998                                     TRJP0124
      DO 101 I=1,3                                                      TRJP0125
      RC(I) = RC(I)+RFM(I,ICB)                                          TRJP0126
  101 VC(I) = VC(I)+RFM(I+3,ICB)                                        TRJP0127
      IF (ICB.EQ.LCB)     GO TO 103                                     TRJP0128
      IFM(ICB) = 1                                                      TRJP0129
      IF (ITP.EQ.0)       GO TO 103                                     TRJP0130
      DO 102 I=1,3                                                      TRJP0131
      RBF(I+42)    = RFM(I  ,3)                                         TRJP0132
  102 VBF(I+42,1) = RFM(I+3,3)                                          TRJP0133
  103 IFM( 3) = 2                                                       TRJP0134
      IFM(11) = 2                                                       TRJP0135
      ICB = LCB                                                         TRJP0136
C                                                                       TRJP0137
C     LOAD CENTRAL BODY WORKING STORAGE                                 TRJP0138
C                                                                       TRJP0139
  110 DO 111 I=1,4                                                      TRJP0140
  111 CBOD(I) = CBODY(I,ICB)                                            TRJP0141
      DO 112 I=1,2                                                      TRJP0142
      CBOD(I+5) = CBODY(I+4,ICB)                                        TRJP0143
  112 CBOD(I+8) = CBODY(I+6,ICB)                                        TRJP0144
      CBOD( 5) = EFEDAN(ICB)                                            TRJP0145
      CBOD(11) = OBL50                                                  TRJP0146
      NZH = NCB(JCB,1)                                                  TRJP0147
      NTH = NCB(JCB,2)                                                  TRJP0148
      DO 113 I=1,24                                                     TRJP0149
```

```
  113 ZH(I) = EHADAN(I,JCB)                                          TRJP0150
C                                                                    TRJP0151
C     SET CENTRAL BODY SWITCHES                                      TRJP0152
C                                                                    TRJP0153
  120 IFHARM = 0                                                     TRJP0154
      IF (IFGRAV.EQ.0)    GO TO 122                                  TRJP0155
      IF (NBX.NE.ICB.AND.JCB.EQ.3) GO TO 122                         TRJP0156
      IF (NZH.NE.0)       IFHARM =-4                                 TRJP0157
      IF (NTH.NE.0)       IFHARM =-5                                 TRJP0158
  122 CONTINUE                                                       TRJP0159
      IFDRAG = 0                                                     TRJP0160
      IF (IFATMD.EQ.0)    GO TO 123                                  TRJP0161
      IF (NBD.NE.ICB)     GO TO 123                                  TRJP0162
      IFDRAG = IFATMD                                                TRJP0163
  123 CONTINUE                                                       TRJP0164
      IFBODY = IFHARM+IFDRAG                                         TRJP0165
      RSTP2 = 0.D0                                                   TRJP0166
      ND(3,1) = 3                                                    TRJP0167
      IF (IPROCS.NE.1)    GO TO 126                                  TRJP0168
      IF (NPSTOP-2)       126,125,124                                TRJP0169
  124 ND(3,1) = 5                                                    TRJP0170
      GO TO 126                                                      TRJP0171
  125 ND(3,1) = 4                                                    TRJP0172
      RSTP2 = RSTOP*RSTOP                                            TRJP0173
  126 CONTINUE                                                       TRJP0174
      IF (NPEND.LE.22)    GO TO 200                                  TRJP0175
      DO 127 I=23,NPEND                                              TRJP0176
  127 ADEQ(I-1) = 0.D0                                               TRJP0177
C                                                                    TRJP0178
C     RECTIFY                                                        TRJP0179
C                                                                    TRJP0180
  200 CALL STEPDI (ETIMV,RC,CBU)                                     TRJP0181
      DO 201 I=1,3                                                   TRJP0182
      RDEQ(I) = 0.D0                                                 TRJP0183
  201 VDEQ(I) = 0.D0                                                 TRJP0184
      IF (NDEQ(8).EQ.0)  GO TO 210                                   TRJP0185
      CALL STEPDT (ETIMVA,RCONIC)                                    TRJP0186
      CALL STEPDI (ETIMVA,RCONIC,CBU)                                TRJP0187
      CALL STEPDT (ETIMV,RCONIC)                                     TRJP0188
      L = 4                                                          TRJP0189
      DO 202 J=1,6                                                   TRJP0190
      DO 202 I=1,3                                                   TRJP0191
      PHI(I  ,J) = PCONIC(I  ,J)+RDEQ(L)                             TRJP0192
      PHI(I+3,J) = PCONIC(I+3,J)+VDEQ(L)                             TRJP0193
  202 L = L+1                                                        TRJP0194
      CALL STEPDP (PCONIC)                                           TRJP0195
      L = 4                                                          TRJP0196
      DO 203 J=1,6                                                   TRJP0197
      DO 203 I=1,3                                                   TRJP0198
      RDEQ(L) = PHI(I  ,J)-PCONIC(I  ,J)                             TRJP0199
      VDEQ(L) = PHI(I+3,J)-PCONIC(I+3,J)                             TRJP0200
  203 L = L+1                                                        TRJP0201
C                                                                    TRJP0202
C     SET INTEGRATION INTERVAL                                       TRJP0203
C                                                                    TRJP0204
  210 CONTINUE                                                       TRJP0205
      CBRAN2 = DDOT(RC,RC)                                           TRJP0206
      D(1) = DSQRT(CBRAN2)                                           TRJP0207
      D(2) = DSQRT(D(1)/CBU)                                         TRJP0208
      CDEQ(4) = AINT(D(1)*D(2))/2.                                   TRJP0209
      CDEQ(3) = CDEQ(4)/4.                                           TRJP0210
      CDEQ(5) = CDEQ(3)/8.                                           TRJP0211
      CDEQ(1) = CDEQ(3)                                              TRJP0212
      L = 1                                                          TRJP0213
C                                                                    TRJP0214
C     ESTIMATE DOWN-LEG DELAY TIME                                   TRJP0215
C                                                                    TRJP0216
  220 CONTINUE                                                       TRJP0217
      IF (NTP.EQ.1)       GO TO 224                                  TRJP0218
      IF (KBF.NE.0)       GO TO 223                                  TRJP0219
      CALL STEPDT (ETIMR1,D)                                         TRJP0220
      IF (ICB.EQ.3)       GO TO 222                                  TRJP0221
      DO 221 I=1,3                                                   TRJP0222
  221 D(I) = D(I)-RFM(I,3)                                           TRJP0223
  222 VRF(NPEND+2,1) = DNORM(D)/SPDLT                                TRJP0224
```

```
      TBF = ETIMR1-VBF(NPEND+2,1)                                       TRJP0225
  223 IF (CDEQ(1).GT.4000.) CDEQ(1) = 4000.                             TRJP0226
      IF (ABS(TBF-ETIMV)/CDEQ(1).LT.2.) NTP = 3                         TRJP0227
      IF (NTP.NE.3)       GO TO 224                                     TRJP0228
      L = 2                                                             TRJP0229
      CDEQ(3) = CDEQ(1)                                                 TRJP0230
      CDEQ(4) = CDEQ(1)                                                 TRJP0231
  224 DO 225 I=1,5                                                      TRJP0232
  225 NDEQ(I) = ND(I,L)                                                 TRJP0233
C                                                                       TRJP0234
C     INTEGRATE                                                         TRJP0235
C                                                                       TRJP0236
  300 KBF = 0                                                           TRJP0237
      ETFMS = 0.D0                                                      TRJP0238
      CALL DEQD (ACCTRJ,OUTTRJ)                                         TRJP0239
      IF (IERR.NE.0)      GO TO 998                                     TRJP0240
      NST = NDEQ(9)                                                     TRJP0241
      IF (NST.EQ.0)       GO TO (435,430,999) ,NTP                      TRJP0242
      NST = NST-NPEND+1                                                 TRJP0243
      GO TO (200,400,410,425,425) ,NST                                  TRJP0244
C                                                                       TRJP0245
C     SET UP STOP/RESTRAT                                               TRJP0246
C                                                                       TRJP0247
C     PATCH OUT                                                         TRJP0248
  400 IF (ICB.NE.11)      GO TO 401                                     TRJP0249
      JCB =  1                                                          TRJP0250
      KCB = 11                                                          TRJP0251
      LCB =  3                                                          TRJP0252
      GO TO 420                                                         TRJP0253
  401 JCB =  3                                                          TRJP0254
      LCB = 10                                                          TRJP0255
      KCB = NN(3)                                                       TRJP0256
      GO TO 420                                                         TRJP0257
C                                                                       TRJP0258
C     PATCH IN                                                          TRJP0259
  410 LCB = KCB                                                         TRJP0260
      JCB =  3                                                          TRJP0261
      KCB = 10                                                          TRJP0262
      IF (LCB.EQ.11)      JCB = 2                                       TRJP0263
      IF (LCB.NE. 3)      GO TO 420                                     TRJP0264
      JCB =  1                                                          TRJP0265
      KCB = 11                                                          TRJP0266
C                                                                       TRJP0267
C     IDENTIFY STOP/RESTART POINT                                       TRJP0268
  420 IF (NPROUT.EQ.0)    GO TO 421                                     TRJP0269
      WRITE (6,601)       CBODY(1,ICB) ,CBODY(1,LCB)                    TRJP0270
  421 IF (IPROCS.NE.1)    GO TO 100                                     TRJP0271
      IF (NPSTOP.NE.1)    GO TO 100                                     TRJP0272
      IF (LCB.EQ.NN(3))   GO TO 425                                     TRJP0273
      IF (ICB.NE.NN(3))   GO TO 100                                     TRJP0274
  425 IF (NPROUT.NE.0)    WRITE (6,602)                                 TRJP0275
      GO TO 999                                                         TRJP0276
C                                                                       TRJP0277
C     END-TIME                                                          TRJP0278
  430 NTP = 3                                                           TRJP0279
      GO TO 100                                                         TRJP0280
  435 IF (IPROCS.EQ.1)    GO TO 425                                     TRJP0281
      NTP = 2                                                           TRJP0282
      GO TO 999                                                         TRJP0283
C                                                                       TRJP0284
  998 IERR = IERR+15                                                    TRJP0285
  999 RETURN                                                            TRJP0286
      END
```

Subroutine: UPDATP

Purpose: Updates the covariance matrix in time.

Calling Sequence: CALL UPDATP

Common storages used: //72 cells, /DCPCØM/,/ESTCØM/,/ES1CØM/,/SBFCØM/

Subroutines required: DMPLY

Method:

The transition matrix and sensitivities to equation of motion parameters are computed for C-frame components of the vehicle state in the form

$$\varphi(t;t_o) = \begin{bmatrix} \varphi_1 & \varphi_2 & \varphi_u \\ \dot{\varphi}_1 & \dot{\varphi}_2 & \dot{\varphi}_u \end{bmatrix}$$

where

$$\begin{bmatrix} X_C(t) \\ \dot{X}_C(t) \end{bmatrix} = \varphi(t;t_o) \begin{bmatrix} X(t_o) \\ \dot{X}(t_o) \\ u \end{bmatrix}$$

X_C = deviation in vehicle position with respect to Earth, C-frame components,

$X(t_o)$ = deviation in position at the anchor point time, t_o, in the coordinates of SPCDAN.

Let T_{X2Z} be an orthogonal transformation

$$X = T_{X2Z} X_C$$

and let Z be the deviation in the extended state vector

$$Z(t) = \begin{bmatrix} T_{X2Z}\, X_C \\ T_{X2Z}\, \dot{X}_C \\ u \\ v \end{bmatrix}$$

The extended state vector obeys

$$Z = \Phi(t;t_o)Z(t_o)$$

$$\Phi = \begin{bmatrix} \varphi'(t;t_o) & & \phi \\ \phi & I & \phi \\ \phi & \phi & I \end{bmatrix}$$

and the covariance matrix

$$P(t) = \Phi(t;t_o)P(t_o)\Phi^T(t;t_o)$$

where

$$\varphi'(t;t_o) = \begin{bmatrix} T_{X2Z} & \phi \\ \phi & T_{X2Z} \end{bmatrix} \varphi(t;t_0)$$

Usage:

The subroutine UPDATP is called at two logical points, identified by NTP. In each case, the 3 X N matrices $[\varphi_1, \varphi_2, \varphi_u]$ and $[\dot{\varphi}_1, \dot{\varphi}_2, \dot{\varphi}_3]$ are stored in RBF(4) to RBF(3N+3) and VBF(4,1) to VBF(3N+3,1), respectively.

The two points are:

NTP = 1 : End-point of progagation.
$P(t_o)$ is read **from** unit 09, and $P(t)$ is required for output on unit 06, only.

NTP = 2 : Anchor-point for data processing has been **reached.**
$P(t_o)$ is read from unit 09, and $P(t)$ is required for output on unit 06 and as the a priori covariance for data processing.

```
$IBFTC MC138A  XR3,M94,NODD,LIST
      SUBROUTINE UPDATP                                                 UPDP0001
C     UPDATES THE COVARIANCE MATRIX IN TIME                             UPDP0002
C                                                                       UPDP0003
      COMMON              /DCPCOM/CDCP(900)                             UPDP0004
      EQUIVALENCE         (CDCP(105),MAXZ  ) ,(CDCP(740),NPREST)        UPDP0005
     1                   ,(CDCP(702),NEMPS )                            UPDP0006
C                                                                       UPDP0007
      COMMON              /ESTCOM/CEST(804)                             UPDP0008
      EQUIVALENCE         (CEST( 27),KOUNTN) ,(CEST( 31),TX2Z  )        UPDP0009
C                                                                       UPDP0010
      COMMON              /ES1COM/PNEW(30,30),STNAMN(30),TRAKER(30)     UPDP0011
     1                           ,ITRETN (30),ILOCN (30),KLOCN (54)     UPDP0012
     2                           ,NSN (12,20)                           UPDP0013
      DOUBLE PRECISION     PNEW                                         UPDP0014
      DIMENSION            DEST(2214)                                   UPDP0015
      EQUIVALENCE         (PNEW,DEST)                                   UPDP0016
C                                                                       UPDP0017
      COMMON              /SBFCOM/CSBF(12),RBF(45),VBF(45,8)            UPDP0018
      DOUBLE PRECISION     RBF,VBF,PHI(6,12)                            UPDP0019
      EQUIVALENCE         (VBF(1,2),PHI)                                UPDP0020
C                                                                       UPDP0021
      COMMON               D(6,6)                                       UPDP0022
      DOUBLE PRECISION     D                                            UPDP0023
C                                                                       UPDP0024
C     READ IN OLD COVARIANCE MATRIX                                     UPDP0025
    1 IF (NPREST.EQ.0) GO TO  2                                         UPDP0026
      READ (12) DEST                                                    UPDP0027
      IF (NTP.LE.1)     GO TO 10                                        UPDP0028
      WRITE (9) DEST                                                    UPDP0029
      GO TO 3                                                           UPDP0030
    2 READ  (9) DEST                                                    UPDP0031
    3 BACKSPACE 9                                                       UPDP0032
C                                                                       UPDP0033
C     TRANSFORM TRANSITION MATRIX                                       UPDP0034
   10 IF (KLOCN(1).NE.1) GO TO 999                                      UPDP0035
      CALL DMPLY (TX2Z,RBF( 4)  ,PHI(1,1),3,3,3,3,3,6,0)                UPDP0036
      CALL DMPLY (TX2Z,RBF(13)  ,PHI(1,4),3,3,3,3,3,6,0)                UPDP0037
      CALL DMPLY (TX2Z,VBF( 4,1),PHI(4,1),3,3,3,3,3,6,0)                UPDP0038
      CALL DMPLY (TX2Z,VBF(13,1),PHI(4,4),3,3,3,3,3,6,0)                UPDP0039
      IF (NEMPS.EQ.0)    GO TO 20                                       UPDP0040
      CALL DMPLY (TX2Z,RBF(22)  ,PHI(1,7),3,3,NEMPS,3,3,6,0)            UPDP0041
      CALL DMPLY (TX2Z,VBF(22,1),PHI(4,7),3,3,NEMPS,3,3,6,0)            UPDP0042
C                                                                       UPDP0043
C     UPDATE COVARIANCE MATRIX                                          UPDP0044
   20 L = 6+NEMPS                                                       UPDP0045
      CALL DMPLY (PHI,PNEW,D,6,L,6,6,MAXZ,6,0)                          UPDP0046
      M = KOUNTN-6                                                      UPDP0047
      IF (M.GT.0) GO TO 21                                              UPDP0048
      CALL DMPLY (D,PHI,PNEW,6,6,6,6,6,MAXZ,2)                          UPDP0049
      GO TO 999                                                         UPDP0050
   21 CALL DMPLY (PNEW(1,7),PHI,PNEW(7,1),M,L,6,MAXZ,6,MAXZ,3)          UPDP0051
      DO 22 I=1,6                                                       UPDP0052
      DO 22 J=1,6                                                       UPDP0053
   22 PNEW(I,J) = D(I,J)                                                UPDP0054
      DO 23 I=7,KOUNTN                                                  UPDP0055
      DO 23 J=1,6                                                       UPDP0056
   23 PNEW(J,I) = PNEW(I,J)                                             UPDP0057
      CALL DMPLY (PNEW,PHI,D,6,L,6,MAXZ,6,6,2)                          UPDP0058
      DO 24 I=1,6                                                       UPDP0059
      DO 24 J=I,6                                                       UPDP0060
      PNEW(I,J) = D(I,J)                                                UPDP0061
   24 PNEW(J,I) = D(I,J)                                                UPDP0062
C                                                                       UPDP0063
  999 RETURN                                                            UPDP0064
      END
```

Subroutine: VENTD

Purpose: To compute the acceleration due to venting.

Calling Sequences: CALL VENTD (V,T,A)

Input and Output

I/Ø	Symbolic Name or Location	Program Dimensions	Math Symbol	Data Dimensions or Units	Definitions
I	V	d(3)	V	km/sec	Vehicle velocity.
I	T	d	T/m	km/sec^2	Thrust-to-mass ratio.
IØ	A	d(3)	A	km/sec^2	Acceleration.

Common storages used: None

Subroutines required: DDØT

```
$IBFTC MC132V  XR3,M94,NODD,LIST
      SUBROUTINE VENTD (V,T,A)                                          VENT0001
C     ACCELERATION DUE TO VENTING                                       VENT0002
      DOUBLE PRECISION  A(3),C,T,V(3),DDOT,DSQRT                        VENT0003
C                                                                       VENT0004
    1 C = DDOT(V,V)                                                     VENT0005
      C = DSQRT(C)                                                      VENT0006
      C = T/C                                                           VENT0007
      DO 2 I=1,3                                                        VENT0008
    2 A(I) = A(I)+C*V(I)                                                VENT0009
  999 RETURN                                                            VENT0010
      END
```

Subroutine: VENTDP

Purpose: To compute the acceleration due to venting, its gradient and its partial derivative with respect to the acceleration magnitude.

Calling Sequence: CALL VENTDP (V,T,A,AP,G,N)

Input and Output

I/Ø	Symbolic Name or Location	Program Dimensions	Math Symbol	Data Dimensions or Units	Definition
I	V	d(3)	V	km/sec	Vehicle velocity.
I	T	d	T/m	km/sec^2	Thrust to mass ratio.
IØ	A	d(3)	A	km/sec^2	Acceleration.
Ø	AP	d(3)	$\frac{\partial A}{\partial (T/m)}$		
Ø	G	d(3,3)	$\nabla_v A$	1/sec	Velocity gradient of the acceleration.
I	N				Option =0: acceleration only ≠0: $\partial A/\partial(T/m)$ and $\nabla_v A$

Common storages used: 10 cells

Subroutines required: DDØT, DVNØRM

Method

The subroutine computes and adds to the input acceleration a thrust acceleration of constant magnitude in the direction of the vehicle velocity relative to the central body. That is,

$$A = \frac{T}{m} \frac{V}{|V|}$$

where (T/m) is the constant magnitude and V is the velocity vector. The gradient with respect to velocity of this acceleration is computed, if $N \neq 0$, from

$$\nabla_V A = \frac{T}{m} \frac{1}{|V|} \left(I - \frac{VV^T}{V^2} \right)$$

and the partial derivative is the unit vector

$$\frac{\partial A}{\partial (T/m)} = \frac{V}{|V|}$$

computed if $N < 0$.

```
$IBFTC MC132W  XR3,M94,NODD,LIST
      SUBROUTINE VENTDP (V,T,A,AP,G,N)                                  VNTP0001
C     ACCELERATION DUE TO VENTING                                       VNTP0002
      DOUBLE PRECISION   A(3),AP(3),G(3,3),T,V(3)                       VNTP0003
     1                  ,C,DVNORM                                       VNTP0004
      COMMON             C(5)                                           VNTP0005
C                                                                       VNTP0006
    1 C(4) = DVNORM (V,C)                                               VNTP0007
      IF (N.GE.0) GO TO 3                                               VNTP0008
      DO 2 I=1,3                                                        VNTP0009
    2 AP(I) = C(I)                                                      VNTP0010
    3 DO 4 I=1,3                                                        VNTP0011
    4 A(I) = A(I)+T*C(I)                                                VNTP0012
      IF (N.EQ.0) GO TO 999                                             VNTP0013
      C(4) = T/C(4)                                                     VNTP0014
      DO 5 I=1,3                                                        VNTP0015
      C(5) =-C(4)*C(I)                                                  VNTP0016
      G(I,I) = G(I,I)+C(4)                                              VNTP0017
      DO 5 J=1,3                                                        VNTP0018
    5 G(I,J) = G(I,J)+C(5)*C(J)                                         VNTP0019
  999 RETURN                                                            VNTP0020
      END
```

Subroutine: VNØRM

Purpose: Computes the magnitude of a 3-vector and normalizes the vector.

Calling Sequence: Z = VNØRM (X,Y)

I/Ø	Symbolic Name or Location	Program Dimensions	Math Symbol	Data Dimensions or Units	Definition
I	X	(3)			Input vector
Ø	Y	(3)			Unit vector along X Y = X/Z
Ø	Z				Z = |X|

Common storages used: None

Subroutines required: None

```
$IBFTC VNORM   XR3,M94,NODD
      FUNCTION VNORM(X,Y)
      DIMENSION  X(3) ,Y(3)
      SUM = 0.
      DO 1 I=1,3
    1 SUM = SUM+X(I)*X(I)
      SUM = SQRT(SUM)
      DO 2 I=1,3
    2 Y(I) = X(I)/SUM
      VNORM = SUM
      RETURN
      END
```

```
VNRM0001
VNRM0002
VNRM0003
VNRM0004
VNRM0005
VNRM0006
VNRM0007
VNRM0008
VNRM0009
VNRM0010
VNRM0011
```

Subroutine: VTRN

Purpose: Computes the matrix product of a 3X3 and a 3X1.

Calling Sequence: CALL VTRN(A,B,C)

Input and Output

I/Ø	Symbolic Name or Location	Program Diemsions	Math Symbol	Data Dimensions or Units	Definition
I	A	(3,3)			Multiplier.
I	B	(3)			Input vector.
Ø	C	(3)			AB

Common storages used: None

Subroutines required: None

```
$IBFTC VTRN    XR3,M94,NODD
      SUBROUTINE VTRN(A,B,C)                                    VTRN0001
      DIMENSION  A(3,3) ,B(3) ,C(3)                             VTRN0002
      DO 1 I=1,3                                                VTRN0003
      C(I) = 0.                                                 VTRN0004
      DO 1 K=1,3                                                VTRN0005
    1 C(I) = C(I)+A(I,K)*B(K)                                   VTRN0006
      RETURN                                                    VTRN0007
      END                                                       VTRN0008
```

Subroutine: VTRT

Purpose: Computes the matrix product of a 3X3 and a 3X1.

Calling Sequence: CALL VTRT(A,B,C)

Input and Output

I/Ø	Symbolic Name or Location	Program Dimensions	Math Symbol	Data Dimensions or Units	Definition
I	A	(3,3)			Multiplier.
I	B	(3)			Input vector.
Ø	C	(3)			$A^T B$

Common storages used: None

Subroutines required: None

```
$IBFTC VTRT     XR3,M94,NODD
      SUBROUTINE VTRT(A,B,C)                                    VTRT0001
      DIMENSION  A(3,3) ,B(3) ,C(3)                             VTRT0002
      DO 1 I=1,3                                                VTRT0003
      C(I) = 0.                                                 VTRT0004
      DO 1 K=1,3                                                VTRT0005
    1 C(I) = C(I)+A(K,I)*B(K)                                   VTRT0006
      RETURN                                                    VTRT0007
      END                                                       VTRT0008
```

Subroutine: X2ØRBD

Purpose: To compute orbital elements from Cartesian position and velocity.

Calling Sequence: Call X2ØRDB (XI,XØ,GM)

Input and Output

I/ϕ	Symbolic Name or Location	Program Dimensions	Math Symbol	Data Dimensions or Units	Definition
I	XI	d(6)	R,V	km,km/sec	Cartesian position (1-3) and velocity (4-6).
I	GM	d	μ	km^3/sec^2	Central body gravitational constant.
ϕ	XØ	d(9)			Orbital elements.

Common storates used: 32 cells.
Subroutines required: DCRØSS,DDØT,DVNØRM

Discussion:

The nine components of the output vector, XØ, are the orbital elements

$X\phi(1) = a$ = semi-major axis (km)

$X\phi(2) = e$ = eccentricity

$X\phi(3) = i$ = inclination (rad), with the xy-plane

$X\phi(4) = \Omega$ = longitude (rad) of the ascending node on the xy-plane, from the x-axis.

$X\phi(5) = \omega$ = argument of periapsis (rad)

$X\phi(6) = \theta$ = true anomaly (rad)

$X\phi(7) = p$ = semi latus-rectum (km)

$X\phi(8) = v_h$ = hyperbolic excess velocity (km/sec)

$X\phi(9) = r_p$ = radius of closest approach (km).

They are computed from the Cartesian position (R) and velocity (V), using the equations below. Note that $a < 0$ when $e > 1$ and $v_h < 0$ when $e < 1$.

$$H = R \times V = \mathrm{col}(h_x, h_y, h_z)$$

$$d = R \cdot V/\mu$$

$$a = 1/\left(\frac{2}{r} - \frac{v^2}{\mu}\right)$$

$$e = \sqrt{1 - h^2/\mu a}$$

$$i = \tan^{-1}\left(\sqrt{h_x^2 + h_y^2}/h_z\right)$$

$$\Omega = \tan^{-1}(h_x/(-h_y))$$

$$\omega = \tan^{-1}(zh/(yh_x - xh_y)) - \theta$$

$$\theta = \tan^{-1}(dh/(p - r))$$

$$p = h^2/\mu$$

$$v_h = \sqrt{\mu/|a|}$$

$$r_p = p/(1 + e)$$

```
$IBFTC MC13ZR  XR3,M94,NODD,LIST
      SUBROUTINE X2ORBD (XI,XO,GM)                                      20RB0001
C     COMPUTES ORBITAL ELEMENTS FROM CARTESIAN STATE                    20RB0002
C     XI = INPUT CARTESIAN STATE WRT CENTRAL BODY                       20RB0003
C     XO = OUTPUT ORBITAL ELEMENTS                                      20RB0004
C          1 - SEMI-MAJOR AXIS                                          20RB0005
C          2 - ECCENTRICITY                                             20RB0006
C          3 - INCLINATION                                              20RB0007
C          4 - LONGITUDE OF ASCENDING NODE                              20RB0008
C          5 - ARGUMENT OF PERIAPSIS                                    20RB0009
C          6 - TRUE ANOMALY                                             20RB0010
C          7 - SEMI-LATUS RECTUM                                        20RB0011
C          8 - HYPERBOLIC EXCESS VELOCITY                               20RB0012
C          9 - RADIUS OF CLOSEST APPROACH                               20RB0013
C     GM = GRAVITATIONAL CONSTANT OF CENTRAL BODY                       20RB0014
C                                                                       20RB0015
      DOUBLE PRECISION   XI(6) ,XO(9) ,GM                               20RB0016
     1                  ,TPI   ,EPS                                    20RB0017
     2                  ,DATAN2,DDOT  ,DMOD  ,DSQRT ,DVNORM            20RB0018
     3                  ,D(16)                                         20RB0019
      COMMON             D                                              20RB0020
      DATA TPI,EPS/6.2831853071795864,1.D-13/                           20RB0021
C                                                                       20RB0022
    1 CONTINUE                                                          20RB0023
      D(3) = GM                                                         20RB0024
      CALL DCROSS (XI,XI(4),D(10))                                      20RB0025
      D(4) = DVNORM(XI,D(13))                                           20RB0026
      D(1) = DDOT(XI(4),XI(4))                                          20RB0027
      D(16) = DDOT(XI,XI(4))                                            20RB0028
      D(1) = 2.D0/D(4)-D(1)/D(3)                                        20RB0029
      D(7) = DDOT(D(10),D(10))/D(3)                                     20RB0030
      D(8) = DSQRT(D(3)*DABS(D(1)))                                     20RB0031
      IF (D(1).GT.0.D0) D(8) = -D(8)                                    20RB0032
      D(2) = DSQRT(1.D0-D(7)*D(1))                                      20RB0033
      D(9) = DSQRT(D(3)*D(7))                                           20RB0034
      D(5) = 0.D0                                                       20RB0035
      D(6) = 0.D0                                                       20RB0036
      D(6) = DATAN2(D(15)*D(9),(D(14)*D(10)-D(13)*D(11)))               20RB0037
      IF (D(2).LT.EPS) GO TO 5                                          20RB0038
C     NON-CIRCULAR                                                      20RB0039
      D(5) = D(6)                                                       20RB0040
      D(6) = DATAN2(D(16)*D(9),D(3)*(D(7)-D(4)))                        20RB0041
      D(5) = DMOD(D(5)-D(6),TPI)                                        20RB0042
    5 CONTINUE                                                          20RB0043
      D(3) = DATAN2(DSQRT(D(10)*D(10)+D(11)*D(11)),D(12))               20RB0044
      D(4) = 0.D0                                                       20RB0045
      IF (D(3).LT.EPS) GO TO 6                                          20RB0046
      D(4) = DATAN2(D(10),-D(11))                                       20RB0047
    6 CONTINUE                                                          20RB0048
      D(1) = 1.D0/D(1)                                                  20RB0049
      D(9) = D(7)/(1.D0+D(2))                                           20RB0050
      DO 7 I=1,9                                                        20RB0051
    7 XO(I) = D(I)                                                      20RB0052
      RETURN                                                            20RB0053
      END
```

REFERENCES

1. "Program Description and Theoretical Basis for the Orbit Determination Program," Philco-Ford Corporation, TR-DA1508, Palo Alto, California, December 1967.

2. "Input-Output Summary for the Orbit Determination Program," Philco-Ford Corporation, TR-DA1510, Palo Alto, California, December 1967.