LTV RESEARCH CENTER

NASA CR 92354

LTV BETA-BREMSSTRAHLUNG SPECTROMETER
FOR GEMINI XII

Contract No. NAS9-5765
Final Report

0-71000/7R-1

March, 1967

Prepared by: B. J. Farmer
B. J. Farmer
Senior Scientist

N. E. Chappell
N. E. Chappell
Research Scientist

R. G. Bagwell
R. G. Bagwell
Research Associate

W. J. Rainwater
W. J. Rainwater
Research Scientist

Approved by: J. H. Johnson
J. H. Johnson
Manager-Nuclear Sciences

H. B. Gibbons
H. B. Gibbons
Director

TABLE OF CONTENTS

TABLE OF CONTENTS (continued)

INTRODUCTION

Throughout the Gemini program a number of radiation monitoring devices have been employed both inside and outside the spacecraft to measure radiation exposure to the astronauts. These have been both active and passive devices, sensitive to a variety of radiations expected in near earth orbit. In general it has been the object of these devices to determine the spectra of radiations outside the spacecraft and the physical dose due to those radiations inside the spacecraft. However, on Gemini X a bremsstrahlung spectrometer was mounted inside the cabin to better define the radiations inside the craft, and as a result of electron penetration data on the Gemini hatch, a combination beta-bremsstrahlung spectrometer was flown inside the vehicle on Gemini XII. It is this latter device that will be described in detail in this report.

Data relating to electron penetration through the Gemini III hatch was obtained early in 1966 at the LTV Research Center using a Van de Graaff particle accelerator. This data indicated that electrons with energies above 1.0 MeV lost only about 0.7 MeV in the hatch and entered the spacecraft with their remaining degraded energy. It became important to determine the relative intensities of electrons and x-rays inside the spacecraft. Since LTV, under Contract NAS9-4013,provided a device to NASA for evaluation, which was capable of measuring both electrons and x-rays in a single instrument, it was decided to place that device inside Gemini XII. The flight instrument utilized an original principle devised by LTV scientists for separating and analyzing electrons and x-rays (a patent has been applied for covering this apparatus) and only those design changes necessary to conform to the physical, interfacial, and environmental requirements of flight were made. The unit was designed to operate with a NASA modified data processor unit of the type flown with the bremsstrahlung experiment on Gemini X. The major design difficulties in the program were encountered in mating the LTV unit with the data processor. The fabrication, calibration, and calibration data reduction efforts in this program were carried out under National Aeronautics and Space Administration Manned Spacecraft Center contract NAS9-5765.

The Beta-Bremsstrahlung unit, serial number 3, was successfully flown on

Gemini XII November 11-15, 1966. Data was received as planned during the flight and post flight calibration of the instrument demonstrated that the function of the unit and its data processor was identical to that prior to launch. Data was not available in a form suitable for analysis at the time of publication of this report.

THEORY OF OPERATION

GENERAL

The LTV Beta-Bremsstrahlung spectrometer sensor unit is a scintillation device which was designed to analyze electron and bremsstrahlung radiations in the region from approximately 0.2 to 4.0 MeV. It combines the application of a complex scintillation crystal assembly with high speed electronic circuitry to identify and separate the two radiations when the device is used in a mixed field.

PARTICLE DETECTION PROCESSES

The basic principle of a scintillation counter employs the fact that the interaction of radiation with various materials produces excitation or ionization which is followed by the emission of light. This light is converted, usually by a photomultiplier tube, into an electronic signal. Different materials have different phosphorescent decay times which vary over several orders of magnitude. Particle identification was made possible in the Beta-Bremsstrahlung spectrometer by the use of two such materials in the configuration shown in Drawing N100-10001. The plastic scintillation material has a decay time of approximately 3 nanoseconds while that of the thallium activated cesium-iodide is 1.1 microseconds. Since electrons can enter only through the collimator shown in the drawing they must pass through the thin plastic crystal before entering the CsI. On the other hand, a gamma ray may enter from any direction and those passing through the plastic have a very low interaction probability in the material. Typical pulse shapes for electrons and gammas are shown in Fig. 1 for the curves labeled "Anode". The fast negative spike in the upper figure resulted from the electron interaction with the plastic and the remainder of the trace corresponds to energy lost in the CsI. No spike is seen for gammas in the lower figure because they interact only with the CsI. It is true, however, that some gamma interactions can occur in the plastic, plus the fact that a small number of the electrons which are produced by interactions in the CsI can escape and traverse the plastic. Due to the relative volumes of the two scintillators and the dependence of atomic number of interaction probabilities, the chance of particle confusion from this mechanism is small. To allow particle separation the pulse from the photomultiplier anode was shaped with a shorted delay line giving the resultant signals shown in Fig. 1. The difference in these resultant signals for gammas and betas is seen to be the presence of the positive spike produced by the betas. These types of signals were amplified, as will be described below, and utilized for particle identification in the Beta-Bremsstrahlung spectrometer.

ELECTRONICS

A general explanation of the operation of the electronics may be made by referring to Drawing N100-10900 which indicates in block form the relative association of the individual electronic circuits. The linear signal, originating at the last dynode of the photomultiplier tube, pin 7, was amplified by the linear amplifier, circuit A9. From there the signal went directly to P1 for interconnection to the analyzer-processor.

The particle identification signal originated at the anode of the photomultiplier tube and was shaped by the delay line before it entered the high speed amplifier, circuit A1. The amplified signal then went to the upper level detector, ULD, and the lower level detector, LLD, circuits A2 and A3 respectively. The outputs of these circuits then went to the logic circuit, A4, where the particle identification signals, gamma inhibit and beta enable, were produced. The particle identification signals went directly to P1 for interconnection to the analyzer-processor.

Monitoring of all the spectrometer output signals was possible through interconnections provided at P2, the AGE test connector.

A detailed discussion of the operation of these circuits plus the power supply and control circuits is given in the following paragraphs.

ELECTRICAL DESIGN

GENERAL DESIGN SPECIFICATIONS

The spectrometer was required to operate within the following final design specifications over a temperature range of 0° to 120° Fahrenheit from a filtered but unregulated power source of 26 ± 4 volts. The linear signal was required to have nominal rise and fall time constants of 1.2 µs and 3 µs respectively, and a dynamic range of 7 volts. It was required to have a sensitivity of approximately 1.6 volts/MeV with a stability of ±7% over the range of temperature and input voltage. The gating outputs required a rise and fall time of approximately 1 µs when loaded with the analyzer-processor and a width of approximately 8 µs. The amplitudes required for the logic levels were 4.5 ± 0.5 volts for the inhibited condition and 0.2 ± 0.2 volts for the uninhibited condition. These parameters were attained over the entire environmental conditions as evidenced by the successful completion of the qualification testing at NASA-MSC.

PHOTOMULTIPLIER CIRCUIT (N100-10900)

The photomultiplier circuitry consisted of an RCA-4460 photomultiplier, a Pulse Engineering Corp. PE5400 photomultiplier power supply, a shorted delay line, and the necessary circuitry to set and stabilize the required phototube gain. The linear signal was derived from the last dynode current, across the effective dynode capacitance to ground. The high speed signal was derived from the anode current driving the delay line and high speed amplifier. In order to minimize effects of photocathode noise, the "Co-netic" magnetic shield surrounding the photomultiplier was elevated to photocathode potential through a high impedance filter network.

The RCA-4460 was picked due to its small size, ruggedness, and similarity to tubes used in the past in laboratory applications. The PE 5400 power supply was utilized because of its past history as reliable space hardware. The PE 5400 was designed to operate directly drom a 26 ± 4 volt power supply and was compatible with the sensor unit power specifications. Additional filtering was required on some of the power supply outputs and was accomplished by the addition of external capacitors.

The output voltage of the power supply, which directly determined the gain of the photomultiplier, was controlled by the network attached to pins 1 and 2 of the PE 5400 power supply. Feedback through R5 and CR1 provided the voltage control feedback from the high voltage circuit. Due to the highly unstable and non-linear gain characteristic of phototubes with temperature, it was necessary to generate an external temperature sensitive signal which would vary the high voltage applied to the phototube in a manner that would compensate for gain shifts in the photomultiplier. For example, if the voltages on the phototube were held constant, gain change of approximately 300% over the temperature range of 0°F to 120°F would result. For compensation, a correction current was fed into the feedback summing junction of the PE 5400 power supply, Pin 1, which, along with the voltage feedback network, would keep the system gain constant. A network was then designed to create a temperature correlated current which closely matched that necessary for constant system gain. Since the temperature sensitive element and the phototube did not have precise absolute values at a given temperature, it was necessary to select the network resistance values for each individual sensor unit. High stability resistors were utilized to assure that the network retained its characteristics throughout its life and expected environment. The characteristics of the phototube and the correction network were such that rather simple selection techniques were developed which stabilized the system to within the design limits, ± 5%. A series of adjustments were made at room temperature and the temperature extremes. Values of the various components were then picked which would give the best temperature compensation within the design limits.

The characteristic shape of the linear pulse was determined solely by the impedance seen by the last dynode. The pulse amplitude was primarily a function of the capacitance from the last dynode to ground, which consisted of C2 (N100-13900), about 30 pf of cable capacitance, and a few pf of stray capacitance. This gave a total capacitance of approximately 220 pf. The decay time of the pulse was determined by the above capacitance shunted by the effective discharge resistance across it. This consisted of R3 (N100-10900) in parallel with the input impedance of the linear amplifier. This gave a decay time constant of about 8 μs. The rise time of the pulse was approximately

1.2 μs, which was the combination of the 1.1 μs CsI light decay constant and the 5 μs RC decay constant.

The high speed pulse, used for particle identification, was derived from the anode current. This current drives simultaneously a shorted delay line and the high speed amplifier input. The characteristic pulse shapes, as seen at the amplifier input, are shown in Fig. 1. The pulse of interest, the positive spike resulting from a reflected beta interaction, had approximately a 3 ns rise time and a 10 ns decay time. It was preceeded by a negative pulse corresponding to the normal signal lasting for 10 ns which was twice the time of propagation of the delay line.

LINEAR AMPLIFIER (NHO-13900)

At the beginning of the program the output sensitivity requirement was 1.25 volts per MeV. In order to obtain this original sensitivity, the linear amplifier was designed with a maximum gain of 10.5, a dynamic range of 5.5 volts, and a decay constant of 5 μs. After the compatibility tests with the analyzer-processor, it was determined that proper operation required an output pulse with an 8 μs decay constant, a 7 volt dynamic range, and an output sensitivity of approximately 1.6 volts per MeV. In order to increase the input sensitivity of the amplifier and the decay time constant of the output, the amplifier gain had to be increased. This was accomplished by increasing the inverter gain by approximately a factor of 3. Since the dynamic range of the amplifier was sufficient, no change was required to meet the new dynamic range specifications. The actual output sensitivity was adjustable through the use of an adjustment potentiometer, R5.

The circuit utilized had very good linearity and stability and a low output impedance to minimize the effect of load impedance. The instability and non-linearity characteristics were within ± 0.6% of full scale over the temperature range of -10°F to 130°F and unmeasurable with the equipment utilized over the temperature range of -10°F to 110°F (see Figure 2). This was well within the design limits of ± 1% full scale maximum deviation of the best straight line. The output impedance of the amplifier was matched as closely as possible to the impedance of the interconnection cable used between the sensor and analyzer-processor by the series addition of 30 ohms, R12, in the circuitry. This was done to minimize reflection problems between the two units. The amplifier output was capacitively coupled to prevent damage if the output line were inadvertently shorted.

HIGH SPEED AMPLIFIER (N100-11900)

The high-speed amplifier was designed to amplify the positive output from the delay line network to such a level that amplitude detections could be performed on the pulses. The amplifier was designed with limited bandwidth to minimize accidental detection due to grass, time variant fluctions on the signal. The amplifier itself, had a gain of approximately 75 to 80. As it was designed to amplify the reflected pulse of the delay line output, which was positive, the amplifier had to be essentially insensitive to the large negative overload pulse that preceeded the positive pulse. Linearity of gain was not a requirement, but stability was. Limits of ± 5% gain stability over the range of -10°F to 130°F were required for proper operation. Less than ± 1.5% change over this range was achieved as seen in Fig. 3.

HIGH SPEED LEVEL DETECTORS (N100-12900)

There were two fast detectors utilized in the sensor unit, an upper level detector designated ULD, and a lower level detector designated LLD. In each detector, there was an amplifier which served as an isolation buffer and allowed for a final gain adjustment. The detectors and amplifiers were arranged as shown in Fig. 5. As seen in Fig. 4, the detector circuits were stable to within ±1%, when operated at approximately midrange on the adjustment potentiometer. It was desirable to operate the detectors near this point if possible, so a ratio was determined for the LLD and ULD, which was approximately 10. The gain of the A3 amplifier was then fixed to give this ratio of pulse amplitudes into the two detectors. The gain of the A2 amplifier was determined by the linear amplifier gain, phototube gain, and noise considerations. Of course, typical output levels were known prior to initial design. The particular tube type, crystal configuration, and physical and electrical configurations peculiar to this sensor design were used to determine the gain of the A2 amplifier. This was found to be approximately 5. With the gains determined for the high speed system and the linear amplifier, the gains of the individual spectrometers were adjusted by setting the phototube gains. The output of the LLD and ULD discriminator circuits were fed into a pulse shaping circuit to provide the logic pulses required by the logic circuitry (N100-13900). The actual levels at which the detectors were set were determined by calibration with radioactive sources.

LOGIC AND OUTPUT CIRCUITS (N100-13900)

The logic and output circuitry were designed to accept the LLL and ULL outputs, and generate gamma inhibit pulses and beta enable pulses compatible with the analyzer-processor. The logic was realized utilizing military-range RTL integrated circuits. The particular elements were picked to optimize the speed and power requirements of this device. In order to minimize the number of component types utilized in the spectrometer, the entire logic was designed around dual 3-input NAND/NOR gates. Three and one half devices, seven gates, were required to fulfill the logic requirements.

One device was used as a monostable multivibrator, a technique developed at LTV prior to the initial Beta-Bremsstrahlung sensor concept. As long as precise timing throughout the temperature range was not required, it provides the functions of a monostable multivibrator with a minimum of components. Another dual gate was used, utilizing the ULL and monostable multivibrator signals, to develop the signal which was used to generate inhibits on both control outputs. The other two devices used the two previously developed signals to generate the control functions for the analyzer-processor. The outputs of the control logic gates drove output transistors to provide compatible signals for the analyzer-processor. The circuit was designed to provide signals to the analyzer-processor of proper width and sufficient amplitude to initiate the inhibit functions necessary to perform the proper analysis of the linear signal. The control signals were modified, after mating compatibility tests were performed, to eliminate a noise coupling problem. The width was increased to approximately 9 μs and the rise and fall times were tailored to approximately 1 μs. The output circuitry was designed such that a continuous short circuit would produce no damage to the circuitry and would produce negligible effects on power consumption.

LOW VOLTAGE POWER SUPPLY (N100-14900)

The operating voltage requirements for the spectrometer circuits were

4 volts ±3% with ±2% regulation and 6.8 and 12 volts ± 8% with ±3% regulation over the entire range of temperature and input voltages. To obtain these requirements the 4 volts had to be within ±1% and the 6.8 and 12 volts within ±5% at standard conditions (26 V.D.C. input, 77°F, and operationally loaded). The ripple was not to exceed 50 millivolts.

In order to fulfill the preceeding requirements, a small relatively efficient unit had to be designed. Since the 4 volt output required the highest current,an efficient means of reducing the 26 volt input had to be used. The use of a resistance series regulator would have consumed much more than the 3 watts available. The use of a transformer DC to DC converter to lower the voltage would have required too much space and design time. A switching regulator was chosen because it offers a combination of efficient regulation, simplicity and compactness. Because the 6.8 volt and 12 volt output required much less current and less voltage accuracy, zener diode regulators were found to be adequate.

In order to visualize the operation of the switching regulator,refer to Fig. 6. The switch was simply a transistor cutting on and off when commanded by the driver transistor driven by a variable-duty-factor multivibrator. The filter was of the low pass, LC type with a diode to return current during the off portion of the cycle. This essentially supplies D.C. power with an output voltage equal to the input voltage times the ratio of the on time to the switching period. Then by varying the time the switching transistor was on to the time it was off the output voltage could be varied.

The multivibrator was an astable type that commences operation upon application of voltage. The pulse width was varied by the application of current to either of its transistor bases. The differential amplifier supplied differential gain of approximately 50, proportional to the difference in the output voltage and the reference. When the output tried to increase either by an increase in input voltage or decrease in the load, the duty factor decreased and the output voltage was pulled down to approach the required output voltage. The regulator then changed the pulse widths of the multivibrator such that the output remained constant regardless of input and output variations.

The switching regulator performance was typically regulated within ±1% over the entire voltage and temperature range with accurate setting of the output voltage by adjusting R2. Its efficiency was approximately 60%. The output was protected from an overvoltage of greater than 6.8 volts with no load attached by the 6.8 volt zener on the output. An LC filter at the input to the power supply isolated it and the sensor circuitry from input current spikes. The switching transistor was a high current and high voltage type so that initial capacitor charging transients on cut-on would not exceed the safe-operating area. A test involving application of 4000 cycles of a 28 volt step input caused no degradation of switching transistor performance. Output ripple was typically less than 10 millivolts at room temperature at 28 volts input. Temperature stability was achieved by a low-temperature-coefficient zener diode reference and a matched dual transistor in the differential amplifier. Switching frequency was approximately 20 KHz and the multivibrator would continue operation even if the output were shorted,thus,giving the output transistor about 5 seconds before it opened.

The 12 volt and 6.8 volt outputs were obtained across zener diodes. The regulation and efficiency obtained was not as good as with the series switching regulator but was adequate for the circuit requirements. The output of the 6.8 and 12 volt zeners could vary within ±5% at standard conditions and regulate within ±3% over the entire voltage and temperature range. Power loss in the resistor feeding the zeners was 1 watt maximum.

TESTING AND MONITORING

The sensor unit was provided with a test connector in order to perform tests on the unit under operating conditions. It had inputs for a linear signal, to check system linearity and analyzer-processor channel boundaries, and a high speed signal, to check the high speed circuitry and logic circuitry. All three sensor outputs could be monitored through this connector and there was a protected 4 volt power supply monitoring point. The power supply monitor had a series 1 Kohm resistor to protect the power supply and instrument from accidental shorting of this monitor point. To prevent RFI problems when the spectrometer was in use, a grounded shield cap was provided to cover the test connector. A temperature monitor was provided to the spacecraft connector to provide a signal which was a function of the sensor internal temperature.

PACKAGE DESIGN

DESIGN SPECIFICATIONS

To insure the success of the sensor unit in the environment of space and launch,the requirements of MAC 8433 for pressurized hardware were evoked except for humidity, rain, salt sea atmosphere, sand, dust, fungus and sinusoidal vibration as set out in the contract. Since the sensor was to be mounted on the command pilot's hatch which was rigged for explosive opening,a 150g shock test was imposed. The unit was to be less than 4.20 lbs in weight and measure 5.50 inches x 5 inches x 3 inches maximum. The unit also was to have rounded corners at edges near the astronauts in order to avoid possible damage to space-suits. The interior of the package was to be vacuum sealed to insure operation of high voltage circuitry by maintaining a dry nitrogen atmosphere inside the case on exposure to the vacuum of outerspace and the oxygen atmosphere of the capsule. All quality control of assembly was to conform to quality specification NPC-200-2 as modified by the contract.

EXTERNAL DESIGN

In order to satisfy the external requirements, a container of the shape shown on Drawing N100-00920 was designed. The mounting configuration consisted of a back plate which was machined as an integral part of the container itself. The mounting bracket hole pattern configuration is shown on Drawing N100-00930. Adequate strength in the mounting back plate and container was maintained to insure that the unit would remain intact on the spacecraft door if it were opened in an emergency.

INTERNAL DESIGN

The internal configuration of the package also used the back plate as the main structural member. All heavy members of the internal design were secured to the back plate or mounted as close to it as possible to reduce the torque produced at the mounting plane. Since the collimator and shielding for the photomultiplier tube constituted the majority of the weight in the package, they were mounted on the bottom plate close to the back plate and secured with a clamp to the back plate.

The major factors which influence the design of the detector head assembly (N100-10001-01) were the anticipated electron and bremsstrahlung intensities, the electron collimator and bremsstrahlung shield design, vacuum protection, and the mechanical shock and vibration environment during launch.

The crystal and collimator geometries were chosen to give, as nearly as possible, equal count rates in the electron and bremsstrahlung channels. Based on a brief experimental study of electron penetration through a Gemini hatch and NASA supplied space electron intensities it was determined that a CsI(Tl) scintillation crystal approximately 1/2-inch long and 3/4-inch diameter was optimum. If the maximum possible shielding, within weight limitations, were used, the calculations indicated that the count rates would remain within allowable limits even if the space craft were boosted into a higher orbit than the standard mission called for.

The electron collimator was then designed to have a maximum acceptance cone angle compatible with this crystal size. Tantalum was chosen for the collimator and shield material because of its high density, high strength, and machinability; thus, giving the maximum shielding to weight ratio and allowing the shield to be an integral part of the mechanical structure.

The collimator design also included an aluminum spacer between the tantalum apertures to reduce the scattering of electrons from the collimator walls. Each aperture was made thick enough to absorb electrons to approximately 6 MeV, the maximum energy which could introduce significant distortions into the pulse height spectra.

The photomultiplier was guarded against shock and vibration by the use of silicone rubber gaskets at each end of the tube assembly, one compressing against the scintillation crystal and the other against the base of the photomultiplier tube. Thermal expansion problems were eliminated in the detector head assembly by these shock absorbing gaskets.

The "Co-netic" shield (N100-10010-03) around the photomultiplier tube served a dual purpose: it shielded the tube against the earth's and local magnetic fields and, since it was maintained at the potential of the photocathode of the photomultiplier tube, it acted as an electrostatic shield to reduce field effect noise at the photocathode.

To insure continued operation in the vacuum of space during extra-vehicular activity the unit had to be sealed at cover removal points, input connectors, and collimator assembly. The vacuum seal at the cover removal points were formed by gaskets of silicon rubber compressed by the mating surfaces. The input connectors were hermetically sealed types and were sealed by "O" rings between connector bodies and case. To achieve a vacuum seal at the detector head the electron window (N100-10006-01) was machined as an integral part of the washer which pressed against the O-ring. This gave the window strength and did not require the bonding of a foil to the sealing washer.

The printed circuit boards were made accessible to adjustment and service. Since the high speed amplifier (N100-11000-01), level detectors (N100-12000-01) and linear amplifier and logic (N100-13000-01) were the main active boards and probably required the most adjustment, they were mounted as plug in boards and used miniature RF connectors where required. The boards were plugged into connectors at the bottom and were secured to the sides by vibration absorbing card slides. In addition to the slides, pressure was applied to both the top and bottom of boards by rubber pads to insure vibration isolation and adequate structural strength. This method of mounting reduced the possibility of board resonances.

The high voltage control board (N100-15000-01) and HV power supply were mounted on bases in the top section to allow access to the board with the cover removed. The harness wiring (N100-10300-01) to the photomultiplier tube and to the wiring below (N100-10200-01) was made of sufficient length to allow the board to be lifted out of case for maintenance and case removal. The low voltage power supply (N100-14000-01) was installed on bosses on the bottom cover and wired into the N100-10200-01 harness. To gain access to this power supply it was necessary to remove the bottom cover.

All boards were layed out on artwork per specification MSFC-STD-154. Components were mounted on the board with lead spacing to allow conformity to soldering specification NPC-200-4. The plug-in boards as well as the upper low voltage power supply board were made of .063 inch thickness glass epoxy board per Mil-P-13949. The lower low voltage power supply board and the high voltage power supply control board were made of .093 inch thickness glass epoxy board per the same specification. To insure added vibration strength and component protection a conformal coating of Scotchcast 8 was used and applied per Garland Division of LTV Electrosystems process specification 404-00060. Each of the three plug-in boards were rhodium plated in the connector area to reduce insertion wear. The unit was designed to be one complete operating package outside of the case and could be checked out for proper operation in this configuration.

The wiring between connectors and boards was accomplished per LTV Aerospace Missiles and Space Division fabrication specification 308-11-2. All wires were per Mil-W-16878 type E and cables per MIL-C-17. The wiring to the high voltage power supply from the photomultiplier tube used Mil-W-16878 type E wire covered by teflon tubing on wires exceeding 600V potential to prevent possible voltage breakdown of wires in harness. The entire top of the high voltage power supply was conformally coated to add strength and reduce possibility of high voltage breakdown.

ANALYSIS OF DATA

Calibration data was obtained for both the flight unit (S/N 3) and the back-up unit (S/N 2). The data reduction matrices were determined only for the flight unit, however, since the back-up unit was not required for flight. This section gives a discussion of the manner in which the calibration data was taken, the method by which it was reduced, and a suggested technique for the reduction of the actual space pulse height distributions.

DATA REDUCTION EQUATIONS

Because the exclusion of electrons from the bremsstrahlung channels (and vice versa) was not absolute it is impossible to make an analysis of one spectrum without a consideration of the other. A complete data reduction technique is discussed in this section which employs matrix algebra. The definition of the various matrices is given first, then the construction and solution of the equations, and, finally, the method by which each matrix was obtained. We should define at this point the relevant terms and matrices.

E = incident particle energy in MeV
E' = pulse height given in MeV
R_γ = normalized gamma resolution matrix
R_β = normalized beta resolution matrix
C_γ = normalized matrix of gamma cross-talk in the electron channels
C_β = normalized matrix of electron cross-talk in the gamma channels
ϵ_γ = gamma efficiency matrix
ϵ_β = beta efficiency matrix
f_γ = fraction of gamma cross-talk in the beta channels
f_β = fraction of beta cross-talk in the gamma channels
N_γ = gamma pulse height spectrum
N_β = beta pulse height spectrum
S_γ = true gamma spectrum
S_β = true beta spectrum

The equations relating these terms are as follows:

$$N_\gamma = R_\gamma \epsilon_\gamma S_\gamma + C_\beta \epsilon_\beta f_\beta S_\beta \qquad (1)$$

$$N_\beta = R_\beta \epsilon_\beta S_\beta + C_\gamma \epsilon_\gamma f_\gamma S_\gamma \qquad (2)$$

These represent a set of simultaneous, linear, matrix equations which may be solved in a manner similar to a set of simultaneous, linear, algebraic equations. Perhaps the simplest solution is by direct matrix inversion. We first write the set as a single matrix equation.

$$\begin{pmatrix} N_\gamma \\ N_\beta \end{pmatrix} = \begin{pmatrix} R_\gamma \epsilon_\gamma & C_\beta \epsilon_\beta f_\beta \\ C_\gamma \epsilon_\gamma f_\gamma & R_\beta \epsilon_\beta \end{pmatrix} \begin{pmatrix} S_\gamma \\ S_\beta \end{pmatrix} \qquad (3)$$

The solution of which is

$$\begin{pmatrix} S_\gamma \\ S_\beta \end{pmatrix} = \begin{pmatrix} R_\gamma \epsilon_\gamma & C_\beta \epsilon_\beta f_\beta \\ C_\gamma \epsilon_\gamma f_\gamma & R_\beta \epsilon_\beta \end{pmatrix}^{-1} \begin{pmatrix} N_\gamma \\ N_\beta \end{pmatrix} \qquad (4)$$

which for this case involves the inversion of one forty by forty matrix.

In the event it is impractical to invert a forty by forty matrix an alternate solution, which involves the inversion of several twenty by twenty matrices, may be obtained by the solution of Equations (1) and (2) using the elimination method. Care must be taken with this method when working with R_β and C_β, since each has at least one zero row. Either of these techniques should yield satisfactory results. The resulting functions for both electrons and bremsstrahlung will be the differential spectra in particles or photons per MeV per square centimeter per second at the detector.

EXPERIMENTAL DISTRIBUTIONS

In any data reduction technique, statistical fluctuations are amplified when one attempts to remove the effect of response functions from data. Further, data reduction is made more complex when unequal data acquisition channel widths are employed. The data anticipated from the beta-bremsstrahlung spectrometer will suffer from both these difficulties; however, a curve fitting technique may be employed to effect a solution. Let us denote C_i as the counts received during a given period of time T in channel i of width

W_i, then

$$N_i = \frac{C_i}{W_i T} \qquad (5)$$

denotes the integral of the pulse height spectrum over the i^{th} channel, or

$$N_i = \int_i N(V)\, dV \qquad (6)$$

where V is the voltage of the pulse. It then remains to determine an analytical expression for N(V).

Although, at the time of the preparation of this report, no actual data was available, the brief experimental investigation at LTV of electron penetration through a Gemini hatch and other electron penetration and bremsstrahlung studies at LTV have indicated that the shape of the pulse height distributions should be near exponential. If, in fact, the data demonstrates this characteristic a fitting function of the following form may be employed:

$$N(V) = e^{-(aV^2 + bV + c)} \qquad (7)$$

where

a, b, and c are constants. The function may then be written in the form

$$\ln N(V) = -(aV^2 + bV + c) \qquad (8)$$

A least squares fit may be used to determine the constants if the data points are weighted according to the statistical fluctuations. Since the fit is made to $\ln N_i$, the proper weighting function U_i may be shown to be

$$U_i = \left(C_i \ln \frac{C_i}{W_i T} \right)^{-1} \qquad (9)$$

Since the raw data is actually the integral of N(V) dV over the channel, the fit must first be made to the N_i's assuming they lie at the midpoint of the channels. Then a first correction may be obtained by integrating the function over each channel, subtracting the difference from the original N_i's and repeating the fit with the new N_i's until convergence occurs.

The resulting spectrum must be converted at this point to a pseudo-energy scale before being operated on by the matrix. This scale is defined in terms of the pulse height voltage of the center of photo-peak of gamma rays in the CsI(Tl) crystal. The absolute value of the conversion constant was determined using a thorium-226 gamma source in a manner described in the Final Calibration section at the end of this report. The conversion relationship was found to be

$$V = 1.53\,(\text{volts/Mev})E' \tag{10}$$

where we shall use E' as the pseudo-energy referring to pulse amplitude. If any variation in this conversion coefficient is found at post-flight calibration or because of temperature effects, it may be inserted into the program later. We may then write the final analytical pulse height spectrum as follows:

$$N(E') = e^{-(AE'^2 + BE' + C)} \tag{11}$$

where A, B, and C are the constants for the function in terms of E'.

This function must then be divided into twenty increments to match the resolution matrices discussed in the following sections. This involves integrating $N(E')dE'$ over each of the 200 keV intervals with the first beginning at 100 keV.

BETA RESPONSE MATRIX R_β

The response of the spectrometer was measured for eight electron energies between 0.4 and 2.5 MeV. The information obtained was used to determine not only the response matrix R_β but also the efficiency matrix ϵ_β, the normalized cross-talk response matrix C_β, and the cross-talk efficiency f_β. The determination of the last three matrices will be discussed later. The spectrometer was placed in an evacuated chamber at the end of the drift tube of the LTV Research Center's 3 MeV Van de Graaff Accelerator. The experimental arrangement is shown in Fig. 7. Approximately six feet in front of the spectrometer, the beam passed through a thin aluminum foil 0.0025 inches thick which scattered the beam and caused a homogeneous flux of electrons to fall on the spectrometer. The homogeneity of the flux was monitored, prior to the data taking, with a lithium ion drift (LID) solid state detector and was shown to be within the required ± 10% maximum deviations, in accordance with the Quality Control Bulletin (QCB-CP-001) "Calibration of the LTV Beta-Bremsstrahlung Spectrometer for Gemini-12". The same LID detector was then mounted on one side of the beam tube slightly in front of the spectrometer and was used as the beam flux and energy monitor. The LID detector was calibrated for electron energy using the internal conversion electrons from two sources: Cesium-137 at .625 MeV and bismuth-207 at .482 and .972 MeV. The accelerator electron energy was then determined from this calibration.

Response functions were measured at several incident angles; however, the deviations in the shape of the response functions were found to be so small, even near cut-off, that only one matrix was required. The functions were obtained at eight energies between 0.4 and 2.5 MeV by accumulating data directly from the linear output of the Beta-Bremsstrahlung spectrometer sensor unit in a 256 channel pulse height analyzer. The analyzer was gated by the sensor particle identification outputs so that the electrons were stored in one half of the memory and the actual bremsstrahlung plus the cross-talk in the other. Typical electron pulse height distributions are shown in Figs. 8 and 9.

To obtain the required distributions for the matrix it was necessary to interpolate between and extrapolate from these distributions. To do this most accurately the curves were normalized to the same peak position and integral and cross-plots were made at steps equal to 0.05 of the peak value. From these cross-plots new pulse height distributions were determined at 200 keV steps from 200 keV to 4.0 MeV. These spectra were integrated over 200 keV intervals beginning at 100 keV and ending at 4.1 MeV. These integrals plus the value from 0 to 100 keV were then normalized to one. The results are shown in the matrix for R_β given in Table 1.

BETA EFFICIENCY MATRIX ϵ_β

The electron efficiencies $\epsilon_\beta(\Theta)$ were measured as a function of incident electron angle θ and electron energy E. A typical curve at 2 MeV is shown in Fig. 10 and compared with the function calculated from pure geometrical considerations. The pulse height distributions were integrated over channel and the resulting number was corrected for analyzer dead time. The flux was determined by the count rate of the LID detector when corrected for the geometry of the collimator and for backscatter from the detector's silicon wafer. With this information the $\epsilon_\beta(\theta)$ functions were obtained as counts per electron per square centimeter. With this data, if angular distributions of electrons which penetrate the Gemini spacecraft walls are known, one may make an integration over θ to determine the actual flux of electrons at the collimator. However, electron scattering experiments (some of which were carried out at LTV) have indicated that the distribution is near isotropic. Using this assumption an electron efficiency function ϵ_β was obtained from the angular efficiency functions $\epsilon_\beta(\theta)$ follows:

$$\epsilon_\beta = \frac{\int_\Omega^{2\pi} \epsilon_\beta\,(\theta)\; d\;\Omega}{\int_\Omega \; d\Omega} \tag{12}$$

where Ω denotes the element of solid angle. This reduces to

$$\epsilon_\beta = \tfrac{1}{2}\int_0^{2\pi} \epsilon_\beta(\theta)\,\sin\theta\,d\theta \tag{13}$$

This integral was evaluated numerically to obtain ϵ_β which is a function of energy. This function is shown in Fig. 11 and is tabulated in Table 2 where the values represent the average values over the 200 keV increments. These values are then the elements of the diagonal matrix ϵ_β.

BETA CROSS-TALK RESPONSE MATRIX C_β

As mentioned above, the data to determine the amount of electron cross-talk received in the bremsstrahlung channels was taken during the electron response function measurements. The data received in the bremsstrahlung channels included not only cross-talk but also the actual electron-produced bremsstrahlung counts. The latter effect was determined by accumulating data with the detector at 90° to the beam and the proper amount was then removed from the false electron counts. In a manner identical to that discussed for the R_β matrix, the normalizations and cross-plots were made and the elements for the matrix C_β were determined. These are given in Table 3.

BETA CROSS-TALK EFFICIENCY MATRIX f_β

The magnitude of the cross-talk was determined relative to the number of electrons detected. After the removal of the bremsstrahlung background, the integrals of the cross-talk spectra were divided by those of the electron spectra. These values are plotted in Fig. 12. The average values of this curve over 200 keV increments are given in Table 4. These values form the elements of the diagonal matrix f_β

GAMMA RESPONSE MATRIX R_γ

The gamma response functions and efficiencies were measured for the Beta-Bremsstrahlung sensor using a series of accurately calibrated gamma ray sources, listed in Table 5. The spectrometer was mounted on a rotating mill table with a source located from 25 to 100 centimeters from the center of the crystal. Response functions for most of the sources were recorded at 26 orientations using a 256 channel pulse height analyzer. The values of the orientation indices Θ and Φ are defined by Fig. 13. The response functions for the sources are shown in Figs.14 through 19. For those sources with two or more lines, the responses from the lower lines were removed on the basis of a knowledge of the shape of the lower response functions. For example, the 511 keV line in sodium-22 was removed from the 1.28 MeV distribution by normalizing the 511 keV shape to the 662 keV distribution of Cesium-137 and subtracting the resulting shape from the total spectrum. The data taken in this manner at the various angles showed that the shape of the distributions was independent of angle. This allowed the use of only one response matrix at all angles. The set of pulse height distributions were then normalized to the same integral and photo-peak position. Finally, in a manner identical to that used for the electron response matrix, the gamma response matrix R_γ was obtained and is given in Table 6.

GAMMA EFFICIENCY MATRIX ϵ_γ

The efficiency function for gamma rays ϵ_γ was more complex in construction than that for electrons, since the efficiency varies with angle and the bremsstrahlung intensity is not expected to be isotropic over all angles. The values of the angular efficiency function $\epsilon_\gamma(\theta\ \phi)$ were obtained at $\theta = 0$ and 180°, plus several representative directions at $\theta = 45^\circ$, 90°, and 135°, for most of the calibration sources by first integrating over the pulse height spectra and correcting for analyzer dead time. These spectra were obtained as discussed in the R_γ section. The values at the remaining angles were obtained by simply scaling the pulse height distributions above a certain discriminator level and comparing these values with those taken at the representative angles. The flux was then calculated at the crystal for each source, based on the geometry and source strength given in Table 5. This gave $\epsilon_\gamma(\theta\ \phi)$ in counts per gamma per square centimeter.

The calibration of the sources was determined at LTV as a part of this contract using a sodium-iodide, anticoincidence spectrometer which has been used several years for making absolute bremsstrahlung measurements under contract for NASA-Headquarters. A new calibration of the spectrometer was made for this work using a series of low level calibration sources with a quoted accuracy of ± 2%. These sources were obtained from the Amersham Corporation in England.

For reference the curves for $\epsilon_\gamma(0^\circ,0^\circ)$ and $\epsilon_\gamma(90^\circ,0^\circ)$ are shown in Fig. 20. The average values over 200 keV increments for these $\epsilon_\gamma(\theta\ \phi)$ plus those for $\epsilon_\gamma(180^\circ,0^\circ)$ are given in Table 7. For all angles, except at $\theta = 0^\circ$ and 180°, the shape of the $\epsilon_\gamma(\theta,\phi)$ functions were identical. It was, thus, possible to obtain these functions from $\epsilon_\gamma(90^\circ,0^\circ)$ by a simple multiplication as indicated by the following equation:

$$\epsilon_\gamma(\theta\ \phi) = N_{\theta\phi}\ \epsilon_\gamma(90^\circ,0^\circ)$$

The values of $N_{\theta\phi}$ are given in Table 8. The equation relating the functions to an overall gamma efficiency matrix ϵ_γ may be written as follows:

$$\epsilon_\gamma = \frac{1}{26} \sum_{\theta\phi} \epsilon_\gamma(\theta,\phi),$$

where we have ascribed equal area weighting to the $\epsilon_\gamma(\theta\ \phi)$ functions, since they are very evenly distributed around the crystal. $P_{\theta\phi}$ is a function which describes the probability of receiving radiation from the direction $\theta\phi$. The $P_{\theta\phi}$ functions must be normalized, i.e.,

$$\sum_{\theta\phi} P_{\theta\phi} = I$$

where I is the identity matrix. The values of the $P_{\theta\phi}$ may be determined approximately by a consideration of the spacecraft material composition and configuration. One first estimates a source function over the area covered by each $\varepsilon_{\gamma}(\theta\ \phi)$. Then this is attenuated by the average mass per unit area of the spacecraft betwen the source and detector. The resulting spectra are then normalized to give the $P_{\theta\phi}$ values. The derivation of the $P_{\theta\phi}$ functions were not a part of this program; however, the information required for their determination should be available at NASA-MSC. To make a rapid but less accurate calculation of the intensity one may assume an isotropic source and attenuation function and insert the constants.

GAMMA CROSS-TALK RESPONSE MATRIX C_{γ}

The information required to determine the pulse height distributions of false gamma counts received in the electron channels was obtained simultaneously with response function data for the gamma response matrix. Since no background removal was required, the spectra were plotted and a smooth curve was drawn through the data to remove statistical fluctuations. In a manner identical to that used for the determination of R_{β}, the curves were normalized, cross-plots were made and the matrix elements calculated by averaging over 200 keV intervals. The matrix for C_{γ} is given in Table 9.

GAMMA CROSS-TALK EFFICIENCY MATRIX f_{γ}

The magnitude of the cross-talk was determined relative to the number of photons detected. The integrals of the cross-talk spectra were divided by those of the gamma pulse height spectra. These values are plotted in Fig. 21. The average values of this curve over 200 keV increments, which form the elements of the diamond matrix f_{γ}, are given in Table 10.

TEST SPECTRA

In order to demonstrate the effectiveness of the analysis technique described above for converting pulse height information into energy spectra, two known spectral distributions of electrons and bremsstrahlung were measured with the LTV Beta-Bremsstrahlung spectrometer and comparisons were made between the known values and those obtained from the spectrometer. Since the computer program for performing the analysis of data was not included under this contracted effort, the comparison of test spectra to measured spectra was made indirectly. This was done analytically by distorting the known spectra with the measured response and efficiency functions of the spectrometer and plotting the resulting curves on a graph with the measured spectra. The following paragraphs detail this procedure.

Beta Spectrum

The beta spectra from a thin source of Sr^{90} - Y^{90} were measured with the Beta-Bremsstrahlung spectrometer. The results of this measurement are shown in Fig. 22. The spectra from the same source were measured with a large anthracene crystal type spectrometer. The object of this measurement was to obtain as closely as possible the true shape of the Sr^{90} - Y^{90} spectra. By using an anthracene crystal the amount of electron backscatter was minimized and this spectrometer's response was practically all Gaussian. Thus, the anthracene measured Sr^{90} - Y^{90} spectra had little distortion except that near the end point, which is due to the spectrometer's finite resolution. These "true" Sr^{90} - Y^{90} spectra were then multiplied by the electron efficiency diagonal matrix ϵ_β and the electron response matrix R_β. These results were compared with the shape of the measurement obtained with the Beta-Bremsstrahlung spectrometer. The comparison is shown in Fig. 22.

The relative magnitude of the two distributions shown was determined by a normalization of their total areas. The agreement is within the experimental uncertainties involved in the two determinations except in the last few energy lines. Here the "true" distorted or smeared distribution takes on progressively higher values than the beta-gamma measured distribution. This is expected though since the "true" smeared distribution also contained the anthracene spectrometer resolution. A correction for this effect, i.e., the removal of the resolution, would reduce the last bin by approximately 50% and the previous bins by progressively lesser amounts. This would bring these points in line with the agreement observed at the other points.

Bremsstrahlung Spectrum

The bremsstrahlung or x-ray spectrum resulting from a 2 MeV beam of electrons striking a thick aluminum target was measured with the Beta-Bremsstrahlung spectrometer. The angle of observation was 30° from the direction of the incident beam. The results of this measurement are shown in Fig. 23 . The true spectrum emitted under these conditions was previously measured in our laboratory utilizing a 2 inch by 6 inch NaI crystal and annulus arrangement which exhibited a high photopeak efficiency at 2 MeV. This true spectrum was multiplied by the photon efficiency diagonal matrix ϵ_γ and the photon response matrix R_γ. The result of these multiplications was compared with the spectrum measured with the Beta-Bremsstrahlung spectrometer. The comparison is shown in Fig. 23 and is on an absolute basis as indicated by the ordinate values. On the basis of the many experimental uncertainties which are involved in obtaining these absolute x-ray yields the agreement is well within the expected experimental error.

FINAL SYSTEM CALIBRATION

The final adjustment in calibration of the sensor unit was the exact setting of the output linear pulse amplitude relative to the photo-peak of a gamma ray pulse height distribution. The source used was thorium-226 which has a gamma energy of 2.615 MeV. A spectrum was taken, printed out, and plotted. The spectrum was then hand stripped to determine the proper channel for the 2.615 MeV peak. A pulser was then fed into the spectrometer test input and the amplitude adjusted until the output was in the channel corresponding to 2.615 MeV. The gain of the linear amplifier was then adjusted until the amplitude of a 2.615 MeV pulse was 4.00 volts giving a calibration of 1.53 volts per MeV.

With the outputs of the analyzer-processor connected to the NASA AGE, the channel boundaries were determined by adjusting the amplitude of a calibrated pulser until equal count rates were accumulated in adjacent channels. This pulser amplitude was determined relative to the thorium-226 calibration and provided the lower and upper channel boundaries. A list of channel boundaries and widths which were derived from the above tests are shown in Table 11. The boundaries are given in volts with a calibration basis of 4.00 volts for the 2.615 MeV thorium-226 gamma peak as determined above.

BETA PULSE

(RESULTING FROM AN INTERACTION
IN BOTH PHOSPHORS)

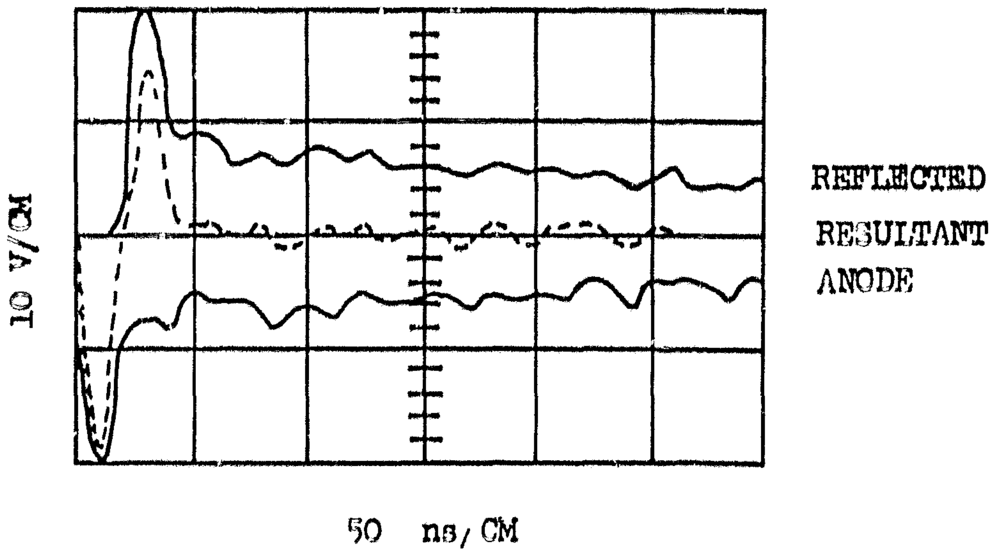

GAMMA PULSE

(RESULTING FROM AN INTERACTION
IN THE CsI(Tl) ONLY)

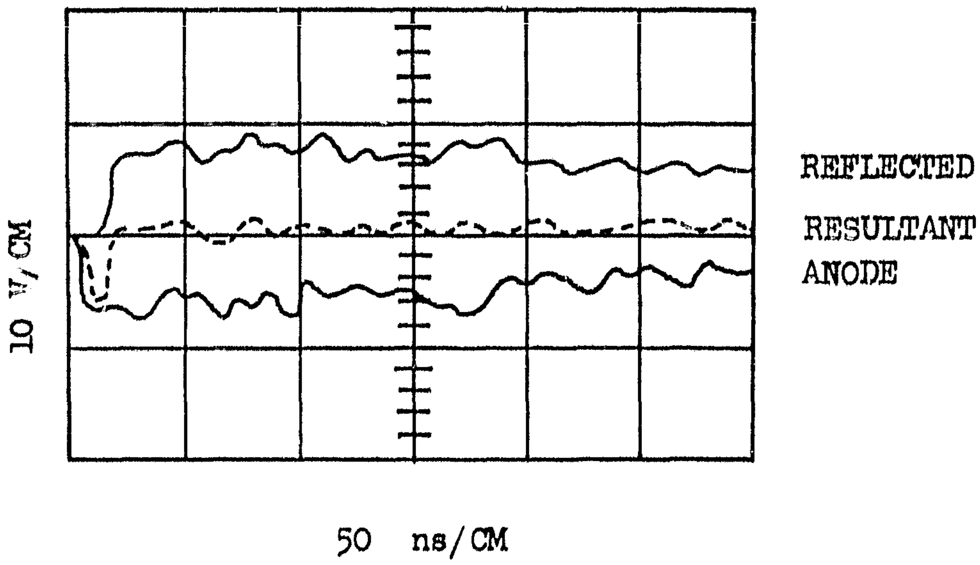

FIGURE 1 SIGNALS FROM CRYSTAL ASSEMBLY

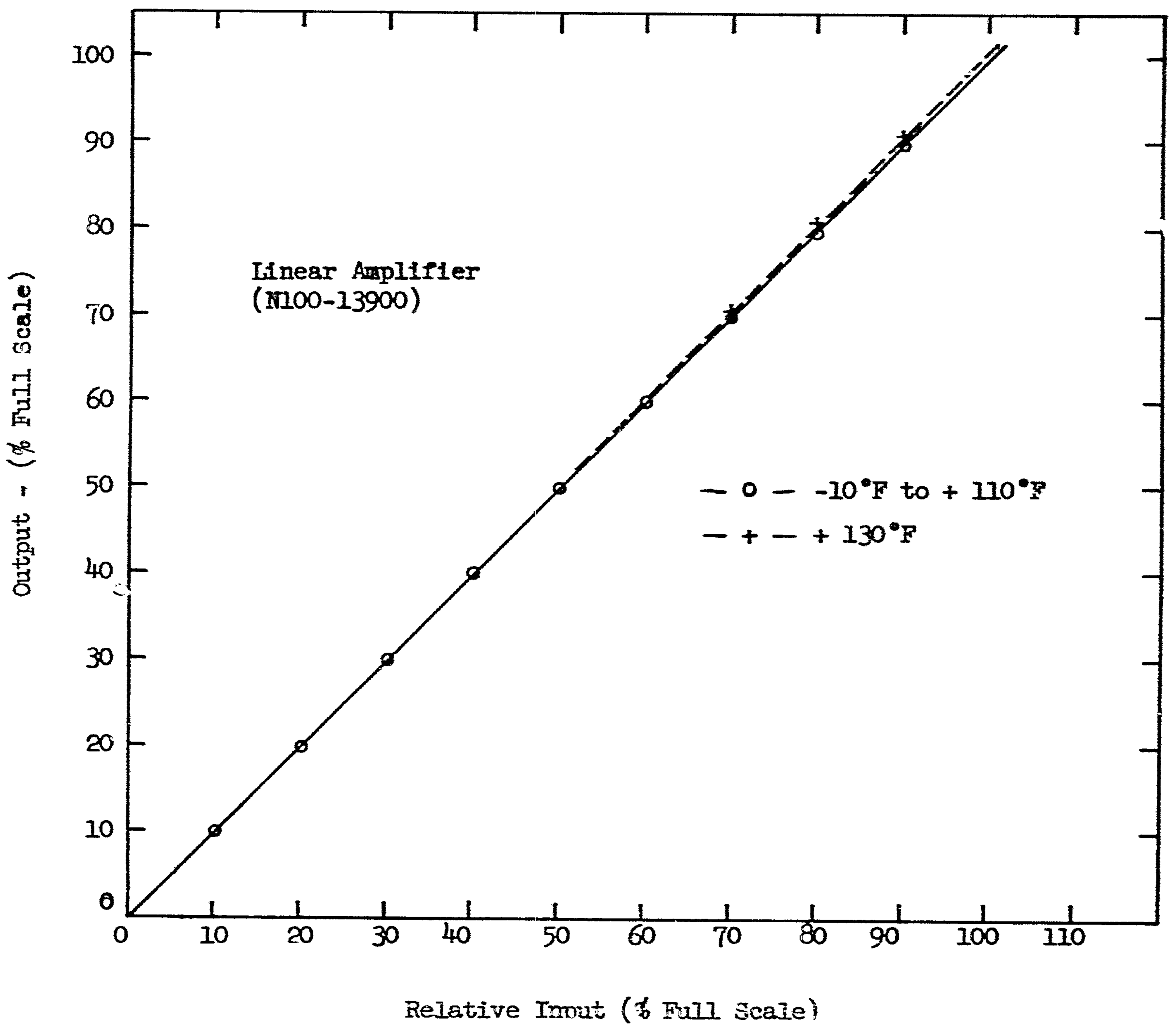

FIGURE 2 LINEAR AMPLIFIER GAIN - TEMPERATURE CHARACTERISTICS

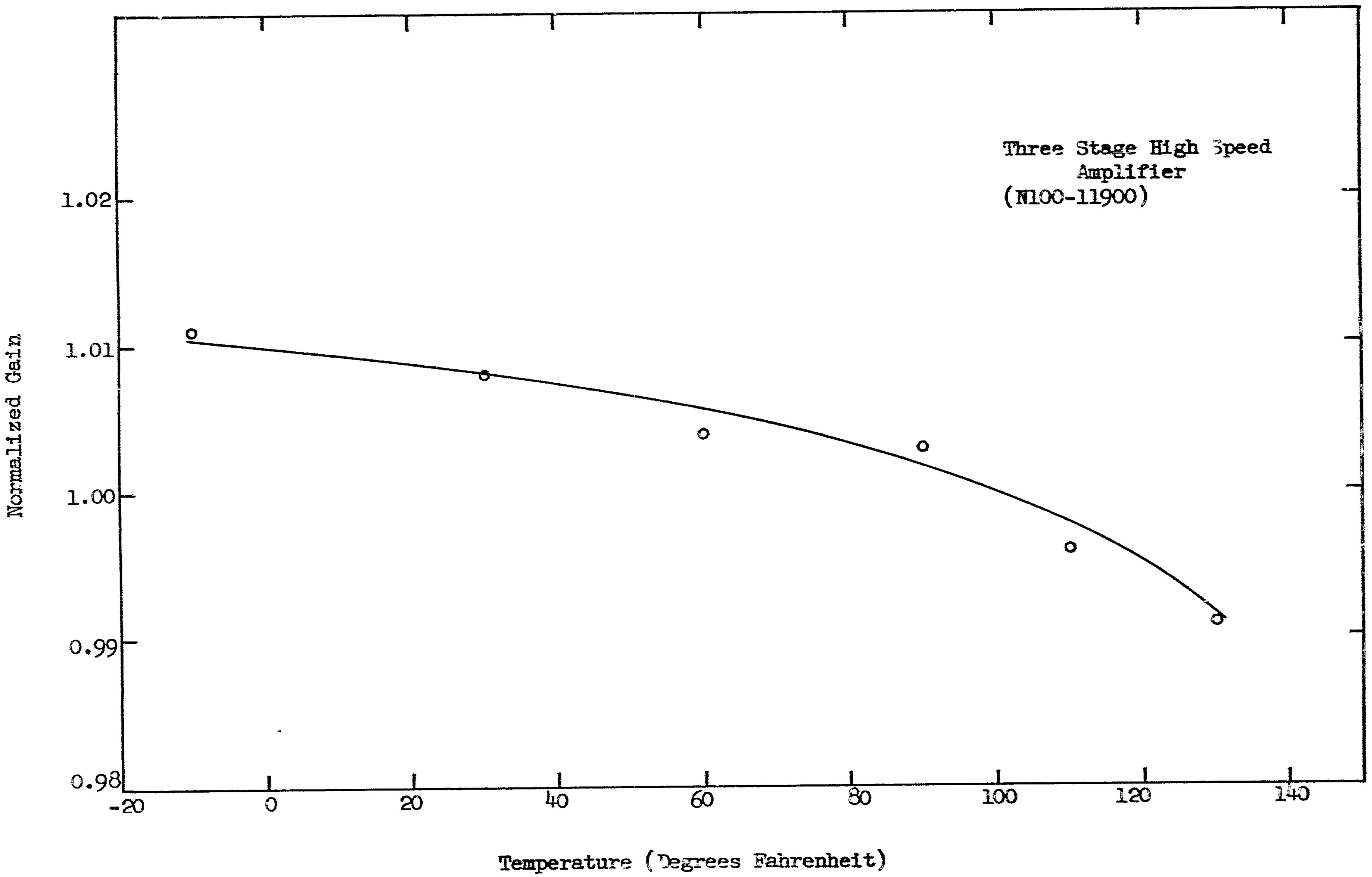

FIGURE 3 HIGH SPEED AMPLIFIER GAIN - TEMPERATURE CHARACTERISTICS

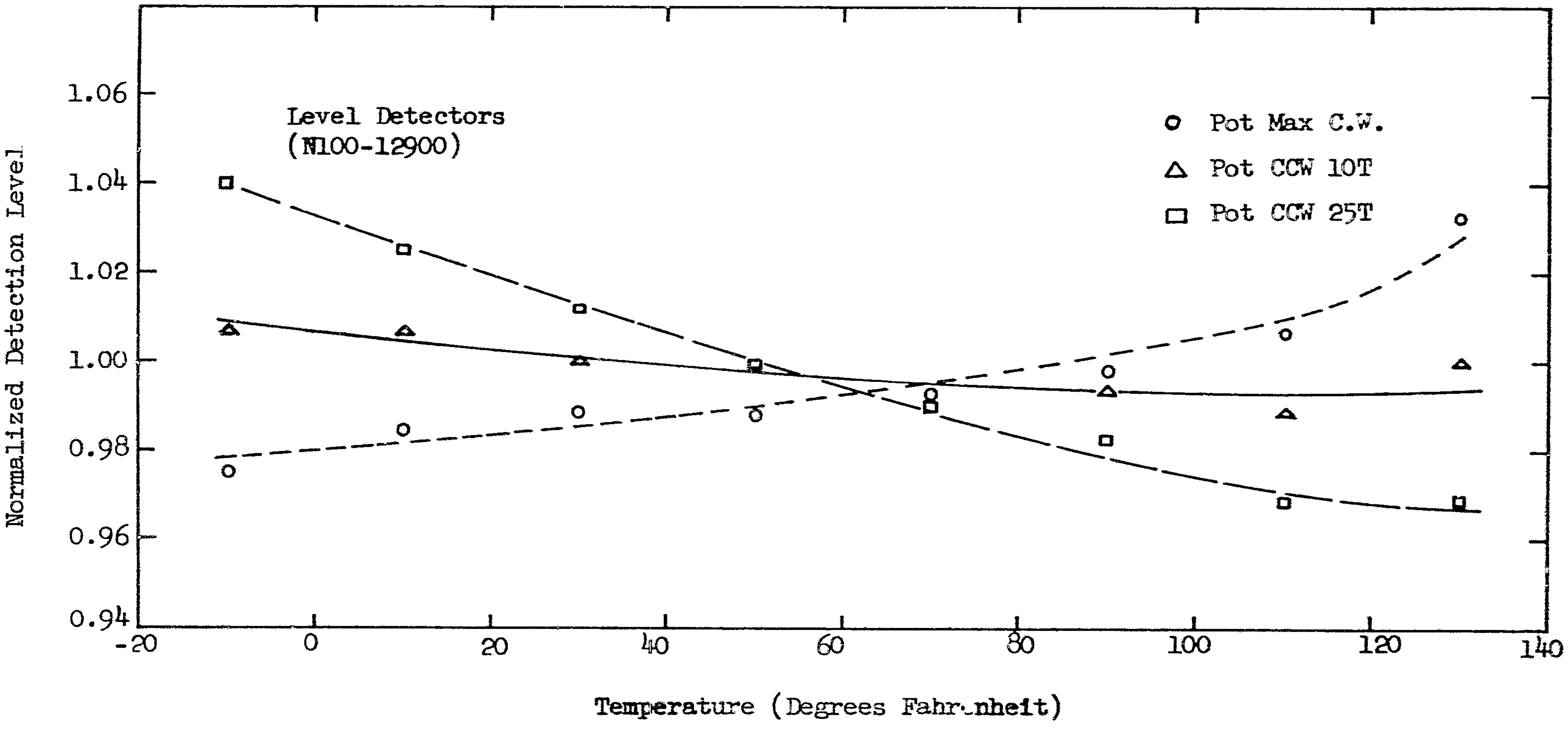

FIGURE 4 LEVEL DETECTOR TEMPERATURE CHARACTERISTICS

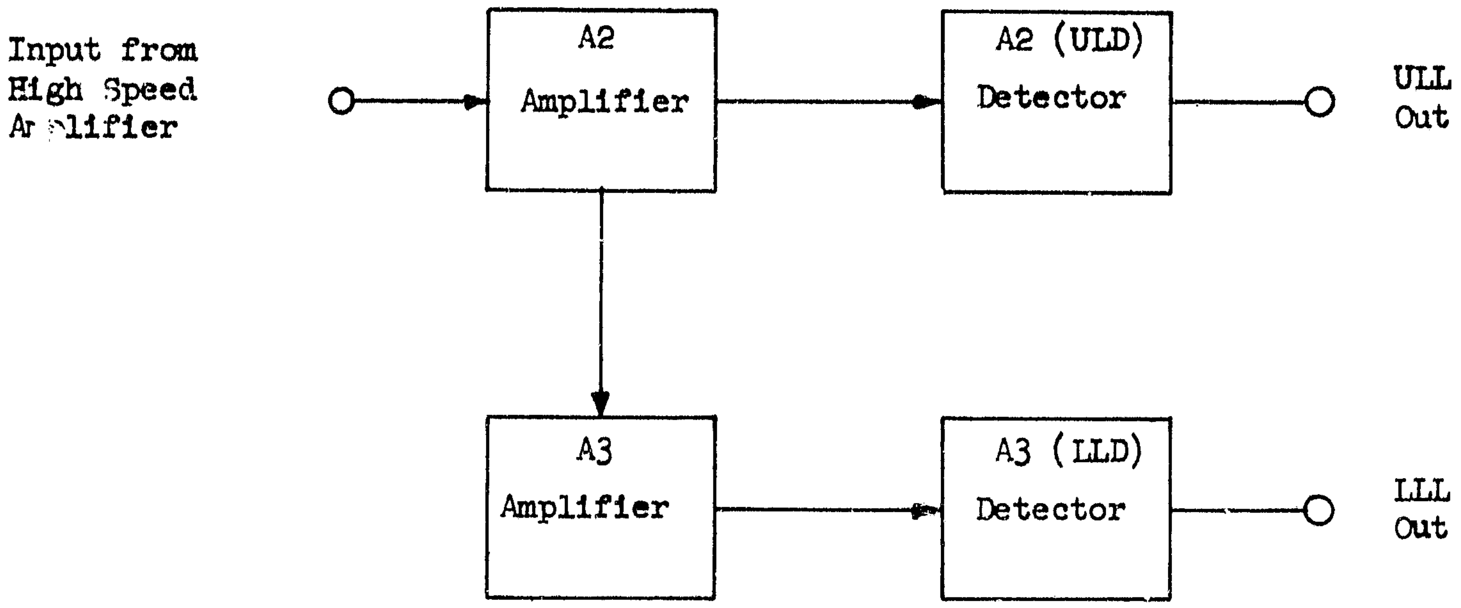

FIGURE 5 LEVEL DETECTOR BLOCK DIAGRAM

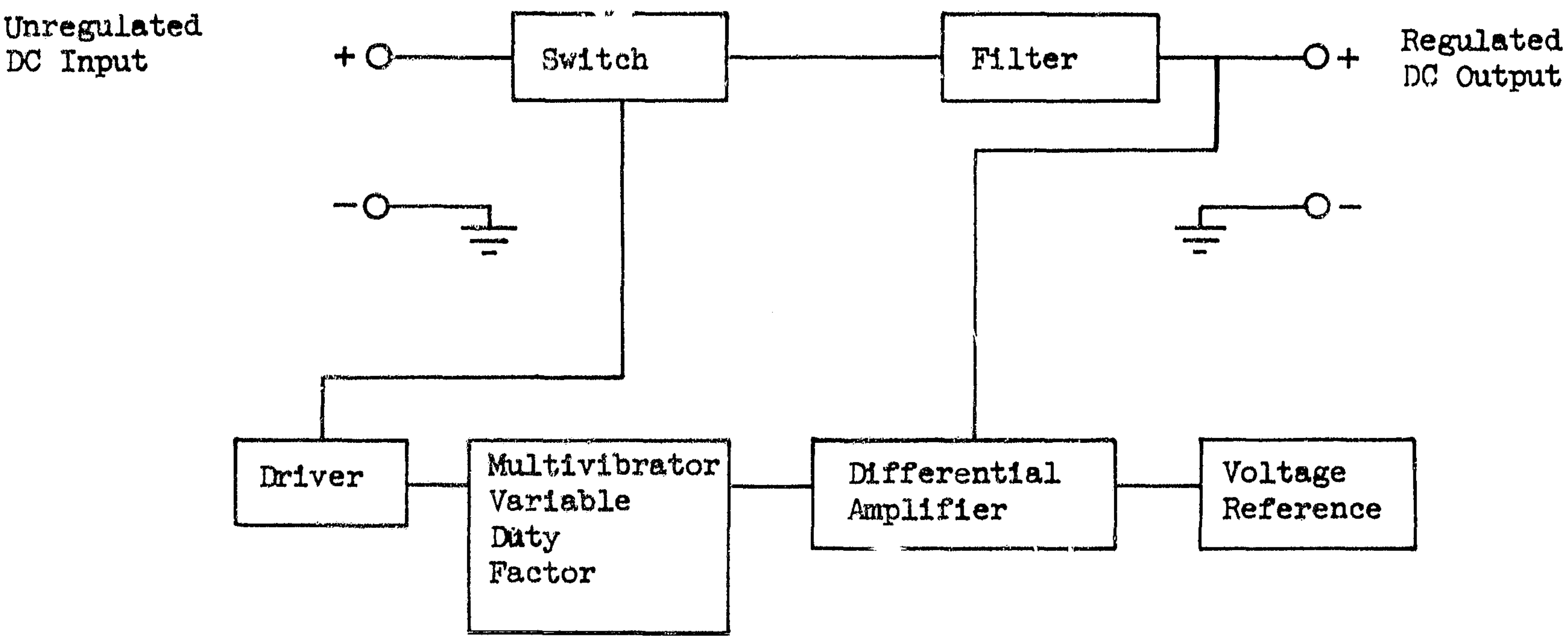

FIGURE 6 SWITCHING REGULATOR FUNCTIONAL DIAGRAM

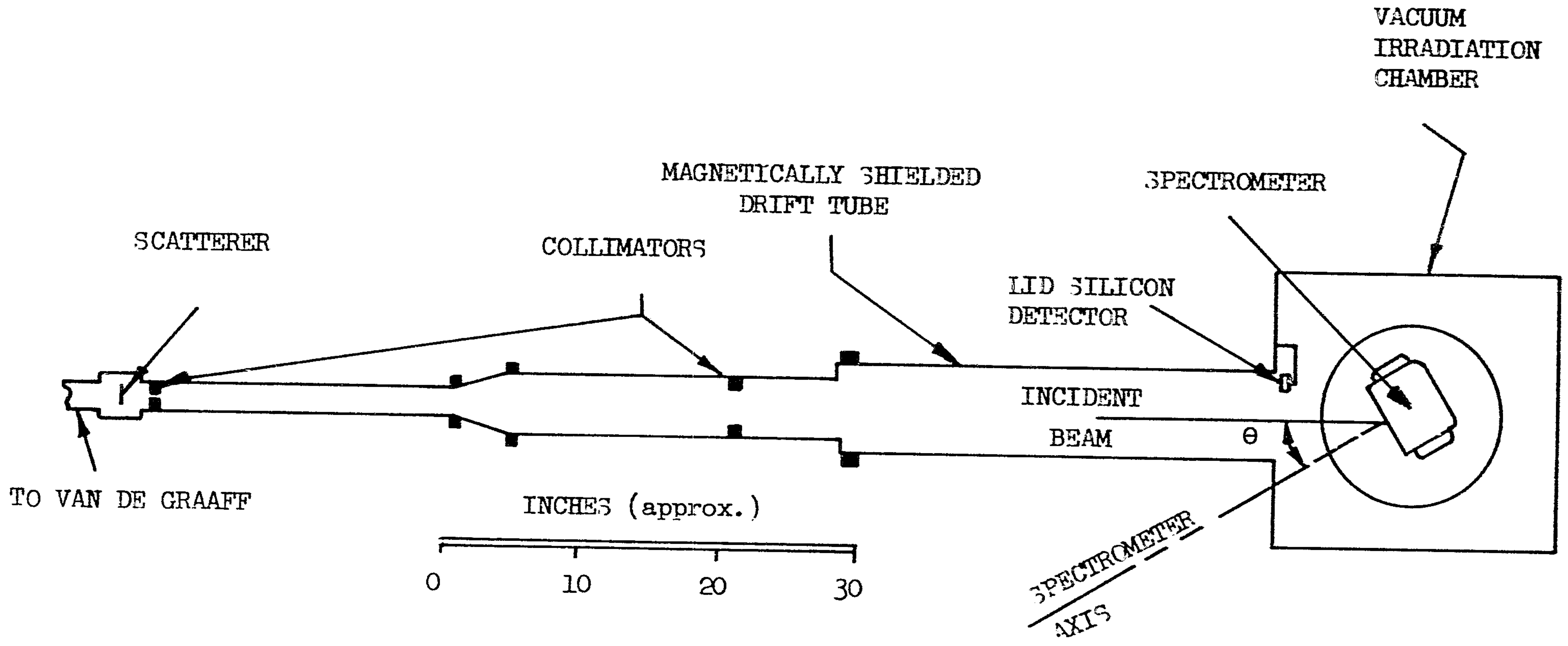

FIGURE 7 EXPERIMENTAL ARRANGEMENT FOR ELECTRON CALIBRATION

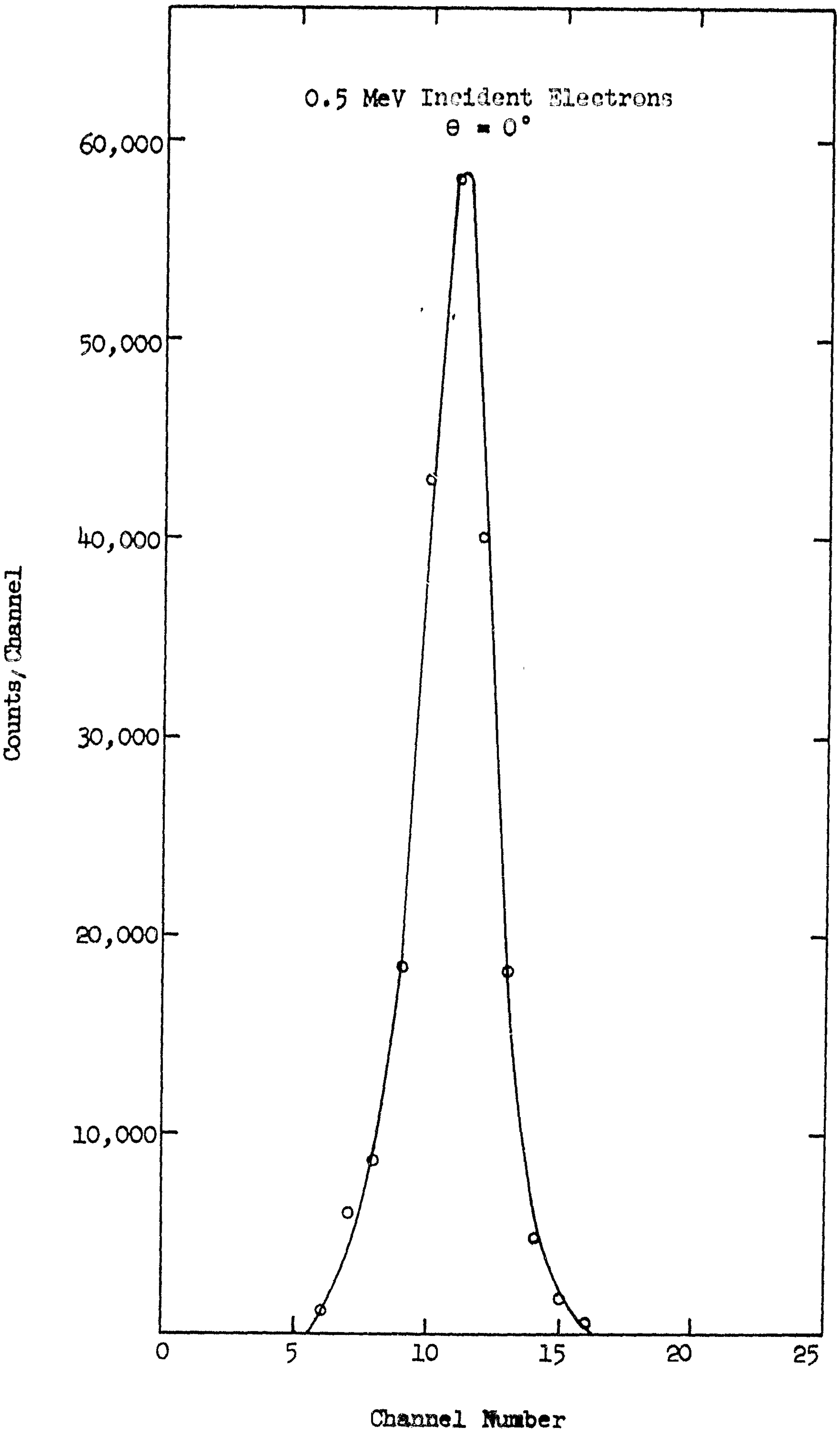

FIGURE 8 ELECTRON PULSE HEIGHT DISTRIBUTION

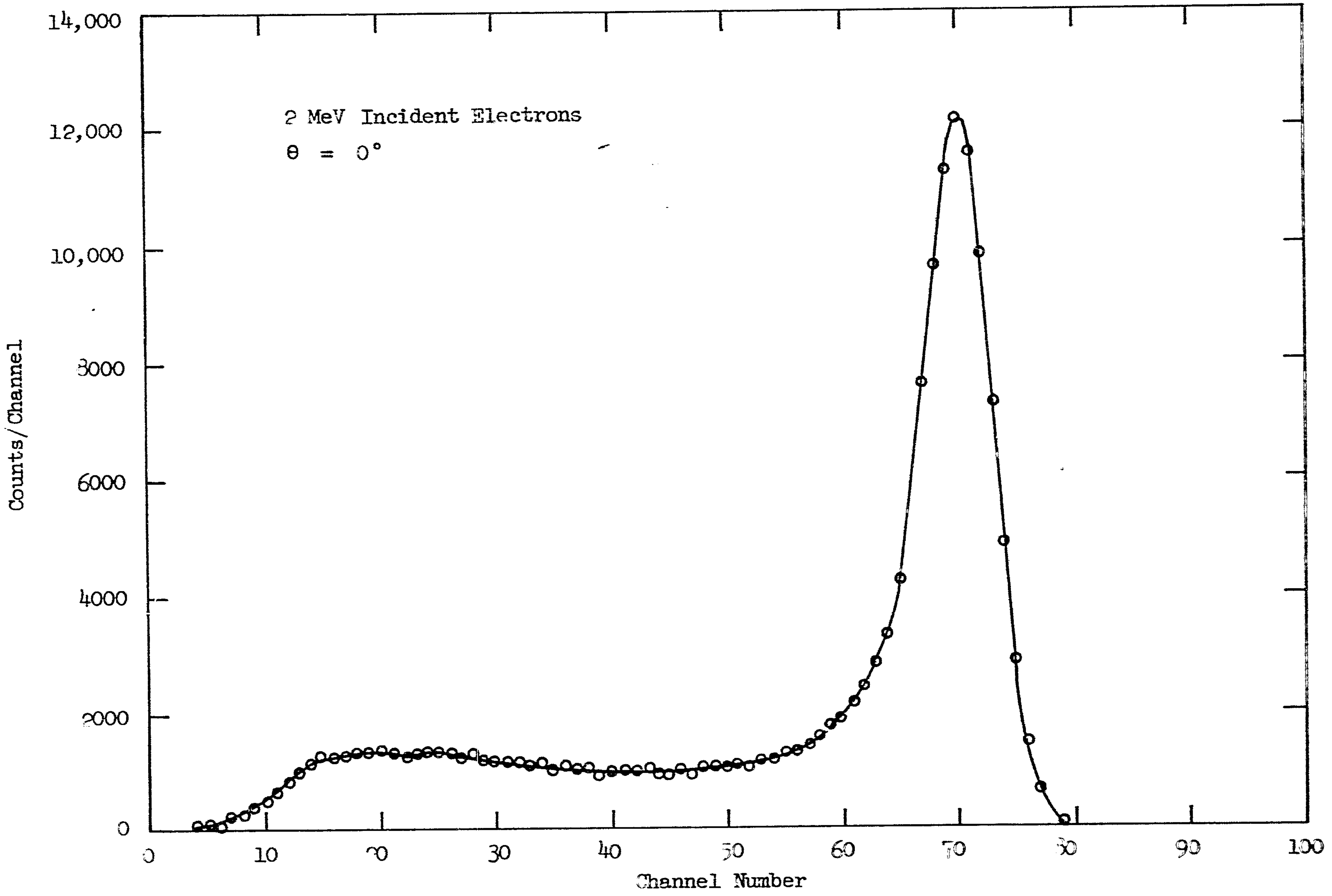

FIGURE 9 ELECTRON PULSE HEIGHT DISTRIBUTION

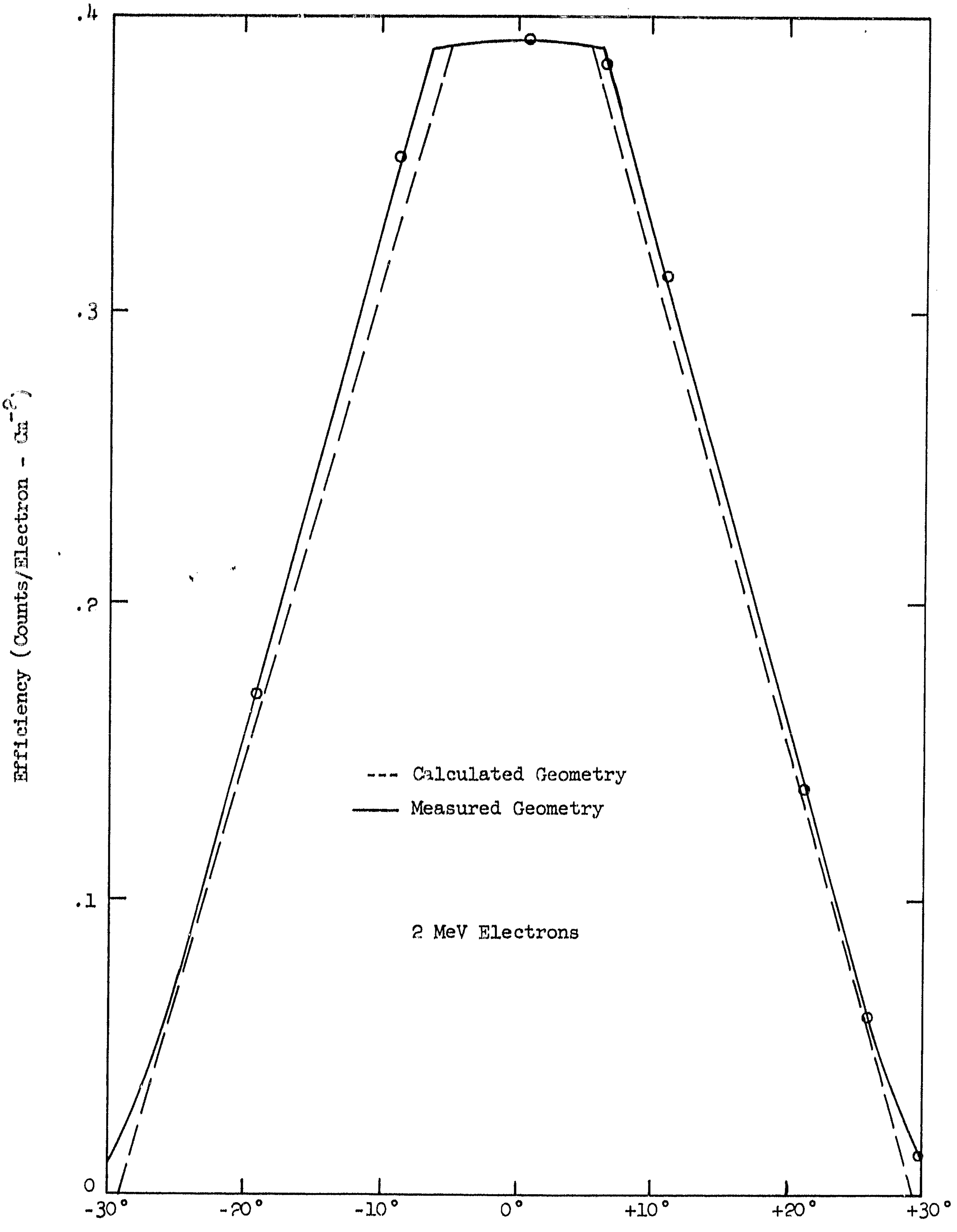

FIGURE 10 COLLIMATOR EFFICIENCY $\epsilon_{\beta}(\theta)$

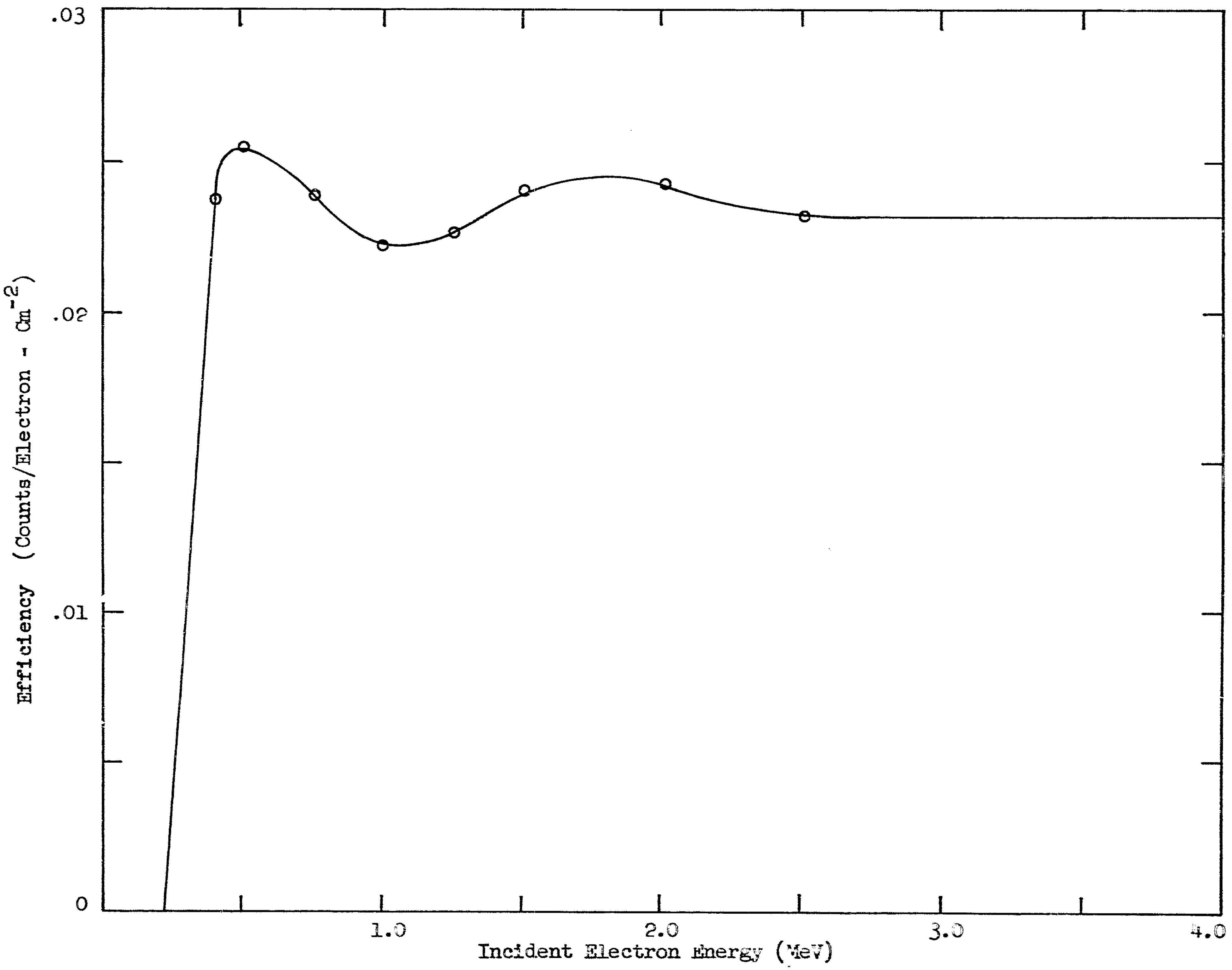

FIGURE 11 OMNIDIRECTIONAL ELECTRON EFFICIENCY ϵ_β

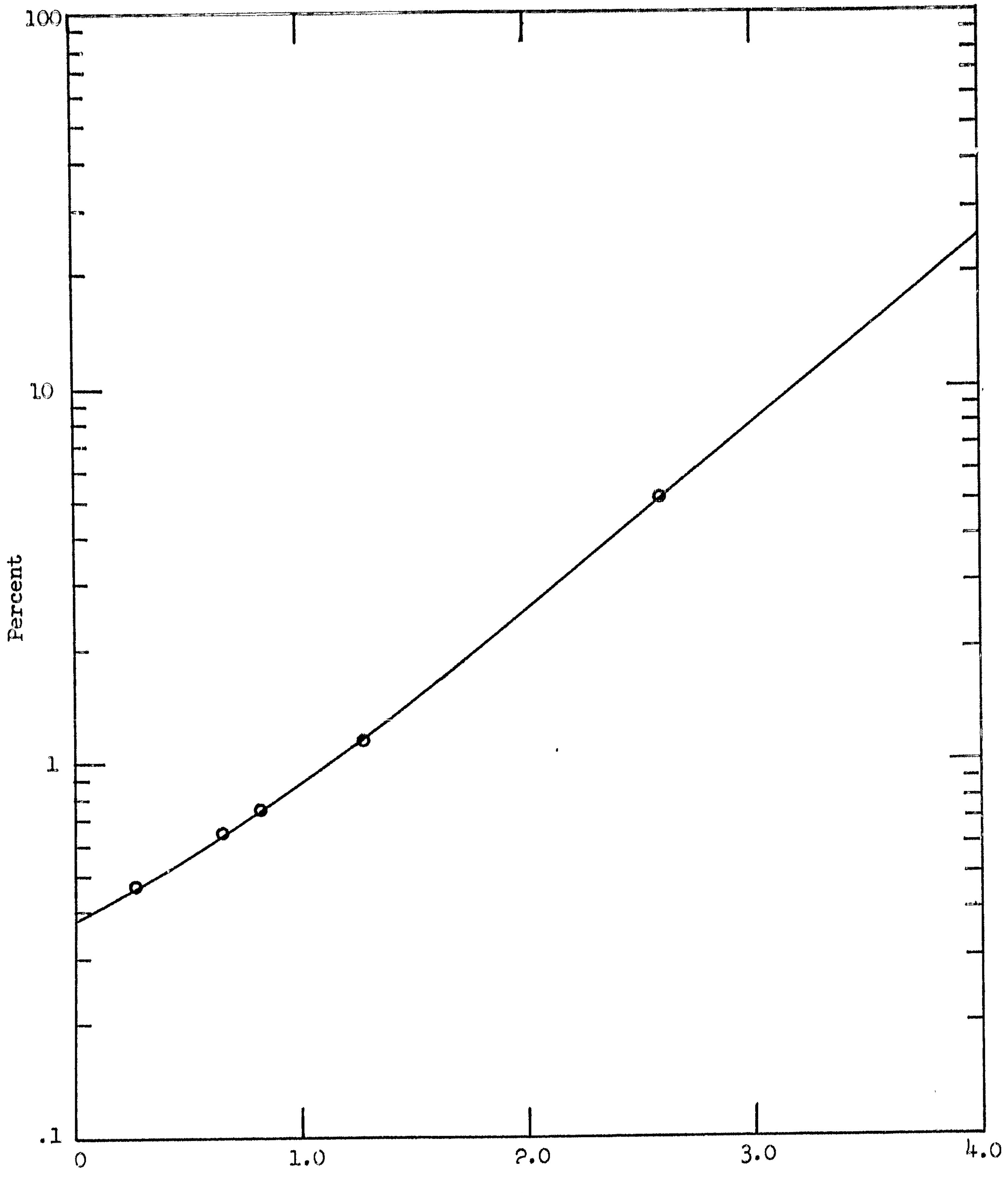

FIGURE 12 FALSE PHOTON COUNTS IN ELECTRON CHANNELS f_γ

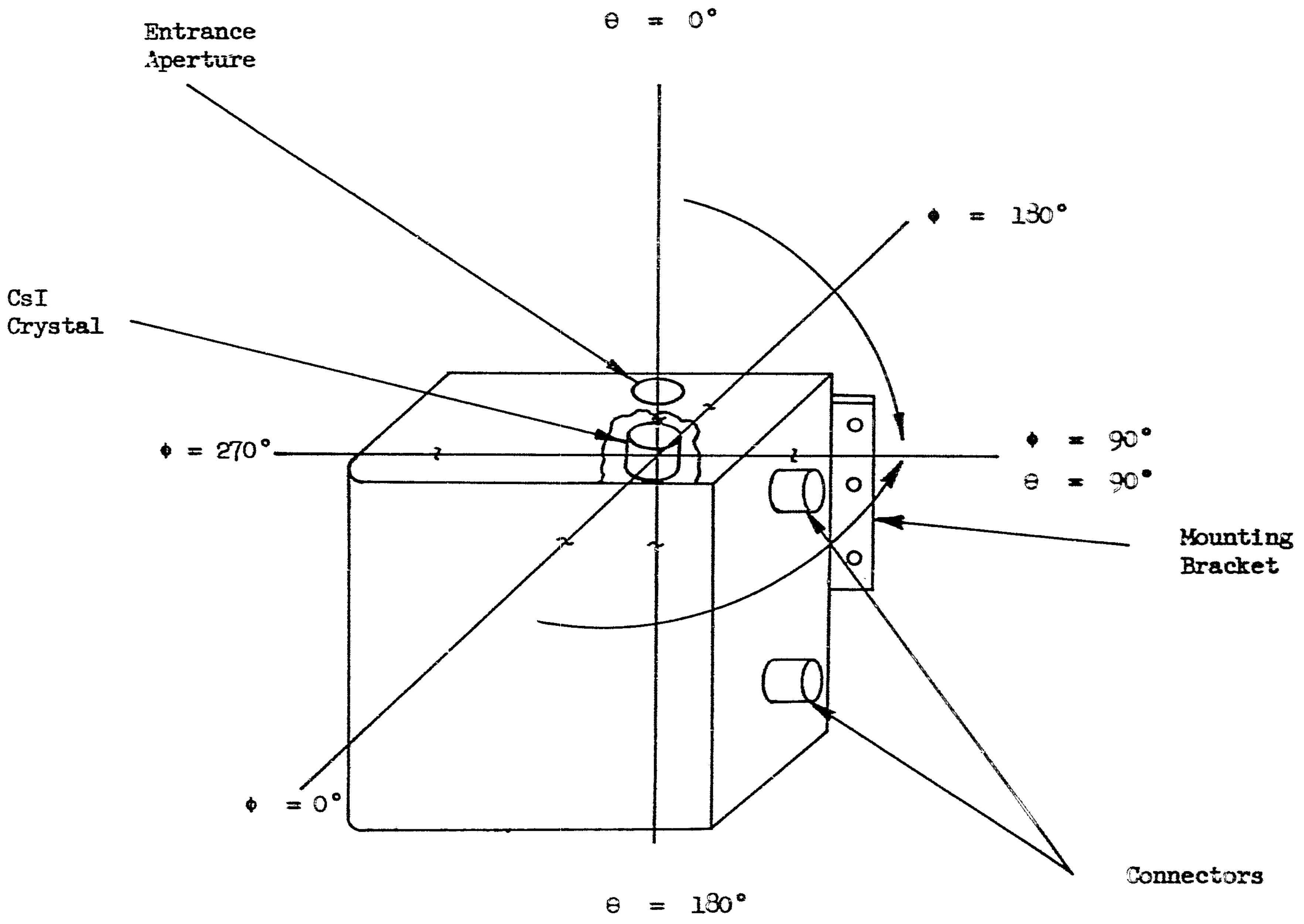

FIGURE 13 GAMMA CALIBRATION GEOMETRY

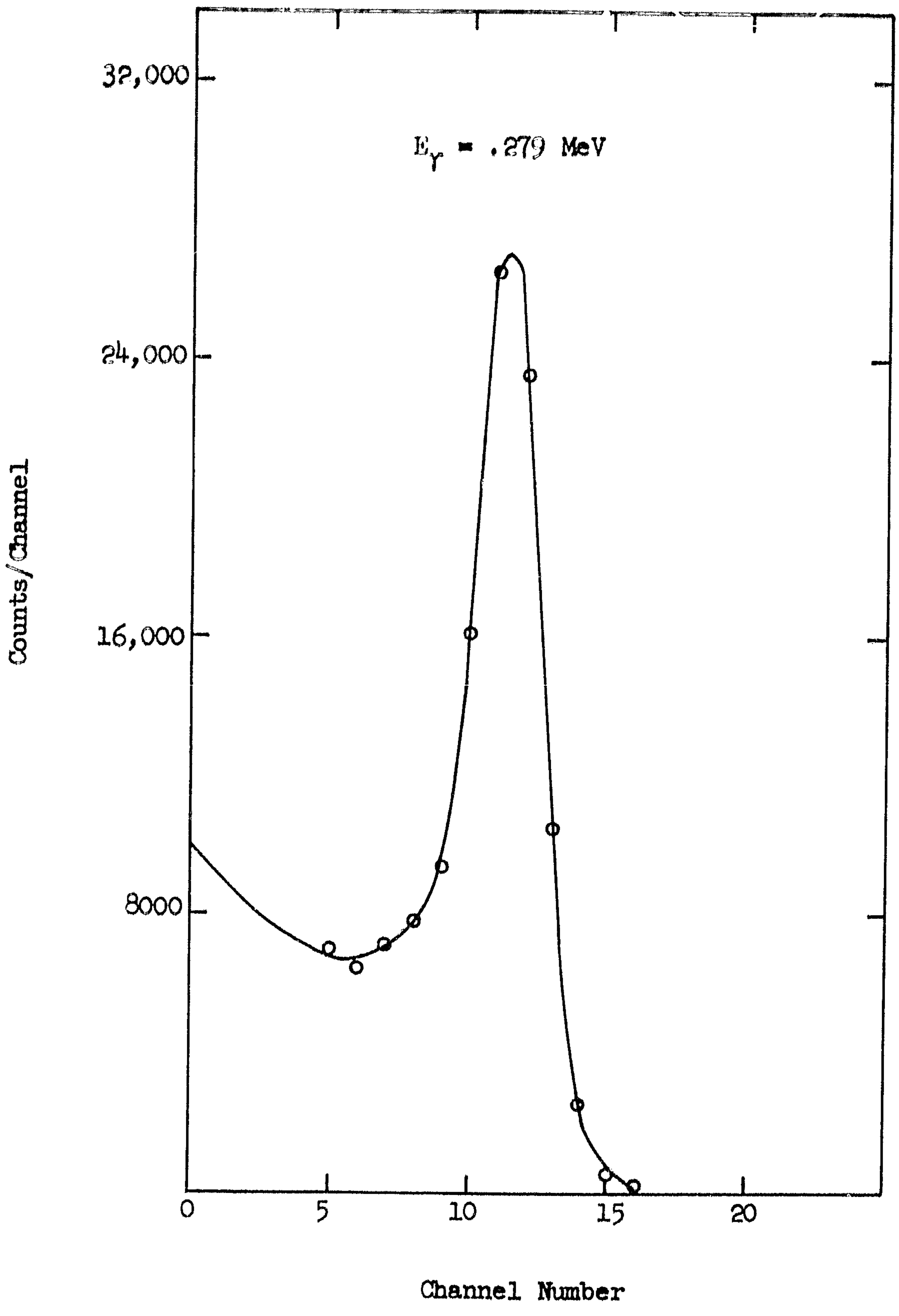

FIGURE 14 Hg-203 PULSE HEIGHT SPECTRUM

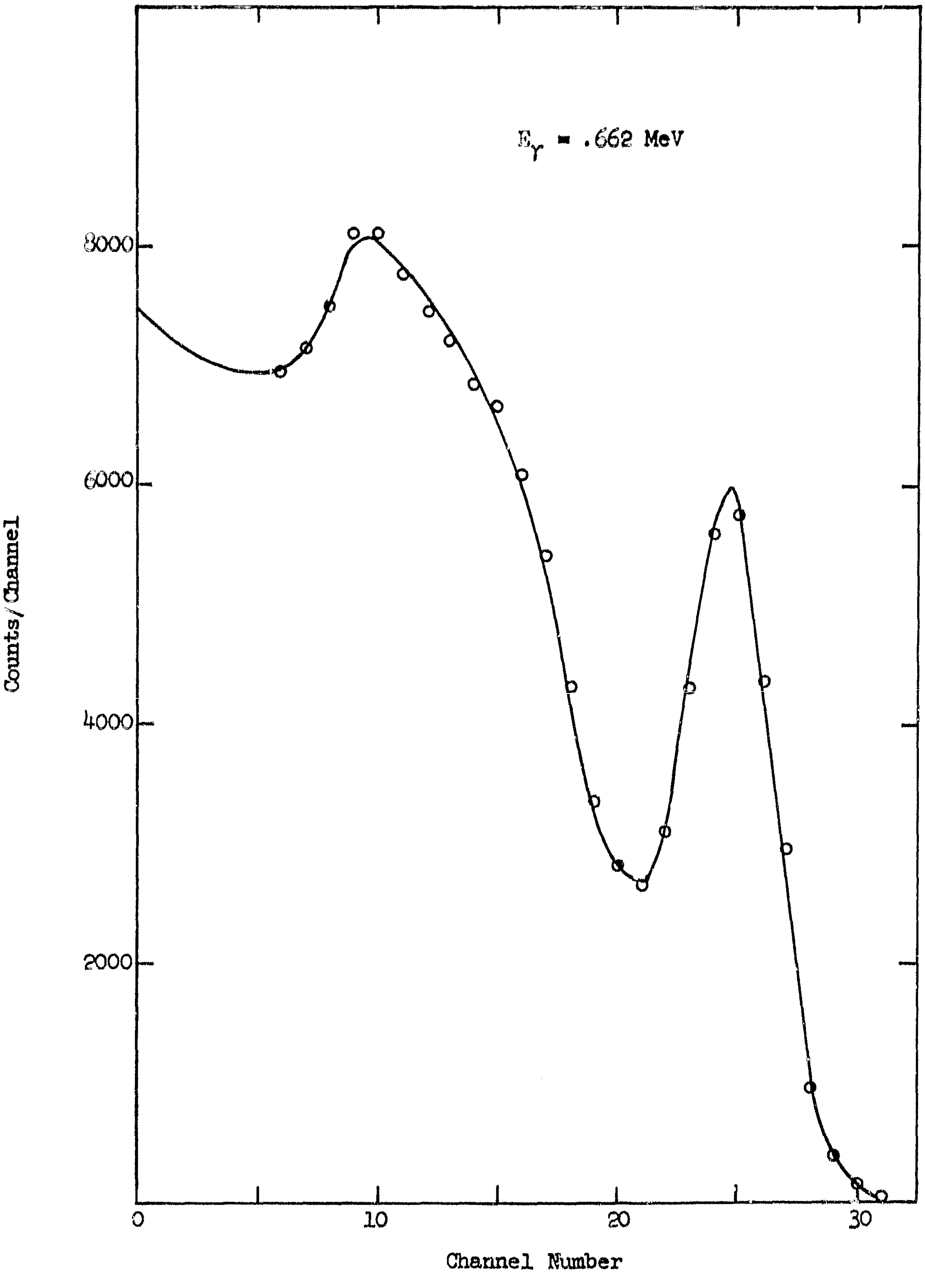

FIGURE 15 Cs-137 PULSE HEIGHT SPECTRUM

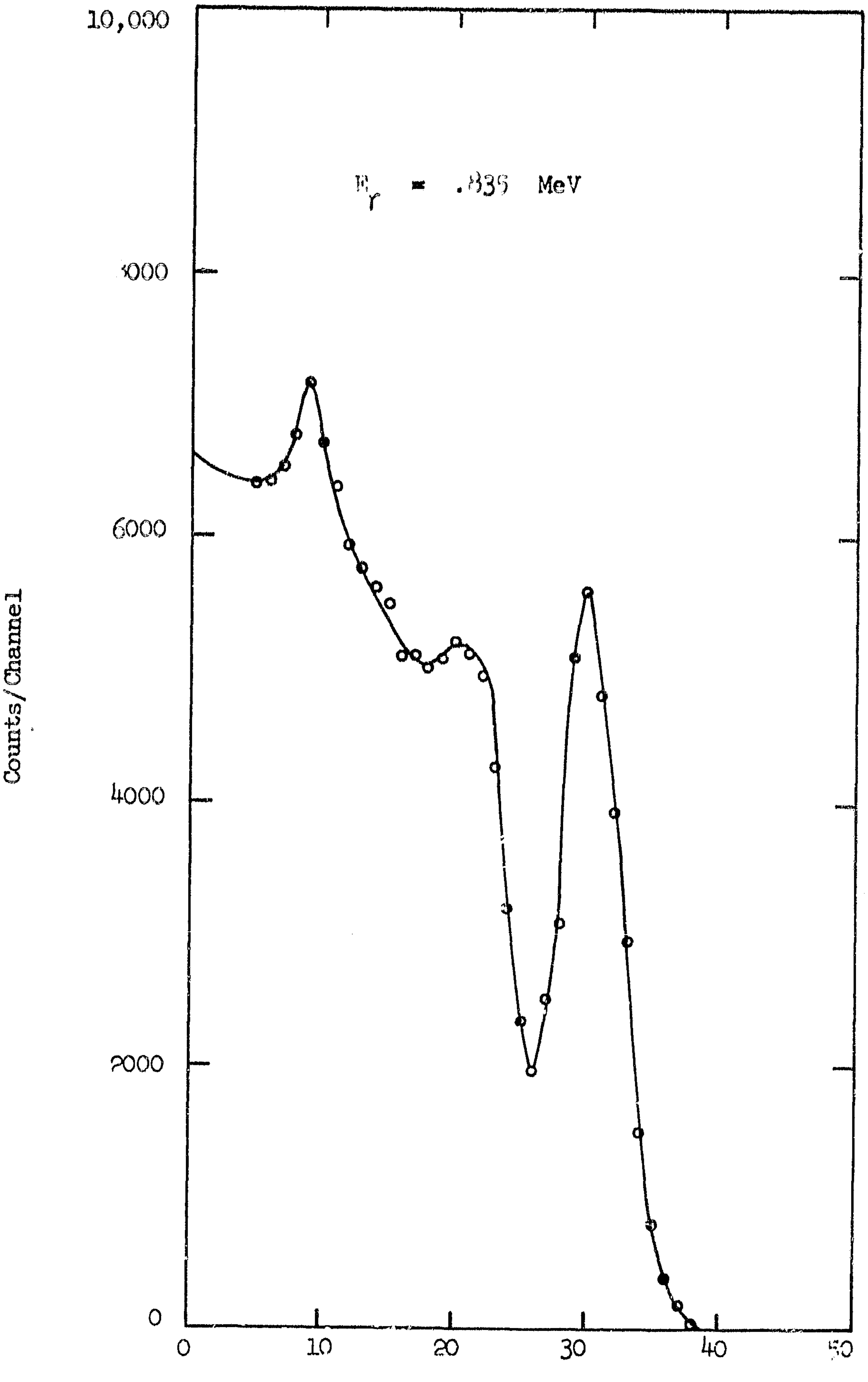

FIGURE 16 Mn-54 PULSE HEIGHT SPECTRUM

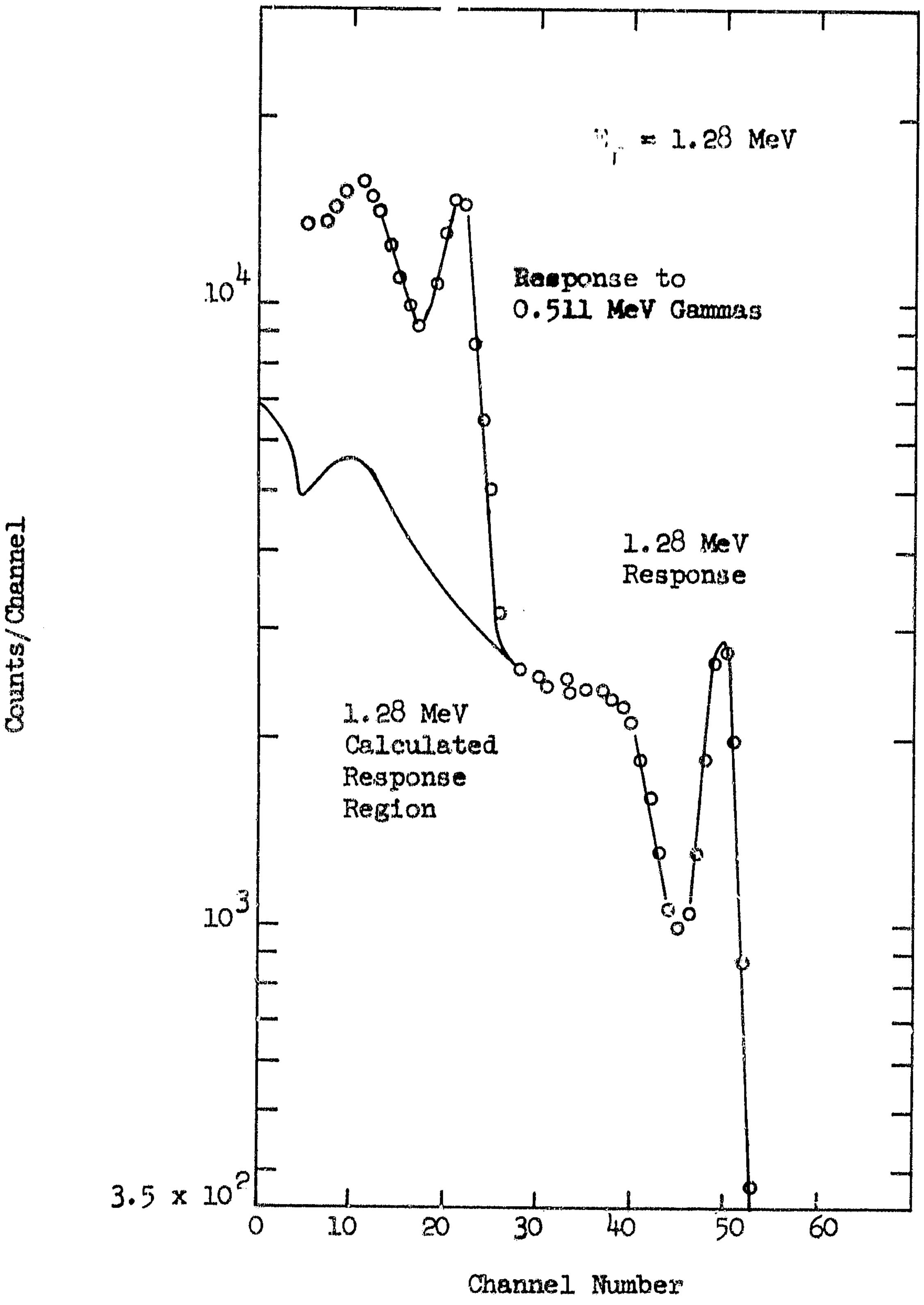

FIGURE 17 Na-22 PULSE HEIGHT SPECTRUM

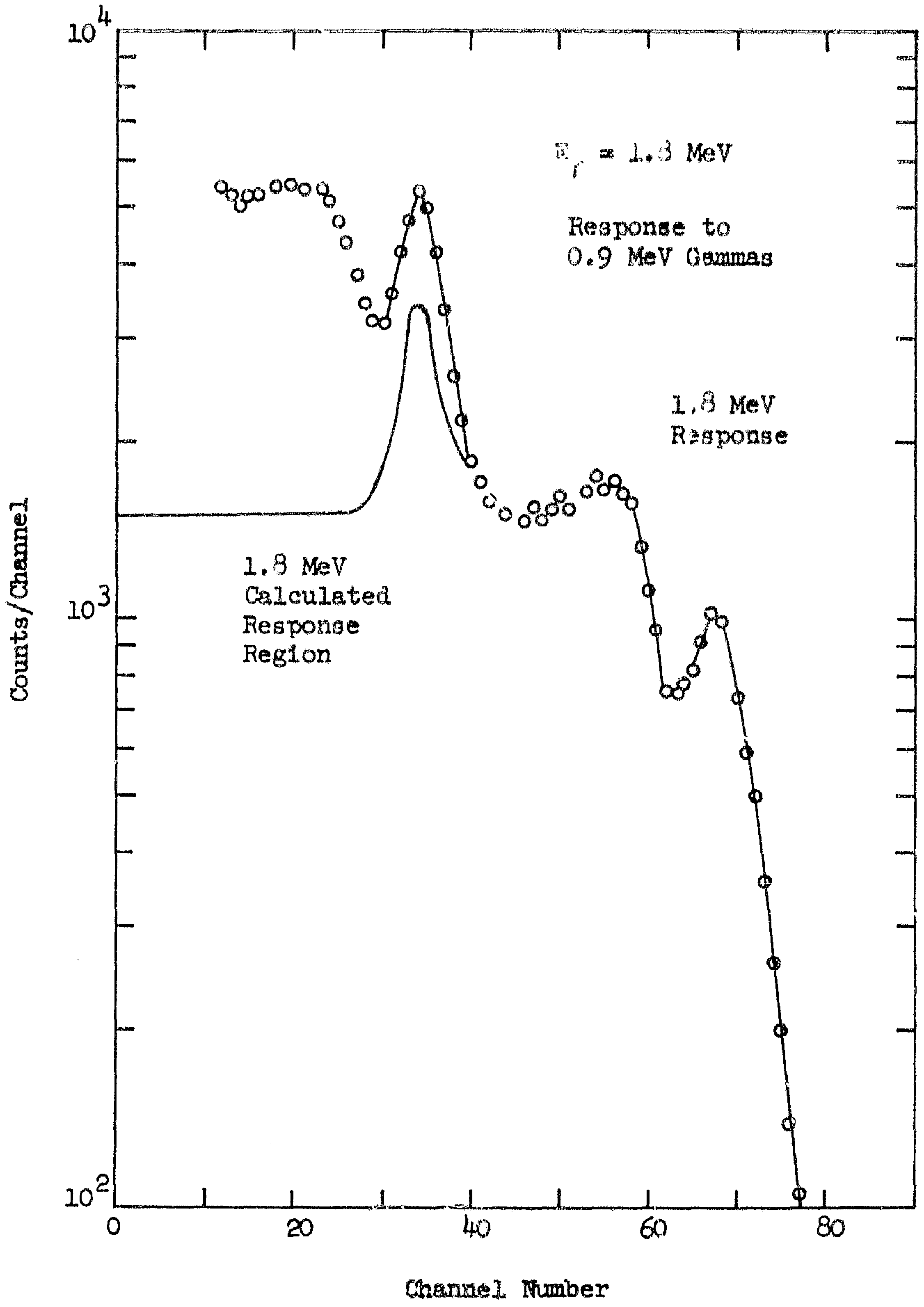

FIGURE 18 Y-88 PULSE HEIGHT SPECTRUM

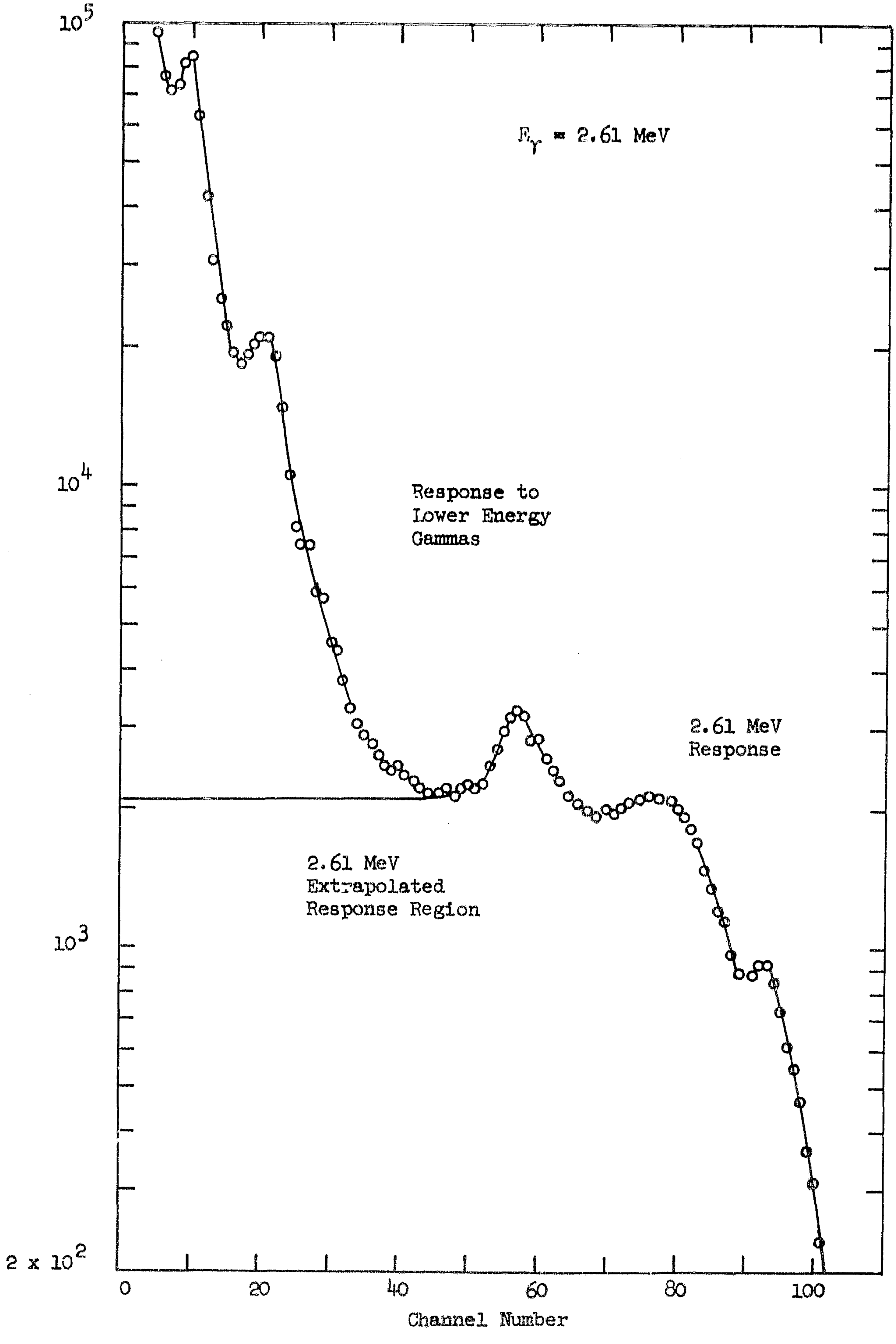

FIGURE 19 Th-226 PULSE HEIGHT SPECTRUM

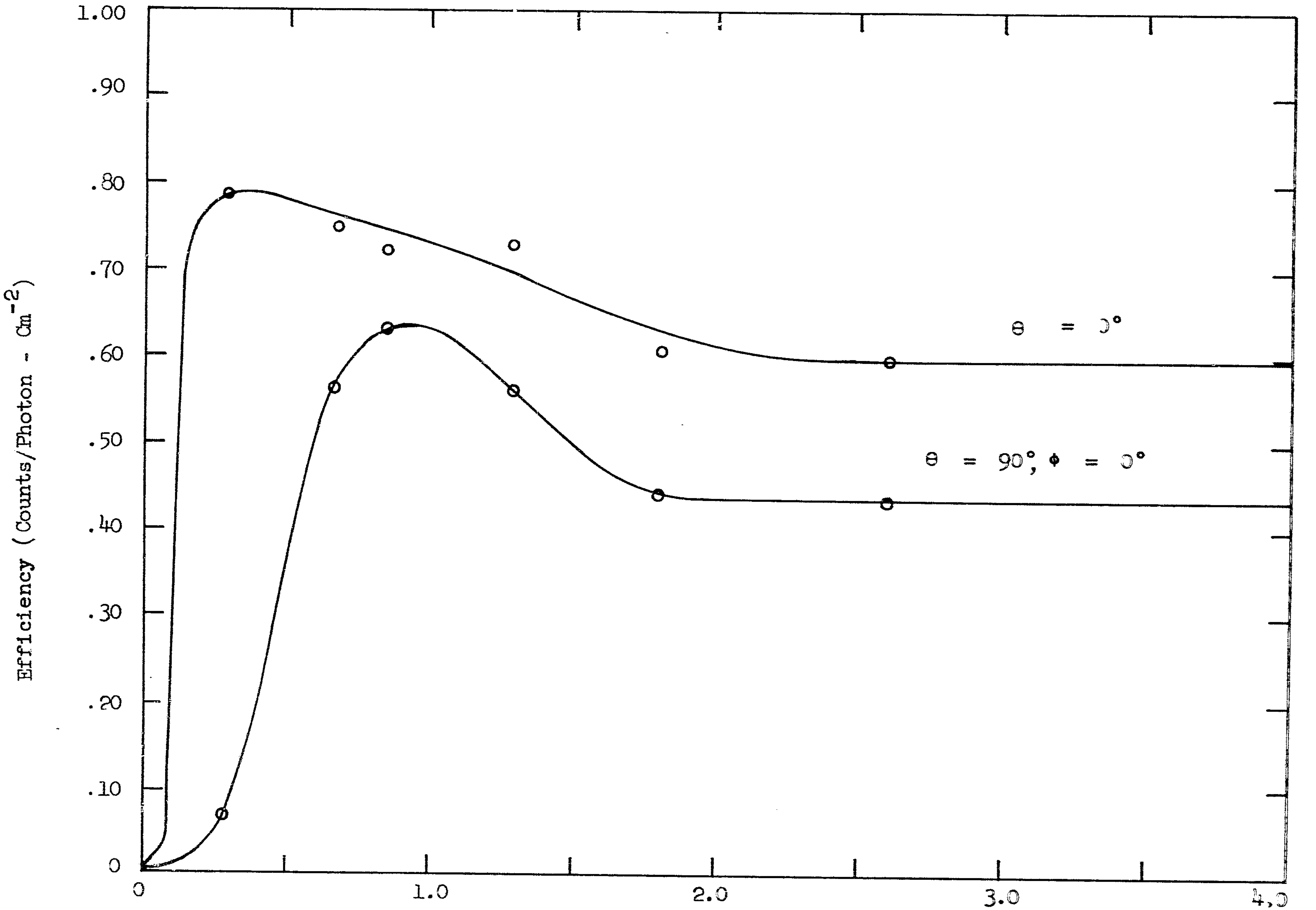

Incident Photon Energy (MeV)

FIGURE 20 GAMMA EFFICIENCY ϵ_γ

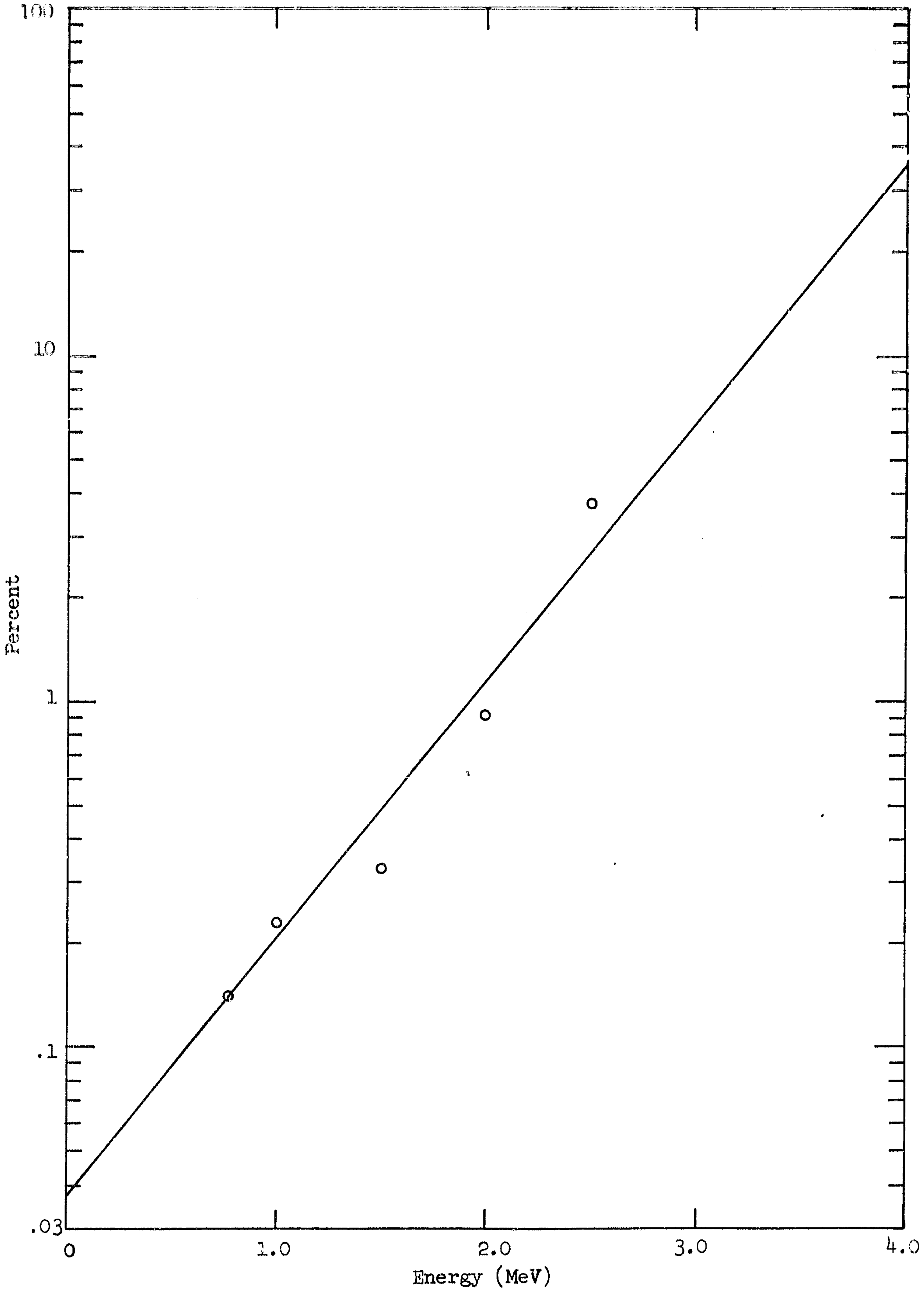

FIGURE 21 FALSE ELECTRON COUNTS IN GAMMA CHANNELS f_β

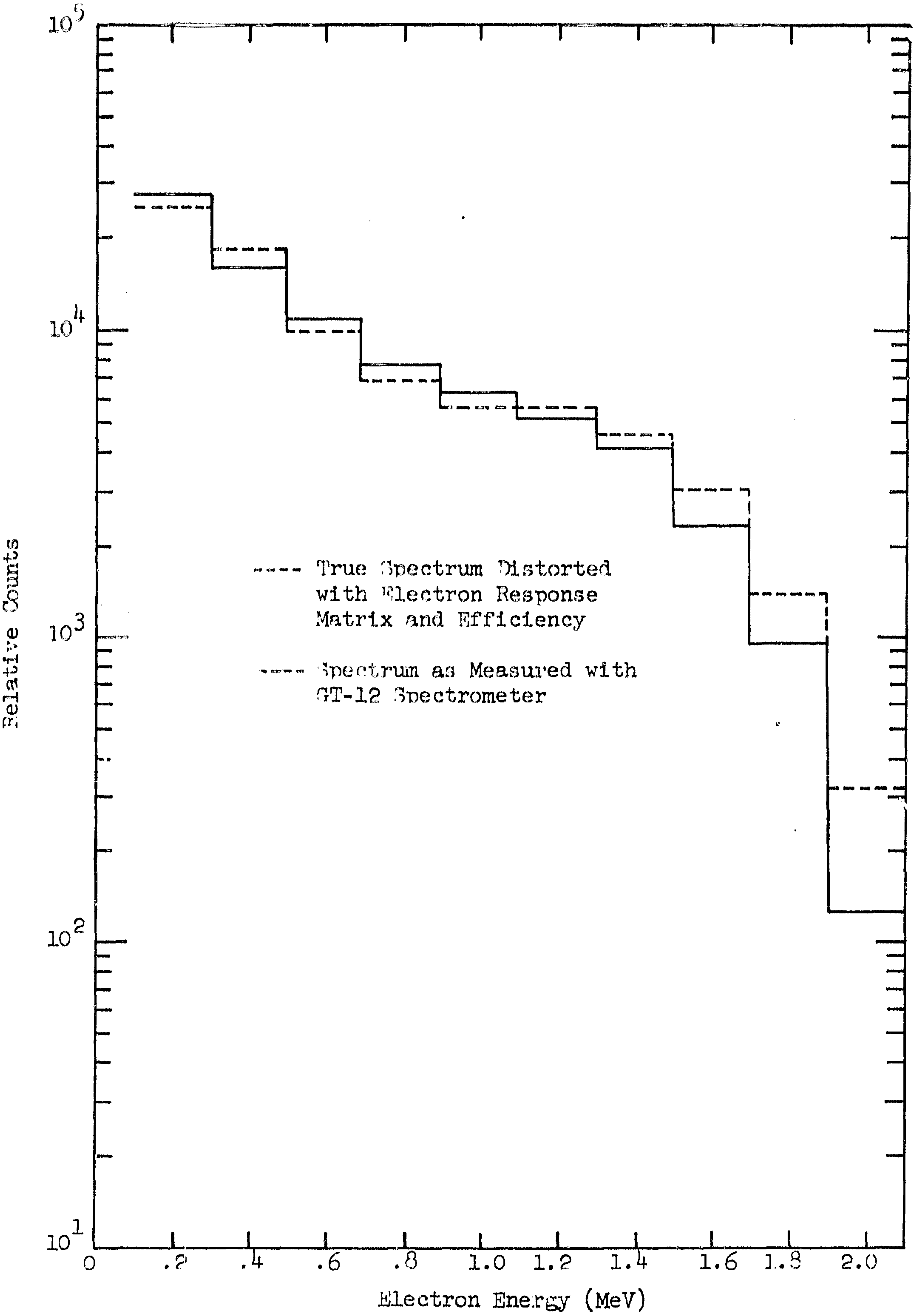

FIGURE 22 Sr-Y BETA PULSE HEIGHT SPECTRUM

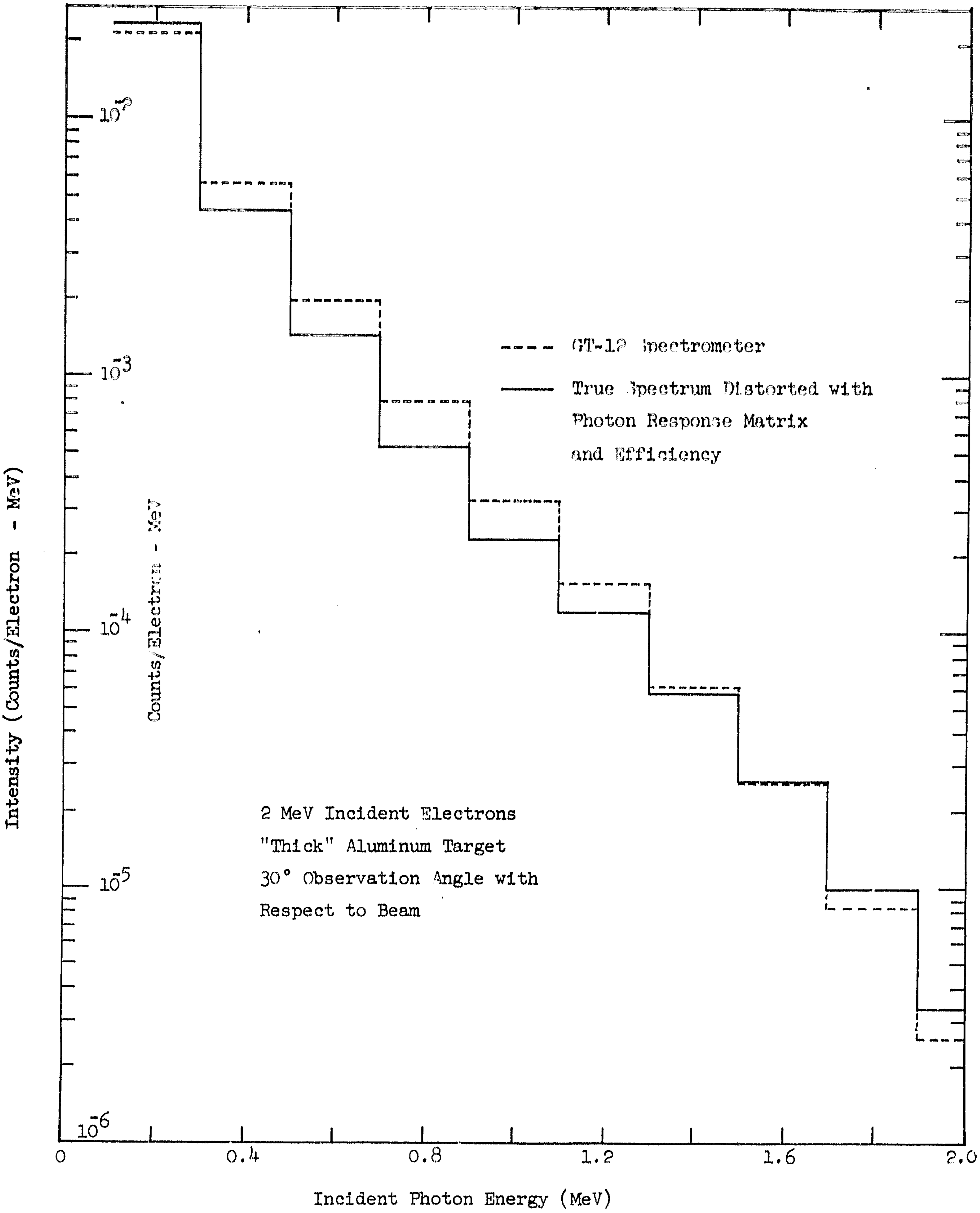

FIGURE 23 BREMSSTRAHLUNG PULSE HEIGHT SPECTRUM

TABLE 1

BETA RESPONSE MATRIX - R_β

E Incident Energy (MeV)	E' - Pulse Height(MeV)				
	0.2	0.4	0.6	0.8	1.0
0.2	0	0	0	0	0
0.4	8.33(-1)	1.13(-2)	0	0	0
0.6	1.27(-1)	8.00(-1)	6.13(-2)	0	0
0.8	4.18(-2)	3.58(-1)	5.14(-1)	8.24(-2)	0
1.0	3.95(-2)	1.72(-1)	1.57(-1)	4.37(-1)	1.91(-1)
1.2	3.35(-2)	1.38(-1)	1.10(-1)	1.11(-1)	3.26(-1)
1.4	1.83(-2)	9.46(-2)	9.48(-2)	6.54(-2)	8.42(-2)
1.6	1.38(-2)	8.35(-2)	7.56(-2)	6.53(-2)	5.89(-2)
1.8	1.25(-2)	6.10(-2)	7.63(-2)	6.33(-2)	5.36(-2)
2.0	1.14(-2)	4.35(-2)	6.33(-2)	5.88(-2)	5.24(-2)
2.2	1.08(-2)	3.23(-2)	5.22(-2)	5.78(-2)	5.48(-2)
2.4	6.42(-3)	3.09(-2)	4.83(-2)	5.16(-2)	4.94(-2)
2.6	5.94(-3)	2.48(-3)	4.01(-2)	4.40(-2)	4.38(-2)
2.8	4.58(-3)	2.14(-2)	3.66(-2)	4.00(-2)	4.00(-2)
3.0	3.64(-3)	1.85(-2)	3.00(-2)	3.57(-2)	3.81(-2)
3.2	3.08(-3)	1.48(-2)	2.73(-2)	3.30(-2)	3.58(-2)
3.4	2.92(-3)	7.84(-3)	2.36(-2)	2.78(-2)	3.06(-2)
3.6	2.47(-3)	1.20(-2)	2.38(-2)	2.87(-2)	3.10(-2)
3.8	2.01(-3)	1.12(-2)	2.22(-2)	2.70(-2)	2.97(-2)
4.0	1.77(-3)	9.21(-3)	2.03(-2)	2.58(-2)	2.88(-2)

TABLE 1

BETA RESPONSE MATRIX - R_{β} (Con't)

E Incident Energy (MeV)	E' - Pulse Height(MeV)				
	1.2	1.4	1.6	1.8	2.0
.2	0	0	0	0	0
.4	0	0	0	0	0
.6	0	0	0	0	0
.8	0	0	0	0	0
1.0	0	0	0	0	0
1.2	2.30(-1)	0	0	0	0
1.4	3.39(-1)	3.02(-1)	0	0	0
1.6	8.43(-2)	3.11(-1)	2.80(-1)	4.23(-3)	0
1.8	5.50(-2)	8.91(-2)	3.53(-1)	2.67(-1)	0
2.0	4.85(-2)	5.37(-2)	8.31(-2)	3.16(-1)	2.67(-1)
2.2	5.33(-2)	5.64(-2)	9.08(-2)	2.89(-1)	2.93(-1)
2.4	4.89(-2)	5.12(-2)	5.34(-2)	6.09(-2)	9.73(-2)
2.6	4.46(-2)	4.94(-2)	5.25(-2)	5.27(-2)	6.28(-2)
2.8	4.07(-2)	4.49(-2)	5.36(-2)	5.52(-2)	5.35(-2)
3.0	3.83(-2)	3.96(-2)	4.82(-2)	5.64(-2)	5.51(-2)
3.2	3.67(-2)	3.75(-2)	4.11(-2)	4.96(-2)	5.85(-2)
3.4	3.32(-2)	3.54(-2)	3.85(-2)	4.57(-2)	5.63(-2)
3.6	3.17(-2)	3.25(-2)	3.46(-2)	3.94(-2)	5.31(-2)
3.8	3.06(-2)	3.11(-2)	3.24(-2)	3.51(-2)	4.18(-2)
4.0	3.02(-2)	3.04(-2)	3.05(-2)	3.18(-2)	3.54(-2)

TABLE 1

BETA RESPONSE MATRIX - R_β (Con't)

E Incident Energy (MeV)	E' - Pulse Height (MeV)				
	2.2	2.4	2.6	2.8	3.0
.2	0	0	0	0	0
.4	0	0	0	0	0
.6	0	0	0	0	0
.8	0	0	0	0	0
1.0	0	0	0	0	0
1.2	0	0	0	0	0
1.4	0	0	0	0	0
1.6	0	0	0	0	0
1.8	0	0	0	0	0
2.0	2.27(-3)	0	0	0	0
2.2	9.23(-3)	0	0	0	0
2.4	2.57(-1)	2.36(-1)	1.12(-3)	0	0
2.6	1.05(-1)	2.56(-1)	2.10(-1)	8.35(-3)	0
2.8	6.73(-2)	1.06(-1)	2.33(-1)	1.92(-1)	1.15(-2)
3.0	5.37(-2)	6.98(-2)	1.05(-1)	2.11(-1)	1.81(-1)
3.2	5.49(-2)	5.87(-2)	7.54(-2)	1.06(-1)	1.94(-1)
3.4	6.05(-2)	5.49(-2)	5.87(-2)	7.57(-2)	1.01(-1)
3.6	6.21(-2)	5.89(-2)	5.03(-2)	6.06(-2)	7.52(-2)
3.8	5.61(-2)	6.29(-2)	5.55(-2)	4.80(-2)	5.95(-2)
4.0	4.78(-2)	6.14(-2)	6.07(-2)	5.10(-2)	4.77(-2)

TABLE 1

BETA RESPONSE MATRIX R_β (Con't)

E Incident Energy (MeV)	E' - Pulse Height (MeV)				
	3.2	3.4	3.6	3.8	4.0
.2	0	0	0	0	0
.4	0	0	0	0	0
.6	0	0	0	0	0
.8	0	0	0	0	0
1.0	0	0	0	0	0
1.2	0	0	0	0	0
1.4	0	0	0	0	0
1.6	0	0	0	0	0
1.8	0	0	0	0	0
2.0	0	0	0	0	0
2.2	0	0	0	0	0
2.4	0	0	0	0	0
2.6	0	0	0	0	0
2.8	0	0	0	0	0
3.0	1.93(-2)	0	0	0	0
3.2	1.57(-1)	1.67(-2)	0	0	0
3.4	1.74(-1)	1.49(-1)	2.45(-2)	0	0
3.6	9.34(-2)	1.52(-1)	1.34(-1)	2.46(-2)	0
3.8	7.15(-2)	8.65(-2)	1.29(-1)	1.26(-1)	4.17(-2)
4.0	6.18(-2)	6.86(-2)	7.80(-2)	1.14(-1)	1.23(-1)

TABLE 2

BETA EFFICIENCY MATRIX - ϵ_β

E (MeV)	ϵ_β (Counts/Electron - Cm^{-2})
0.2	0
0.4	2.37(-2)
0.6	2.50(-2)
0.8	2.34(-2)
1.0	2.22(-2)
1.2	2.24(-2)
1.4	2.34(-2)
1.6	2.43(-2)
1.8	2.45(-2)
2.0	2.43(-2)
2.2	2.38(-2)
2.4	2.34(-2)
2.6	2.32(-2)
2.8	2.32(-2)
3.0	2.32(-2)
3.2	2.32(-2)
3.4	2.32(-2)
3.6	2.32(-2)
3.8	2.32(-2)
4.0	2.32(-2)

TABLE 3

BETA CROSS-TALK RESPONSE MATRIX C_β

E Incident Energy (MeV)	E' - Pulse Height (MeV)				
	0.2	0.4	0.6	0.8	1.0
0.2	0	0	0	0	0
0.4	0	9.65(-1)	3.50(-2)	0	0
0.6	0	1.27(-1)	7.65(-1)	1.01(-1)	0
0.8	8.47(-2)	3.04(-1)	3.63(-1)	2.12(-1)	3.25(-2)
1.0	1.55(-2)	7.94(-2)	2.06(-1)	4.36(-1)	2.33(-1)
1.2	7.62(-3)	1.08(-2)	1.83(-2)	5.58(-2)	3.31(-1)
1.4	8.39(-3)	1.06(-2)	1.32(-2)	1.76(-2)	4.25(-2)
1.6	9.35(-3)	1.23(-2)	1.73(-2)	2.52(-2)	3.84(-2)
1.8	9.20(-3)	1.06(-2)	1.35(-2)	1.93(-2)	2.99(-2)
2.0	7.20(-3)	7.92(-3)	9.14(-3)	1.12(-2)	1.47(-2)
2.2	5.91(-3)	7.59(-3)	9.55(-3)	1.15(-2)	1.39(-2)
2.4	3.86(-3)	7.78(-3)	1.22(-2)	1.66(-2)	2.07(-2)
2.6	2.20(-3)	7.75(-3)	1.40(-2)	2.02(-2)	2.58(-2)
2.8	1.33(-3)	6.37(-3)	1.17(-2)	1.70(-2)	2.20(-2)
3.0	1.07(-3)	5.18(-3)	9.72(-3)	1.44(-2)	1.88(-2)
3.2	8.07(-4)	4.31(-3)	8.39(-3)	1.25(-2)	1.65(-2)
3.4	5.36(-4)	3.67(-3)	7.31(-3)	1.08(-2)	1.45(-2)
3.6	3.82(-4)	3.00(-3)	5.99(-3)	9.23(-3)	1.23(-2)
3.8	2.94(-4)	2.56(-3)	5.52(-3)	8.56(-3)	1.13(-2)
4.0	2.35(-4)	2.18(-3)	4.58(-3)	7.06(-3)	9.55(-3)

TABLE 3

BETA CROSS-TALK RESPONSE MATRIX C_β (Con't)

E Incident Energy (MeV)	E' - Pulse Height (MeV)				
	1.2	1.4	1.6	1.8	2.0
0.2	0	0	0	0	0
0.4	0	0	0	0	0
0.6	0	0	0	0	0
0.8	0	0	0	0	0
1.0	2.59(-2)	0	0	0	0
1.2	5.02(-1)	6.10(-2)	6.76(-3)	0	0
1.4	3.52(-1)	4.81(-1)	5.81(-2)	8.89(-3)	0
1.6	6.56(-2)	3.21(-1)	4.44(-1)	3.21(-2)	1.61(-2)
1.8	4.87(-2)	8.78(-2)	4.05(-1)	3.34(-1)	1.85(-2)
2.0	2.11(-2)	3.48(-2)	6.76(-2)	3.76(-1)	4.23(-1)
2.2	1.72(-2)	2.36(-2)	3.60(-2)	6.69(-2)	4.05(-1)
2.4	2.38(-2)	2.58(-2)	2.98(-2)	3.85(-2)	6.46(-2)
2.6	3.07(-2)	3.43(-2)	3.63(-2)	3.76(-2)	4.20(-2)
2.8	2.63(-2)	3.03(-2)	3.29(-2)	3.40(-2)	3.52(-2)
3.0	2.27(-2)	2.61(-2)	2.89(-2)	3.06(-2)	3.15(-2)
3.2	2.01(-2)	2.34(-2)	2.65(-2)	2.86(-2)	2.97(-2)
3.4	1.81(-2)	2.13(-2)	2.40(-2)	2.61(-2)	2.75(-2)
3.6	1.53(-2)	1.81(-2)	2.06(-2)	2.28(-2)	2.43(-2)
3.8	1.39(-2)	1.66(-2)	1.91(-2)	2.13(-2)	2.30(-2)
4.0	1.19(-2)	1.43(-2)	1.66(-2)	1.85(-2)	2.02(-2)

TABLE 3

BETA CROSS-TALK RESPONSE MATRIX C_β (Con't)

E Incident Energy (MeV)	E' - Pulse Height (MeV) 2.2	2.4	2.6	2.8	3.0
0.2	0	0	0	0	0
0.4	0	0	0	0	0
0.6	0	0	0	0	0
0.8	0	0	0	0	0
1.0	0	0	0	0	0
1.2	0	0	0	0	0
1.4	0	0	0	0	0
1.6	1.01(2)	0	0	0	0
1.8	1.02(-2)	4.42(-3)	0	0	0
2.0	1.38(-2)	4.30(-3)	1.13(-3)	0	0
2.2	3.75(-1)	1.46(-2)	4.49(-3)	2.22(-3)	7.45(-4)
2.4	3.38(-1)	3.75(-1)	3.63(-2)	2.32(-3)	1.23(-3)
2.6	7.16(-2)	3.11(-1)	3.13(-1)	4.86(-2)	1.79(-3)
2.8	4.00(-2)	7.35(-2)	2.85(-1)	3.10(-1)	6.95(-2)
3.0	3.32(-2)	3.83(-2)	8.32(-2)	2.86(-1)	2.88(-1)
3.2	3.04(-2)	3.27(-2)	3.91(-2)	9.52(-2)	2.87(-1)
3.4	2.83(-2)	2.91(-2)	3.15(-2)	3.72(-2)	8.38(-2)
3.6	2.53(-2)	2.58(-2)	2.67(-2)	2.94(-2)	3.53(-2)
3.8	2.42(-2)	2.49(-2)	2.53(-2)	2.64(-2)	2.90(-2)
4.0	2.15(-2)	2.25(-2)	2.30(-2)	2.34(-2)	2.46(-2)

TABLE 3

BETA CROSS-TALK RESPONSE MATRIX C_β (Con't)

E Incident Energy (MeV)	E' - Pulse Height (MeV)				
	3.2	3.4	3.6	3.8	4.0
0.2	0	0	0	0	0
0.4	0	0	0	0	0
0.6	0	0	0	0	0
0.8	0	0	0	0	0
1.0	0	0	0	0	0
1.2	0	0	0	0	0
1.4	0	0	0	0	0
1.6	0	0	0	0	0
1.8	0	0	0	0	0
2.0	0	0	0	0	0
2.2	0	0	0	0	0
2.4	4.55(-4)	0	0	0	0
2.6	9.72(-4)	4.00(-4)	0	0	0
2.8	2.06(-3)	1.01(-3)	7.13(-4)	1.54(-4)	0
3.0	7.62(-2)	2.97(-3)	1.02(-3)	7.19(-4)	2.62(-4)
3.2	2.68(-1)	6.85(-2)	4.44(-3)	1.04(-3)	7.42(-4)
3.4	2.71(-1)	2.71(-1)	8.28(-2)	6.80(-3)	1.13(-3)
3.6	9.05(-2)	2.96(-1)	2.47(-1)	8.00(-2)	8.23(-3)
3.8	3.57(-2)	9.03(-2)	2.46(-1)	2.56(-1)	1.01(-1)
4.0	2.72(-2)	3.45(-2)	9.14(-2)	2.26(-1)	2.55(-1)

TABLE 4

BETA CROSS-TALK EFFICIENCY MATRIX - f_β

E (MeV)	f_β
.2	.00052
.4	.00075
.6	.00105
.8	.00148
1.0	.00205
1.2	.00295
1.4	.0041
1.6	.0058
1.8	.0082
2.0	.0115
2.2	.0161
2.4	.0225
2.6	.032
2.8	.045
3.0	.064
3.2	.089
3.4	.124
3.6	.178
3.8	.245
4.0	.349

LE 5

GAMM TION SOURCES

Source	Half Life	Config.	m S ngth	Energy (MeV)	Source Strength (γ/Sec)	Date 1200 Hrs. CST
Na^{22}	2.58 Yrs.	Needle	4.0 mc	1.28	1.15 (8)	8/31/66
Na^{22}		Bottle	0.1 mc	1.28	3.54 (6)	9/8/66
Cs^{137}	30.2 Yrs.	Bottle	0.1 mc	0.662	3.21 (6)	9/9/66
Cs^{137}		Needle	3.7 mc	0.662	1.23 (8)	9/1/66
Co^{60}	5.28 Yrs.	Bottle	0.1 mc	1.17-1.33	83.51 μc	4/1/66*
Co^{60}		Needle	0.5 mc	1.17 1.33	1.42 (7) 1.42 (7)	9/1/66
Co^{60}		Needle	4.0 mc	1.17 1.33	1.39 (8) 1.39 (8)	9/1/66
Hg^{203}	46.7 Dys	Needle	0.5 mc	0.279	9.28 (6)	9/1/66
Hg^{203}		Needle	4.0 mc	0.279	5.29 (7)	9/1/66
Mn^{54}	301 Dys	Needle	0.5 mc	0.835	1.80 (7)	9/1/66
Mn^{54}		Needle	4.0 mc	0.835	1.02 (8)	9/1/66
Y^{88}	105 Dys	Needle	2.99 mc	0.9	7.71 (7)	9/9/66
				1.8	8.86 (7)	
				2.76	5.27 (5)	

* 1200 Hrs. GMT

TABLE 6

GAMMA RESPONSE MATRIX- R_γ

E Incident Energy (MeV)	E' - Pulse Height(MeV)				
	0.2	0.4	0.6	0.8	1.0
0.2	3.86(-1)	0	0	0	0
0.4	2.54(-1)	3.35(-1)	5.38(-3)	0	0
0.6	2.90(-1)	1.87(-1)	2.14(-1)	8.43(-3)	0
0.8	2.45(-1)	1.94(-1)	1.34(-1)	1.34(-1)	1.21(-2)
1.0	2.16(-1)	1.60(-1)	1.10(-1)	8.68(-2)	8.31(-2)
1.2	2.00(-1)	1.76(-1)	1.10(-1)	8.98(-2)	7.95(-2)
1.4	1.65(-1)	1.23(-1)	1.12(-1)	9.25(-2)	7.77(-2)
1.6	1.27(-1)	1.20(-1)	1.20(-1)	1.30(-1)	1.02(-1)
1.8	9.68(-2)	9.61(-2)	9.61(-2)	1.31(-1)	1.40(-1)
2.0	8.71(-2)	8.58(-2)	8.58(-2)	9.04(-2)	1.50(-1)
2.2	7.82(-2)	7.69(-2)	7.69(-2)	7.80(-2)	1.11(-1)
2.4	7.44(-2)	7.44(-2)	7.44(-2)	7.44(-2)	7.85(-2)
2.6	7.02(-2)	7.16(-2)	7.16(-2)	7.16(-2)	7.16(-2)
2.8	6.51(-2)	6.90(-2)	7.04(-2)	6.97(-2)	6.84(-2)
3.0	6.18(-2)	6.75(-2)	6.84(-2)	6.80(-2)	6.73(-2)
3.2	5.87(-2)	6.34(-2)	6.53(-2)	6.46(-2)	6.59(-2)
3.4	5.74(-2)	6.27(-2)	6.46(-2)	6.39(-2)	6.46(-2)
3.6	5.90(-2)	6.06(-2)	6.13(-2)	5.96(-2)	5.96(-2)
3.8	4.83(-2)	5.54(-2)	5.90(-2)	6.03(-2)	5.96(-2)
4.0	4.70(-2)	5.48(-2)	5.96(-2)	6.17(-2)	6.16(-2)

TABLE 6

GAMMA RESPONSE MATRIX - R_γ

E Incident Energy (MeV)	E' - Pulse Height (MeV)				
	1.2	1.4	1.6	1.8	2.0
0.2	0	0	0	0	0
0.4	0	0	0	0	0
0.6	0	0	0	0	0
0.8	0	0	0	0	0
1.0	2.56(-2)	7.10(-4)	0	0	0
1.2	6.22(-2)	2.96(-2)	1.08(-3)	0	0
1.4	6.77(-2)	4.07(-2)	3.02(-2)	1.44(-3)	0
1.6	9.46(-2)	8.08(-2)	4.80(-2)	2.91(-2)	3.92(-3)
1.8	8.97(-2)	9.74(-2)	7.04(-2)	5.15(-2)	2.74(-2)
2.0	9.90(-2)	8.68(-2)	9.10(-2)	6.25(-2)	5.15(-2)
2.2	1.21(-1)	9.09(-2)	7.98(-2)	8.35(-2)	5.61(-2)
2.4	9.17(-2)	9.83(-2)	8.77(-2)	7.51(-2)	7.75(-2)
2.6	7.16(-2)	7.89(-2)	1.02(-1)	7.78(-2)	6.85(-2)
2.8	6.48(-2)	5.79(-2)	8.72(-2)	9.61(-2)	6.79(-2)
3.0	6.21(-2)	5.03(-2)	5.35(-2)	9.87(-2)	8.78(-2)
3.2	6.09(-2)	4.68(-2)	4.09(-2)	6.73(-2)	1.06(-1)
3.4	6.27(-2)	5.02(-2)	3.45(.2)	3.72(-2)	8.38(-2)
3.6	6.05(-2)	4.97(-2)	3.25(-2)	2.89(-2)	4.82(-2)
3.8	5.73(-2)	5.15(-2)	3.83(-2)	2.57(-2)	2.52(-2)
4.0	5.89(-2)	5.30(-2)	3.97(-2)	2.37(-2)	2.32(-2)

TABLE 6

GAMMA RESPONSE MATRIX - R_γ

E Incident Energy (MeV)	E' - Pulse Height (MeV)				
	2.2	2.4	2.6	2.8	3.0
0.2	0	0	0	0	0
0.4	0	0	0	0	0
0.6	0	0	0	0	0
0.8	0	0	0	0	0
1.0	0	0	0	0	0
1.2	0	0	0	0	0
1.4	0	0	0	0	0
1.6	7.70(-4)	0	0	0	0
1.8	3.83(-3)	8.70(-4)	0	0	0
2.0	1.66(-2)	2.58(-3)	9.90(-4)	0	0
2.2	4.74(-2)	1.64(-2)	2.53(-3)	9.70(-4)	0
2.4	5.10(-2)	4.60(-2)	1.86(-2)	2.36(-3)	1.01(-3)
2.6	7.06(-2)	4.86(-2)	3.73(-2)	1.46(-2)	3.06(-3)
2.8	6.17(-2)	6.17(-2)	4.94(-2)	3.22(-2)	1.29(-2)
3.0	5.90(-2)	5.62(-2)	5.64(-2)	4.61(-2)	2.87(-2)
3.2	7.25(-2)	4.92(-2)	4.88(-2)	5.25(-2)	3.90(-2)
3.4	9.90(-2)	5.47(-2)	4.85(-2)	4.49(-2)	5.06(-2)
3.6	1.05(-1)	8.34(-2)	4.25(-2)	4.14(-2)	3.71(-2)
3.8	6.65(-2)	1.10(-1)	9.28(-2)	4.46(-2)	3.46(-2)
4.0	2.39(-2)	8.61(-2)	1.12(-2)	5.65(-2)	3.62(-2)

TABLE 6

GAMMA RESPONSE MATRIX - R_γ

E Incident Energy (MeV)	E' - Pulse Height (MeV) 3.2	3.4	3.6	3.8	4.0
0.2	0	0	0	0	0
0.4	0	0	0	0	0
0.6	0	0	0	0	0
0.8	0	0	0	0	0
1.0	0	0	0	0	0
1.2	0	0	0	0	0
1.4	0	0	0	0	0
1.6	0	0	0	0	0
1.8	0	0	0	0	0
2.0	0	0	0	0	0
2.2	0	0	0	0	0
2.4	0	0	0	0	0
2.6	1.15(-3)	0	0	0	0
2.8	3.24(-3)	1.28(-3)	7.40(-4)	0	0
3.0	6.37(-2)	3.97(-3)	1.57(-3)	8.20(-4)	0
3.2	2.33(-2)	1.33(-2)	5.11(-3)	1.74(-3)	8.00(-4)
3.4	3.13(-2)	1.92(-2)	1.16(-2)	4.82(-3)	1.63(-3)
3.6	4.58(-2)	3.22(-2)	1.63(-2)	1.03(-2)	5.37(-3)
3.8	3.25(-2)	3.95(-2)	2.36(-2)	1.52(-2)	1.08(-2)
4.0	3.05(-2)	3.13(-2)	3.94(-2)	2.02(-2)	1.56(-2)

TABLE 7

GAMMA EFFICIENCY MATRICES - $\epsilon_\gamma (\theta, \phi)$

E (MeV)	$\epsilon_\gamma(\theta,\phi)$ (Counts/Photon - Cm^{-2})		
	θ,ϕ = 0°0°	θ,ϕ = 180°,0°	θ,ϕ = 90°, 0°
0.2	.720	.928	.046
0.4	.780	.820	.241
0.6	.768	.702	.501
0.8	.753	.690	.617
1.0	.733	.610	.630
1.2	.708	.595	.583
1.4	.685	.583	.517
1.6	.660	.568	.468
1.8	.638	.555	.439
2.0	.623	.545	.435
2.2	.610	.537	.435
2.4	.603	.532	.435
2.6	.601	.525	.435
2.8	.600	.519	.435
3.0	.600	.515	.435
3.2	.600	.510	.435
3.4	.600	.510	.435
3.6	.600	.510	.435
3.8	.600	.510	.435
4.0	.600	.510	.435

TABLE 8

GAMMA EFFICIENCY MULTIPLIERS

Θ (deg)	ϕ (deg)	$N_{\Theta,\phi} = \dfrac{\epsilon_\gamma(\Theta,\phi)}{\epsilon_\gamma(90^\circ,0^\circ)}$
45	0	0.83
45	45	0.86
45	90	0.83
45	135	0.84
45	180	0.85
45	225	0.79
45	270	0.88
45	315	0.90
90	0	1.00
90	45	0.88
90	90	0.68
90	135	1.08
90	180	1.13
90	225	1.11
90	270	1.00
90	315	1.07
135	0	0.96
135	45	0.61
135	90	0.76
135	135	0.97
135	180	1.01
135	225	1.00
135	270	0.86
135	315	0.83

TABLE 9

GAMMA CROSS-TALK RESPONSE MATRIX - C_γ

E Incident Energy (MeV)	E' - Pulse Height(MeV)				
	0.2	0.4	0.6	0.8	1.0
0.2	3.32(-1)	0	0	0	0
0.4	3.65(-1)	6.88(-2)	0	0	0
0.6	3.62(-1)	1.42(-1)	2.45(-2)	0	0
0.8	3.36(-1)	1.88(-1)	6.39(-2)	1.25(-2)	0
1.0	3.13(-1)	2.08(-1)	9.31(-2)	3.06(-2)	9.88(-3)
1.2	2.85(-1)	2.10(-1)	1.16(-1)	5.17(-2)	2.03(-2)
1.4	2.55(-1)	2.06(-1)	1.33(-1)	7.31(-2)	3.58(-2)
1.6	2.30(-1)	1.96(-1)	1.43(-1)	8.98(-2)	5.04(-2)
1.8	1.93(-1)	1.76(-1)	1.43(-1)	1.06(-1)	7.24(-2)
2.0	1.68(-1)	1.57(-1)	1.35(-1)	1.09(-1)	8.32(-2)
2.2	1.39(-1)	1.34(-1)	1.23(-1)	1.07(-1)	8.92(-2)
2.4	1.20(-1)	1.14(-1)	1.06(-1)	9.64(-2)	8.53(-2)
2.6	1.01(-1)	9.49(-2)	8.95(-2)	8.40(-2)	7.86(-2)
2.8	8.80(-2)	7.98(-2)	7.60(-2)	7.66(-2)	7.60(-2)
3.0	7.63(-2)	7.45(-2)	7.05(-2)	7.22(-2)	7.28(-2)
3.2	7.05(-2)	6.53(-2)	6.30(-2)	6.36(-2)	6.36(-2)
3.4	6.48(-2)	6.32(-2)	5.93(-2)	5.93(-2)	5.99(-2)
3.6	5.80(-2)	5.75(-2)	5.65(-2)	5.60(-2)	5.60(-2)
3.8	5.33(-2)	5.33(-2)	5.28(-2)	5.24(-2)	5.18(-2)
4.0	5.24(-2)	5.24(-2)	5.14(-2)	4.86(-2)	4.95(-2)

TABLE 9

GAMMA CROSS-TALK RESPONSE MATRIX - C_γ (Con't)

E Incident Energy (MeV)	E' - Pulse Height (MeV) 1.2	1.4	1.6	1.8	2.0
0.2	0	0	0	0	0
0.4	0	0	0	0	0
0.6	0	0	0	0	0
0.8	0	0	0	0	0
1.0	0	0	0	0	0
1.2	9.11(3)	0	0	0	0
1.4	1.78(-2)	9.64(-3)	0	0	0
1.6	2.74(-2)	1.55(-2)	9.27(-3)	0	0
1.8	4.48(-2)	2.78(-2)	1.89(-2)	1.31(-2)	8.88(-3)
2.0	6.10(-2)	4.30(-2)	2.97(-2)	2.05(-2)	1.39(-2)
2.2	7.16(-2)	5.60(-2)	4.34(-2)	3.30(-2)	2.46(-2)
2.4	7.46(-2)	6.45(-2)	5.10(-2)	4.68(-2)	3.86(-2)
2.6	7.35(-2)	6.83(-2)	6.25(-2)	5.67(-2)	5.06(-2)
2.8	7.22(-2)	6.65(-2)	6.20(-2)	6.14(-2)	5.79(-2)
3.0	6.99(-2)	6.00(-2)	5.74(-2)	5.76(-2)	5.88(-2)
3.2	6.25(-2)	5.96(-2)	5.62(-2)	5.56(-2)	5.73(-2)
3.4	5.93(-2)	5.77(-2)	5.60(-2)	5.36(-2)	5.27(-2)
3.6	5.44(-2)	5.28(-2)	5.23(-2)	5.08(-2)	4.92(-2)
3.8	5.09(-2)	5.04(-2)	4.99(-2)	4.91(-2)	4.76(-2)
4.0	4.91(-2)	4.76(-2)	4.72(-2)	4.62(-2)	4.54(-2)

TABLE 9

GAMMA CROSS-TALK RESPONSE MATRIX - C_γ (Con't)

E Incident Energy (MeV)	E' - Pulse Height(MeV)				
	2.2	2.4	2.6	2.8	3.0
0.2	0	0	0	0	0
0.4	0	0	0	0	0
0.6	0	0	0	0	0
0.8	0	0	0	0	0
1.0	0	0	0	0	0
1.2	0	0	0	0	0
1.4	0	0	0	0	0
1.6	0	0	0	0	0
1.8	0	0	0	0	0
2.0	9.31(-3)	0	0	0	0
2.2	1.77(-2)	1.21(-2)	8.38(-3)	0	0
2.4	3.07(-2)	2.34(-2)	1.63(-2)	9.77(-3)	0
2.6	4.41(-2)	3.66(-2)	2.72(-2)	1.76(-2)	9.96(-2)
2.8	5.19(-2)	4.43(-2)	3.67(-2)	2.78(-2)	1.80(-2)
3.0	5.71(-2)	5.18(-2)	4.40(-2)	3.64(-2)	2.80(-2)
3.2	5.79(-2)	5.53(-2)	5.10(-2)	4.53(-2)	3.72(-2)
3.4	5.49(-2)	5.38(-2)	5.11(-2)	4.75(-2)	4.34(-2)
3.6	4.98(-2)	5.08(-2)	4.92(-2)	4.66(-2)	4.43(-2)
3.8	4.66(-2)	4.69(-2)	4.69(-2)	4.56(-2)	4.41(-2)
4.0	4.46(-2)	4.39(-2)	4.29(-2)	4.20(-2)	4.10(-2)

TABLE 9

GAMMA CROSS-TALK RESPONSE MATRIX - C_γ (Con't)

E Incident Energy (MeV)	E' - Pulse Height (MeV)				
	3.2	3.4	3.6	3.8	4.0
0.2	0	0	0	0	0
0.4	0	0	0	0	0
0.6	0	0	0	0	0
0.8	0	0	0	0	0
1.0	0	0	0	0	0
1.2	0	0	0	0	0
1.4	0	0	0	0	0
1.6	0	0	0	0	0
1.8	0	0	0	0	0
2.0	0	0	0	0	0
2.2	0	0	0	0	0
2.4	0	0	0	0	0
2.6	0	0	0	0	0
2.8	1.00(-2)	0	0	0	0
3.0	1.83(-2)	9.90(-3)	0	0	0
3.2	2.95(-2)	2.03(-2)	1.05(-2)	0	0
3.4	3.74(-2)	2.99(-2)	2.03(-2)	1.02(-2)	0
3.6	4.12(-2)	3.73(-2)	3.11(-2)	2.36(-2)	1.58(-2)
3.8	4.24(-2)	3.94(-2)	3.59(-2)	3.09(-2)	2.44(-2)
4.0	3.96(-2)	3.99(-2)	3.87(-2)	3.61(-2)	3.18(-2)

TABLE 10

GAMMA CROSS-TALK EFFICIENCY MATRIX - f_γ

E (MeV)	f_γ
.2	.0044
.4	.0053
.6	.0062
.8	.0074
1.0	.0088
1.2	.0105
1.4	.0131
1.6	.0165
1.8	.0205
2.0	.0260
2.2	.0325
2.4	.041
2.6	.051
2.8	.064
3.0	.080
3.2	.100
3.4	.125
3.6	.158
3.8	.200
4.0	.250

TABLE 11

SYSTEM CHANNEL BOUNDARIES

Calibration Reference - 2.615 MeV = 4.00 volts

Bremsstrahlung Channels

Channel Number	Lower (volts)	Upper (volts)	Width (volts)
1	0.345	0.427	0.082
2	0.427	0.764	0.336
3	0.764	1.709	0.945
4	1.709	2.627	0.918
5	2.627	5.491	2.864

Beta Channels

Channel Number	Lower (volts)	Upper (volts)	Width (volts)
1	0.296	0.709	0.413
2	0.709	1.727	1.018
3	1.727	2.854	1.127
4	2.854	4.236	1.382
5	4.236	5.491	1.254

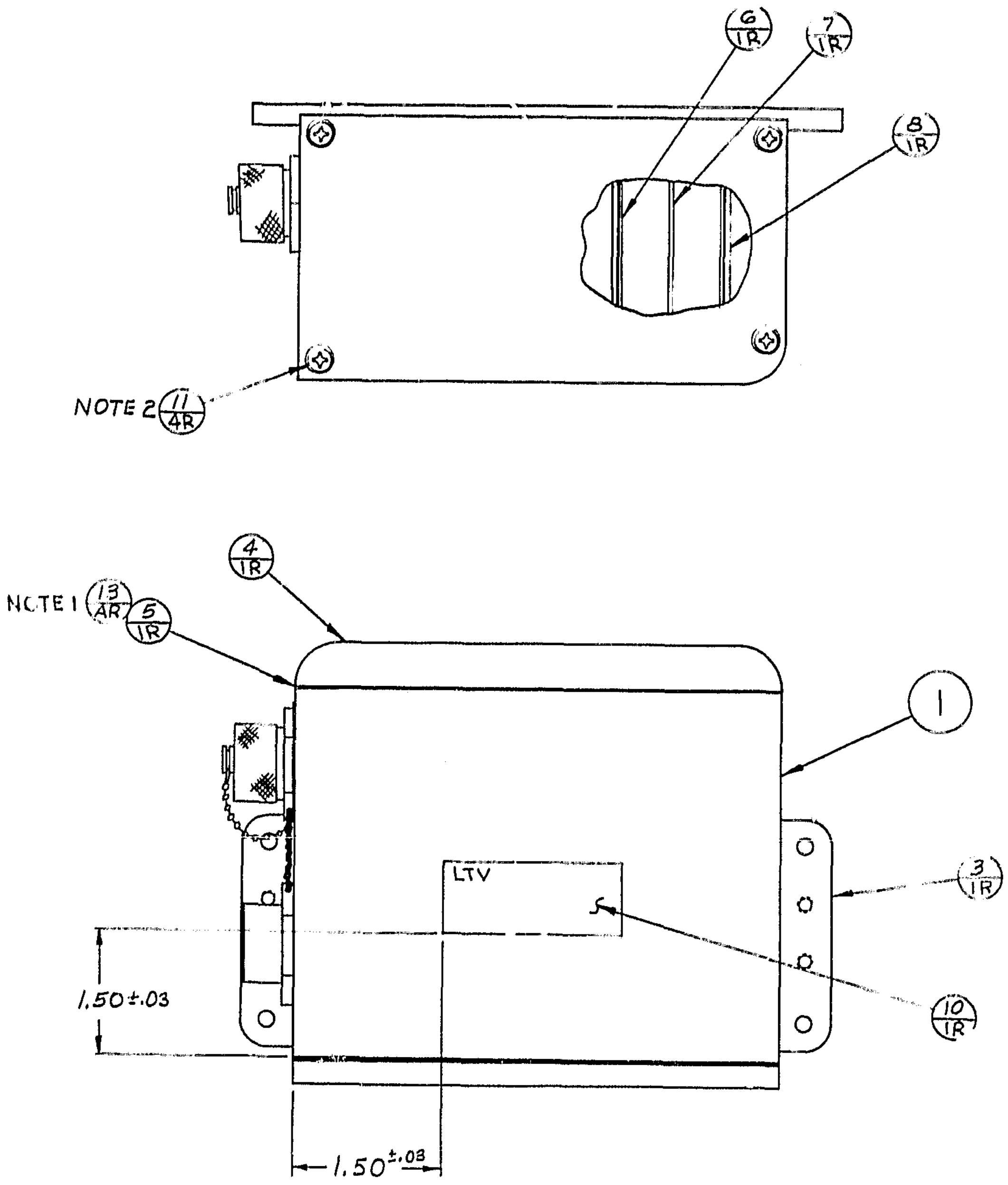

QTY PER MAJOR ASSY	NEXT ASSEMBLY
	[illegible]

Foldout FRAME 1.

NOTES:

1. BOND ITEM 5 TO ITEM 4 USING ITEM 13
2. TORQUE SCREWS UNTIL RUBBER COMPRESSES OUT AROUND ENTIRE MOUNTING PERIPHERY.
3. INSTALL ITEM 4 WITH UNIT IN NITROGEN ATMOSPHERE

REVISIONS

ZONE	LTR	DESCRIPTION	DATE	APPROVED
	A	ADDED DUST CAP & SAFETY WIRE [illegible] ADDED NOTE 3	8-19-66 8-31-66	[illegible]

				-01	ZONE	ITEM	CODE IDENT NO.	PART OR IDENTIFYING NO.	NOMENCLATURE OR DESCRIPTION	MATERIAL AND FINISH OR NOTE OR REF DES
QUANTITY REQUIRED										
				REF		15		N100-00930	BRACKET MTG	
				REF		14		N100-00920	CASE OUTLINE	
				AR		13		RTV 102	SEALANT	GENERAL ELECTRIC, WATERFORD, N.Y.
						12				
				4		11		NAS601-7P	SCREW	
				1		10		LTVKC-CINP	NAMEPLATE	
						9				
				1		8		N100-13000-01	BD ASSY	A4-A5
				1		7		N100-12000-01	BD ASSY	A2-A3
				1		6		N100-11000-01	BD ASSY	A1
				1		5		N100-10015-01	GASKET	
				1		4		N100-10003-01	COVER, TOP	
				1		3		N100-10000-01	ASSY	
						2				
						1		-01	ASSY	

LIST OF MATERIAL OR PARTS LIST

QTY PER MAJOR ASSY	NEXT ASSEMBLY	USED ON
	GEMINI 12	GEMINI 12

UNLESS OTHERWISE SPECIFIED
TOLERANCES ON:
2 PLACE DEC ±.02 3 PLACE DEC ±.010
ANGLES
MACHINED ±0° 15' FORMED ±1° SHEARED ±0° 30'
HOLE TOLERANCE PER AND 10387
SURFACE ROUGHNESS PER MIL-STD-10
MACHINED SURFACE FINISH 125√
DIMENSIONING AND TOLERANCING PER MIL-STD-8
ECCENTRICITY BETWEEN ANY DIA(S) ON THE SAME CENTERLINE SHALL NOT EXCEED .010 TOTAL INDICATOR READING
ALL DIM. ARE IN INCHES & INCLUDE APPLIED FINISH
WELD SYMBOLS PER MIL-STD-19
RIVET CODE PER NAS 523
THREADS PER MIL-S-7742
MARK PER MIL-STD-130
REMOVE ALL BURRS AND SHARP EDGES
SPECIFICATIONS:

PROJ ENGR
COMP ENGR
MAT'L/PROC ENGR
STRUCT WTS
GROUP APP
CHECKED BY [illegible] 8/1/66
DRAWN BY CARTWRIGHT 7-27-66
ENGR GROUP 0-71100

LTV RESEARCH CENTER

B-γ SPECTROMETER ASSY

SIZE D CODE IDENT NO. 11817 N100-00000

SCALE: 1/1 REV. A SHEET

N100-00000 A

Foldout FRAME 2

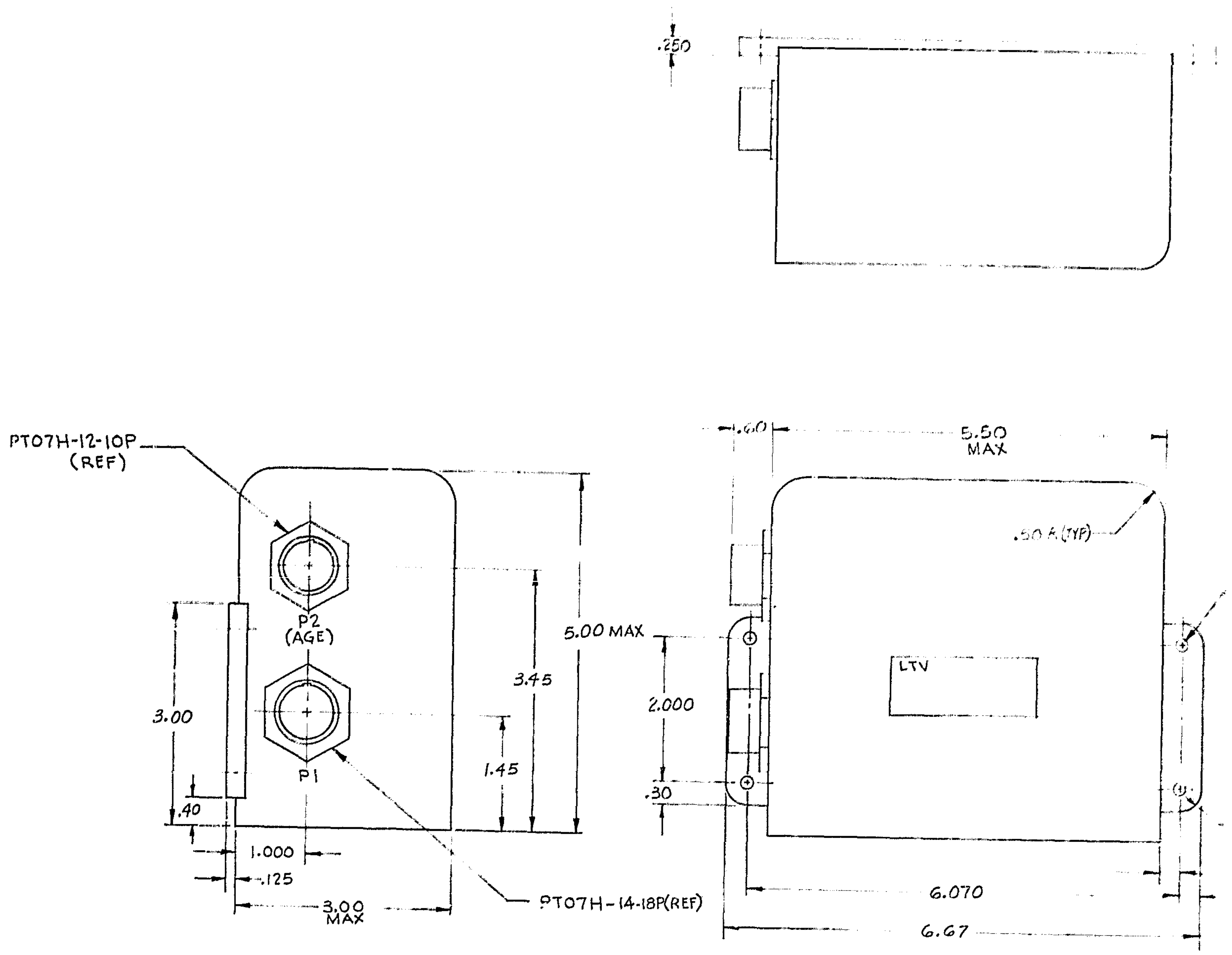

QTY PER MAJOR ASSY	NEXT AS
	N100-0

1

4 3 2 1

REVISIONS

ZONE	LTR	DESCRIPTION	DATE	APPROVED

D

C

B

A

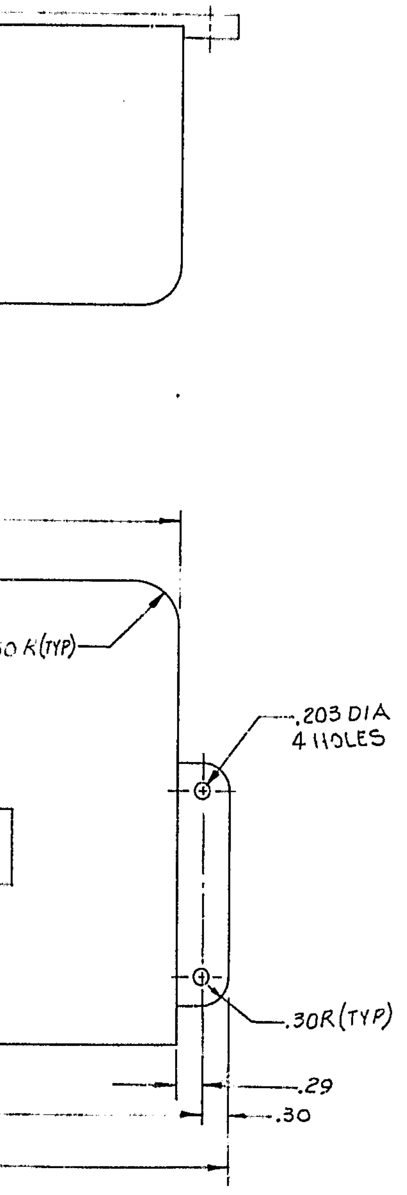

N100-00920

						ZONE	ITEM	CODE IDENT NO.	PART OR IDENTIFYING NO.	NOMENCLATURE OR DESCRIPTION	MATERIAL AND FINISH OR NOTE OR REF DES.
							2				
							1				
QUANTITY REQUIRED											

LIST OF MATERIAL OR PARTS LIST

QTY PER MAJOR ASSY	NEXT ASSEMBLY	USED ON
	N100-00000	N100-00000

UNLESS OTHERWISE SPECIFIED
TOLERANCES ON:
2 PLACE DEC ±.02 3 PLACE DEC ±.010
ANGLES
MACHINED ±0° 15' FORMED ±1° SHEARED ±0° 30'
HOLE TOLERANCE PER AND 10387
SURFACE ROUGHNESS PER MIL-STD-10
MACHINED SURFACE FINISH 125√
DIMENSIONING AND TOLERANCING PER MIL-STD-8
ECCENTRICITY BETWEEN ANY DIA(S) ON THE SAME CENTERLINE SHALL NOT EXCEED .010 TOTAL INDICATOR READING
ALL DIM. ARE IN INCHES & INCLUDE APPLIED FINISH
WELD SYMBOLS PER MIL-STD-19
RIVET CODE PER NAS 523
THREADS PER MIL-S-7742
MARK PER MIL-STD-130
REMOVE ALL BURRS AND SHARP EDGES
SPECIFICATIONS:

PROJ ENGR		
COMP ENGR		
MAT'L/PROC-ENGR		
STRUCT / WTS		
GROUP APP	B. Jerome	3/25/66
CHECKED BY	B. Powell	3/25/66
DRAWN BY	Cartwright	3-25-66
ENGR GROUP	0-71100	

LTV RESEARCH CENTER

CASE OUTLINE
β-γ SPECTROMETER

SIZE: D
CODE IDENT NO.: 1181
N100-00920
SCALE: FULL
REV.
SHEET

REVISIONS				
ZONE	LTR	DESCRIPTION	DATE	APPROVED

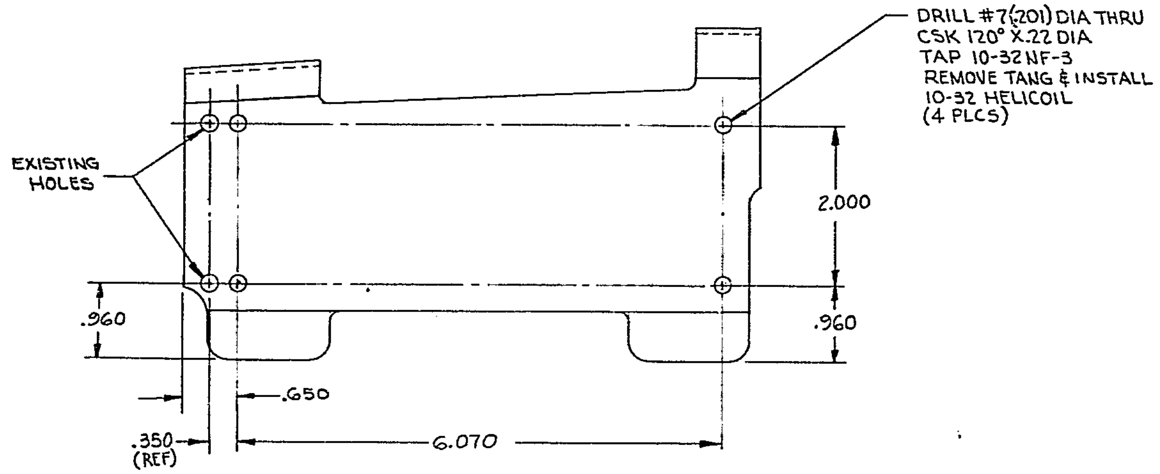

QUANTITY REQUIRED					ZONE	ITEM	CODE IDENT NO.	PART OR IDENTIFYING NO.	NOMENCLATURE OR DESCRIPTION	MATERIAL AND FINISH OR NOTE OR REF DES
						2				
						1				

LIST OF MATERIAL OR PARTS LIST

QTY PER MAJOR ASSY	NEXT ASSEMBLY	USED ON

UNLESS OTHERWISE SPECIFIED
TOLERANCES ON:
2 PLACE DEC ±.02 3 PLACE DEC ±.010
ANGLES
MACHINED ±0° 15' FORMED ±1° SHEARED ±0° 30'
HOLE TOLERANCE PER AND 10387
SURFACE ROUGHNESS PER MIL-STD-10
MACHINED SURFACE FINISH 125✓
DIMENSIONING AND TOLERANCING PER MIL-STD-8
ECCENTRICITY BETWEEN ANY DIA(S) ON THE SAME CENTERLINE SHALL NOT EXCEED .010 TOTAL INDICATOR READING
ALL DIM ARE IN INCHES & INCLUDE APPLIED FINISH
WELD SYMBOLS PER MIL-STD-19
RIVET CODE PER NAS 523
THREADS PER MIL-S-7742
MARK PER MIL-STD-130
REMOVE ALL BURRS AND SHARP EDGES
SPECIFICATIONS:

PROJ ENGR		
COMP ENGR		
MAT'L/PROC-ENGR		
STRUCT / WTS		
GROUP APP	E. D. Sommer	4-20/66
CHECKED BY	[illegible]	4-20-66
DRAWN BY	Cartwright	4-19-66
ENGR GROUP	0-71100	

LTV RESEARCH CENTER

BRACKET-MTG
MODIFICATION

SIZE C
CODE IDENT NO. 11817
N100-00930
SCALE: 1/1
REV.
SHEET

N100-00930

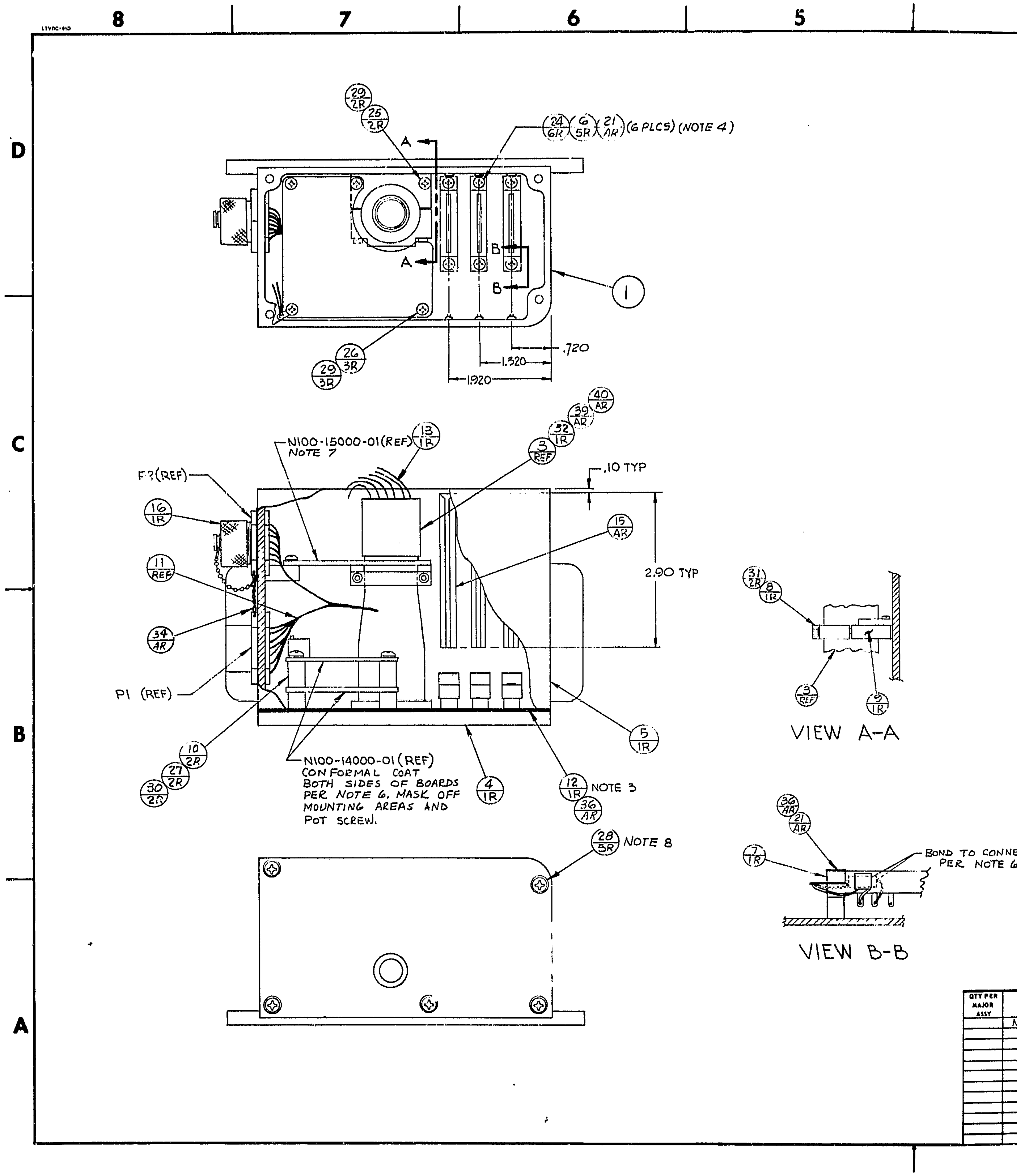

LTVRC-81D
8
7
6
5
D
C
B
A
29 2R
25 2R
A
A
24 6R
6 5R
21 AR
(6 PLCS) (NOTE 4)
B
B
1
26 3R
29 3R
.720
1.320
1.920
40 AR
39 AR
32 1R
3 REF
N100-15000-01 (REF)
NOTE 7
13 1R
F?(REF)
.10 TYP
16 1R
15 AR
11 REF
2.90 TYP
34 AR
P1 (REF)
5 1R
10 2R
27 2R
30 2R
N100-14000-01 (REF)
CONFORMAL COAT
BOTH SIDES OF BOARDS
PER NOTE 6. MASK OFF
MOUNTING AREAS AND
POT SCREW.
4 1R
12 1R
NOTE 3
36 AR
28 5R
NOTE 8
31 2R
8 1R
3 REF
9 1R
VIEW A-A
36 AR
21 AR
7 1R
BOND TO CONNE
PER NOTE 6
VIEW B-B
QTY PER MAJOR ASSY
N

1

4 3 2 1

NOTES

1. ASSEMBLE & SOLDER PER NASA SPEC NPC 200-4
2. BARRY CONTROLS, DIV OF BARRY-WRIGHT INC, WATERTOWN, MASS.
3. BOND ITEM 12 TO ITEM 4 USING ITEM 36
4. BOND ITEM 21 TO TOP OF ITEMS 6 & 7 AFTER INSTALLATION OF SPACERS.
5. STRING TIE ITEM 11 TO ITEM 3 AND CONNECTORS J101, J102 & J103 USING ITEM 20
6. CONFORMAL COAT AND SECURE COMPONENTS PER 408-00060.
7. CONFORMAL COAT BOTH SIDES OF BOARD AND SECURE COMPONENTS AND WIRES ON PE5400 POWER SUPPLY PER 408-00060. MASK OFF MOUNTING AREAS AND TACK SECURE PE5900 PWR SUPPLY IN THREE PLACES
8. TORQUE SCREWS UNTIL RUBBER COMPRESSES OUT AROUND ENTIRE MOUNTING PERIPHERY.

REVISIONS

ZONE	LTR	DESCRIPTION	DATE	APPROVED
	A	1. ADDED ITEMS 16 & 34 TO L/M & F/D 2. ITEM 24 WAS AN507-632R10 IN L/M 3. ITEM 27 WAS NAS601-16P	8-19-66 8-31-66	DRAWN CARTWRIGHT jhj
A5	B	ADDED HIDDEN VIEW OF CAPACITOR.	1-12-67 1/24/67	DWG BY S. Lowe CHK BY Rb. Bagwell

D

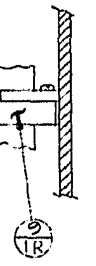

A-A

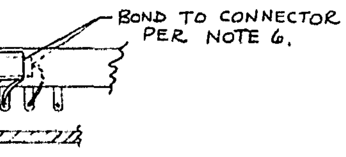

B-B

C

QUANTITY REQUIRED -01	ZONE	ITEM	CODE IDENT NO.	PART OR IDENTIFYING NO.	NOMENCLATURE OR DESCRIPTION	MATERIAL AND FINISH OR NOTE OR REF DES
A1		40		GRADE C	SEALANT	MIL-S-22473
A1		39		GRADE N, FM-R, GRN	PRIMER	MIL-S-22473
		38				
		37				
AR		36		RTV102	SEALANT	GENERAL ELECTRIC, WATERFORD, N.Y.
		35				
AR		34		24 AWG	WIRE, SAFETY	QQ-W-423
		33				
1		32		MS9021-019	O'RING	
2		31		NAS1352C04-12	SCREW	
2		30		NAS620-6	WASHER, FLAT	
5		29		NAS620-4	WASHER, FLAT	
5		28		NAS601-9P	SCREW	
2		27		AN526-14	SCREW	
3		26		NAS600-6P	SCREW	
2		25		NAS600-8P	SCREW	
6		24		AN507-440R10	SCREW	
		23				
		22				
AR		21		CHR-700	SILICONE RUBBER	LONGHORN GASKET, DALLAS, TEX
AR		20		TYPE P, WAXED, CL 2 NAT	TWINE	MIL-T-713
		19				
		18				
		17				
1		16		10-101964-123	CAP, DUST	BENDIX SCINTILLA DIV. SIDNEY, N.Y.
18		15		20150-1	SLIDE, CARD	NOTE 2 (LENGTH IN INCHES)
		14				
1		13		N100-10300-01	INTERCONNECT ASSY.	
1		12		N100-10015-02	GASKET	
REF		11		N100-10200-01	WIRE HARNESS	
2		10		N100-10016-06	SPACER	
1		9		N100-10016-05	CLAMP	
1		8		N100-10016-04	CLAMP	
1		7		N100-10016-03	SPACER	
5		6		N100-10016-02	SPACER	
1		5		N100-10004-01	CASE	
1		4		N100-10002-01	COVER, BOTTOM	
REF		3		N100-10001-01	TUBE ASSY	CALL OUT ON DWG N100-10300
		2				
		1		-01	ASSY	

LIST OF MATERIAL OR PARTS LIST

B

N100-10000 B

QTY PER MAJOR ASSY	NEXT ASSEMBLY	USED ON
	N100-00000	N100-00000

UNLESS OTHERWISE SPECIFIED
TOLERANCES ON:
2 PLACE DEC ±.02
3 PLACE DEC ±.010
ANGLES
MACHINED ±0° 15'
FORMED ±1°
SHEARED ±0° 30'
HOLE TOLERANCE PER AND 10387
SURFACE ROUGHNESS PER MIL-STD-10
MACHINED SURFACE FINISH 125√
DIMENSIONING AND TOLERANCING PER MIL-STD-8
ECCENTRICITY BETWEEN ANY DIA(S) ON THE SAME CENTERLINE SHALL NOT EXCEED .010 TOTAL INDICATOR READING
ALL DIM. ARE IN INCHES & INCLUDE APPLIED FINISH
WELD SYMBOLS PER MIL-STD-19
RIVET CODE PER NAS 523
THREADS PER MIL-S-7742
MARK PER MIL-STD-130
REMOVE ALL BURRS AND SHARP EDGES
SPECIFICATIONS:

PROJ ENGR		
COMP ENGR		
MAT'L/PROC ENGR		
STRUCT / WTS		
GROUP APP	E. J. Farmer	8/1/66
CHECKED BY	R. Bagwell	8/1/66
DRAWN BY	CARTWRIGHT	8-1-66
ENGR GROUP	0-71100	

LTV RESEARCH CENTER

COMPONENT ASSY

SIZE D
CODE IDENT NO. 11817
N100-10000
SCALE: 1/1
REV. B
SHEET

A

2

LTVRC-810

8 7 6 5 4

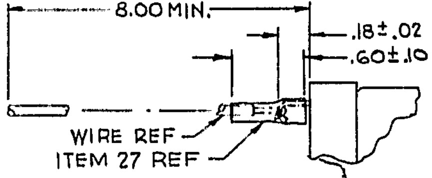

TYPICAL WIRE INSTL
FOR PINS 4,5,6,7,8 ON ITEM 19

DETAIL A

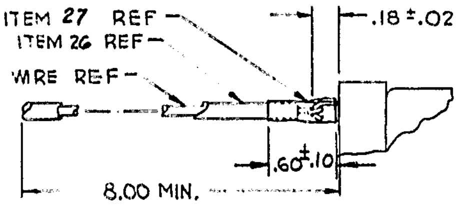

TYPICAL WIRE INSTL
FOR PINS 1,2,3,9,10,11,12 & SHIELD WIRE
ON ITEM 19

DETAIL B

TABLE I

PIN NO. (ITEM 19)	WIRE COLOR
1	VIOLET
2	BLK
3	GRAY
4	VIOLET
5	BLK
6	GRAY
7	VIOLET
8	BLK
9	GRAY
10	VIOLET
11	BLK
12	GRAY
SHIELD	BLK

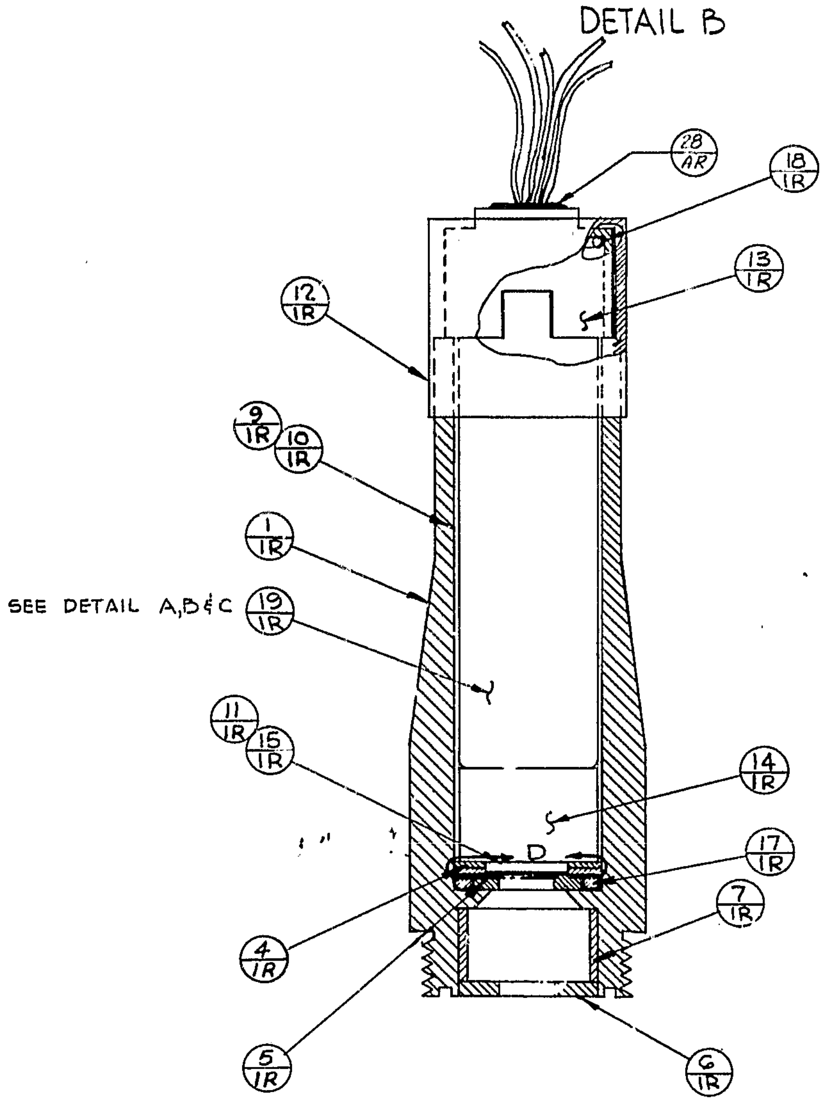

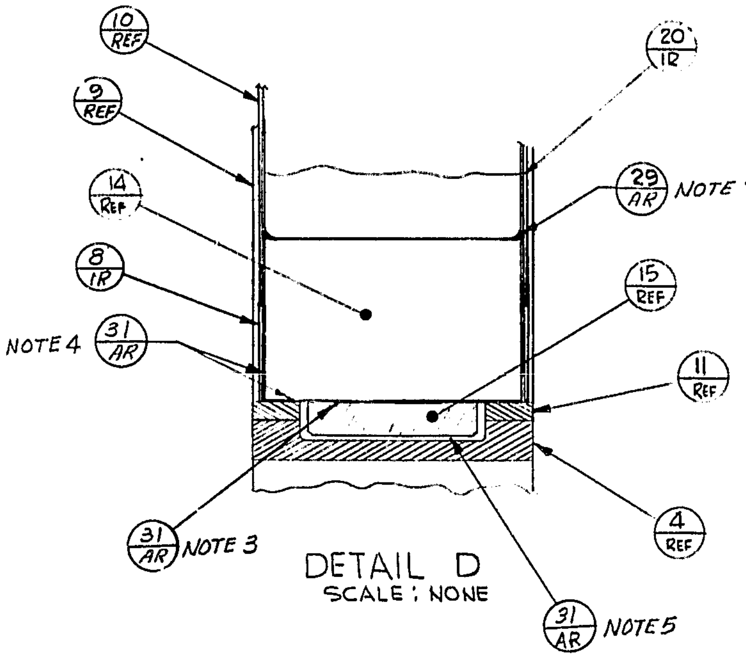

DETAIL D
SCALE: NONE

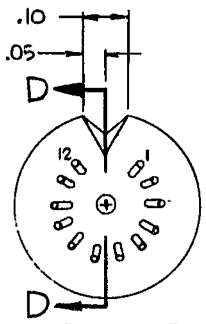

DETAIL C
BOTTOM VIEW OF ITEM 19

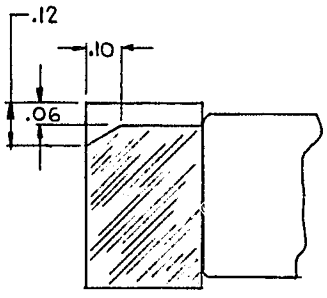

SECT D-D

QTY PER MAJOR ASSY	NEXT
	N100-

1

4 3 2 1

NOTES:
1. SOLDER PER NPC 200-4
2. BOND ITEM 14 TO ITEM 19 USING ITEM 29
3. BOND ITEM 15 TO ITEM 14 USING ITEM 30 (OMIT CATAYLST)
4. COAT ITEM 14 AROUND CIRCUMFENCE AND ON BOTTOM UP TO ITEM 15 USING ITEM 31
5. COAT INSIDE OF ITEM 4 WITH ITEM 31

REVISIONS

ZONE	LTR	DESCRIPTION	DATE	APPROVED

D

C

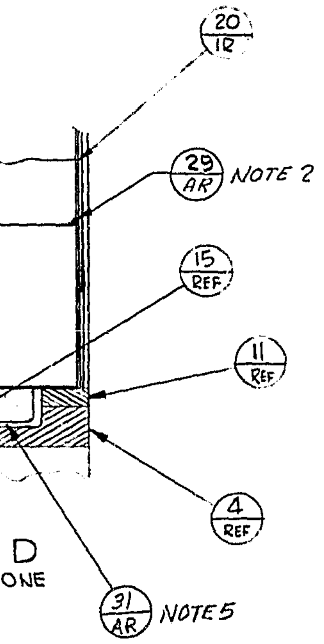

B

QUANTITY REQUIRED -01	ZONE	ITEM	CODE IDENT NO.	PART OR IDENTIFYING NO.	NOMENCLATURE OR DESCRIPTION	MATERIAL AND FINISH OR NOTE OR REF DES
AR		31		COATING	WHITE, REFLECTIVE	PILOT CHEMICAL INC. WATERTOWN, MASS
AR		30		EPOXY	PILOT BONDING	PILOT CHEMICAL INC. WATERTOWN, MASS
AR		29		FG5	LENS BOND	SUMMERS LAB INC. FT. WASHINGTON, PA.
AR		28		RTV 732	SEALANT	DOW CHEMICAL ; MIDLAND, MICH.
AR		27		RNF-100-18T	SHRINKFIT TUBING	RAYCLAD TUBE INC. REDWOOD CITY, CALI
AR		26		STT-16	INSULATION, TEFLON	ICORE INC., SUNNYVALE, CALIF
AR		25		E26 BLK	WIRE	MIL-W-16878
AR		24		E26 GRAY	WIRE	MIL-W-16878
AR		23		E26 VIOLET	WIRE	MIL-W-16878
		22				
		21				
1		20		SMALL - COM'L	FINGER COT	DAVID'S GLOVES, FT. WORTH, TEX.
1		19		RCA 4460	TUBE	RADIO CORP OF AMERICA, HARRISON, N.J.
1		18		MS9021-019	O'RING	
1		17		MS9021-018	O'RING	
		16				
1		15		N100-10017-02	PLASTIC	
1		14		N100-10017-01	CRYSTAL	
1		13		N100-10016-07	INSULATOR	
1		12		N100-10016-01	CAP	
1		11		N100-10015-03	GASKET	
1		10		N100-10010-03	SHIELD	
1		9		N100-10010-02	INSULATOR	
1		8		N100-10010-01	SPACER	
1		7		N100-10008-01	SPACER	
1		6		N100-10007-02	COLLIMATOR	
1		5		N100-10007-01	COLLIMATOR	
1		4		N100-10006-01	WINDOW	
1		3		N100-10005-01	SHIELD	
		2				
		1		-01	TUBE ASSY	

LIST OF MATERIAL OR PARTS LIST

N100-10001

QTY PER MAJOR ASSY	NEXT ASSEMBLY	USED ON
	N100-10300	N100-00000

UNLESS OTHERWISE SPECIFIED
TOLERANCES ON:
2 PLACE DEC ±.02
3 PLACE DEC ±.010
ANGLES
MACHINED ±0° 15'
FORMED ±1°
SHEARED ±0° 30'
HOLE TOLERANCE PER AND 10387
SURFACE ROUGHNESS PER MIL-STD-10
125✓ MACHINED SURFACE FINISH
DIMENSIONING AND TOLERANCING PER MIL-STD-8
ECCENTRICITY BETWEEN ANY DIA(S) ON THE SAME CENTERLINE SHALL NOT EXCEED .010 TOTAL INDICATOR READING
ALL DIM. ARE IN INCHES & INCLUDE APPLIED FINISH
WELD SYMBOLS PER MIL-STD-19
RIVET CODE PER NAS 523
THREADS PER MIL-S-7742
MARK PER MIL-STD-130
REMOVE ALL BURRS AND SHARP EDGES
SPECIFICATIONS:

PROJ ENGR		
COMP ENGR		
MAT'L PROC ENGR		
STRUCT / WTS		
GROUP APP		8/19/66
CHECKED BY		8/19/66
DRAWN BY	CARTWRIGHT	7-14-66
ENGR GROUP	0-71100	

LTV RESEARCH CENTER

PHOTOMULTIPLIER ASSY

A

SIZE D
CODE IDENT NO. 11817
N100-10001
SCALE: 2/1
REV.
SHEET

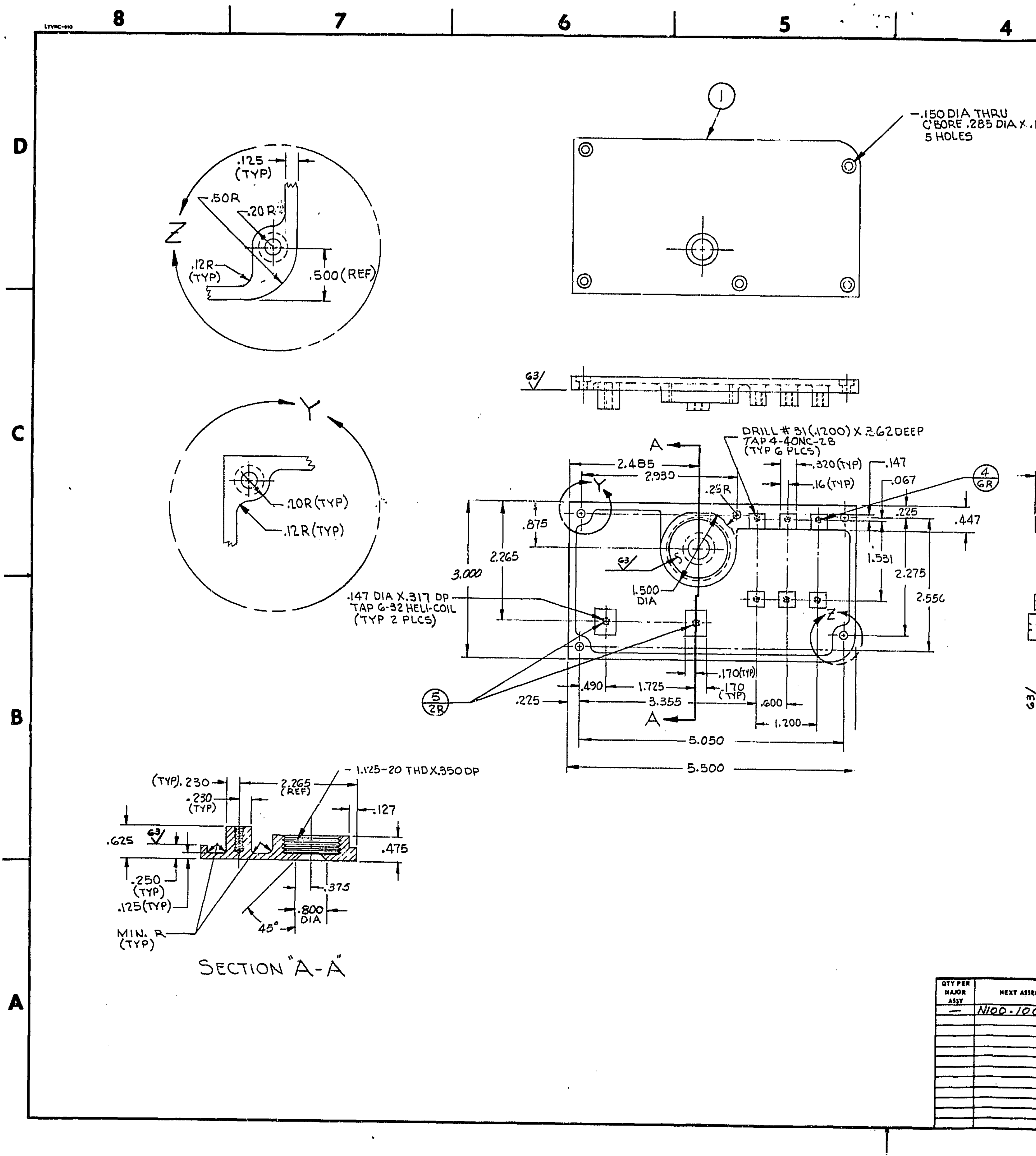
LTVRC-010
8
7
6
5
4
D
C
B
A
①
-.150 DIA THRU
C'BORE .285 DIA X .
5 HOLES
.125
(TYP)
.50R
.20R
Z
.12R
(TYP)
.500(REF)
63
Y
.10R(TYP)
.12R(TYP)
A
DRILL #31(.1200) X .262 DEEP
TAP 4-40NC-2B
(TYP 6 PLCS)
2.485
2.930
.25R
.320(TYP)
.16(TYP)
.147
.067
④
6R
.225
.447
.875
2.265
3.000
1.531
2.275
2.556
63
1.500
DIA
.147 DIA X.317 DP
TAP 6-32 HELI-COIL
(TYP 2 PLCS)
Z
.170(TYP)
.170
(TYP)
.490
1.725
3.355
.600
1.200
⑤
2R
.225
A
5.050
5.500
63
(TYP).230
.230
(TYP)
2.265
(REF)
- 1.125-20 THD X.350 DP
.127
.625
.475
.250
(TYP)
.125(TYP)
.375
.800
DIA
45°
MIN. R
(TYP)
SECTION "A-A"
QTY PER MAJOR ASSY
NEXT ASSE
—
N100-10

1

NOTES:
1. GLASS PEEN PER AERO SPEC 13-401
2. BLEACH ALODINE 1200S PER SPEC CVA9-18
3. INSTALL HELICOILS AFTER FINISH

REVISIONS

ZONE	LTR	DESCRIPTION	DATE	APPROVED
	A	INCREASED HOLE DIA TO .800 (WAS .600.)	1-19-67 1/24/67	DWG BY S Lowe CHK BY RB Bagwell

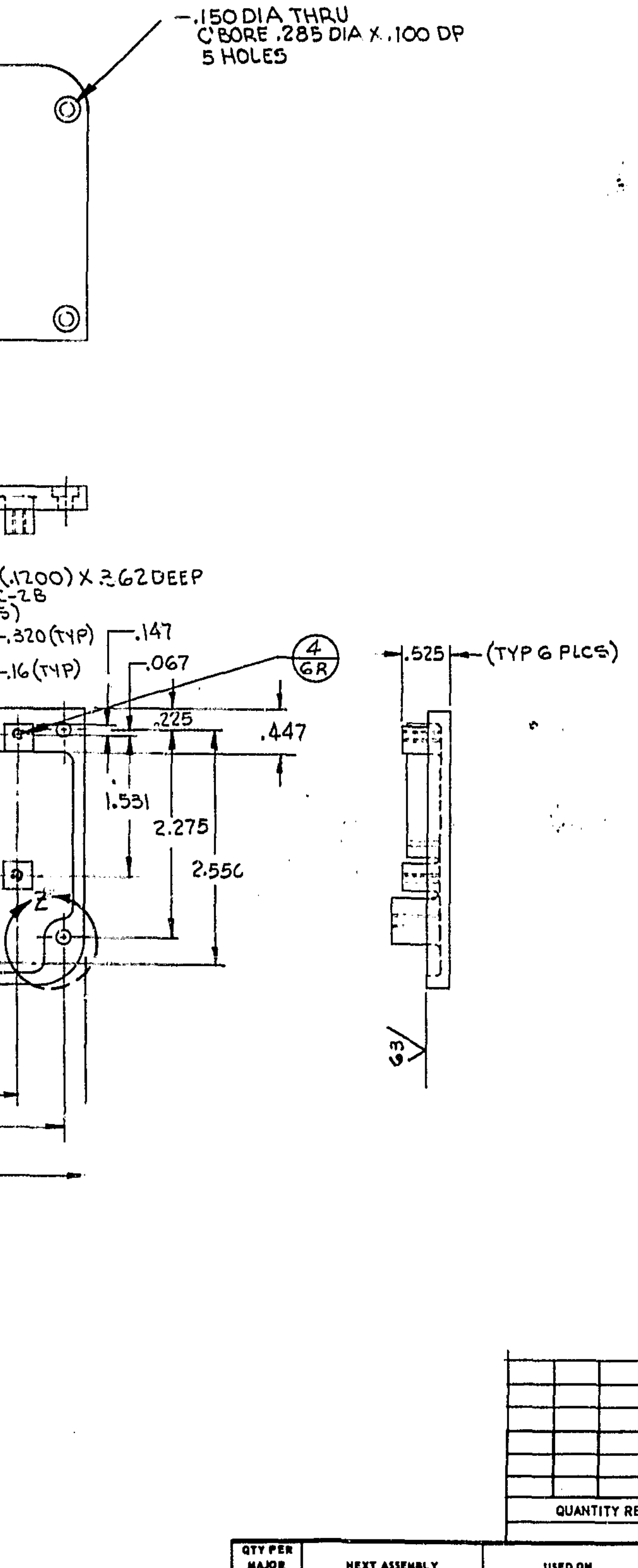

QUANTITY REQUIRED				-01	ZONE	ITEM	CODE IDENT NO.	PART OR IDENTIFYING NO.	NOMENCLATURE OR DESCRIPTION	MATERIAL AND FINISH OR NOTE OR REF DES
				2		5		3585-06CN-0207	HELICOIL	NOTE 3
				6		4		3585-04CN-0224	HELICOIL	NOTE 3
						3				
						2				
				1		1		-01	COVER	7075-T6 AL NOTE 1&2

LIST OF MATERIAL OR PARTS LIST

QTY PER MAJOR ASSY	NEXT ASSEMBLY	USED ON
—	N100-10000	N100-00000

UNLESS OTHERWISE SPECIFIED
TOLERANCES ON:
2 PLACE DEC ±.02 3 PLACE DEC ±.010
ANGLES
MACHINED ±0° 15' FORMED ±1° SHEARED ±0° 30'
HOLE TOLERANCE PER AND 10387
SURFACE ROUGHNESS PER MIL-STD-10
MACHINED SURFACE FINISH 125✓
DIMENSIONING AND TOLERANCING PER MIL-STD-8
ECCENTRICITY BETWEEN ANY DIA(S) ON THE SAME CENTERLINE SHALL NOT EXCEED .010 TOTAL INDICATOR READING
ALL DIM. ARE IN INCHES & INCLUDE APPLIED FINISH
WELD SYMBOLS PER MIL-STD-19
RIVET CODE PER NAS 523
THREADS PER MIL-S-7742
MARK PER MIL-STD-130
REMOVE ALL BURRS AND SHARP EDGES
SPECIFICATIONS:

PROJ ENGR		
COMP ENGR		
MAT'L/PROC ENGR		
STRUCT / WTS		
GROUP APP	B J Garner	5-25-66
CHECKED BY	RB Bagwell	5/21/66
DRAWN BY	Cartwright	4-7-66
ENGR GROUP	0-71100	

LTV RESEARCH CENTER

COVER - BOTTOM
SPECTROMETER

SIZE D
CODE IDENT NO. 11817
N100-10002
SCALE: 1/1
REV. A
SHEET

N100-10002 A

2

8	7	6	5	4

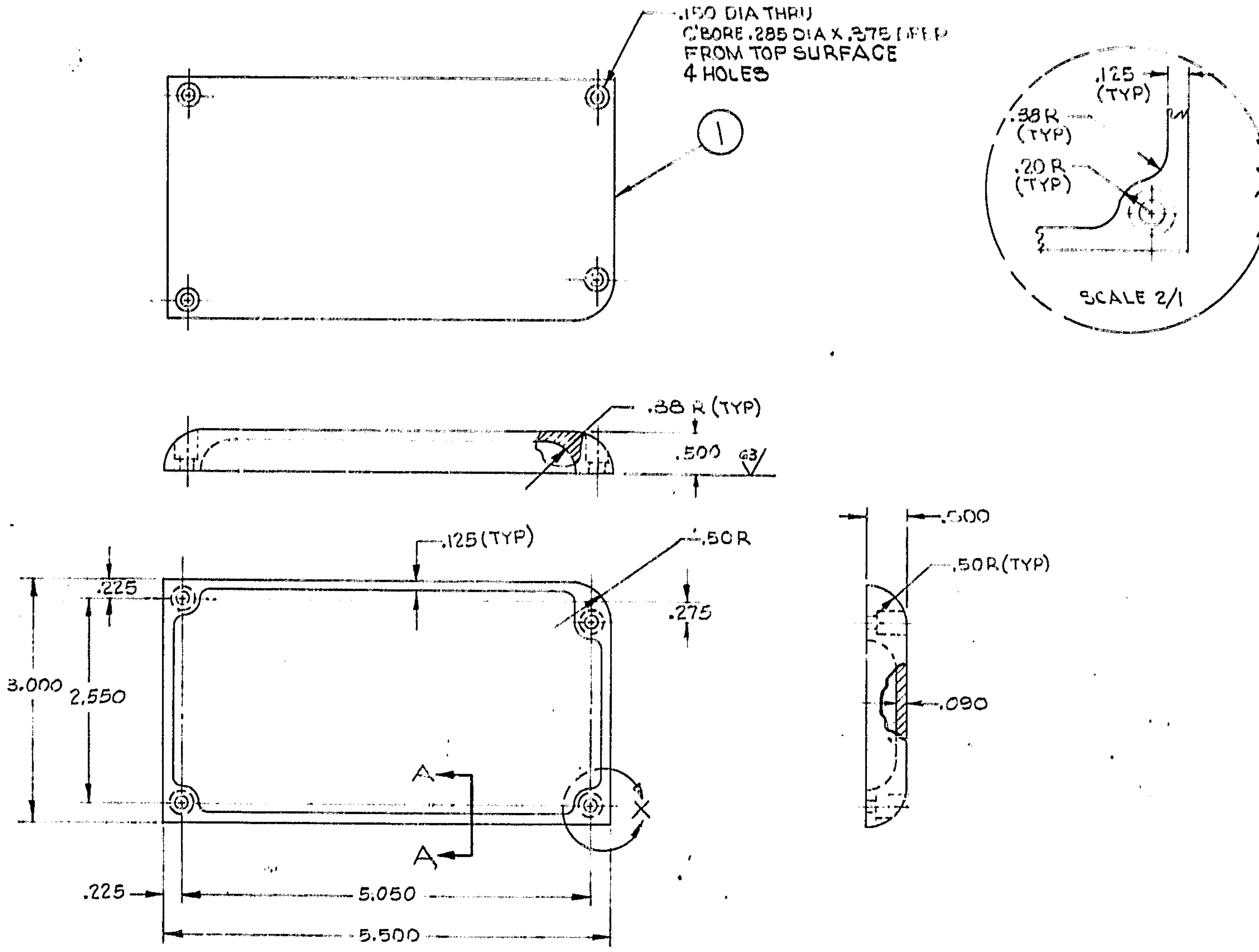

QTY PER MAJOR ASSY	NEXT A
	N100-

4 3 2 1

NOTES:
1. GLASS PEEN PER AERO SPEC 13-401
2. BLEACH ALODINE 1200S PER CVA9-18

ZONE	LTR	REVISIONS DESCRIPTION	DATE	APPROVED

D

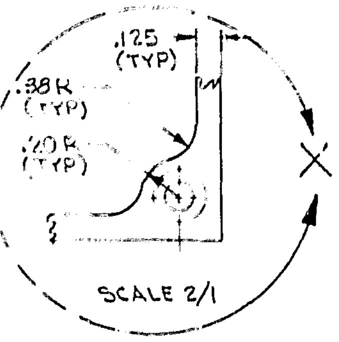

C

(TYP)

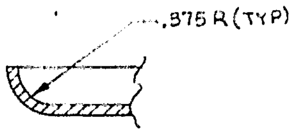

SECTION A-A

B

N100-10003

						2				
						1		-01	COVER	7075-T6 AL SEE NOTE 1 & 2
				-01	ZONE	ITEM	CODE IDENT NO.	PART OR IDENTIFYING NO.	NOMENCLATURE OR DESCRIPTION	MATERIAL AND FINISH OR NOTE OR REF DES
QUANTITY REQUIRED										

LIST OF MATERIAL OR PARTS LIST

QTY PER MAJOR ASSY	NEXT ASSEMBLY	USED ON
	N100-00000	N100-00000

UNLESS OTHERWISE SPECIFIED
TOLERANCES ON
2 PLACE DEC ±.02
3 PLACE DEC ±.010
ANGLES
MACHINED ±0° 15'
FORMED ±1°
SHEARED ±0° 30'
HOLE TOLERANCE PER AND 10387
SURFACE ROUGHNESS PER MIL-STD-10
MACHINED SURFACE FINISH 125✓
DIMENSIONING AND TOLERANCING PER MIL-STD-8
ECCENTRICITY BETWEEN ANY DIA(S) ON THE SAME CENTERLINE SHALL NOT EXCEED .010 TOTAL INDICATOR READING
ALL DIM. ARE IN INCHES & INCLUDE APPLIED FINISH
WELD SYMBOLS PER MIL-STD-19
RIVET CODE PER NAS 523
THREADS PER MIL-S-7742
MARK PER MIL-STD-130
REMOVE ALL BURRS AND SHARP EDGES
SPECIFICATIONS:

PROJ ENGR		
COMP ENGR		
MAT'L/PROC ENGR		
STRUCT / WTS		
GROUP APP	B J Gesner	4-26-66
CHECKED BY	R H Bagnell	4/25/66
DRAWN BY	Cartwright	4-18-66
ENGR GROUP	0-71100	

LTV RESEARCH CENTER

COVER-TOP
SPECTROMETER

SIZE D
CODE IDENT NO. 11817
N100-10003
SCALE: 1/1
REV.
SHEET

A

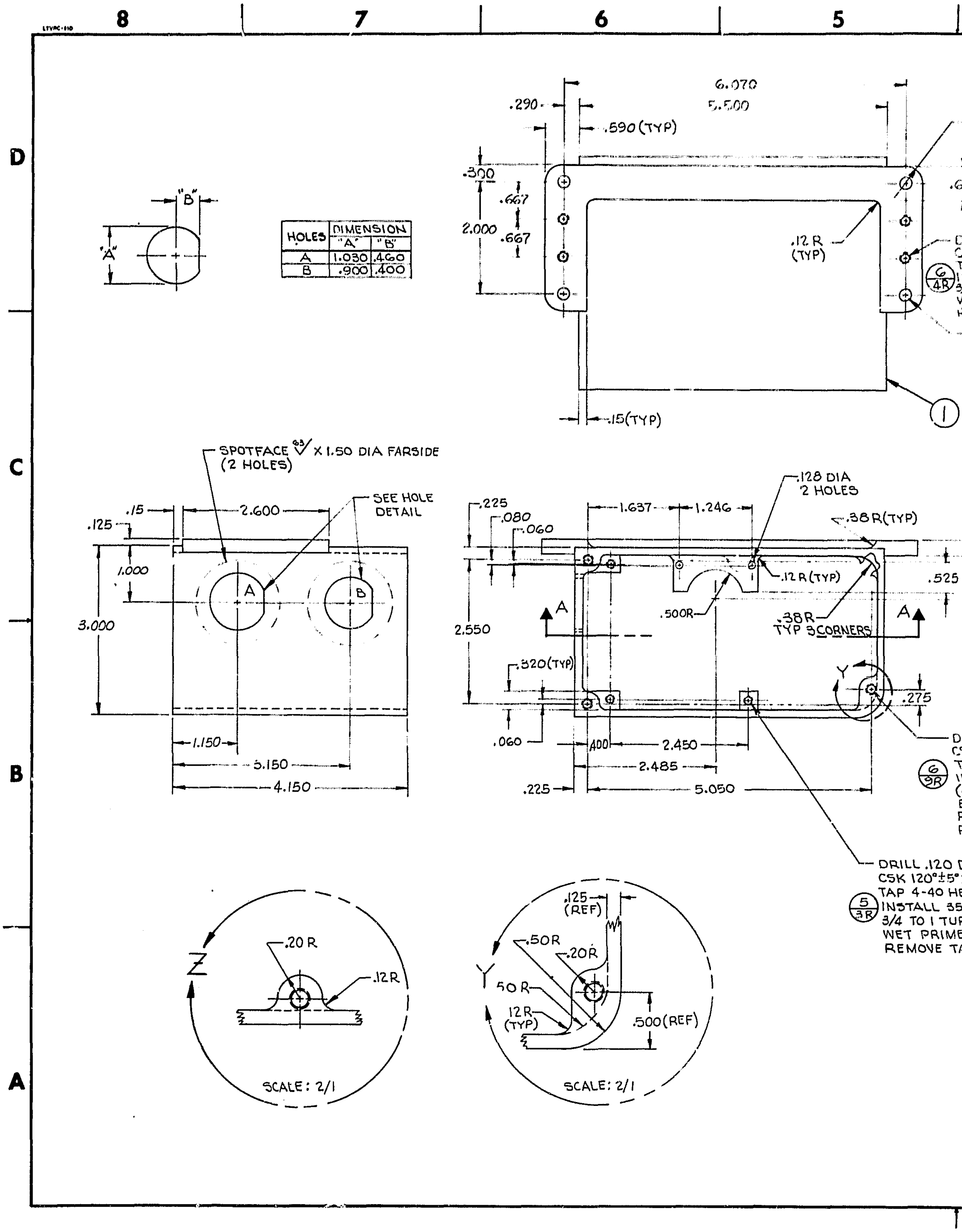

HOLES	DIMENSION "A"	DIMENSION "B"
A	1.030	.460
B	.900	.400

1

NOTES:
1. GLASS PEEN PER AERO SPEC 13-401
2. BLEACH ALODINE 1200S PER SPEC CVA9-18
3. INSTALL HELICOILS AFTER FINISH

ZONE	LTR	REVISIONS DESCRIPTION	DATE	APPROVED

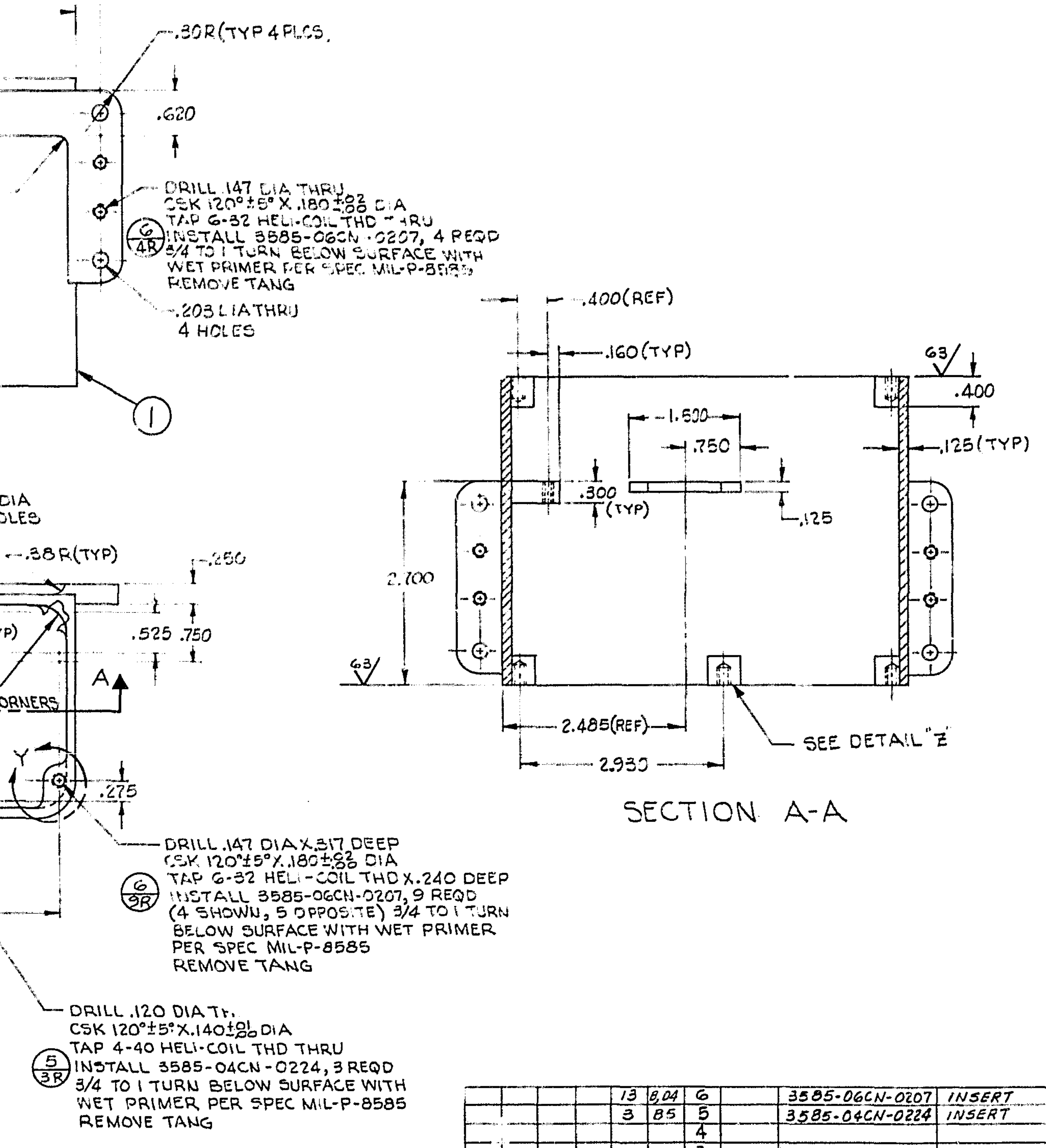

SECTION A-A

N100-10004

				13	B,D4	6		3585-06CN-0207	INSERT	NOTE 3
				3	B5	5		3585-04CN-0224	INSERT	NOTE 3
						4				
						3				
						2				
						1		-01	CASE	7075-T6 AL NOTE 1 & 2
QUANTITY REQUIRED				-01	ZONE	ITEM	CODE IDENT NO.	PART OR IDENTIFYING NO.	NOMENCLATURE OR DESCRIPTION	MATERIAL AND FINISH OR NOTE OR REF DES

LIST OF MATERIAL OR PARTS LIST

QTY PER MAJOR ASSY	NEXT ASSEMBLY	USED ON
	N100-10000	N100-00000

UNLESS OTHERWISE SPECIFIED
TOLERANCES ON:
2 PLACE DEC ±.02 1 PLACE DEC ±.010
ANGLES
MACHINED ±0° 15' FORMED ±1° SHEARED ±0° 30'
HOLE TOLERANCE PER ANA 10387
SURFACE ROUGHNESS PER MIL-STD-10
MACHINED SURFACE FINISH 125✓
DIMENSIONING AND TOLERANCING PER MIL-STD-8
ECCENTRICITY BETWEEN ANY DIA(S) ON THE SAME CENTERLINE SHALL NOT EXCEED .010 TOTAL INDICATOR READING
ALL DIM. ARE IN INCHES & INCLUDE APPLIED FINISH
WELD SYMBOLS PER MIL-STD-19
RIVET CODE PER NAS 523
THREADS PER MIL-S-7742
MARK PER MIL-STD-130
REMOVE ALL BURRS AND SHARP EDGES
SPECIFICATIONS:

PROJ ENGR		
COMP ENGR		
MAT'L/PROC ENGR		
STRUCT / WTS		
GROUP APP	B.D. Fr...	5/25/66
CHECKED BY		5/20/66
DRAWN BY	CARTWRIGHT	5-13-66
ENGR GROUP	0-71100	

LTV RESEARCH CENTER

CASE
SPECTROMETER

SIZE	CODE IDENT NO.	
D	11817	N100-10004
SCALE: FULL	REV.	SHEET

NOTES:
1. MATL: TANTALUM; MAY BE PURCHASED FROM RYERSON STEEL, CHICAGO, ILL.

REVISIONS

ZONE	LTR	DESCRIPTION	DATE	APPROVED
	A	INCORPORATED EO. NO N100.2	1-3-67 1/24/67	DWG BY S. Lowe CHK BY

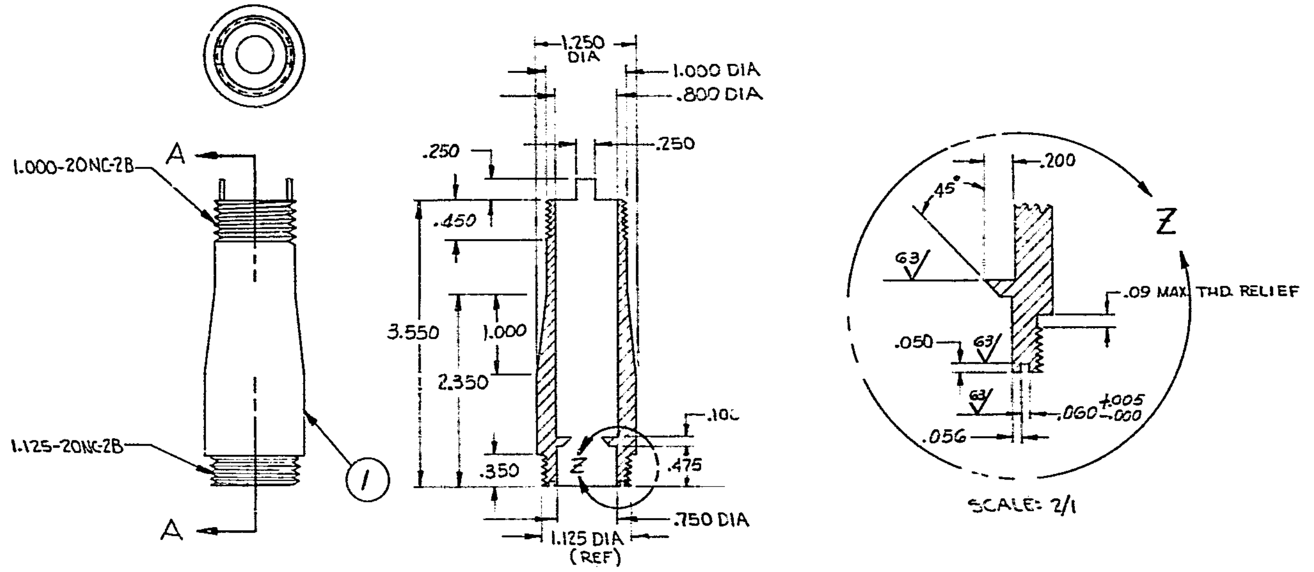

LIST OF MATERIAL OR PARTS LIST

QUANTITY REQUIRED				ZONE	ITEM	CODE IDENT NO.	PART OR IDENTIFYING NO.	NOMENCLATURE OR DESCRIPTION	MATERIAL AND FINISH OR NOTE OR REF DES
					2				
					1		-01	SHIELD	TANTALUM - ROD

QTY PER MAJOR ASSY	NEXT ASSEMBLY	USED ON
	N100-10001	N100-00000

UNLESS OTHERWISE SPECIFIED
TOLERANCES ON
2 PLACE DEC ±.03 3 PLACE DEC ±.010
ANGLES
MACHINED ±0°15' FORMED ±1° SHEARED ±0°30'
HOLE TOLERANCE PER AND 10,387
SURFACE ROUGHNESS PER MIL-STD-10
MACHINED SURFACE FINISH 125√
DIMENSIONING AND TOLERANCING PER MIL-STD-8
ECCENTRICITY BETWEEN ANY DIA(S) ON THE SAME CENTERLINE SHALL NOT EXCEED .010 TOTAL INDICATOR READING
ALL DIM. ARE IN INCHES & INCLUDE APPLIED FINISH
WELD SYMBOLS PER MIL-STD-19
RIVET CODE PER NAS 523
THREADS PER MIL-S-7742
MARK PER MIL-STD-130
REMOVE ALL BURRS AND SHARP EDGES
SPECIFICATIONS

PROJ ENGR		
COMP ENGR		
MAT'L PROC ENGR		
STRUCT / WTS		
GROUP APP		5/26/66
CHECKED BY		5/23/66
DRAWN BY	Cartwright	4-9-66
ENGR GROUP	0-71100	

LTV RESEARCH CENTER

SHIELD
DETECTOR ASSEMBLY

SIZE	CODE IDENT NO.	
C	11817	N100-10005
SCALE: FULL	REV. A	SHEET

N100-10005 A

NOTES:
1. BLEACH ALODINE 1200S PER SPEC CVA9-18

ZONE	LTR	REVISIONS DESCRIPTION	DATE	APPROVED

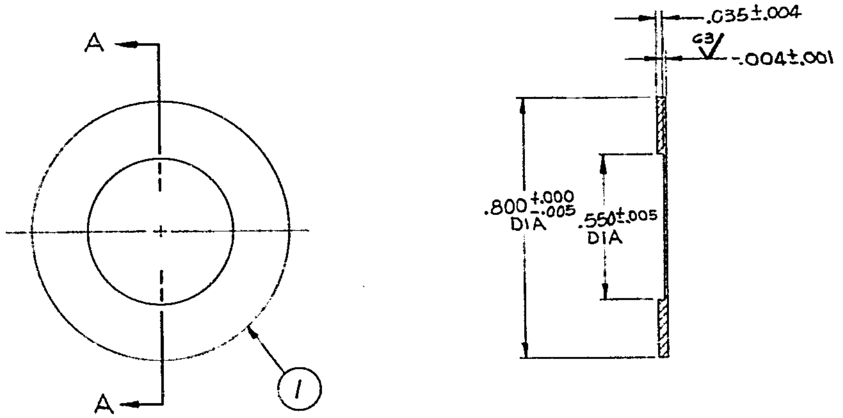

N100-10006

				2					
				1		-01	WINDOW	7075-T6 AL	NOTE 1
QUANTITY REQUIRED		-01	ZONE	ITEM	CODE IDENT NO.	PART OR IDENTIFYING NO.	NOMENCLATURE OR DESCRIPTION	MATERIAL AND FINISH OR NOTE OR REF DES	

LIST OF MATERIAL OR PARTS LIST

QTY PER MAJOR ASSY	NEXT ASSEMBLY	USED ON
	N100-10001	N100-00000

UNLESS OTHERWISE SPECIFIED
TOLERANCES ON
2 PLACE DEC ±.02
3 PLACE DEC ±.010
ANGLES
MACHINED ±0° 15'
FORMED ±1°
SHEARED ±0° 30'
HOLE TOLERANCE PER AND 10387
SURFACE ROUGHNESS PER MIL-STD-10
MACHINED SURFACE FINISH 125
DIMENSIONING AND TOLERANCING PER MIL-STD-8
ECCENTRICITY BETWEEN ANY DIA(S) ON THE SAME CENTERLINE SHALL NOT EXCEED .010 TOTAL INDICATOR READING
ALL DIM. ARE IN INCHES & INCLUDE APPLIED FINISH
WELD SYMBOLS PER MIL-STD-19
RIVET CODE PER NAS 523
THREADS PER MIL-S-7742
MARK PER MIL-STD-130
REMOVE ALL BURRS AND SHARP EDGES
SPECIFICATIONS:

PROJ ENGR		
COMP ENGR		
MAT'L PROC. ENGR		
STRUCT / WTS		
GROUP APP		5-26-66
CHECKED BY		5/23/66
DRAWN BY	Cartwright	4-8-66
ENGR GROUP	0-71100	

LTV RESEARCH CENTER

WINDOW, ELECTRON
DETECTOR ASSY

SIZE	CODE IDENT NO.	
C	11817	N100-10006
SCALE: 4/1	REV.	SHEET

LTVRC-4-C

REVISIONS				
ZONE	LTR	DESCRIPTION	DATE	APPROVED
	A	CHANGED DIM. A FOR -02 PART TO .400 (WAS .300)	1-20-67 1/24/67	DWG BY Lowe CHK BY

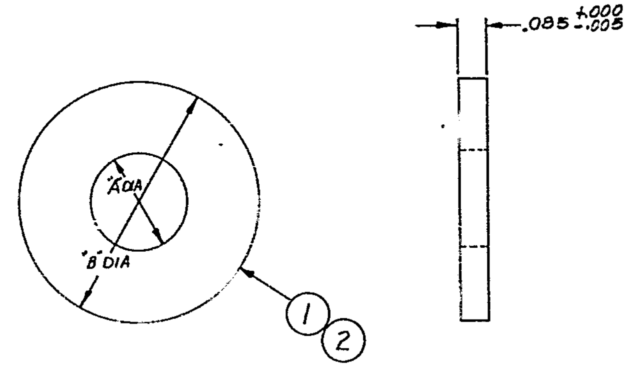

DASH NO.	"A"	"B"
-01	.300	.626
-02	.400	.750

					ZONE	ITEM	CODE IDENT NO.	PART OR IDENTIFYING NO.	NOMENCLATURE OR DESCRIPTION	MATERIAL AND FINISH OR NOTE OR REF DES
			1			2		-02	SHIELD	TANTALUM - SHEET
				1		1		-01	SHIELD	TANTALUM - SHEET
			-02	-01						
QUANTITY REQUIRED										

LIST OF MATERIAL OR PARTS LIST

QTY PER MAJOR ASSY	NEXT ASSEMBLY	USED ON
	N100-10001	N100-00000

UNLESS OTHERWISE SPECIFIED
TOLERANCES ON:
2 PLACE DEC ±.03 3 PLACE DEC ±.010
ANGLES
MACHINED ±0° 15' FORMED ±1° SHEARED ±0° 30'
HOLE TOLERANCE PER AND 10387
SURFACE ROUGHNESS PER MIL-STD-10 125√ MACHINED SURFACE FINISH
DIMENSIONING AND TOLERANCING PER MIL-STD-8
ECCENTRICITY BETWEEN ANY DIA(S) ON THE SAME CENTERLINE SHALL NOT EXCEED .010 TOTAL INDICATOR READING
ALL DIM. ARE IN INCHES & INCLUDE APPLIED FINISH
WELD SYMBOLS PER MIL-STD-19
RIVET CODE PER NAS 523
THREADS PER MIL-S-7742
MARK PER MIL-STD-130
REMOVE ALL BURRS AND SHARP EDGES
SPECIFICATIONS:

PROJ ENGR		
COMP ENGR		
MAT'L PROC ENGR		
STRUCT / WTS		
GROUP APP		5-25-66
CHECKED BY		5/21/66
DRAWN BY		4-14-66
ENGR GROUP	0-71100	

LTV RESEARCH CENTER

COLLIMATOR
DETECTOR ASSY

SIZE C
CODE IDENT NO. 11817
N100-10007
SCALE: NONE
REV.
SHEET

N100-10007

NOTES:
1. BLEACH ALODINE 1200S PER SPEC CVA9-18

REVISIONS				
ZONE	LTR	DESCRIPTION	DATE	APPROVED

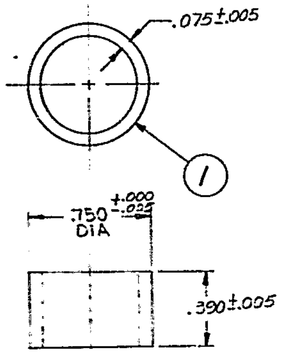

					2					
					1		-01	SPACER	7075-T6 AL	NOTE 1
		-01	ZONE	ITEM		CODE IDENT NO.	PART OR IDENTIFYING NO.	NOMENCLATURE OR DESCRIPTION	MATERIAL AND FINISH OR NOTE OR REF DES	
QUANTITY REQUIRED										

LIST OF MATERIAL OR PARTS LIST

QTY PER MAJOR ASSY	NEXT ASSEMBLY	USED ON
	N100-10001	N100-00000

UNLESS OTHERWISE SPECIFIED
TOLERANCES ON:
2 PLACE DEC ±.02 3 PLACE DEC ±.010
ANGLES
MACHINED ±0° 15' FORMED ±1° SHEARED ±0° 30'
HOLE TOLERANCE PER AND 10387
SURFACE ROUGHNESS PER MIL-STD-10 MACHINED SURFACE FINISH 125√
DIMENSIONING AND TOLERANCING PER MIL-STD-8
ECCENTRICITY BETWEEN ANY DIA(S) ON THE SAME CENTERLINE SHALL NOT EXCEED .010 TOTAL INDICATOR READING
ALL DIM. ARE IN INCHES & INCLUDE APPLIED FINISH
WELD SYMBOLS PER MIL-STD-19
RIVET CODE PER NAS 523
THREADS PER MIL-S-7742
MARK PER MIL-STD-130
REMOVE ALL BURRS AND SHARP EDGES
SPECIFICATIONS:

PROJ ENGR		
COMP ENGR		
MAT'L/PROC-ENGR		
STRUCT / WTS		
GROUP APP		5/25/66
CHECKED BY		5/22/66
DRAWN BY		4-14-66
ENGR GROUP	0-71100	

LTV RESEARCH CENTER

SPACER, COLLIMATOR
DETECTOR ASSY

SIZE	CODE IDENT NO.	
C	11817	N100-10008
SCALE: 2/1	REV.	SHEET

N100-10008

LTVRC-61D

8 7 6 5 4

D C B A

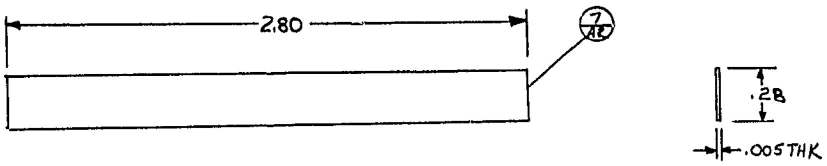

-01 SPACER

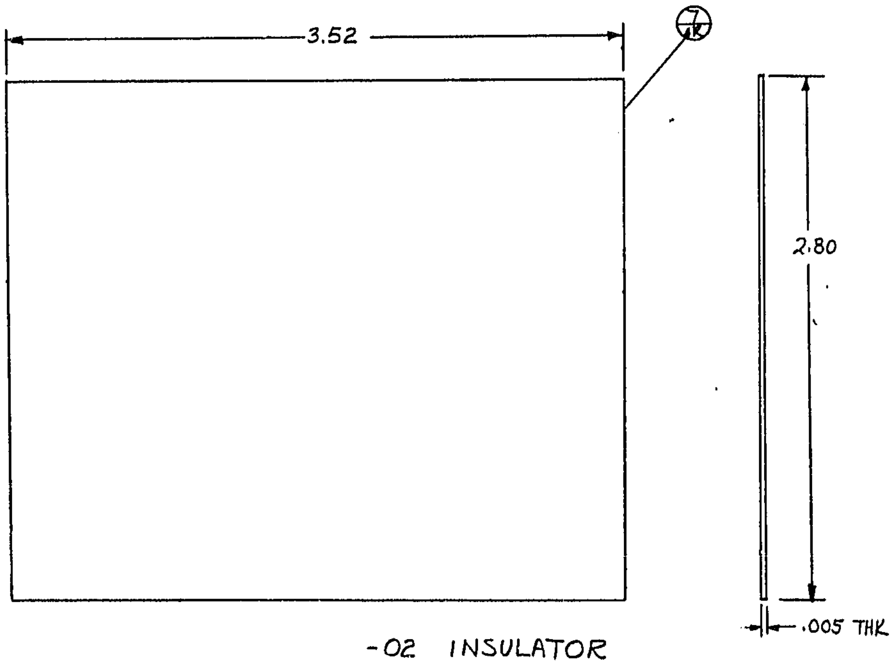

-02 INSULATOR

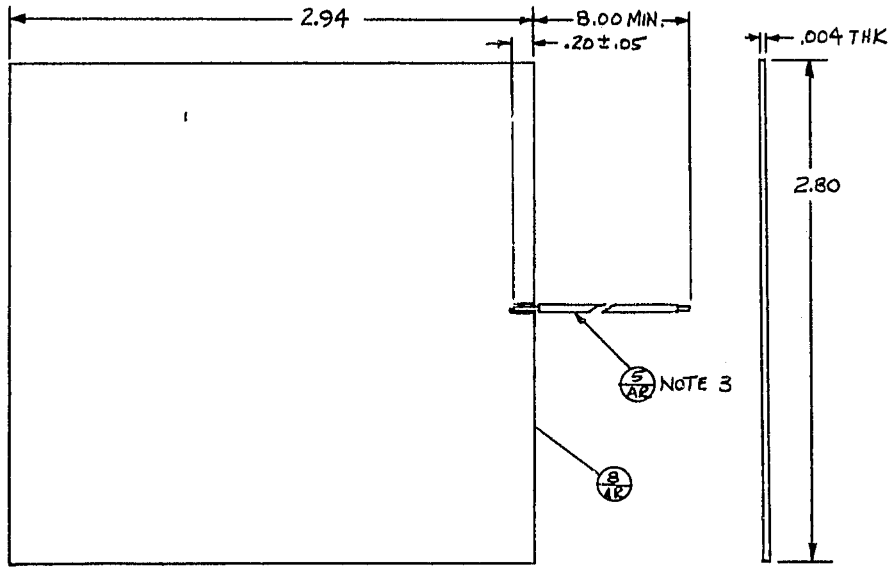

-03 SHIELD

QTY PER MAJOR ASSY	NEXT ASSEMBL
	N100-100

4	3	2	1

NOTES:

1. PERFECTION MICA CO., CHICAGO, ILL.
2. C.P. WAGGONER SALES CO., GRAND PRAIRIE, TEXAS.
3. SOLDER WIRE TO CO-NETIC. MAKE AS FLAT AS POSSIBLE.

REVISIONS

ZONE	LTR	DESCRIPTION	DATE	APPROVED

N100-10010

		AK				8		.004 THK-SHT.	CO-NETIC -	NOTE 1
			AK	AK		7		.005 THK X 4 IN.	TAPE - CLEAR,	NON-ADHESIVE, NOTE 2
						6				
		AK				5		E26-BLK	WIRE	MIL-W-16878
						4				
						3		-03	SHIELD	
						2		-02	INSULATOR	
						1		-01	SPACER	
		-03	-02	-01	ZONE	ITEM	CODE IDENT NO.	PART OR IDENTIFYING NO.	NOMENCLATURE OR DESCRIPTION	MATERIAL AND FINISH OR NOTE OR REF DES
QUANTITY REQUIRED										

LIST OF MATERIAL OR PARTS LIST

QTY PER MAJOR ASSY	NEXT ASSEMBLY	USED ON
	N100-10001	N100-00000

UNLESS OTHERWISE SPECIFIED
TOLERANCES ON:
2 PLACE DEC ±.02
3 PLACE DEC ±.010
ANGLES
MACHINED ±0° 15'
FORMED ±1°
SHEARED ±0° 30'
HOLE TOLERANCE PER AND 10387
SURFACE ROUGHNESS PER MIL-STD-10
MACHINED SURFACE FINISH 125✓
DIMENSIONING AND TOLERANCING PER MIL-STD-8
ECCENTRICITY BETWEEN ANY DIA(S) ON THE SAME CENTERLINE SHALL NOT EXCEED .010 TOTAL INDICATOR READING
ALL DIM. ARE IN INCHES & INCLUDE APPLIED FINISH
WELD SYMBOLS PER MIL-STD-19
RIVET CODE PER NAS 523
THREADS PER MIL-S-7742
MARK PER MIL-STD-130
REMOVE ALL BURRS AND SHARP EDGES
SPECIFICATIONS:

PROJ ENGR		
COMP ENGR		
MAT'L/PROC ENGR		
STRUCT / WTS		
GROUP APP	B.J. [illegible]	11/4/6-
CHECKED BY	C. Antrikian	7/14/6-
DRAWN BY	R.G. Boqwell	7/13/66
ENGR GROUP	O-71100	

LTV RESEARCH CENTER

DETAILS
MYLAR & CO-NETIC

SIZE	CODE IDENT NO.	
D	11817	N100-10010

SCALE: 2/1 REV. SHEET

LTVRC-010

8 7 6 5 4

D C B A

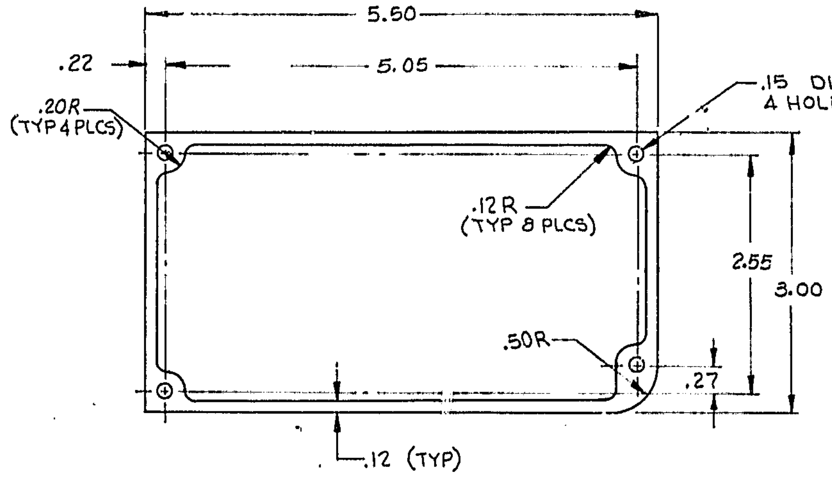

−01 GASKET
SCALE: 1/1

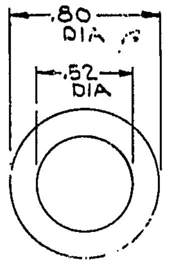

−03 GASKET
SCALE: 2/1

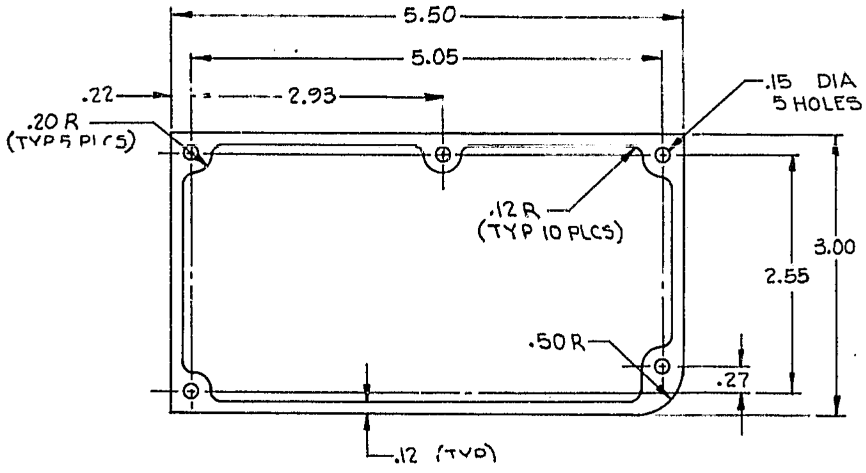

−02 GASKET
SCALE: 1/1

QTY PER MAJOR ASSY *	NEXT
−01	N100 -
−02	N100 -
−03	N100 -
−04	N100 -

4 3 2 1

REVISIONS				
ZONE	LTR	DESCRIPTION	DATE	APPROVED

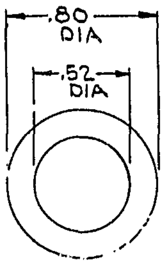

−03 GASKET
SCALE: 2/1

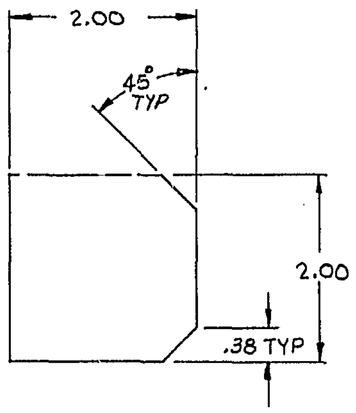

−04 GASKET
SCALE: 1/1

N100-10015

					4		− 04	GASKET	.063 THK SILICONE RUBBER
					3		− 03	GASKET	.032 THK SILICONE RUBBER
					2		−02	GASKET	.063 THK SILICONE RUBBER
					1		−01	GASKET	.063 THK SILICONE RUBBER
-04	-03	-02	-01	ZONE	ITEM	CODE IDENT NO.	PART OR IDENTIFYING NO.	NOMENCLATURE OR DESCRIPTION	MATERIAL AND FINISH OR NOTE OR REF DES.
QUANTITY REQUIRED									

LIST OF MATERIAL OR PARTS LIST

QTY PER MAJOR ASSY	NEXT ASSEMBLY	USED ON
−01	N100−00000	N100-00000
−02	N100-10000	N100-00000
−03	N100-10001	N100-00000
−04	N100-0000	N100-00000

UNLESS OTHERWISE SPECIFIED
TOLERANCES ON:
2 PLACE DEC ±.02 3 PLACE DEC ±.010
ANGLES
MACHINED ±0° 15' FORMED ±1° SHEARED ±0° 30'
HOLE TOLERANCE PER AND 10387
SURFACE ROUGHNESS PER MIL-STD-10
MACHINED SURFACE FINISH 125 ✓
DIMENSIONING AND TOLERANCING PER MIL-STD-8
ECCENTRICITY BETWEEN ANY DIA(S) ON THE SAME CENTERLINE SHALL NOT EXCEED .010 TOTAL INDICATOR READING
ALL DIM. ARE IN INCHES & INCLUDE APPLIED FINISH
WELD SYMBOLS PER MIL-STD-19
RIVET CODE PER NAS 523
THREADS PER MIL-S-7742
MARK PER MIL-STD-130
REMOVE ALL BURRS AND SHARP EDGES
SPECIFICATIONS:

PROJ ENGR		
COMP ENGR		
MAT'L/PROC ENGR		
STRUCT / WTS		
GROUP APP	C J Lamm	5/13/66
CHECKED BY	[illegible]	5/20/66
DRAWN BY	CART[illegible]	[illegible]16-66
ENGR GROUP	0-71100	

LTV RESEARCH CENTER

GASKETS

CODE IDENT NO.
D 11817 N100-10015
SCALE: NOTED REV. SHEET

A B C D

2

LTVAC-010

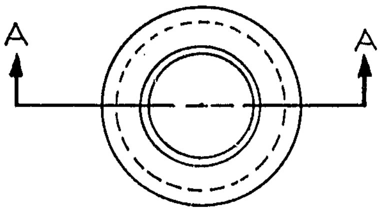

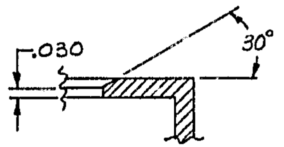

DETAIL "Z"
SCALE 4/1

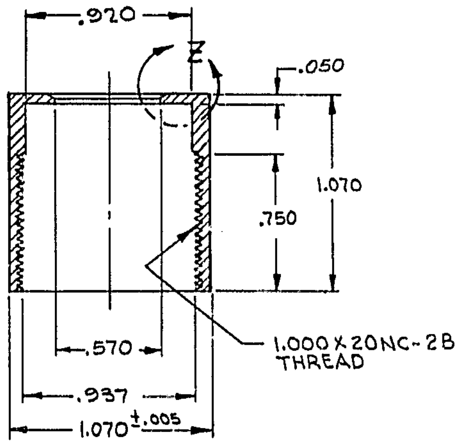

DETAIL -01
SCALE 2/1

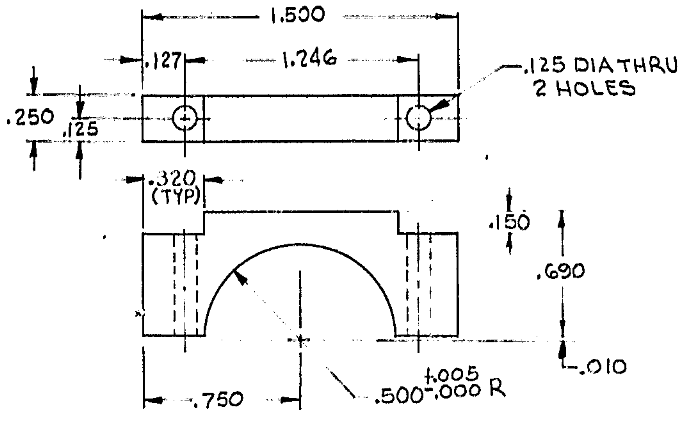

DETAIL - 04
SCALE 2/1

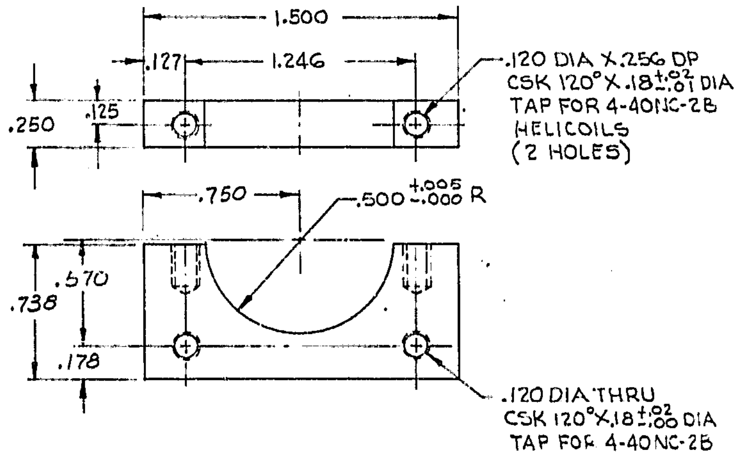

DETAIL-05
SCALE 2/1

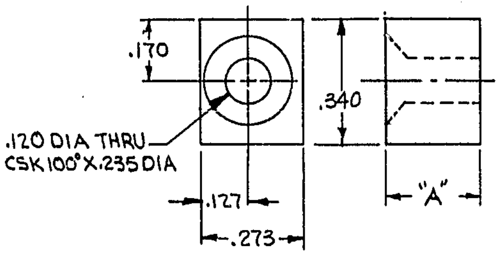

DASH NO.	"A" DIM
-02	.208
-03	.190

DETAIL -02 & -03
SCALE: 4/1

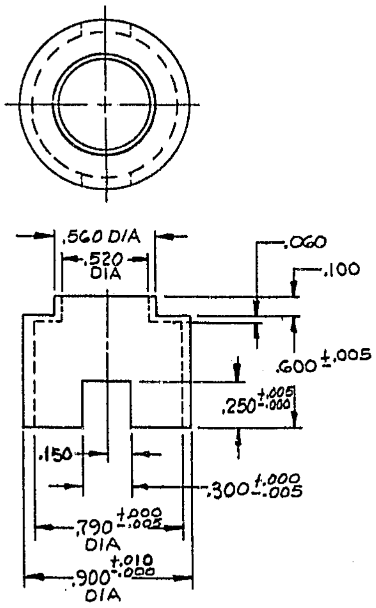

DETAIL - 07
SCALE: 2/1

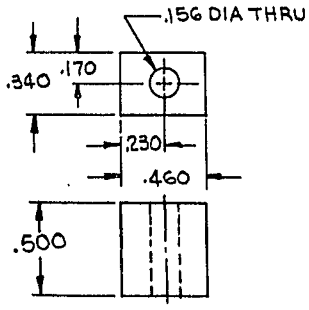

DETAIL -06
SCALE 2/1
2 REQD

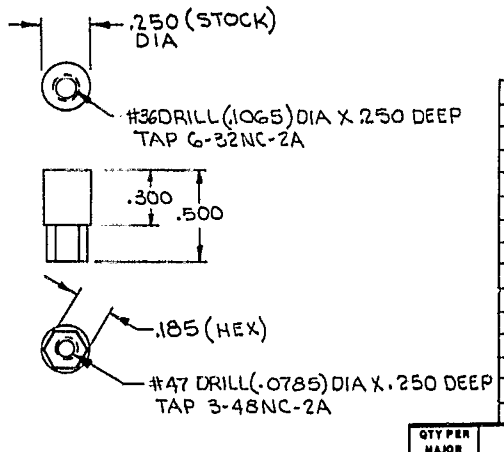

DETAIL - 08
SCALE: 2/1

QTY PER MAJOR ASSY	
-01	N
-02	N
-03	N
-04	N
-05	N
-06	N
-07	N
-08	N
-09	N

1

NOTES:
1. BLEACH ALODINE 1200S PER SPEC CVA 9-18
2. INSTALL HELICOILS AFTER FINISH

REVISIONS

ZONE	LTR	DESCRIPTION	DATE	APPROVED
	A	INCORPORATED EO NO. N100.1, N100.3, & N100.13.	1-3-67 1/24/67	D. Lowe CHK BY R.L. Bagwell

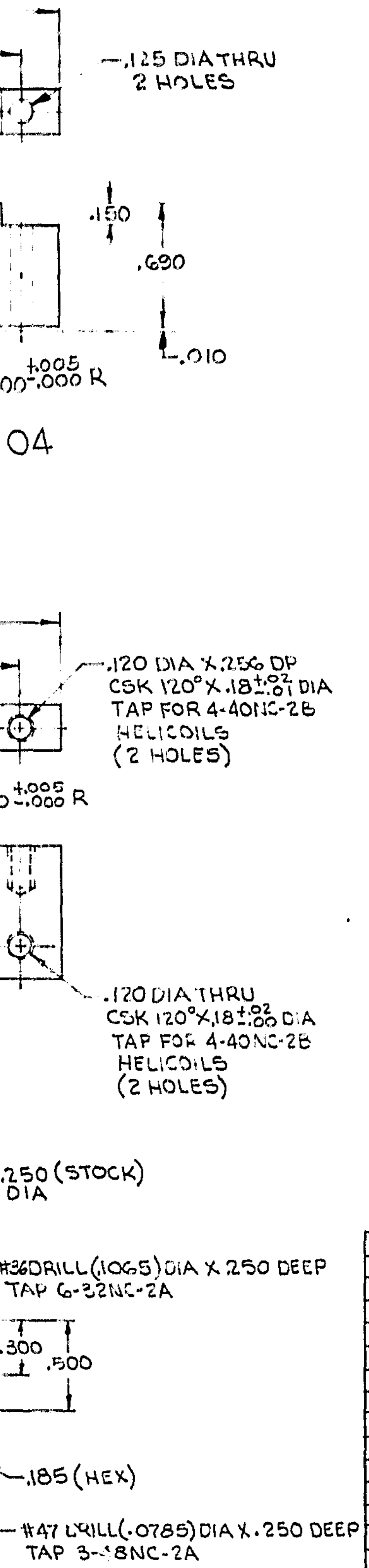

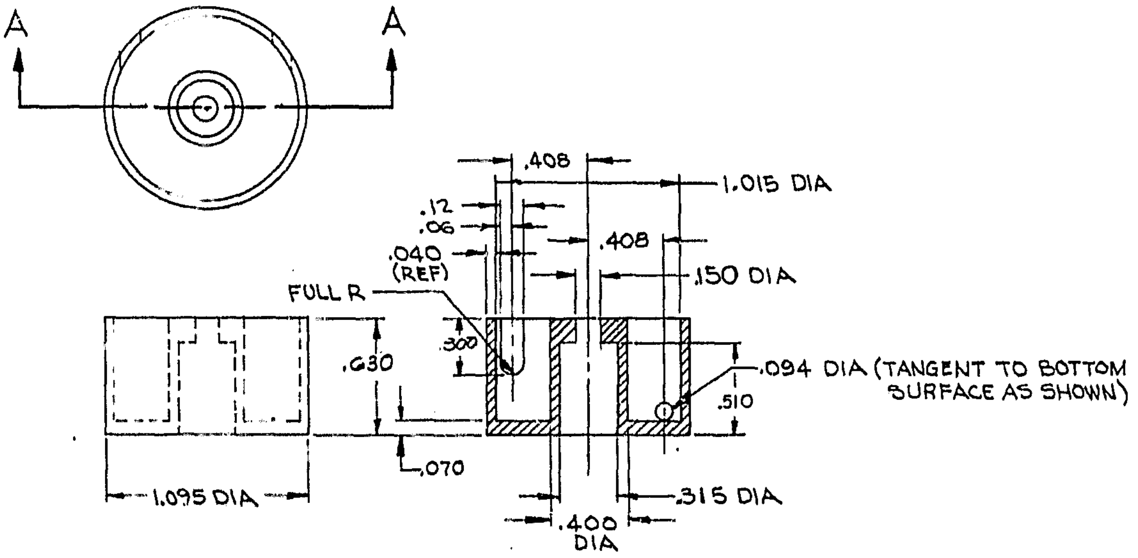

DETAIL - 09
SCALE: 2/1

-09	-08	-07	-06	-05	-04	-03	-02	-01	ZONE	ITEM	CODE IDENT NO.	PART OR IDENTIFYING NO.	NOMENCLATURE OR DESCRIPTION	MATERIAL AND FINISH OR NOTE OR REF DES.
QUANTITY REQUIRED														
				4						12			HELICOIL	NOTE 2
										11				
										10				
1										9		-09	HOLDER, DELAY LINE	7075-T6 AL NOTE 1
	1									8		-08	SPACER	CRES 303
		1								7		-07	INSULATOR CAP	DELRIN
			2							6		-06	SPACER	7075-T6 AL NOTE 1
				1						5		-05	CLAMP	7075-T6 AL NOTES 1 & 2
					1					4		-04	CLAMP	7075-T6 AL NOTE 1
						1				3		-03	SPACER	7075-T6 AL NOTE 1
							5			2		-02	SPACER	7075-T6 AL NOTE 1
								1		1		-01	CAP	CRES 17-4PH (AMS 5643)

LIST OF MATERIAL OR PARTS LIST

QTY PER MAJOR ASSY	NEXT ASSEMBLY	USED ON
-01	N100-10001	N100-00000
-02	N100-10000	N100-00000
-03	N100-10000	N100-00000
-04	N100-10000	N100-00000
-05	N100-10000	N100-00000
-06	N100-10000	N100-00000
-07	N100-10001	N100-00000
-08	N100-15000	N100-00000
-09	N100-10019	N100-00000

UNLESS OTHERWISE SPECIFIED
TOLERANCES ON:
2 PLACE DEC ±.03 3 PLACE DEC ±.010
ANGLES
MACHINED ±0°15' FORMED ±1° SHEARED ±0°30'
HOLE TOLERANCE PER AND 10387
SURFACE ROUGHNESS PER MIL-STD-10 125√ MACHINED SURFACE FINISH
DIMENSIONING AND TOLERANCING PER MIL-STD-8
ECCENTRICITY BETWEEN ANY DIA(S) ON THE SAME CENTERLINE SHALL NOT EXCEED .010 TOTAL INDICATOR READING
ALL DIM. ARE IN INCHES & INCLUDE APPLIED FINISH
WELD SYMBOLS PER MIL-STD-19
RIVET CODE PER NAS 523
THREADS PER MIL-S-7742
MARK PER MIL-STD-130
REMOVE ALL BURRS AND SHARP EDGES
SPECIFICATIONS:

PROJ ENGR		
COMP ENGR		
MAT'L/PROC ENGR		
STRUCT / WTS		
GROUP APP	B.J. Garen	5-25-66
CHECKED BY	B. Bagwell	5/26/66
DRAWN BY	Cartwright	4-30-66
ENGR GROUP	0-71100	

LTV RESEARCH CENTER

DETAILS

SIZE	CODE IDENT NO.	
D	11817	N100-10016

SCALE: NOTED REV. A SHEET

N100-10016 A

2

NOTES;
1. PILOT CHEMICAL CORP., WATERTOWN, MASS.
2. HARSHAW CHEMICAL CO., CLEVELAND, OHIO.
3. POLISH CRYSTAL USING DE-IONIZED WATER.

REVISIONS				
ZONE	LTR	DESCRIPTION	DATE	APPROVED

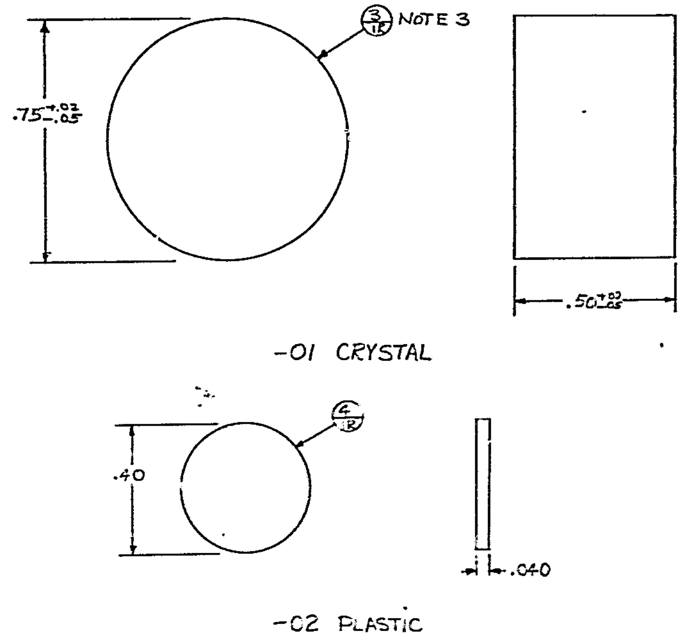

QUANTITY REQUIRED					ZONE	ITEM	CODE IDENT NO.	PART OR IDENTIFYING NO.	NOMENCLATURE OR DESCRIPTION	MATERIAL AND FINISH OR NOTE OR REF DES
			1			4		PILOT-B	PLASTIC	NOTE 1
				1		3		CsI (TL)	CRYSTAL	NOTE 2
						2		−02	PLASTIC	
						1		−01	CRYSTAL	
			−02	−01						

LIST OF MATERIAL OR PARTS LIST

QTY PER MAJOR ASSY	NEXT ASSEMBLY	USED ON
−01	N100-10001	N100-00000
−02	N100-10001	N100-00000

UNLESS OTHERWISE SPECIFIED
TOLERANCES ON
2 PLACE DEC ± .02
3 PLACE DEC ± .010
ANGLES
MACHINED ± 0° 15'
FORMED ± 1°
SHEARED ± 2° 30'
HOLE TOLERANCE PER AND 10387
SURFACE ROUGHNESS PER MIL-STD-10
MACHINED SURFACE FINISH 125 √
DIMENSIONING AND TOLERANCING PER MIL-STD-8
ECCENTRICITY BETWEEN ANY DIA'S ON THE SAME CENTERLINE SHALL NOT EXCEED .010 TOTAL INDICATOR READING
ALL DIM ARE IN INCHES & INCLUDE APPLIED FINISH
WELD SYMBOLS PER MIL-STD-19
RIVET CODE PER NAS 523
THREADS PER MIL-S-7742
MARK PER MIL-STD-130
REMOVE ALL BURRS AND SHARP EDGES
SPECIFICATIONS:

PROJ ENGR
COMP ENGR
MAT'L & PROC ENGR
STRUCT
WTS
GROUP APP [illegible]
CHECKED BY [illegible]
DRAWN BY [illegible]
ENGR GROUP [illegible]

LTV RESEARCH CENTER

DETAILS
CRYSTAL & PLASTIC

SIZE: C
CODE IDENT NO.: 11817
N100-10017
SCALE: 4/1
REV.
SHEET

N100-10017

REVISIONS				
ZONE	LTR	DESCRIPTION	DATE	APPROVED
	A	INCORPORATED EO. NO. N...014		

NOTES:
1. SELECTRO CORP., MAMARONECK, N.Y.
2. RAYCLAD TUBES, INC. REDWOOD CITY, CALIF.
3. INSTALL SLEEVES PER 208-13-64.
4. INSTALL CONNECTOR PER VENDOR INSTRUCTIONS.

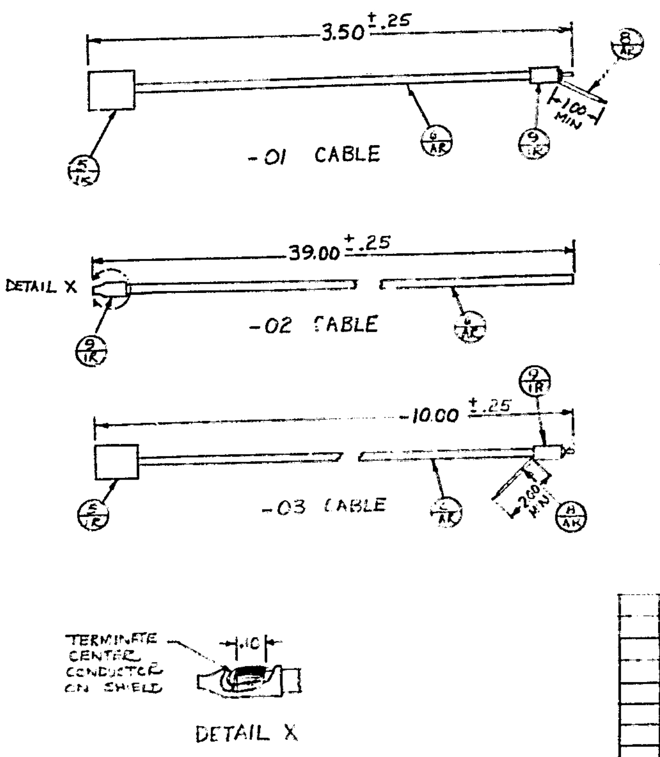

QUANTITY REQUIRED					ZONE	ITEM	CODE IDENT NO.	PART OR IDENTIFYING NO.	NOMENCLATURE OR DESCRIPTION	MATERIAL AND FINISH OR NOTE OR REF DES
		-03	-02	-01						
		1	1	1		9		D101	SLEEVE, SOLDER	NOTES 2&3
		AR	AL	AE		8		E24, BLK	WIRE	MIL-W-...878
						7				
		11	40	36		6		RG-...	CABLE	MIL-C-... (...
		1		1		5		...-24-...-23	CONNECTORS	NOTES 1&4
						4				
						3		-03	CABLE	
						2		-02	CABLE	
						1		-01	CABLE	

LIST OF MATERIAL OR PARTS LIST

QTY PER MAJOR ASSY	NEXT ASSEMBLY	USED ON
-01	N100-15000	N100-00000
-02	N100-10019	N100-00000
-03	N100-10200	N100-00000

UNLESS OTHERWISE SPECIFIED
TOLERANCES ON
2 PLACE DEC ±.02
3 PLACE DEC ±.010
ANGLES
MACHINED ±0°15
FORMED ±1
SHEARED ±0°30
HOLE TOLERANCE PER AND 10387
SURFACE ROUGHNESS PER MIL-STD-10
125 ✓ MACHINED SURFACE FINISH
DIMENSIONING AND TOLERANCING PER MIL-STD-8
ECCENTRICITY BETWEEN ANY DIA'S ON THE SAME CENTERLINE SHALL NOT EXCEED .010 TOTAL INDICATOR READING
ALL DIM ARE IN INCHES AND INCLUDE APPLIED FINISH
WELD SYMBOLS PER MIL-STD-19
RIVET CODE PER NAS 523
THREADS PER MIL-S-7742
MARK PER MIL-STD-130
REMOVE ALL BURRS AND SHARP EDGES
SPECIFICATIONS

PROJ ENGR		
MFG ENGR		
MAT'L & PROC ENGR		
STRUCT	WTS	
GROUP ENGR		2/21/66
CHECKED BY		
DRAWN BY		7/11/66
ENGR GROUP		

LTV RESEARCH CENTER

CABLES

SIZE	CODE IDENT NO.	
C	11817	N100-10018

SCALE NONE REV. A SHEET

NOTES:
1. DOW CORNING CORP, MIDLAND, MICHIGAN.
2. RAYCLAD TUBES, INC., REDWOOD CITY, CALIF.
3. INSTALL SLEEVES PER 208-13-64.
4. APPLY ITEM 7 OVER CABLE COIL.

REVISIONS				
ZONE	LTR	DESCRIPTION	DATE	APPROVED

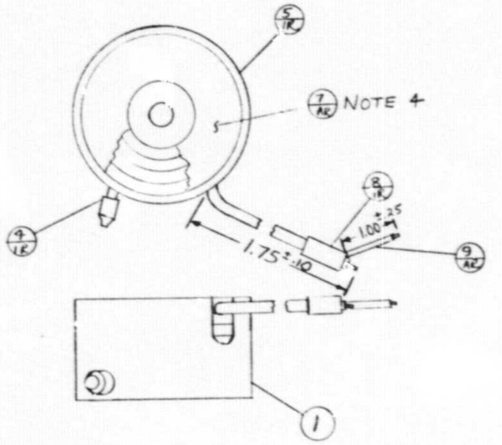

			AR		9		E24, BLK	WIRE	MIL-W-16878
			1		8		D101	SLEEVE, SOLDER	NOTE 2
			AR		7		RTV-732	SEALANT	NOTE 1
					6				
			1		5		N100-10016-09	HOLDER, DELAY LINE	
			1		4		N100-10018-02	CABLE	
					3				
					2				
					1		-01	ASSY, DELAY LINE	
			-01	ZONE	ITEM	CODE IDENT NO.	PART OR IDENTIFYING NO.	NOMENCLATURE OR DESCRIPTION	MATERIAL AND FINISH OR NOTE OR REF DES
QUANTITY REQUIRED									

LIST OF MATERIAL OR PARTS LIST

QTY PER MAJOR ASSY	NEXT ASSEMBLY	USED ON
	N100-15000	N100-00000

UNLESS OTHERWISE SPECIFIED
TOLERANCES ON:
2 PLACE DEC ±.02
3 PLACE DEC ±.010
ANGLES
MACHINED ±0° 15'
FORMED ±1°
SHEARED ±0° 30'
HOLE TOLERANCE PER AND 10387
SURFACE ROUGHNESS PER MIL-STD-10
MACHINED SURFACE FINISH 125 ✓
DIMENSIONING AND TOLERANCING PER MIL-STD-8
ECCENTRICITY BETWEEN ANY DIA(S) ON THE SAME CENTERLINE SHALL NOT EXCEED .010 TOTAL INDICATOR READING
ALL DIM. ARE IN INCHES & INCLUDE APPLIED FINISH
WELD SYMBOLS PER MIL-STD-19
RIVET CODE PER NAS 523
THREADS PER MIL-S-7742
MARK PER MIL-STD-130
REMOVE ALL BURRS AND SHARP EDGES
SPECIFICATIONS

PROJ ENGR		
COMP ENGR		
MAT'L & PROC ENGR		
STRUCT / WTS		
GROUP APP	[illegible]	7/12/66
CHECKED BY	[illegible]	[illegible]
DRAWN BY	R G Bracewell	7/11/66
ENGR GROUP	O-71100	

LTV RESEARCH CENTER

ASSEMBLY
DELAY LINE

SIZE	CODE IDENT NO.	
C	11817	N100-10019
SCALE: NONE	REV.	SHEET

N100-10019

									N100-10100
4		3		2		1			

REVISIONS

ZONE	LTR	DESCRIPTION	DATE	APPROVED

NOTES:
1. MAKE FROM .032 THK. SILICONE RUBBER PER MIL-?-5847, CLASS 2A.
2. GENERAL ELECTRIC, SILICONE PRODUCTS DEPARTMENT, WATERFORD, N.Y.
3. BOND ITEM 2 & ITEM 3 USING ITEM 5.
4. 2 PLC. DEC. TOLERANCE ±.03 ON ITEM 3

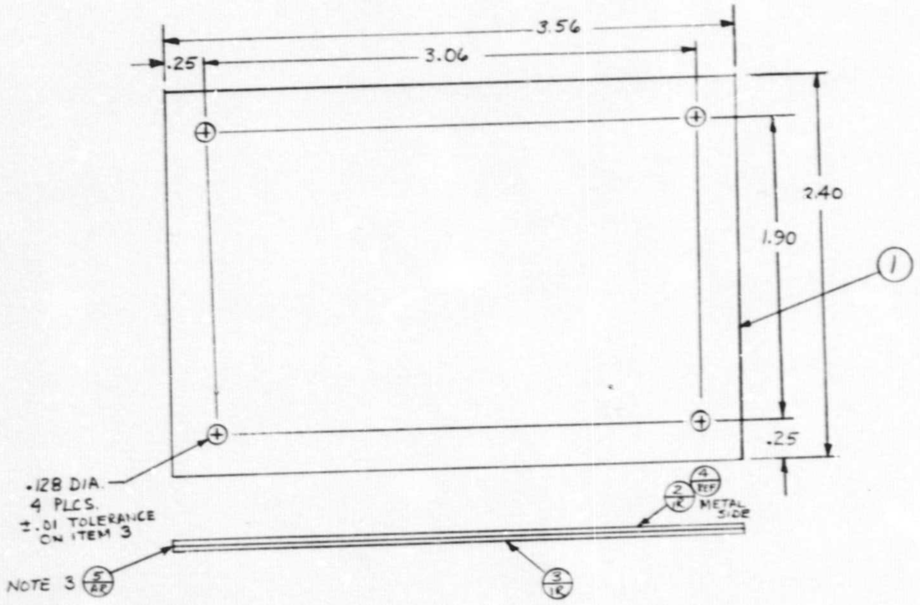

LIST OF MATERIAL OR PARTS LIST

QUANTITY REQUIRED						ZONE	ITEM	CODE IDENT NO.	PART OR IDENTIFYING NO.	NOMENCLATURE OR DESCRIPTION	MATERIAL AND FINISH OR NOTE OR REF DES
				-02	-01						
					AR		5		[illegible]	SEALANT	NOTE 2
				REF			4		[illegible] 01-01	ARTWORK	
					1		3		-03	INSULATOR	NOTE 1
					1		2		-02	BOARD, SHIELD	.031 THK-1/2OZ.-MIL-P-13949, GEE
							1		-01	SHIELD ASSY	

QTY PER MAJOR ASSY	NEXT ASSEMBLY	USED ON
	N100-13000	N100-00000
	N100-11000	N100-00000

UNLESS OTHERWISE SPECIFIED
TOLERANCES ON:
2 PLACE DEC ±.03 NOTE 4 3 PLACE DEC ±.010
ANGLES MACHINED ±0° 15' FORMED ±1° SHEARED ±0° 30'
HOLE TOLERANCE PER AND 10387
SURFACE ROUGHNESS PER MIL-STD-10 MACHINED SURFACE FINISH 125 √
DIMENSIONING AND TOLERANCING PER MIL-STD-8
ECCENTRICITY BETWEEN ANY DIA(S) ON THE SAME CENTERLINE SHALL NOT EXCEED .010 TOTAL INDICATOR READING
ALL DIM. ARE IN INCHES & INCLUDE APPLIED FINISH
WELD SYMBOLS PER MIL-STD-19
RIVET CODE PER NAS 523
THREADS PER MIL-S-7742
MARK PER MIL-STD-130
REMOVE ALL BURRS AND SHARP EDGES
SPECIFICATIONS

PROJ ENGR		
COMP ENGR		
MAT'L/PROC ENGR		
STRUCT / WTS		
GROUP APP	[illegible]	7/13/6[illegible]
CHECKED BY	J H JOHNSTON	7/13/6[illegible]
DRAWN BY	R G B[illegible]ll	7/13/66
ENGR GROUP	0-7/100	

LTV RESEARCH CENTER

SHIELD ASSY
P.C. BOARD

SIZE	CODE IDENT NO.	
C	11817	N100-10100

SCALE: 2/1 REV. SHEET

LTVRC-610

8 7 6 5

D

WIRE COLOR	GA.	FROM	TO	LENGTH	NOTE
BLK	24	P1-A	SHLD P1-N		
BLK	22	P1-B	A7-GRD-1		
BLK	22	P1-C	CHASSIS GRD2 }		1
BLK	22	P1-D	" " }		1
BLK	22	P1-E	" " "		5
		P1-F			
BLK	22	P1-G	CHASSIS GRD 2		5
BLK	22	P1-H	CHASSIS GRD 2		
BLK	24	P1-J	SHLD P1-T		
BLK	22	P1-K	CHASSIS GRD 2		
BLK	24	P1-L	SHLD P1-M		
RG178 B/U		P1-M	J103-A		
RG178 B/U		P1-N	J103-D		
RED	22	P1-P	L1-1		
GRN	24	P1-R	A7-TEMP MON		
RG178 B/U		P1-T	J103-1		
		P1-U			
RG178 B/U		P2-A	J103-4		
WHT	24	P2-B	A7-+4V MON		
RG178 B/U		P2-C	A7-TEST		
BLK	24	P2-D	SHLD P2-C		
RG178 B/U		P2-E	J103-1		
BLK	24	P2-F	SHLD P2-G		
RG178 B/U		P2-G	J103-D		
BLK	24	P2-H	SHLD P2-A		
RG178 B/U		P2-J	J103-A		
BLK	24	P2-K	SHLD P2-J		
TIE TOGETHER		SHLD P2-E	SHLD P2-J		
REF		L1-1	P1-P		
WHT	24	J101-A	A6-+4V-1		
WHT	24	J101-A	J102-1		
GRN	24	J101-B	J102-2		2
BLK	24	J101-F	J102-6		2
BARE	24	J101-F	J101-6		
REF		J101-6	J101-F		
BLK	24	J101-6	A6-GRD-1		
BLK	24	J102-F	J103-5		2
BARE	24	J102-F	J102-6		
REF		J102-1	J101-A		
WHT	24	J102-1	J103-3		
REF		J102-2	J101-B		
GRN	24	J102-4	J103-B		
RED	24	J102-5	J103-2		
REF		J102-6	J102-F		
REF		J102-6	J101-F		
REF		SHLD P1-N	P1-A		
REF		CHASSIS GRD 2	P1-E		
REF		CHASSIS GRD 2	P1-G		
REF		CHASSIS GRD 2	P1-H		
REF		SHLD P1-T	P1-J		
REF		CHASSIS GRD 2	P1-K		
REF		SHLD P1-M	P1-L		
REF		SHLD P2-C	P2-D		
REF		SHLD P2-G	P2-F		
REF		SHLD P2-A	P2-H		
REF		SHLD P2-J	P2-K		
REF		SHLD P2-J	SHLD P2-E		

WIRE COLOR	GA.	FROM	TO	LENGTH	NOTE
REF		J103-A	P1-M		
REF		J103-A	P2-J		
REF		J103-B	J102-4		
REF		J103-D	P1-N		
REF		J103-D	P2-G		
RED	24	J103-E	A6-+12V		
BARE	24	J103-F	J103-5		
REF		J103-1	P1-T		
REF		J103-1	P2-E		
REF		J103-2	J102-5		
REF		J103-3	J102-1		
REF		J103-4	P2-A		
REF		J103-5	J103-F		
REF		J103-5	J102-F		
N100-10018-03		J103-6	P105 (A7)		3
SEE NOTE		J103-F	SHLD J103-6		EXISTING WIRE
BLK	24	CHASSIS GRD1	SHLD J103-D(P1)		
TIE TOGETHER		SHLD J103-A(P2)	SHLD J103-A(P1)		
TIE TOGETHER		SHLD J103-D(P1)	SHLD J103-D(P2)		
TIE TOGETHER		SHLD J103-1(P2)	SHLD J103-1(P1)		
BLK	24	SHLD J103-A(P1)	SHLD J103-D(P1)		
REF		SHLD J103-D(P1)	CHASSIS GRD 1		
BLK	24	SHLD J103-1(P1)	SHLD J103-4(P2)		
REF		SHLD J103-6	J103-F		
BLK	24	SHLD J103-4(P2)	CHASSIS GRD1		
REF		SHLD J103-A(P1)	SHLD J103-A(P2)		
REF		SHLD J103-D(P1)	SHLD J103-A(P1)		
REF		SHLD J103-D(P2)	SHLD J103-D(P1)		
REF		SHLD J103-1(P1)	SHLD J103-1(P2)		
REF		SHLD J103-4(P2)	SHLD J103-1(P1)		
REF		CHASSIS GND 1	SHLD J103-4(P2)		
ITEM 20		J103-F	CHASSIS GRD1		} SEE
REF		CHASSIS GRD1	J103-F		} VIEW D-D
WHT	24	A6-+4V-2	A7-+4V		
REF		A6-+4V-1	J101-A		
BLK	22	A6-GRD-2	A7-GRD-2		
REF		A6-GRD-1	J101-6		
RED	24	A6-+6.8V	A7 +6.8V		
REF		A6-+12V	J103-E		
RED	[illegible]2	A6-+28V	A7-+28V		
REF		CHASSIS GRD 2	P1-C&D		
REF		A7-GRD-2	A6-GRD-2		
REF		A7-GRD-1	P1-B		
REF		A7-+4V	A6-+4V-2		
REF		A7-+4V MON	P2-B		
REF		A7-+28V	A6-+28V		
REF		A7-TEST	P2-C		
BLK	24	A7-TEST GRD	SHLD A7-TEST		
N100-10018-03 REF		P105 (A7)	J103-6		
REF		SHLD A7-TEST	A7-TEST GRD		
REF		A7-TEMP MON	P1-R		
REF		A7-+6.8V	A6-+6.8V		
ITEM 19		J 103-5	CHASSIS GND 1		} SEE
REF		CHASSIS GND. 1	J103-5		} VIEW D-D

C

B

A

QTY PER MAJOR ASSY

J

LENGTH	NOTE
	3 EXISTING WIRE
	SEE VIEW D-D
	SEE VIEW D-D

REVISIONS				
ZONE	LTR	DESCRIPTION	DATE	APPROVED
	A	INCUPORATED E.O. NO. N100.14	1-12-67 1/24/67	DWG. R? So Lowe CHK BY RW Bergquist

NOTES:
1. TWO(2) INCH LENGTS OF WIRE FROM PI-C&D TO BE SPLICED TOGETHER WITH A THIRD WIRE TO CASE GRD PER 208-13-64
2. MAKE WIRES POINT TO POINT WITH MIN STRAIN LOOP
3. REF VENDOR INFO FOR CONNECTOR ATTACHMENT
4. SOLDER PER NPC 200-4
5. TWO(2) INCH LENGTHS OF WIRE FROM PI-E&G TO BE SPLICED TOGETHER WITH A THIRD WIRE TO CASE GRD PER 208-13-64
6. CINCH MANUFACTURING CO., CHICAGO, ILL.
7. SCINTILLA DIVISION, BENDIX CORP, SIDNEY, N.Y.
8. FABRICATE HARNESS PER SPEC 308-11-2 EXCEPT AS NOTED.
9. ELECTRO MATERIALS CORP SAN DIEGO CALIF.

-01	ZONE	ITEM	CODE IDENT NO.	PART OR IDENTIFYING NO.	NOMENCLATURE OR DESCRIPTION	MATERIAL AND FINISH OR NOTE OR REF DES	
AR		22		RG178B/U	CABLE	MIL-C-17	
		21					
1		20		CK06CW103K	CAPACITOR	MIL-C-11015	C12
1		19		EL50AT224K	CAPACITOR	NOTE 9	
3		18		MS35341-1	LUG		
AR		17		24 AWG, SOFT, TINNED	WIRE, BARE	QQ-W-343, TYPE S	
AR		16		E22, RED	WIRE	MIL-W-16878	
AR		15		E22, BLK			
AR		14		E24, RED			
AR		13		E24, WHT			
AR		12		E24, GRN			
AR		11		E24, BLK	WIRE	MIL-W-16878	
1		10		PT07H-12-10P	CONNECTOR	NOTE 7	P2
3		9		251-06-30-160	CONNECTOR	NOTE 6	J101, J102, J103
1		8		PT07H-14-18P	CONNECTOR	NOTE 7	P1
		7					
1		6		N100-10018-03	CABLE		
1		5		N100-14000-01	COMP ASSY		A6
1		4		N100-15000-01	COMP ASSY		A7
REF		3		N100-10900	SCHEMATIC		
		2					
		1		-01	HARNESS		

QUANTITY REQUIRED

LIST OF MATERIAL OR PARTS LIST

QTY PER MAJOR ASSY	NEXT ASSEMBLY	USED ON
	N100-10000	N100-00000

UNLESS OTHERWISE SPECIFIED
TOLERANCES ON:
2 PLACE DEC ±.03
3 PLACE DEC ±.010
ANGLES
MACHINED ±0° 15'
FORMED ±1°
SHEARED ±0° 30'
HOLE TOLERANCE PER AND 10387
SURFACE ROUGHNESS PER MIL-STD-10
MACHINED SURFACE FINISH ✓
DIMENSIONING AND TOLERANCING PER MIL-STD-8
ECCENTRICITY BETWEEN ANY DIA(S) ON THE SAME CENTERLINE SHALL NOT EXCEED .010 TOTAL INDICATOR READING
ALL DIM. ARE IN INCHES & INCLUDE APPLIED FINISH
WELD SYMBOLS PER MIL-STD-19
RIVET CODE PER NAS 523
THREADS PER MIL-S-7742
MARK PER MIL-STD-130
REMOVE ALL BURRS AND SHARP EDGES
SPECIFICATIONS:

PROJ ENGR		
COMP ENGR		
MAT'L/PROC ENGR		
STRUCT / WTS		
GROUP APP	B J [illegible]	8/1/66
CHECKED BY	R. Bergquist	7/29/66
DRAWN BY	Cartwright	7-28-66
ENGR GROUP	0-71100	

LTV RESEARCH CENTER

HARNESS, WIRING
LOW VOLTAGE

SIZE	CODE IDENT NO.	
D	11817	N100-10200
SCALE: NONE	REV. A	SHEET 1 OF 2

N100-10200 A

2

D

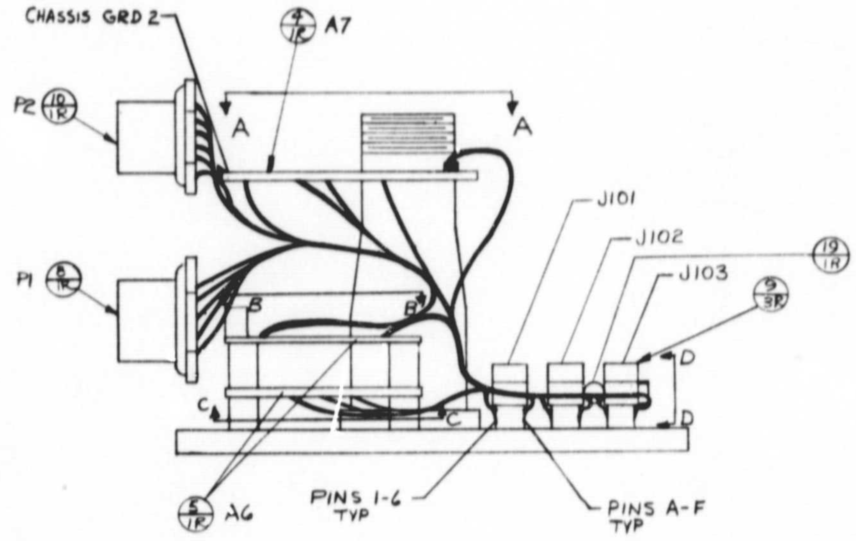

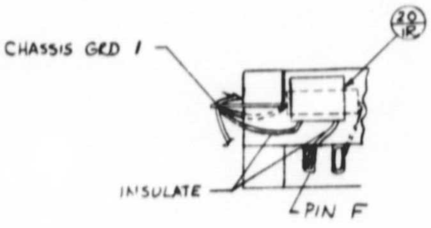

VIEW D-D
ROTATED 90° CW

C

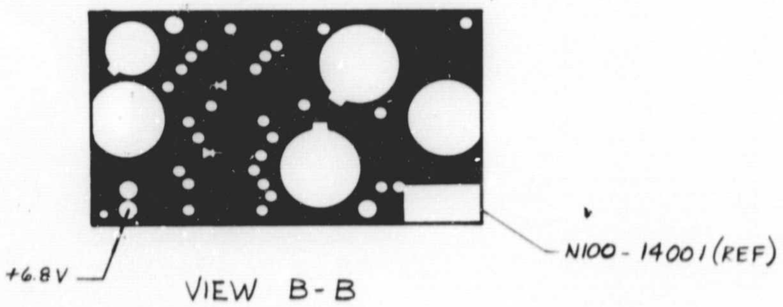

VIEW B-B

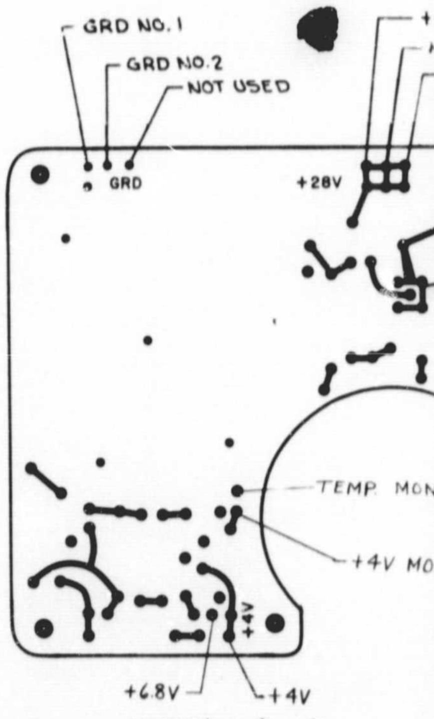

VIEW A-A

B

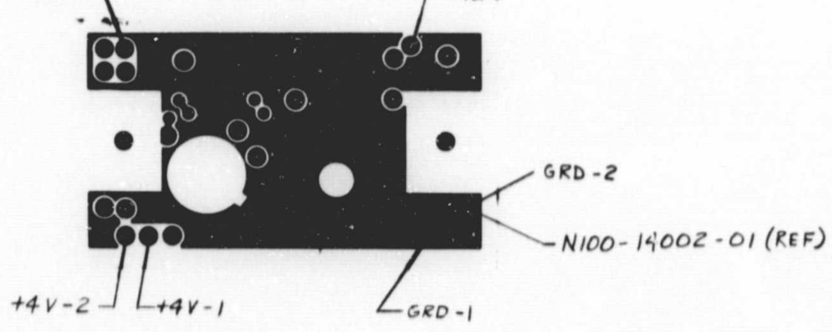

VIEW C-C

A

QTY PER MAJOR ASSY

REVISIONS				
ZONE	LTR	DESCRIPTION	DATE	APPROVED
	A	ADDED ITEM 19	1-24-67 1/24/67	DWG BY G LUNG CHK BY R.W. Baynat

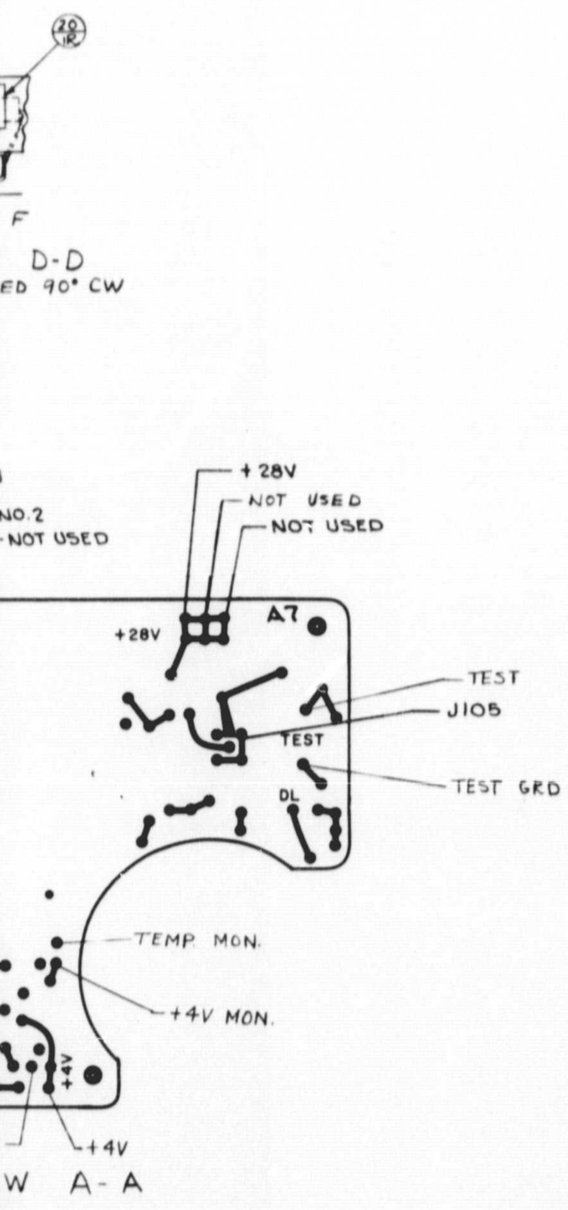

N100-10200 A

QUANTITY REQUIRED						ZONE	ITEM	CODE IDENT NO.	PART OR IDENTIFYING NO.	NOMENCLATURE OR DESCRIPTION	MATERIAL AND FINISH OR NOTE OR REF DES
							2				
							1		SEE SHT 1		

LIST OF MATERIAL OR PARTS LIST

QTY PER MAJOR ASSY	NEXT ASSEMBLY	USED ON

UNLESS OTHERWISE SPECIFIED
TOLERANCES ON:
2 PLACE DEC ±.03 3 PLACE DEC ±.010
ANGLES
MACHINED ±0° 15' FORMED ±1° SHEARED ±0° 30'
HOLE TOLERANCE PER AND 10387
SURFACE ROUGHNESS PER MIL-STD-10
MACHINED SURFACE FINISH 125 ✓
DIMENSIONING AND TOLERANCING PER MIL-STD-8
ECCENTRICITY BETWEEN ANY DIA(S) ON THE SAME CENTERLINE SHALL NOT EXCEED .010 TOTAL INDICATOR READING
ALL DIM. ARE IN INCHES & INCLUDE APPLIED FINISH
WELD SYMBOLS PER MIL-STD-19
RIVET CODE PER NAS 523
THREADS PER MIL-S-7742
MARK PER MIL-STD-130
REMOVE ALL BURRS AND SHARP EDGES
SPECIFICATIONS:

PROJ ENGR		
COMP ENGR		
MAT'L / PROC ENGR		
STRUCT / WTS		
GROUP APP	B J Jones	6-1-66
CHECKED BY	W. Boynell	8/1/66
DRAWN BY	CARTWRIGHT	7-28-66
ENGR GROUP	O-71100	

LTV RESEARCH CENTER

HARNESS, WIRING

SIZE	CODE IDENT NO.	
D	11817	N100-10200

SCALE: NONE REV. A SHEET 2 OF 2

LTVRC-610

8 7 6 5 4

D

C

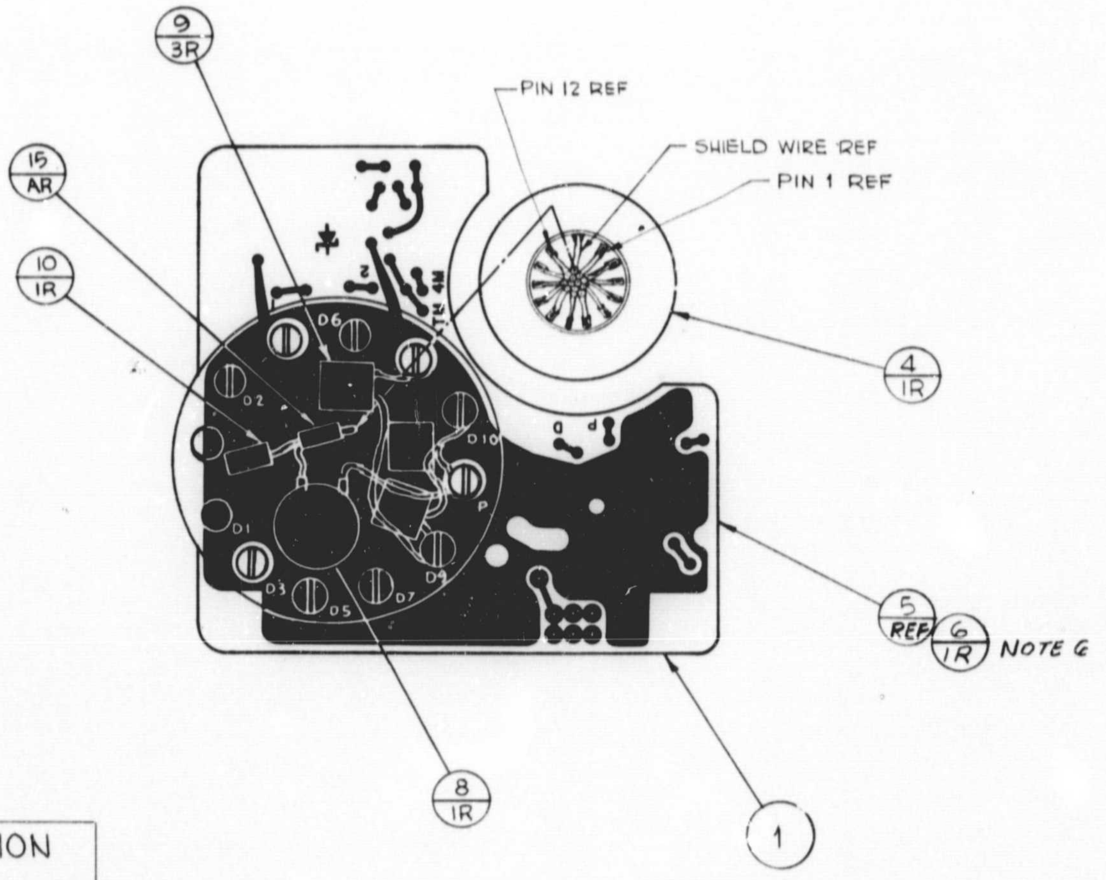

B

INTERCONNECTION CHART	
ITEM 4 WIRE FROM PIN NO.	CONNECTS TO
1 (VIO.)	D1
2 (BLK)	D3
3 (GRY)	D5
4 (VIO)	D7
5 (BLK)	D9
6 (GRY)	A7- P
7 (VIO.)	A7- D
8 (BLK)	D8
9 (GRY)	D6
10 (VIO)	D4
11 (BLK)	D2
12 (GRY)	K
SHIELD(BLK)	JCT. ITEMS 8 & 10

A

QTY PER MAJOR ASSY	NEXT ASS
	N100-1

REVISIONS				
ZONE	LTR	DESCRIPTION	DATE	APPROVED
	A	1. ADDED ITEM 6 TO L/M & F/D 2. ITEM 5 WAS QTY OF 1 IN F/D & L/M 3. ADDED NOTE 6.	8-18-66 8-31-66	CARTWRIGHT jkj

NOTES:

1. SOLDER & ASSEMBLE PER NASA SPEC NPC 200-4
2. CENTRALAB, DIV. OF GLOBE UNION INC., MILWAUKEE, WIS.
3. ITEMS 8 & 10 LEADS TO BE PIGTAILED WITH EXISTING SHIELD WIRE FROM ITEM 4 & THEN COVERED AT PIGTAIL WITH ITEM 15 PER SPEC
4. INSTALL ITEMS 8, 9 & 10 ON ITEM 5 APPROX AS SHOWN. CONNECT EXISTING WIRES ON ITEM 4 TO ITEM 5 PER INTERCONNECTION CHART
5. MAKE WIRE LONG ENOUGH TO ALLOW BOARD TO BE MOVED ABOVE AND OVER ITEM 4 IN MOUNTED CONFIGURATION.
6. ITEM 5 IS PART OF ITEM 6. COMPLETE DETAIL OF ITEM 6 OMITTED FOR CLARITY

QUANTITY REQUIRED -01	ZONE	ITEM	CODE IDENT NO.	PART OR IDENTIFYING NO.	NOMENCLATURE OR DESCRIPTION	MATERIAL AND FINISH OR NOTE OR REF DES
AR		15		RNF-100-1/8T	TUBING, SHRINK FIT	RAYCLAD TUBES INC, REDWOOD CITY, CALIF.
		14				
		13				
		12				
		11				
1		10		RC07GF106J	RESISTOR	MIL-R-11 R1
3		9		CK06CW332K	CAPACITOR	MIL-C-11015 C6, C7, C8
1		8		DD30-102	CAPACITOR	NOTE 2 C9
		7				
1		6		N100-10200-01	WIRE HARNESS	
REF		5		N100-15000-01	COMP BD ASSY	
1		4		N100-10001-01	PHOTOMULTIPLIER ASSY	
REF		3		N100-10900	DIAGRAM	
		2				
		1		-01	INTERCONNECT ASSY	

LIST OF MATERIAL OR PARTS LIST

QTY PER MAJOR ASSY	NEXT ASSEMBLY	USED ON
	N100-10000	N100-00000

UNLESS OTHERWISE SPECIFIED
TOLERANCES ON:
2 PLACE DEC ±.02 3 PLACE DEC ±.010
ANGLES
MACHINED ±0° 15' FORMED ±1° SHEARED ±0° 30'
HOLE TOLERANCE PER AND 10387
SURFACE ROUGHNESS PER MIL-STD-10
125 ✓ MACHINED SURFACE FINISH
DIMENSIONING AND TOLERANCING PER MIL-STD-8
ECCENTRICITY BETWEEN ANY DIA(S) ON THE SAME CENTERLINE SHALL NOT EXCEED .010 TOTAL INDICATOR READING
ALL DIM. ARE IN INCHES & INCLUDE APPLIED FINISH
WELD SYMBOLS PER MIL-STD-19
RIVET CODE PER NAS 523
THREADS PER MIL-S-7742
MARK PER MIL-STD-130
REMOVE ALL BURRS AND SHARP EDGES
SPECIFICATIONS:

PROJ ENGR		
COMP ENGR		
MAT'L/PROC ENGR		
STRUCT / WTS		
GROUP APP		9/1/66
CHECKED BY		8/28/66
DRAWN BY	CARTWRIGHT	7-25-66
ENGR GROUP	0-71100	

LTV RESEARCH CENTER

INTERCONNECT ASSY

SIZE	CODE IDENT NO.	
D	11817	N100-10300

SCALE: 2/1 REV. A SHEET

N100-10300 A

2

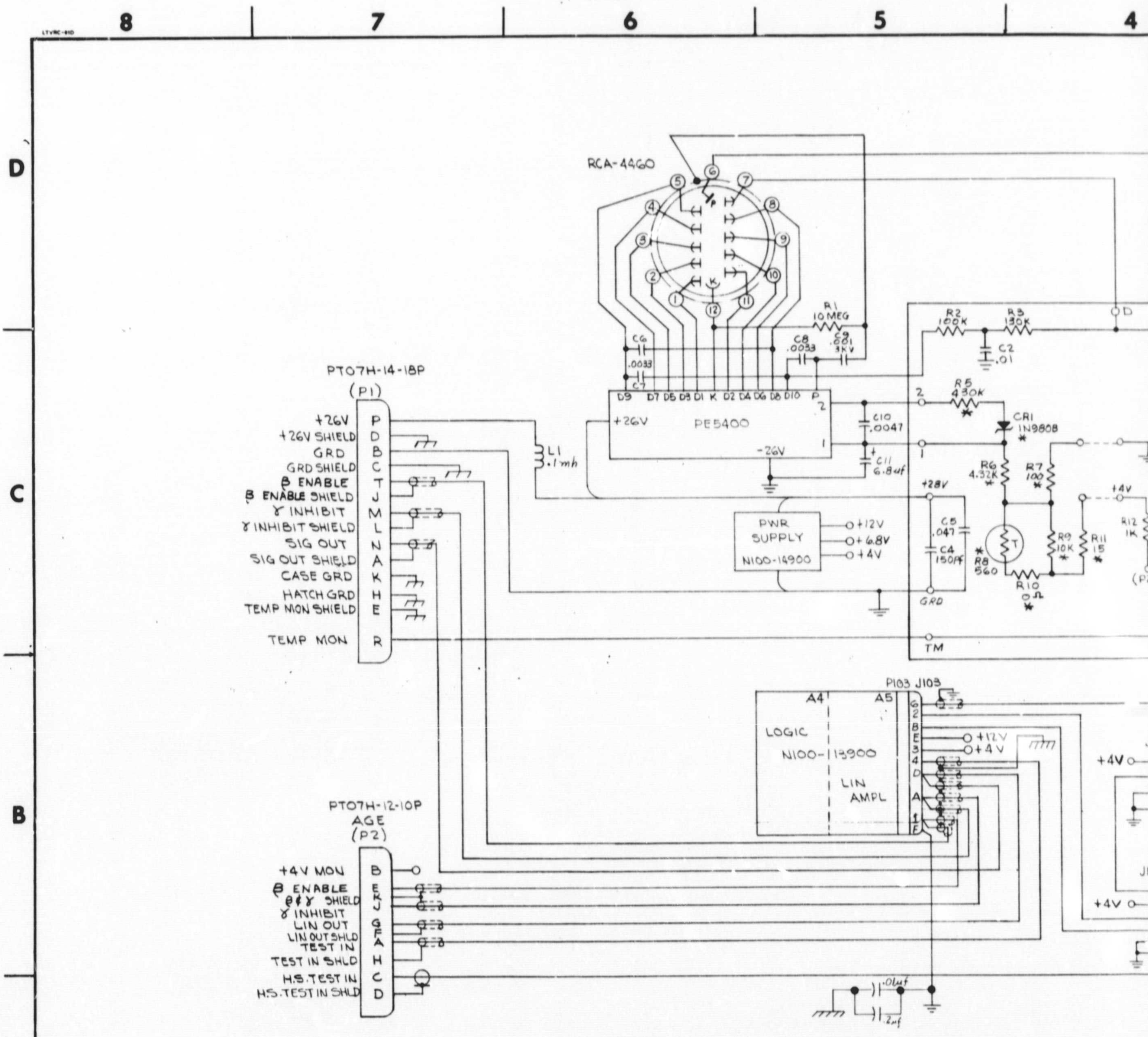

A

2. (*) INDICATES FACTORY SELECT COMPONENTS
1. UNLESS OTHERWISE SPECIFIED:
ALL RESISTANCES ARE IN OHMS, 1/8W, 5%
ALL CAPACITANCES ARE IN uf
NOTES:

QTY PER MAJOR ASSY

1

REVISIONS				
ZONE	LTR	DESCRIPTION	DATE	APPROVED
	A	REVISED & REDRAWN	5-?-66	W.R.C.
	B	CHANGED SHIELD GROUNDING CONFIG. TO CONFORM TO DWG N100-10200.	1-24-67 1/24/67	DWN. BY G. Lowe CHK. BY RB Bryant

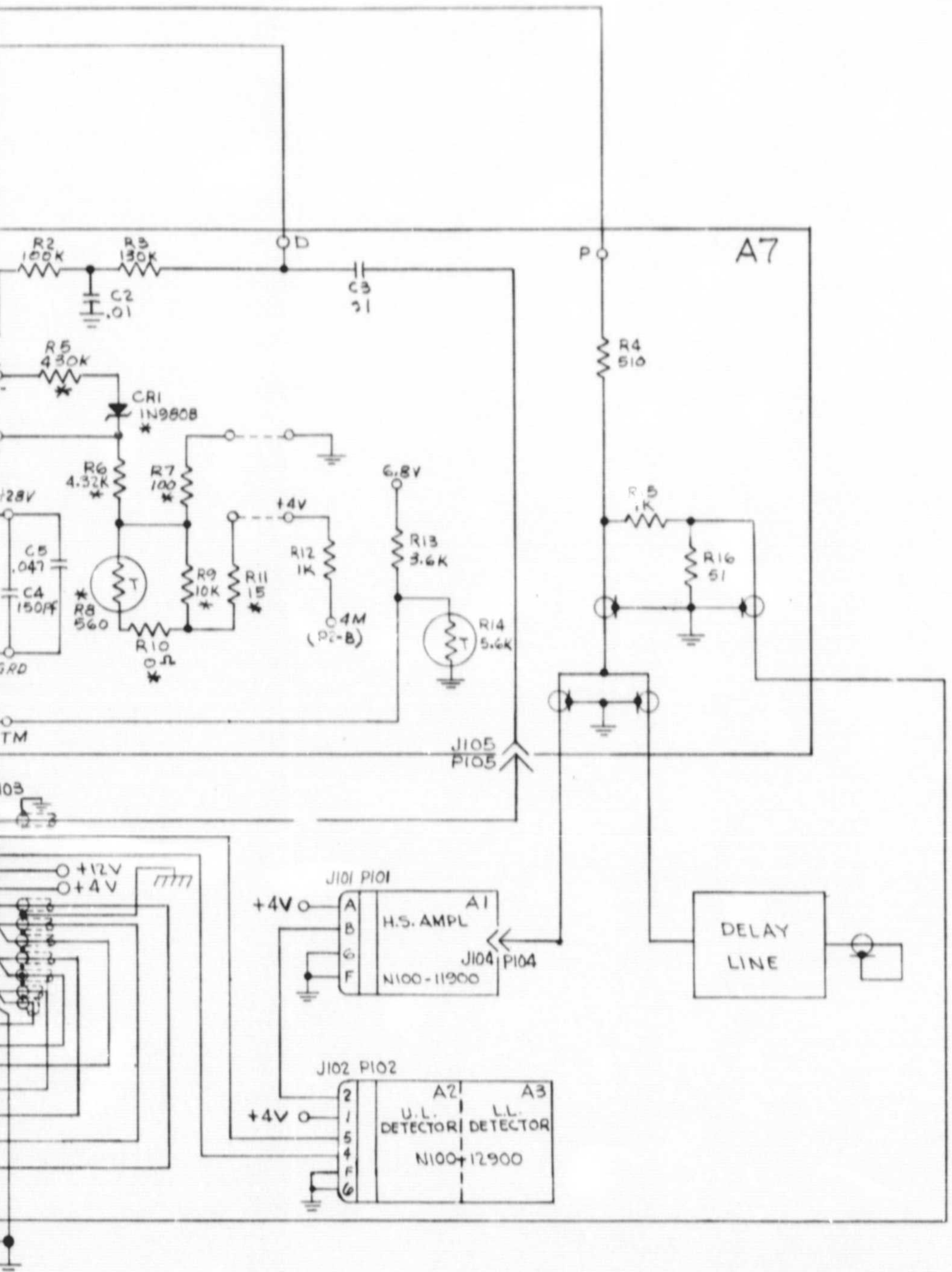

						2				
						1				
QUANTITY REQUIRED					ZONE	ITEM	CODE IDENT NO.	PART OR IDENTIFYING NO.	NOMENCLATURE OR DESCRIPTION	MATERIAL AND FINISH OR NOTE OR REF DES

LIST OF MATERIAL OR PARTS LIST

QTY PER MAJOR ASSY	NEXT ASSEMBLY	USED ON
	N100-10000	N100-00000

UNLESS OTHERWISE SPECIFIED
TOLERANCES ON:
2 PLACE DEC ±.03
3 PLACE DEC ±.010
ANGLES
MACHINED ±0° 15'
FORMED ±1°
SHEARED ±0° 30'
HOLE TOLERANCE PER ANC 11-27
SURFACE ROUGHNESS PER MIL-STD-10
MACHINED SURFACE FINISH 125✓
DIMENSIONING AND TOLERANCING PER MIL-STD-8
ECCENTRICITY BETWEEN ANY DIA(S) ON THE SAME CENTERLINE SHALL NOT EXCEED .010 TOTAL INDICATOR READING
ALL DIM. ARE IN INCHES & INCLUDE APPLIED FINISH
WELD SYMBOLS PER MIL-STD-19
RIVET CODE PER NAS 523
THREADS PER MIL-S-7742
MARK PER MIL-STD-130
REMOVE ALL BURRS AND SHARP EDGES
SPECIFICATIONS:

PROJ ENGR		
COMP ENGR		
MAT'L PROC-ENGR		
STRUCT / WTS		
GROUP APP	B.J. Farmer	3-29-66
CHECKED BY	D. Chappell	3-29-66
DRAWN BY	CARTWRIGHT	2-28-66
ENGR GROUP	0-71100	

LTV RESEARCH CENTER

DIAGRAM

B-γ SPECTROMETER

SIZE	CODE IDENT NO.	
D	11817	N100-10900

SCALE: NONE REV. B SHEET

N100-10900 B

LTVRC-610

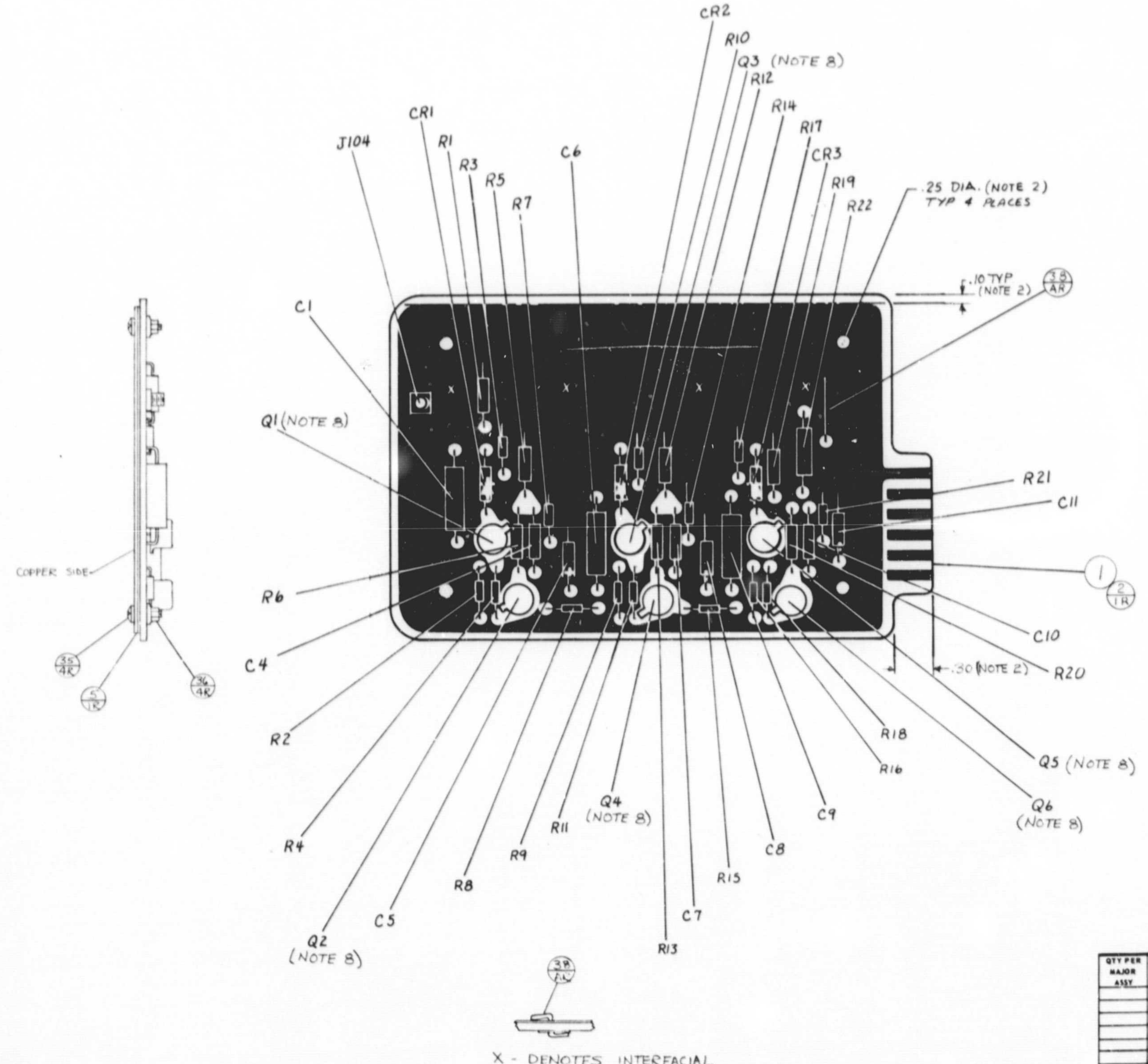

X - DENOTES INTERFACIAL
CONNECTION

QTY PER MAJOR ASSY	NEXT ASSEMBLY
	N100-0000

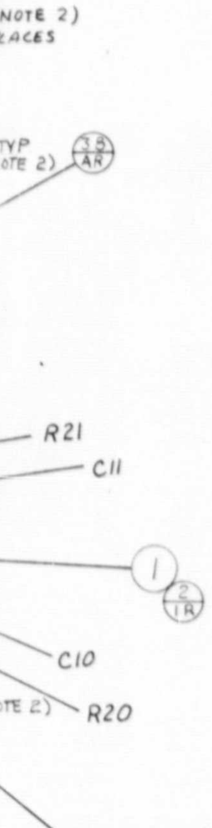

NOTES:
1. SOLDER & ASSEMBLE PER NPC200-4
2. CONFORMAL COAT PER LTV GARLAND SPEC 408-00060; MASK OFF AREA SHOWN
3. TEST BOARD ASSY PER QCB-TP-003
4. SEALECTRO CORP, MAMARONECK, N.Y.
5. ELECTRO MATERIALS CORP., SAN DIEGO, CALIF
6. ERIE TECHNOLOGIC PRODUCTS; ERIE, PA.
7 TEXAS INSTRUMENTS INC; DALLAS, TEXAS
8. MOUNT BOTTOM OF TRANSISTORS .02 $^{+.02}_{-.00}$ FROM BOARD.

REVISIONS

ZONE	LTR	DESCRIPTION	DATE	APPROVED
	A	INCOPORATED EO. NO. N100.15	1-17-67 1/24/67	S H Lowe

						40					
						39					
				AR		38		24 AWG, SOFT, TINNED	WIRE, BARE	QQ-W-343, TYPE S	
						37					
				4		36		MS21042-L04	NUT		
				4		35		NAS600-5	SCREW		
						34					
						33					
				1		32		50-751-0000-26	CONNECTOR	NOTE 4	J104
						31					
				3		30		1N916	DIODE	JEDEC	CR1, CR2, CR3
						29					
				3		28		2N3304	TRANSISTOR	JEDEC	Q2, Q4, Q6
				3		27		2N709	TRANSISTOR	JEDEC	Q1, Q3, Q5
						26					
				3		25		EL50AT224K	CAPACITOR	NOTE 5	C1, C6, C9
						24					
				3		23		8005-000-C0G0-100K	CAPACITOR	NOTE 6	C4, C7, C10
						22					
				3		21		CS13BB685K	CAPACITOR	MIL-C-26655	C5, C8, C11
						20					
				1		19		TM 1/8 - 220 Ω	SENSISTOR	NOTE 7	R22
						18					
				1		17		RN55D68K1F	RESISTOR	MIL-R-10509	R19
				3		16		RN55D2000F	RESISTOR	MIL-R-10509	R6, R13, R20
				3		15		RN55D51K1F	RESISTOR	MIL-R-10509	R1, R5, R12
						14					
				1		13		RC05GF622J	RESISTOR	MIL-R-11	R16
				1		12		472J	↕	↕	R9
				2		11		101J			R8, R15
				2		10		241J			R7, R14, R21
				3		9		511J			R4, R11, R18
				3		8		471J			R3, R10, R17
				1		7		RC05GF392J	RESISTOR	MIL-R-11	R2
						6					
				1		5		N100-10100-01	SHIELD ASSY		
				REF		4		N100-11900	SCHEMATIC		
						3					
				1		2		N100-11001-01	BOARD		
						1		-01	BD ASSY		A1
				-01	ZONE	ITEM	CODE IDENT NO.	PART OR IDENTIFYING NO.	NOMENCLATURE OR DESCRIPTION	MATERIAL AND FINISH OR NOTE OR REF DES	
QUANTITY REQUIRED											

LIST OF MATERIAL OR PARTS LIST

A N100-11000

QTY PER MAJOR ASSY	NEXT ASSEMBLY	USED ON
	N100-00000	N100-00000

UNLESS OTHERWISE SPECIFIED
TOLERANCES ON:
2 PLACE DEC ±.02 3 PLACE DEC ±.010
ANGLES
MACHINED ±0° 15' FORMED ±1° SHEARED ±0° 30'
HOLE TOLERANCE PER AND 10387
SURFACE ROUGHNESS PER MIL-STD-10
MACHINED SURFACE FINISH 125/
DIMENSIONING AND TOLERANCING PER MIL-STD-8
ECCENTRICITY BETWEEN ANY DIA(S) ON THE SAME CENTERLINE SHALL NOT EXCEED .010 TOTAL INDICATOR READING
ALL DIM. ARE IN INCHES & INCLUDE APPLIED FINISH
WELD SYMBOLS PER MIL-STD-19
RIVET CODE PER NAS 523
THREADS PER MIL-S-7742
MARK PER MIL-STD-130
REMOVE ALL BURRS AND SHARP EDGES
SPECIFICATIONS:

PROJ ENGR		
COMP ENGR		
MAT'L/PROC ENGR		
STRUCT / WTS		
GROUP APP	Farmer	6-22-66
CHECKED BY	R. Bogwell	6/24/66
DRAWN BY	Cartwright	6-18-66
ENGR GROUP	0-71100	

LTV RESEARCH CENTER

COMP BD ASSY
HIGH SPEED AMPL
A1

SIZE	CODE IDENT NO.	
D	**11817**	N100-11000

SCALE: 2/1 REV. A SHEET

LTVRC-810

8 7 6 5 4

D

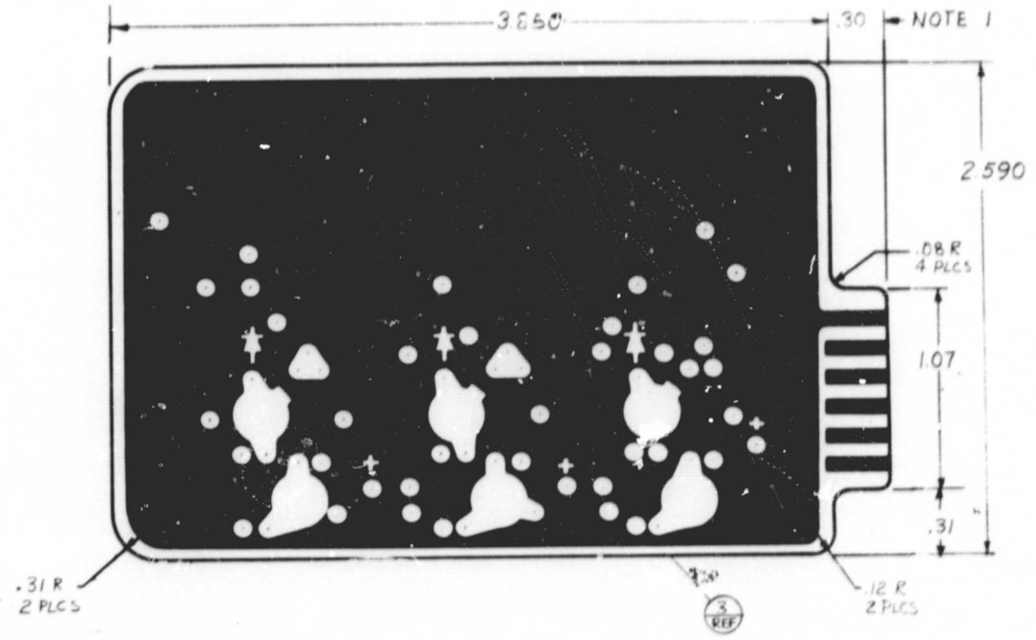

C

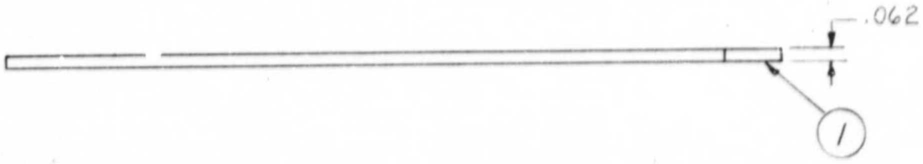

B

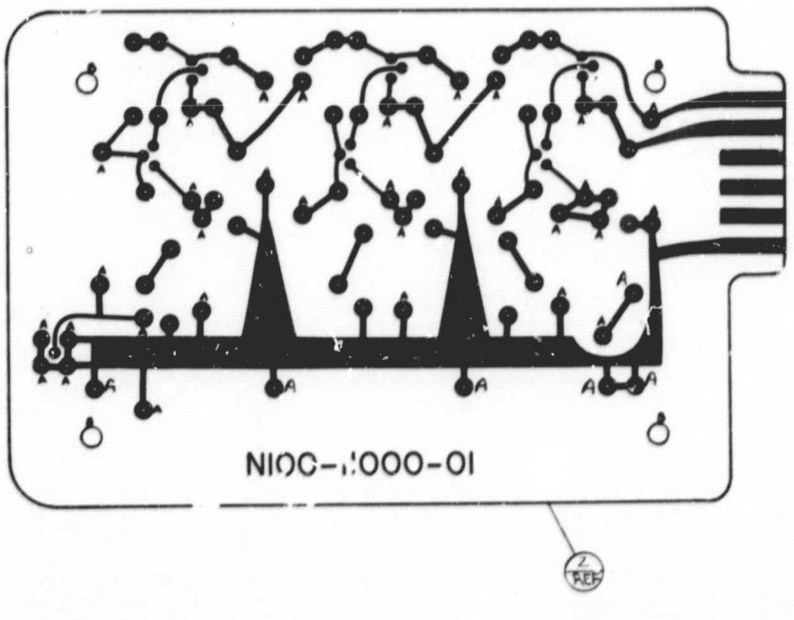

CODE	HOLE SIZE (INCHES)
NO CODE	.025 DIA.
A	.031 DIA.
B	.128 DIA.

A

QTY PER MAJOR ASSY	NEXT ASSEMBL
	N100-110

1

NOTES:
1. **RHODIUM** PLATE CONNECTOR AREA PER MIL-STD-275.
2. FABRICATE AND SOLDER COAT PER MSFC-STD-154.

REVISIONS

ZONE	LTR	DESCRIPTION	DATE	APPROVED
	A	1. INCREASE HOLE SIZE TO .031 6 PLCS (WAS .025) 2 CHANGE VIEW OF "B" SIZE HOLES	7/14/66 7/14/66	DWG BY R G Bagwell CHK [illegible] APP BY [illegible]

QUANTITY REQUIRED				ZONE	ITEM	CODE IDENT NO.	PART OR IDENTIFYING NO.	NOMENCLATURE OR DESCRIPTION	MATERIAL AND FINISH OR NOTE OR REF DES
			REF		3		N100-11006-01	ARTWORK	
			REF		2		N100-11005-01	ARTWORK	
					1		-01	BOARD	.062 THK-2/2OZ. MIL-P-13949 GEE
			-01						

LIST OF MATERIAL OR PARTS LIST

QTY PER MAJOR ASSY	NEXT ASSEMBLY	USED ON
	N100-11000	N100-00000

UNLESS OTHERWISE SPECIFIED
TOLERANCES ON:
2 PLACE DEC ±.03 3 PLACE DEC ±.010
ANGLES
MACHINED ±0° 5' FORMED ±1° SHEARED ±0° 30'
HOLE TOLERANCE PER AND 10387
SURFACE ROUGHNESS PER MIL-STD-10
MACHINED SURFACE FINISH 125✓
DIMENSIONING AND TOLERANCING PER MIL-STD-8
ECCENTRICITY BETWEEN ANY DIA(S) ON THE SAME CENTERLINE SHALL NOT EXCEED .010 TOTAL INDICATOR READING
ALL DIM. ARE IN INCHES & INCLUDE APPLIED FINISH
WELD SYMBOLS PER MIL-STD-19
RIVET CODE PER NAS 523
THREADS PER MIL-S-7742
MARK PER MIL-STD-130
REMOVE ALL BURRS AND SHARP EDGES
SPECIFICATIONS:

PROJ ENGR		
COMP ENGR		
MAT'L/PROC ENGR		
STRUCT / WTS		
GROUP APP	[illegible]	
CHECKED BY	[illegible]	6/23/66
DRAWN BY	R.G. BAGWELL	6/22/66
ENGR GROUP	0-71100	

LTV RESEARCH CENTER

BOARD
HIGH SPEED AMPL
A1

SIZE	CODE IDENT NO.	
D	11817	N100-11001
SCALE 2/1	REV. A	SHEET

N100-11001 A

REVISIONS				
ZONE	LTR	DESCRIPTION	DATE	APPROVED
4	A	Revised Pin Locations of P101	5-11-66	

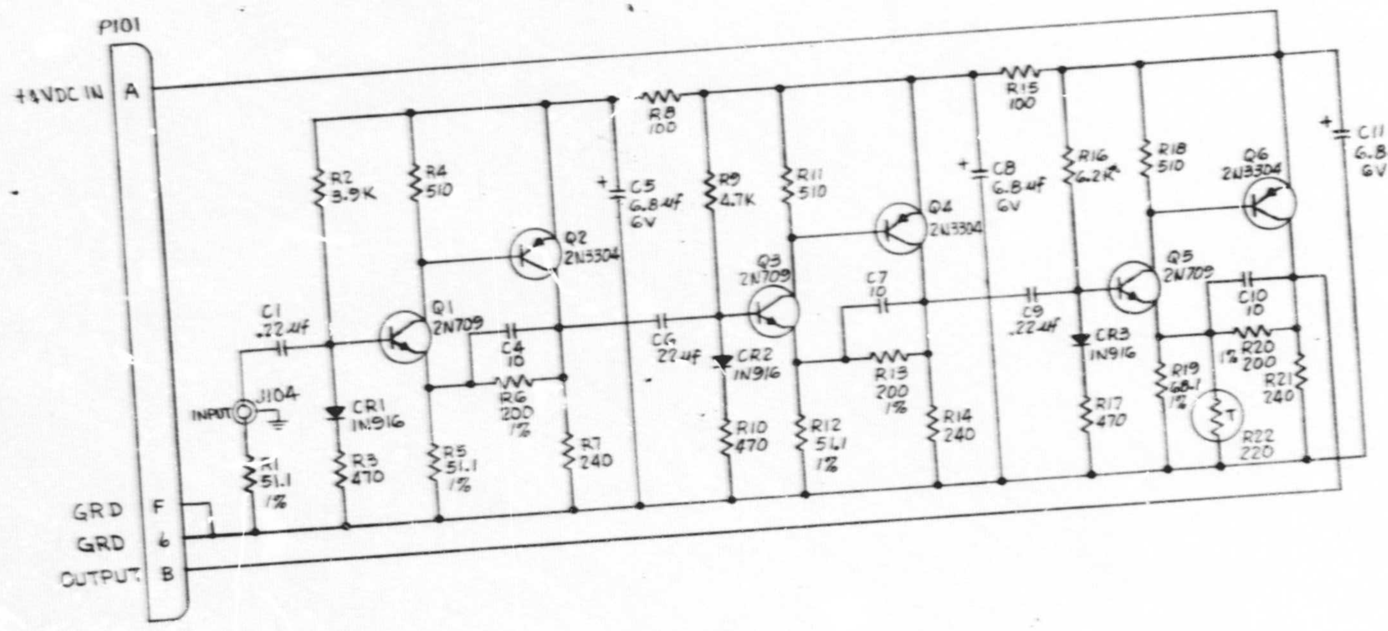

1. UNLESS OTHERWISE SPECIFIED:
ALL RESISTANCES ARE IN OHMS, 1/8 W, 5%
ALL CAPACITANCES ARE IN PF

NOTES:

QUANTITY REQUIRED	ZONE	ITEM	CODE IDENT NO.	PART OR IDENTIFYING NO.	NOMENCLATURE OR DESCRIPTION	MATERIAL AND FINISH OR NOTE OR REF DES

LIST OF MATERIAL OR PARTS LIST

QTY PER MAJOR ASSY	NEXT ASSEMBLY	USED ON
	N100-11300	N100-00000

UNLESS OTHERWISE SPECIFIED

3-25-66
3-23-66
0-71100

LTV RESEARCH CENTER

SCHEMATIC
HIGH SPEED AMPL
A1

SIZE	CODE IDENT NO.	
C	11817	N100-11900

SCALE NONE REV. A SHEET

N100-11900 A

LTVEC-910

8 7 6 5 4

D C B A

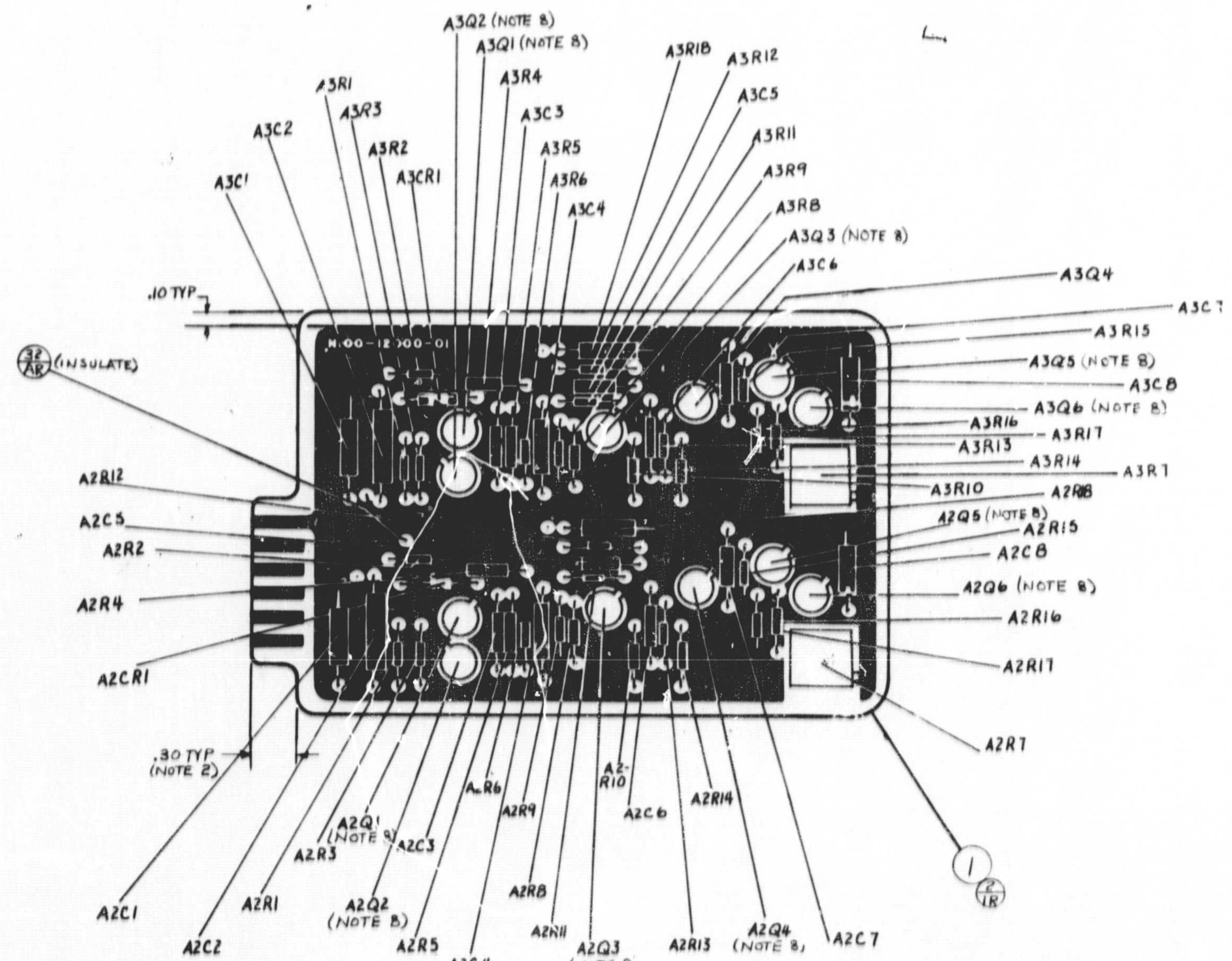

X- DENOTES INTERFACIAL CONNECTION

QTY PER MAJOR ASSY

N10-0000

NOTES:
1. SOLDER & ASSEMBLE PER NPC200-4
2. CONFORMAL COAT PER LTV-GARLAND SPEC 408-00060; MASK OFF AREA SHOWN
3. TEST BD ASSY PER QCB-TP-003
4. ELECTRO MATERIALS CORP., SAN DIEGO, CALIFORNIA
5. ERIE TECHNOLOGICAL PRODUCTS, INC. ERIE, PA.
6. TEXAS INSTRUMENTS, INC. DALLAS, TEX
7. WESTON INSTRUMENTS INC. ARCHBALD, PA.
8. MOUNT BOTTOM OF TRANSISTORS .02$^{+.02}_{-.00}$ FROM BOARD.

REVISIONS

ZONE	LTR	DESCRIPTION	DATE	APPROVED
	A	INCOPORATED EO. NO. N100.8	1-4-67 1/24/67	J. Lowe CK BY RD Reynolds

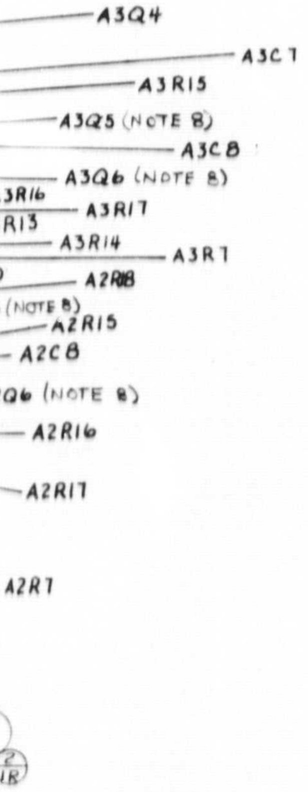

QUANTITY REQUIRED					ZONE	ITEM	CODE IDENT NO.	PART OR IDENTIFYING NO.	NOMENCLATURE OR DESCRIPTION	MATERIAL AND FINISH OR NOTE OR REF DES
			-02	-01						
				2		40		EL50AT473K	CAPACITOR	NOTE 4 A2C1, A3C1
				2		39		EL50AT224K		NOTE 4 A2C2, A3C2
				2		38		EL50AT104K		NOTE 4 A2C4, A3C4
				2		37		CS13BB685K		MIL-C-26655 A2C8, A3C8
				4		36		8005-000-C0G0-100K		NOTE 5 A2C3,C6; A3C3,C6
				2		35		" " " -101K		NOTE 5 A2C7, A3C7
				2		34		" " -W5R0-102K	CAPACITOR	NOTE 5 A2C5, A3C5
						33				
				AR		32		24 AWG, SOFT, TINNED	WIRE, BARE	QQ-W-343, TYPE S
						31				
				2		30		1N916	DIODE	JEDEC A2CR1, A3CR1
						29				
						28				
				4		27		2N3304	TRANSISTOR	JEDEC A2Q2,6 A3Q2,6
				8		26		2N709	TRANSISTOR	JEDEC A2Q1,3,4,5; A3Q1,3,4,5
						25				
						24				
				2		23		TM 1/8 180Ω 10%	RESISTOR	NOTE 6 A2R18, A3R18
				2		22		201-00-5K	POTENTIOMETER	NOTE 7 A2R7, A3R7
				1		21		RN55D4750F	RESISTOR	MIL-R-10509 A3R5
				1		20		RN55D2430F	RESISTOR	MIL-R-10509 A2R5
				2		19		RN55D51R1F		MIL-R-10509 A2R4, A3R4
				2		18		RC05GF183J		MIL-R-11 A2R9, A3R9
				2		17		153J		A2R8, A3R8
				2		16		103J		A2R15, A3R15
				2		15		752J		A2R13, A3R13
				2		14		622J		A2R1, A3R1
				2		13		102J		A2R16, A3R16
				2		12		621J		A2R10, A3R10
				2		11		561J		A2R14, A3R14
				2		10		511J		A2R3, A3R3
				2		9		471J		A2R2, A3R2
				2		8		331J		A2R12, A3R12
				2		7		241J		A2R6, A3R6
				2		6		221J		A2R17, A3R17
				2		5		RC05GF820J	RESISTOR	MIL-R-11 A2R11, A3R11
						4				
				REF		3		N100-12900	SCHEMATIC	
				1		2		N100-12001-01	BOARD	
						1		-01	BD ASSY	A2, A3

LIST OF MATERIAL OR PARTS LIST

QTY PER MAJOR ASSY	NEXT ASSEMBLY	USED ON
	N100-00000	N100-00000

UNLESS OTHERWISE SPECIFIED
TOLERANCES ON:
2 PLACE DEC ±.02 3 PLACE DEC ±.010
ANGLES
MACHINED ±0° 15' FORMED ±1° SHEARED ±0° 30'
HOLE TOLERANCE PER AND 10387
SURFACE ROUGHNESS PER MIL-STD-10
MACHINED SURFACE FINISH ✓
DIMENSIONING AND TOLERANCING PER MIL-STD-8
ECCENTRICITY BETWEEN ANY DIA(S) ON THE SAME CENTERLINE SHALL NOT EXCEED .010 TOTAL INDICATOR READING
ALL DIM. ARE IN INCHES & INCLUDE APPLIED FINISH
WELD SYMBOLS PER MIL-STD-19
RIVET CODE PER NAS 523
THREADS PER MIL-S-7742
MARK PER MIL-STD-130
REMOVE ALL BURRS AND SHARP EDGES
SPECIFICATIONS:

PROJ ENGR		
COMP ENGR		
MAT'L/PROC ENGR		
STRUCT	DTS	
GROUP APP	B. J. Irvine	6/27/66
CHECKED BY	R. Boswell	6/24/66
DRAWN BY	Cartwright	4-25-66
ENGR GROUP	0-71100	

LTV RESEARCH CENTER

COMP BD ASSY
ULD & LLD
A2 & A3

SIZE D
CODE IDENT NO. 11817
N100-12000
SCALE: 2/1
REV. A
SHEET

N100-12000 A

2

8 7 6 5

D

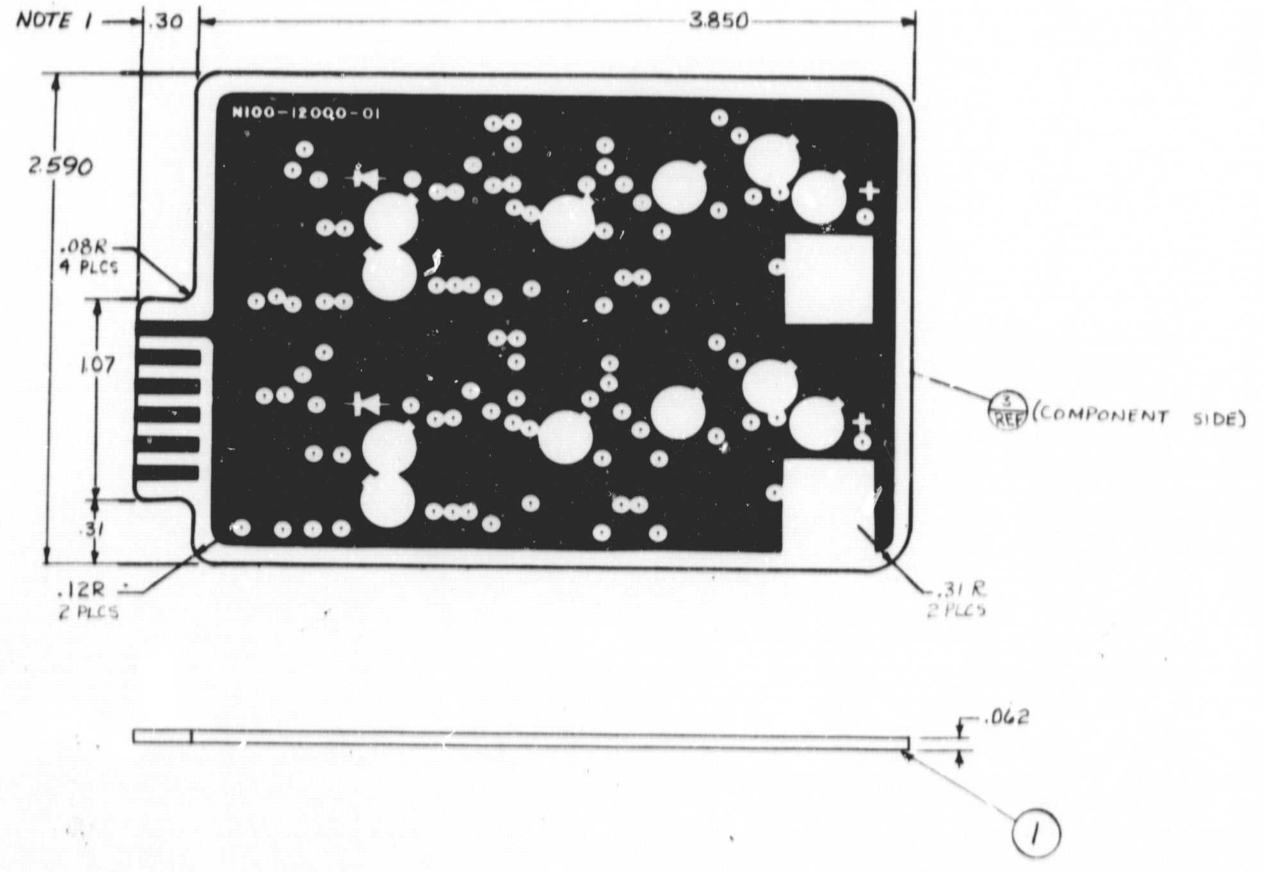

C

B

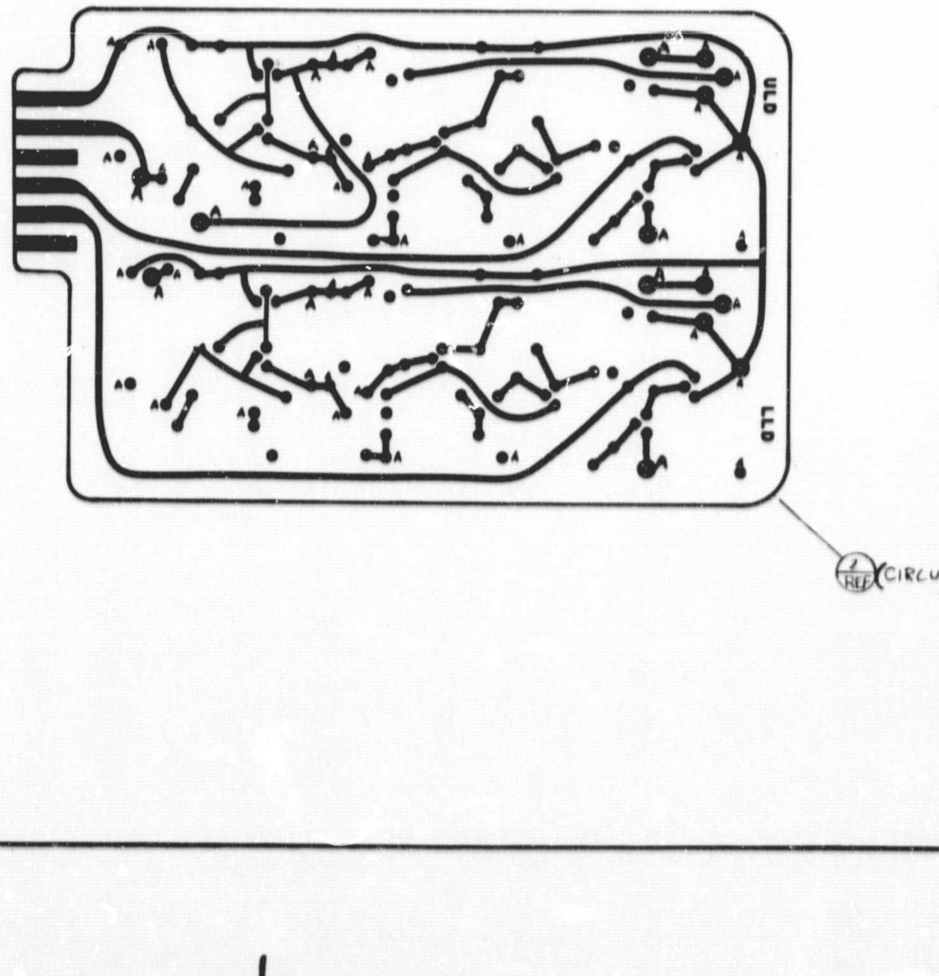

CODE	HOLE SIZE (INCHES)
NO CODE	.025 DIA.
A	.031 DIA.

A

QTY PL. / MAJOR ASSY

4 3 2 1

NOTES:
1. RHODIUM PLATE CONNECTOR AREA PER MIL-STD-275.
2. FABRICATE AND SOLDER PLATE PER MSFC-STD-154.

REVISIONS				
ZONE	LTR	DESCRIPTION	DATE	APPROVED
	A	INCREASED HOLE SIZE TO .031 11 PLACES. (WAS .025)	7/18/66 18 Jul 66 7/18/66	DWG BY R G Bagwell CHK BY H. Forsythe APP BY B J Farmer

D

IENT SIDE)

C

B

N100-12001 A

HOLE SIZES (INCHES)
.025 DIA.
.031 DIA.

IDE)

			REF		3		N100-12006-01	ARTWORK	
			REF		2		N100-12005-01	ARTWORK	
					1		-01	BOARD	.062 THK-2/2OZ. MIL-P-13949 GEE
			-01						
QUANTITY REQUIRED				ZONE	ITEM	CODE IDENT NO.	PART OR IDENTIFYING NO.	NOMENCLATURE OR DESCRIPTION	MATERIAL AND FINISH OR NOTE OR REF DES

LIST OF MATERIAL OR PARTS LIST

QTY PER MAJOR ASSY	NEXT ASSEMBLY	USED ON
	N100-12000	N100-00000

UNLESS OTHERWISE SPECIFIED
TOLERANCES ON:
2 PLACE DEC ±.02
3 PLACE DEC ±.010
ANGLES
MACHINED ±0° 15' FORMED ±1° SHEARED ±0° 30'
HOLE TOLERANCE PER AND 10387
SURFACE ROUGHNESS PER MIL-STD-10
MACHINED SURFACE FINISH 125✓
DIMENSIONING AND TOLERANCING PER MIL-STD-8
ECCENTRICITY BETWEEN ANY DIA(S) ON THE SAME CENTERLINE SHALL NOT EXCEED .010 TOTAL INDICATOR READING
ALL DIM ARE IN INCHES & INCLUDE APPLIED FINISH
WELD SYMBOLS PER MIL-STD-19
RIVET CODE PER NAS 523
THREADS PER MIL-S-7742
MARK PER MIL-STD-130
REMOVE ALL BURRS AND SHARP EDGES
SPECIFICATIONS:

PROJ ENGR		
COMP ENGR		
MAT'L PROC ENGR		
STRUCT / WTS		
GROUP APP	B. J. Farmer	6-27-66
CHECKED BY		6-23-66
DRAWN BY	R.G. Bagwell	6/22/66
ENGR GROUP	O-71100	

LTV RESEARCH CENTER

BOARD
ULD & LLD
A2 & A3

SIZE	CODE IDENT NO.	
D	11817	N100-12001
SCALE: 2/1	REV. A	SHEET

A

2

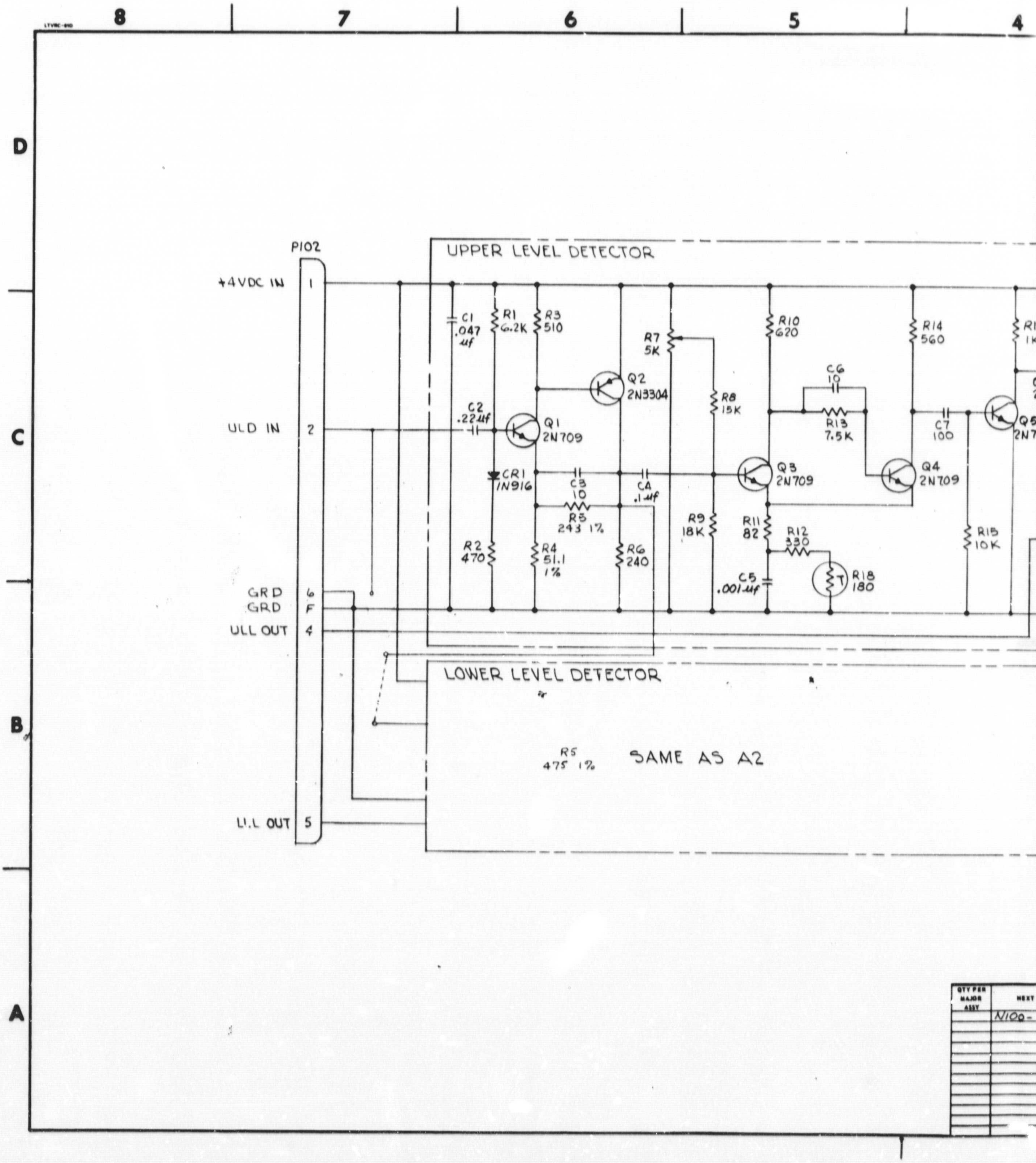
8
7
6
5
4
D
C
B
A
P102
+4VDC IN
ULD IN
GRD
GRD
ULL OUT
LLL OUT
1
2
6
F
4
5
UPPER LEVEL DETECTOR
C1 .047 uf
R1 6.2K
R3 510
Q2 2N3304
R7 5K
R8 15K
R10 620
R14 560
C6 10
R13 7.5K
C7 100
Q5
C2 .22uf
Q1 2N709
CR1 1N916
C3 10
R5 243 1%
C4 .1uf
Q3 2N709
Q4 2N709
R2 470
R4 51.1 1%
R6 240
R9 18K
R11 82
R12 330
C5 .001uf
R18 180
R15 10K
LOWER LEVEL DETECTOR
R5 475 1%
SAME AS A2
QTY PER MAJOR ASSY
NEXT
N100-

1

4 3 2 1

NOTES:
1. UNLESS OTHERWISE SPECIFIED:
ALL RESISTANCES ARE IN OHMS, 1/8W, 5%
ALL CAPACITANCES ARE IN Pf
2. TO BE OF FACTORY SELECTED VALUE

REVISIONS

ZONE	LTR	DESCRIPTION	DATE	APPROVED
7	A	1. REVISED PIN LOCATION - P102	5-11-66	
C6		2. R5-A2 WAS FACTORY SELECT VALUE		
B6		3. R5-A3 WAS FACTORY SELECT VALUE		
B7		4. REMOVED LLD IN FROM P102		
BC67		5. ADDED JUMPER WIRE SYSTEM FOR LLD IN		
C1		6. ADDED CONNECTION- Q5 EMITTER		

D

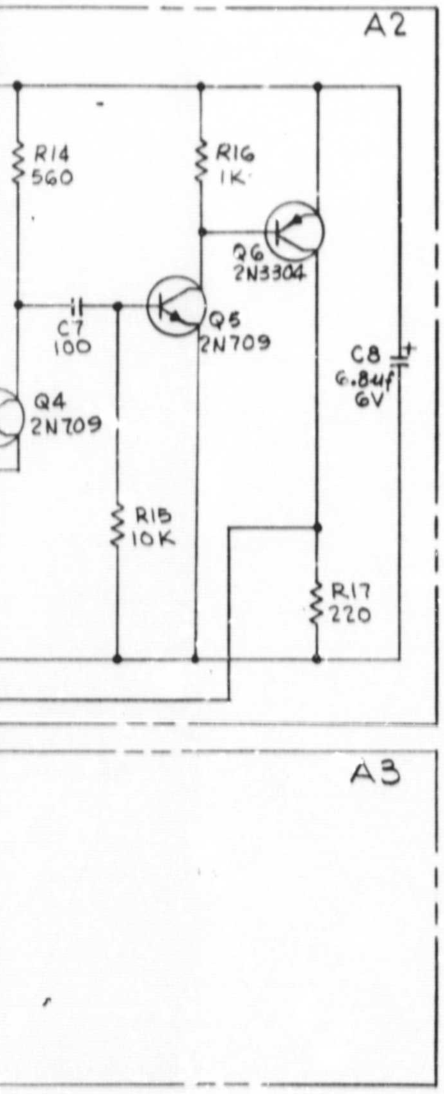

C

B

N100-12900 A

							ZONE	ITEM	CODE IDENT NO.	PART OR IDENTIFYING NO.	NOMENCLATURE OR DESCRIPTION	MATERIAL AND FINISH OR NOTE OR REF DES
								2				
								1				
QUANTITY REQUIRED												

LIST OF MATERIAL OR PARTS LIST

QTY PER MAJOR ASSY	NEXT ASSEMBLY	USED ON
	N100-12000	N100-00000

UNLESS OTHERWISE SPECIFIED
TOLERANCES IN:
2 PLACE DEC ±.03
3 PLACE DEC ±.010
ANGLES
MACHINED ±0° 15'
FORMED ±1°
SHEARED ±0° 30'
HOLE TOLERANCE PER AND 10387
SURFACE ROUGHNESS PER MIL-STD-10
MACHINED SURFACE FINISH ✓
DIMENSIONING AND TOLERANCING PER MIL-STD-8
ECCENTRICITY BETWEEN DIA(S) ON THE SAME CENTERLINE SHALL NOT EXCEED .015
TOTAL INDICATOR READING
ALL DIM. ARE IN INCHES INCLUDE APPLIED FINISH
WELD SYMBOLS PER MIL-STD-19
RIVET CODE PER NAS 523
THREADS PER MIL-S-7742
MARK PER MIL-STD-130
REMOVE ALL BURRS AND SHARP EDGES
SPECIFICATIONS:

PROJ ENGR
COMP ENGR
MAT'L & PROC ENGR
STRUCT | WTS
GROUP APP | 5-26-66
CHECKED BY | 3-25-66
DRAWN BY | Carter | 3-23-66
ENGR GROUP | 0-

LTV RESEARCH CENTER

SCHEMATIC
DETECTOR
A2 & A3

SIZE	CODE IDENT NO.	
D	11817	N100-12900

SCALE: NONE REV. A SHEET

A

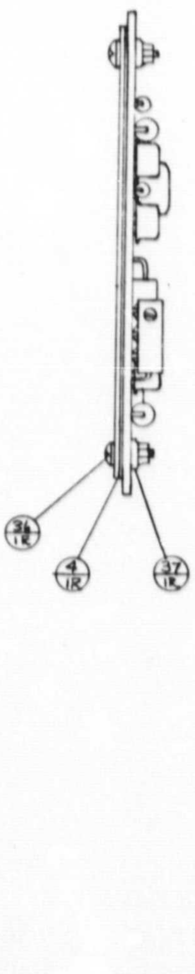

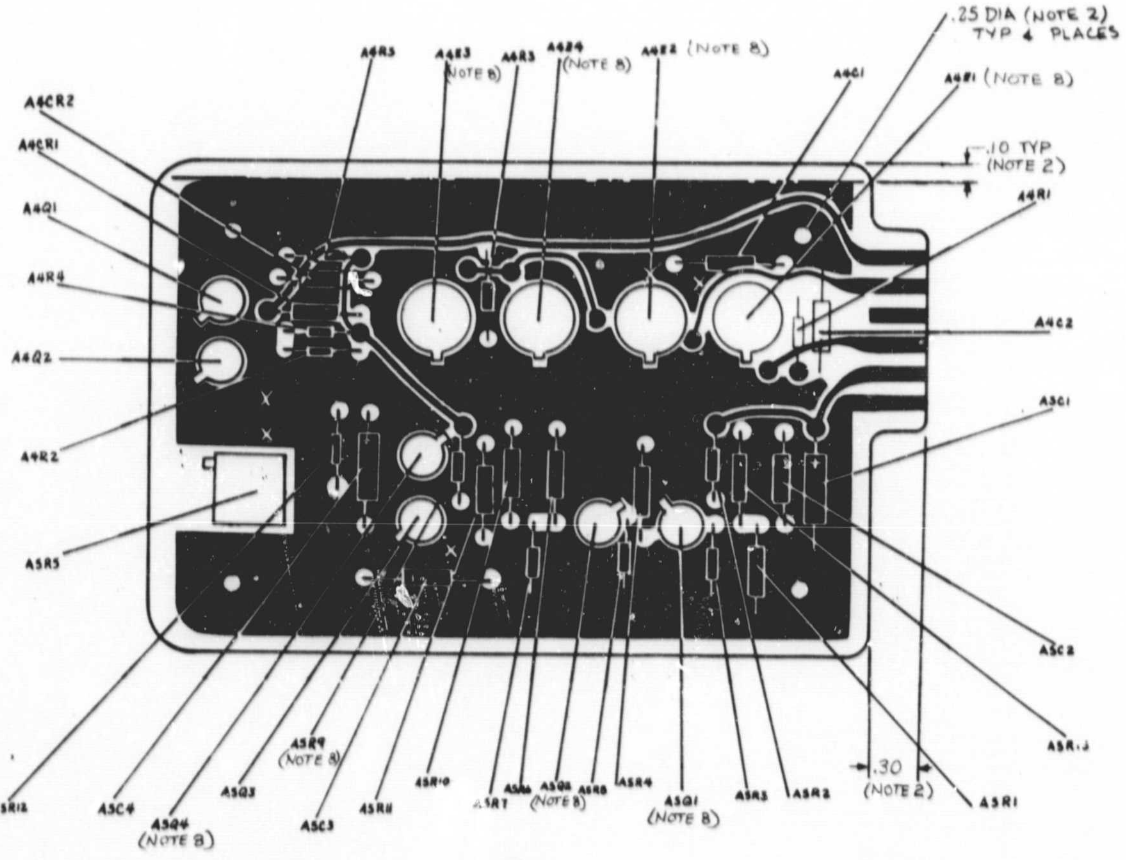

X- DENOTES INTERFACIAL CONNECTION

QTY PER MAJOR ASSY	NE
	N100

1

NOTES:
1. SOLDER & ASSEMBLE PER NPC 200-4
2. CONFORMAL COAT PER LTV-GARLAND SPEC 408-00060 MASK OFF AREA SHOWN
3. TEST BD. ASSY PER QCB-TB-003
4. FAIRCHILD SEMICONDUCTOR DIV., MOUNTAIN VIEW, CAL
5. ELECTRO MATERIALS CORP., SAN DIEGO, CAL.
6. ERIE TECHNOLOGICAL PROD. INC., EIRIE, PA
7. WESTON INST. INC., ARCHBALD, PA.
8. MOUNT BOTTOM OF TRANSISTORS & GATES .02$^{+.02}_{-.00}$ FROM BOARD.

REVISIONS

ZONE	LTR	DESCRIPTION	DATE	APPROVED
	A	INCORPORATE EO. NO. N100.4, & NO N100.15	1-2-67 1/24/67	DWG BY S. Lowe CHK BY R. Boyd

QUANTITY REQUIRED -01	ZONE	ITEM	CODE IDENT NO.	PART OR IDENTIFYING NO.	NOMENCLATURE OR DESCRIPTION	MATERIAL AND FINISH OR NOTE OR REF DES	
		40					
AR		39		24 AWG, SOFT, TINNED	WIRE, BARE	QQ-W-343, TYPE S	
		38					
4		37		MS21042-L04	NUT		
4		36		NAS600-5	SCREW		
		35					
4		34		5991421	GATE	NOTE 4	A4 Z1, Z2, Z3, Z4
		33					
2		32		1N916	DIODE	JEDEC	A4CR1, A4CR2
		31					
2		30		2N706	TRANSISTOR	JEDEC	A4Q1, A4Q2
1		29		2N708	TRANSISTOR	JEDEC	A5Q3
3		28		2N3251	TRANSISTOR	JEDEC	A5Q1, A5Q2, A5Q4
		27					
1		26		EL100AT332K	CAPACITOR	NOTE 5	A4C1
1		25		EL50AT104K	CAPACITOR	NOTE 5	A5C3
1		24		8005-000-W5R0-181K	CAPACITOR	NOTE 6	A5C2
1		23		CS13BB685K	CAPACITOR	MIL-C-26655	A4C2
2		22		CS13BD275K	CAPACITOR	MIL-C-26655	A5C1, A5C4
		21					
1		20		201-00-5K	POTENTIOMETER	NOTE 7	A5R5
		19					
1		18		RN55D 1001F	RESISTOR	MIL-R-10509	A5R13
1		17		↕ 5620F	↕	↕	A5R11
1		16		↕ 51R1F	↕	↕	A5R10
1		15		↕ 4752F	↕	↕	A5R6
1		14		↕ 1821F	↕	↕	A5R4
1		13		RN55D1000F	RESISTOR	MIL-R-10509	A5R1
1		12		RC05GF473J	RESISTOR	MIL-R-11	A5R2
2		11		RC05GF222J	RESISTOR	MIL-R-11	A4R4, A4R5
2		10		RC05GF - - - J	↕	↕ FACTORY SELECT	A4R2, A4R3
1		9		↕ 203J	↕	↕	A4R1
1		8		↕ 330J	↕	↕	A5R12
2		7		↕ 103J	↕	↕	A5R8, A5R9
1		6		↕ 624J	↕	↕	A5R7
1		5		RC05GF154J	RESISTOR	MIL-R-11	A5R3
1		4		N100-10100-01	SHIELD ASSY		
REF		3		N100-13900	SCHEMATIC		
1		2		N100-13001-01	BOARD		
		1		-01	BD ASSY		A4, A5

LIST OF MATERIAL OR PARTS LIST

QTY PER MAJOR ASSY	NEXT ASSEMBLY	USED ON
	N100-00000	N100-00000

UNLESS OTHERWISE SPECIFIED
TOLERANCES ON:
2 PLACE DEC ±.02
3 PLACE DEC ±.010
ANGLES
MACHINED ±0° 15'
FORMED ±1°
SHEARED ±0° 30'
HOLE TOLERANCE PER AND 10387
SURFACE ROUGHNESS PER MIL-STD-10
MACHINED SURFACE FINISH 125/
DIMENSIONING AND TOLERANCING PER MIL-STD-8
ECCENTRICITY BETWEEN ANY DIA(S) ON THE SAME CENTERLINE SHALL NOT EXCEED .010 TOTAL INDICATOR READING
ALL DIM. ARE IN INCHES & INCLUDE APPLIED FINISH
WELD SYMBOLS PER MIL-STD-19
RIVET CODE PER NAS 523
THREADS PER MIL-S-7742
MARK PER MIL-STD-130
REMOVE ALL BURRS AND SHARP EDGES
SPECIFICATIONS

PROJ ENGR		
COMP ENGR		
MAT'L/PROC ENGR		
STRUCT / WTS		
GROUP APP	R. Farmer	6-27-66
CHECKED BY	R. Boyd	6/24/66
DRAWN BY	Cartwright	6-17-66
ENGR GROUP	0-71100	

LTV RESEARCH CENTER

COMP BD ASSY
LOGIC & LINEAR AMPL
A4, A5

SIZE D | CODE IDENT NO. 11817 | N100-13000
SCALE: 2/1 | REV. A | SHEET

N100-13000 A

8 7 6 5

D

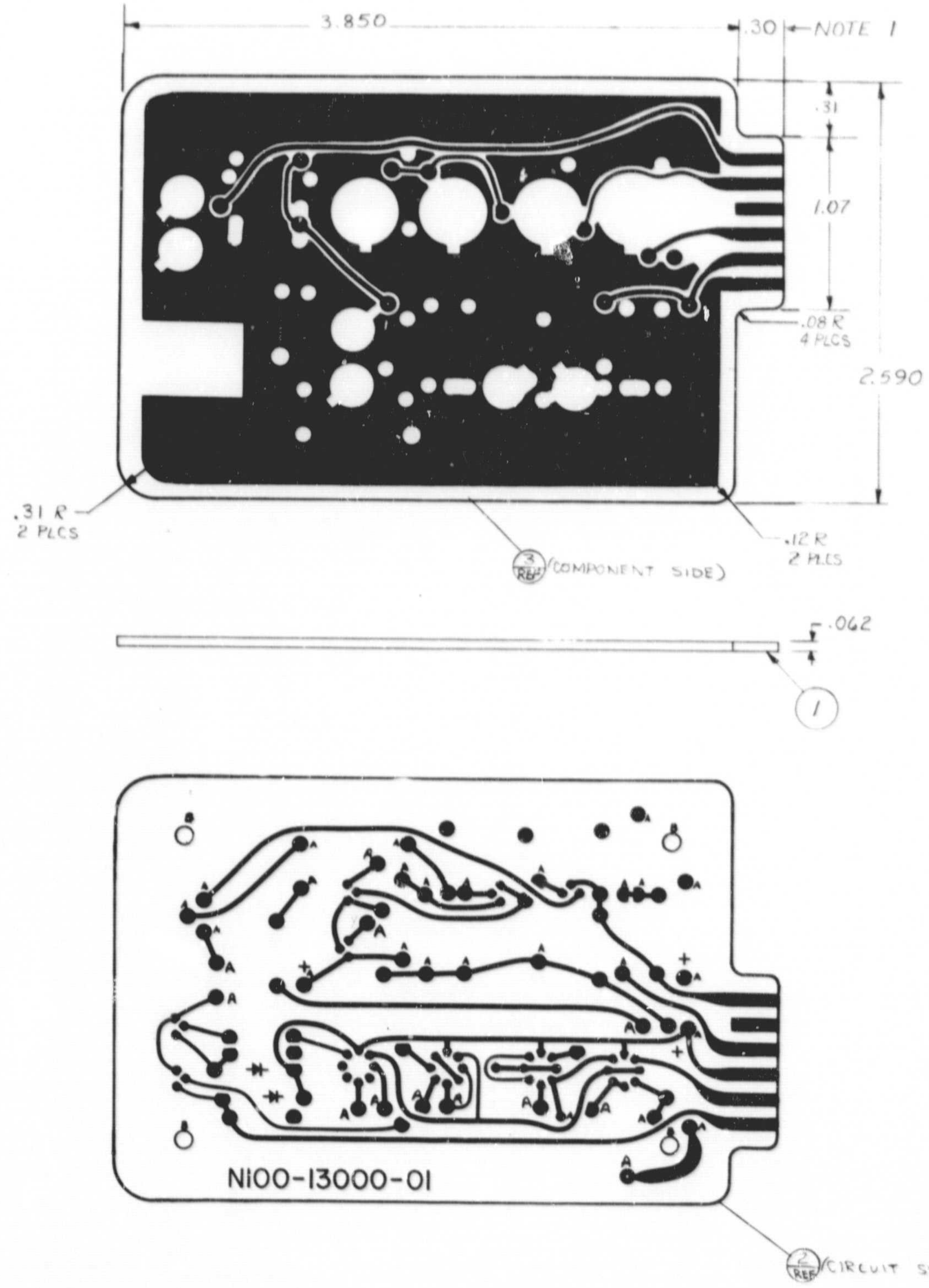

C

B

CODE	HOLE SIZE (INCHES)
NO CODE	.025 DIA.
A	.031 DIA.
B	.128 DIA.

A

QTY PER MAJOR ASSY	
	NI

NOTES:
1. RHODIUM PLATE CONNECTOR AREA PER MIL-STD-275.
2. FABRICATE AND SOLDER COAT PER MSFC-STD-154.

REVISIONS				
ZONE	LTR	DESCRIPTION	DATE	APPROVED
	A	1. INCREASED HOLE SIZE TO .031 12 PLCS. (VIAS .025) 2. CHANGED VIEW OF "B" SIZE HOLES	7/18/66 18 Jul 66 7/18/66	DWG. BY R G Bagwell CHK BY H. Forsythe APP. BY B J Simms

ODE	HOLE SIZE (INCHES)
CODE	.025 DIA.
A	.031 DIA.
B	.128 DIA.

N100-13001 A

				REF		3		N100-13006-01	ARTWORK	
				REF		2		N100-13005-01	ARTWORK	
						1		-01	BOARD	.062 THK-2/2OZ. MIL-P-13949 GEE
				-01	ZONE	ITEM	CODE IDENT NO.	PART OR IDENTIFYING NO.	NOMENCLATURE OR DESCRIPTION	MATERIAL AND FINISH OR NOTE OR REF DES
QUANTITY REQUIRED										

LIST OF MATERIAL OR PARTS LIST

QTY PER MAJOR ASSY	NEXT ASSEMBLY	USED ON
	N100-13000	N100-00000

UNLESS OTHERWISE SPECIFIED
TOLERANCES ON:
2 PLACE DEC ±.02 3 PLACE DEC ±.010
ANGLES
MACHINED ±0° 15' FORMED ±1° SHEARED ±0° 30'
HOLE TOLERANCE PER AND 10387
SURFACE ROUGHNESS PER MIL-STD-10
125 ✓ MACHINED SURFACE FINISH
DIMENSIONING AND TOLERANCING PER MIL-STD-8
ECCENTRICITY BETWEEN ANY DIA(S) ON THE SAME CENTERLINE SHALL NOT EXCEED .010 TOTAL INDICATOR READING
ALL DIM. ARE IN INCHES & INCLUDE APPLIED FINISH
WELD SYMBOLS PER MIL-STD-19
RIVET CODE PER NAS 523
THREADS PER MIL-S-7742
MARK PER MIL-STD-130
REMOVE ALL BURRS AND SHARP EDGES
SPECIFICATIONS:

PROJ ENGR		
COMP ENGR		
MAT'L/PROC-ENGR		
STRUCT / WTS		
GROUP APP	B J Simms	
CHECKED BY	C. Hartwright	6/23/66
DRAWN BY	R G BAGWELL	6/22/66
ENGR GROUP	0-71100	

LTV RESEARCH CENTER

BOARD
LOGIC & LINEAR AMPL
A4 & A5

SIZE	CODE IDENT NO.	
D	11817	N100-13001
SCALE: 2/1	REV. A	SHEET

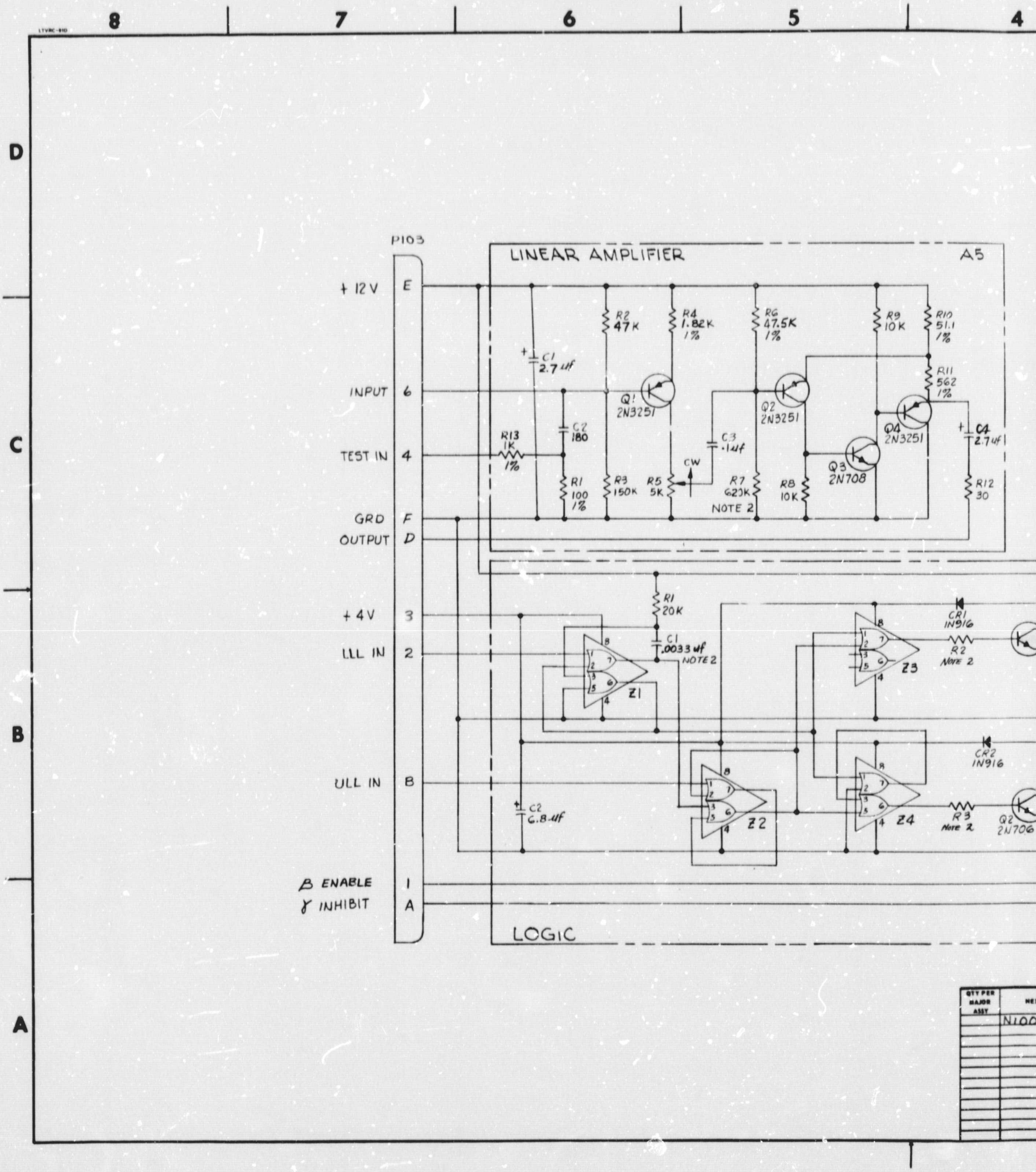
LTVRC-910
8
7
6
5
4
D
C
B
A
P103
LINEAR AMPLIFIER
A5
+12V E
INPUT 6
TEST IN 4
GRD F
OUTPUT D
+4V 3
LLL IN 2
ULL IN B
B ENABLE 1
γ INHIBIT A
C1 2.7 uf
R2 47K
R4 1.82K 1%
R6 47.5K 1%
R9 10K
R10 51.1 1%
R11 562 1%
Q1 2N3251
Q2 2N3251
Q4 2N3251
Q3 2N708
C4 2.7uf
C2 180
R13 1K 1%
C3 .1uf
CW
R1 100 1%
R3 150K
R5 5K
R7 620K
NOTE 2
R8 10K
R12 30
R1 20K
C1 .0033 uf
NOTE 2
Z1
Z2
Z3
Z4
C2 6.8 uf
CR1 1N916
R2 Note 2
CR2 1N916
R3 Note 2
Q2 2N706
LOGIC
QTY PER MAJOR ASSY
N100

1

NOTES:
1. UNLESS OTHERWISE SPECIFIED:
ALL RESISTANCES ARE IN OHMS, 1/8W, 5%
ALL CAPACITANCES ARE IN PF
2. TO BE OF FACTORY SELECT VALUE

REVISIONS

ZONE	LTR	DESCRIPTION	DATE	APPROVED
7	A	1. REVISED PIN CONNECTIONS – P103	5-1-66	[illegible]
C6		2. R1 - 1K CHANGED TO R13 - 1K, R4 WAS 5.6K		
C6		3. C2 WAS 120		
C5		4. R7 WAS 680K, R2 WAS 150K		
B6		5. C1 WAS .0005 μF		
B5	B	INCORPORATE EO. NO. N100.4 & N100.15.	1-7-66 1/24/67	DWG BY J. Lowe CHK BY R.L. Barnell

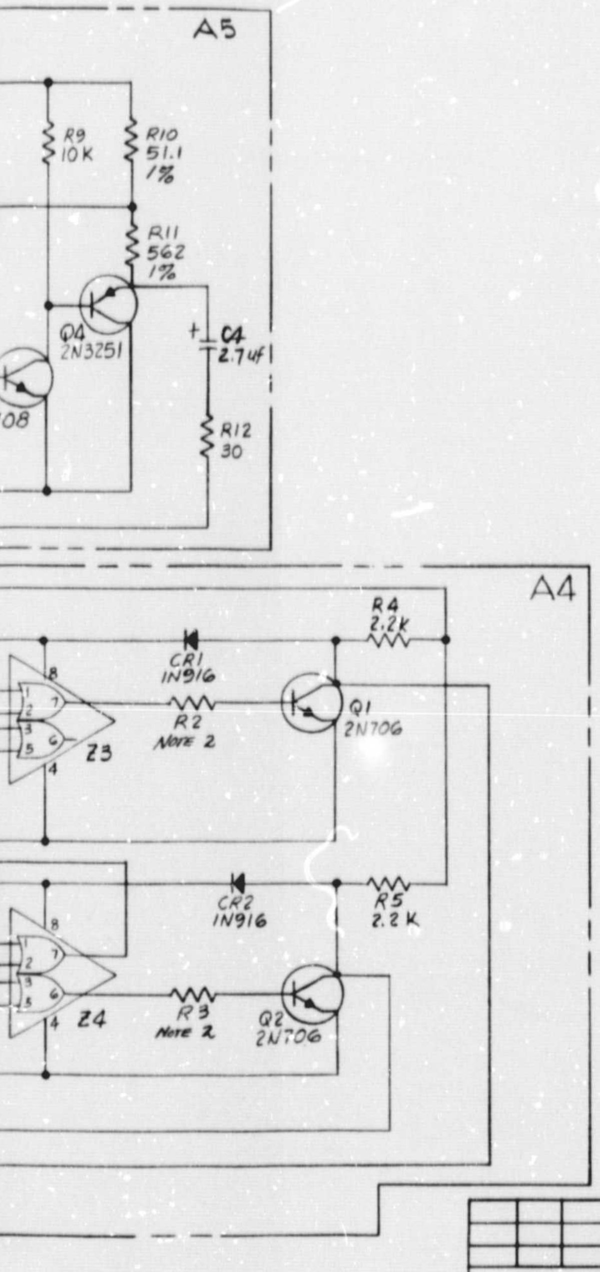

					ZONE	ITEM	CODE IDENT NO.	PART OR IDENTIFYING NO.	NOMENCLATURE OR DESCRIPTION	MATERIAL AND FINISH OR NOTE OR REF DES
						2				
						1				
QUANTITY REQUIRED										

LIST OF MATERIAL OR PARTS LIST

QTY PER MAJOR ASSY	NEXT ASSEMBLY	USED ON
	N100-13000	N100-00000

UNLESS OTHERWISE SPECIFIED
TOLERANCES ON:
2 PLACE DEC ± .02
3 PLACE DEC ± .010
ANGLES
MACHINED ± 0° 15'
FORMED ± 1°
SHEARED ± 0° 30'
HOLE TOLERANCE PER AND 10387
SURFACE ROUGHNESS PER MIL-STD-10
MACHINED SURFACE FINISH ✓
DIMENSIONING AND TOLERANCING PER MIL-STD-8
ECCENTRICITY BETWEEN ANY DIA(S) ON THE SAME CENTERLINE SHALL NOT EXCEED .010
TOTAL INDICATOR READING
ALL DIMS ARE IN INCHES & INCLUDE APPLIED FINISH
WELD SYMBOLS PER MIL-STD-19
RIVET CODE PER NAS 523
THREADS PER MIL-S-7742
MARK PER MIL-STD-130
REMOVE ALL BURRS AND SHARP EDGES
SPECIFICATIONS:

PROJ ENGR
COMP ENGR
MAT'L/PROC ENGR
STRUCT WTS
GROUP APP C. J. [illegible] 3-28-66
CHECKED BY [illegible] 3-29-66
DRAWN BY [illegible] 3-25-66
ENGR GROUP 0-71100

LTV RESEARCH CENTER

SCHEMATIC
LOGIC & LINEAR AMPL
A4, A5

SIZE D
CODE IDENT NO. 11817
N100-13900
SCALE: NONE
REV. B
SHEET

N100-13900 B

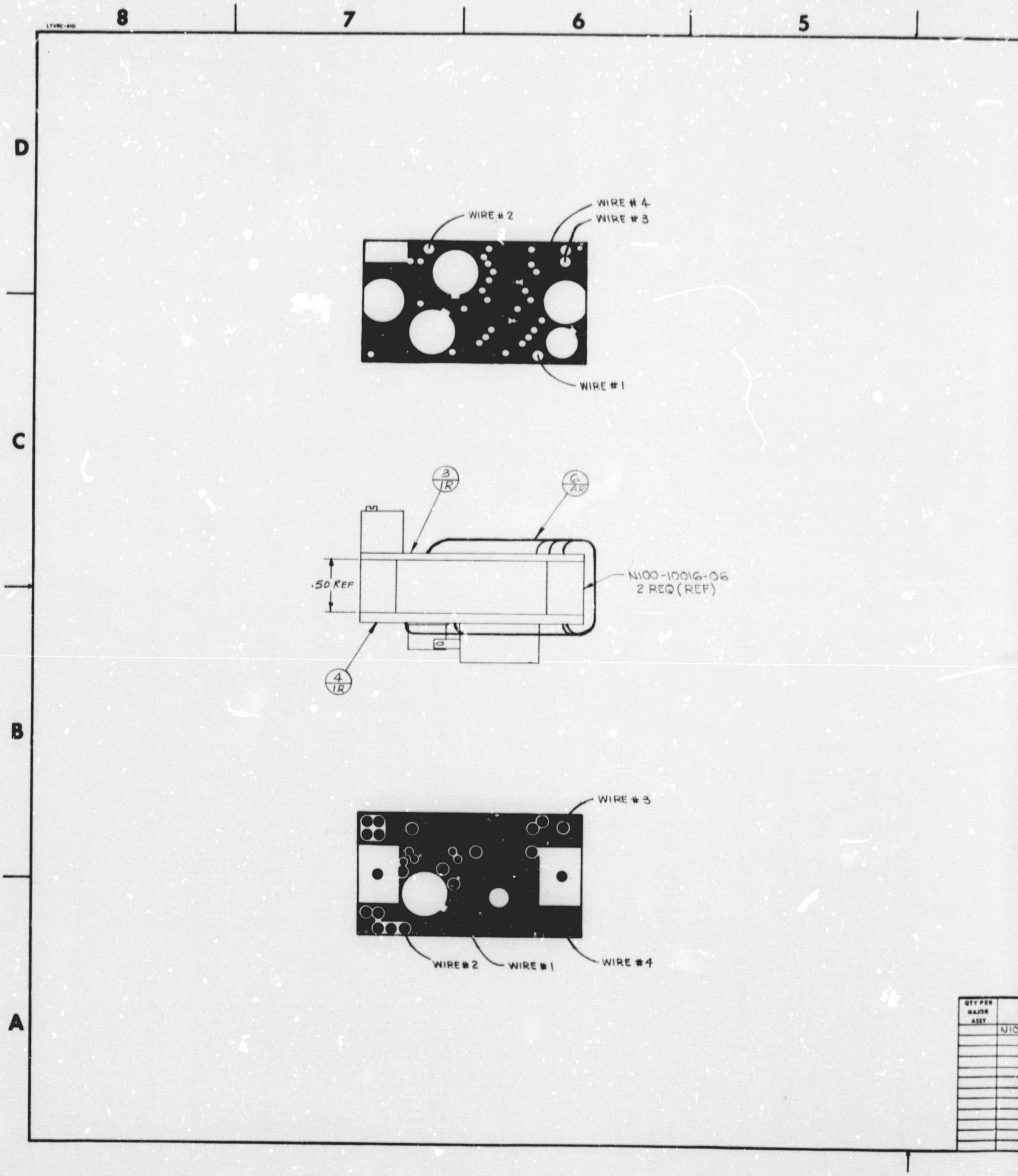
LTVRC-810
8
7
6
5
D
C
B
A
WIRE # 2
WIRE # 4
WIRE # 3
WIRE # 1
3/1R
6/AR
.50 REF
N100-10016-06
2 REQ (REF)
4/1R
WIRE # 3
WIRE # 2
WIRE # 1
WIRE # 4
QTY PER MAJOR ASSY
N10

4 3 2 1

REVISIONS				
ZONE	LTR	DESCRIPTION	DATE	APPROVED

NOTES:

1. ASSEMBLE & SOLDER PER NASA SPEC NPC 200-4

D

C

B

N100-14000

QUANTITY REQUIRED				-01	ZONE	ITEM	CODE IDENT NO.	PART OR IDENTIFYING NO.	NOMENCLATURE OR DESCRIPTION	MATERIAL AND FINISH OR NOTE OR REF DES
				AR		6		E24, WHT	WIRE	MIL-W-16878
						5				
				1		4		N100-14002-01	COMP BD ASSY	
				1		3		N100-14001-01	COMP BD ASSY	
						2				
						1		-01		A6

LIST OF MATERIAL OR PARTS LIST

QTY PER MAJOR ASSY	NEXT ASSEMBLY	USED ON
	N100-10200	N100-00000

UNLESS OTHERWISE SPECIFIED
TOLERANCES ON:
2 PLACE DEC ±.02 3 PLACE DEC ±.010
ANGLES
MACHINED ±0° 15' FORMED ±1° SHEARED ±0° 30'
HOLE TOLERANCE PER AND 10387
SURFACE ROUGHNESS PER MIL-STD-10
MACHINED SURFACE FINISH 125✓
DIMENSIONING AND TOLERANCING PER MIL-STD-8
ECCENTRICITY BETWEEN ANY DIA(S) ON THE SAME CENTERLINE SHALL NOT EXCEED .010 TOTAL INDICATOR READING
ALL DIM. ARE IN INCHES & INCLUDE APPLIED FINISH
WELD SYMBOLS PER MIL-STD-19
RIVET CODE PER NAS 523
THREADS PER MIL-S-7742
MARK PER MIL-STD-130
REMOVE ALL BURRS AND SHARP EDGES
SPECIFICATIONS:

PROJ ENGR		
COMP ENGR		
MAT'L/PROC-ENGR		
STRUCT / WTS		
GROUP APP		7/21/66
CHECKED BY		7/18/66
DRAWN BY	CARTWRIGHT	7-14-66
ENGR GROUP	0-71100	

LTV RESEARCH CENTER

POWER SUPPLY
LOW VOLTAGE
A6

SIZE	CODE IDENT NO.	
D	11817	N100-14000
SCALE: 2/1	REV.	SHEET

A

LTVRC 810

8 7 6 5

D

C

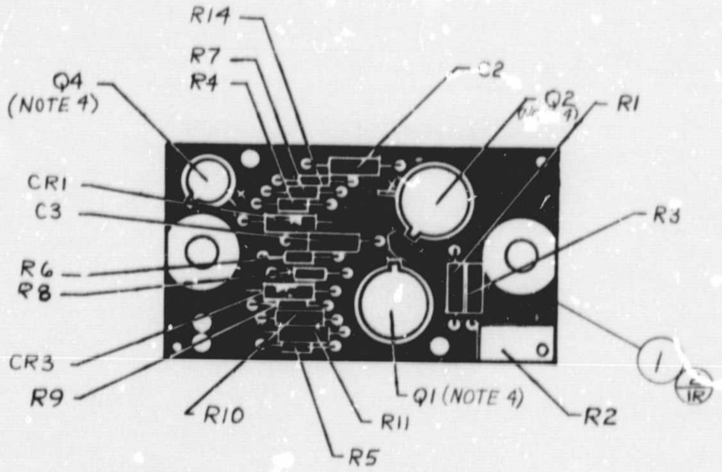

B

X - DENOTES INTERFACIAL CONNECTION

A

QTY PER MAJOR ASSY

1

NOTES:
1. SOLDER & ASSEMLE PER NPC 200-4
2. MOTOROLA INC., PHOENIX, ARIZONA
3. BOURNS INC., RIVERSIDE, CALIF.
4. MOUNT BOTTOM OF TRANSISTORS .02 $^{+.03}_{-.00}$ FROM BOARD.
5. SELECTED COMPONENT

REVISIONS

DESCRIPTION	DATE	APPROVED
ATE EO NO. N100.5	1-1-67	
	1/20/67	

					ZONE	ITEM	CODE IDENT NO.	PART OR IDENTIFYING NO.	NOMENCLATURE OR DESCRIPTION	MATERIAL AND FINISH OR NOTE OR REF DES
QUANTITY REQUIRED				-01						
				AR		27		24 AWG, SOFT, TINNED	WIRE, BARE	QQ-W-343, TYPE S
				1		26		1N751 A	DIODE	JEDEC CR3
				1		25		1N754A	DIODE	JEDEC CR1
						24				
				1		23		2N3947	TRANSISTOR	JEDEC Q4
				1		22		2N2913	TRANSISTOR	JEDEC Q2
				1		21		2N3811	TRANSISTOR	NOTE 2 Q1
						20				
				1		19		8005-000-COGO-270K	CAPACITOR	C3
				1		18		8005-000-W5RO-221K	CAPACITOR	C2
						17				
				1		16		3280W-1-502	POTENTIOMETER	NOTE 3 R2
						15				
				1		14		RN55D----F	RESISTOR	MIL-R-10509, NOTE 5 R1
						13				
				1		12		RN55D 5112 F	RESISTOR	MIL-R-10509 R10
				2		11		RN55D 1213 F	RESISTOR	MIL-R-10509 R3, R11
						10				
				1		9		RC05GF 221 J	RESISTOR	MIL-R-11 R9
				1		8		622 J	↕	↕ R14
				2		7		103 J	↕	↕ R6, R7
				1		6		204 J	↕	↕ R5
				2		5		RC05GF 105J	RESISTOR	MIL-R-11 R4, R8
						4				
				REF		3		N100-14900	SCHEMATIC	
				1		2		N100-14003-01	BOARD	
						1		-01	BOARD ASSY	

LIST OF MATERIAL OR PARTS LIST

A N100-14001

QTY PER MAJOR ASSY	NEXT ASSEMBLY	USED ON
	N100-14000	N100-D0J00

UNLESS OTHERWISE SPECIFIED
TOLERANCES ON:
2 PLACE DEC ±.02 3 PLACE DEC ±.010
ANGLES MACHINED ±0° 15' FORMED ±1° SHEARED ±0° 30'
HOLE TOLERANCE PER AND 10387
SURFACE ROUGHNESS PER MIL-STD-10 MACHINED SURFACE FINISH ✓
DIMENSIONING AND TOLERANCING PER MIL-STD-8
ECCENTRICITY BETWEEN ANY DIA(S) ON THE SAME CENTERLINE SHALL NOT EXCEED .010 TOTAL INDICATOR READING
ALL DIM. ARE IN INCHES & INCLUDE APPLIED FINISH
WELD SYMBOLS PER MIL-STD-19
RIVET CODE PER NAS 523
THREADS PER MIL-S-7742
MARK PER MIL-STD-130
REMOVE ALL BURRS AND SHARP EDGES
SPECIFICATIONS:

PROJ ENGR		
COMP ENGR		
MAT'L/PROC ENGR		
STRUCT / WTS		
GROUP APP		6-27-66
CHECKED BY		6-27-66
DRAWN BY		6-17-66
ENGR GROUP	0-7100	

LTV RESEARCH CENTER

COMP BD ASSY
LOW VOLTAGE PWR SUPPLY
TOP BOARD

SIZE	CODE IDENT NO.	
D	11817	N100-14001
SCALE: 2/1	REV. A	SHEET

8 7 6 5 4

D

C

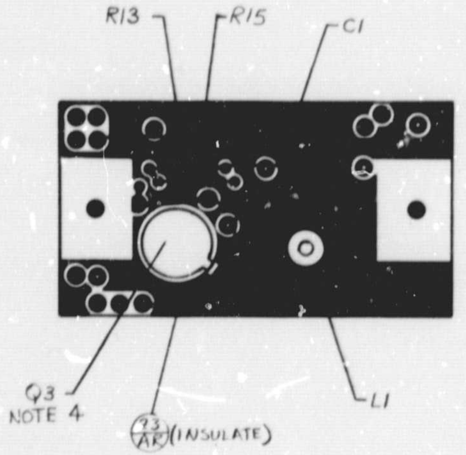

B

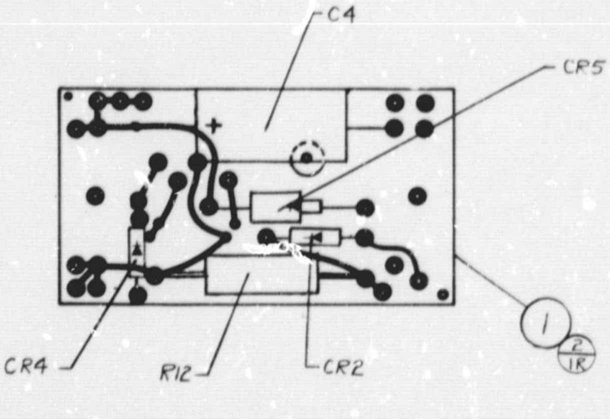

A

QTY PER MAJOR ASSY	NEX
	N100

1

4 3 2 1

NOTES:
1. SOLDER & ASSEMBLE PER NPC200-4
2. MOTOROLA INC., PHOENIX, ARIZONA
3. TOROTEL INC., KANSAS CITY, MO.
4. MOUNT BOTTOM OF TRANSISTORS .02$^{+.02}_{-.00}$ FROM BOARD.
5. FAIRCHILD SEMICONDUCTOR INC. SAN RAFAEL CALIFORNIA.

REVISIONS

ZONE	LTR	DESCRIPTION	DATE	APPROVED
	A	INCOPORATED E.O. NO. N100.6, N100.10	1-3-67 1/24/67	CHK BY

D

C

QUANTITY REQUIRED -01	ZONE	ITEM	CODE IDENT NO.	PART OR IDENTIFYING NO.	NOMENCLATURE OR DESCRIPTION	MATERIAL AND FINISH OR NOTE OR REF DES
AR		23		24 AWG, SOFT, TINNED	WIRE, BARE	QQ-W-343, TYPE S
		22				
1		21		3-48NC-2A-3/8LG	SCREW (COM'L)	100° FLAT HEAD SLOTTED, CRES
		20				
1		19		P50-3	INDUCTOR	NOTE 3 L1
		18				
1		17		1N3829	DIODE	JEDEC CR5
1		16		FDH600	DIODE	NOTE 5 CR4
1		15		1N751A	DIODE	JEDEC CR2
		14				
1		13		2N3720	TRANSISTOR	NOTE 2 Q3
		12				
		11				
2		9		CL65CH151MP3	CAPACITOR	MIL-C-3965 C1, C4
		8				
1		7		RC32GF361J	RESISTOR	MIL-R-11 R12
1		6		RC05GF152J	RESISTOR	MIL-R-11 R15
1		5		RC05GF102J	RESISTOR	MIL-R-11 R13
		4				
REF		3		N100-14900	SCHEMATIC	
1		2		N100-14004-01	BOARD	
		1		-01	BOARD ASSY	

LIST OF MATERIAL OR PARTS LIST

B

N100-14002 A

QTY PER MAJOR ASSY	NEXT ASSEMBLY	USED ON
	N100-14000	N100-00000

UNLESS OTHERWISE SPECIFIED
TOLERANCES ON:
2 PLACE DEC ±.02 3 PLACE DEC ±.010
ANGLES
MACHINED ±0° 15' FORMED ±1° SHEARED ±0° 30'
HOLE TOLERANCE PER AND 10387
SURFACE ROUGHNESS PER MIL-STD-10
MACHINED SURFACE FINISH 125 ✓
DIMENSIONING AND TOLERANCING PER MIL-STD-8
ECCENTRICITY BETWEEN ANY DIA(S) ON THE SAME CENTERLINE SHALL NOT EXCEED .010 TOTAL INDICATOR READING
ALL DIM. ARE IN INCHES & INCLUDE APPLIED FINISH
WELD SYMBOLS PER MIL-STD-19
RIVET CODE PER NAS 523
THREADS PER MIL-S-7742
MARK PER MIL-STD-130
REMOVE ALL BURRS AND SHARP EDGES
SPECIFICATIONS:

PROJ ENGR
COMP ENGR
MAT'L/PROC-ENGR
STRUCT WTS
GROUP APP 6/27/66
CHECKED BY 6/27/66
DRAWN BY Cartwright 6-17-66
ENGR GROUP 0-71100

LTV RESEARCH CENTER

COMP BD ASSY
LOW VOLTAGE PWR SUPPLY
LWR BOARD

SIZE D
CODE IDENT NO. 11817
N100-14002
SCALE: 2/1
REV. A
SHEET

A

2

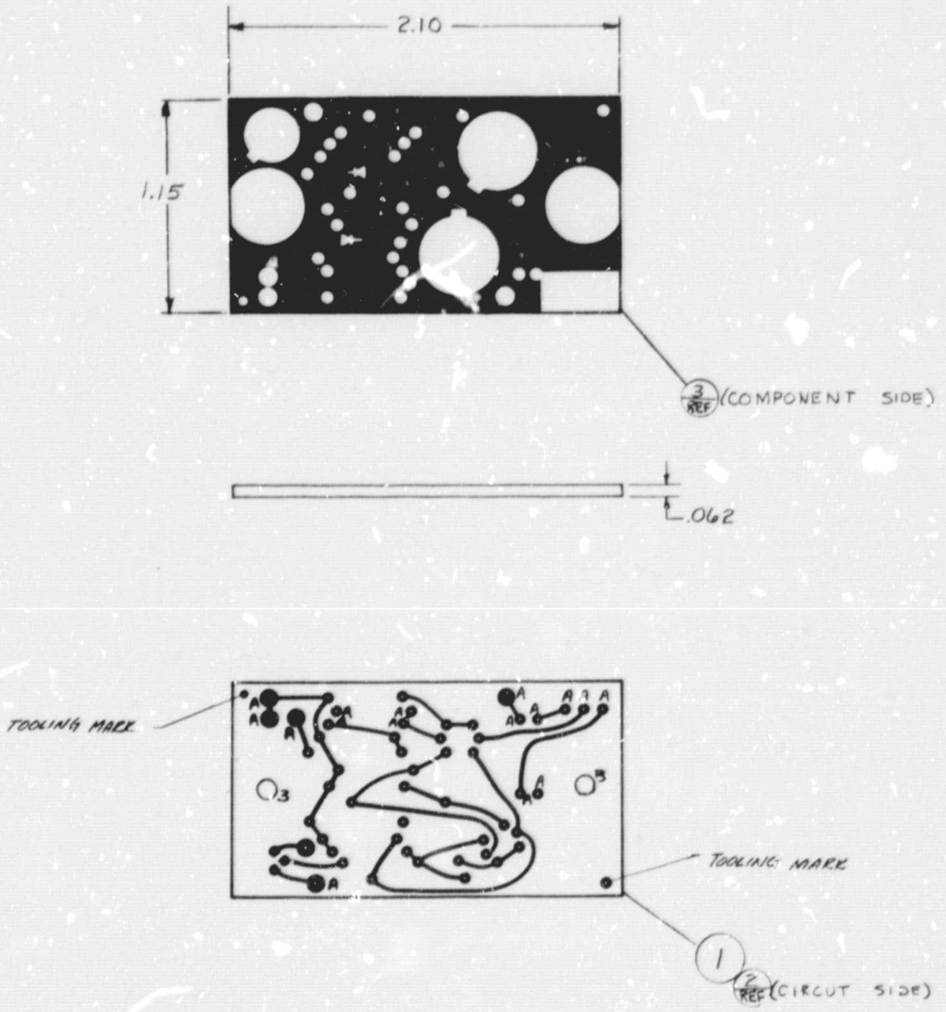

CODE	HOLE SIZE
NO CODE	.025 DIA
A	.031 DIA
B	.156

QTY PER MAJOR ASSY

4 3 2 1

NOTES:

1. FABRICATE AND SOLDER COAT PER MSFC-STD-275.

REVISIONS				
ZONE	LTR	DESCRIPTION	DATE	APPROVED
	A	INCOPORATED EO. NO. N100.7	1-5-67 1/24/67	DWG BY S. LOWE CHK BY R. Bagwell

D

C

SIDE)

B

IDE)

N100-14003 A

				REF		3		N100 14006-01	ARTWORK	
				REF		2		N100-14005-01	ARTWORK	
						1		-01	BOARD	.062THK 2/2oz. MIL-P-13949 GEE
QUANTITY REQUIRED				-01	ZONE	ITEM	CODE IDENT NO.	PART OR IDENTIFYING NO.	NOMENCLATURE OR DESCRIPTION	MATERIAL AND FINISH OR NOTE OR REF DES

LIST OF MATERIAL OR PARTS LIST

QTY PER MAJOR ASSY	NEXT ASSEMBLY	USED ON
	N100-14001	N100-00000

UNLESS OTHERWISE SPECIFIED
TOLERANCES ON:
2 PLACE DEC ±.02 3 PLACE DEC ±.010
ANGLES
MACHINED ±0° 15' FORMED ±1° SHEARED ±0° 20'
HOLE TOLERANCE PER AND 10387
SURFACE ROUGHNESS PER MIL-STD-10
MACHINED SURFACE FINISH 125 ✓
DIMENSIONING AND TOLERANCING PER MIL-STD-8
ECCENTRICITY BETWEEN ANY DIA(S) ON THE SAME CENTERLINE SHALL NOT EXCEED .010 TOTAL INDICATOR READING
ALL DIM. ARE IN INCHES & INCLUDE APPLIED FINISH
WELD SYMBOLS PER MIL-STD-19
RIVET CODE PER NAS 523
THREADS PER MIL-S-7742
MARK PER MIL-STD-130
REMOVE ALL BURRS AND SHARP EDGES
SPECIFICATIONS:

PROJ ENGR		
COMP ENGR		
MAT'L/PROC ENGR		
STRUCT / WTS		
GROUP APP	B.G. Sommer	6-27-66
CHECKED BY	R. Bagwell	6/29/66
DRAWN BY	CARTWRIGHT	6-22-66
ENGR GROUP	0-71100	

LTV RESEARCH CENTER

BOARD
LOW VOLTAGE PWR SUPPLY
TOP BOARD

A

SIZE	CODE IDENT NO.	
D	11817	N100-14003
SCALE 2/1	REV. A	SHEET

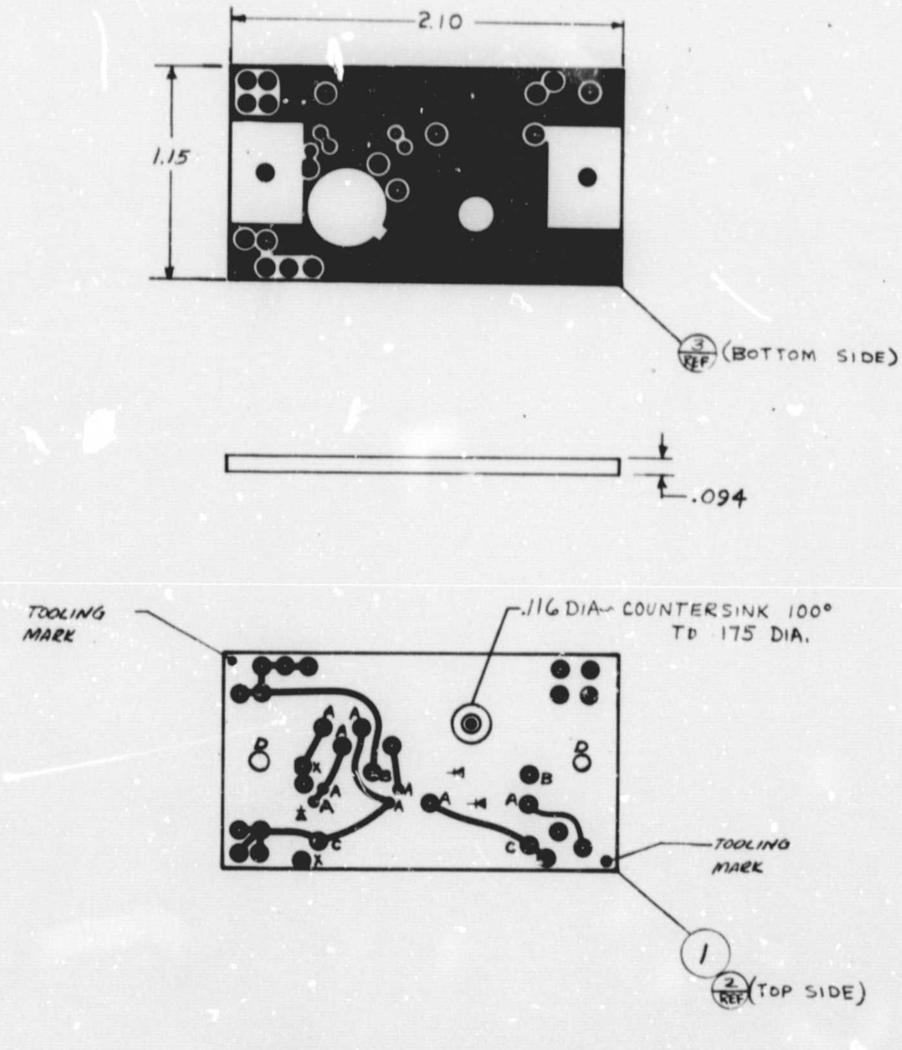

CODE	HOLE SIZE
NO CODE	.031 DIA
A	.025 DIA
B	.040 DIA
C	.047 DIA
D	.156 DIA

NOTES:

1. FABRICATE AND SOLDER COAT PER MSFC-STD-275.

REVISIONS

ZONE	LTR	DESCRIPTION	DATE	APPROVED
	A	INCORPORATED EO NO. N100-6	1-12-67 1/24/67	DWG BY A H Lewis CHK BY R.W. Bagwell

NICO-14004 A

				REF		3		N100-14006-02	ARTWORK	
				REF		2		N100-14005-03	ARTWORK	
						1		-01	BOARD	.094 THK 2/2oz. MIL-P-13949 GEE
				-01	ZONE	ITEM	CODE IDENT NO.	PART OR IDENTIFYING NO.	NOMENCLATURE OR DESCRIPTION	MATERIAL AND FINISH OR NOTE OR REF DES
QUANTITY REQUIRED										

LIST OF MATERIAL OR PARTS LIST

QTY PER MAJOR ASSY	NEXT ASSEMBLY	USED ON
	N100-14002	N100-00000

UNLESS OTHERWISE SPECIFIED
TOLERANCES ON:
2 PLACE DEC ±.02 3 PLACE DEC ±.010
ANGLES
MACHINED ±0° 15' FORMED ±1° SHEARED ±0° 30'
HOLE TOLERANCE PER AND 10387
SURFACE ROUGHNESS PER MIL-STD-10
MACHINED SURFACE FINISH 125 ✓
DIMENSIONING AND TOLERANCING PER MIL-STD-8
ECCENTRICITY BETWEEN ANY DIA(S) ON THE SAME CENTERLINE SHALL NOT EXCEED .010 TOTAL INDICATOR READING
ALL DIM ARE IN INCHES & INCLUDE APPLIED FINISH
WELD SYMBOLS PER MIL-STD-19
RIVET CODE PER NAS 523
THREADS PER MIL-S-7742
MARK PER MIL-STD-130
REMOVE ALL BURRS AND SHARP EDGES
SPECIFICATIONS:

PROJ ENGR		
COMP ENGR		
MAT'L/PROC ENGR		
STRUCT / WTS		
GROUP APP	B.J. Farrow	6-27-66
CHECKED BY	R.W. Bagwell	6/24/66
DRAWN BY	CARTWRIGHT	6-22-66
ENGR GROUP	0-71100	

LTV RESEARCH CENTER

BOARD
LOW VOLTAGE PWR SUPPLY
LWR BOARD

SIZE	CODE IDENT NO.	
D	11817	N100-14004

SCALE: 2/1 REV. A SHEET

2

NOTES:
1. UNLESS OTHERWISE SPECIFIED:
ALL RESISTANCES ARE IN OHMS, 1/8W, 5%
ALL CAPACITANCES ARE IN PF
ALL INDUCTANCES ARE IN MILLIHENERIES
2. * FACTORY SELECT COMPONENT-
TYPICAL VALUE SHOWN.

REVISIONS				
ZONE	LTR	DESCRIPTION	DATE	APPROVED
C3 D3	A	1. R1 WAS 16.2K, 1% 2. ADDED NOTE 2	5-11-66	
	B	INCORPORATED EO NO. N100.5 & N100.6., N100.10	1-3-67 1/24/67	Jo Lowe CHK BY

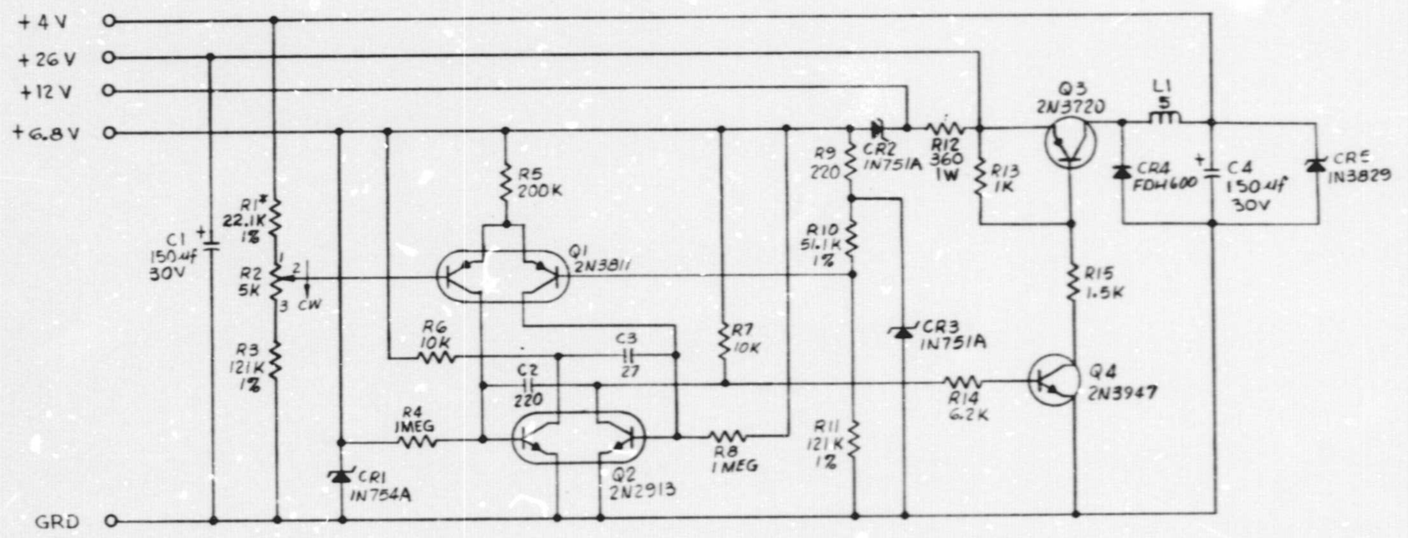

				2				
				1				
QUANTITY REQUIRED			ZONE	ITEM	CODE IDENT NO.	PART OR IDENTIFYING NO.	NOMENCLATURE OR DESCRIPTION	MATERIAL AND FINISH OR NOTE OR REF DES

LIST OF MATERIAL OR PARTS LIST

QTY PER MAJOR ASSY	NEXT ASSEMBLY	USED ON
	N100-14000	N100-00000

UNLESS OTHERWISE SPECIFIED
TOLERANCES ON:
2 PLACE DEC ±.02
3 PLACE DEC ±.010
ANGLES
MACHINED ±0° 15'
FORMED ±1°
SHEARED ±0° 30'
HOLE TOLERANCE PER AND 10387
SURFACE ROUGHNESS PER MIL-STD-10
MACHINED SURFACE FINISH 125√
DIMENSIONING AND TOLERANCING PER MIL-STD-8
ECCENTRICITY BETWEEN ANY DIA(S) ON THE SAME CENTERLINE SHALL NOT EXCEED .010 TOTAL INDICATOR READING
ALL DIM ARE IN INCHES & INCLUDE APPLIED FINISH
WELD SYMBOLS PER MIL-STD-19
RIVET CODE PER NAS 523
THREADS PER MIL-S-7742
MARK PER MIL-STD-130
REMOVE ALL BURRS AND SHARP EDGES
SPECIFICATIONS:

PROJ ENGR		
COMP ENGR		
MAT'L PROC ENGR		
STRUCT / WTS		
GROUP APP		3/25/66
CHECKED BY		3/25/66
DRAWN BY		3-25-66
ENGR GROUP	0-71100	

LTV RESEARCH CENTER

SCHEMATIC
LOW VOLTAGE PWR SUPPLY
AG

SIZE C
CODE IDENT NO. 11817
N100-14900
SCALE: NONE
REV. B
SHEET

N100-14900 B

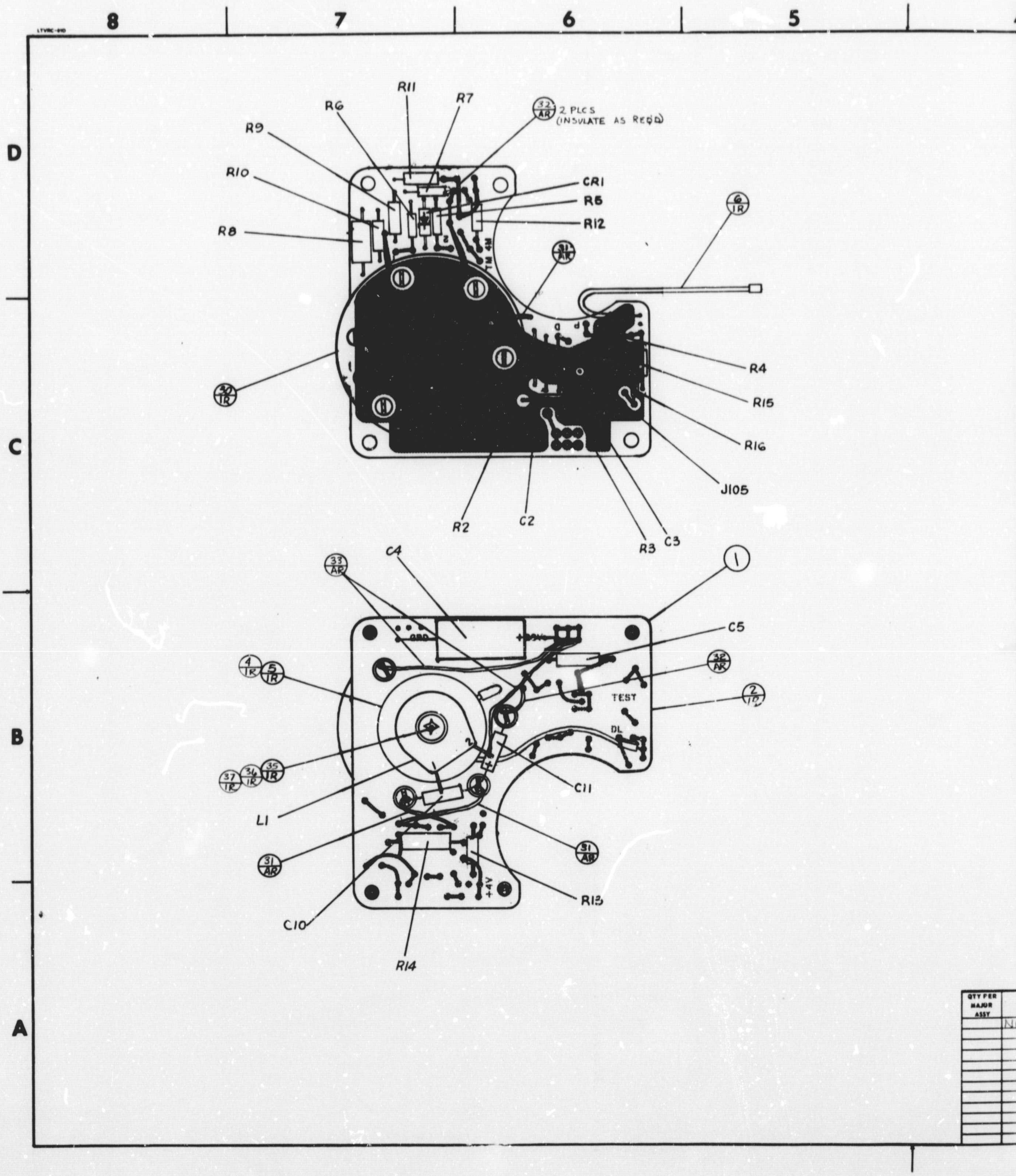
8
7
6
5
D
C
B
A
R11
R7
R6
R9
32 AR 2 PLCS (INSULATE AS REQD)
R10
CR1
R5
R12
R8
6 IR
31 AR
R4
R15
R16
J105
30 IR
R2
C2
R3
C3
C4
33 AR
1
C5
4 IR
5 IR
32 AR
2 IR
TEST
DL
C11
35 IR
36 IR
37 IR
L1
31 AR
31 AR
R13
+4V
C10
R14
QTY PER MAJOR ASSY

REVISIONS				
ZONE	LTR	DESCRIPTION	DATE	APPROVED

NOTES:
1. SOLDER & ASSEMBLE PER NPC 200-4.
2. FACTORY SELECT COMPONENTS; SELECTED ON FINAL ASSY.
3. ELECTRO MATERIALS CORP., SAN DIEGO, CAL.
4. TOROTEL, INC., KANSAS CITY, MO.
5. TEXAS INSTRUMENTS INC., DALLAS, TEX.
6. PULSE ENGR. CO., SANTA CLARA, CAL.
7. SEALECTRO CORP., MAMARONECK, N.Y.

QUANTITY REQUIRED -01	ZONE	ITEM	CODE IDENT NO.	PART OR IDENTIFYING NO.	NOMENCLATURE OR DESCRIPTION	MATERIAL AND FINISH OR NOTE OR REF DES
1		37		NO. 4	LOCKWASHER -	SPLIT (COM'L)
1		36		NO. 4	WASHER - FLAT	(COM'L)
1		35		3-48 NC-2A	SCREW (COML)	SLOTTED-RH
		34				
AR		33		E22, WHT	WIRE	MIL-W-16878
AR		32		24 AWG, SOFT, TINNED	WIRE	QQ-W-343, TYPE S
AR		31		E24, WHT	WIRE	MIL-W-16878
1		30		PE 5400	PWR SUPPLY	NOTE 6
1		29		P45-6	INDUCTOR	NOTE 4 L1
1		28		50-751-0000-2G	CONNECTOR	NOTE 7 J105
1		27		- - - - - - -	DIODE	NOTE 2 CR1
		26				
1		25		CS13BB685K	CAPACITOR	MIL-C-26655 C11
1		24		EL100AT562K	CAPACITOR	NOTE 3 C10
		23				
		22				
1		21		EL50AT473K	CAPACITOR	NOTE 3 C5
1		20		CL65CH151MP3	CAPACITOR	MIL-C-3965 C4
2		19		EL100AT103K	CAPACITOR	NOTE 3 C2, C3
1		18		RN55D1002F	RESISTOR	MIL-R-10509 R9
5		17		- - - - - - - -	RESISTOR	NOTE 2 R5, 6, 7, 11 & 10
1		16		TM 1/8 - 5.6K	SENSISTOR	NOTE 5 R14
1		15		TM 1/8 - 560 Ω	SENSISTOR	NOTE 5 R8
1		14		RC05GF 510J	RESISTOR	MIL-R-11 R16
1		13		↑ 362J	RESISTOR	↑ R13
2		12		102J	RESISTOR	R12, R15
1		11		511J	RESISTOR	R4
1		10		↓ 134J	RESISTOR	↓ R3
1		9		RC05GF104J	RESISTOR	MIL-R-11 R2
		8				
		7				
1		6		N100-10018-01	CABLE	
1		5		N100-10019-01	DELAY LINE ASSY	
1		4		N100-10016-08	SPACER	
REF		3		N100-10900	SCHEMATIC	
1		2		N100-15001-01	BOARD	
		1		-01	COMP BD ASSY	A7

LIST OF MATERIAL OR PARTS LIST

N100-15000

QTY PER MAJOR ASSY	NEXT ASSEMBLY	USED ON
	N100-10000	N100-00000

UNLESS OTHERWISE SPECIFIED
TOLERANCES ON:
2 PLACE DEC ± .03
3 PLACE DEC ± .010
ANGLES
MACHINED ± 0° 15'
FORMED ± 1°
SHEARED ± 0° 30'
HOLE TOLERANCE PER AND 10387
SURFACE ROUGHNESS PER MIL-STD-10
MACHINED SURFACE FINISH 125 ✓
DIMENSIONING AND TOLERANCING PER MIL-STD-8
ECCENTRICITY BETWEEN ANY DIA(S) ON THE SAME CENTERLINE SHALL NOT EXCEED .010 TOTAL INDICATOR READING
ALL DIM. ARE IN INCHES & INCLUDE APPLIED FINISH
WELD SYMBOLS PER MIL-STD-19
RIVET CODE PER NAS 523
THREADS PER MIL-S-7742
MARK PER MIL-STD-130
REMOVE ALL BURRS AND SHARP EDGES
SPECIFICATIONS:

PROJ ENGR		
COMP ENGR		
MAT'L/PROC-ENGR		
STRUCT / WTS		
GROUP APP	B.J. [illegible]	7/13/66
CHECKED BY	R.G. Boswell	7/11/66
DRAWN BY	CARTWRIGHT	6-28-66
ENGR GROUP	0-71100	

LTV RESEARCH CENTER

COMP BD ASSY
HIGH VOLTAGE PWR SUPPLY
A7

SIZE	CODE IDENT NO.	
D	11817	N100-15000

SCALE: 3/1 REV. SHEET

LTVRC-610

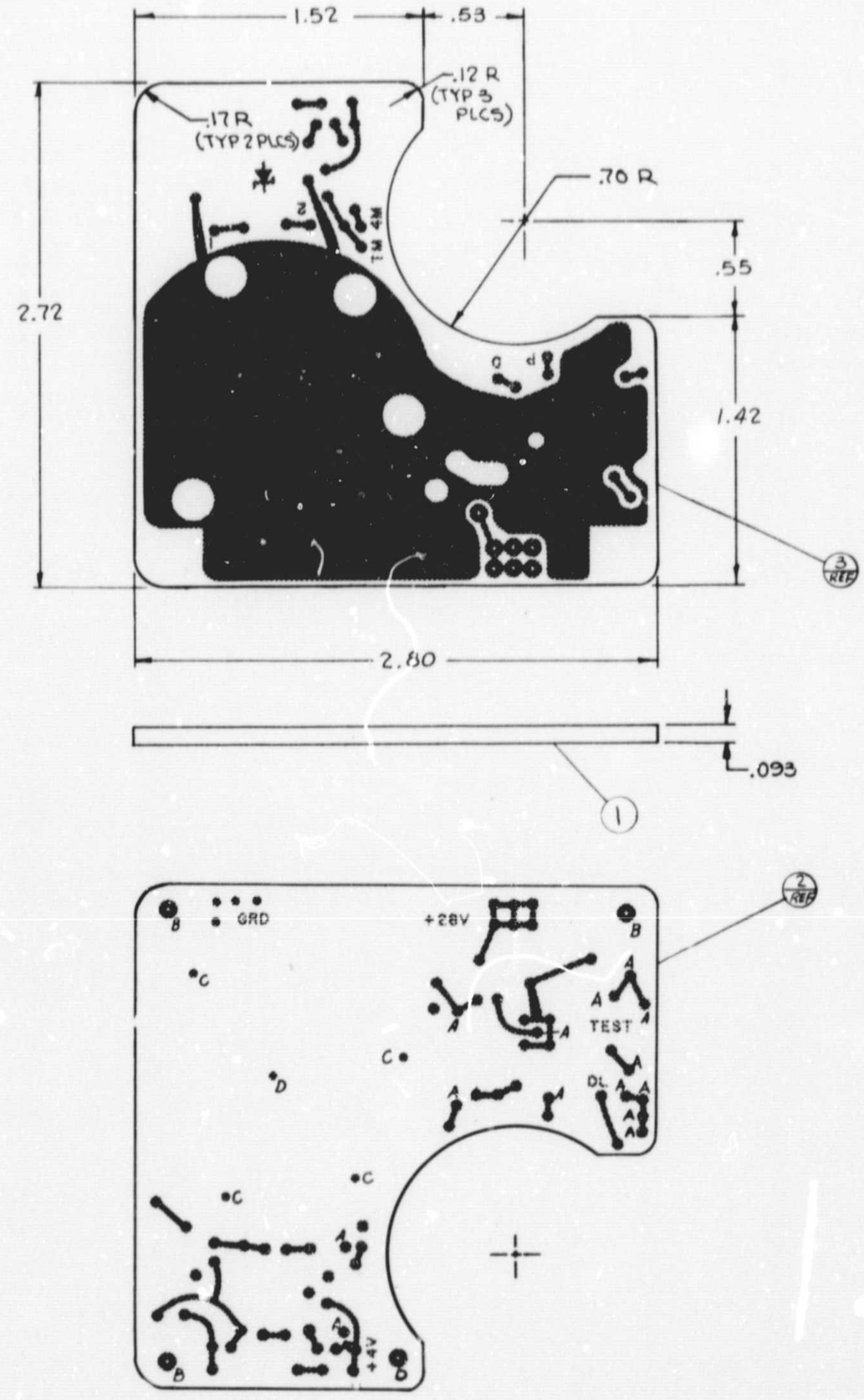

CODE	HOLE SIZ
NO CODE	.031
A	.025
B	.128
C	.195
D	.150

QTY P
MAJO
ASSY

1

NOTES:
1. FABRICATE & SOLDER COAT PER MFSC-STD-154

REVISIONS				
ZONE	LTR	DESCRIPTION	DATE	APPROVED
	A	INCORPORATED E.O. NO. N100.11	1-5-67 1/24/67	S. Lowe CHL RF R.E. Bagwell

N100-15001 A

CODE	HOLE SIZE (INCHES)
NO CODE	.031
A	.025
B	.128
C	.195
D	.150

QUANTITY REQUIRED -01	ZONE	ITEM	CODE IDENT NO.	PART OR IDENTIFYING NO.	NOMENCLATURE OR DESCRIPTION	MATERIAL AND FINISH OR NOTE OR REF DES
		4				
REF		3		N100-15006	ARTWORK	
REF		2		N100-15005	ARTWORK	
		1		-01	BOARD	

LIST OF MATERIAL OR PARTS LIST

QTY PER MAJOR ASSY	NEXT ASSEMBLY	USED ON
	N100-15000	N100-00000

UNLESS OTHERWISE SPECIFIED
TOLERANCES ON:
2 PLACE DEC ±.02
3 PLACE DEC ±.010
ANGLES
MACHINED ±0° 15'
FORMED ±1°
SHEARED ±0° 30'
HOLE TOLERANCE PER AND 10387
SURFACE ROUGHNESS PER MIL-STD-10
MACHINED SURFACE FINISH 125 ✓
DIMENSIONING AND TOLERANCING PER MIL-STD-8
ECCENTRICITY BETWEEN ANY DIA(S) ON THE SAME CENTERLINE SHALL NOT EXCEED .010 TOTAL INDICATOR READING
ALL DIM. ARE IN INCHES & INCLUDE APPLIED FINISH
WELD SYMBOLS PER MIL-STD-19
RIVET CODE PER NAS 523
THREADS PER MIL-S-7742
MARK PER MIL-STD-130
REMOVE ALL BURRS AND SHARP EDGES
SPECIFICATIONS:

PROJ ENGR		
COMP ENGR		
MAT'L/PROC ENGR		
STRUCT / WTS		
GROUP APP	R.J. Jamison	7/12/66
CHECKED BY	R.E. Bagwell	7/11/66
DRAWN BY	CARTWRIGHT	6-27-66
ENGR GROUP	0-71100	

LTV RESEARCH CENTER

BOARD
HIGH VOLTAGE PWR SUPPLY
A7

SIZE D
CODE IDENT NO. 11817
N100-15001
SCALE: 2/1
REV. A
SHEET