NASA CONTRACTOR REPORT

NASA CR-66727-2

NASA CR-66727-2

TITAN/MARS HARD LANDER

Volume II
Autonomous Capsule System Design Study

Prepared by
GENERAL ELECTRIC
RE-ENTRY SYSTEMS
for Langley Research Center

6 JANUARY 1969

NATIONAL AERONAUTICS AND SPACE ADMINISTRATION–WASHINGTON, D. C.

NASA CR-66727-2

TITAN/MARS HARD LANDER

Volume II

AUTONOMOUS CAPSULE SYSTEM DESIGN STUDY

Distribution of this report is provided in the interest of information exchange. Responsibility for the contents resides in the author or organization that prepared it.

Issued by Originator as General Electric Document No. 68SD7041 (Vol. II)

PREPARED UNDER CONTRACT NO. NAS 1-8098 BY

GENERAL ELECTRIC
RE-ENTRY SYSTEMS
3198 Chestnut Street, Philadelphia, Pa. 19101

FOR
LANGLEY RESEARCH CENTER

NATIONAL AERONAUTICS & SPACE ADMINISTRATION

FOREWORD

This report consists of three books prepared for the Langley Research Center of NASA by the Re-entry Systems Organization of the General Electric Company.

This work has been prepared under Contract No. NAS 1-8098, Mars Hard Lander Capsule Study. The first written report was submitted on July 31, 1968 and has been assigned NASA CR number 66678. This second report describes work accomplished during the contract extension period since that date.

The three books in this report contain the following information:

Volume I - Design study of a Mars 1973 Mission 1400 lb Hard Lander. This design contains approximately 60 lb of science instruments (exclusive of power, telemetry and supporting equipments) and in conjunction with a Flyby Support Module, relays 30 million bits of imagery data. About one hundred thousand bits of life detection, geological and meteorological data are transmitted direct to Earth over a 3 day period. Broad analysis and specific design investigations have led to the conclusion that this is a completely practical design approach to meet all objectives of early Mars exploration.

Volume II - A feasibility study of Autonomous Hard Lander Capsules suitable for Mars 1973 missions. This study has considered an autonomous Capsule which is essentially a self-contained landing system. The mission was analyzed and hardware identified to enable the Capsule to perform all functions from booster separation to the end of the surface mission. It is concluded that this approach is not the optimum way to fulfill early Mars exploration objectives and should not be continued at this time.

Volume III - Summary cost and schedule of feasible implementation plans for Hard Landers in 1973.

TABLE OF CONTENTS

Section		Page
1	SUMMARY AND INTRODUCTION	1-1
	1.1 Objective of Autonomous Study	1-1
	1.2 Study Alternates	1-1
	1.3 Summary	1-2
	1.4 Langley Research Center Guidelines	1-4
	1.4.1 Modified Guidelines	1-4
2	MISSION CONSIDERATIONS	2-1
	2.1 Reference Mission	2-1
	2.1.1 Relay Communication Geometry Between Capsule and Support Module	2-1
	2.1.2 Direct to Earth Communication Geometry	2-3
	2.2 Entry Communications	2-12
	2.2.1 Direct Entry Link	2-12
	2.3 Landed Imagery	2-20
	2.4 Mission Profile	2-23
	2.4.1 Truly Autonomous	2-23
	2.4.2 Direct Entry with Deflected Relay Support Module	2-27
3	SUPPORT MODULE DESIGN	3-1
	3.1 Requirements	3-1
	3.2 Attitude Control	3-5
	3.2.1 Alternatives Considered	3-5
	3.2.2 Three-Axis Control	3-6
	3.2.3 Spin Stabilized	3-9
	3.2.4 Spin Axis Orientation	3-11
	3.3 Propulsion	3-13
	3.3.1 Requirements	3-13
	3.3.2 Propulsion Subsystem for Spin Stabilized	3-14
	3.3.3 Propulsion Subsystem for Three-Axis Stabilized	3-17
	3.4 Configuration	3-19
	3.4.1 Three-Axis Stabilized, Non-Sterile, Support Module	3-23
	3.4.2 Spin Stabilized, Non-Sterile, Support Module	3-23
	3.4.3 Spin-Stabilized Sterile Support Module	3-23
	3.4.4 Sterile Support Module for Truly Autonomous	3-27
	3.5 Summary of Support Module	3-29

TABLE OF CONTENTS (Continued)

Section		Page
4	FLIGHT CAPSULE DESIGN DESCRIPTION	4-1
	4.1 Design Summary	4-1
	4.2 Truly Autonomous Capsule	4-2
	4.2.1 Aeroshell Structure	4-2
	4.2.2 Heat Shield	4-2
	4.2.3 Entry Science Tabulation	4-2
	4.2.4 Landed System	4-4
	4.2.5 Surface Science Instruments	4-5
	4.3 Direct Entry Lander with Deflected Relay Support Module	4-11
	4.4 Lander Equipment Deployment	4-23
	4.4.1 Solar Panel Arrangement, Stowed Configuration and Deployment Sequence	4-23
	4.4.2 Earth Pointing Antenna Deployment and Control	4-30
	4.4.3 Camera Installation	4-33
	4.5 Telecommunication Subsystem	4-35
	4.5.1 Autonomous	4-35
	4.5.2 Deflected Relay Support Module	4-35
	4.6 Electrical Power Subsystem	4-38
	4.6.1 Truly Autonomous Capsule	4-38
	4.7 Entry Vehicle Attitude Control	4-47
	4.8 Canister and Adapter	4-48
	4.8.1 Design Constraints	4-48
	4.8.2 Canister Structural Description	4-48
	4.8.3 Adapter	4-50
	4.8.4 Pressure and Venting System	4-50
	4.8.5 Subsystem Separations	4-52
5	WEIGHT STATEMENTS	5-1
	5.1 Autonomous Capsule	5-1
	5.1.1 Weight Summary and Equipment List	5-1
	5.2 Direct Entry Lander with Deflected Relay Support Module	5-10
	5.2.1 Weight Summary and Equipment List	5-10

LIST OF ILLUSTRATIONS

Figure	Title	Page
2.1-1	Trailing Support Module	2-2
2.1-2	Mars 1973 Earth-Mars Communication Distance Sun and Earth Declinations	2-5
2.1-3	Mars 1973 Approach Configuration	2-6
2.1-4	Mars 1973, Type I Basic Mission Planning Chart	2-8
2.1-5	Earth Visibility at Landing	2-9
2.1-6	Earth Visibility at Landing	2-10
2.1-7	Earth Visibility at Landing, Late Arrival	2-11
2.2-1	Data Detection Functional Concept	2-17
2.2-2	Multiple Systems with Pre-detection Recording	2-18
2.2-3	Entry Relay Link	2-19
2.3-1	Direct Link Design Parameters	2-21
2.3-2	Optimum Beamwidth of Vertically Oriented Antennas	2-22
2.4-1	Autonomous Flyby Landed Sequence of Events	2-27
2.4-2	Autonomous Flyby Capsule Landed Sequence of Events	2-31
3.1-1	Support Module Mission Modes	3-1
3.1-2	Simplified Block Diagram, Support Module	3-4
3.2-1	Three-axis Subsystem Block Diagram	3-7
3.2-2	Spin Stabilized Subsystem Block Diagram	3-10
3.3-1	Propulsion Subsystem Schematic Diagram, Spin Stabilization	3-15
3.3-2	MM69 Propulsion Subsystem Schematic Diagram (Ref: TRW Report MM0.4701.68-043)	3-18
3.4-1	Methods of Support for Flight Spacecraft	3-21
3.4-2	Typical Spacecraft Configuration Non-sterile, 3-Axis Stabilized Support Module	3-24
3.4-3	Typical Spacecraft Configuration Non-sterile, Spin-stabilized Support Module	3-25
3.4-4	Typical Spacecraft Configuration, Sterile Support Module	3-26
3.4-5	Typical Spacecraft Configuration, Autonomous Capsule	3-28
4.2-1	Flight Capsule-General Assembly Drawing (Direct Link)	4-3
4.2-2	Lander-General Assembly (Direct Link)	4-7
4.2-3	Lander Layout of Components (Direct Link)	4-9
4.3-1	Flight Capsule-General Assembly (Relay Link)	4-13
4.3-2	Lander-General Assembly (Relay Link)	4-15
4.3-3	High Gain S-Band Deployment Details	4-17
4.3-4	Solar Panel Array Deployment Details	4-19
4.3-5	Camera Deployment Details	4-21
4.4-1	Proposed Solar Panel Assembly in Deep Ring Lander	4-24
4.4-2	Proposed Solar Panel Assembly Deployment Sequence	4-25

LIST OF ILLUSTRATIONS (Continued)

Figure		Page
4.4-3	Proposed Solar Panel Structure and Mechanisms Details	4-27
4.4-4	Earth Pointing Antenna Mechanism	4-31
4.4-5	Earth Pointing Antenna Control	4-32
4.5-1	Telecommunications System, Direct Link Concept	4-36
4.5-2	Telecommunications System, Relay Concepts	4-37
4.6-1	Power Profile	4-39
4.6-2	Capsule Electrical System Block Diagram	4-41
4.6-3	Power Profile Relay Autonomous Capsule	4-43
4.6-4	Capsule Electrical System Block Diagram	4-45
4.8-1	Canister Field Joint	4-49
4.8-2	Hot-Wire Tension Bolt	4-54
4.8-3	Spring Assembly	4-55
4.8-4	Hot-Wire Separation Nut	4-57
5.1-1	Mars Hard Lander Deflected Relay	5-8
5.1-2	Mass Properties Reference Axis	5-9
5.2-1	Mars Hard Lander Direct Link	5-11

LIST OF TABLES

Table	Title	Page
1-1	Comparison Autonomous Lander with Other Approaches	1-3
1-2	Science Payload Definition	1-6
2.1-1	Time from Entry to Landing	2-4
2.2-1	Link Calculations (All Values Worst Case)	2-15
2.4-1	Truly Autonomous Mission Sequence of Events	2-24
2.4-2	D/E Lander with Deflected Relay Support Module, Mission Sequence of Events	2-28
3.1-1	Relay Support Module Functions	3-3
3.2-1	Comparison of Attitude Control Alternatives	3-8
3.2-2	Spin Stabilization Spin Axis Orientation Alternatives	3-12
3.3-1	Maneuvers for the Propulsion Subsystem, Support Module	3-13
3.3-2	Propulsions System Weight Breakdown	3-16
3.5-1	Support Module Hardware	3-30
3.5-2	Power System Summary	3-32
3.5-3	Comparative Support Module Weights	3-33
5.1-1	Mission Sequence Mass Properties	5-7
5.2-1	Mission Sequence Mass Properties	5-18

1. SUMMARY AND INTRODUCTION

1. SUMMARY AND INTRODUCTION

1.1 OBJECTIVE OF AUTONOMOUS STUDY

As part of the Hard Lander studies performed for the Langley Research Center of NASA, General Electric was assigned a task of evaluating Autonomous Landers. This evaluation was an overall view of all mission, system, and implementation aspects in order to formulate a recommendation as to whether further study is warranted.

The types of spacecraft being considered for the '73 Mars opportunity are:

1. Out-of-Orbit Lander with Orbiting Support Module (Orbiter)

2. Direct Entry Lander with Orbiting Support Module

3. Direct Entry Lander with Flyby Support Module

4. Autonomous Lander with Cruise (only) Support Module.

For these studies, GE elected to subdivide the class of Autonomous Landers into the following:

a. Truly autonomous (all communication is direct to earth from Lander), the Support Module has no functions after Entry Vehicle separation.

b. Direct Entry Lander with Support Module serving as trailing relay station after Entry Vehicle separation. (Prior to entry, the Support Module is time separated from the Lander so that it may serve as a relay station throughout the Lander's entry phase. The Support Module impacts the planet.)

c. Direct Entry Lander with relay Support Module deflected to flyby planet. (This Support Module must be sterilized since it is on an impacting trajectory and, in the event of an equipment failure, could violate planetary quarantine).

These three types of Autonomous landing capsules were also compared to a non-sterilized Flyby Support Module where the Capsule is deflected into the planet. This broad scope was considered to insure that no attractive option was overlooked.

1.2 STUDY ALTERNATES

To keep the study specific and meaningful, an Autonomous Reference Mission was formulated. This Reference Mission (Section 2 of this volume) was intended to be within the capability of a Titan IIIC booster and to optimize the direct earth communication. For the Autonomous Capsule, a South latitude landing site was required to

provide Earth visibility of entry. For relay concepts the desired 10° to 20°N latitude was used. The launch energy of 20 km^2/sec^2 is actually beyond the Titan IIIC capability for the transfer weights estimated in later stages of the study. An iteration considering missions that require less launch energy and/or Landers/Support Modules with lesser capabilities has not been performed, as the eventual conclusion is already apparent.

The possible Spacecraft configurations were evaluated. These configurations include placing the Support Module inside (sterilized) and outside (non-sterilized) the canister (biobarrier). Leaving part of the canister in Earth orbit or carrying it to interplanetary transfer was also studied. None of these variations had a first order effect upon the Lander mission if arguments concerning recontamination are momentarily set aside.

The stabilization mode for the cruise phase was evaluated (Section 3.0). The two basic options of spin-stabilized and 3-axis stabilized were considered. It was concluded that a spin-stabilized mode was slightly lighter (in the order of 50 lb) but would require more development than adopting the Mariner 3 axis-stabilization subsystem, equipments, and software. In considering available spin options, it was concluded that it is better to point the spin axis at Earth rather than at the Sun or perpendicular to the ecliptic.

The Autonomous Lander utilized for this study had an entry weight of 1676 lb with maximum entry angle of 32°. The landed weight is 956 lb which includes 60 lb of science and extended lifetime capabilities. The Lander which utilizes the Support Module as a relay station has a landed weight approximately 150 lb less. The weight difference is partially offset by increase in Support Module weight and does not have a first order influence on study conclusions. It is apparent that, if surface imagery of 10^7 bits or more is to be transmitted from a Lander of this weight class, a regenerative power source is required to extend the lifetime.

1.3 SUMMARY

This study has identified that:

1. No substantial weight reduction is available for the truly Autonomous Capsule. The entry data direct to Earth requires so much equipment and power to establish a marginal link as to more than offset any saving in the Support Module. (See table 1-1 for weight comparisons.)

2. The trailing Support Module is definitely inferior to the deflected Support Module in its capability to support the relay link. Since the hardware implementation is nearly identical (slight difference in size of propellant tanks), the deflected relay Support Module is preferrable.

TABLE 1-1. COMPARISON AUTONOMOUS LANDER WITH OTHER APPROACHES

	Truly Autonomous	Autonomous With Deflected Relay Support Module	Direct Entry Lander With Unsterile Flyby Support Module	Direct Entry Lander With Orbiter Support Module
Pre-entry	*408	*407	**518	**571
Support Module	518	639	659	***1157
Entry Weight	1676	1426	1024	1024
Launch Weight	2602	2472	2201	2752
Entry Aeroshell Diameter	152.4 in.	135.6 in.	108 in.	108 in.
Science Weight Entry/Surface	16.5/46.0	16.5/46.0	16.5/46.0	16.5/46.0
Landed Weight	956	809	661	661
Surface Lifetime	90 days	90 days	3 days	3 days
Data Return:				
Entry	Not practical	1000 bit/sec	1000 bits/sec	1000 bit/sec
Surface Imagery	$\sim 10^6$/day	$\sim 10^6$/day	2.8×10^7 (Relay) 10^5 bits per day (Direct)	2×10^8 10^5 bits per day

*Includes canister and adapters.
**Includes canister, adapters, and thrust cone.
***Includes propellant for Mars Orbit Injection.

Weights in columns 3 and 4 are Flight Capsule Weight from Book 1, Support Modules are 3 axis-stabilized. Column 1 and 2 Support Modules are spin-stabilized.

3. Once the concept of a relay Support Module, which must function independently from and simultaneously with the Lander, is adopted, there is no substantial equipment saving over conventional approaches; the sterilization requirement only complicates the problem.

4. A non-sterilized Support Module has the advantage of being able to utilize tape recorders for data storage; hence, it can support accumulation of much more information and retransmit to Earth for days or weeks after encounter. An Earth and Sun occulation may occur after encounter, but mission and hardware design can be modified so that this should not be a serious impediment.

Based upon the studies performed, GE has recommended that Langley Research Center not implement further work on the Autonomous concept for 1973.

1.4 LANGLEY RESEARCH CENTER GUIDELINES

The NASA-LRC provided guidelines for the study are reproduced in the following portion of this report. The single guideline which had the greatest impact on the Autonomous Lander is "Entry data must be obtained independent of landing success." The communication problem of establishing a direct-to-Earth link during entry into Mars drives the Lander design. Even when accepting significant implementation penalties, a a barely adequate 200 bps data return is not assured until parachute retardation has slowed the descent. This is not considered a practical mode and therefore it is concluded that real time entry data transmission should utilize a relay link.

"In addition, an Autonomous Capsule shall be studied for a Direct Entry mission with a maximum weight of 1700 lb and a Capsule diameter not to exceed fifteen (15) ft.

1.4.1 MODIFIED GUIDELINES

1. Launch vehicle to be T-IIIC.
2. Two Spacecraft to be launched.
3. Mode of delivery shall be direct entry.
4. Entry and surface science are of a higher priority than orbital science.
5. Minimum Lander lifetime on the surface shall be three days.
6. Minimum data return shall be 10^7 bits. Data compression techniques may be feasible to reduce the number of bits to be transmitted to Earth.
7. Entry data must be obtained independent of landing success.
8. Minimum time-of-arrival separation shall be 10 days to allow preliminary analysis of the entry data and surface science data from the first Lander before second Lander entry is committed.

9. The existing DSN net of three 85 ft and one 210 ft antenna facilities can be used. An additional 210 ft antenna may also be assumed.

10. Minimum launch period to be 30 days.

11. Minimum launch window to be two hours.

12. Available launch azimuth range to be 45° - 115°.

13. For the Mars '73 Mission, the probability that Mars will be contaminated shall not exceed 4×10^{-5}

14. An Orbiter or Support Module may be used to support the Lander during cruise and to provide relay communications.

15. Data return goal is 10^8 bits.

16. It shall be a goal that the Lander be designed to have a 90-day lifetime with the use of regenerated power.

17. Science Payload - The science payload defined in table 1-2 represents a highly desirable complement of scientific measurements for the Mars '73 Mission. It is anticipated that because of the present economic constraints for the '73 Mission, the entire instrument complement cannot be accommodated, necessitating that the payload be considered a shopping list. To be able to realistically utilize the defined payload, it shall be assumed that within the entry and surface groups the experiments are given in an order to priority. The specific instruments and their associated characteristics are defined to provide continuity for subsequent studies and should not be considered a final payload selection for the '73 Mission. Similarly, it can be anticipated that future planning activities and design studies will result in modifications to the payload both in the instrument selection and the specified characteristics."

TABLE 1-2. SCIENCE PAYLOAD DEFINITION

Objective	Instrument	Power, (Watts)	Weight, (lbs)	Data, (bits*)
ENTRY				
Atmospheric Structure	Capacitance Diaphragm	3	3	2×10^4
	Platinum Resistance Thermometer	1	1	10^4
	Accelerometer Triad	4	4	10^5
Atmospheric Composition	Mass Spectrometer	8 avg., 11 peak	8	6×10^4
H_2O Vapor	Al_2O_3 Hygrometer	1	2	5×10^3
SURFACE				
Imagery	Facsimile	10	5	10^7
Atmospheric Comp./Organic Compounds	GCMS/Pyrolysis	35 w/pyrolysis 20 GCMS only	16	10^5
Biology	Hybrid (Multi-cell) Life Detection	10	8	10^3
	Soil Sampler**	10	2	10^2
Atmospheric H_2O	Al_2O_3 Hygrometer	1	1	10^3
Subsurface H_2O	Al_2O_3 Hygrometer w/probe	5	3	10^3
Atmospheric Temperature	Platinum Resistance Thermometer	0.5	1	10^3
Atmopsheric Pressure	Capacitance Diaphragm	1.4	1	10^3
Wind Velocity	Cup Anemometer	2.2	2	10^3

*Data compression techniques may be feasible to reduce the number of bits to be transmitted to Earth.

**The soil sampler is required to provide a sample to both the GCMS/pyrolysis and biological instruments.

2. MISSION CONSIDERATIONS

2. MISSION CONSIDERATIONS

2.1 REFERENCE MISSION

In the context of assessing the feasibility of an Autonomous Capsule, this section discusses two mission related aspects: the relay communication between the Capsule and a Support Module, and the direct communication between the Capsule and the Earth. A specific example is shown for the relay communication, in which the Support Module follows the Capsule in the same trajectory, i.e., a "trailing relay Support Module". It is seen that the Support Module is never high enough above the Capsule's horizon for relay communication to be securely established. Therefore, the relay communication must necessarily be with a Support Module on a flyby trajectory. The success of the relay depends then on the entry time and its dispersion throughout the range of atmospheres, in the same manner as has been described in earlier studies.

With respect to a direct to Earth link, it is shown that in the practical '73 missions (Type 1, $C_3 < 20\ km^2/sec^2$) the Earth is generally near the landing point horizon. By choosing the latest possible arrival dates consistent with mission constraints, the Earth elevation at the landing site (near time of landing) may be about 30°, just enough to have a short amount of time available for direct communication (the Earth is setting).

2.1.1 RELAY COMMUNICATION GEOMETRY BETWEEN CAPSULE AND SUPPORT MODULE

The Capsule-Support Module geometry is illustrated in fig. 2.1-1 for the case where the Support Module follows the Capsule in a trailing trajectory. The case illustrated here is typical for the '73 Type 1 missions; the approach velocity is 3 km/sec and the Capsule entry path angle is 25°. To obtain sufficient time of arrival separation, the Support Module is separated from the Capsule with a separation velocity of 60 m/sec. It is seen in fig. 2.1-1 that the incoming trajectory lies close to the landing point horizon; therefore, the Support Module's elevation over the landing horizon is always small. In the case illustrated, the maximum elevation is 12°, which is too low for a good relay link. For smaller entry path angles, the Support Module trajectory will lie even closer to the Lander horizon.

Thus, if a relay link is to be considered, the Support Module must be on a flyby trajectory. The design of the flyby trajectory depends on the time from entry to landing, in particular on the spread in entry time due to the unknown atmosphere. This aspect of the mission design has been discussed in detail in earlier studies. It was found that with an entry time differential of 800 sec, the flyby trajectory could be designed such that the Spacecraft would always be at an elevation greater than 34° at the time of landing. The periapse altitude was 1000 km.

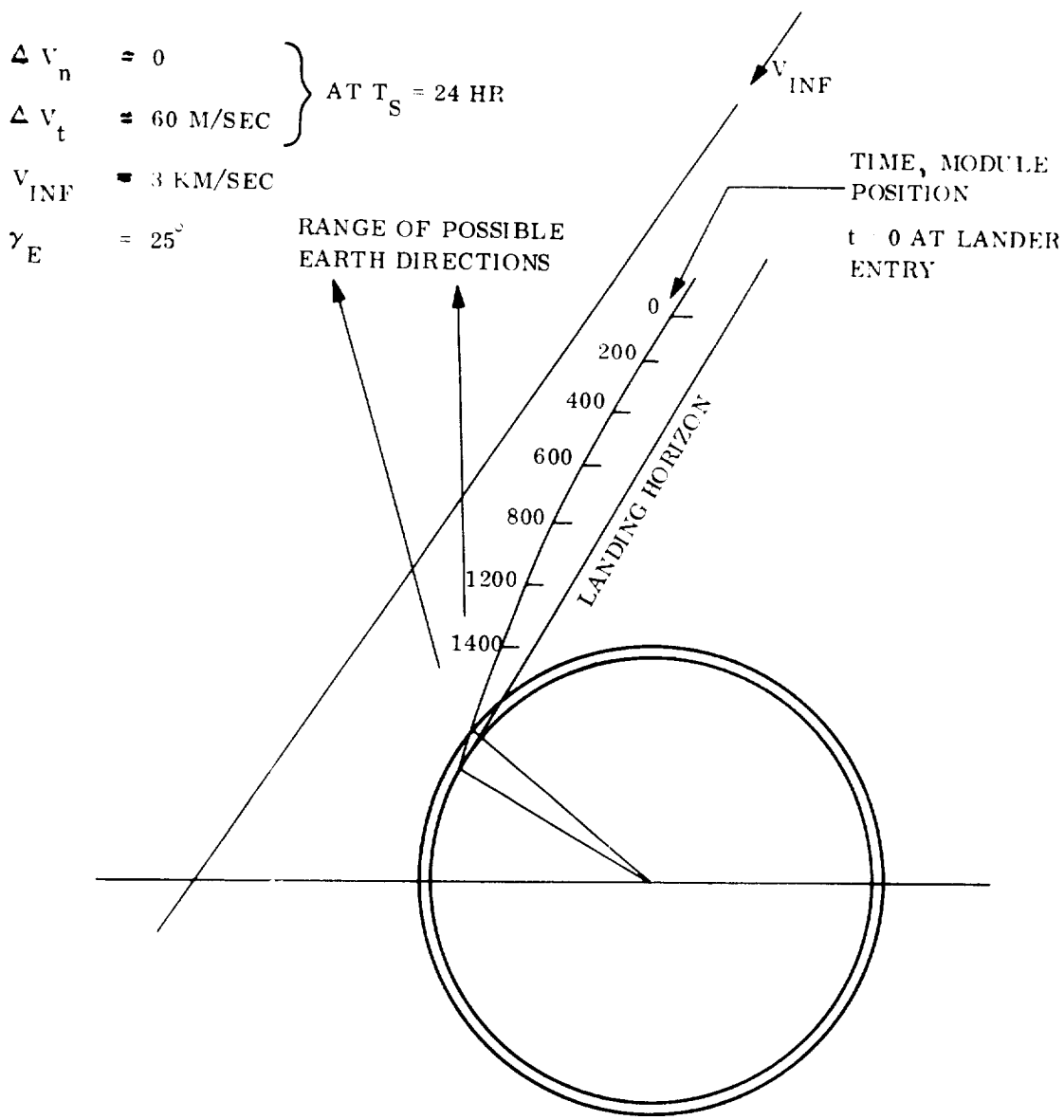

Figure 2.1-1. Trailing Support Module

Entry times in different atmospheres are shown in table 2.1-1 for three cases. The parachute is assumed to be deployed at Mach 2 in any atmosphere. The third case, with aeroshell ballistic coefficient equal to 8.7 lb/ft^2 and a parachute designed for 100 ft/sec terminal velocity at zero altitude in the MEAN atmosphere, is the one to be considered for the Autonomous Capsule. The entry time differential (i.e., the difference in entry times in the MIN and MAX atmospheres) is 745 sec and therefore, the flyby trajectory design and the Capsule-Support Module geometry are nearly the same as in the earlier studies. For the sake of comparison, table 2.1-1 also shows two other cases. The first is designed for 150 ft/sec terminal velocity in the MEAN atmosphere and shows a 487 sec entry time differential in the MIN-MEAN-MAX range of atmospheres. The second case is designed for 100 ft/sec terminal velocity in the VM-7 atmosphere and has a 1294 sec differential of entry times in the VM range of atmospheres. If the design must be based on full range of VM atmospheres it can not be guaranteed that the Lander will always see the Support Module at the time of landing (unless the periapse altitude is increased to about 2000 km).

Note that in this discussion the parachute was designed for a specific terminal velocity in the MEAN atmosphere; this is because at zero altitude the atmospheric density is smallest in the MEAN atmosphere. If the parachute were designed for a specific terminal velocity at some altitude, say 6000 ft, the MIN atmosphere would be used. This has little influence on the entry time differential, which is the important parammeter in previous discussion.

2.1.2 DIRECT TO EARTH COMMUNICATION GEOMETRY

The design of a direct communication link is greatly dependent on the declination of Earth with respect to the Mars equator at the time of landing. This declination is shown in fig. 2.1-2 for the arrival times of interest in 1974. Note that the Earth's declination increases, so that for northern landing latitudes late arrivals would be preferred. In considering landed operations for some extended duration, northern landing latitudes are preferred because the Sun's position is generally north of the equator, as shown in fig. 2.1-2. On the other hand, if an early arrival date should be required, a southern landing latitude would be preferable from the point of view of a direct communication link.

One way in which a Lander Capsule may be made independent of a Spacecraft or Support Module is to provide a direct communication link. For this, it is necessary that the Earth is well above the landing horizon at the time of landing, as well as during the entry portion of the Capsule trajectory. Figure 2.1-3 shows a typical arrival configuration with arrival date 1 February 1974. It is seen that the Earth is very near the landing horizon, so that in this case there exists no direct link. This situation may possibly be improved by either choosing a very early arrival, so that the Earth is on the other side of the approach asymptote, and a retrograde approach, or by choosing a late arrival, such that the angle ZAE (see fig. 2.1-3) is much smaller,

TABLE 2.1-1. TIME FROM ENTRY TO LANDING

γ_E = 25 DEGREES PARACHUTE DEPLOYMENT AT MACH 2

V_{INF} = 3.216 KM/SEC

V_E = 19,325 FT/SEC

VEHICLE AND PARACHUTE DEFINITION 60° SPHERE/CONE	ATM	T_{EI} SEC	β_{EI} DEG	V_I FT/SEC
W/C_DA = 9 LB/FT^2	MIN	227	9.7	142
V_{TERM} = 150 FT/SEC, MEAN	MEAN	365	9.3	147
$C_{D\ PAR}$ = 12.7	MAX	714	8.4	120
W/C_DA = 8.7 LB/FT^2	VM 8	349	9.7	70
V_{TERM} = 100 FT/SEC, VM 7	VM 7	483	9.3	98
$C_{D\ PAR}$ = 76.6	VM 9	1643	8.3	49
W/C_DA = 8.7 LB/FT^2	MIN	284	9.7	93
V_{TERM} = 100 FT/SEC, MEAN	MEAN	492	9.2	98
$C_{D\ PAR}$ = 27.5	MAX	1029	8.4	79

T_{EI} = TIME FROM ENTRY TO LANDING

β_{EI} = CENTRAL ANGLE FROM ENTRY TO LANDING

V_I = LANDING VELOCITY

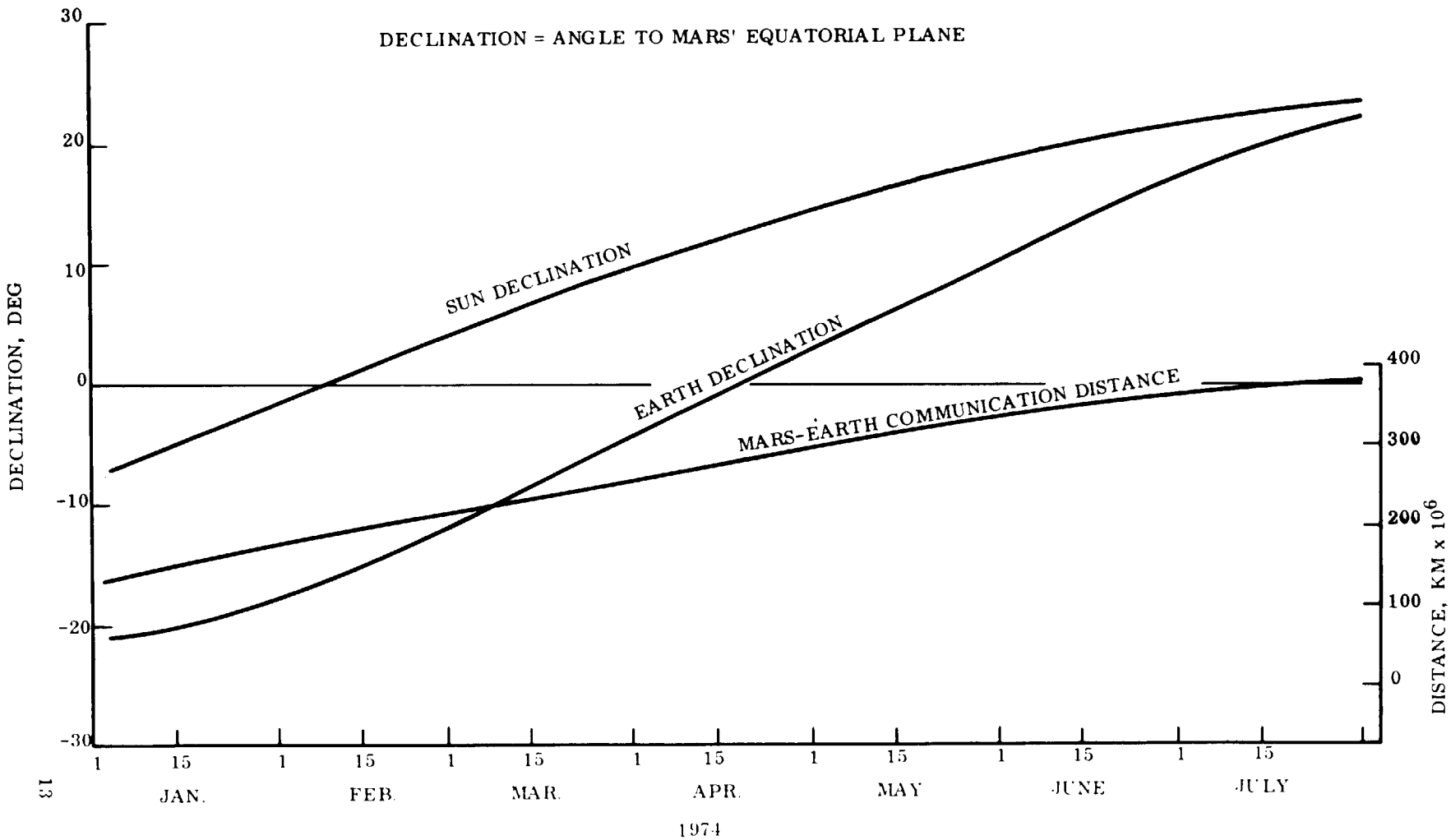

Figure 2.1-2. Mars 1973 Earth-Mars Communication Distance Sun and Earth Declinations

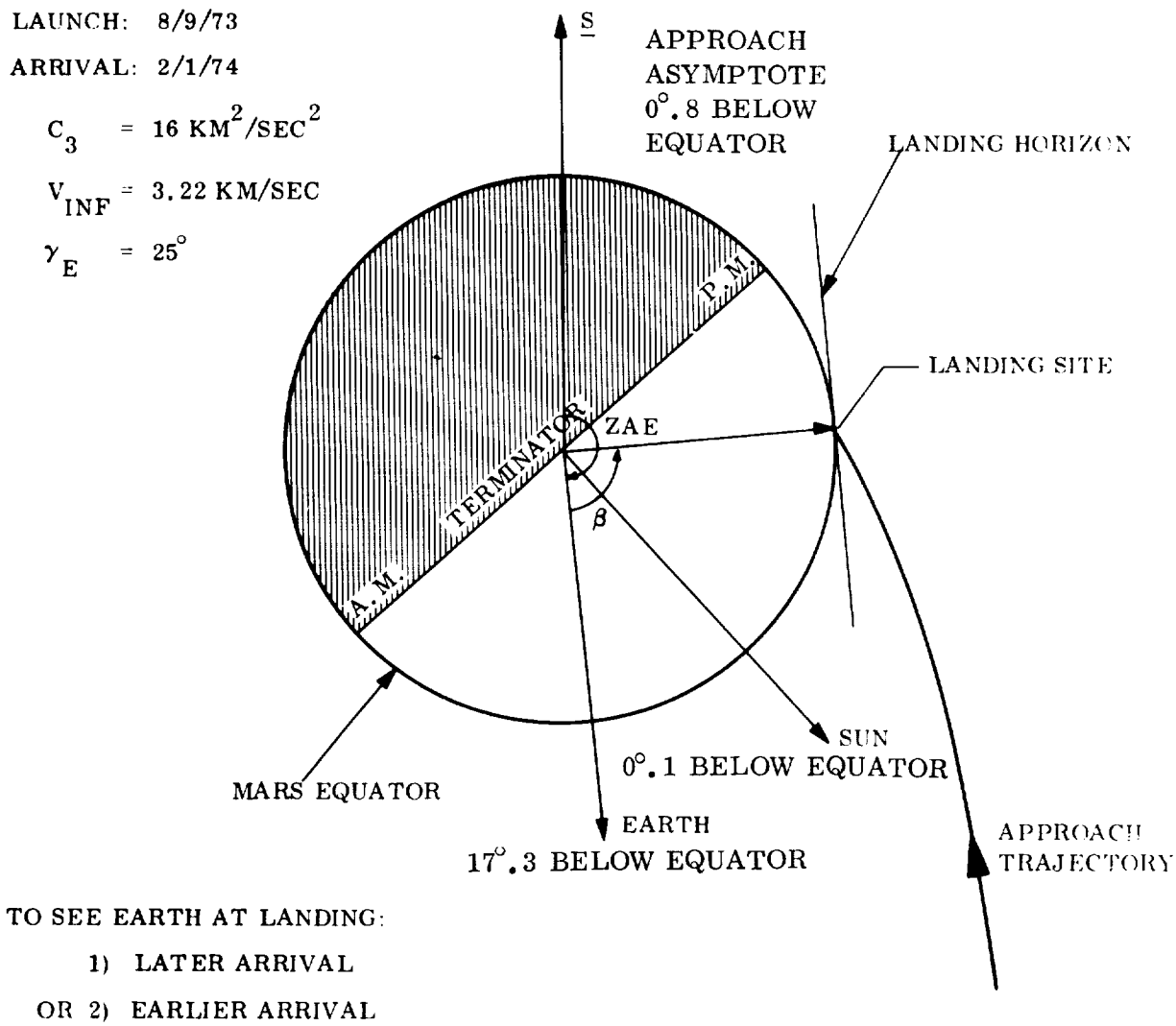

TO SEE EARTH AT LANDING:

1) LATER ARRIVAL

OR 2) EARLIER ARRIVAL

Figure 2.1-3. Mars 1973 Approach Configuration

with a posigrade approach. The possibilities for early and late arrivals are identified in the Basic Mission Planning Chart, fig. 2.1-4. The mission points available for consideration lie inside the curve for $C_3 = 20\ km^2/sec^2$, corresponding to a Spacecraft weight of 2100 lb. A small part of this area is cut off by the line of constant declination of launch asymptote equal to 45°. This limit is consistent with launch azimuth limits of 45° and 115°, and a 2 hr minimum daily launch window, (according to information from a Martin-Marietta supplied by NASA-LRC by letter dated 28 August 1968.) Two pairs of lines, marked 1 and 2, identify the earliest and latest possible arrival dates, consistent with a 30 day launch period. The lines in each pair are days apart in arrival date, in accord with the requirements of having a 10 day separation in arrival of two missions. The early arrival lines are approximately parallel to the constant entry velocity lines; the late arrival lines are about parellel to constant ZAE angle lines.

The elevation of Earth at the landing site at the time of landing is shown for a typical early arrival mission with retrograde approach (launch 10 July 1973, arrival 6 January 1974) in fig. 2.1-5. This shows that with an entry path angle equal to 25° the best elevation which can be obtained is about 10°. To obtain this, a southern landing latitude of 20° is required. For northern landing latitudes the Earth's elevation is even smaller. Thus, for all possible early arrivals the Earth's elevation over the landing horizon is too small for a direct communication link to be possible. The only consideration which may slightly offset this is the fact that the Earth is rising, so that within a few hours after landing, a direct link does become possible.

The Earth's elevation at landing is similarly shown for two typical late arrival missions (with posigrade approach) in fig. 2.1-6. The best results are obtained for a 10° southern latitude; the elevation may be about 35°, if the entry path angle is 25°. For the preferred nothern latitude the elevation maybe as small as 20° (arrival on 27 February 1974) or a little more than 30° for a more advantageous arrival date (13 March 1974). Note that the elevation is less sensitive to arrival date for the southern landing latitude missions.

The arrival configuration for a typical late arrival case (launch 13 August 1974, arrival 17 March 1974) is shown in fig. 2.1-7. Note that the Earth is located well above the landing horizon, so that a direct link is possible (at least geometrically). But is must also be noted that, if entry path angle dispersions are considered, the landing point may move toward the evening terminator, so that the Earth moves closer to the landing horizon. Within the mission constraints (see fig. 2.1-4) better Earth elevations can be obtained only by having a steeper entry, which moves the landing point away from the evening terminator and towards the Earth (on a posigrade approach). However, any entry path angle greater then 25° has a bad influence on the aeroshell weight. In fact, it would be desirable to decrease the entry path angle; considering entry path angle dispersion, (depending mostly on the impact parameter error) the entry path angle could be taken as small as 21°, but that would cause the Earth elevation to be too small for a direct link to exist (as follows from fig. 2.1-6).

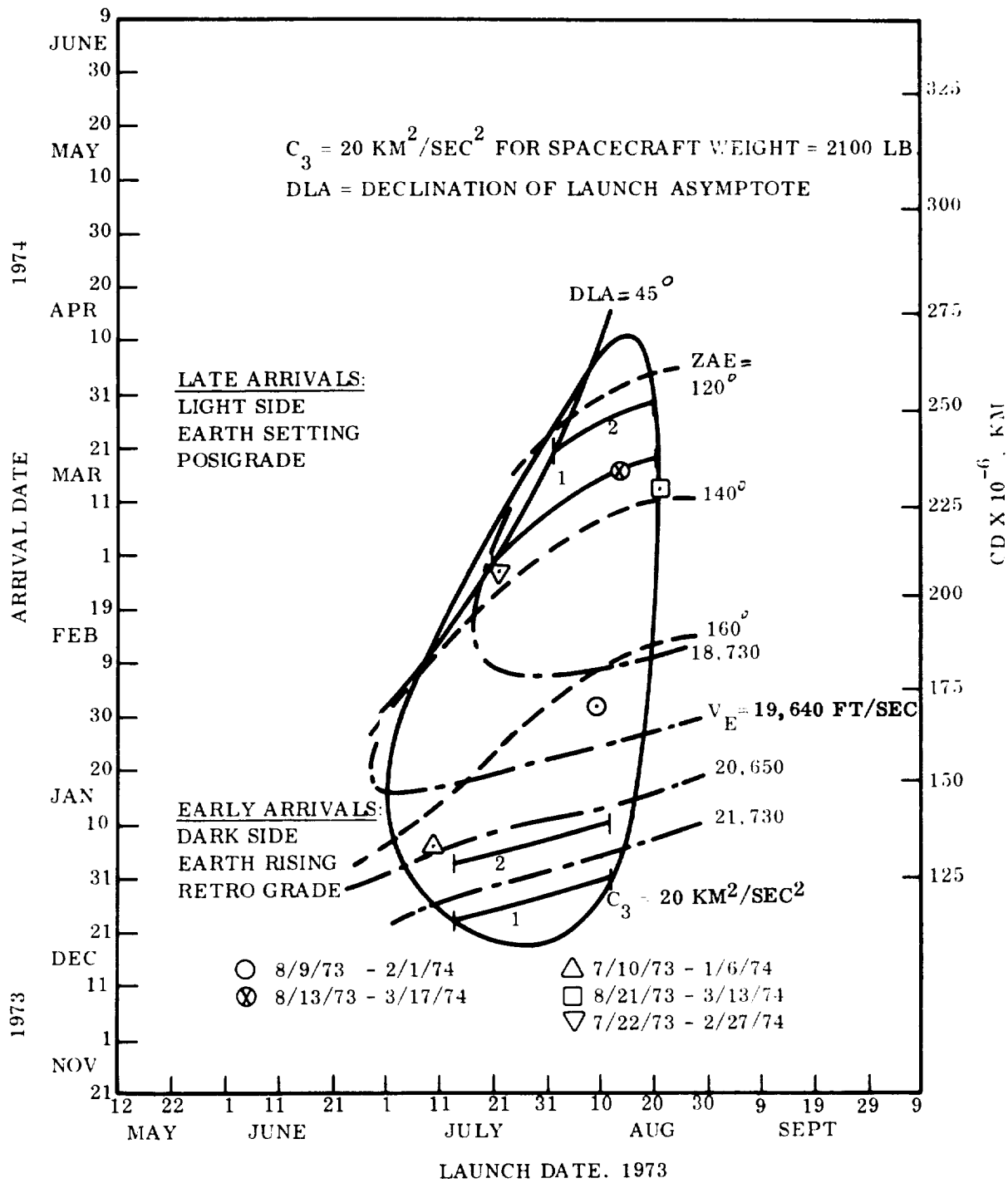

Figure 2.1-4. Mars 1973, Type I Basic Mission Planning Chart

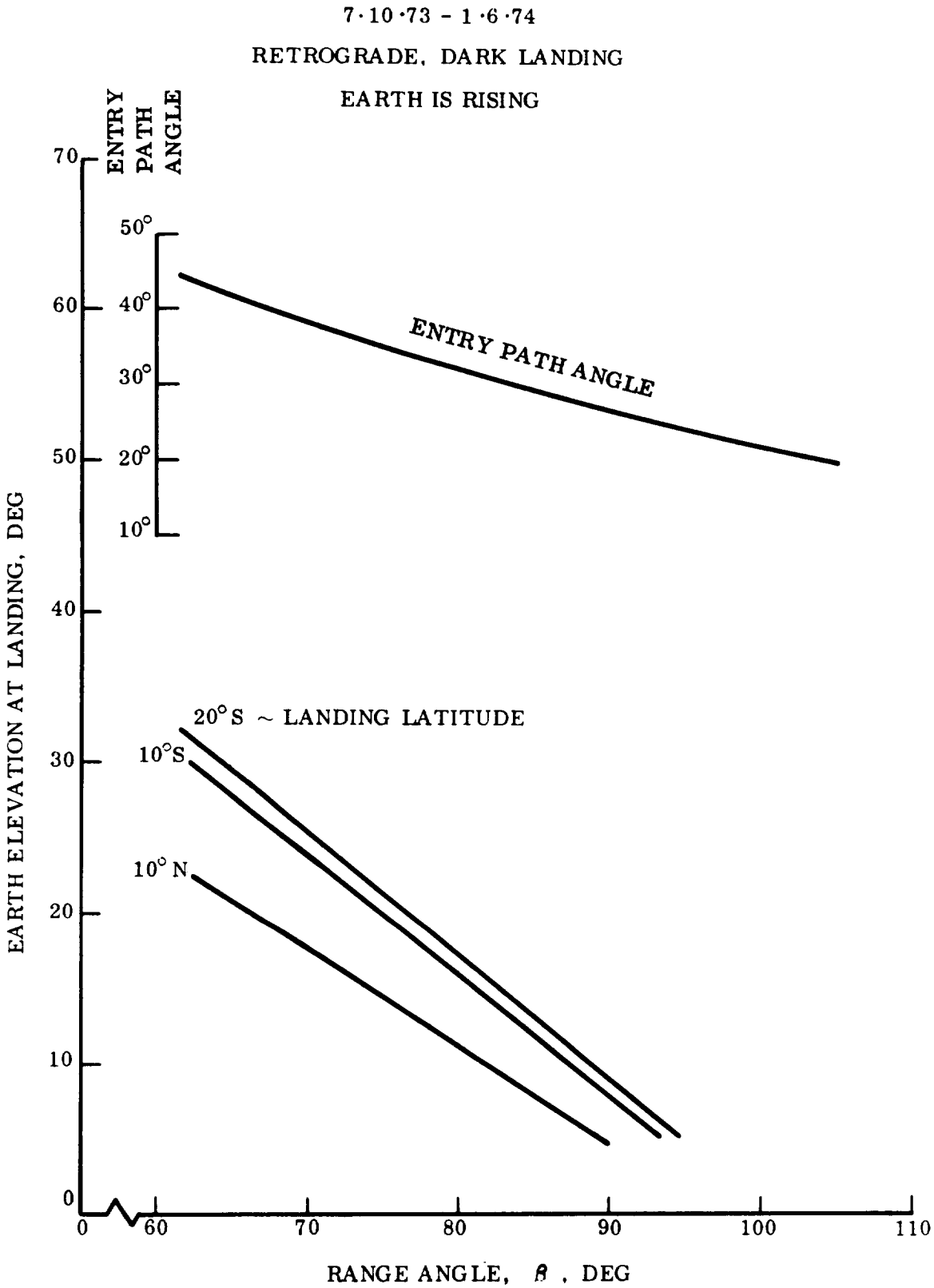

Figure 2.1-5. Earth Visibility at Landing

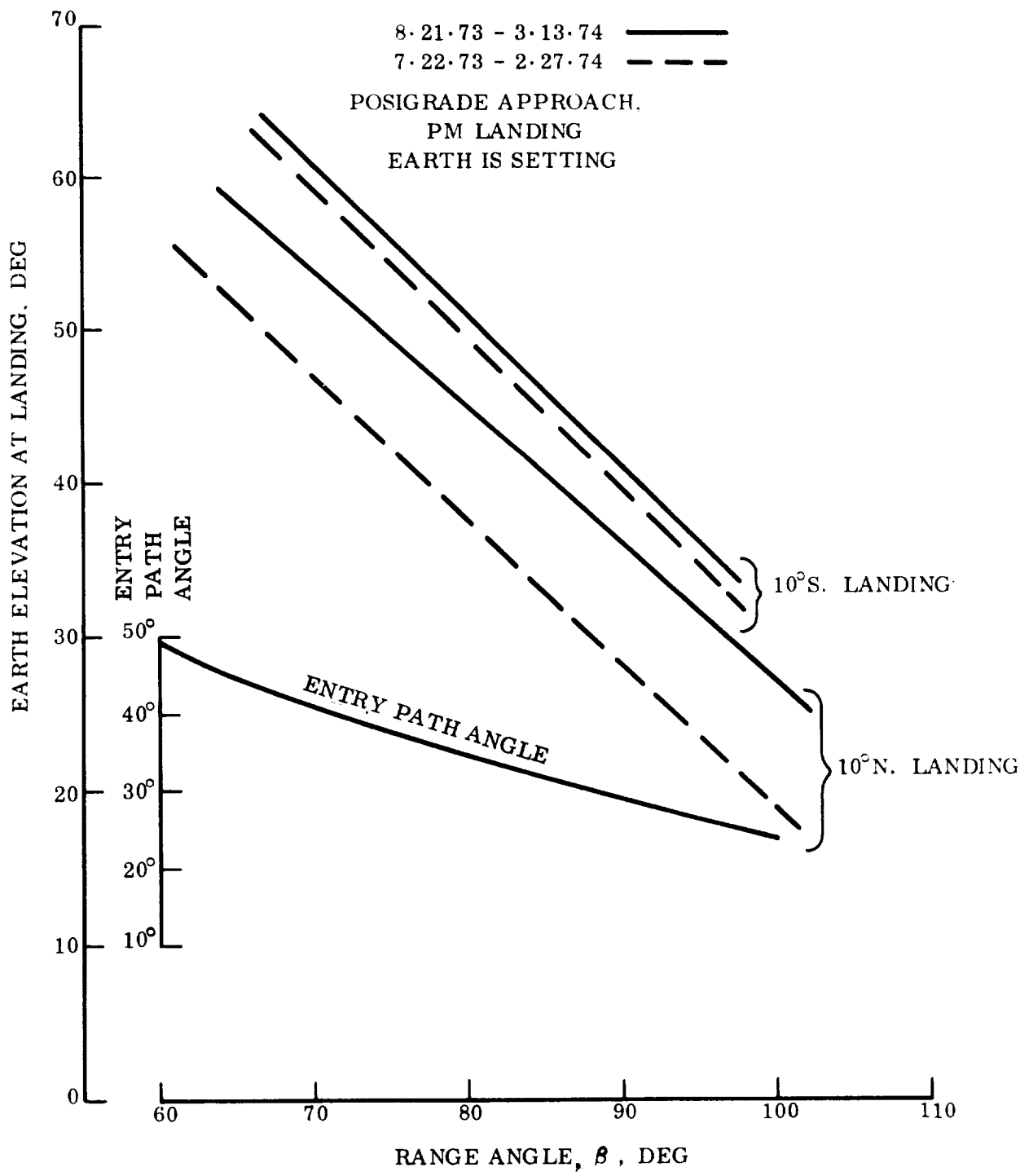

Figure 2.1-6. Earth Visibility at Landing

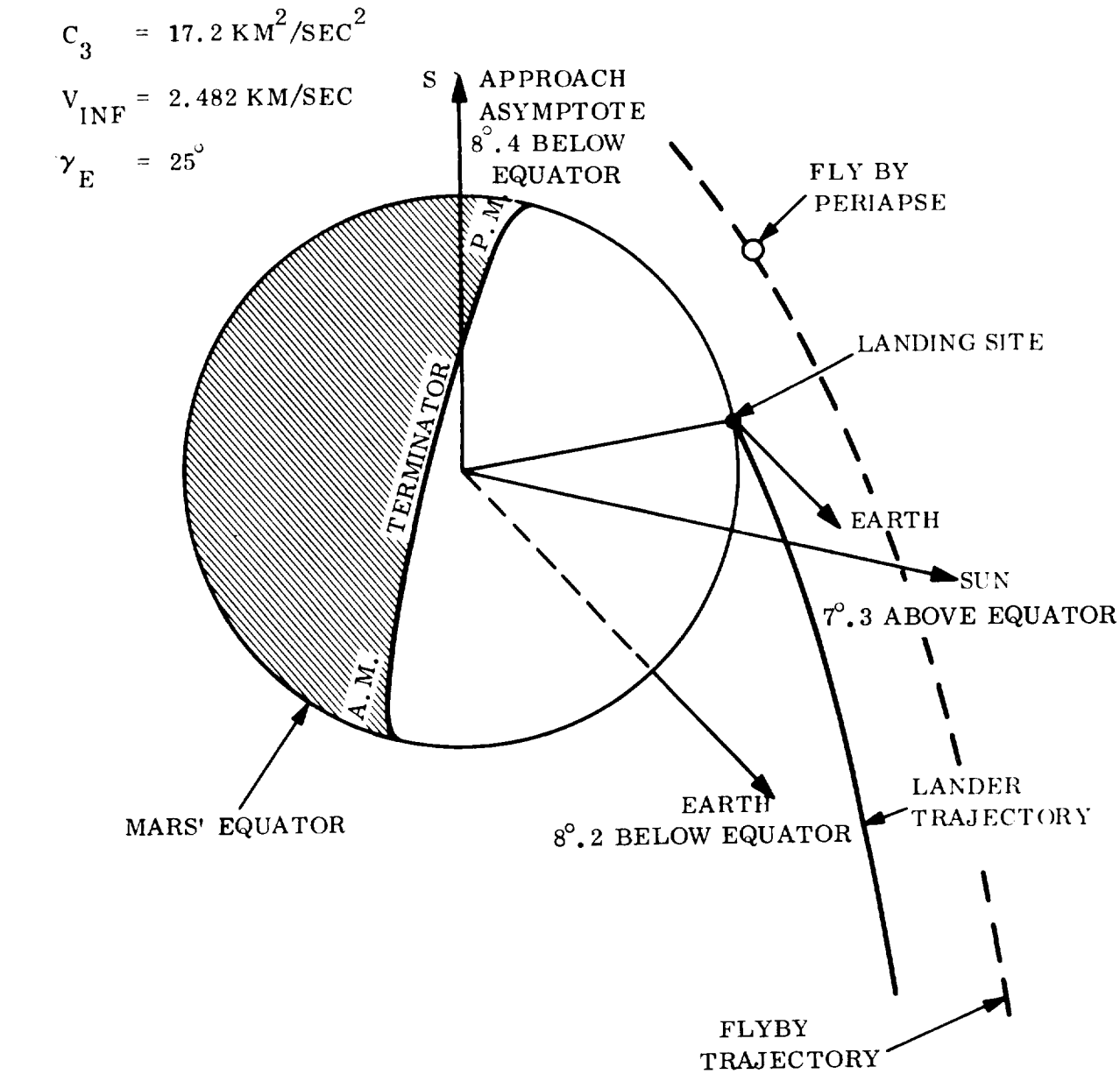

Figure 2.1-7. Earth Visibility at Landing, Late Arrival

In summary it must therefore be stated that the geometrical condition for a direct to Earth communication link can be obtained but only by pushing all the mission constraints. Even then, the existance of a direct link is only marginal, when entry path angle and downrange dispersions are considered.

2.2 ENTRY COMMUNICATIONS

In mission modes where a flyby Support Module is considered, the use of a relay link for the return of entry data is the preferred approach. However, for the mission mode in which the Support Module has no relay capability, entry data must either be transmitted directly to Earth during entry, or stored for transmission after landing. The latter approach is unacceptable as the prime means for obtaining entry data, although it may be used as a backup to real time transmission. Therefore, a direct link during entry must be provided. In this section of the report, a concept for a direct link that will support a data rate of 200 bps during the later portions of entry is described. Although this rate is so low as to be only marginally acceptable, the communication concept appears to be practical and it is; therefore, presented as a basis for sizing the Capsule to allow an evaluation of the mission mode to be made. Following the description of the direct entry link performance, the performance achievable with a relay link to the flyby Support Modules is presented.

2.2.1 DIRECT ENTRY LINK

During the entry period during which communication to Earth is required, the Capsule attitude relative to the line of sight from the Capsule to Earth changes through nearly 90° as the Capsule pitches down from a low angle relative to the local horizontal at high altitudes, to a nearly vertical descent near impact. Furthermore, the Capsule roll attitude with respect to the direction to Earth is not controlled in position (only in rate). As will be discussed, it turns out that essentially a full hemisphere must be covered by the Capsule antenna if continuous communication is to be attempted. Thus, the antenna will provide only a very low gain unless means are used to point one or more antennas to Earth during the entry period, which lasts a maximum of about 10 min. It is considered impractical to provide such a pointing system and the recommended approach uses four fixed broad beam antennas, each driven by independent 100 watt transmitters capable of supporting a data rate of 55 bps each. Because of the relatively large uncertainty in the frequency of the signal received at Earth caused by Doppler shift and transmitter frequency drift, pre-detection recording is required in order to eliminate the need for real time acquisition by the ground receivers. Multiple frequency shift keying of the transmitters is employed.

The ability of a system to achieve a high data rate is limited by constraints on transmitter power, antenna element gain, and the achievable modulation and detection efficiency. Following is a discussion of the nature of these constraints.

Maximum transmitter power is limited by breakdown of the antenna in the Martian atmosphere. Based on previous experimental work, it is assumed that with reasonable care in antenna design, 100 watts of transmitted power is feasible.

Maximum gain of an antenna element fixed to the vehicle is limited by the view angle variations and uncertainty between the Capsule roll axis and Earth; i.e., the antenna pattern must cover the range of angles off the roll axis that could be encountered. Symmetry about the roll axis is required because there is no preferred Capsule roll angle. The minimum angle off the roll axis occurs at parachute deployment when the Capsule velocity vector is pointed very nearly directly away from Earth. The maximum angle occurs near Capsule impact when the vehicle is descending vertically with the addition of some swing on the parachute.

For this analysis, parachute swing is assumed to be a maximum of 20°. The angle between Capsule roll axis and Earth, assuming the roll axis aligned to the local vertical, is strictly a function of the Earth/landing site geometry at the time of impact. The ideal situation near impact is one in which the landing site local vertical points directly at Earth. The antenna beamwidth then needs only to be 40° to account for the ±20° parachute swing. In reality, however, launch considerations require that the landing site be a considerable angle from the sub-Earth point. For a 10°N landing site (the preferred latitude) this angle has been found to be a minimum of 54° and a maximum of 79° (corresponding to entry angles of 30° and 20° and arrival dates of 13 March 1974 and 27 February 1974, respectively). For the best of these two cases, the maximum angle off the roll axis would be 74° (54° + 20° parachute swing) and in the worst case the maximum angle would be 99°. The latter case not only implies the requirement for an antenna pattern giving greater than hemispherical coverage, but also indicates that the Earth can be as low as 11° above the horizon at Capsule impact. There is a reasonable probability; therefore, that the line-of-sight to Earth would be blocked even if a 10°S landing site is accepted. In this case the angles from local vertical to Earth are 47° minimum and 68° maximum instead of the 54° and 79° cited for the 10°N landing site. Including ±20° of parachute swing the pattern coverage off the Capsule roll axis is now 88° worst case and the minimum Earth elevation at impact is 22°. The latter number is a significant improvement in probability of line-of-sight to Earth at impact, and the 88° implies that hemispherical antenna coverage will suffice. Even this, however, is not a simple requirement because it requires that the antenna element have an unobstructed view over a hemisphere at the rear of the Capsule. If multiple elements are to be used, some extent of mutual blockage is unavoidable. For a single element, hemispherical coverage with a minimum of 0 dB gain appears to be a realistic goal.

Doppler characteristics of the signal play an important part in the efficiency of a modulation and detection technique. To limit the problem to some extent, it is assumed that reception will be attempted only after the parachute is deployed. Some indication of the problem can be obtained by the following. At the time that the parachute opens (Mach 2), the Capsule velocity vector is pointing in the general direction away from earth. The Doppler frequency is in the order of 3500 Hz. At impact the velocity is more nearly perpendicular to the Earth line-of-sight and the velocity is of the order of 100 fps, resulting in very little Doppler. Essentially, the full range of about 3500 Hz will be observed from parachute deployment to impact.

At Earth, the time of parachute deployment cannot be predicted better than within a few minutes. In addition, the Doppler profile is not completely predictable since it depends on parameters such as entry angle and atmosphere, which are known only within limits. This uncertainty of transmission period and Doppler profile make real-time detection impossible with the relatively low received signal level expected. Regardless of the modulation and detection technique assumed, predetection recording of a wide bandwidth and a subsequent signal search procedure are required. The modulation and detection technique should be selected to minimize the required E/N_0 under these conditions.

2.2.1.1 Baseline System

There are several approaches to the design of a direct link system. To obtain a baseline for further discussion, a transmission system consisting of a single transmitter and antenna element will first be considered.

It is assumed that 100 watts can be transmitted without breakdown and that hemispherical antenna coverage can be achieved with minimum gain of 0.0 dB including all pointing and polarization losses. Furthermore, it is assumed that the DSIF 210 ft dish can be used in the listen-only mode and the elevation of the dish during reception can be greater than 20°. Under these conditions the receiving system parameters to be expected are 28°K system temperature and 61 dB gain, worst case. Mars-Earth range is assumed to be 225×10^6 kilometers, corresponding to an arrival date of 13 March 1974. The link calculations of table 2.2-1 then indicate that the S/N_0 available is 26.7 dB worst case. Since data rate is equal to S/N_0 divided by the overall E/N_0 required per bit, the question now becomes: what is the minimum achievable E/N_0 considering the uncertainty in signal dynamics due to doppler discussed earlier?

A direct answer is unavailable; however, some indication can be obtained by noting that with no Doppler and using PSK/PM, the achievable data rate is 50 bps uncoded and 90 bps coded (32, 6 biorthogonal) assuming a 12 Hz double-sided carrier loop bandwidth (ref. 2.2-1,). This indicates E/N_0 values of 9.7 and 7.2 dB, respectively, including carrier requirements. About half the total transmitted power in each case is in the carrier. The resulting carrier-to-noise-density ratio (C/N_0) of about 23 dB gives, for instance, 6 dB SNR in a 50 Hz bandwidth which should be adequate to at least find the signal in the recorded data and to be able to track out the Doppler to some extent. Of course, the ability to obtain a carrier phase lock which is adequate for efficient sideband demodulation is dependent on how much frequency offset and phase jitter remain after the major portion of the Doppler has been extracted. A guess at this point is that at the S/N_0 value being considered, a coherent coded link could be established with an overall E/N_0 of the order of 10 dB.

A prediction that appears less risky is that the Doppler can be tracked out to within a few Hz, even with a reduction of several dB in constant-frequency carrier power. This suggests the potential application of noncoherent detection. Although a straight FSK link with noncoherent detection would be applicable, greater efficiency would be

TABLE 2.2-1. LINK CALCULATIONS (ALL VALUES WORST CASE)

Transmitted Power (100 W worst case)	50.0
Transmitting Circuit Loss	- 1.4
Transmitting Antenna Gain	0.0*
Space Loss ($R = 225 \times 10^6$ KM)	-266.7
Receiving Antenna Gain (> 20° El.)	61.0
Receiving Antenna Pointing Loss	- 0.3
Receiving Circuit Loss	- 0.0
Total Received Power	-157.4
Receiver Noise Density ($T_S = 28°$, Non Diplexed)	-184.1
S/N_o Available	26.7

*Worst case over hemisphere including all pointing and polarization losses

obtained from a multiple frequency shift keyed (MFSK) link. For instance, an MFSK link with 32 different frequencies each defining 5 bits of information has a theoretical E/N_o requirement of about 4.4 dB (ref. 2.2-2) for a word error probability of 10^{-2} (bit error probability of 5×10^{-3} for independent bits). An assumed allocation for the factors leading to the overall expected E/N_o is as follows:

E/N_o (theoretical)	4.4 dB
Non Matched Filter (IF)	2.0 dB
Sync Power (25 percent)	1.3 dB
Word Sync Jitter Loss	0.5 dB
Predetection Recording Loss	1.0 dB
Overall E/N_o	9.2 dB

Here, every fourth pulse has been allocated to a single frequency for the purpose of Doppler determination and word sync. A functional block diagram of the detection process is shown in Fig. 2.2-1 where f(t) represents the entire transmitted signal, $f_d(5)$ represents the extracted Doppler information, and $f_n(t)$ is the signal at the nth frequency of the 32 transmitted frequencies ($f_1(t)$ is the sync signal). It is expected that many of the functions would be accomplished by computer.

Although this scheme might not be better than the coherent link and certainly is not expected to be the optimum scheme, its tolerance for Doppler uncertainty of several Hz gives some confidence that a scheme can be defined with an E/N_o of around 10 dB. An indication of Doppler tolerance can be obtained by assuming it equal to about one-fourth the bandwidth of an individual pulse. Since the data rate is 50 bps (R_b (dB) = $S/N_o - E/N_o = 26.7 - 9.2 = 17.5$ dB), then the pulse rate is 10 pulses/sec (5 bits/pulse) and the bandwidth of each pulse between the first spectral nulls is 10 Hz. The Doppler tolerance is then in the order of 5 Hz.

Following is a summary of the characteristics of the baseline system:

Data Rate	:	50 bps
Transmitted Power	:	100 watts minimum
Antenna Gain	:	0 dB minimum
Prime Power Required	:	≈300 watts (PA + exciter)
Weight	:	10 to 15 lb (PA + exciter + antenna and cable, excludes thermal control)

2.2.1.2 Alternate System

The baseline system does not come close to the minimal 200 bps data rate. However, this rate could be achieved by flying four of the baseline systems, fig. 2.2-2. This would provide a total data rate of 200 bps with the possibility of some loss of data due to line-of-sight interference between antennas when the Earth direction is close to 90° off the Capsule roll axis. Four links have been considered to be the maximum number that could be tolerated in a weight basis (40 to 60 lb of RF equipment); therefore, 200 bps is about all that can be expected from this basic approach.

To obtain a significant increase in data rate, it is necessary to increase antenna gain (assuming that the 100 watts transmitted per antenna element cannot be increased appreciably). This, in turn, implies a requirement for beam steering. Considerable

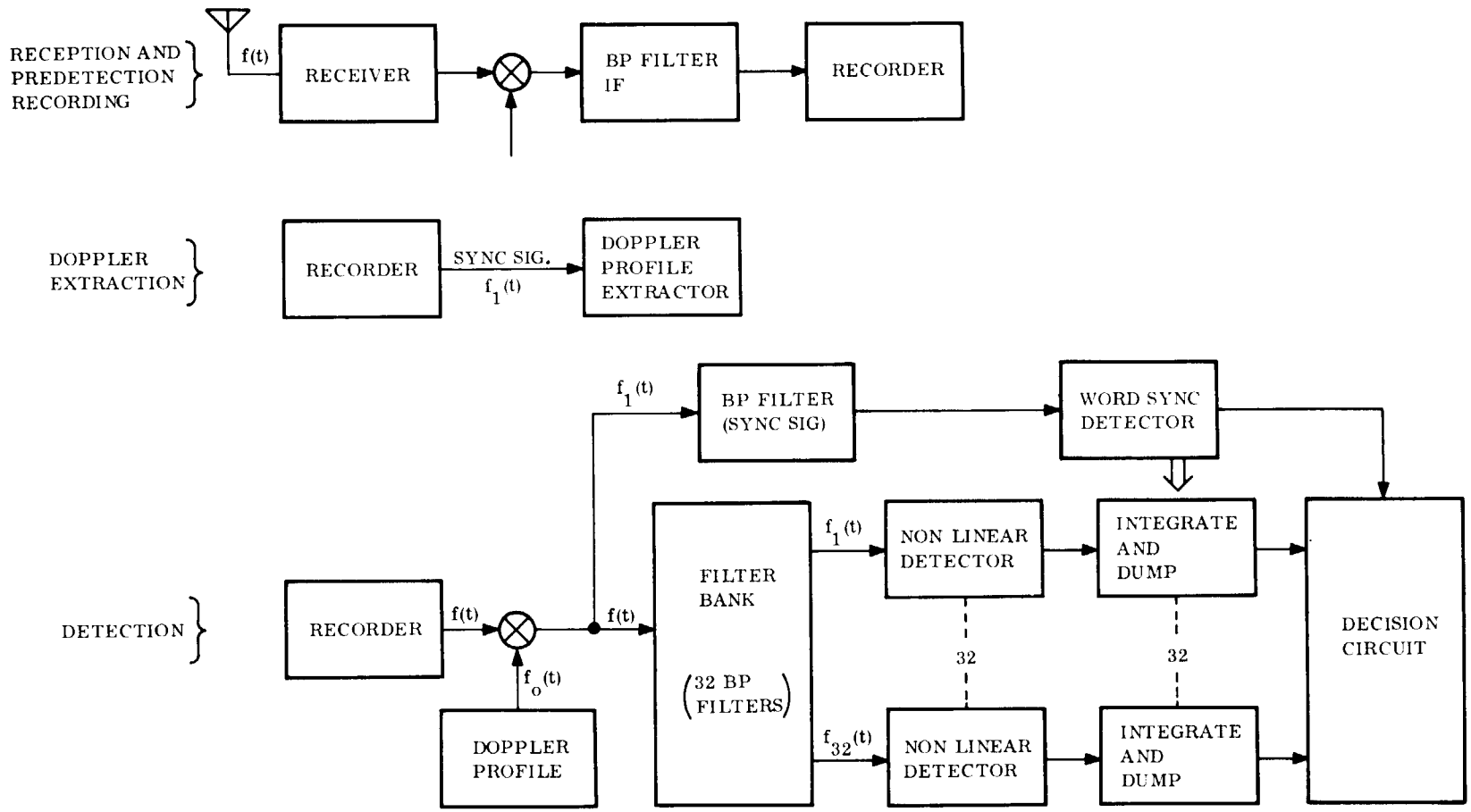

Figure 2.2-1. Data Detection Functional Concept

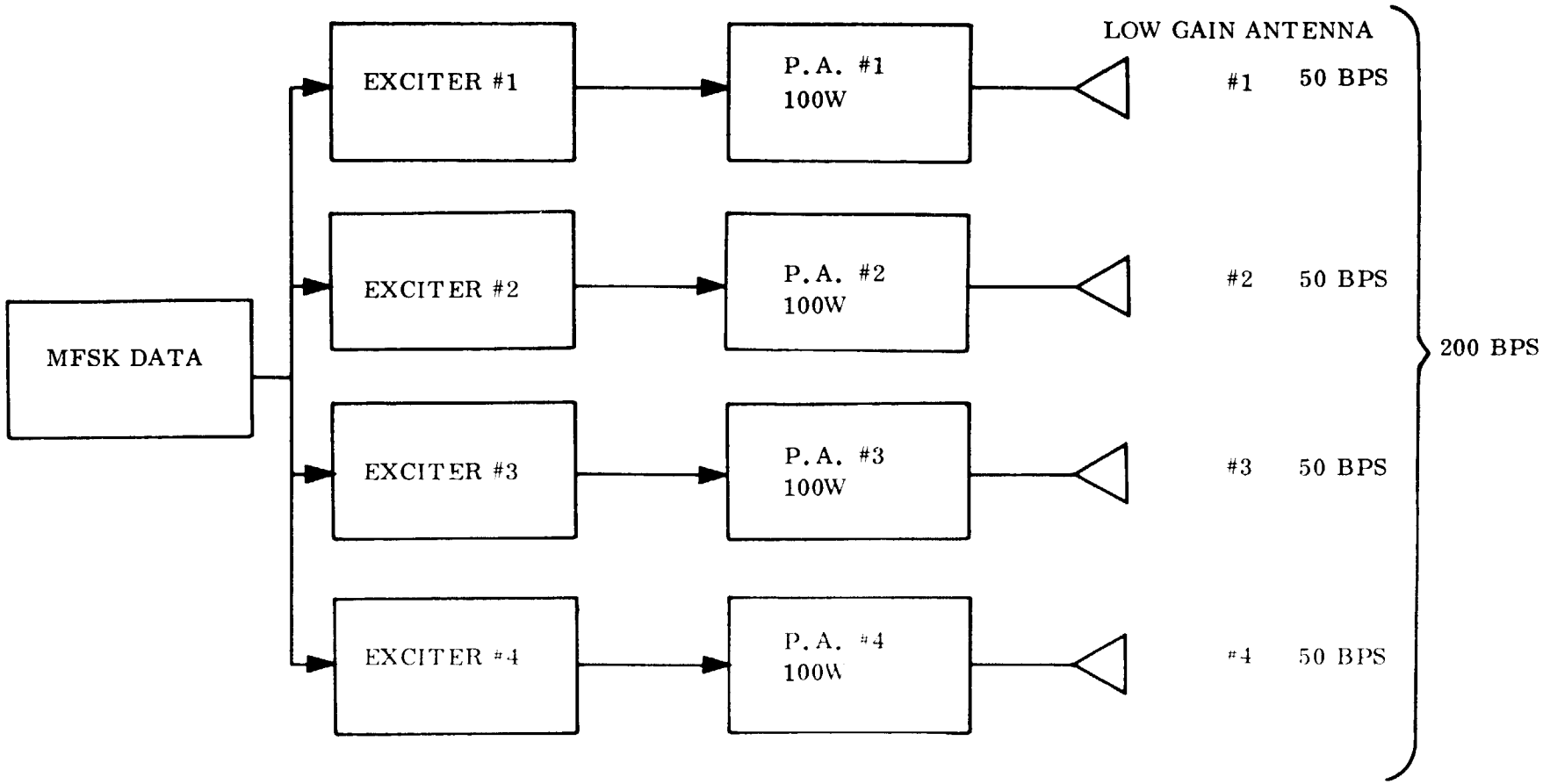

Figure 2.2-2. Multiple Systems with Pre-detection Recording

work is required in this area to achieve a complete design study. From a preliminary investigation; however, the indications are that, if feasible, beam-steering techniques are complex, risky (from both a reliability and an operational viewpoint), and/or heavy; usually all three.

2.2.2 RELAY LINK

In contrast to the entry direct link, an entry relay link to the Support Module, fig. 2.2-3, can be designed to provide a data rate of 1000 bps or more. Also, if the arrival of the Support Module at the planet is delayed relative to the Capsule arrival, the relay link may be used for the transmission of imagery data from the planet surface. The design studies reported in Volume I, Section 5.2, show that the relay link can support an 1100 bps data rate during entry, and transmitting at a rate of 70 kbps after landing, can return a min of 2.8×10^7 bits of landed data to the Support Module. For those missions which require that the Support Module be sterilized, the feasibility of relaying landed imagery is contingent on the development of a sterilizable tape recorder.

2.2.3 REFERENCES

2.2-1 Mars Hard Lander Capsule Study, Capsule Parametric Study, Vol. III, Book 2, NASA CR 66678-4, 31 July 1968.

2.2-2 Lindsey, W.C., "Coded Noncoherent communications, "IEEE Transactions on Space Electronics and Telemetry, March, 1965.

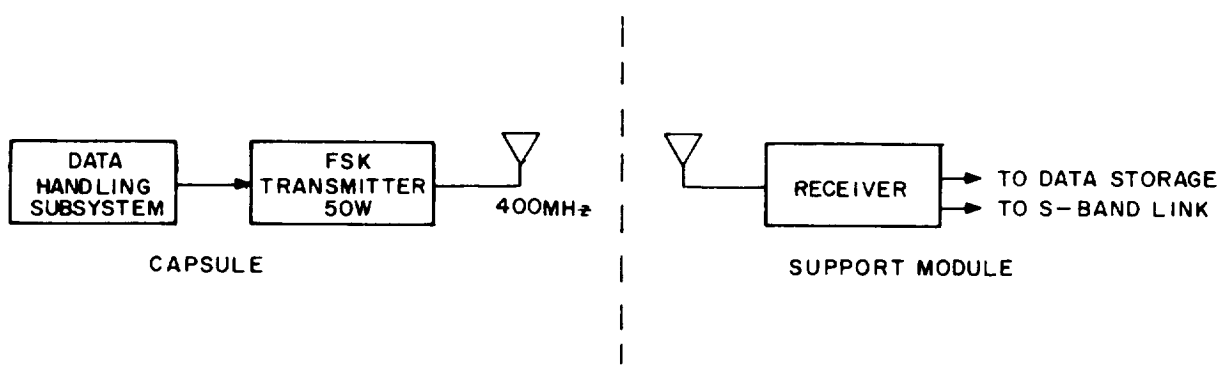

Figure 2.2-3. Entry Relay Link

2.3 LANDED IMAGERY

For a mission mode which does not include a Support Module with relay capability, surface imagery data must be transmitted directly to Earth. In order to transmit the minimum required imagery data load of 10^7 bits within the minimum mission life of three days, the data rate, assuming an 8 hr daily transmission period, must be at least 100 bps. Fig. 2.3-1 shows that using a 20 watt power amplifier, an antenna gain of 10 dB is required. Such an antenna would have a beamwidth of 50°. Allowing $\pm 32^o$ uncertainty in the Lander attitude on the surface due to slopes and crush-up of the impact attenuator, and taking into account uncertainties in the landing site location, the minimum acceptable beamwidth of a body-fixed antenna is about 70°. Therefore, a means of pointing the 50° beamwidth antenna is required. As long as orientation of the antenna is required, even narrower beamwidth antennas can be incorporated without significantly increasing the antenna system complexity, and thereby the requirements on the power subsystem can be reduced. It has been found possible to install a 24 dB gain antenna in the Lander. Such an antenna would have a beamwidth of 10°. Allowing a maximum pointing error of 5°, the minimum achieved gain would be 21 dB, which as fig. 2.3-1 shows, allows a data rate of 2000 bps to be used, reducing the required daily transmission time to less than 0.5 hr. The resulting saving in battery energy requirements is more than 600 watt-hr/day.

Perhaps the simplest antenna pointing scheme is to erect the antenna axis to the local vertical. Fig. 2.3-2 shows the beamwidth for a vertically oriented antenna that enables the greatest amount of data to be returned, assuming that transmission takes place at a constant data rate for the entire period that the line of sight to Earth lies within the antenna 3 dB beamwidth. The 24 dB antenna with its 10° beamwidth is near the optimum antenna for an early March arrival date at 10° south landing sites. This antenna is useful throughout the month of March, and could be used effectively until early in April when the declination of the Earth increases above -5°. For operation at later dates, the antenna would have to be pointed away from the local vertical toward the Earth, or a broader beam antenna would be required.

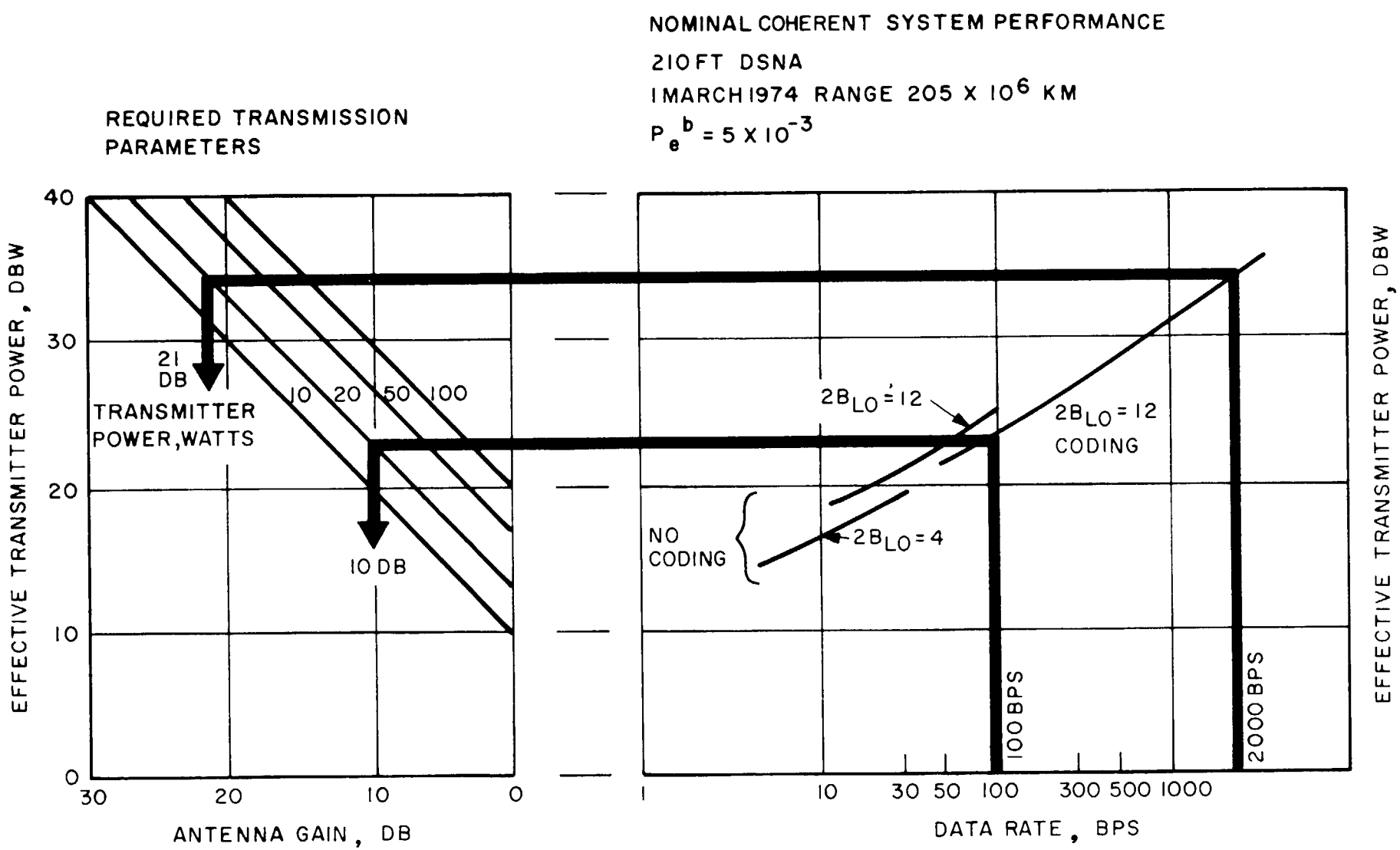

Figure 2.3-1. Direct Link Design Parameters

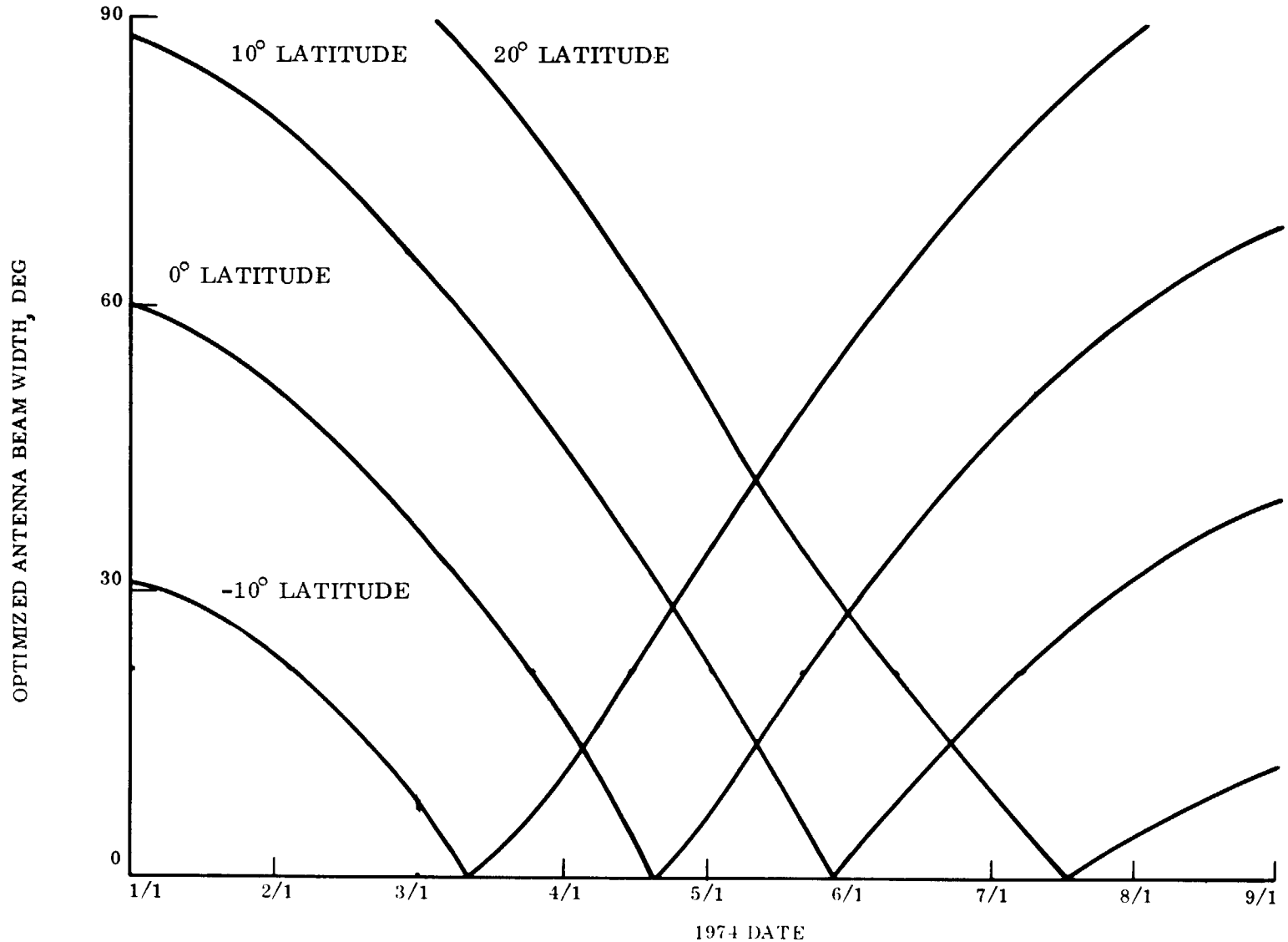

Figure 2.3-2. Optimum Beamwidth of Vertically Oriented Antennas

2.4 MISSION PROFILE

2.4.1 TRULY AUTONOMOUS

A sequence of events from launch to mission completion is shown by table 2.4-1. This describes a mission as defined for an Autonomous Capsule. The Support Module performs propulsions and support functions for the entry vehicle during interplanetary cruise. This module separates from the entry vehicle prior to entry and serves no further function. All data is transmitted by a direct link system in the Lander. Fig. 2.4-1 is a graphical presentation of the first 48 hr of landed operations.

The sterilization canister forward section is separated while the Booster Transtage and attached Capsule are still in Earth parking orbit. The Transtage/Capsule next orients and injects into a Mars flyby trajectory. The Spacecraft then separates from the Transtage and orients to an Earth pointing attitude and spins up for stabilization. Corrections are made as required to maintain the pointing attitude and spinning throughout the 215 day interplanetray cruise. Midcourse corrections are also performed, to assure that the Capsule is on an impacting trajectory.

The entry vehicle separates from the Support Module 24 hr prior to entry. The Support Module serves no further service. The Capsule continues on the impact trajectory and continues spinning to retain stabilization.

Entry data is collected and transmitted real time to Earth via the direct link telemetry system in the Lander Capsule. Deceleration is accomplished by parachute whose deployment is actuated by a Mach 2_x sensor.

After the Lander package impacts and comes to rest, camera, T/M, and meteorological booms are deployed. Engineering data and meteorology measurements are performed immediately thereafter, and transmitted direct to Earth by the S-band telemetry system. Meteorology readings are continued at 20 min intervals and data stored. Landed science (life detection, soil composition, etc.) measurements commence 18 hr after impact with data stored. Initial science experiments are completed in 1 hr but subsequent life detection growth readings are performed every 20 min with storage data.

Twenty hr after impact, the S-band direct link telemetry and imaging systems are turned on for a 1 hr period. Stored data and real time imaging data are transmitted directly to Earth.

Meteorological and life detection reading and storage continue for the next 24.6 hr. The S-band telemetry and imaging systems are then turned on for a 1 hr period during which all stored data and additional by real time imaging is transmitted directly to Earth. Following shut down of the T/M system, the solar panel array is deployed. Twenty minute meteorological readings continue for an additional 24.62 hr period. The data from which is again transmitted directly to Earth during a 30 min S-band T/M period.

TABLE 2.4-1. TRULY AUTONOMOUS MISSION SEQUENCE OF EVENTS

A. Launch to Impact		Time
1. Launch		T_L
2. Achieve Parking Orbit		T_L +12 min
3. Separate Biobarrier Canister Forward Section		T_L +30 min
4. Orient Booster Transtage for Interplanetary Trajectory		T_L +40 min
5. Inject into Cruise Trajectory		T_L +50 min
6. Separate Autonomous Capsule from Canister and Transtage		T_L +60 min
7. Orient Capsule to Earth Pointing Attitude		T_L +60.1 min
8. Initiate Spin Stabilization to Capsule		T_L +60.2 min
9. First Mid Course Maneuver (If Req'd)	To Assure Impact Trajectory	T_L +30 days
10. Second Mid Course Maneuver (If Req'd)	To Assure Impact Trajectory	T_L +205 days
11. Mars Arrival		T_L +215 days
12. Start Capsule Final Diagnostic Checkout		T_O (Entry-48 hr)
13. Complete Diagnostic Checkout		T_O +120 min
14. Update Programmers Complete		T_O +17 hr
15. Final Impact Trajectory Correction Mode (If Req'd)		T_O +20 hr
16. Turn on Lander Power, T/M, and Diagnostic Data		T_1 (T_O +21 hr)
17. Capsule Orients to Entry Attitude and Diagnostic Data Transmitted to Earth for Verification		T_1 +5 min
18. Entry Vehicle Separates from Support Module (Spin Stabilization Continues)		T_2 (T_1 +3 hr)

19.	Support Module Deflected to a different Trajectory	T_2 +2 min
20.	Turn Entry Vehicle Power and T/M to Standby Mode (Diagnostic Data Transmitted Direct to Earth 1 min/ 1 hr during Pre-entry Cruise)	T_2 +4 min
21.	Turn on Entry Vehicle Power and Mass Spectrometer	T_3 (T_4 -15 min)
22.	Initiate De-spin	T_3 +.5 min
23.	Turn on T/M and Entry Science	T_3 +14 min
24.	Entry	T_4 (T_2 +24.0 hr)
25.	Mach 5 - Initiate Mass Spectrometer, Water Vapor, and Temperature Sensor Readings	T_4 +97 sec*
26.	Mach 2 - Deploy Parachute	T_4 +118 sec*
27.	Aeroshell Separation	T_4 +123 sec*
28.	Jettison Parachute	T_4 +216 sec*
29.	Impact-Force Sensed and Stored	T_5 (T_4 +1217 sec)*

* Entry Times Predicated on a Maximum Atmosphere

B. Landed Operations

1.	Lander Comes to Rest - Settlement and Up Direction Sensed	T_6 (T_5 +2 min)
2.	Deploy Booms and Antennas	T_6 +0.1 min
3.	Transmit Diagnostic and Meteorology Data Direct to Earth	T_6 +.5 min
4.	Turn Off T/M System	$_6$ +10.5 min
5.	Continue Meteorology Readings and Storage at 20 Min Intervals	—
6.	Initiate Surface Science Experiments with Data Storage	T_7 (T_5 +18 hr)
7.	Complete Initial Science Experiments	T_7 +1 hr

8.	Turn on Direct Link T/M and Imaging Systems	T_8 (T_5 +20 hr)
9.	Transmit Stored Data Direct to Earth Via S-band Antenna	T_8 +0.1 min
10.	Perform Meteorology and Imaging Experiments with Real-time Transmission Direct to Earth	T_8 +5 min
11.	Turn Off Imaging and T/M Systems	T_8 +1 hr
12.	Continue Meteorological and Life Detection Growth Measurements at 20 Min Intervals and Store Data	—
13.	Turn On S-band T/M and Imaging Systems	T_9 (T_8 +24.6 hr)
14.	Transmit Stored Data Direct to Earth	T_9 +1 sec
15.	Perform Meteorology and Imaging Experiments with Real Time Transmission Direct to Earth	T_9 +5 min
16.	Turn Off Imaging and T/M Systems	T_9 +1 hr
17.	Continue Meteorology and Life Detection Scattering Readings at 20 Min Intervals and Store Data	T_9 +1 hr
18.	Deploy Solar Array	T_9 +1.5 hr
19.	Turn On T/M System	T_{10} (T_9 +24.6 hr)
20.	Transmit Stored Data to Earth	T_{10} +0.1 min
21.	Turn Off T/M System	T_{10} +.5 hr
22.	Continue Meteorological Measurement and Storage at 1 Hr Intervals with Daily Transmission to Earth. Command Receiver Permits Variations in Sequence as Desired by Earth Including Imaging at an Equivalent Capability of 1/2 Hr Transmission Per Day.	—

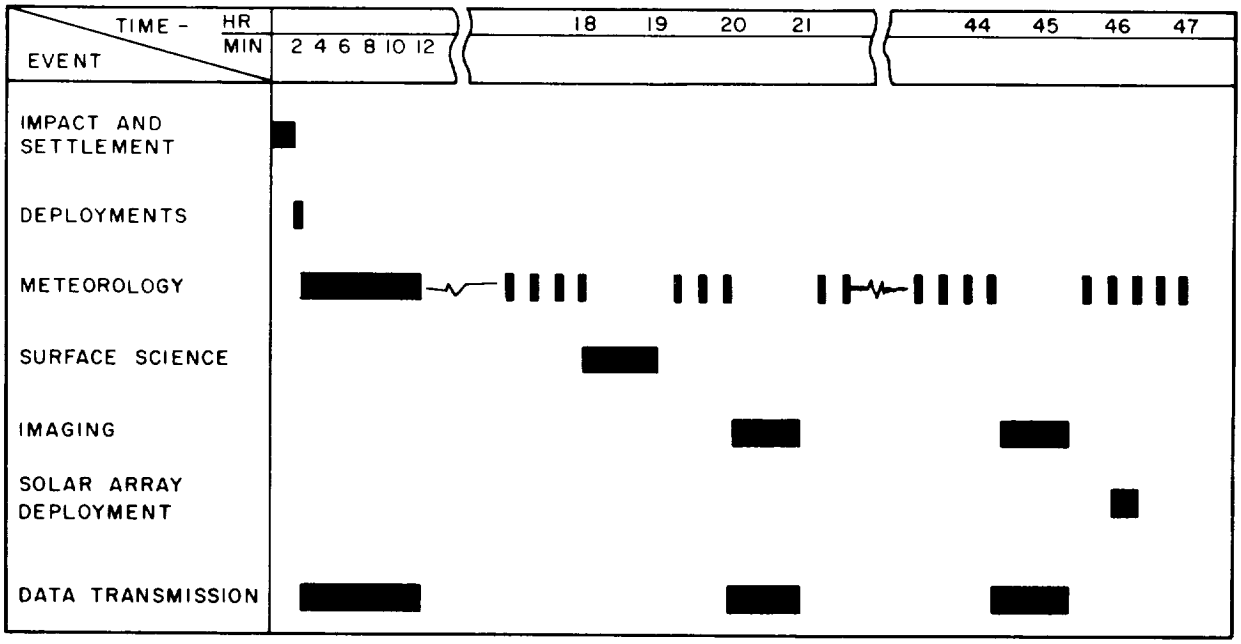

Figure 2.4-1. Autonomous Flyby Landed Sequence of Events

The Capsule then switches to an extended life mode which is powered by solar panel recharging of the battery. Meteorological measurements are performed at 1 hr intervals with daily S-band transmissions to Earth. Lander includes a direct link command receiving system which permits Earth directed variations in the sequence including imagery equivalent capabilities of 1/2 hr transmission per day.

2.4.2 DIRECT ENTRY WITH DEFLECTED RELAY SUPPORT MODULE

A sequence of events from launch to mission completion is shown by table 2.4-2. This describes a mission as defined for a flyby Autonomous Capsule which incorporates an integrated Support Module. This Support Module performs propulsions and support functions for the landed Capsule during interplanetary cruise and serves as a relay telementry link after Capsule impact. Fig. 2.4-2 a graphical presentation of the first 46 hr of landed operations.

The sterilization canister forward section is separated while the Booster Transtage and attached Capsule are still in Earth parking orbit. The Transtage/Capsule next orients and injects into a Mars flyby trajectory. The Spacecraft then separates from the Transtage and orients to an Earth pointing attitude and spins up for stabilization. Corrections are made as required to maintain the pointing attitude and spinning throughout the 215 day interplanetary cruise. Midcourse corrections are also performed to assure that the Capsule is an impacting trajectory.

The Entry Vehicle separates from the Support Module 24 hr prior to entry. The Support Module then deflects to a flyby trajectory and orients to serve as a relay telemetry link for the entry vehicle. The latter continues on the impact trajectory and continues spinning to retain stabilization.

Entry science data is collected and (a) transmitted real time to the flyby Support Module and (b) stored with a 70 sec delay and transmitted interleaved with the real time data to the Support Module which relays the data to Earth. Deceleration is accomplished by parachute, whose deployment is actuated by a Mach 2 sensor.

After impact and the Lander package comes to rest, camera, T/M, and meteorological booms are deployed. Surface imaging and meteorology measurements are performed immediately thereafter and transmitted real time by UHF telemetry to the flyby Support Module for relay to Earth. Twenty min later imaging and UHF telemetry is discontinued. Meteorology readings are continued at 20 min intervals and data stored. Landed science (life detection, soil composition, etc.) measurements commence 18 hr after impact with data stored. Science activities are completed in 1 hr but subsequent life detection growth readings are performed every 20 min with storage of data.

Twenty hr after impact, the S-band direct link telemetry and imaging systems are turned on for a 1 hr period. Stored data and additional real time imaging data are transmitted directly to Earth.

TABLE 2.4-2. D/E LANDER WITH DEFLECTED RELAY SUPPORT MODULE, MISSION SEQUENCE OF EVENTS

A. Launch to Impact	Time
1. Launch	T_L
2. Achieve Parking Orbit	T_L +12 min
3. Separate Biobarrier Canister Forward Section	T_L +30 min
4. Orient Booster Transtage for Interplanetary Trajectory	T_L +40 min
5. Inject into Cruise Trajectory	T_L +50 min
6. Separate Autonomous Capsule from Canister and Transtage	T_L +60 min
7. Orient Capsule to Earth Pointing Attitude	T_L +60.1 min

8.	Initiate Spin Stabilization to Capsule		T_L +60.2 min
9.	First Midcourse Maneuver (If Req'd)	To Assure Impact Trajectory	T_L +30 days
10.	Second Midcourse Maneuver (If Req'd)		T_L +205 days
11.	Mars Arrival		T_L + 215 days
12.	Start Capsule Final Diagnostic Checkout		T_O (Entry-48 hr)
13.	Complete Diagnostic Checkout		T_O +120 min
14.	Update Computer and Sequencer		T_O +17 hr
15.	Final Impact Trajectory Correction Made (If Req'd)		T_O +20 hr
16.	Turn on Lander Power and Diagnostic Data		T_1 (T_O +21 hr)
17.	Capsule Orients to Entry Attitude		T_1 +5 min
18.	Entry Vehicle Separates from Support Module (Spin Stabilization Continues)		T_2 (T_1 +3 hr)
19.	Support Module Deflected to a Flyby Trajectory and Oriented to Serve as a Relay T/M Link		T_2 +2 min
20.	Turn Entry Vehicle Power and T/M to Standby Mode		T_2 +4 min
21.	Engineering Data T/M in 1000 bps Bursts for 60 Sec Every Hr Until Entry		--
22.	Turn on Entry Vehicle Power and Mass Spectrometer		T_3 (T_4 -15 min)
23.	Initiate Despin		T_3 +.5 min
24.	Turn on UHF T/M and Entry Science		T_3 +14 min
25.	Entry		T_4 (T_2 +24.0 hr)
26.	Mach 5 - Initiate Mass Spectrometer Water Vapor and Temperature Sensor Readings		T_4 +97 sec*
27.	Mach 2 - Deploy Parachute		T_4 +118 sec*

28. Aeroshell Separation	T_4 +128 sec*
29. Jettison Parachute	T_4 +1216 sec*
30. Impact-Force Sensed and Stored	T_5(T_4 +1217 sec)

*Entry Times Predicated on MAX Atmosphere

B. Landed Operations

1. Diagnostic and Stored Entry Data Transmitted to Flyby Support Module for Relay to Earth (Low Data Rate)	--
2. Lander Comes to Rest - Up Direction Sensed	T_6(T_5 +2 min)
3. Initiate Hatch Cover and Boom Deployments	T_6 +0.1 min
4. Perform Surface Meteorology Measurements and Transmit to Support Module for Relay to Earth (High Data Rate)	T_6 +0.5 min
5. Turn Off T/M Systems	T_6 +20 min
6. Repeat Meteorology Measurements at 20 Min Intervals and Store Data	--
7. Initiate Surface Science Experiments with Data Storage	T_7(T_5 +18 hr)
8. Complete Surface Science Experiments	T_7 +1 hr
9. Turn on Imaging and S-band Direct Link T/M Systems	T_8(T_5 +20 hr)
10. Transmit Stored Data Direct to Earth	T_8 +1 min
11. Repeat Surface Imaging and Meteorology Measurements with Data Transmitted Real Time to Earth by S-band Link	T_8 +5 min
12. Turn off T/M and Imaging Systems	T_8 +1 hr
13. Repeat Meteorology and Life Detection Scattering Reading at 20 Min Intervals with Data Storage	--
14. Turn on S-band T/M and Transmit Stored Data to Earth	T_9(T_8 +24.6 hr)

15.	Turn off T/M System	T_9 +15 min
16.	Deploy Solar Array	T_9 +20 min
17.	Continue Meteorology Measurements and Storage 3 Times/Hr	--
18.	Turn on S-band T/M and Transmit Stored Data to Earth	T_{10} (T_9 +24.62 hr)
19.	Turn off S-band T/M System	T_{10} +15 min
20.	Continue Meteorology Measurements and Storage at 1 Hr Intervals with Daily Transmission to Earth. Command Receiver permits Earth Directed Variations in Sequence including Imagery Equivalent Capabilities of 1/2 Hr Transmission Per Day	--

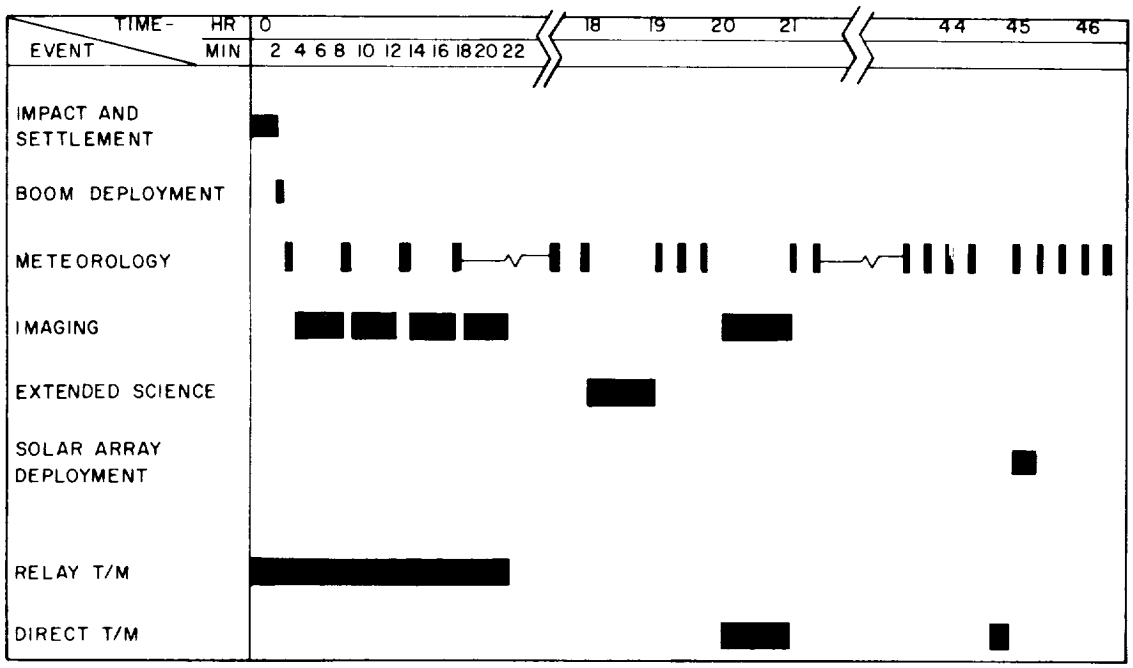

Figure 2.4-2. Autonomous Flyby Capsule Landed Sequence of Events

Meteorological and life detection reading and storage continue for the next 24.62 hr. The S-band telemetry link is then turned on for a 15 min period during which all stored data is transmitted directly to Earth. Following shut down on the T/M system, the solar panel array is deployed. Twenty min meteorological readings continue for an additional 24.62 hr period. The data from which is again transmitted directly to Earth during a 15 min S-band T/M period.

The Capsule then switches to an extended life mode which is powered by solar panel recharging of the battery. Meteorological measurements are performed at 1 hr intervals with daily S-band transmissions to Earth. Lander includes a direct link command receiving system which permits Earth directed variations in the sequence including imagery equivalent capabilities of 1/2 hr transmission per day.

3. SUPPORT MODULE DESIGN

3. SUPPORT MODULE DESIGN

3.1 REQUIREMENTS

The requirements on the Support Module for an Autonomous Capsule are dependent upon the mission mode of utilization of the Support Module. This is graphically illustrated in fig. 3.1-1.

The fundamental variable in the Support Module design is whether the Support Module is called upon to perform the function of relaying Capsule entry data back to Earth after separation from the Capsule. If not, the Support Module need only perform certain cruise functions and can be jettisoned from the Autonomous Capsule prior to entry to reduce entry weight.

If the Support Module is to perform the entry data relay function, the Flight Spacecraft may, after the first midcourse correction, be placed on either an impact trajectory (as in the direct link case) or a flyby trajectory (as in Mariner Mars '69). In the latter case, the Capsule deflects itself onto the proper entry corridor after separation from the Support Module, while the Support Module performs the relay function as it flies by the planet. In the former case, after separation from the Capsule, the Support Module may either deflect itself onto a flyby trajectory or perform a time-of-flight adjustment to retard its arrival at the planet relative to the entering Capsule.

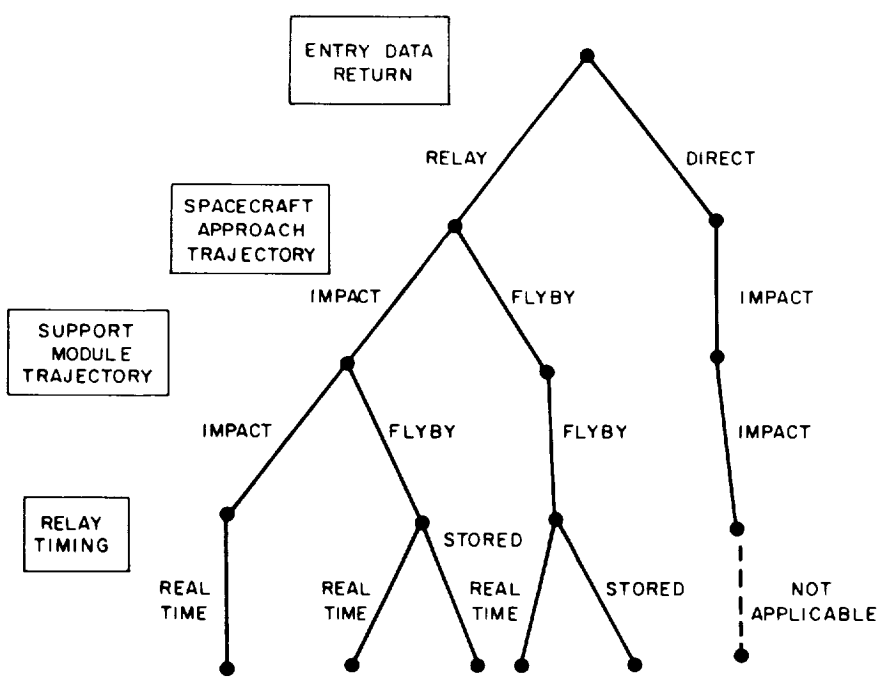

Figure 3.1-1. Support Module Mission Modes

In the flyby relay mode of operation, the transmission of the entry data from the Support Module to Earth may be either in real time or after storage of the entry data aboard the Support Module. In the alternative where the Support Module follows the Capsule on a trailing impact trajectory, it is unlikely that a time-of-flight adjustment of sufficient magnitude to permit the stored mode of operation would be performed.

It can be seen therefore, that the mission mode of operation determines which functions must be performed by the Support Module, and these functions in turn determine certain minimum subsystems which must be represented aboard the Support Module (see table 3.1-1).

If the Support Module is to serve as a relay station, it must both receive entry data from the Capsule and retransmit it to Earth. The former function suggests that a relay antenna and receiver must be contained aboard the Support Module; the latter requires at least the transmission portion of a radio subsystem. If the relay is other than in real time, data storage capability must be provided aboard the Support Module. To assure that the relay antenna points at the entering Capsule, and that the Earth antenna looks back toward Earth, dictates that the separated Support Module must possess some form of attitude control capability. Furthermore, some form of computer or sequencer capability is required to program the foregoing relay sequence. In addition, certain basic subsystems are required to support and integrate the relay Support Module, e.g., structure, cabling, temperature control, and power.

Secondly, certain functions are required by the Flight Spacecraft during cruise which are not required by the Capsule after separation. These subsystems should be incorporated aboard the Support Module to reduce the entry weight of the Capsule. Falling in this category are cruise separations and deployments, solar array power, and the necessary propulsion for midcourse corrections and (if applicable) deflection maneuvers or time-of-flight adjustments.

Finally, there are a few marginal functions which could be implemented aboard the Flight Capsule and shared by the Support Module during Spacecraft cruise. These functions would not, however, be available to the separated Support Module. Subsystems falling in this category are telemetry, command, and the reception portion of the radio subsystem. Excluding these functions from the separated Support Module results in some degradation of mission flexibility. For example, incorporating the radio (reception) and command subsystems fully within the Flight Capsule results in complete loss of capability for Earth control of the separated Support Module.

Figure 3.1-2 is a simplified block diagram of the major subsystems of the relay Support Module. Note that the marginal subsystems of radio (reception), command, and telemetry have been included in the block diagram. Generally, the penalty for their incorporation in terms of weight or power is small in comparison with the total weight or power of the Support Module.

A significant question is the type of attitude control to be employed aboard the Flight Spacecraft and the separated Support Module. The two promising alternatives are three-axis control (employed aboard the Mariner series Spacecraft) and spin stabilization (as employed aboard the Pioneer series Spacecraft). Both alternatives are discussed in more detail in the following Section.

TABLE 3.1-1. RELAY SUPPORT MODULE FUNCTIONS

BASIC FUNCTION	RESULTING SUBSYSTEM
MINIMUM RELAY FUNCTIONS	
RECEPTION OF ENTRY DATA	RELAY
STORAGE OF ENTRY DATA (EXCEPT REAL TIME RELAY)	DATA STORAGE
RETRANSMISSION TO EARTH	RADIO (TRANSMISSION)
CAPSULE AND EARTH ANTENNA POINTING	ATTITUDE CONTROL
SEQUENCING OF RELAY EVENTS	COMPUTER AND SEQUENCER
SUPPORT FOR THE ABOVE	POWER (STORED) CABLING STRUCTURE TEMPERATURE CONTROL
CRUISE FUNCTIONS NOT REQUIRED BY SEPARATED CAPSULE	
CRUISE SEPARATIONS AND DEPLOYMENTS	PYROTECHNIC MECHANICAL DEVICES
CRUISE POWER	POWER (REGENERATIVE)
MIDCOURSE AND TIME-OF-FLIGHT ADJUSTMENTS	PROPULSION
MARGINAL FUNCTIONS	
BACKUP RELAY SEQUENCING	RADIO (RECEPTION) COMMAND
STATUS MONITORING	TELEMETRY

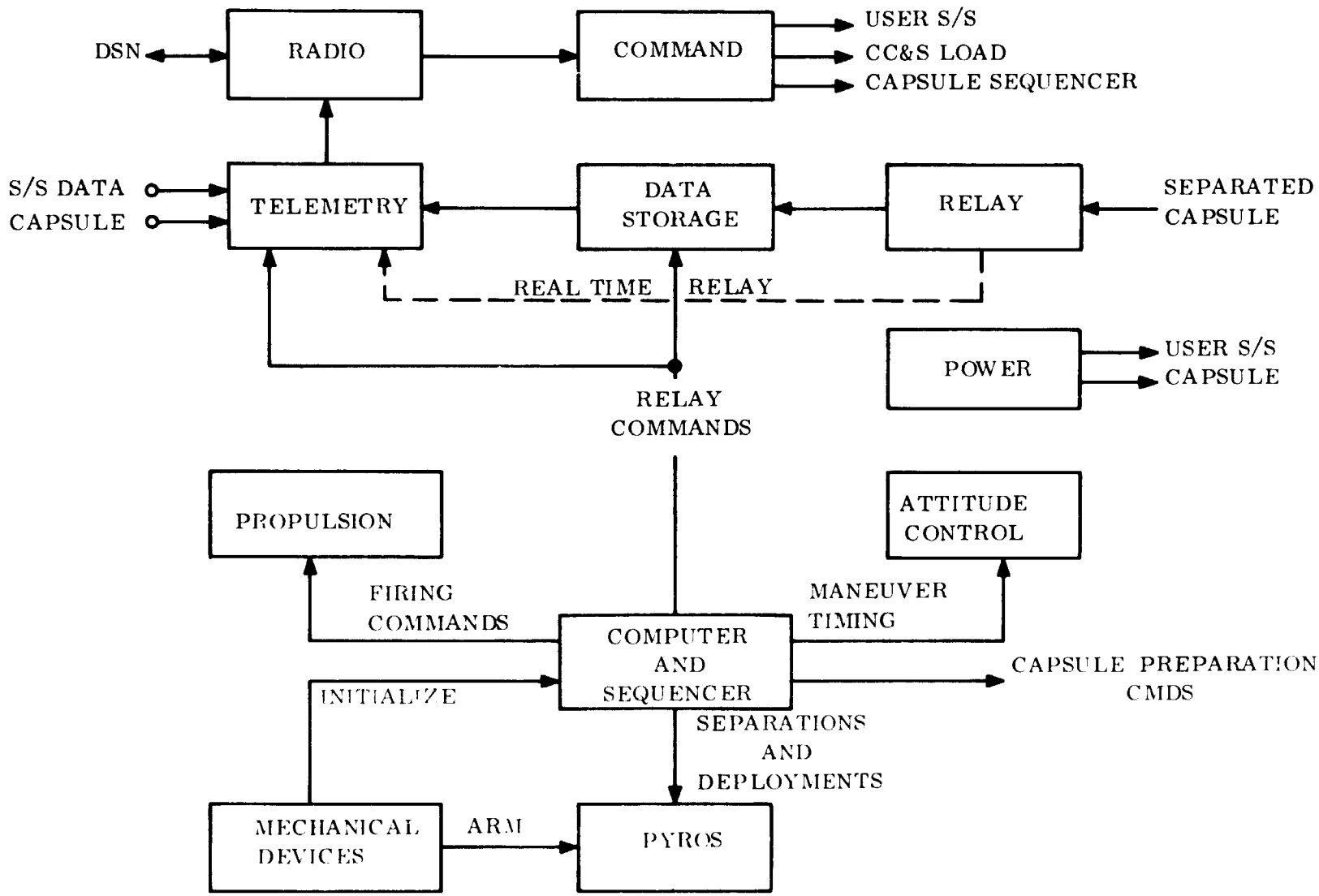

Figure 3.1-2. Simplified Block Diagram , Support Module

3.2 ATTITUDE CONTROL

3.2.1 ALTERNATIVES CONSIDERED

There are three broad requirements for the Support Module Attitude Control Subsystem. First, control of the Spacecraft attitude is required during the heliocentric cruise phase to provide a satisfactory communications link to the Earth and efficient solar power collection by the solar array. Second, reorientation of the Spacecraft attitude to any arbitrary spatial attitude is required to point the fixed midcourse thruster for trajectory corrections during the cruise phase. At planetary encounter, reorientation may be required to meet requirements for Capsule deflection attitude, relay communications, or Support Module time-of-flight adjustment. Finally, attitude hold during firing of the propulsion system is required to control the direction of velocity change to the Spacecraft or Support Module. These requirements are unaffected by the mission mode of operation of the Support Module.

To meet these requirements, both an active, three-axis attitude control and a semi-passive, spin stabilized attitude control system were considered. Both systems can meet all the mission requirements. The three-axis system measures and corrects attitude errors automatically by means of three closed control loops on board the Support Module. The spin system measures the attitude errors with on-board sensors and transmits the data to the ground over the telemetry link; ground data processing determines the attitude, and corrections are made by open-loop ground commands to the Spacecraft propulsion system.

The active, three-axis attitude control subsystem (A/C) acquires and stabilizes the Spacecraft to the Sun and the star Canopus. It then maintains the Spacecraft attitude relative to these references during the heliocentric cruise and Mars encounter phases. Upon receipt of commands from the Central Computer and Sequencer (CC&S), the subsystem maneuvers the Spacecraft by sequential rotations about its axes to any arbitrary spatial attitude, where velocity changes are performed by the propulsion system for trajectory correction or Support Module/Capsule time-of-flight separation. During engine firing, the A/C changes the thrust vector direction by controlling vanes in the engine exhaust to maintain vehicle attitude and stability. At a signal from the CC&S at the end of the maneuver sequence, the A/C reacquires the Sun and Canopus.

The spin stabilized attitude control subsystem establishes an inertial reference for Spacecraft attitude by spining up the vehicle just after separation from the Launch Vehicle so that its spin axis remains fixed in inertial space. Upon receipt of commands from the CC&S, the subsystem reorients the spin axis to any arbitrary spatial attitude. Reorientations are required for two reasons; (1) to keep the spin axis pointing to the Earth during heliocentric cruise, and (2) to align the midcourse correction thruster to the desired attitude prior to midcourse velocity corrections. During engine firing as well as during heliocentric cruise, attitude is maintained by the dynamic stability of

the spinning Spacecraft. Measurements of Spacecraft attitude are made on-board using the Sun and star field as reference, but corrections to attitude are made through the ground command link.

Estimates of power and weight for the two systems are given in table 3.2-1. The spin system is lighter, less complex, and takes less power. It is semi-passive; in fact, power can generally be turned off except when attitude measurement or correction is required. No gyros or error processing electronics are required. The spin system uses the midcourse thrusters to correct attitude errors rather than requiring a separate cold gas system. During engine firing, the spinning Spacecraft dynamics maintains the attitude so that a separate autopilot is not required. Spin techniques have been flight proven on Pioneer, Explorer and Comsat Spacecraft, but in general, new hardware must be developed for the Mars '73 mission.

On the other hand, the three-axis system is more automatic and does not require the telemetry and ground command links to determine correct attitude. Maneuver attitude verification is easier in this system. Although more complex itself, it significantly reduces complexity in other subsystems. For example, it provides a stable platform for communications antennas. Also, it if is Sun pointing, a minimum area of solar array is required. All techniques have been flight proven on the Mariner Spacecraft, and in general, the Mariner '69 hardware can be used with little or no change for the '73 mission.

3.2.2 THREE-AXIS CONTROL

A block diagram of the active, three-axis subsystem is shown in fig. 3.2-1.

During launch ascent, all parts of the subsystem are unpowered except the gyros. Following separation from the launch vehicle, power is applied to the rest of the subsystem. Sun sensors provide position signals in pitch and yaw and the gyros provide rate signals; the Canopus sensor output is not used. The initial rates are reduced to a low value and the subsystem operates to acquire the Sun. Then, a Sun gate operates to enable the Canopus sensor and to roll the vehicle about the Sunline until the sensor acquires and locks onto the star Canopus. The system discriminates against stars other than Canopus by brightness gate settings in the Canopus sensor acquisition logic. At the completion of Sun and Canopus acquisition, the gyros are turned off. The system switches to the cruise mode, in which the Sun sensors control pitch and yaw attitude and the Canopus sensor controls roll during the heliocentric cruise period. The gyros are off and control loop damping is obtained by the derived rate. The A/C is capable of automatic reacquisition of Sun and Canopus reference if either is lost.

When a velocity correction maneuver is commanded, the optical sensor outputs are not used. The gyros, operating in their position mode, establish an inertial reference. The gyros are torqued in sequence to produce a constant Spacecraft turning rate about

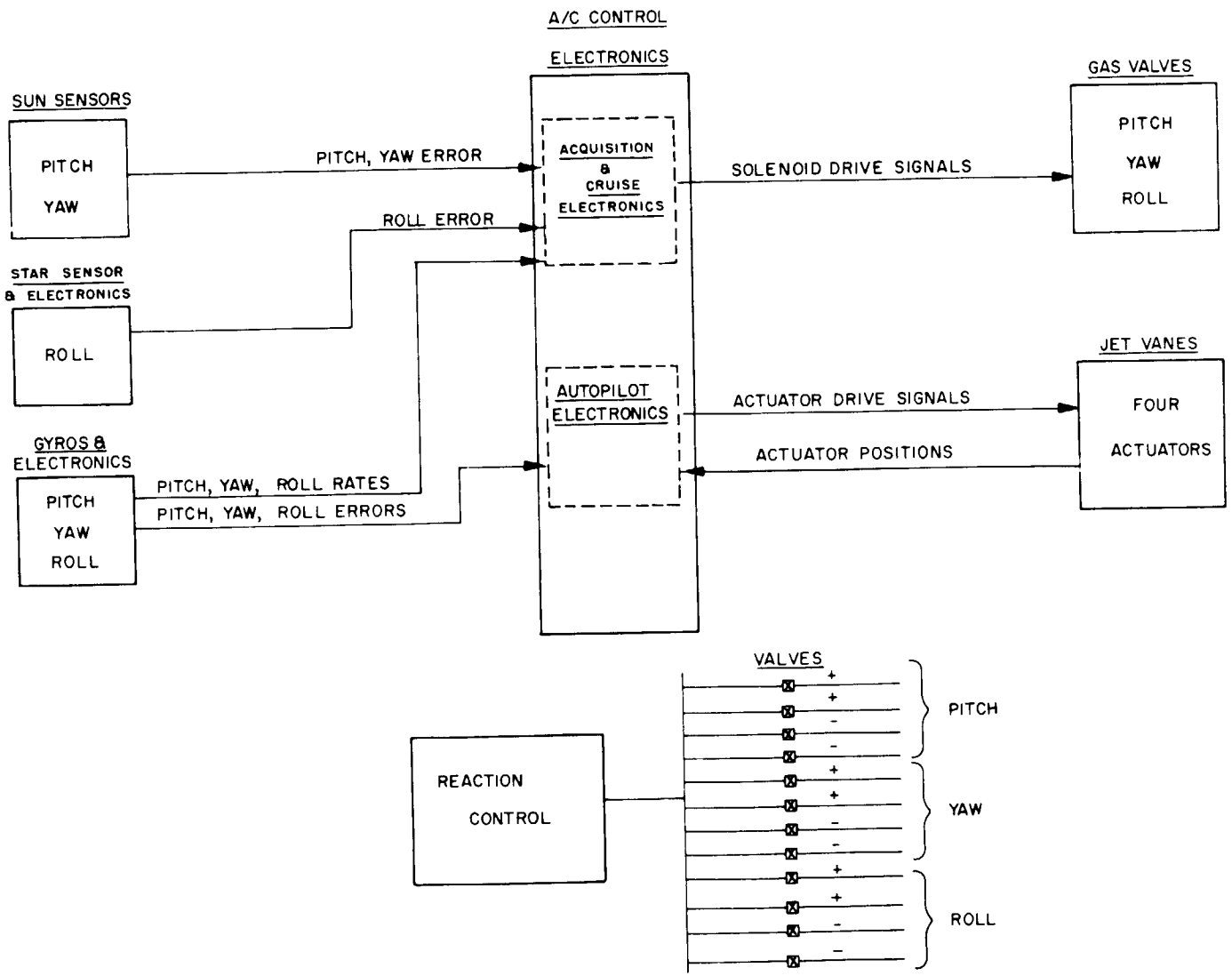

Figure 3.2-1. Three-Axis Subsystem Block Diagram

TABLE 3.2-1. COMPARISON OF ATTITUDE CONTROL ALTERNATIVES

	Three-axis	Spin Stabilized
Weight*	62 lb	15 lb
Power	6 watts - cruise 42 watts - maneuver	7 watts

*Three-axis weight includes a separate N_2 cold gas system. The propellant and tankage for the spin system are included in the propulsion system.

the desired axis. The time the gyros are torqued is controlled to yield the desired rotation. The attitude is then controlled by position signals from the three single-axis gyros. At the completion of the commanded turn sequence, the propulsion subsystem is initiated to supply the velocity correction. The autopilot maintains the inertial attitude of the Spacecraft by positioning jet vanes to control the thrust vector direction. The gyros generate position error signals, which are processed by the autopilot electronics, to drive the vane actuators. Upon completion of the velocity correction, the CC&S commands the subsystem to reacquire the Sun and Canopus and return the cruise mode.

The A/C can orient the Spacecraft to the Sun and Canopus from any initial orientation, and with initial rates as high as 3° about each aixs. Orientation to the Sun takes place in less than 30 min, followed by a Canopus search and lock on in less than 70 min additional time. During acquisition, the initial rates are quickly reduced, and they are limited to about 0.25° sec as the position error is reduced. Roll rate during Canopus search is about 0.1° sec.

During cruise operation, the limit cycle rate is about 0.2×10^{-3} sec. The deadband is about $\pm 0.25^\circ$ for each axis. The combined effects of all errors such as those due to deadband, alignment, null shifts and drifts, noise, and other random errors is less than 0.5° per axis (3σ).

During command turns, the turning rate is about 0.2° sec. The turn magnitude is controlled by allowing this rate to continue for a predetermined interval of time. The error between the resulting orientation and the commanded orientation depends on the magnitude of the specific turns involved and on the total time interval. Specifically, the cruise orientation error, gyro drift errors over the turning interval, gyro tate calibration, and capacitor leakage errors are the most significant. The resulting error for a 90° turn is 0.85 (3σ).

An error analysis of the autopilot has not been made, nor have requirements been established. The autopilot requires redesign due to changes in Spacecraft dynamics. Errors in attitude hold during autopilot operation (i.e., while engine is firing) are affected by Spacecraft center of mass offset and thrust misalignment. The allowable error is a function of the velocity increment to be given the Spacecraft. With a thrust misalignment angle of 0.3°, a CM angular offset uncertainty of 0.4° and an autopilot gain of 5°, the steady state autopilot error is about 0.55° (3σ). Transient errors have not been evaluated.

3.2.3 SPIN STABILIZED

A block diagram of the spin stabilized subsystem is shown in fig. 3.2-2.

During launch ascent, all parts of the A/C are unpowered. At Spacecraft separation from the Booster, power is applied, and the Spacecraft is spun up by the spin/de-spin jets to maintain the separation attitude of the spin axis. Spinup may be accomplished by Support Module/Capsule mounted spin/de-spin thrusters, or it may be done by the launch vehicle before separation. Spin axis orientation is verified by a body mounted Sun sensor and a star sensor. The Sun sensor determines the angle between the spin axis and the Spacecraft/Sun line. The star sensor scans a portion of the celestial sphere as the Spacecraft rotates and detects crossings of stars above a given brightness. Sun and star sensor data is telemetered to ground where computer star mapping techniques are used to establish the spin axis orientation. A reorientation of the spin axis (as described in the following) is then made to put the spin axis in the ecliptic plane and to point it toward the Earth.

Upon receipt of commands from the CC&S, the subsystem reorients the Spacecraft spin axis by pulsing of jets directed parallel to the spin axis. The time of pulsing is referenced to the Sun crossing. The pulses operating over part of a revolution generates a precession torque which realigns the spin axis to any arbitrary spatial attitude. This reorientation points the midcourse thrusters in the direction necessary to produce trajectory corrections by velocity change. When proper orientation is achieved, continuous pulsing of the axial jets provides the necessary ΔV. During engine firing, the dynamic stability of the spinning Spacecraft holds the Spacecraft attitude. At the end of the engine thrusting, the Spacecraft is reoriented to its normal Earth-pointing attitude.

The subsystem block diagram is shown in fig. 3.2-2. Sun pointing errors from the Sun sensor and star crossings from the star sensor are applied to the A/C electronics where buffer storage and conditioning of the data takes place. Sun error and star crossing data are then telemetered to the ground for attitude determination and/or verification.

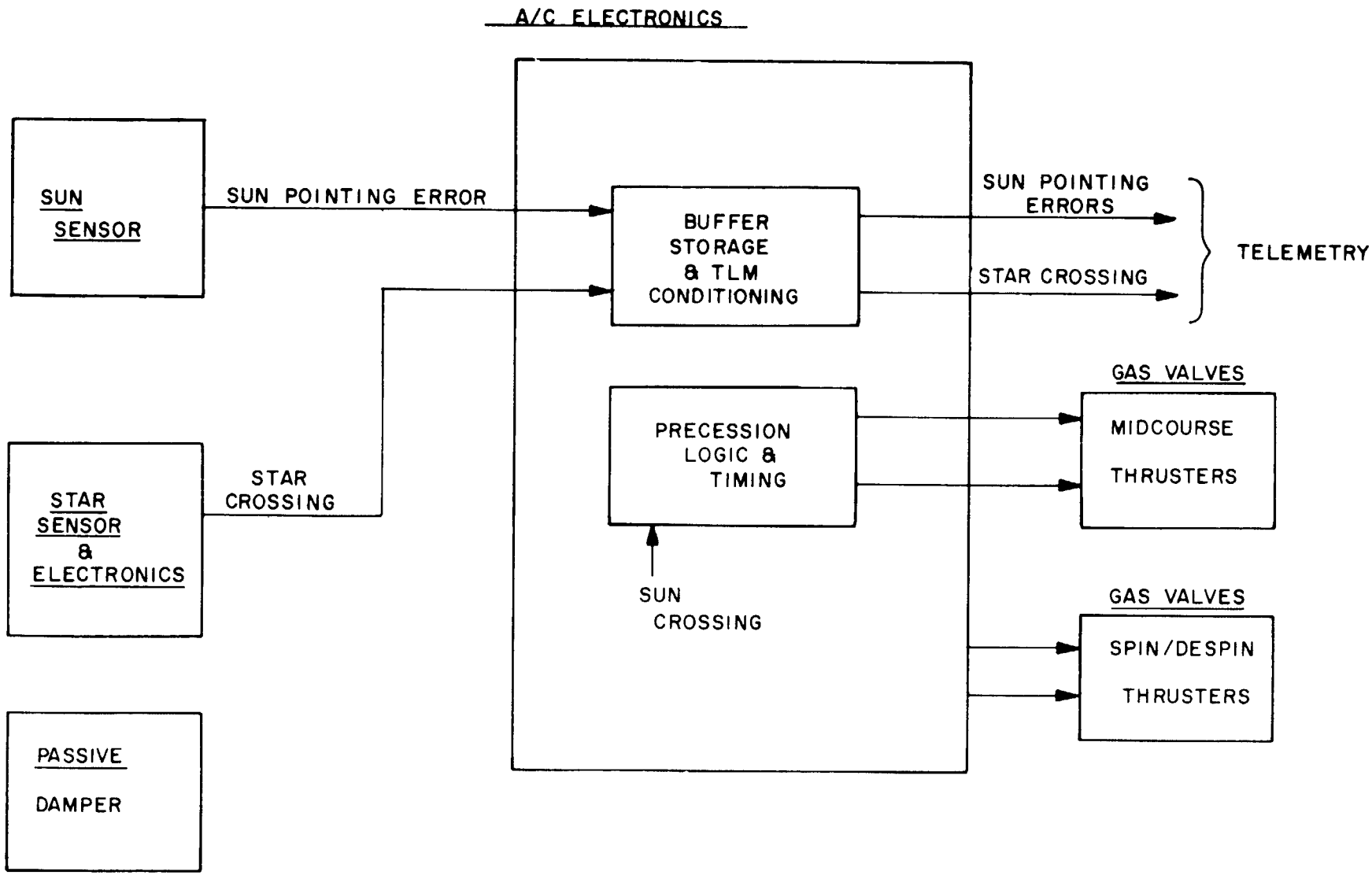

Figure 3.2-2. Spin Stabilized Subsystem Block Diagram

The A/C electronics also accepts spin-up and reorientation commands from the CC&S to operate the appropriate thruster valves. Reorientation commands are time referenced to Sun crossings so that jet pulsing occurs at the proper inertial position in the spin cycle.

The passive damper enhances the natural damping of the Spacecraft to assure alignment of the axis of maximum moment of inertia with the spin momentum vector.

Spin-up of the Spacecraft after separation takes about 6 sec. The Sun and star sensors on the spinning Spacecraft in conjunction with ground processing of the data can measure the Spacecraft attitude to about 0.3°. The main pointing measurement errors are due to misalignment and null shifts of the sensors. Solar pressure torques are negligible but the Earth pointing error will vary slowly as the Earth/Spacecraft line changes in direction during the cruise phase. This necessitates periodic reorientations during the mission.

During engine firing, the error depends on the thrust vector misalignment and CM offset of the Spacecraft. The spin rate must be high enough to withstand these disturbance torques. With a value of 10 rpm, a thrust of 10 lb, and a CM offset of 0.3 in., the orientation error is less than 0.5° during engine firing. With this spin rate, the spin axis can be reoriented by pulsing the jets at an average rate of about 0.5° sec so that a 90° maneuver can be executed in about 3 min of elapsed time.

3.2.4 SPIN AXIS ORIENTATION

Three choices of spin axis orientation were considered; (1) spin axis perpendicular to the ecliptic plane, (2) spin axis parallel to the ecliptic plane and pointing to the Sun, and (3) spin axis parallel to the ecliptic plane and pointing to the Earth. The comparison factors and a relative evaluation of them for each alternative is shown in table 3.2-2. The Earth pointing alternative was chosen primarily because the high gain antenna implementation is much simpler. There is a minor penalty in solar array area. Another penalty is that periodic reorientations are required to remove Earth pointing errors which occur because the Spacecraft-Earthline changes direction while the spin axis remains fixed inertially.

A significant problem with Earth pointing is the loss of Sun pulse reference for jet pulsing as the Earth-Spacecraft-Sun angle changes throughout the flight. The angle decreases from about 45° to 5° and then increases to 40° as the mission progresses. Fortunately, maneuvers are required early and late in the cruise phase when the angle is nearer 45° and a clear Sun pulse can be obtained. The smaller angle and the associated degraded Sun pulse occur in the middle of the mission when no maneuvers are nominally planned.

TABLE 3.2-2. SPIN STABILIZATION SPIN AXIS ORIENTATION ALTERNATIVES

	NORMAL TO ECLIPTIC (GSFC PLANETARY EXPLORER)	SUN POINTING	EARTH POINTING
SOLAR ARRAY UTILIZATION	LEAST EFFICIENT	OPTIMUM	GOOD
EARTH ANTENNA POINTING	DESPUN ARRAY	COMPLEX	SIMPLEST
SPIN REFERENCE STABILITY	INERTIALLY STABLE	FREQUENT REORIENTATION IN TRANSIT	OCCASIONAL REORIENTATION IN TRANSIT
SPIN RATE REFERENCE	SUN PULSE ALWAYS AVAILABLE	COMPLEX-STAR OR EARTH SENSING	SUN PULSE ACCURACY DEGRADED DURING TRANSIT
VENUS APPLICABILITY	GOOD	POOR	POOR
SUMMARY	BEST FOR MULTI-MISSION USE	LEAST DESIRABLE	BEST FOR MARS MISSIONS

3.3 PROPULSION

3.3.1 REQUIREMENTS

The propulsion subsystem for the Support Module must be capable of performing the maneuvers shown in table 3.3-1.

TABLE 3.3-1. MANEUVERS FOR THE PROPULSION SUBSYSTEM, SUPPORT MODULE

Mode	Maneuvers	
	Spin Stabilized	Three-axis Stabilized
Impact Relay (Sterile)	1. Midcourse Corrections 2. Time-of-Flight Separation 3. Orientation	1. Midcourse Corrections 2. Time-of-Flight Separation
Flyby Relay (Non-sterile)	1. Midcourse Corrections 2. Orientation 3. Spin-up	1. Midcourse Corrections
Deflected Flyby Relay (Sterile)	1. Midcourse Corrections 2. Deflection 3. Orientation	1. Midcourse Corrections 2. Deflection
Autonomous Direct (Sterile)	1. Midcourse Corrections 2. Orientation	1. Midcourse Corrections

The midcourse correction maneuvers nominally require a ΔV of 50 meters/sec (mps), and the flyby deflection and time-of-flight separation a ΔV of 60 mps. Spin-up thrusters are not required on the sterile Support Modules, since the entire flight Spacecraft is ejected from the sterilization canister prior to initial spin-up, thereby allowing spin-up to be performed by the Capsule roll control thrusters.

The three-axis stabilized system utilizes as much Mariner hardware as possible; accordingly, orientation and roll control are performed by a separate cold gas system, as on Mariner.

3.3.2 PROPULSION SUBSYSTEM FOR SPIN STABILIZED

The propulsion subsystem for the spin stabilized Support Module is comprised of a pressurant storage assembly which uses helium gas at a nominal pressure of 3600 psi; a pressurant control assembly consisting of the necessary valving, filtration, and regulation components; a propellant storage assembly for storage of anhydrous hydazine in two spherical tanks with positive expulsion bladders; a propellant control assembly with the necessary valves and filters; thrust chamber assemblies providing 5 lbs of thrust each; and the propulsion structure. Four thrusters are required for the sterile modules and six for the non-sterile, the additional two thrusters being required for spin-up. A representative schematic diagram for both the non-sterile and the sterile modes is presented in fig. 3.3-1. A weight breakdown is provided in table 3.3-2.

A monopropellant system was selected for this mission on the basis of a cursory trade study and the experience gained on prior planetary studies performed by GE-RS. Monopropellants were selected over solid propellants because of the requirement for a restart capability and a variable impulse for multiple midcourse corrections. Monopropellants were chosen over bipropellants because past studies have proven that at low total impulse requirements, such as for this mission, monopropellant engines are lighter. Additionally, they are inherently more reliable due to fewer components.

A thrust level of 5 lb was selected as a compromise to the several mission maneuver requirements shown in the following table. Such 5 lb thrusters are known to have been flight proven on the ATS program and a classified DOD Program.

Maneuver	No. of Thrusters	Total Thrust	Approximate Total Hot Firing Time*
Midcourse	2	10 lbf	1000 sec
Time-of-Flight	2	10 lbf	330 sec
Orientation	2	10 lbf	10 sec
Spin-up	2	10 lbf	6 sec

*This is only the on-time of the thruster

Typical performance for a 5 lb thruster is:

1) Steady state I_{sp} = 227 sec

2) Pulsing I_{sp} (0.100 sec pulses) = 216 sec

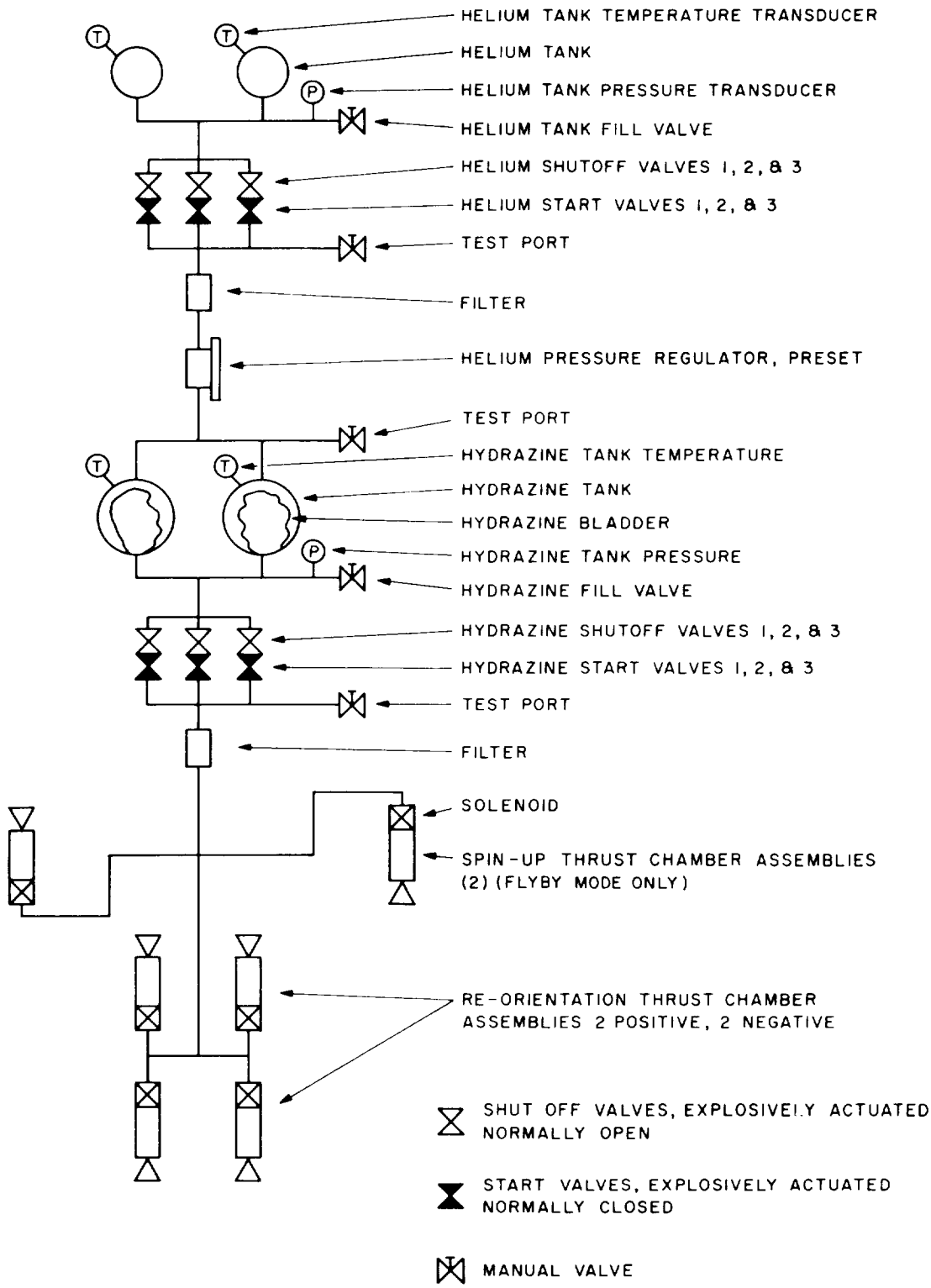

Figure 3.3-1. Propulsion Subsystem Schematic Diagram, Spin Stabilization

TABLE 3.3-2. PROPULSION SYSTEM WEIGHT BREAKDOWN

	Spin Stabilized			Three-axis Stabilized		
	Direct Link	Sterile Relay	Non-Sterile Relay	Direct Link	Sterile Relay	Non-Sterile Relay
Propellant	47	63	47	44	59	44
Midcourse	47	47	47	44	44	44
Time-of-Flight or deflection	0	16	0	0	15	0
Inert	32	32	30	31	31	27
Structure	6.1	6.1	5.5	4.1	4.1	3.5
Propellant Tanks	5.5	5.5	3.8	5.1	5.1	3.5
Pressurant Tanks	6.7	6.7	5.0	6.2	6.2	4.7
Thrust Chambers	2.0 (1)	2.0 (1)	2.5 (1)	5.9 (2)	5.9 (2)	5.9 (2)
Other (3)	10.0	10.0	12.0	8.3	8.3	8.3
Residual Propellant	1.4	1.9	1.4	1.3	1.8	1.3
TOTAL PROPULSION	77	95	77	71	90	71

(1) 5 lbf thrust chambers at 0.5 lbm/ea.

(2) 50 lbf thrust chamber (hydrazine)

(3) Includes valves, regulators, filters, tubing, instrumentation fittings, etc.

3) Response

a) Electrical signal to 90 percent P_c (cold) = 0.032 sec

b) Electrical signal to 90 percent P_c (hot) = 0.025 sec

4) Total pulse capability: In excess of 200,000

The weight breakdown presented in table 3.3-2 assumes the pressurant and propellant are asceptically loaded for the sterile mode. The spin stabilized system was analyzed with respect to heat sterilizing after loading pressurant and propellant. This results in a weight increase of 3 pounds, which is comparable to the accuracy of these weight estimates.

3.3.3 PROPULSION SUBSYSTEM FOR THREE-AXIS STABILIZED

The propulsion subsystem for the three-axis stabilized Support Module is the same as the Mariner '69 propulsion system except for the amount of propellant and the structural arrangement. The mission described herein requires approximately 44 lbs of hydrazine propellant, an increase of 22.5 lb over that required for Mariner '69. The Mariner '69 propulsion subsystem was designed by JPL as a completely modular unit; however, due to the requirements of the support module, structural and mounting provisions will change.

The Mariner '69 engine is schematically shown in fig. 3.3-2. High pressure nitrogen is regulated down to 308 psia feeding propellant from the propellant storage tank to the rocket engine. Propellant and pressurant on/off flow control is accomplished with multiple start and stop explosive valves. The propellant tank contains a butyl rubber bladder for positive expulsion. The thrust chamber assembly contains Shell 405 catalyst for spontaneous ignition and sustained decomposition of the hydrazine. Four jet vanes included in the thrust vector control assembly are located at the exit plane of the nozzle and are used to provide roll and yaw control during the engine burn sequence.

A weight breakdown of the propulsion subsystem, as modified for the Support Module, is presented in table 3.3-2.

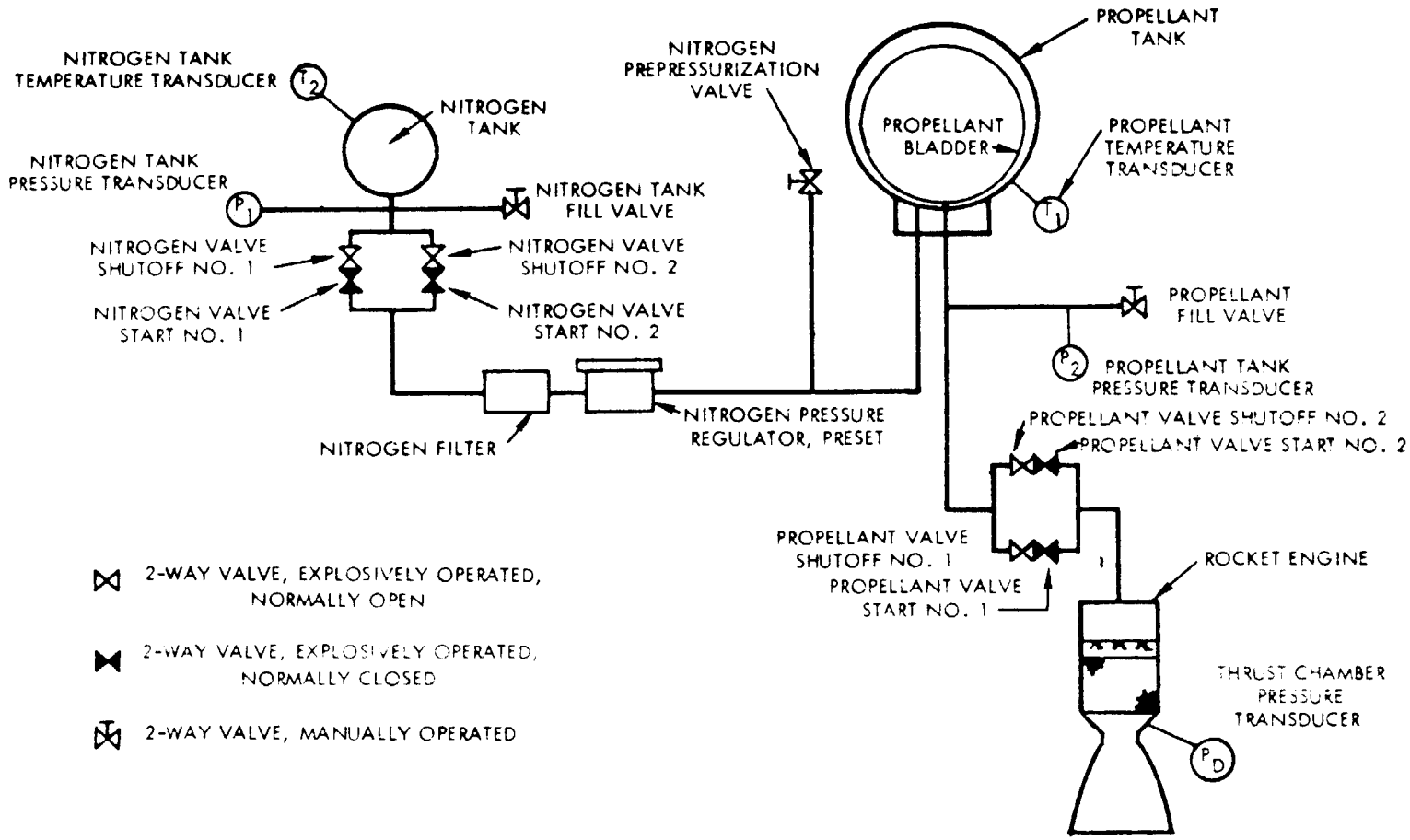

Figure 3.3-2. MM69 Propulsion Subsystem Schematic Diagram
(Ref: TRW Report MM0.4701.68-043)

3.4 CONFIGURATION

The Autonomous Capsule Support Module for this study was considered to be a completely new structure; i.e., no use made of any existing Mariner structrual hardware.

The method of support of the Flight Spacecraft within the launch shroud can be tabulated into five basic types (see figure 3.4-1). This study considered unsterilized Support Modules. The arguments and conclusion are equally applicable to sterilized Support Modules which are contained inside the Canister.

Type 1. This shows the Lander supported nose down and the aft portion of the sterilization canister as a load-carrying structure, carrying the Capsule loads by beam bending direct to the launch vehicle flight shroud. Support Module loads are also added to and taken through the reinforced portion of this sterilization canister.

Type 2. This is similar to Type 1, except for the addition of a separate Spacecraft support adapter. This concept has the advantage of being able to jettison the complete "hammerhead" flight shroud. However, the launch weight is higher due to the addition of the separate support adapter.

Type 3. This shows the Lander supported nose up with all of the Capsule loads travelling through the Support Module to a separate support adapter, creating a very simple and straightforward load path.

Type 4. This is similar to Type 3, except that the Spacecraft loads are beamed out to the launch vehicle flight shroud via the fixed solar array panels and the truss section.

Type 5. This shows an integral sterilization canister to flight shroud support concept. The Spacecraft loads here are carried directly to the flight shroud but via the integrated load-carrying sterilization canister.

A cursory look at the weight advantages of these various types of support concepts showed Type 3 to be slightly more advantageous. However, due to the stackup nature of this concept (adapter, Support Module, Capsule), the load applied at the Transtage interface is higher. Types 1, 4 and 5 do not seem to be very desirable methods due to their added complexity with the launch vehicle shroud and due to the added weight that must be boosted onto the heliocentric transfer orbit. Type 5 also requires a dorsal fairing across the Spacecraft/launch vehicle interface joint to carry the umbilical harnesses between the Lander and the Support Module, and also from the Flight Spacecraft and launch vehicle. Configuration concepts during this study were based upon the Type 3 configuration.

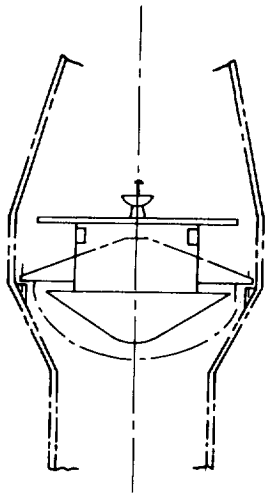

TYPE 1

S/C LOAD CARRIED THRU BIO BARRIER	NOT TOO EFFICIENT DUE TO CANTILEVERED BEAM TYPE SUPPORT
LOAD HAS TO BE BEAMED TO MAX S/C DIA.	
SEPARATE ADAPTER REQUIRED TO SUPPORT VEHICLE	ADAPTER REQUIRED TO GO TO S/C MAX DIA. AND AROUND BIO BARRIER MAKES FOR A LARGE AND LONG ADAPTER ADDING WT.
COMPLETE "HAMMER HEAD" SHROUD CAN BE SEPARATED	LOWERS HELIO TRANSFER WT.

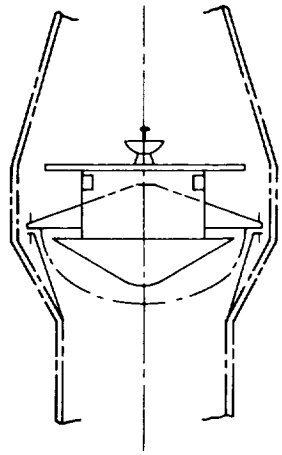

TYPE 2

(1) S/C LOAD CARRIED THRU BIO BARRIER	NOT TOO EFFICIENT DUE TO CANTILEVERED BEAM
(2) LOAD HAS TO BE BEAMED TO MAX S/C DIA.	
(3) S/C LOAD SUPPORTED BY FLIGHT SHROUD	SHROUD WOULD HAVE TO BE "BEEFED" UP
(4) COMPLETE "HAMMER HEAD" FLIGHT SHROUD CANNOT BE SEPARATED	MORE WEIGHT TO BE BOOSTED INTO HELIO TRANSFER

(1) S/C LOAD (
THRU NEW
MODULE

(2) LANDER W
FROM SUPI

(3) SEPARATE
REQUIRED
PORT VEHI

(4) COMPLETE
HEAD" SHR
BE SEPARA

FOLDOUT FRAME 1

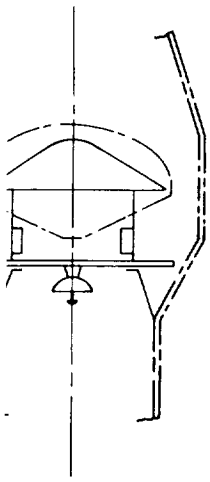

TYPE 3

RRIED PPORT	ADDS WT. TO S/C SUPPORT MODULE
FURTHER RT POINT	ADDS WT. TO S/C SUPPORT MODULE BUT LOAD PATH MORE DIRECT
DAPTER SUP- E	ADAPTER MIN. LENGTH AND DIA. MIN. WT. INCREASE
HAMMER D CAN D	LOWERS HELIO TRANSFER WT.

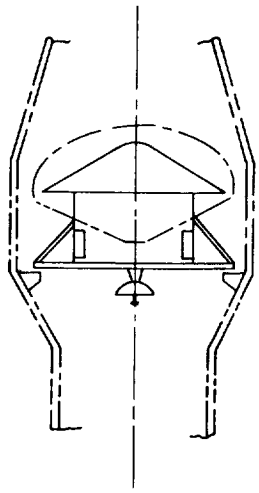

TYPE 4

(1) S/C LOAD CARRIED THRU SUPPORT STRUCTURE	ADDS MORE WT. TO SUPPORT MODULE
(2) S/C LOAD CARRIED OUT OT MAX. DIA.	LOAD HAS TO BE BEAMED OUT ALONG SOLAR ARRAY & TRUSS SUPPORTED
(3) LOAD SUPPORTED BY FLIGHT SHROUD	SHROUD REQUIRES BEEFING UP
(4) COMPLETE HAMMER HEAD" FLIGHT SHROUD CANNOT BE SEPARATED	MORE WT. TO BE BOOSTED INTO HELIO TRANSFER

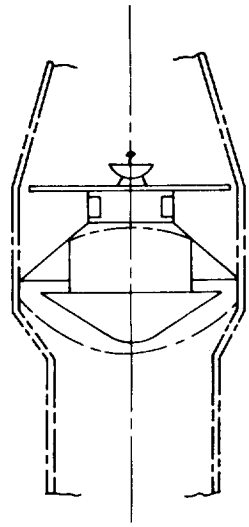

TYPE 5

(1) S/C LOAD CARRIED THRU BIO BARRIER	
(2) LOAD HAS TO BE BEAMED TO MAX S/C DIA	NOT TOO EFFECIENT DUE TO CANTILEVERED BEAM TYPE SUPPORT
(3) S/C LOAD SUPPORTED BY FLIGHT SHROUD	SHROUD WOULD HAVE TO BE BEEFED UP
(4) COMPLETE "HAMMER HEAD" FLIGHT SHROUD CANNOT BE SEPARATED	MORE WEIGHT TO BE BOOSTED INTO HELIO TRANSFER ORBIT
(5) SHROUD DIA. KEPT TO A MINIMUM	LESS OVERALL LIFT-OFF WEIGHT
(6) DORSAL FAIRING REQUIRED ACCESS S/C SEPARATION	

Figure 3.4-1. Methods of Support for Flight Spacecraft

FOLDOUT FRAME 2

3.4.1 THREE-AXIS STABILIZED, NON-STERILE, SUPPORT MODULE

The Spacecraft shown in figure 3.4-2 consists of three basic modules: the Spacecraft Adapter Module, Support Module and the Flight Capsule Module.

The Spacecraft Adapter Module is a simple semi-monocoque conical structure, extending from the Titan III interface up to the Spacecraft separation plane. Its length is dependent on final sizing of the antennas which extend down into the inside of the conical adapter.

The Spacecraft Support Module extends from the Spacecraft separation plane up to the Flight Capsule interface for normal manufacturing and field installation. However, during flyby the Support Module also contains the aft sterilization canister and the internal Capsule adapter section. The Support Module consists of a basic cylindrical section which serves as a load-carrying structure for the flight Capsule and a support structure to shich the electronic equipment are attached. Mariner type bays can be designed into this section so that existing Mariner equipment can be used. The bulkhead between the Support Module and adapter carries solar cells, attitude control nozzles, antennas and the midcourse engine assembly.

3.4.2 SPIN STABILIZED, NON-STERILE, SUPPORT MODULE

Figure 3.4-3 depicts the vehicle in the launch orientation. The Spacecraft is an Earth-oriented, spin-stabilized vehicle. High and low gain antennas are located on the solar cell side of the vehicle, pointing directly to Earth along the roll axis. The solar array area is approximately 40 percent larger than for the three-axis stabilized vehicle due to off-Sun pointing up to approximately plus or minus 40°.

The Support Module is basically the same as described in Section 3.4.1, except that the bulkhead between the cylindrical section and the spacecraft adapter carries the attitude control, maneuver, and spin control nozzles on the extremities of the panel. The high and low gain antennas are fixed, pointing along the roll axis. The relay antenna is stowed inside of the sterilization canister and deployed after separation of the Lander from the Support Module.

3.4.3 SPIN-STABILIZED STERILE SUPPORT MODULE

This configuration consists of two basic modules: the Support Module and the Lander (separated Capsule) and is shown in figure 3.4-4. These two basic modules are encased in the sterilization canister and bolted directly the Titan Transtage interface. After the space vehicle has been boosted into the heliocentric transfer orbit, the forward portion of the canister is separated, and then the Spacecraft is separated. The aft canister and integral adapter remain behind with the Transtage booster section. The Spacecraft, after achieving separation, is spun up and oriented with roll axis to Earth.

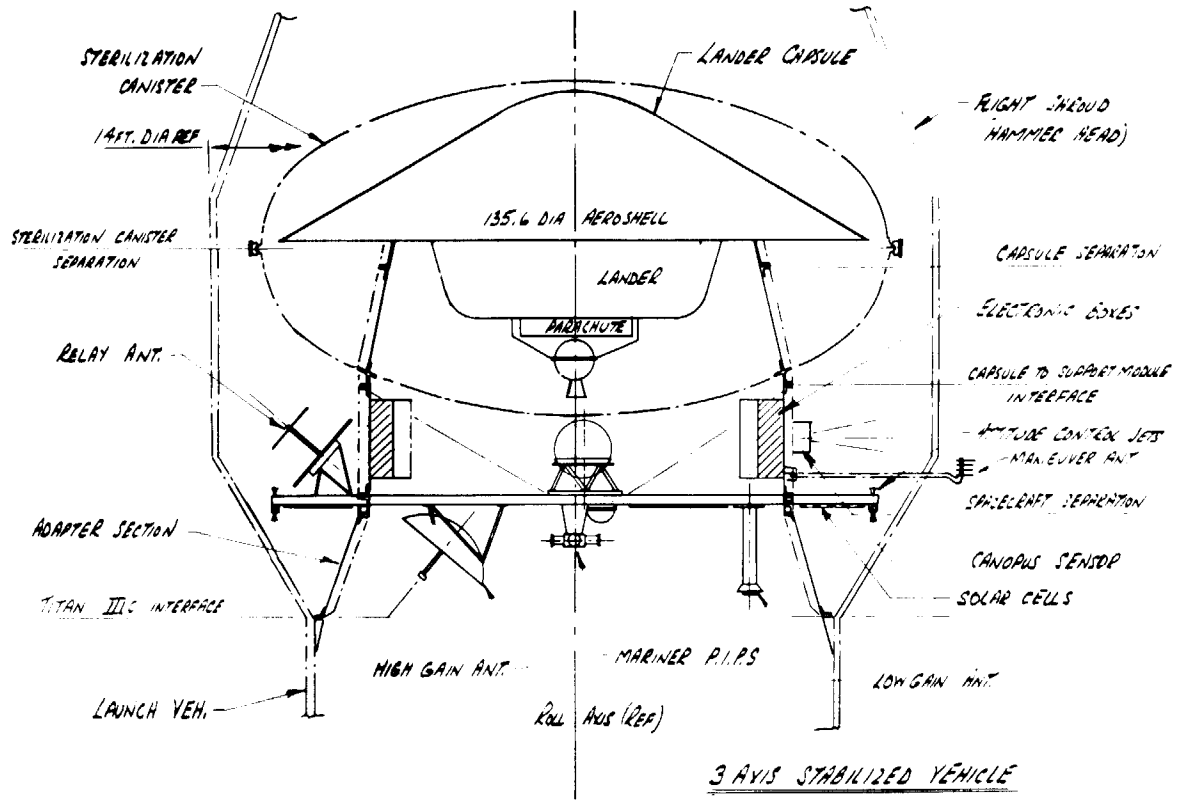

Figure 3.4-2. Typical Spacecraft Configuration Non-sterile, 3-Axis Stabilized Support Module

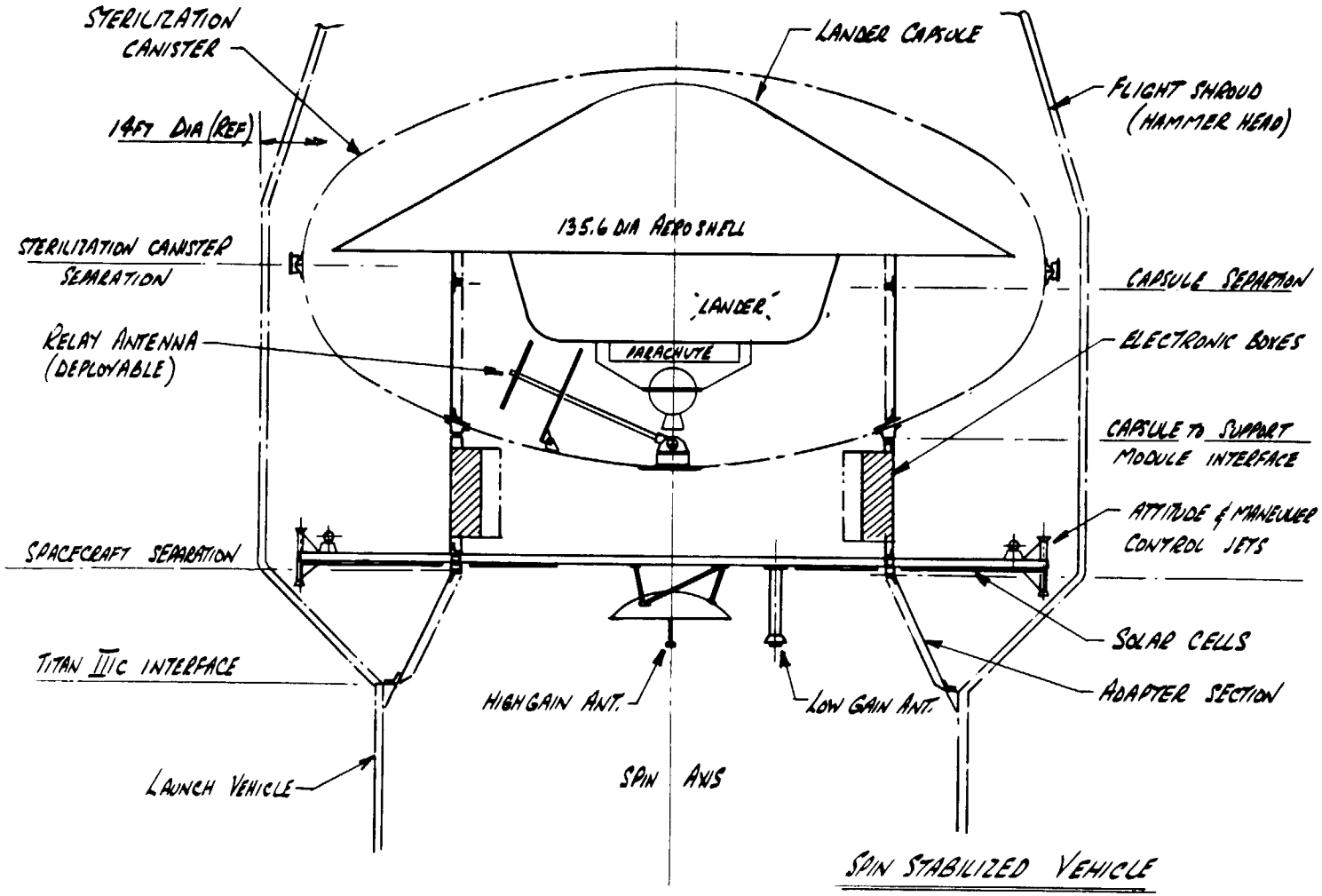

Figure 3.4-3. Typical Spacecraft Configuration Non-sterile, Spin-stabilized Support Module

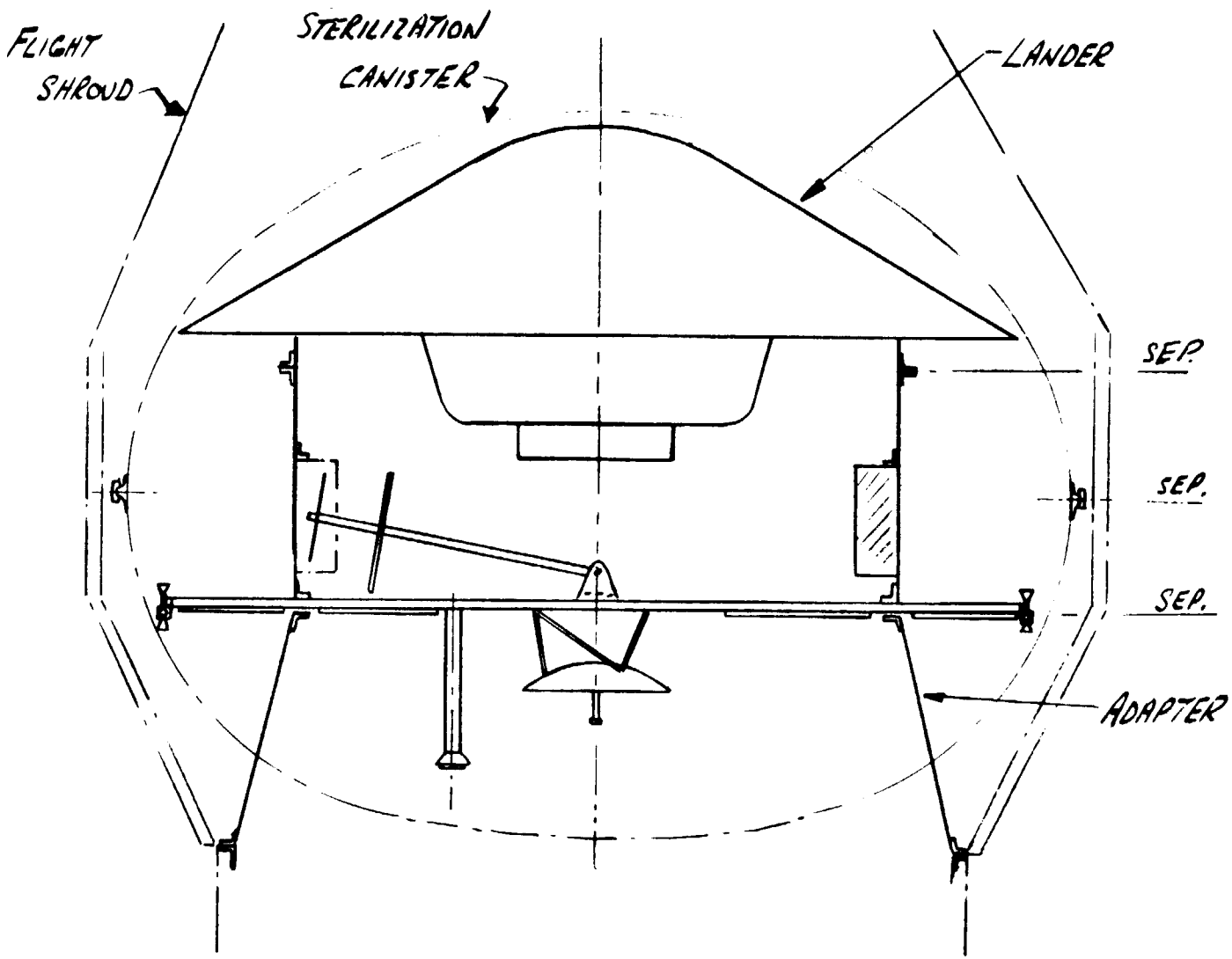

Figure 3.4-4. Typical Spacecraft Configuration, Sterile Support Module

The Spacecraft shown in figure 3.4-4 is spin stabilized; however a three-axis stabilized vehicle could also be packaged within a sterilization canister similar to that shown. The basic structural build-up of the sterile Support Module is as described for the non-sterile vehicle, except that this structure and the electronic components must all be subjected to the sterilization cycle.

3.4.4 STERILE SUPPORT MODULE FOR TRULY AUTONOMOUS

Figure 3.4-5 represents the case where all communication is on a direct link to Earth during the entry phase. Two basic modules are encased within the sterilization canister similar to that configuration described in Section 3.4.3. No relay or high gain antennas are required on the Support Modules. No de-orbit engine is required on the Lander. This allows for a very flat and compact configuration.

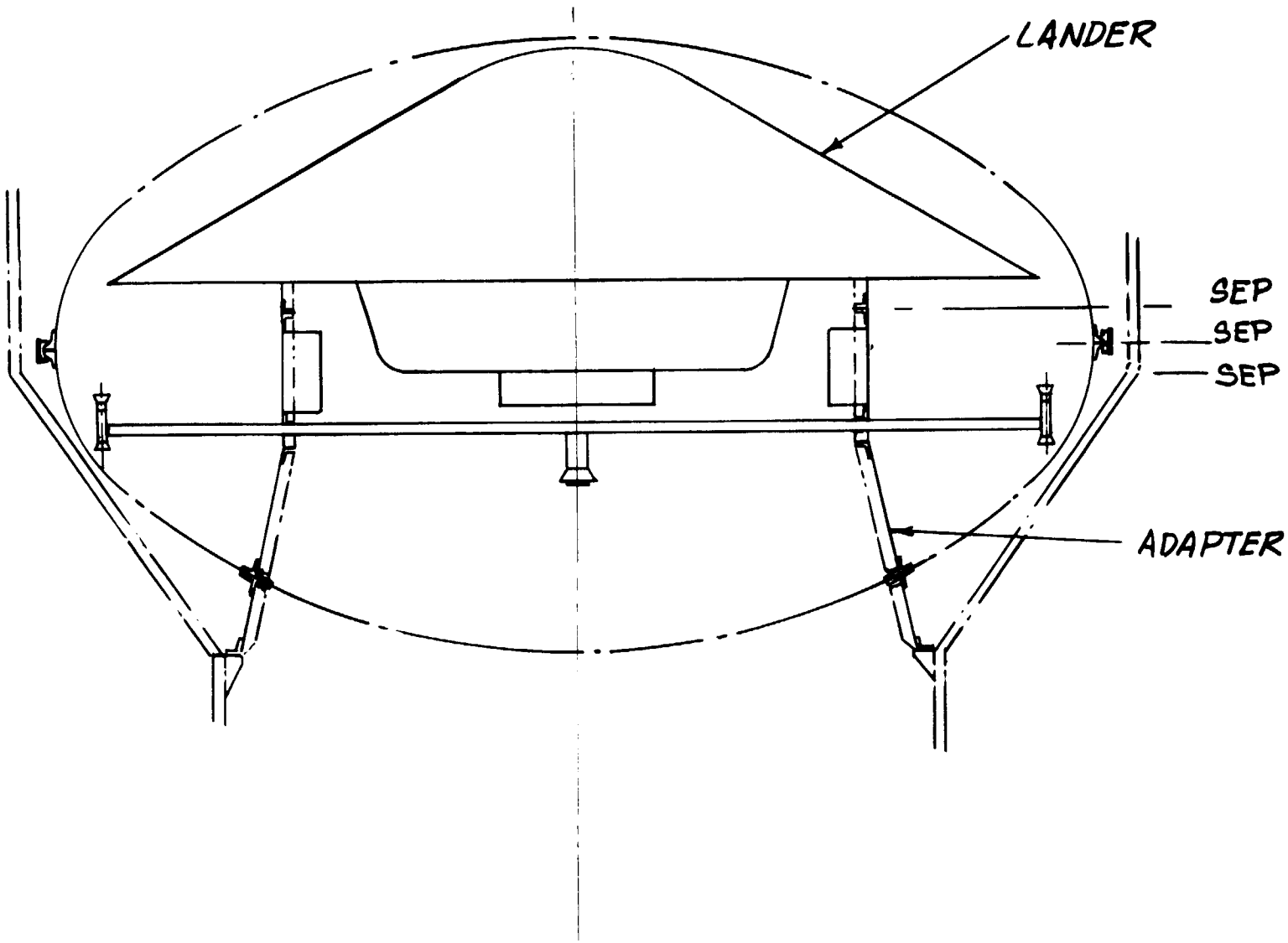

Figure 3.4-5. Typical Spacecraft Configuration, Autonomous Capsule

3.5 SUMMARY OF SUPPORT MODULE

Table 3.5-1 is a summary of the Support Module hardware alternatives by subsystem. It is clear that all of the Support Modules discussed in the preceding section will require essentially new structure, cabling, and mechanical devices. Likewise, for those Support Modules which perform a relay function, the UHF relay subsytem is essentially a new design.

For the remaining subsystems, however, existing space hardware may fulfill the subsystem requirements fully or in part. For example, it should be possible to adapt the Mariner Mars '71 louvers to the requirements of the '73 Support Module. Likewise, the MM'71 pyro controllers are probably suitable for use in '73. The MM'71 Central Computer and Sequencer and Flight Command Subsystem are probably more than adequate to fulfill the '73 sequencing and command requirements. The same applies to the '71 Flight Telemetry Subsystem, except that certain modifications are required to multiplex Capsule telemetry data with Support Module telemetry data and to accommodate the mission peculiar data rates in '73. The MM '69 digital tape recorder (DTR) has a storage capacity of 2.3×10^7 bits, which is ample for storage of Capsule entry and post-impact imaging data. It is likely, however, that certain speed change modifications would be required for the '73 system. Sterilizability of this recorder is suspect and it has not been included on Support Modules which must be sterilized.

For the three-axis stabilized Support Modules, the MM '71 radio electronics generally fulfill the '73 mission requirements; however, mission peculiar high gain, low gain, and maneuver antennas are required. In the spin-stabilized case, it may be necessary to incorporate a higher power amplifier than the 20-watt output of the MM '69/'71 TWT. This results from the requirement for Earth verification of Spacecraft attitude at any arbitrary midcourse maneuver attitude. After achieving the desired midcourse correction attitude, the three-axis stabilized Spacecraft may be rolled about its thrust axis until the maneuver antenna illuminates the Earth, thereby establishing downlink communications. This approach is, of course, not applicable to a spinning Spacecraft which implies that the pattern of the spin-stabilized maneuver antenna must nominally be spherical to account for any arbitrary maneuver attitude. To offset the reduced gain associated with such a pattern, it is necessary to increase the power amplifier output in the maneuver mode to around 50 watts, which is beyond the capability of existing planetary or cislunar hardware.

For both types of stabilization, existing thrust chamber assemblies may be employed. It is generally necessary, however, to design new tanks, lines, valves, and propulsion support structure.

As discussed in Section 3.2, much of the MM'69 Attitude Control Subsystem is applicable to the three-axis stabilized Support Module. Although the spin-stabilized Attitude Control Subsystem is simpler than its three-axis counterpart, it is probable that

TABLE 3.5-1. SUPPORT MODULE HARDWARE

SUBSYSTEM	"OFF-THE - SHELF" HARDWARE		NEW HARDWARE	
STRUCTURE			ENTIRE	
CABLING			ENTIRE	
MECHANICAL DEVICES			ENTIRE	
RELAY			ENTIRE	
TEMPERATURE CONTROL	MM'71 LOUVERS		REMAINDER	
PYROTECHNICS	MM'71 PYRO CONTROLLERS		SQUIBS & RELEASE DEVICES	
COMPUTER & SEQUENCER	MM'71			
COMMAND	MM'71			
TELEMETRY	MM'71 WITH SLIGHT MODIFICATION			
DATA STORAGE	MM'69 DTR MODIFIED			
	3 - AXIS	SPIN	3-AXIS	SPIN
RADIO	MM'71 EXCEPT FOR ANTENNAS	MM'71 RECEIVER & EXCITERS	ANTENNAS	ANTENNAS & POWER AMPLIFER
PROPULSION	MM'69 THRUST CHAMBER ASSY	ATS THRUSTER	TANKS	REMAINDER
ATTITUDE CONTROL	MM'69 WITH MODIFIED AUTOPILOT	SUN SENSORS		REMAINDER

any existing hardare would have to be modified for the parameters of a planetary mission.

The Support Module system power demand is summarized by mission phase and subsystem in table 3.5-2. The wattages tabulated thereon have been converted to equivalent dc watts at the solar array. The first group of subsystems are those of which the power demand is relatively independent of the type of Support Module stabilization. The Attitude Control and Radio Subsystems are, however, dependent in their power demand on the type of Support Module stabilization. For example, the three-axis Attitude Control Subsystem required gyro and autopilot power when in the maneuver phase. The spin stabilized Radio Subsystem requires raw dc for the 50-watt mode of the power amplifier in the maneuver phase.

In either case of stabilization, the solar array is sized by a demand of approximately 227 watts dc during the store and relay phase of the Support Module mission. This converts into approximately 50 ft^2 of solar array for the three-axis stabilized support module, and 72 ft^2 of solar array for the spin-stabilized Support Module. The latter results from the fact that the Sun is approximately 45° off the Earth-pointing spin axis at encounter.

During maneuvers, approximately 264 and 396 watts of power are required by the three-axis stabilized and spin-stabilized Support Modules, respectively. Assuming that the Mariner '71 power system hardware is employed for the '73 Support Module, the former demand is well within the 1200 watt-hr capacity of the Mariner AgZn battery. The 396 watt demand of the spin-stabilized Support Module is also well within the Mariner battery capacity, but the times that the spin-stabilized Support Module could remain off the Sun would be reduced by about one-third. A singular advantage of the spin-stabilized approach is that 400 Hz power distribution may be eliminated, since there are no Mariner gyros to be powered.

Finally, table 3.5-3 is a summary tabulation of the spin and three-axis stabilized Support Module weights by subsystem for the various mission modes of operation. The weights tabulated for the flyby relay cases are for that alternative where the Flight Spacecraft approaches the planet on flyby trajectory; for the alternative of a deflected flyby, a slight increase must be made in the Propulsion listing. The right-hand column of the figure lists the corresponding weights for MM '69 stripped of all science and science related equipment.

From table 3.5-3, it can be seen that the weight of a spin stabilized, relay Support Module is about fifty lb less than that of its corresponding three-axis stabilized counterpart. Furthermore, the weight of the three-axis stabilized, relay Support Module is compariable to a stripped Mariner '69. Finally, the weight of a Support Module for a direct link mission is some 130 lb less than for the relay mission. This latter savings must be taken in the proper perspective, in that the weight of the Capsule must be increased to accommodate those mission functions no longer performed by the Support Module.

any existing hardare would have to be modified for the parameters of a planetary mission.

The Support Module system power demand is summarized by mission phase and subsystem in table 3.5-2. The wattages tabulated thereon have been converted to equivalent dc watts at the solar array. The first group of subsystems are those of which the power demand is relatively independent of the type of Support Module stabilization. The Attitude Control and Radio Subsystems are, however, dependent in their power demand on the type of Support Module stabilization. For example, the three-axis Attitude Control Subsystem required gyro and autopilot power when in the maneuver phase. The spin stabilized Radio Subsystem requires raw dc for the 50-watt mode of the power amplifier in the maneuver phase.

In either case of stabilization, the solar array is sized by a demand of approximately 227 watts dc during the store and relay phase of the Support Module mission. This converts into approximately 50 ft^2 of solar array for the three-axis stabilized support module, and 72 ft^2 of solar array for the spin-stabilized Support Module. The latter results from the fact that the Sun is approximately 45° off the Earth-pointing spin axis at encounter.

During maneuvers, approximately 264 and 396 watts of power are required by the three-axis stabilized and spin-stabilized Support Modules, respectively. Assuming that the Mariner '71 power system hardware is employed for the '73 Support Module, the former demand is well within the 1200 watt-hr capacity of the Mariner AgZn battery. The 396 watt demand of the spin-stabilized Support Module is also well within the Mariner battery capacity, but the times that the spin-stabilized Support Module could remain off the Sun would be reduced by about one-third. A singular advantage of the spin-stabilized approach is that 400 Hz power distribution may be eliminated, since there are no Mariner gyros to be powered.

Finally, table 3.5-3 is a summary tabulation of the spin and three-axis stabilized Support Module weights by subsystem for the various mission modes of operation. The weights tabulated for the flyby relay cases are for that alternative where the Flight Spacecraft approaches the planet on flyby trajectory; for the alternative of a deflected flyby, a slight increase must be made in the Propulsion listing. The right-hand column of the figure lists the corresponding weights for MM '69 stripped of all science and science related equipment.

From table 3.5-3, it can be seen that the weight of a spin stabilized, relay Support Module is about fifty lb less than that of its corresponding three-axis stabilized counterpart. Furthermore, the weight of the three-axis stabilized, relay Support Module is compariable to a stripped Mariner '69. Finally, the weight of a Support Module for a direct link mission is some 130 lb less than for the relay mission. This latter savings must be taken in the proper perspective, in that the weight of the Capsule must be increased to accommodate those mission functions no longer performed by the Support Module.

TABLE 3.5-2. POWER SYSTEM SUMMARY

SUBSYSTEM	POWER DEMAND (WATTS DC)			
	CRUISE	MANEUVERS	STORE & RELAY	REAL TIME RELAY
COMMAND	4	4	4	4
TELEMETRY	21	21	21	21
DATA STORAGE			38	
RELAY			1	1
COMPUTER & SEQ.	27	27	27	27
POWER	5	5	5	5
TEMP. CONTROL	20	20	20	20
PYROS	1	1	1	1
FLIGHT CAPSULE	22	22		
SUBTOTAL	100	100	117	78
3-AXIS STABILIZATION				
ATTITUDE CONTROL	5	59	5	5
RADIO	105	105	105	105
TOTAL	210	264	227	188

- MM '71 POWER SYSTEM
- 50 FT^2 SOLAR ARRAY

SPIN STABILIZATION				
ATTITUDE CONTROL	5	5	5	5
RADIO	105	291	105	105
TOTAL	205	396	227	188

- MM '71 POWER SYSTEM
- ELIMINATE 400 HZ DISTRIBUTION
- 72 FT^2 SOLAR ARRAY
- 2-3 HR OFF-SUN TIME LIMITATION

TABLE 3.5-3. COMPARATIVE SUPPORT MODULE WEIGHTS

SUBSYSTEM	SPIN STABILIZED				THREE-AXIS STABILIZED				MM '69
	NO RELAY AU-TONO-MOUS	STER-ILE IMPACT RELAY	Sterile Flyby Real Time Relay	FLYBY STORE & RELAY	NO RELAY	IMPACT RELAY	Sterile Flyby Real Time Relay	FLYBY STORE & RELAY	
RADIO	45	56	56	56	49	60	60	60	56
COMMAND	--	8	8	8	--	8	8	8	8
TELEMETRY	9	22	22	22	9	22	22	22	22
DATA STORAGE	--	--	--	17	--	--	--	34	19*
RELAY	--	3	3	3	--	5	5	5	--
ATTITUDE CONTROL	15	15	15	15	62	62	62	62	62
POWER	110	110	110	110	101	101	101	101	121
COMPUTER & SEQ.	--	24	24	24	--	24	24	24	24
PROPULSION	77	95	95	77	71	90	90	71	47
PYROTECHNICS	10	10	10	10	--	10	10	10	11
MECH. DEVICES	14	19	19	19	10	10	10	19	17**
TEMP. CONTROL	16	23	23	23	18	26	26	26	29
CABLING	29	41	41	41	41	57.9	57.9	57.9	67
STRUCTURE	193	213	213	213	193	213	213	213	154
TOTAL	518	639	639	638	554	689	689	704	637

* LESS ANALOG RECORDER
**LESS SCAN PLATFORM

4. FLIGHT CAPSULE DESIGN DESCRIPTION

4. FLIGHT CAPSULE DESIGN DESCRIPTION

4.1 DESIGN SUMMARY

Two Spacecraft design approaches were developed in this study of an Autonomous Capsule, Mars mission concept. In both Spacecraft designs the Entry Vehicle and the Support Module are sterilized systems encapsulated in a canister for the launch. The Titan injects the Spacecraft on a flyby trajectory to preclude accidental impact of Mars by the unsterilized portions of the Autonomous Capsule and the Transtage. After separation, the spacecraft (Entry Vehicle and Support Module) maneuvers to a Mars inpact trajectory.

The Spacecraft is spin stabilized during cruise with the Spacecraft spin axis pointing to Earth and the Support Module on the Sun side of the Spacecraft. A fixed antenna is used for the communication link to Earth and the solar arrays are sized to accommodate the angle between the spin axis and the Spacecraft center line to the Sun.

In this autonomous mission design, the forward half of the canister is jettisoned before the Transtage leaves the Earth parking orbit. The adapter and aft canister remain with the transtage when the Spacecraft is separated for the interplanetary cruise. The basic difference in the Autonomous Capsule designs is the way that the entry science data is transmitted to Earth. In the first Capsule design, termed "Truly" Autonomous, the Support Module is separated from the Flight Capsule about 24 hr from entry and is no longer a part of the Mars mission sequence. The Entry Vehicle performs the entry science measurements and transmits the data direct in real time to Earth DSIF station. For this direct to Earth Transmission link it is necessary that the Earth be in view of the Capsule during entry and landing and therefore a southern latitude landing site was required consistent with the appropriate mission parameters of launch and arrival dates, launch energy and the declination of the launch asymptote. The Sun, however, is in the northern Mars hemisphere and therefore the solar panels required for the surface operations in the southern latitude are considerably larger than the power panel required for operations in the north (40 ft^2 of array compared to 25 ft^2). The Support Module provides the electric power, the communication link, the attitude control, navigation, and midcourse correction propulsion required up to Entry Vehicle separation for planet entry.

4.2 TRULY AUTONOMOUS CAPSULE

The design approach, composition and the launch configuration of the Autonomous Capsule design is shown on fig. 4.2-1. The load path in launch and ascent is shown passing from the Transtage to the shell structure adapter (external to the Canister), and by an internal structure to the 8 ft diameter Support Module body. The weight of this combined external and internal adapter structure is 149 lb. The Support Module is connected at a torque box closure of the Flight Capsule base diameter. With a sterilization canister outside diameter of 162 in., it is estimated that the launch vehicle flight fairing will be 192 in. and bulbous with respect to the 10 ft diameter Transtage of the Titan.

For a direct entry ranging in path angle from 16° to 32°, at a nominal velocity of 20,800 ft/sec and a ballistic parameter $(\frac{W}{C_dA})$ limit of 8 lb/ft^2 the entry system aeroshell selected is a blunt, high drag sphere cone. The nose to base radius ratio of the aeroshell is 0.5, the half cone is 60° and the base diameter is 12.7 ft.

4.2.1 AEROSHELL STRUCTURE

Shell bending was determined to be the critical structural loading and is induced under the inertial loading of the shell interior by the Lander system and by the exterior pressure loading of the shell in ballistic flight. Since bending is critical, aluminum honeycomb construction is competitive with the lighter materials (berylium, titanium, magnesium), is lighter than stainless steel and is easiest of the candidate materials to fabricate. Accordingly, the shell selected is a 1 in. aluminum core with HT 424 bonded face sheets.

4.2.2 HEAT SHIELD

The heat shield selected is an ablative design with an elastomeric material that is soft-bonded to the aeroshell structure. The material formulation typical for this entry application is GE ESM 1004 AP (35 lb/ft^3) bonded to the shell with GE RTV 560. The shield is prepared by bonding finish size shield segments with the joints scarfed, placed at the mid point of the tiles in front and in back and with the longitudinal joints at an angle to elements of the cone to prevent torque generation in flight. The nose cap is removable for access to the Lander within the aeroshell. The cap contains a berylium disc in which taps are made for four pressure and one temperature reading and the atmospheric sampling of the mass spectrometer. The berylium disc protects the measurements taken during entry from ablative products.

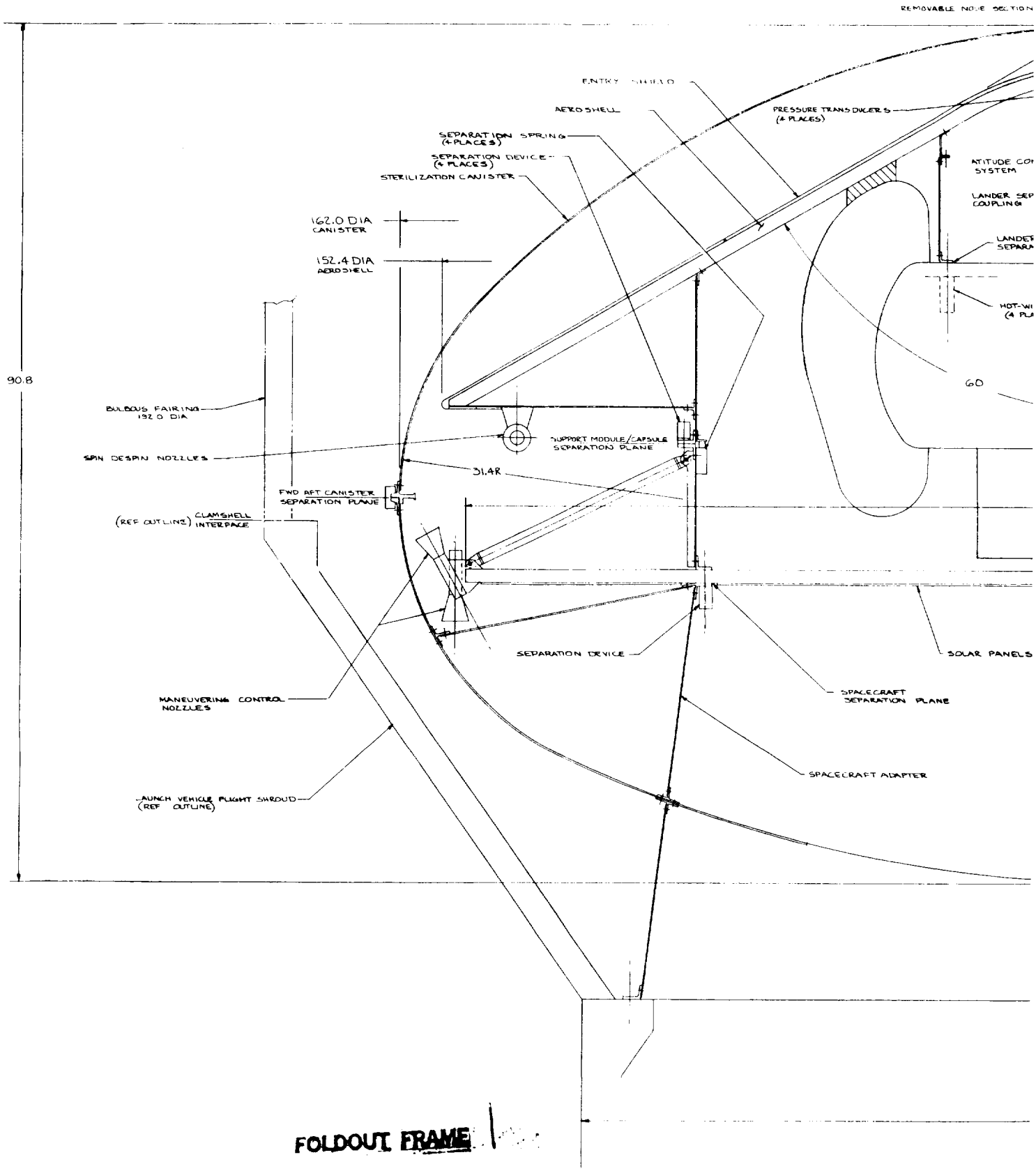

FOLDOUT FRAME 1

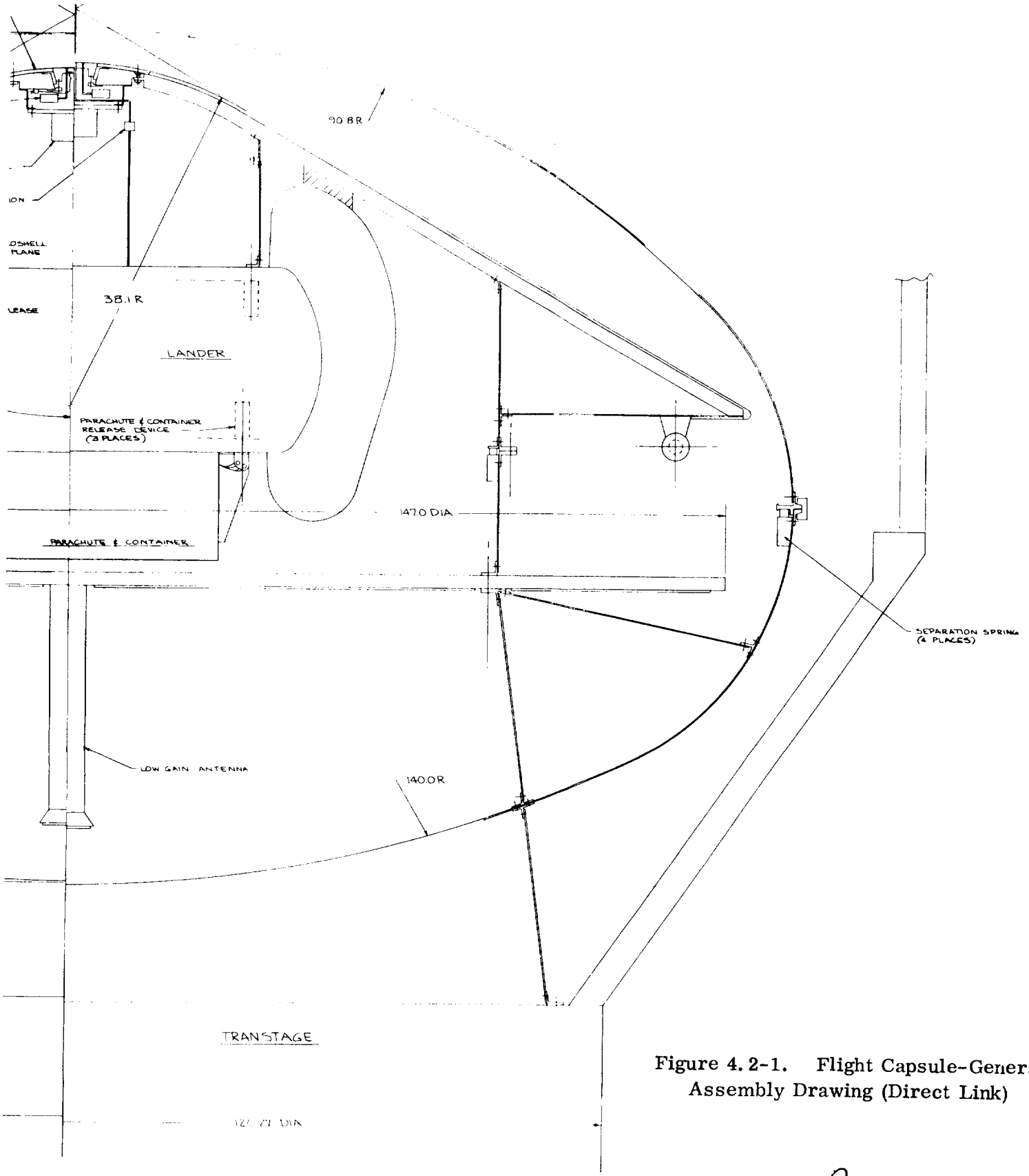

Figure 4.2-1. Flight Capsule-General Assembly Drawing (Direct Link)

FOLDOUT FRAME 2

4.2.3 ENTRY SCIENCE TABULATION

1 mass spectrometer for atmospheric composition measurements

4 pressure sensors for stagnation region pressure

1 temperature sensor for stagnation region temperature

1 base pressure and 1 temperature measurement

1 triaxial accelerometer for deceleration history

1 duct to mass spectrometer for water vapor reading.

4.2.4 LANDED SYSTEM

The Lander of the Autonomous Flight Capsule is equipped to perform surface science operations that include taking surface pictures with two combined low ($\frac{1}{10}$o IFOV) and high ($\frac{1^o}{100}$ IFOV) resolution facsimile cameras. The science measurements are made with a combined gas chromatograph and mass spectrometer, a Wolf Trap type life detection device, pressure and temperature sensors, and a soil sampler. All the entry science instruments, except the pressure and temperature sensors for the stagnation region measurements, are also contained in the landed system. All of the equipment for the surface operations is mounted within a cylindrical, open frame structure. The deployed equipment (two camera-boom assemblies, the high gain S-band antenna and the four solar panel units) are stowed in and deployed from within the main diagonal section of the cylinder. The other science instruments are positioned in a diagonal zone at a right angle to the deployables bay. The operations equipment, the telemetry, communication, sequencing and power equipment are positioned in the quadrants formed by two diagonal bays with a net packaging density of about 30 lb/ft^3. The 129 lb/ft^3 battery when positioned in its bay has a net density of about 69 lb/ft^3.

The cylinder rim is stiffened by a D-section torus that is pre-bonded to the interior of the phenolic glass crush-up material of the impact attenuation structure. The cylinder is joined to the rim and crush-up structure after tests and checkout of the science and operations equipment have been completed. The honeycomb structure of phenolic glass crush-up material has been designed for impacting slopes up to 20° with 5 in. rocks, at speeds of 110 ft/sec horizontal and 100 ft/sec vertical and with a possible 40° maximum sway on the parachute. For these impact conditions, and a limit deceleration of 1000-g, with possible secondary impact of 100 ft/sec, the crush-up material surrounding the equipment cylinder consists of 9.5 in. for the initial impact side and 7.5 in. on the rebound side of the Lander. The equipment is designed for a 90-day surface operation.

Surface telecommunication includes a 20 watt transmitter, and a 24 dB, high gain antenna and a low gain, back up antenna for the S-band communication link to Earth. The entry data is transmitted directly on four antennas using four 100 watt transmitters. The general arrangement and packaging details are given on figs. 4.2-2 and 4.2-3.

4.2.5 SURFACE SCIENCE INSTRUMENTS

2 dual resolution facsimile cameras — Hi resolution $= \frac{1o}{100}$ IFOV

Lo resolution $= \frac{1o}{100}$ IFOV

1 gas chromatograph and mass spectrometer for large particle detection and atmospheric sampling

1 life detection experiment - Wolf Trap

1 soil sampler

2 ambient temperature sensors

2 surface pressure sensors

2 clinometers - Lander orientation measurement.

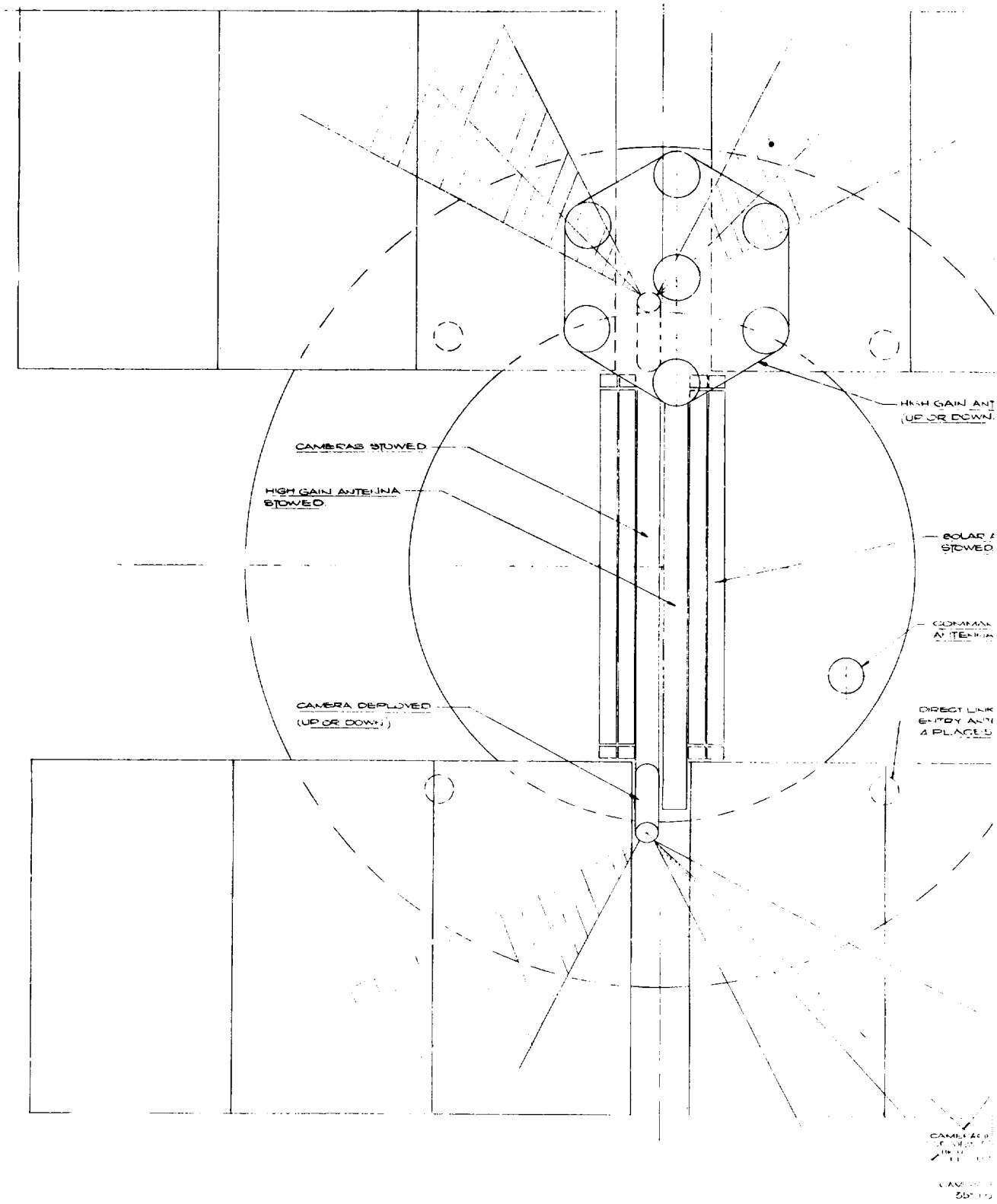

FOLDOUT FRAME 1

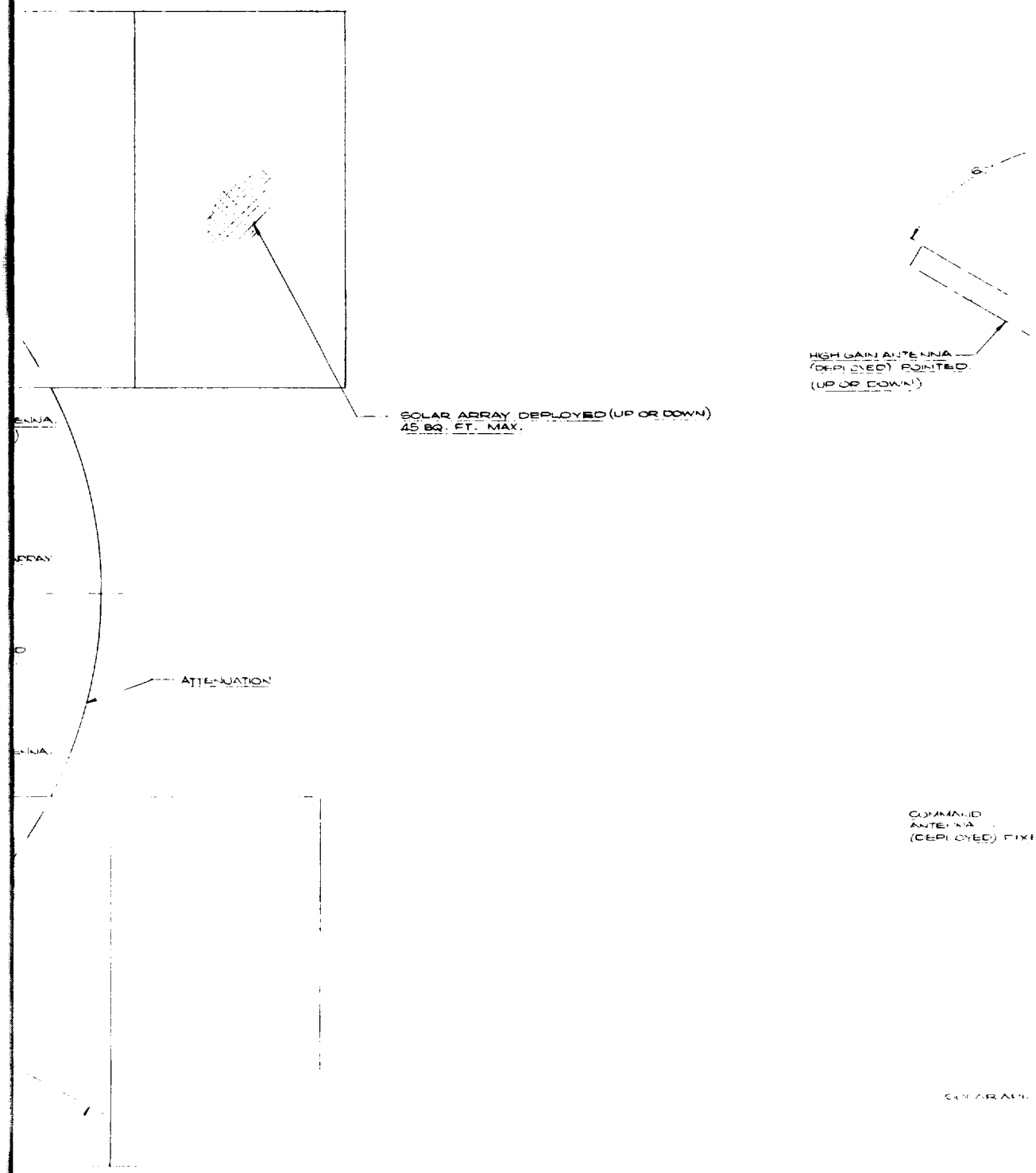

FOLDOUT FRAME 2

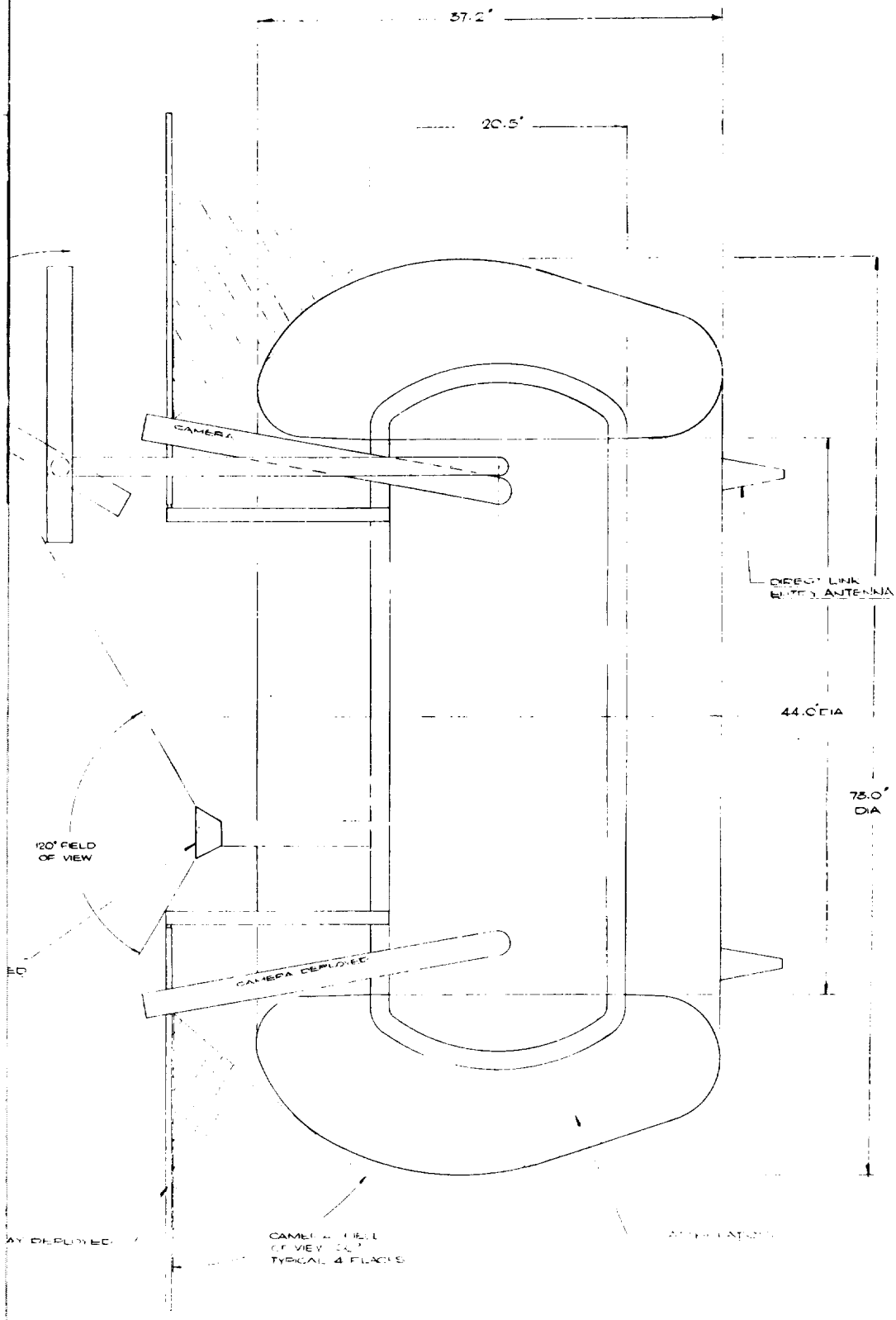

Figure 4.2-2. Lander-General Assembly
(Direct Link)

FOLDOUT FRAME 3

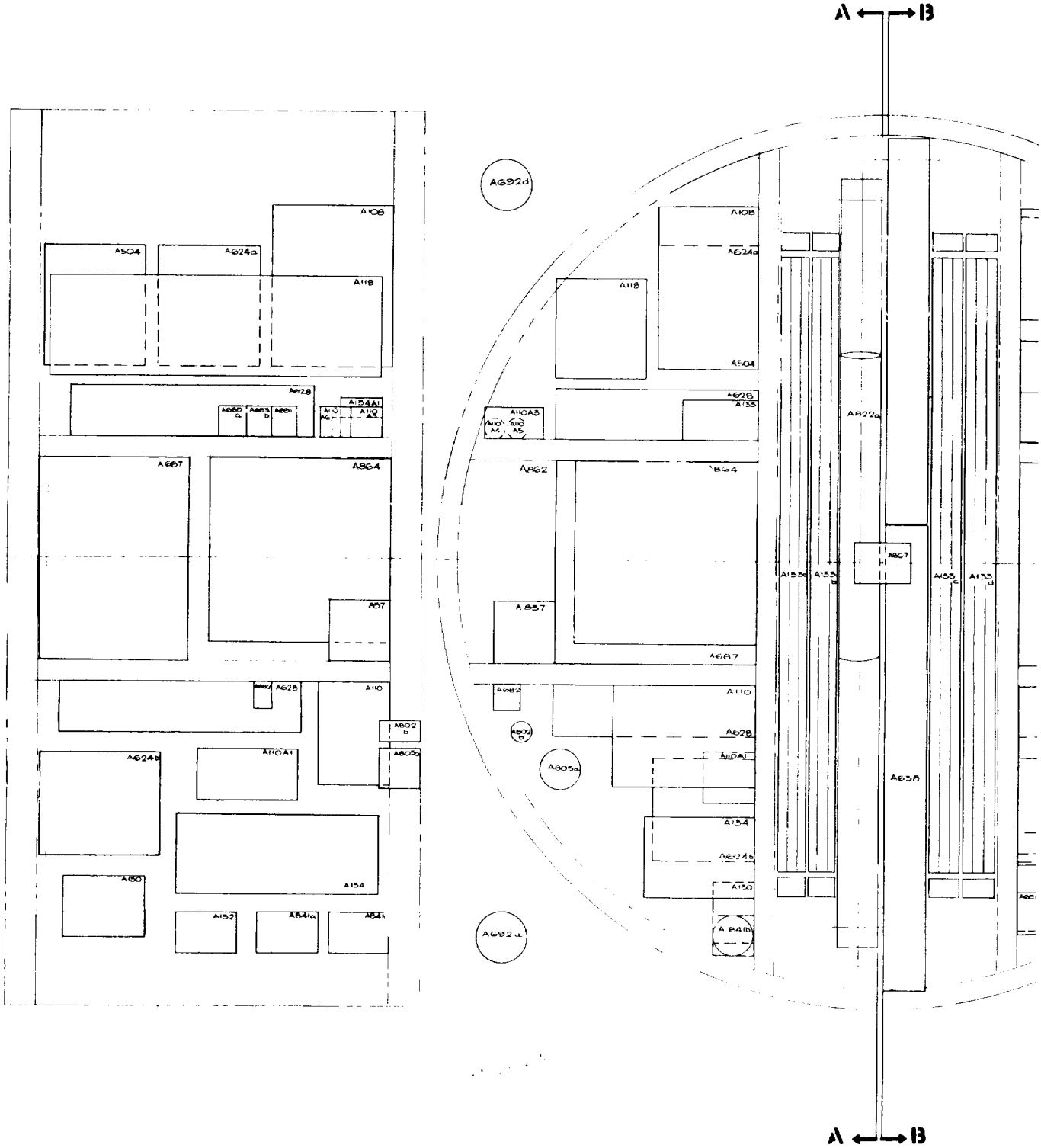

FOLDOUT FRAME 1

REF NO.	COMPONENT
	LANDER SCIENCE
A809a	ATMOSPHERIC PRESS
A809b	ATMOSPHERIC PRESS
A808a	ATMOSPHERIC TEMP
A808b	ATMOSPHERIC TEMP
A822a	CAMERA
A822b	CAMERA
A863	ATMOSHERIC/ ORGANIC COMP
A864	LIFE DETECTION
A862	SOIL SAMPLER
A841a	LANDER ATTITUDE
A841b	LANDER ATTITUDE
	ENTRY SCIENCE
A807	TRI-AXIAL ACCELEROMETER
A802a	RESISTANCE THERMOMETER
A802b	RESISTANCE THERMOMETER
A805a	PRESSURE TRANSDUCER
A805b	PRESSURE TRANSDUCER
A838	MASS SPECTROMETER
A837	MOISTURE SENSOR

REF NO.	COMPONENT
	ELECTRICAL POWER EQUIPMENT
A101	BATTERY OPERATIONAL
A118	BATTERY OPERATIONAL
A110A1	SWITCH POWER TRANSFER
501	PROGRAMMER LANDER
A108	REGULATOR VOLTAGE
A110	CONTROLLER POWER
A132	UNIT BRKT + LIMITER
A133a	PANEL SOLAR CELL
A133b	PANEL SOLAR CELL
A110A3	MODULE DIODE BLOCK
A110A6	MODULE THERMAL RELAY
A110 A4	SWITCH HG "A"
A110A5	SWITCH HG "B"
A154	REGULATOR CHARGE
A154A1	MODULE DIODE BLOCK

REF NO	COMPONENT
[illegible]	MOTOR [illegible]
[illegible]	MOTOR [illegible]
[illegible]	PANEL SOLAR CELL
	THERMAL CONTROL SUBSYSTEM
A706	ELEMENT TEMP DETECTOR
A707	UNIT TEMP CONTROL
	INSULATION
	HARNESSES
WOL1	CABLE ASSY COMMAND
WOL2	CABLE ASSY POWER
WOL3	CABLE ASSY INSTR
WOL4	CABLE ASSY SHLD
WOL5	CABLE ASSY POWER
WOL6	CABLE COAXIAL

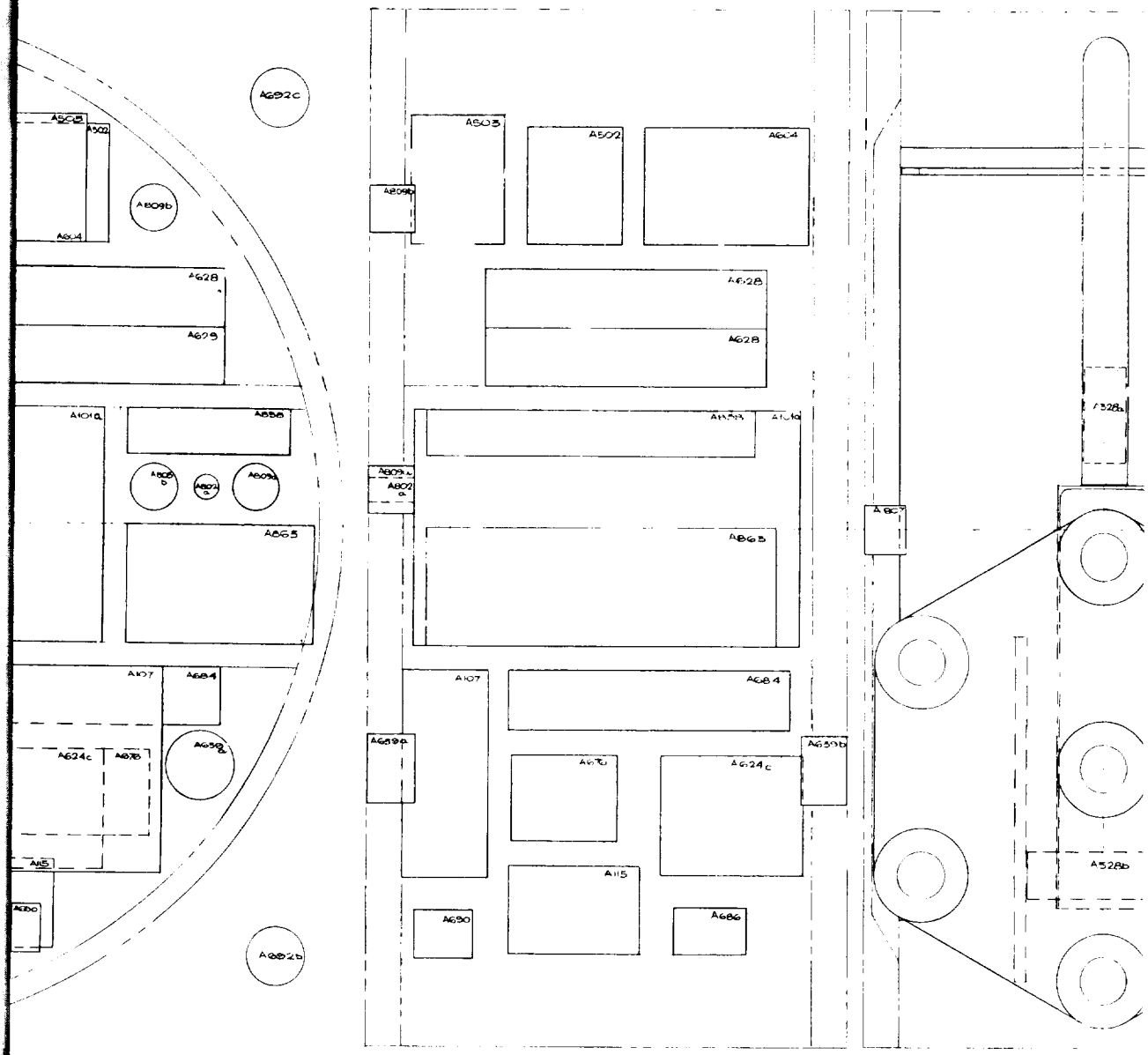

SECTION 13

FOLDOUT FRAME 2

REF NO.	COMPONENT
	TELECOMUNICATIONS
A604	CONDITIONER SIGNAL DATA
A5[illegible]	MEMORY UNIT
A602	PROCESR DATA HANDLG
A606	MULTICODER
A682	ACCELEROMETER IMPACT
A691	CIRCULATOR
A628	TRANSMITTER S-BAND
[illegible]	REGEIVER COMMAND
A686	COMMAND DETECTOR
A684	TRANSMITTER
A504	DECODER COMMAND
A624a	EXCITER
A624b	EXCITER
A624c	EXCITER
A639a	ANTENNA S-BAND "A" REC
A639b	ANTENNA S-BAND "B" REC
A690	CIRCULATOR S-BAND
A692a	ANTENNA, DIRECT LINK, ENTRY

REF NO.	COMPONENT
A692b	ANTENNA DIRECT LINK ENTRY
A692c	ANTENNA DIRECT LINK ENTRY
A692d	ANTENNA DIRECT LINK ENTRY
A689a	AMPLIFIER CHARGE
A689b	AMPLIFIER CHARGE
A638	ANTENNA S-BAND
	ELECTRICAL INTERFACE EQUIP
J2002	IFD AEROSHELL-LANDER
J2003	IFD SUPPORT MODULE-LANDER

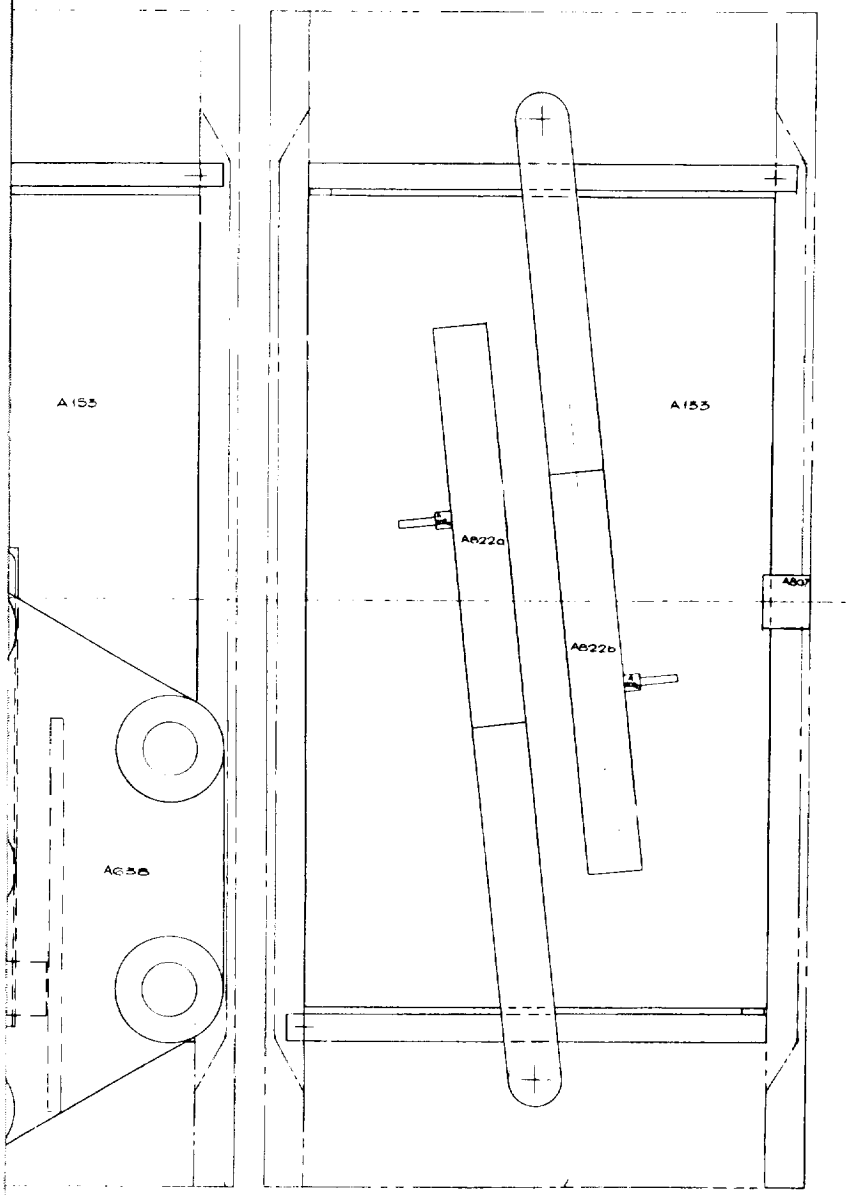

-13

SECTION A-A

FOLDOUT FRAME 3

Figure 4.2-3. Lander Layout of Components (Direct Link)

4.3 DIRECT ENTRY LANDER WITH DEFLECTED RELAY SUPPORT MODULE

In this Spacecraft design concept (fig. 4.3-1), the Support Module is separated from the Entry Vehicle and is deflected from the impact trajectory to a flyby trajectory. The module then serves the Entry Vehicle as a relay link for the entry data collected and for low bit surface science experiments conducted before the flyby is over the Lander horizon. (Imaging from surface is not possible because the sterilization requirement precludes using a tape recorder for data storage*.) As in the Truly Autonomous concept, both the Support Module and the Entry Vehicle are sterilized, the forward canister is removed before leaving the Earth orbit and the Spacecraft separated from the Titan Transtage after injection into a flyby trajectory. The spin-stabilize Spacecraft is then maneuvered to an impact trajectory. The Spacecraft axis is pointed to Earth for the communication link.

The Lander system (fig. 4.3-2) contains the same entry (13 lb) and surface science equipment (36 lb) as the Autonomous design, but weighs considerably less because the direct to Earth entry transmission system has been deleted and only 25 ft^2 of solar array is required compared to 40 ft^2. In this mission concept, the landing site is in the northern hemisphere because Earth visibility at landing is not required since the Support Module is available to relay entry and landing data to Earth. With the Sun in the northern hemisphere, the solar panels required of this Lander are smaller. A further weight reduction is available because of the lower weight attenuation material and structure required by the lighter Lander system.

The lighter Lander permits an 11.4 ft diameter aeroshell as compared to the 12.7 ft diameter required of the Autonomous Capsule.

The design approach to the entry system is the same as described for the Autonomous with the exception of a smaller base diameter aeroshell and smaller encapsulating canister (158.5 in. outside diameter compared to 162 in. for the Autonomous). The entry and landing conditions were the same.....

- Entry path angle 25° nominal -9°, $+7^o$
- Entry velocity 20,800 ft/sec
- Mars model atmosphere VM-1, VM-10
- Touchdown winds 110 ft/sec, 20° slopes, 5 in. rocks

The Lander design is given on fig. 4.3-2 and is identical in the approach to packaging (fig. 4.2-3) the science and the operations equipment, deploying the high gain S-band antenna, fig. 4.3-3, the four solar panels, fig. 4.3-4 and the two facsimile cameras, fig. 4.3-5.

---

*Small quantity (below 10^7 minimum) could be relayed real time.

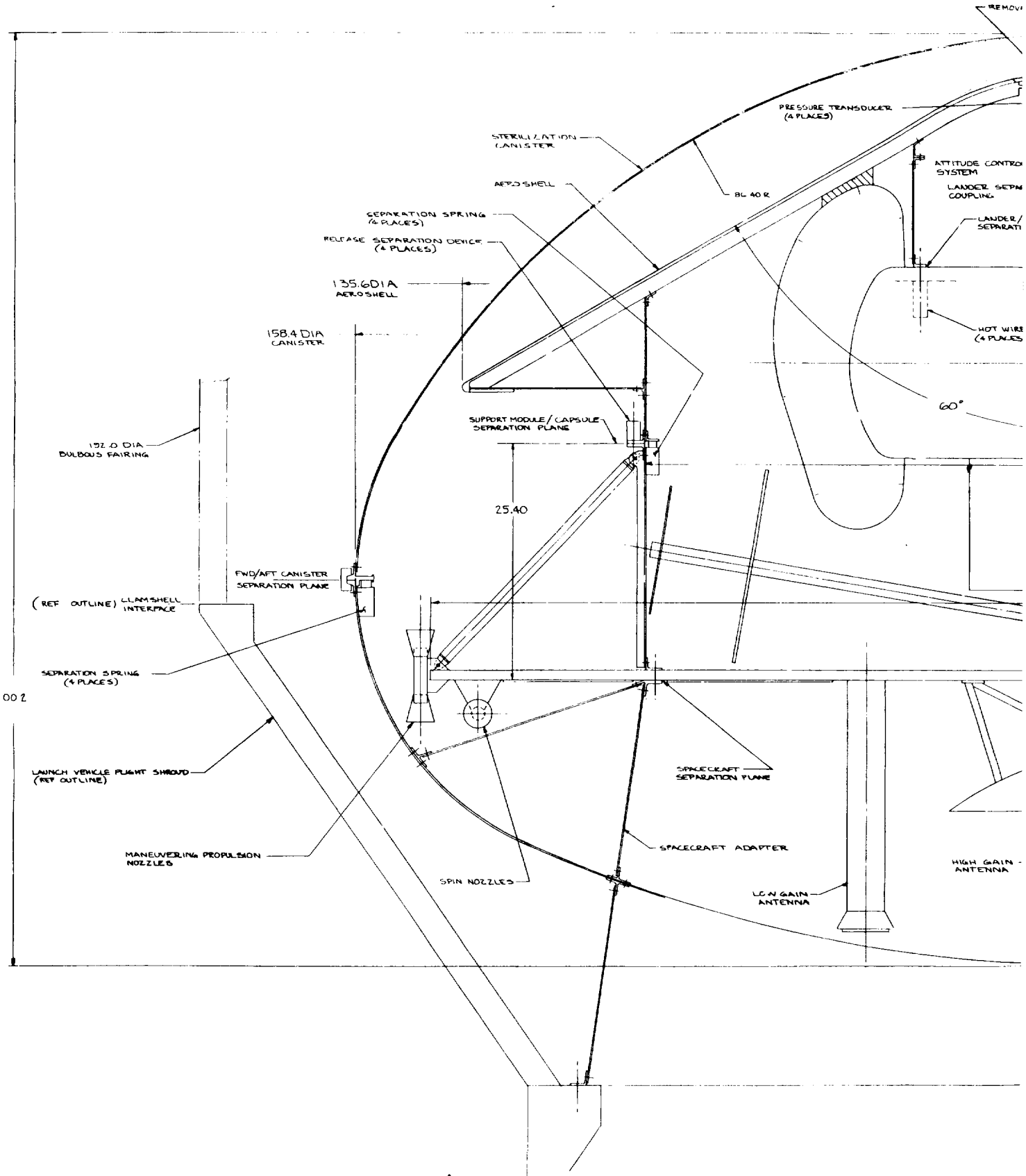

FOLDOUT FRAME 1

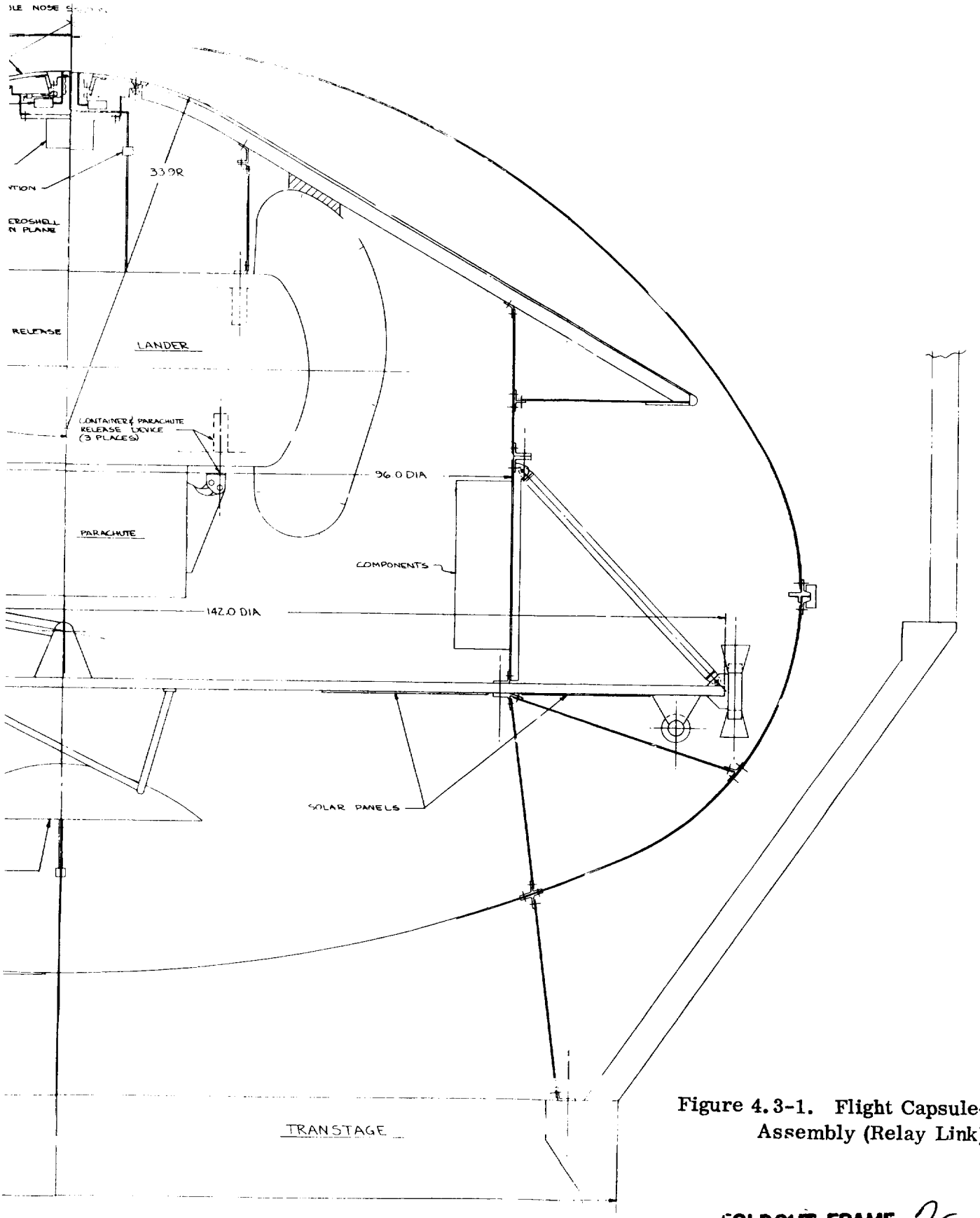

Figure 4.3-1. Flight Capsule-General Assembly (Relay Link)

FOLDOUT FRAME 2

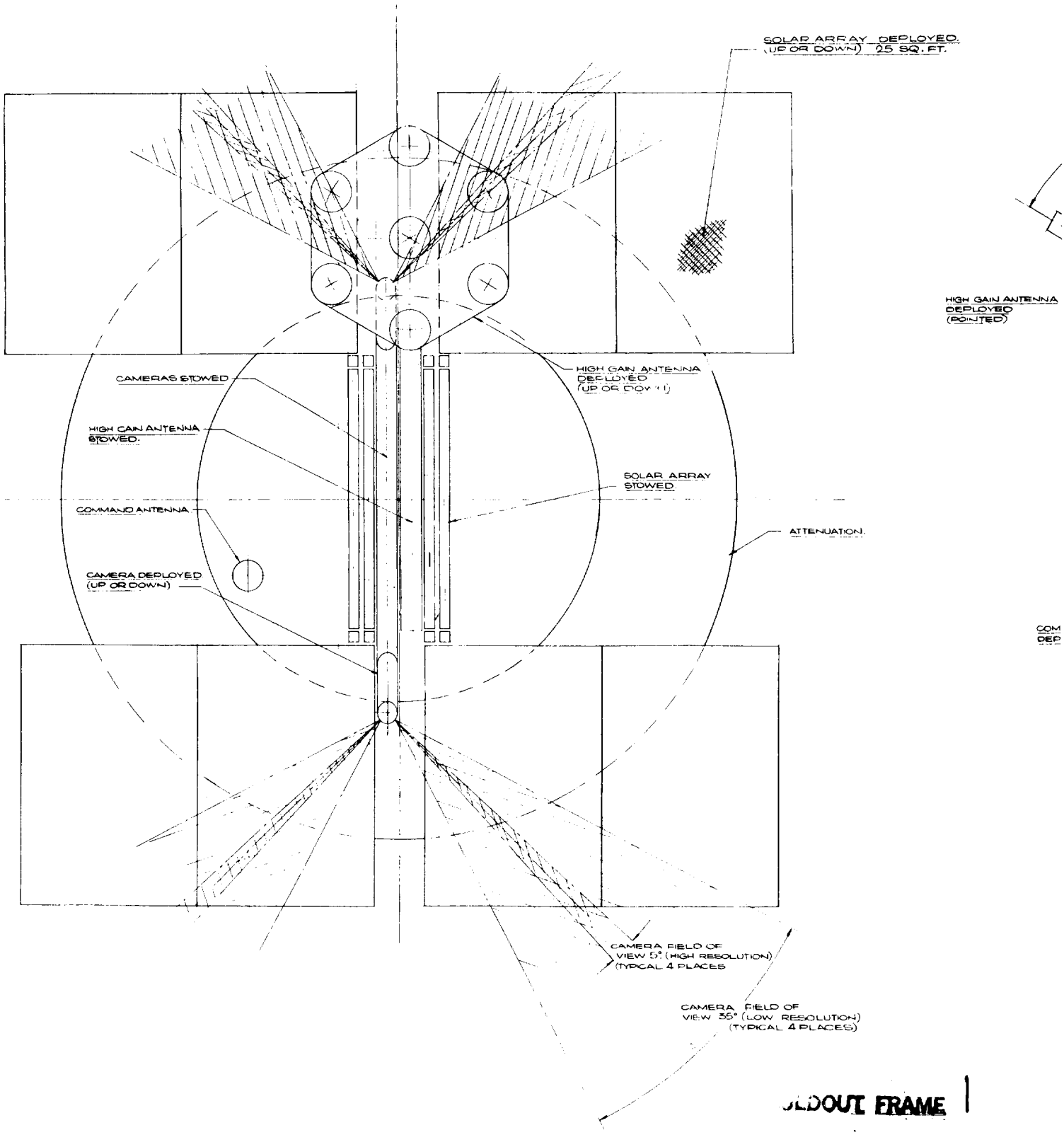

FOLDOUT FRAME 1

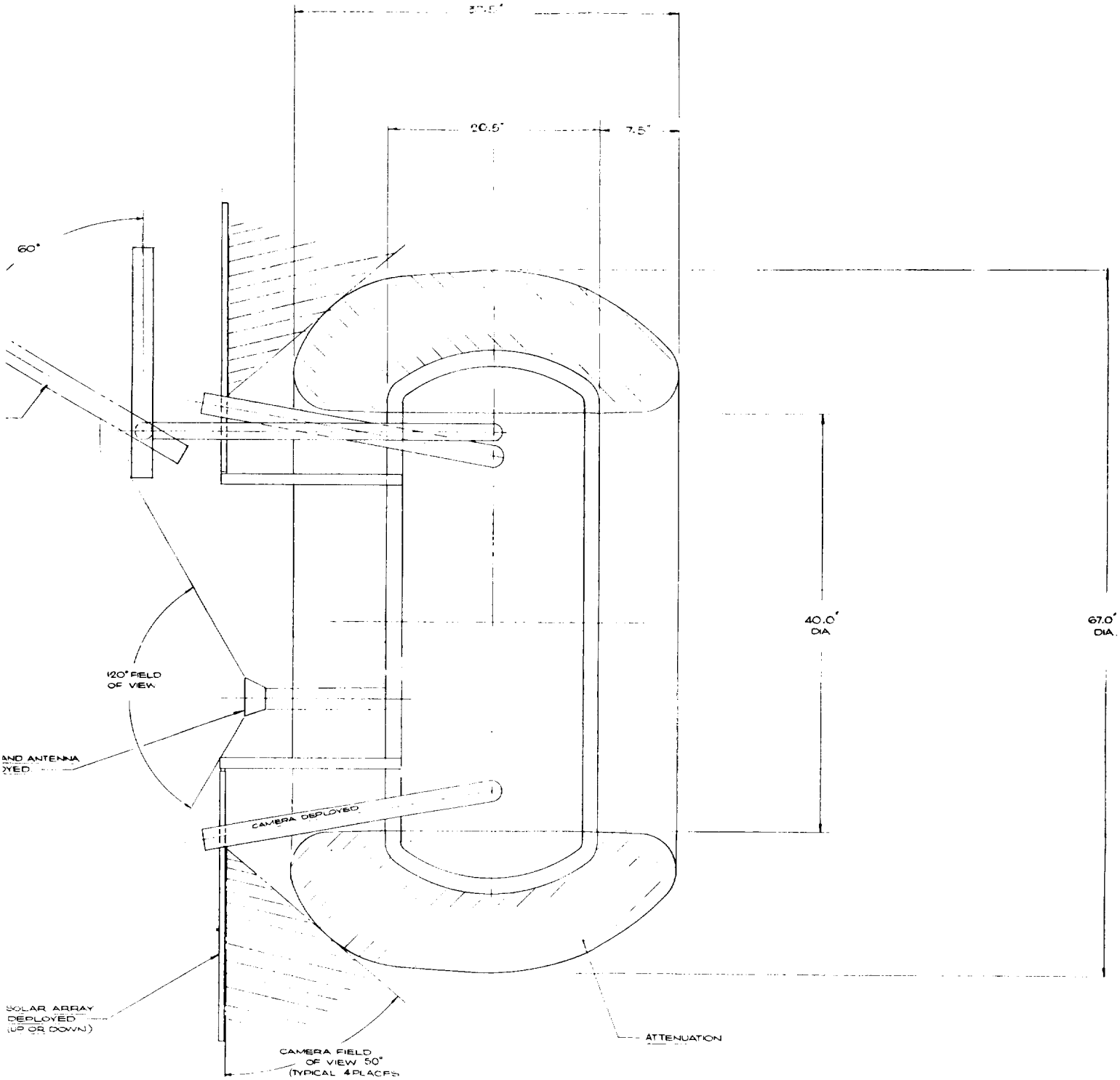

Figure 4.3-2. Lander-General Assembly (Relay Link)

FOLDOUT FRAME 2

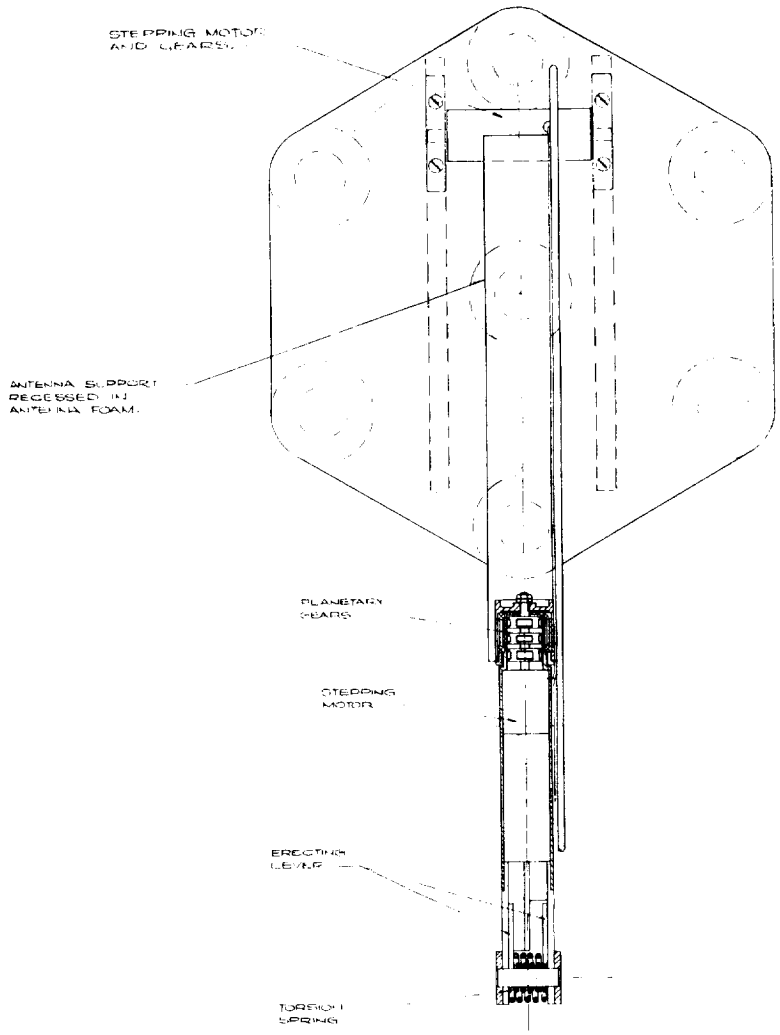

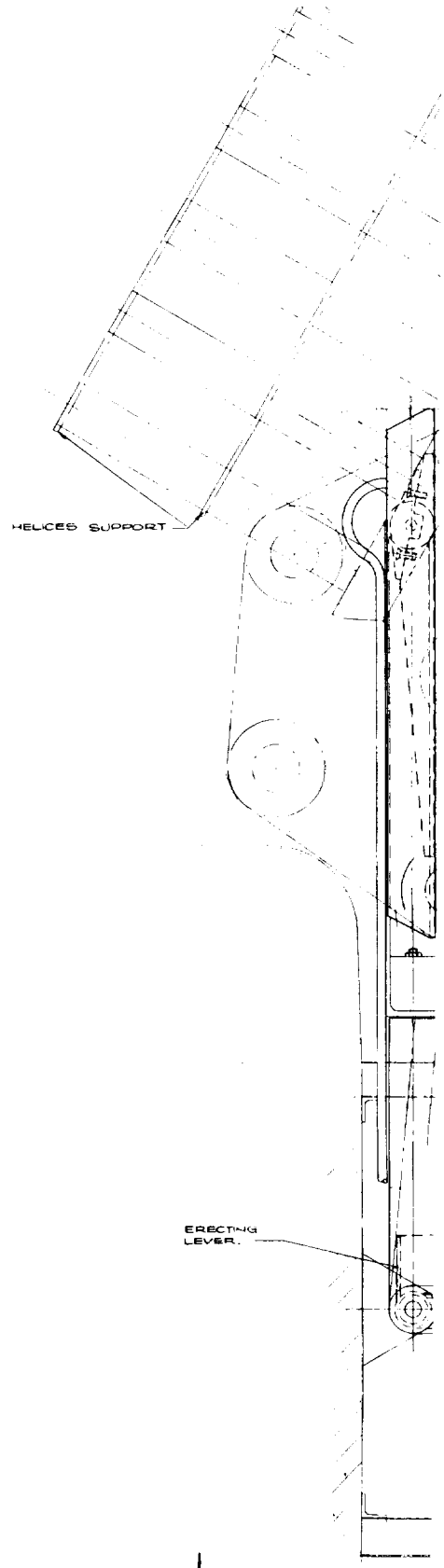

FOLDOUT FRAME 1

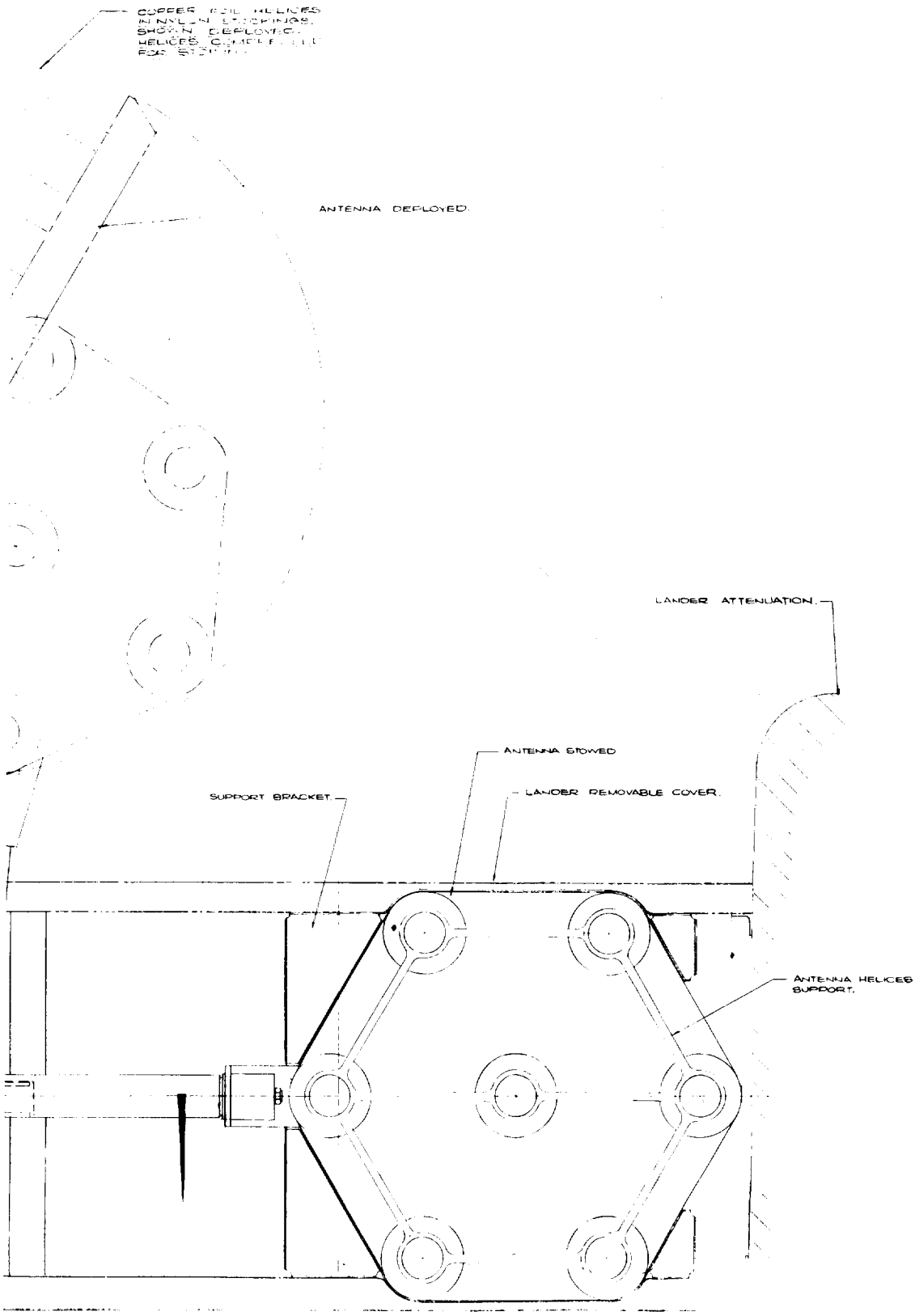

FOLDOUT FRAME 2

Figure 4.3-3. High Gain S-band Deployment Details

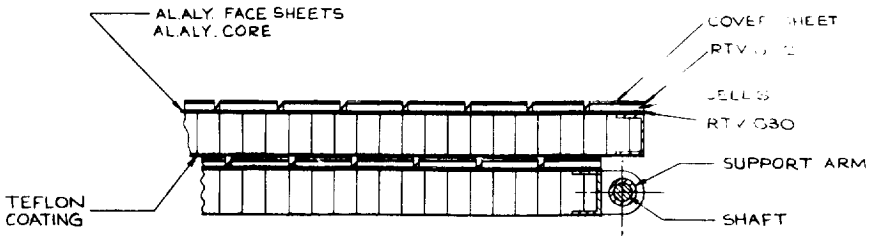

SECTION D-D (SCALE 2/1)

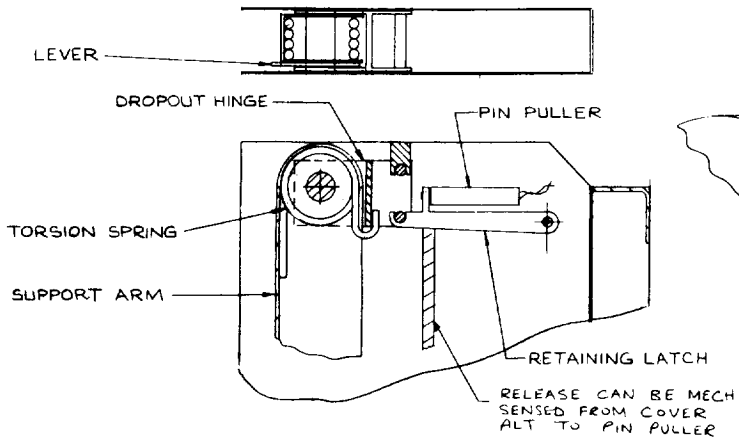

DETAIL C (ALTERNATIVE DESIGN)

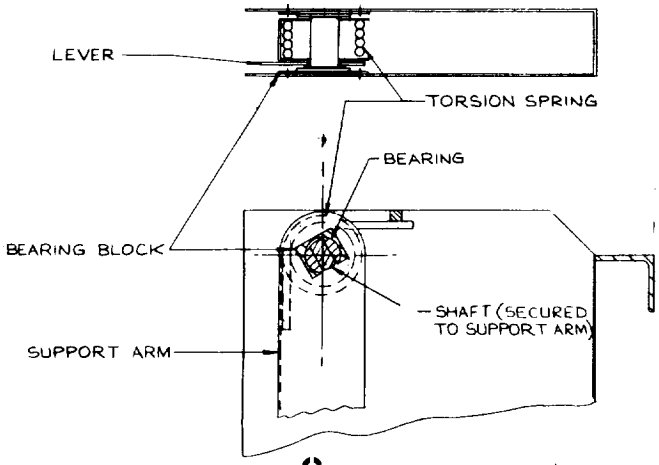

DETAIL C (PROPOSED DESIGN)

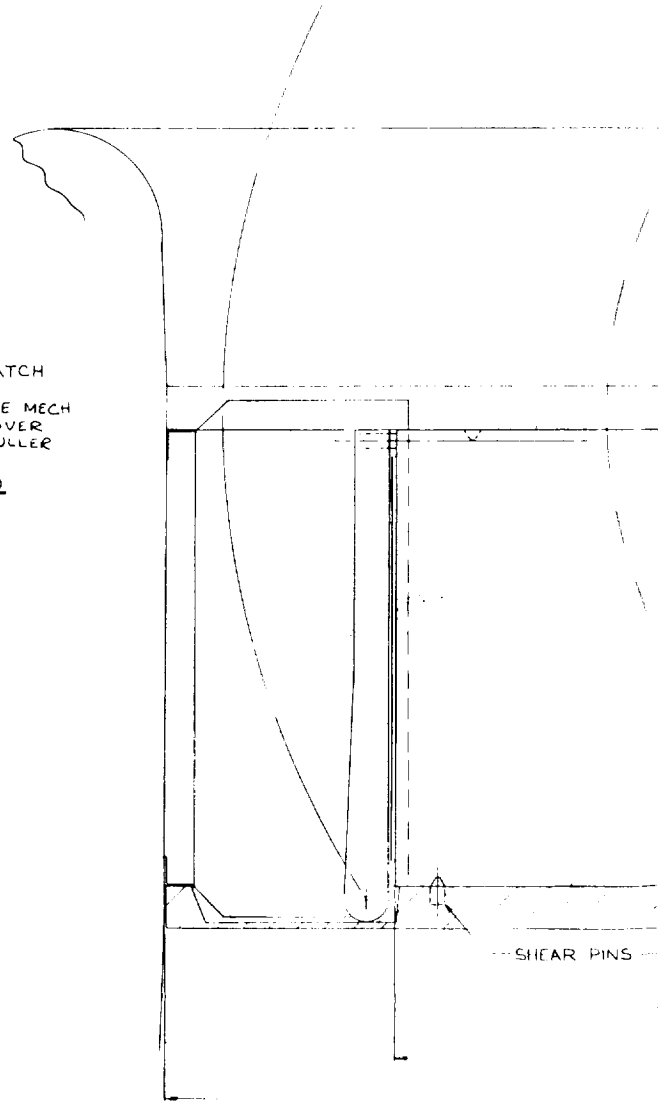

FOLDOUT FRAME 1

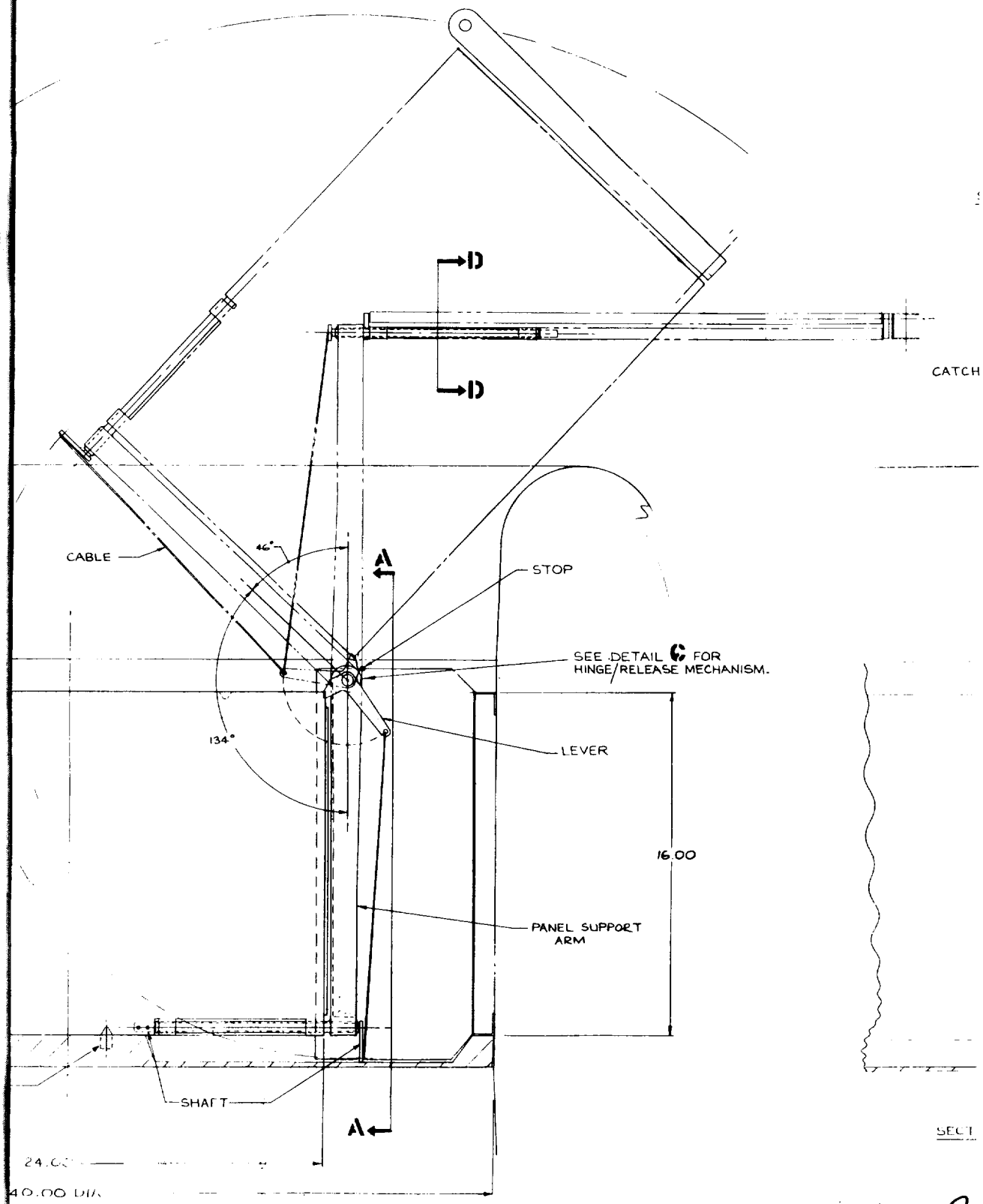

FOLDOUT FRAME 2

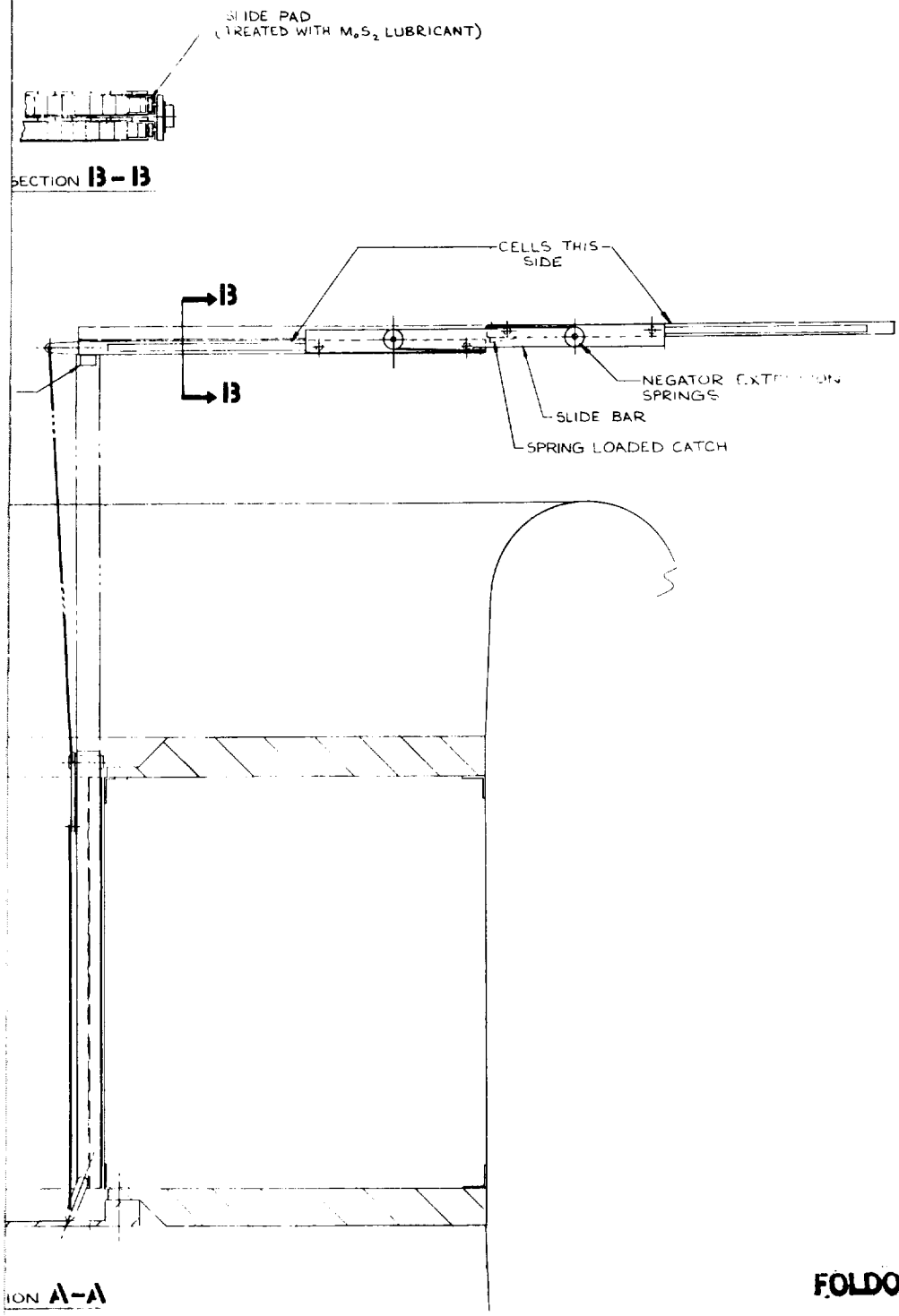

FOLDOUT FRAME 3

Figure 4.3-4. Solar Panel Array Deployment Details

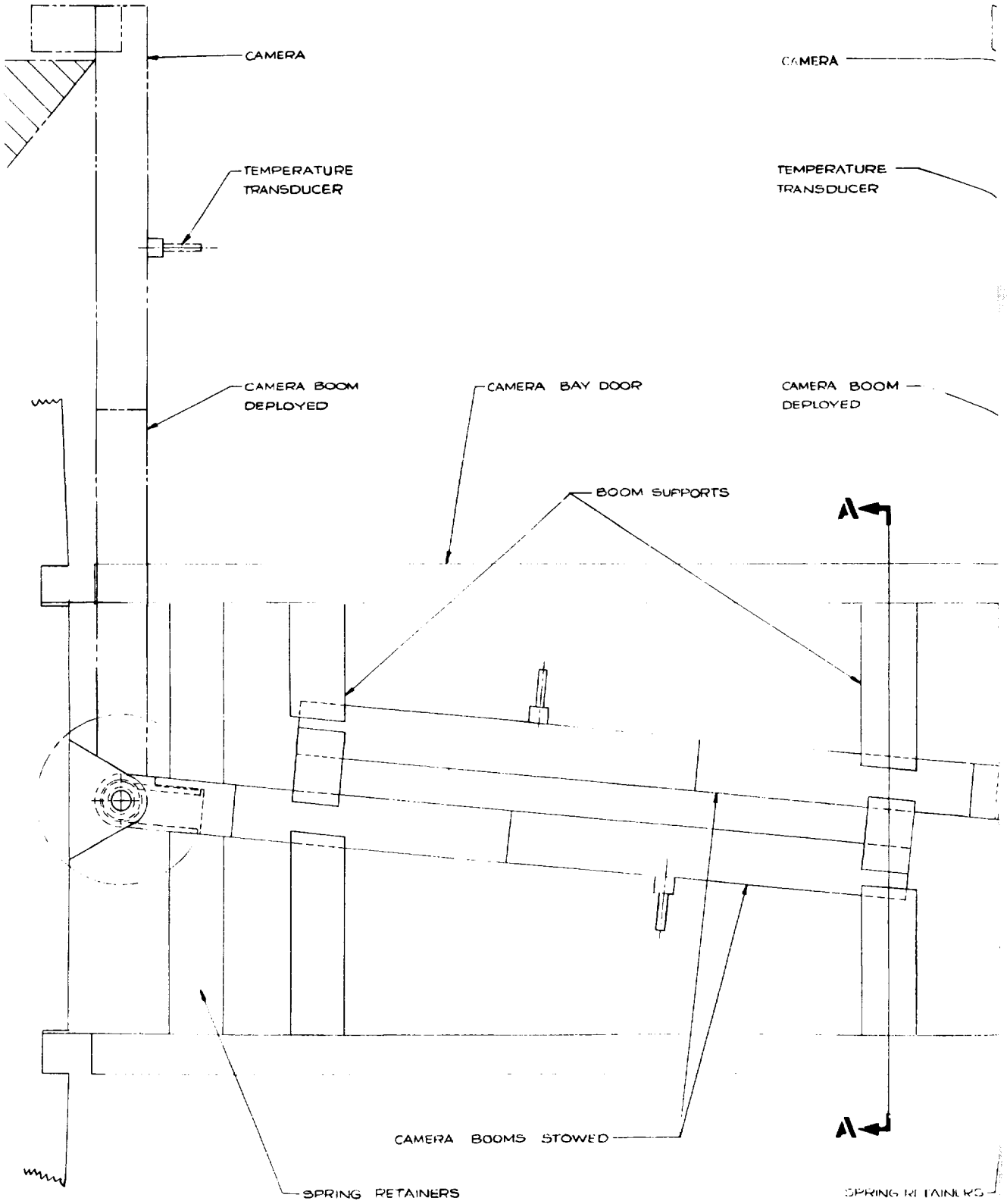

FOLDOUT FRAME 1

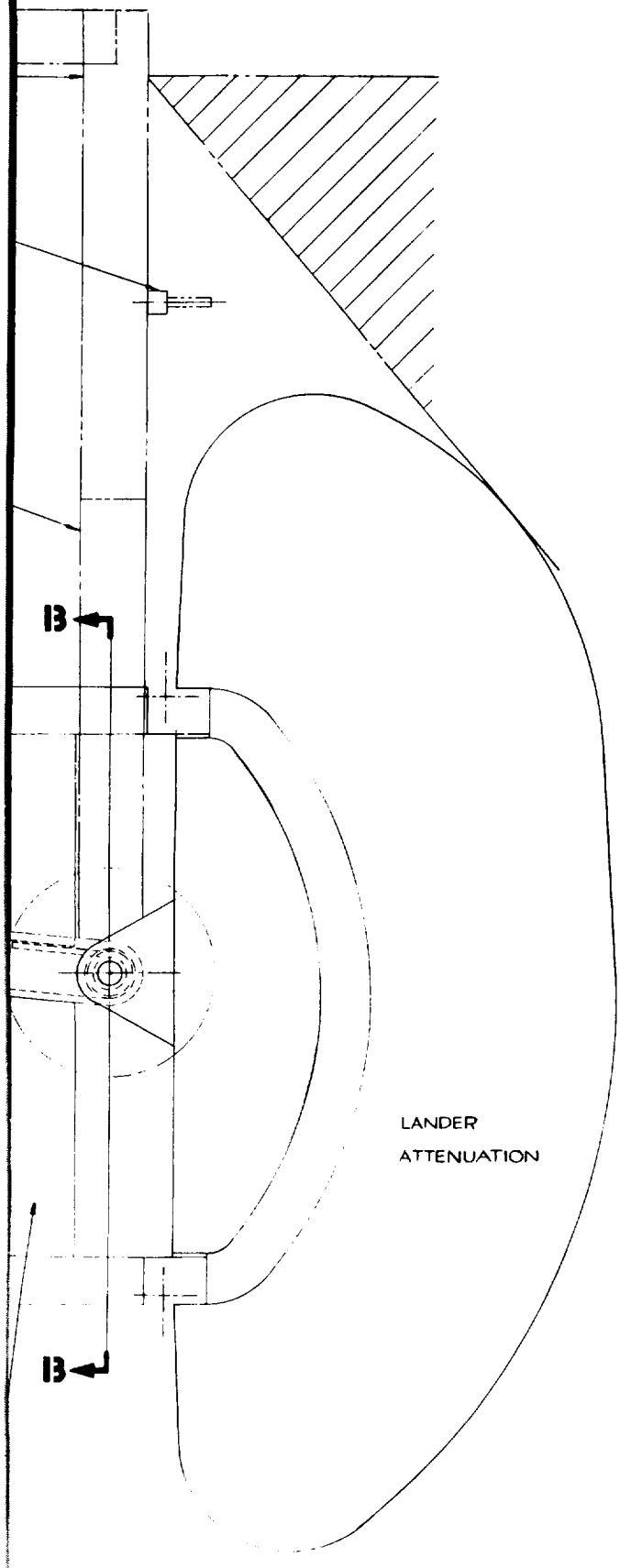

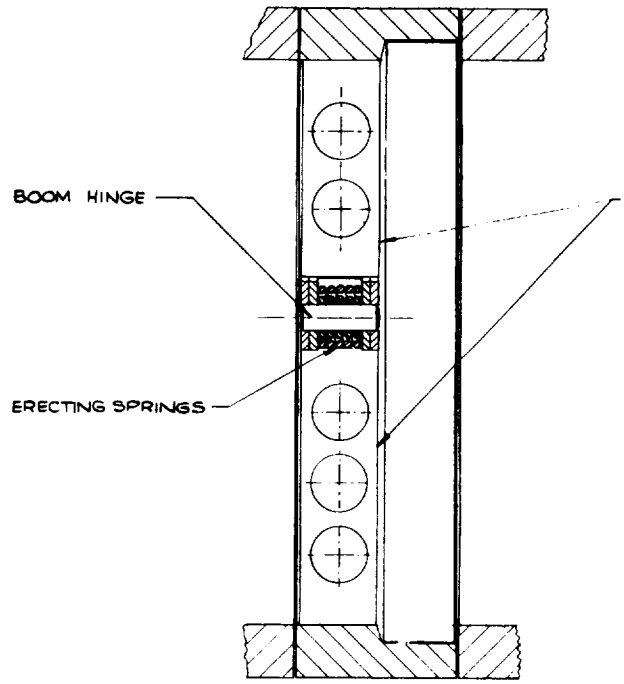

SECTION 13-13

FOLDOUT FRAME 2

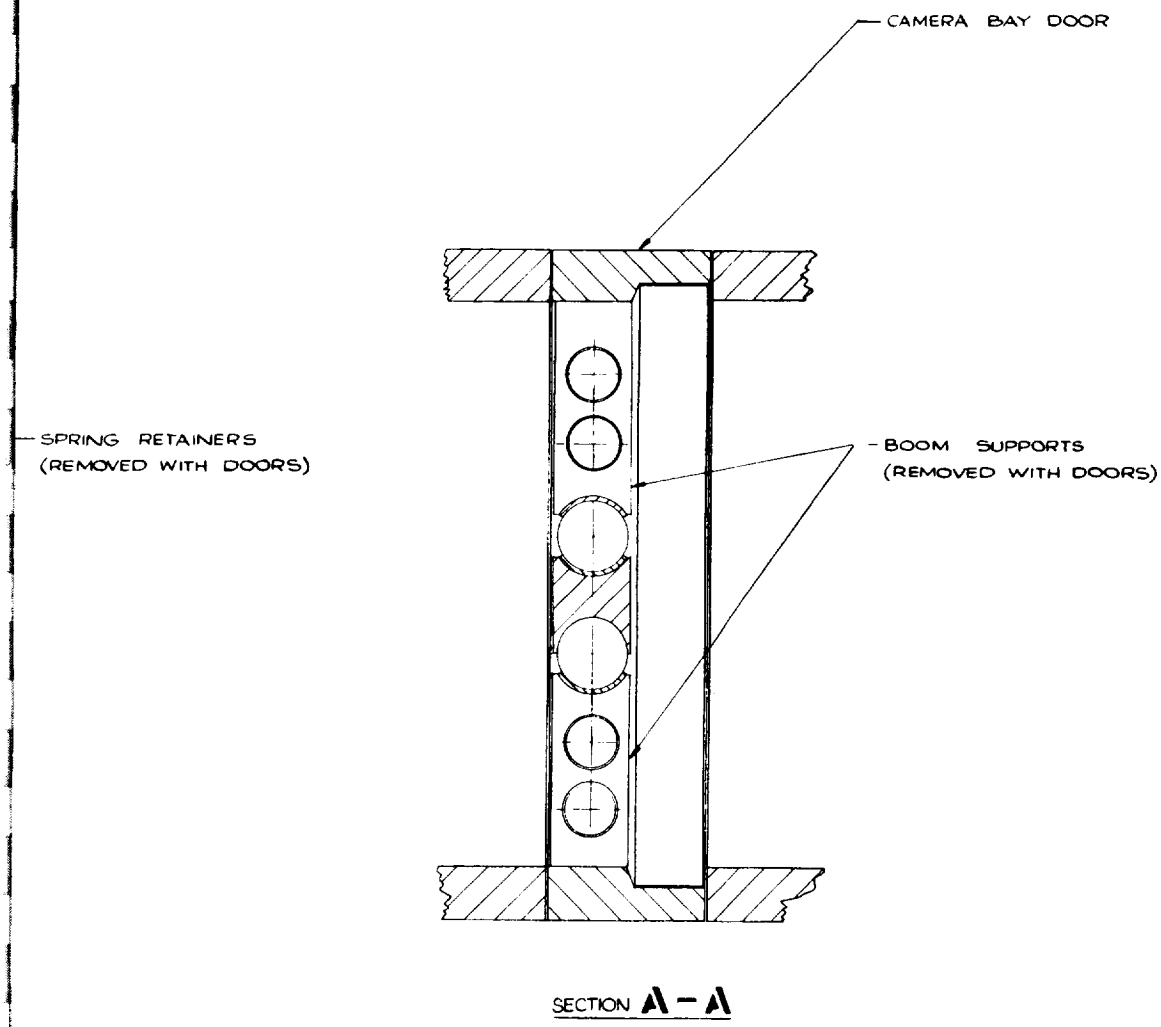

Figure 4.3-5. Camera Deployment Details

FOLDOUT FRAME 3

4.4 LANDER EQUIPMENT DEPLOYMENT

In the landed position, either surface of the vehicle may be uppermost, so provision has been made for the deployment of instruments and equipment from either surface of the flat pack container. However, to avoid unnecessary duplication of instruments, the actuating mechanisms have been designed for two-way operation. A g-sensing device will determine the direction of deployment.

Instruments deployed from the flat pack container of the Autonomous Capsule are the following: two cameras, one antenna, two temperature transducers, a wind velocity instrument, and a soil sampler. Except for the soil sampler, all of these instruments are deployed from the central bay of the flat pack container.

4.4.1 SOLAR PANEL ARRANGEMENT, STOWED CONFIGURATION, AND DEPLOYMENT SEQUENCE

The Lander solar panel assembly is sketched in fig. 4.4-1, which shows the panel assembly stowed in the Lander and also deployed into its fully extended position. The panel assembly consists of four sets of double aluminum honeycomb sandwich panels, which are stowed in a vertical position in separate compartments along the sides of the central bay of the Lander, which also houses deployable instrument booms. Prior to removal, the covers on the top and bottom surfaces of the Lander provide continuous structural support along the edges of the panels, thus minimizing inertia loads imposed on the pins and mechanisms used during panel deployment. In addition, sideways precompression contributes to reduction of support loads and increases the natural frequency of the stowed array. The packaging arrangement retains the feature of deployment through either surface of the Lander.

As indicated in fig. 4.4-1, the panels, when deployed, clear the crushable fiberglass honeycomb impact attenuator and do not interfere with the central space required for the instrument booms. Each set of panels is independently actuated, so that if damage to the Lander prevents one set from deploying, it will be possible to deploy the others.

The deployment sequence is illustrated in fig. 4.4-2. Fig. 4.4-2a shows two sets of double panels side by side along one side of the storage bay. At each end of each set of panels is a panel support arm attached to the panels and pinned to the Lander. On the front set, the near arm is pinned at the bottom and the far arm at the top, the reverse arrangement being used on the rear set of panels. This scheme allows deployment through either surface of the Lander. Deployment is initiated on command from Earth or by stored command. The pin not required for motion is automatically disconnected by cover removal, and each set of double panels automatically swings in its plane, as indicated in fig. 4.4-2b, actuated by a coiled torsion spring. The unpinned support arm remains with the panels. When the panels have rotated through an angle of 134°, a set of levers comes into operation to move the double panels to a horizontal

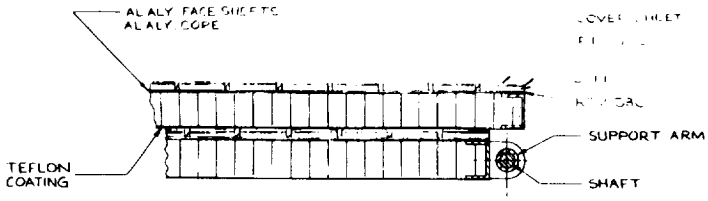

SECTION D-D (SCALE 2/1)

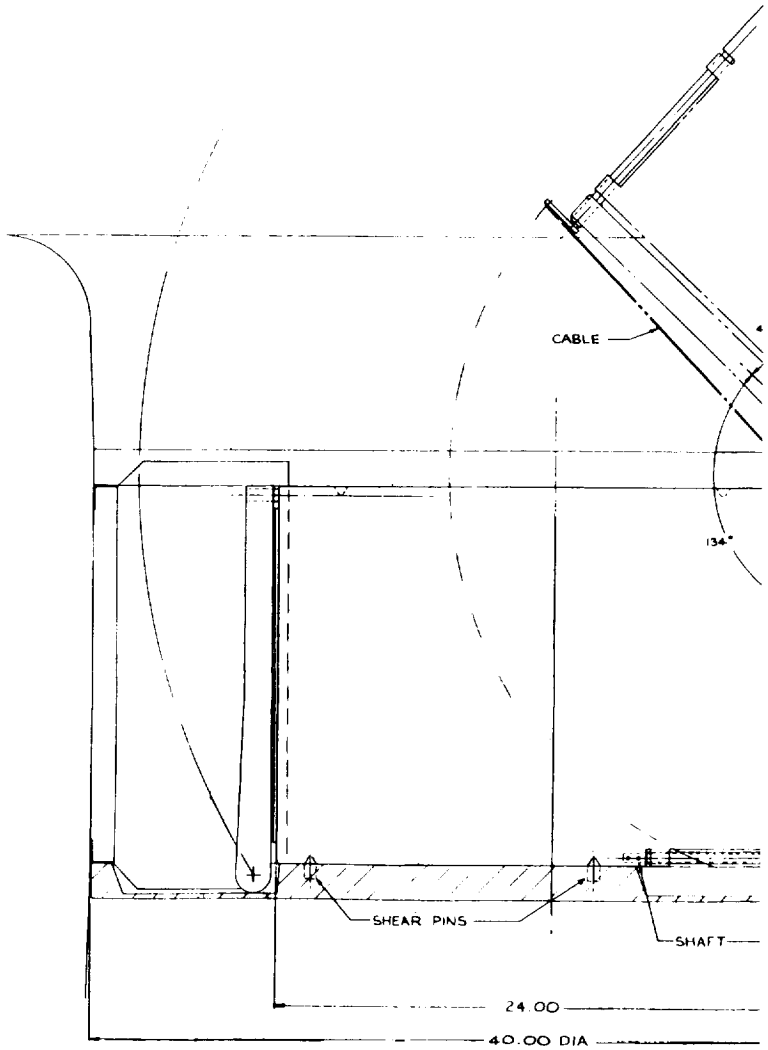

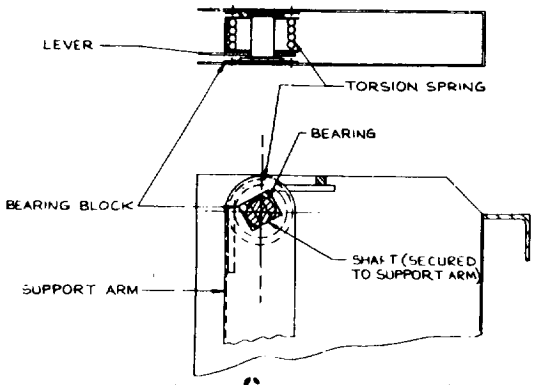

DETAIL C (PROPOSED DESIGN)

FOLDOUT FRAME

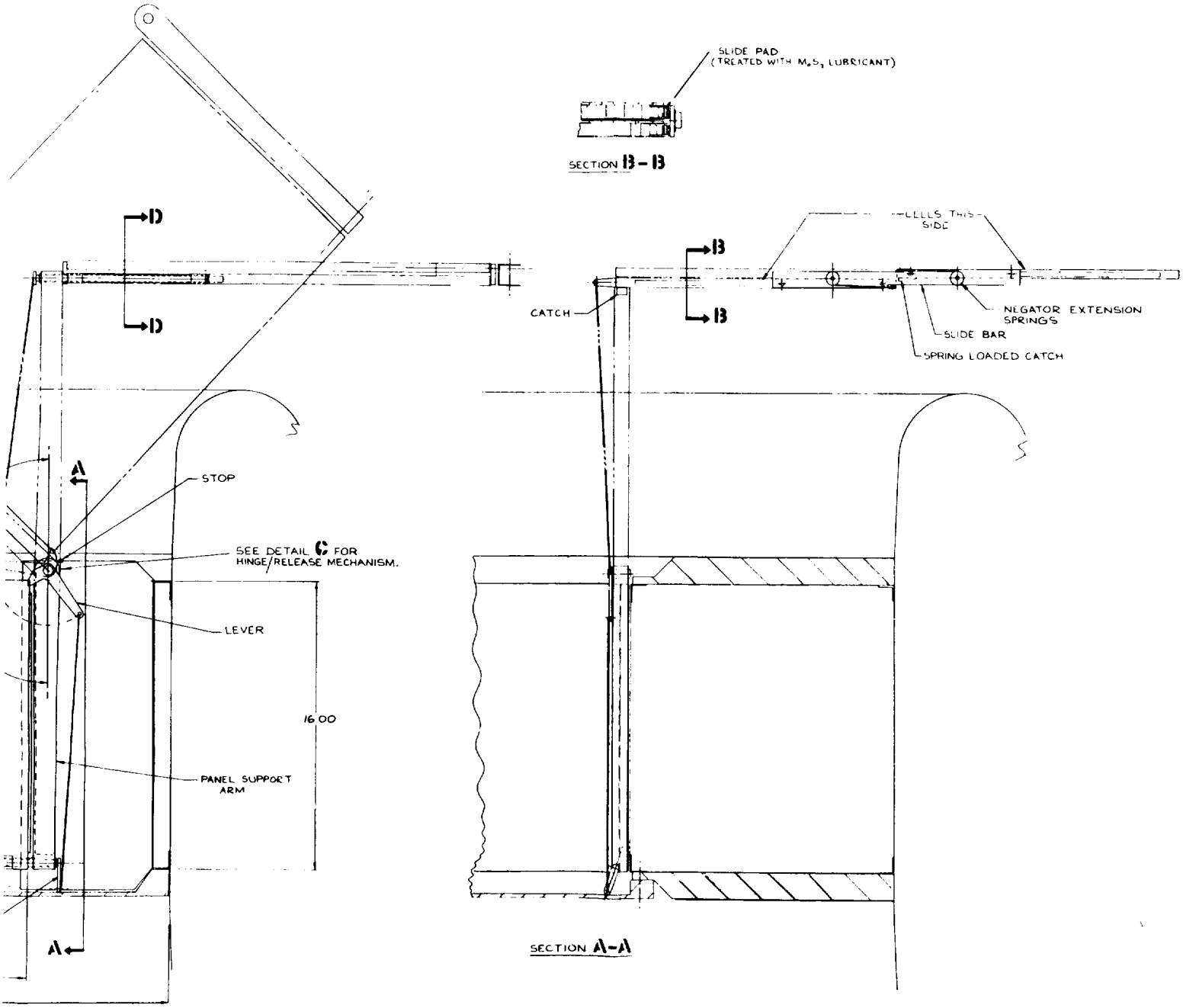

Figure 4.4-3. Proposed Solar Panel Structure and Mechanisms Details

FOLDOUT FRAME 2

position while the torsion spring continues to move the support arm through another 46° (see fig. 4.4-2c). This combination of motions is required to prevent the panels from colliding with the fiberglass honeycomb impact attenuator (see fig. 4.4-1). When the support arm has moved through 180°, a latch connecting the two panels is released which, in turn, releases holding springs. This causes the upper panel to slide relative to the lower, as indicated in fig. 4.4-2d, after which a latch prevents return motion. In its final position, the double panel is supported at one corner on the panel support arm.

4.2.1.1 Design of Mechanisms

The solar panel assemblies stowed on each side of the Lander central bay are supported in such a manner that panel inertia loads are not transmitted to the mechanisms. Hence, the design of the mechanisms is based on the loads required to erect the assembly and support it in the fully extended position, and the inertia loads of the mechanisms themselves. The total mechanism may be divided into the parts which perform the following steps of erection and deployment:

1. Support release
2. Support arm rotation
3. Panel rotation
4. Panel extension.

4.4.1.1.1 Support Release Mechanism

Before the panel assembly can be deployed through the upper surface of the Lander by rotation about the upper panel support, the support at the diagonally opposite corner must be released. The proposed design for accomplishing release is shown in fig. 4.4-3, Detail C. Flats machined into the ends of the support spindle fit into a movable bearing, which is held inside a bearing block. For the condition shown in the figure, the spindle would move out of the movable bearing if the panel rotates above the diagonally opposite corner. This rotation is prevented by the Lander cover, which presses down on the upper edge of the panel. Once the cover is removed, however, such rotation will occur, and the lower spindle will clear the block, as described above. The spindle at the axis of rotation cannot clear its block, however, since even a slight rotation will lock the spindle and the movable bearing inside the block. A desirable feature of this design is that it does not require the removal of pins to release the corner of the panel.

4.4.1.1.2 Support Arm Erection

Rotation of the panel support arm through a total angle of 180° from its stowed position is accomplished by means of a torsion spring mounted on the spindle at the corner of the panel. The energy stored in the spring must be sufficient, not only to rotate the support arm, but also to rotate the double panels. In order to avoid creep caused by the long times involved in the Mars mission, the spring must be designed for reduced stresses.

When the support arm reaches the end of its rotation, a latch engages the arm, preventing any additional motion. Once latching has been accomplished, any subsequent loads applied to the panel assembly are reacted by the latch and not the torsion spring.

4.4.1.1.3 Rotation of Panel Assembly About Support Arm

After the support arm has rotated through an angle of 134° (see fig. 4.4-3), the panels start to rotate relative to the arm so that, by the time the arm has rotated through an additional 46°, the panels are at 90° to the initial deployment plane. This combination of motions is required to enable the panels to clear the impact attenuator surrounding the Lander. The 90° rotation of the panels is accomplished by means of a tension link to a panel rotation lever arm on the support arm main pivot. During the first 134° rotation of the support arm, this system moves with the panels as a rigid body, but at 134°, the rigid-body motion is stopped by a detent, and rotation occurs.

4.4.1.1.4 Panel Extension

The last step in the panel deployment is the sliding of the upper over the lower panel to bring the array to its fully extended position. One possible scheme is a pantograph arrangement similar to that used in other solar array designs. This scheme would be preferable if the array consisted of more than two panels. Since only two panels are involved, an alternate is planned, as shown in Sections A-A and B-B of fig. 4.4-3. The two panels are latched together in the stowed position. During the last stage of the panel rotation, a lever on the rotation mechanism trips a latch, and four negator extension springs are released, forcing the panels to slide relative to each other. Motion takes place on nylon rollers treated with molybdenumdisulfide lubricant moving inside C-shaped tracks fabricated along the edges of the panels. The roller shafts are supported from an aluminum alloy slide bar.

4.4.2 EARTH POINTING ANTENNA DEPLOYMENT AND CONTROL

After the Lander has settled to its rest position on Mars, a high gain antenna will be erected from its stowed position within the Lander. The antenna direction will be established such that its fixed position will allow transmission of data to Earth at a specified rate for a given period of time once each day.

The antenna can be deployed from its stowed position through either side of the Lander depending upon which side is "Up". On command from the Computer-Sequencer, a spring loaded mechanism will be released to rotate the antenna out of the Lander, (fig. 4.4-4). Full deployment about the erection axis will activate a switch to provide power to the Antenna Control System shown on fig. 4.4-5.

The two stepper motors shown on fig. 4.4-4 and 4.4-5 provide the motion, θ_1 and θ_2, which positions the antenna. The commands to the stepper motors are Earth based signals since the data reduction and signal processing are done by computer on Earth the signals of this control system that are sent from the landed Capsule to Earth are:

1. θ_{1_m}, angular position readout of antenna rotation about elevation axis
2. θ_{2_m}, angular position readout of rotation of the "boom"
3. θ_x, angular readout from clinometer, gives the attitude of the θ_j Lander with respect to local vertical
4. digital output of Sun sensors.

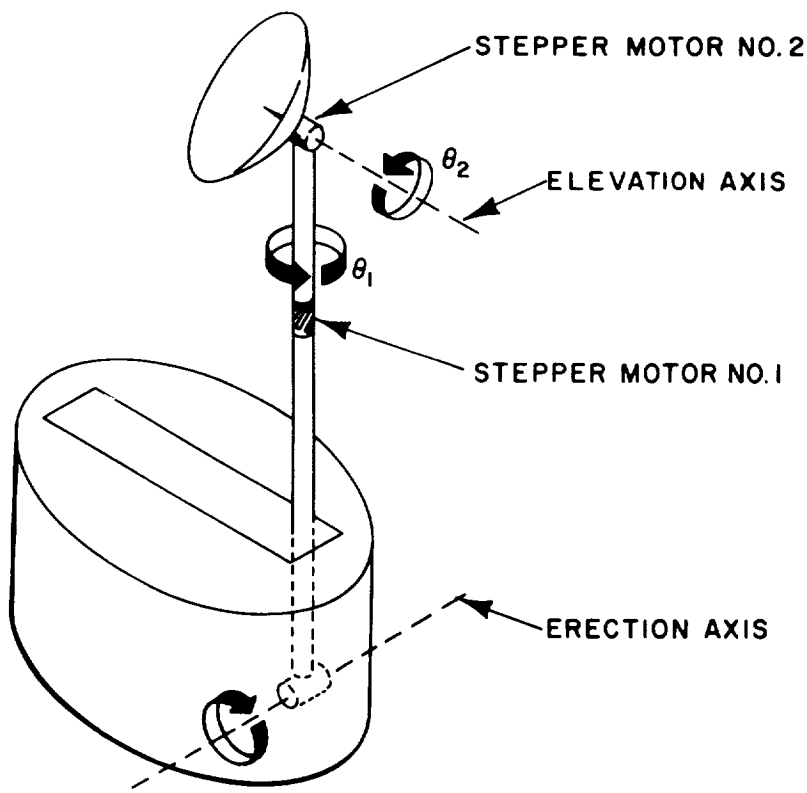

Figure 4.4-4. Earth Pointing Antenna Mechanism

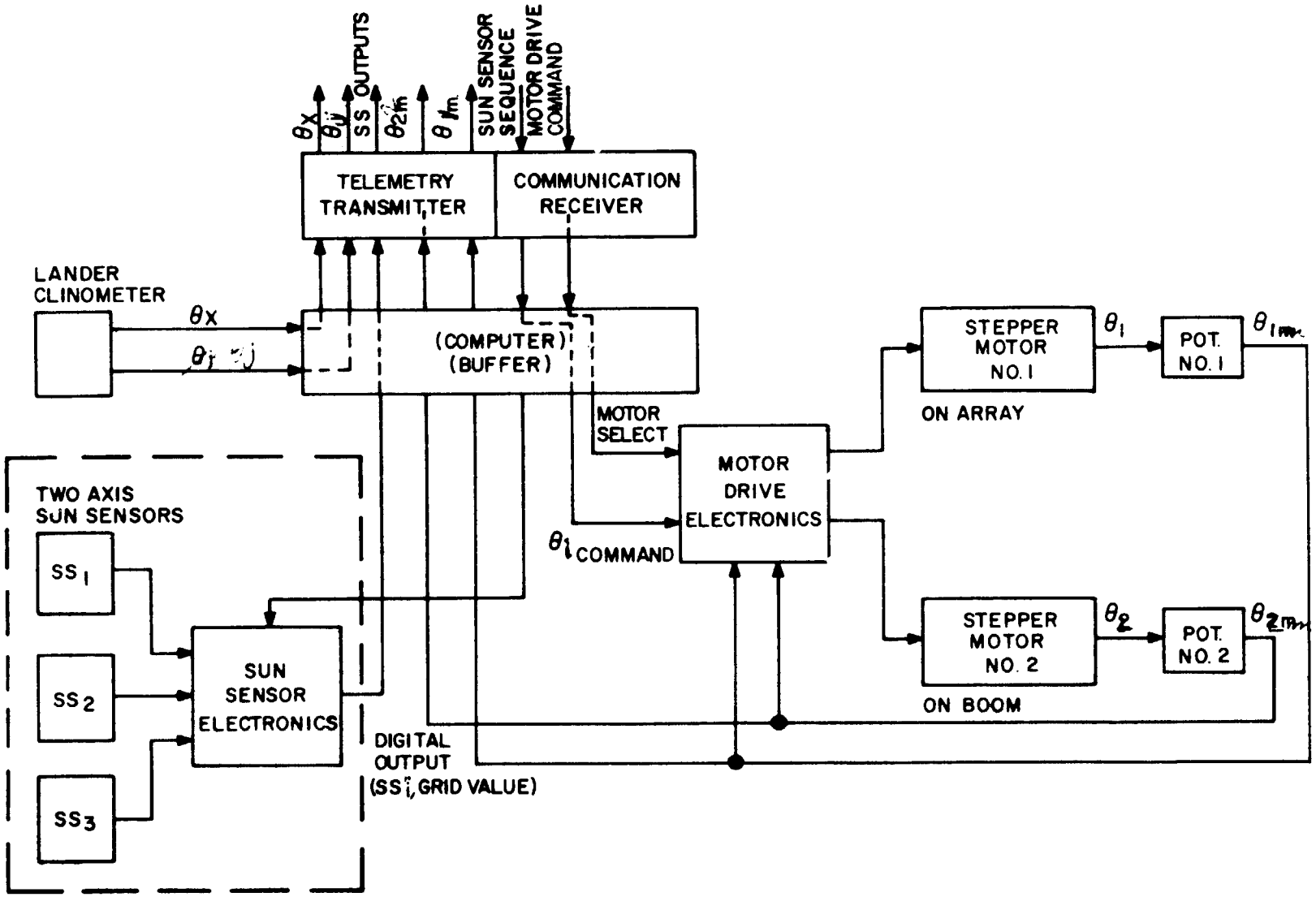

Figure 4.4-5. Earth Pointing Antenna Control

The data received on Earth from the above signal sources is processed on an Earth based computer to determine the orientation of the pointing vector of the antenna in terms of the Earth -Sun-Mars relationship. Angular position command changes are then sent from Earth to drive stepper motors no. 1 and no. 2 to change the orientation of the antenna. This process is repeated until the desired antenna orientation is obtained, and changes in orientation are made periodically during extended life missions to maximize the data that is transmitted.

The stepper motors that provide the motions θ_1 and θ_2 were used on the Surveyor Program to drive the antenna mechanism. Each motor weighs 1.2 lb and has a rated torque of 27 in-oz. The Sun sensors are the two-axis Adcole digital solar aspect systems which have been applied to a number of space missions. Each sensor has a field of view of 128° with a 1° accuracy. Three such sensors are positioned on the antenna to increase the overall field of view. Each sensor weighs approximately 3 oz. and is contained in a 3.175 x 3.175 x 0.8 case. The sun sensor electronics package selects the output of a Sun sensor and converts it into a form for telemetry back to Earth. The clinometer shown on fig. 4.4-5 is part of the basic science package.

This Earth Pointing Antenna Control System minimizes the weight required on the Lander but has the disadvantage of providing closed loop control via Earth based data reduction and issuance of commands. As such, this system can be used on extended life missions where sufficient time is available to allow a series of antenna pointing adjustments to be made.

4.4.3 CAMERA INSTALLATION

Each of the two cameras is a combined high resolution-low resolution instrument mounted on the free end of a pivoted, tubular boom. Each boom is fabricated from aluminum alloy material with an approximate length of 30 in. and an outside diameter of 2 in. (see fig. 4.3-5). In the stowed position, the two booms lie in an almost-horizontal position in the central bay in an over-and-under arrangement and are supported in this position by aluminum honeycomb saddles placed between the booms and the container covers and, in addition, between the two booms. These supports clamp the booms securely to resist the impact loads experienced by the booms during landing on Mars. Deployment is automatically initiated by a torsion spring at the hinged end of the boom when the uppermost central bay door is released and jettisoned pyrotechnically. The deployment sequence is as follows. When the upper door is removed, it takes the boom support saddles with it. This permits the upper boom to rotate about its hinge. Once the saddle on the back of the upper boom clears the lower boom, the lower boom in turn rotates. In the final deployed condition the two booms are vertical and spaced at opposite ends of the central bay. In this position the booms are latched against further movement.

4.6 ELECTRICAL POWER SUBSYSTEM

4.6.1 TRULY AUTONOMOUS CAPSULE

This concept presents two problems that differ somewhat from other Lander designs which employ a relay link.

The peak demand of the Entry Telecommunication Subsystem causes a peak demand three or four times greater than is usually the case. Secondly, the southerly landing site has forced an increase in the size of the solar array.

Power control, switching and power regulation is also provided by the EP&D Subsystem. Battery sizing of the system meets a 3-day minimum surface lifetime, with no regenerative power. The latter also supports the extended mission by serving as a collection for the solar array.

A 40 ft^2 solar array system was provided in the design. For the landing site and encounter date of the reference mission, the solar array provided an average power of 7.96 watts.

Two batteries were provided in this design to handle the diverse load requirements of the system. One battery was used to provide the high discharge rate of the direct entry communications links while a second battery was used for the other equipment. A weight saving of about 9 lb could be achieved by using two batteries. A single battery system would have to be oversized to accommodate the high discharge rate. The high discharge rate battery was also used to supply high energy pulse currents in the system.

The remaining components in the subsystem consisted of a charge regulator for charging the battery from the solar array, voltage regulator for providing the required regulated voltages to the equipment and a power controller to perform the power switching functions.

A power profile which shows the power demand vs time for the mission is presented in fig. 4.6-1. This diagram shows the 3-day cycle on battery power with the solar array supplying power afterwards for the remainder of the mission. The peak power demand occurrs at time of entry when the direct link is operated.

A block diagram of the Capsule electrical system is presented in fig. 4.6-2.

4.6.2 D/E LANDER WITH DEFLECTED RELAY

For this design, the Electrical Power and Distribution Subsystem consisted of a solar array/battery system with a 25 ft^2 solar array. This reduction in solar array size is due to the more favorable landing site for this specific mission. The same amount of average power is obtained for this reduced size array.

The data received on Earth from the above signal sources is processed on an Earth based computer to determine the orientation of the pointing vector of the antenna in terms of the Earth -Sun-Mars relationship. Angular position command changes are then sent from Earth to drive stepper motors no. 1 and no. 2 to change the orientation of the antenna. This process is repeated until the desired antenna orientation is obtained, and changes in orientation are made periodically during extended life missions to maximize the data that is transmitted.

The stepper motors that provide the motions θ_1 and θ_2 were used on the Surveyor Program to drive the antenna mechanism. Each motor weighs 1.2 lb and has a rated torque of 27 in-oz. The Sun sensors are the two-axis Adcole digital solar aspect systems which have been applied to a number of space missions. Each sensor has a field of view of 128° with a 1° accuracy. Three such sensors are positioned on the antenna to increase the overall field of view. Each sensor weighs approximately 3 oz. and is contained in a 3.175 x 3.175 x 0.8 case. The sun sensor electronics package selects the output of a Sun sensor and converts it into a form for telemetry back to Earth. The clinometer shown on fig. 4.4-5 is part of the basic science package.

This Earth Pointing Antenna Control System minimizes the weight required on the Lander but has the disadvantage of providing closed loop control via Earth based data reduction and issuance of commands. As such, this system can be used on extended life missions where sufficient time is available to allow a series of antenna pointing adjustments to be made.

4.4.3 CAMERA INSTALLATION

Each of the two cameras is a combined high resolution-low resolution instrument mounted on the free end of a pivoted, tubular boom. Each boom is fabricated from aluminum alloy material with an approximate length of 30 in. and an outside diameter of 2 in. (see fig. 4.3-5). In the stowed position, the two booms lie in an almost-horizontal position in the central bay in an over-and-under arrangement and are supported in this position by aluminum honeycomb saddles placed between the booms and the container covers and, in addition, between the two booms. These supports clamp the booms securely to resist the impact loads experienced by the booms during landing on Mars. Deployment is automatically initiated by a torsion spring at the hinged end of the boom when the uppermost central bay door is released and jettisoned pyrotechnically. The deployment sequence is as follows. When the upper door is removed, it takes the boom support saddles with it. This permits the upper boom to rotate about its hinge. Once the saddle on the back of the upper boom clears the lower boom, the lower boom in turn rotates. In the final deployed condition the two booms are vertical and spaced at opposite ends of the central bay. In this position the booms are latched against further movement.

This arrangement of relatively short swinging booms, with the capability to erect two cameras on either side of the Lander and take pictures over the edge of the Lander in segments, was selected as the most satisfactory compromise between the need for simple and stable erection devices and the requirement for adequate azimuth and vertical angles of uninterrupted vision. Studies were made of telescoping (not hinged) tubes as an alternate design, but the resulting designs proved to be unsatisfactory. Telescoping tubes cannot easily be made to extend in two directions, as required for two-way deployment capability. In addition, it was found that if a single camera is desirable, the telescopes had to be several feet long in order to provide adequate vertical angeles of vision over the edge of the Lander's impact attenuator. Booms of such length pose serious problems regarding camera stability.

The central bay door(s) of the flat pack container are secured with bolts incorporating a hot-wire release and jettisoned by springs with sufficient force to ensure that they fall clear of the Lander.

4.5 TELECOMMUNICATION SUBSYSTEM

4.5.1 AUTONOMOUS

For the truly autonomous concept which employs a direct link during entry, system configuration is as shown in fig. 4.5-1. The direct link during entry transmits the equivalent of 200 bps using 32 level FSK, as discussed in Section 2.2.1. After landing, the direct links to Earth are used for the transmission of data and for the reception of commands to control Capsule operations. The 20 watt S-band transmitter with the 24 dB gain pointed antenna transmits at rates of 2000, 1000 and 500 bps, enabling the return of $3 \times 10^6/1.5 \times 10^6$ and 0.8×10^6 bits during each 30 min transmission period. Commands are received at 1 bps using the broad beam low gain antennas.

4.5.2 DEFLECTED RELAY SUPPORT MODULE

The Capsule Communication System for the relay missions comprises the 400 MHz relay link, S-band direct link, and data handling subsystems (fig. 4.5-2).

Throughout the mission the system collects engineering diagnostic and performance data. During interplanetary cruise this data is read out by the support Module Telemetry System for transmission to Earth. After separation, a relay link is used. A 1000 bps link is established during this time using the 400 MHz, 50-watt transmitter and antenna. Operation of this link is intermittent until the atmosphere entry and descent phases begin.

When the Capsule encounters the atmosphere, data from the entry science instruments is multiplexed with the engineering data resulting in a 500 bps data collection rate. The combined data is transmitted in real time as well as after a 100 sec delay, chosen to minimize the loss of data caused by blackout. Real time and delayed data are interleaved to produce a 1000 bps transmission rate. The direct S-band link is identical to that described in Section 4.5.1.

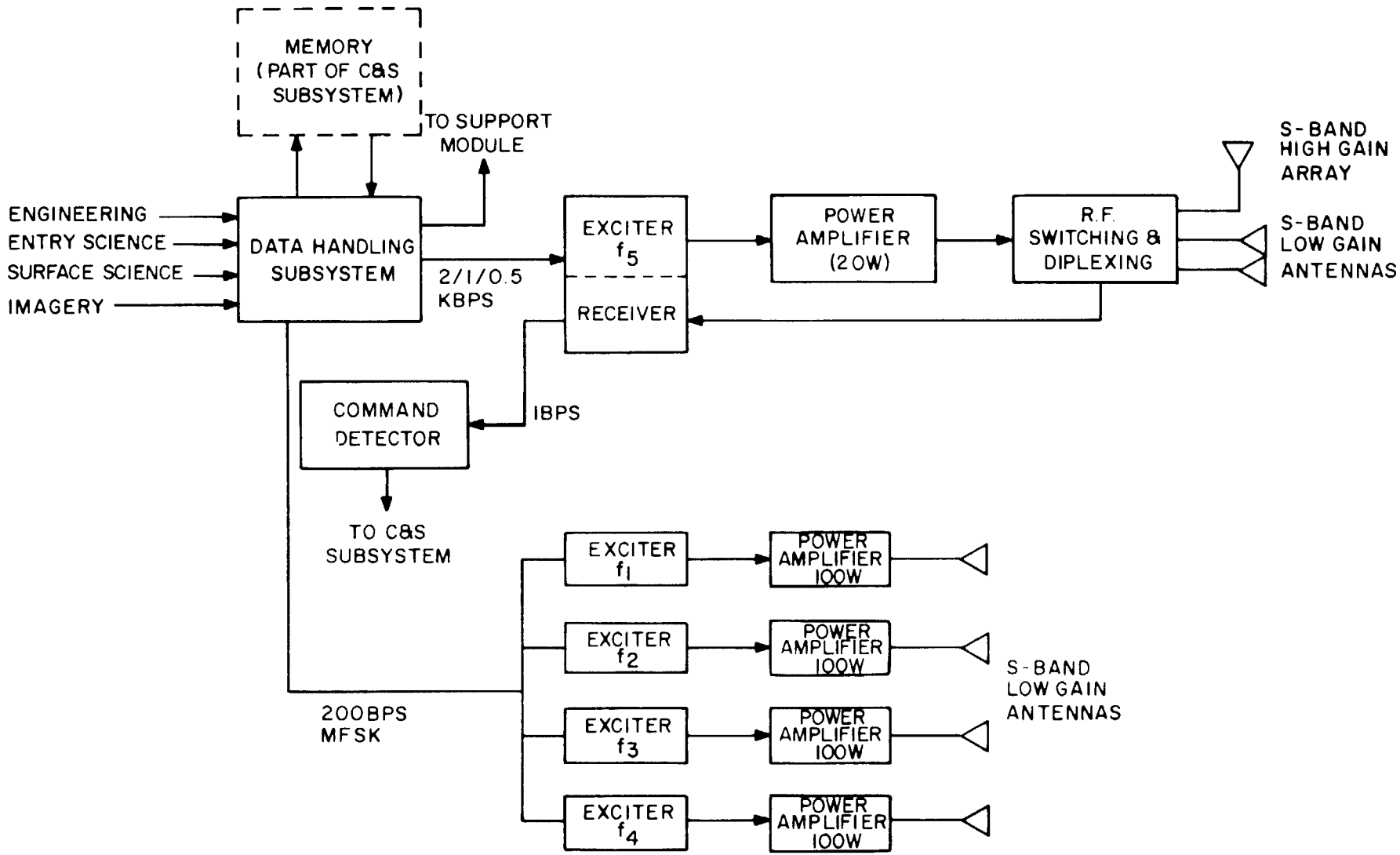

Figure 4.5-1. Telecommunications System, Direct Link Concept

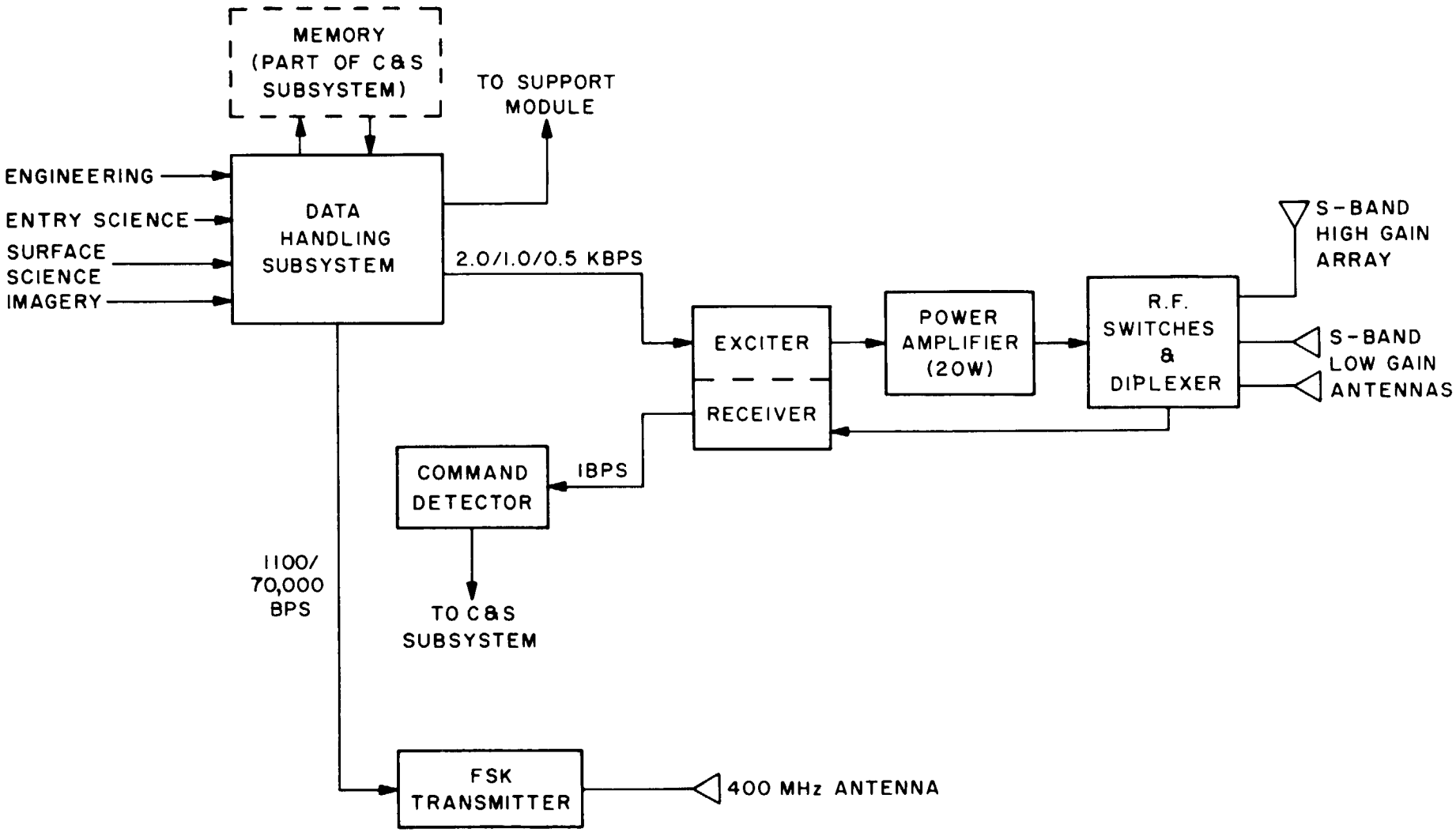

Figure 4.5-2. Telecommunications System, Relay Concepts

4.6 ELECTRICAL POWER SUBSYSTEM

4.6.1 TRULY AUTONOMOUS CAPSULE

This concept presents two problems that differ somewhat from other Lander designs which employ a relay link.

The peak demand of the Entry Telecommunication Subsystem causes a peak demand three or four times greater than is usually the case. Secondly, the southerly landing site has forced an increase in the size of the solar array.

Power control, switching and power regulation is also provided by the EP&D Subsystem. Battery sizing of the system meets a 3-day minimum surface lifetime, with no regenerative power. The latter also supports the extended mission by serving as a collection for the solar array.

A 40 ft^2 solar array system was provided in the design. For the landing site and encounter date of the reference mission, the solar array provided an average power of 7.96 watts.

Two batteries were provided in this design to handle the diverse load requirements of the system. One battery was used to provide the high discharge rate of the direct entry communications links while a second battery was used for the other equipment. A weight saving of about 9 lb could be achieved by using two batteries. A single battery system would have to be oversized to accommodate the high discharge rate. The high discharge rate battery was also used to supply high energy pulse currents in the system.

The remaining components in the subsystem consisted of a charge regulator for charging the battery from the solar array, voltage regulator for providing the required regulated voltages to the equipment and a power controller to perform the power switching functions.

A power profile which shows the power demand vs time for the mission is presented in fig. 4.6-1. This diagram shows the 3-day cycle on battery power with the solar array supplying power afterwards for the remainder of the mission. The peak power demand occurrs at time of entry when the direct link is operated.

A block diagram of the Capsule electrical system is presented in fig. 4.6-2.

4.6.2 D/E LANDER WITH DEFLECTED RELAY

For this design, the Electrical Power and Distribution Subsystem consisted of a solar array/battery system with a 25 ft^2 solar array. This reduction in solar array size is due to the more favorable landing site for this specific mission. The same amount of average power is obtained for this reduced size array.

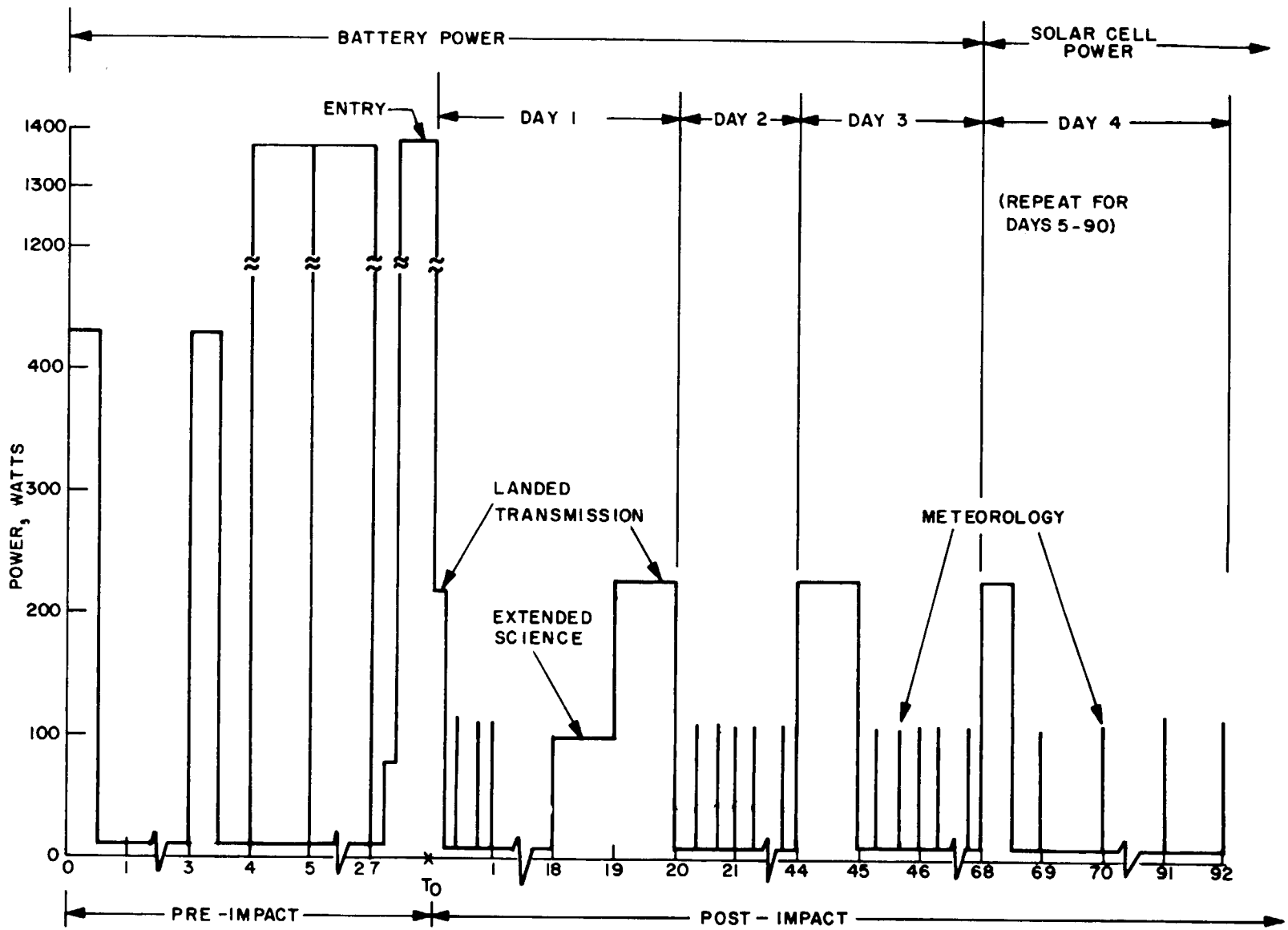

Figure 4.6-1. Power Profile

PRES
AND
SUE

RO_
SUE

ELEC
INTER
EQUIP

TELEC
SU

ELEC
POWE
DIST
SUB

SEPAR
AND RI
SUBS

COMP
AND S
SUBS

SCIEN
PAYI
SUB

Figure 4.6-2. Capsule Electrical System Block Diagram (Sheet 1 of 2)

FOLDOUT FRAME 1

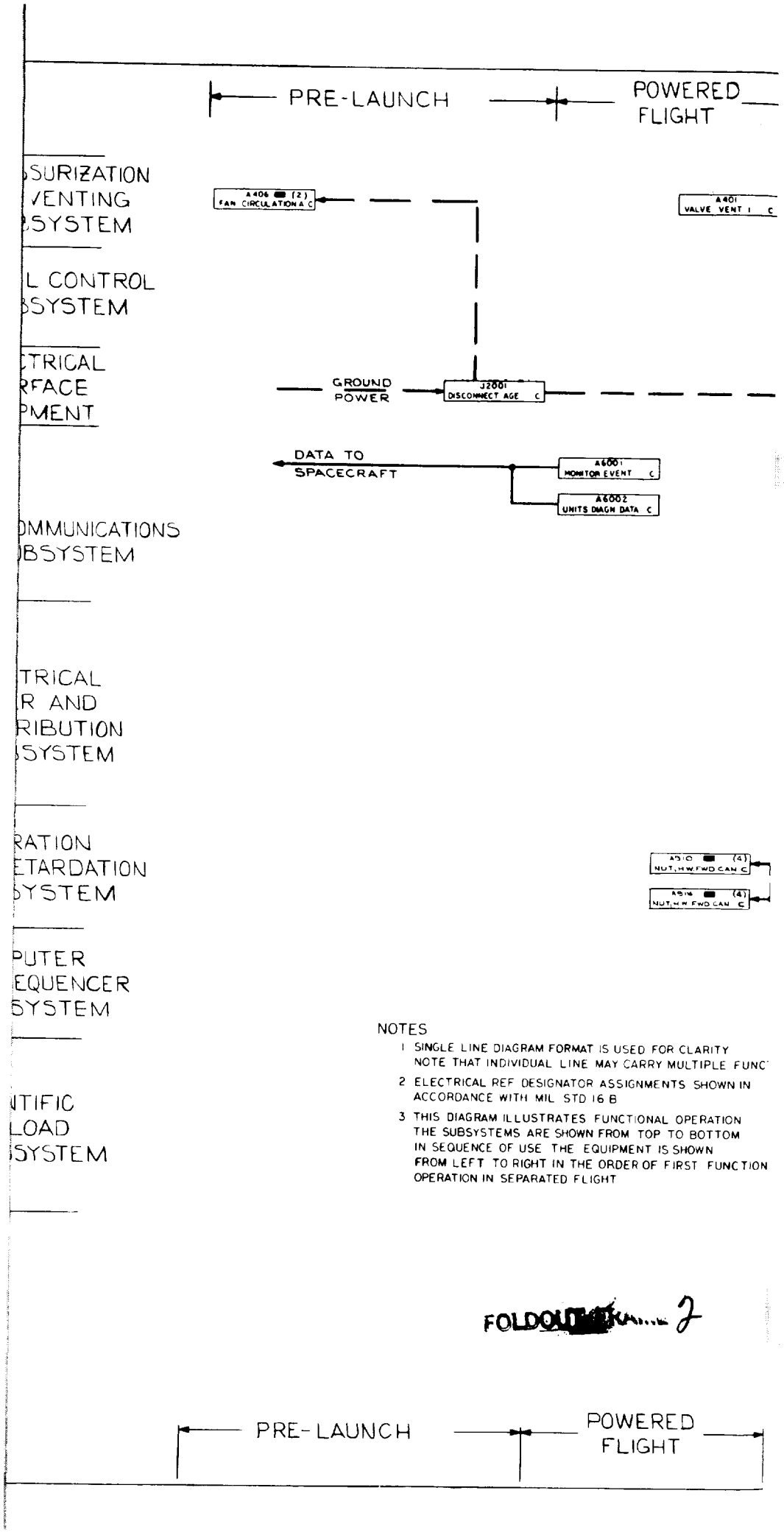
PRE-LAUNCH
POWERED FLIGHT
SURIZATION
VENTING
SYSTEM
L CONTROL
SYSTEM
TRICAL
RFACE
PMENT
OMMUNICATIONS
BSYSTEM
TRICAL
R AND
RIBUTION
SYSTEM
RATION
ETARDATION
SYSTEM
PUTER
EQUENCER
SYSTEM
NTIFIC
LOAD
SYSTEM
A406 (2)
FAN CIRCULATION A C
A401
VALVE VENT 1 C
GROUND POWER
J2001
DISCONNECT AGE C
DATA TO SPACECRAFT
A6001
MONITOR EVENT C
A6002
UNITS DIAGN DATA C
A510 (4)
NUT, H.W. FWD CAN C
A514 (4)
NUT, H.W. FWD CAN C
NOTES
1 SINGLE LINE DIAGRAM FORMAT IS USED FOR CLARITY NOTE THAT INDIVIDUAL LINE MAY CARRY MULTIPLE FUNC
2 ELECTRICAL REF DESIGNATOR ASSIGNMENTS SHOWN IN ACCORDANCE WITH MIL STD 16 B
3 THIS DIAGRAM ILLUSTRATES FUNCTIONAL OPERATION THE SUBSYSTEMS ARE SHOWN FROM TOP TO BOTTOM IN SEQUENCE OF USE THE EQUIPMENT IS SHOWN FROM LEFT TO RIGHT IN THE ORDER OF FIRST FUNCTION OPERATION IN SEPARATED FLIGHT
FOLDOUT [redacted] 2
PRE-LAUNCH
POWERED FLIGHT

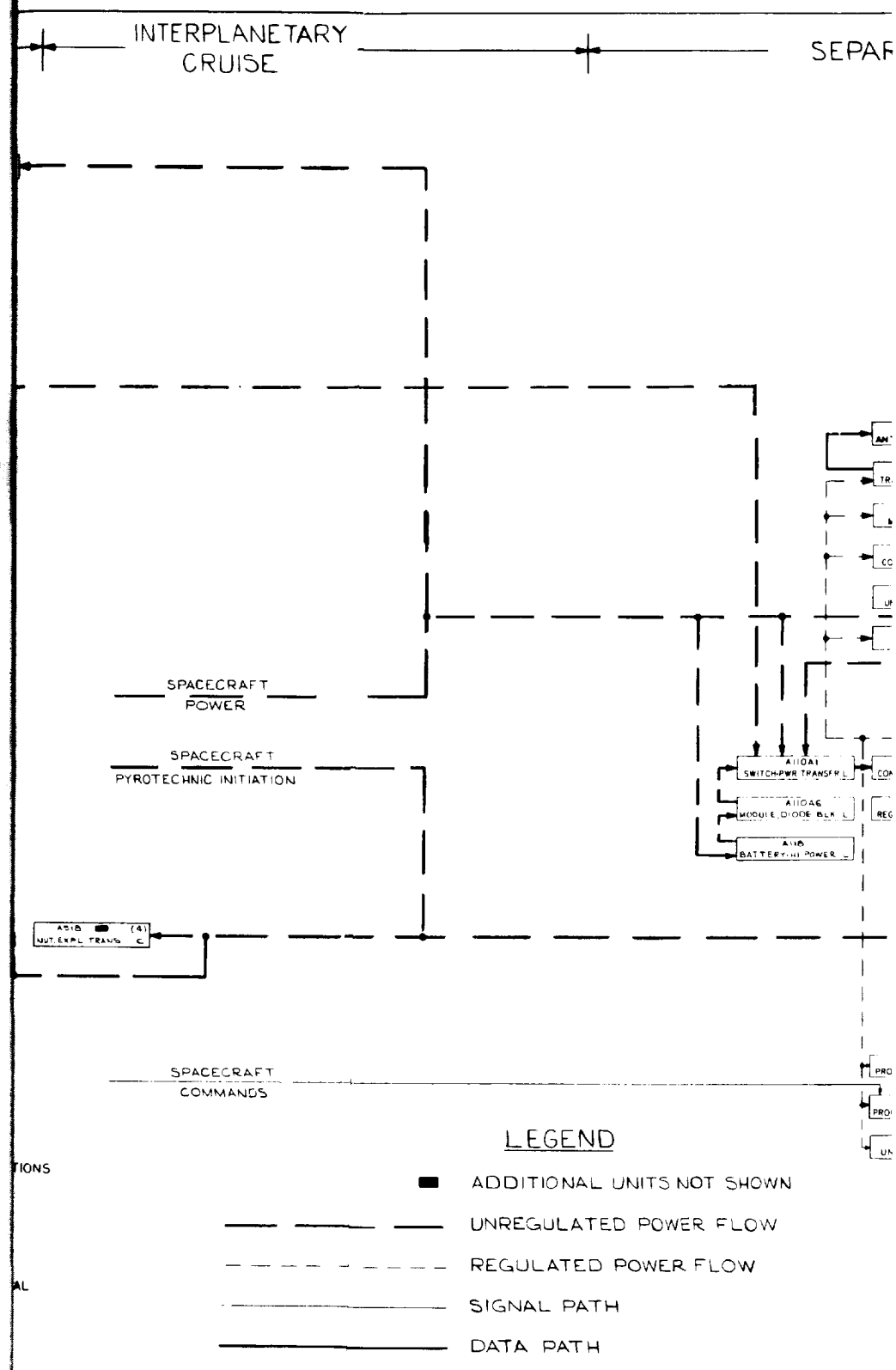

FOLDOUT FRAME 3

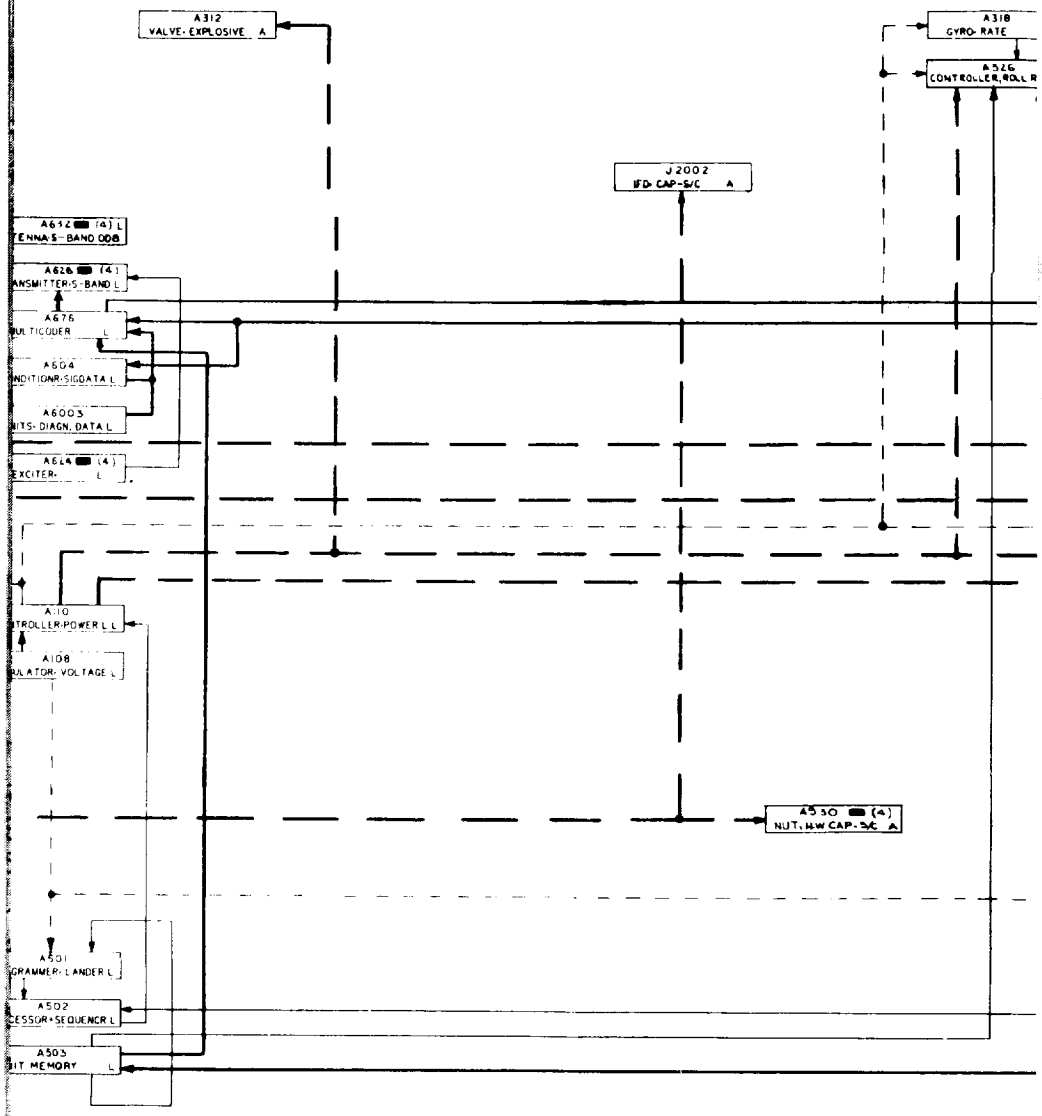

LOCATION CODE:

A – AEROSHELL

C – CANISTER (AFT LOCATED)

G – GROUND EQUIPMENT

L – LANDER

FOLDOUT FRAME 4

PRE-ENTRY
CRUISE

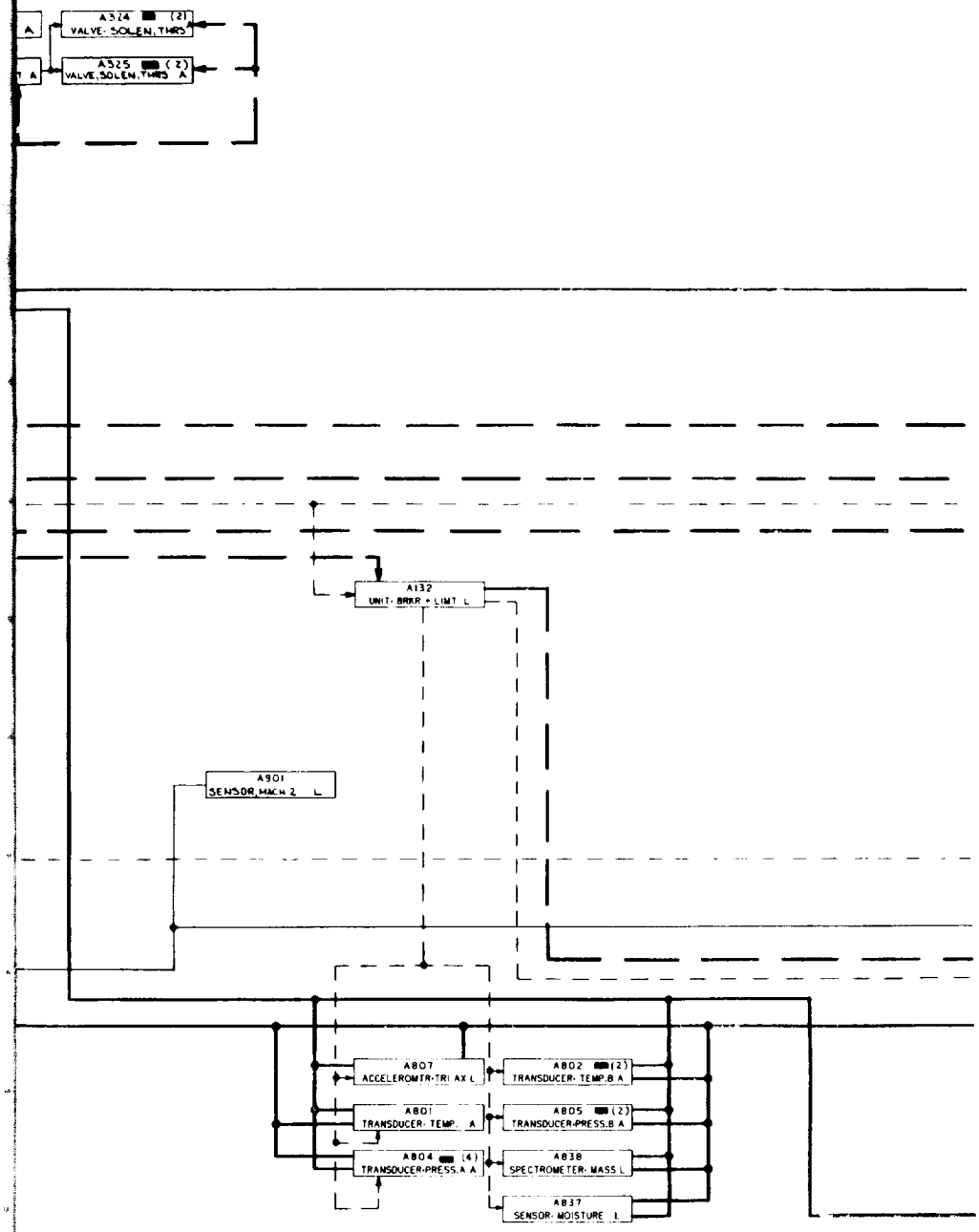

PRE-ENTRY
CRUISE

FOLDOUT FRAME 5

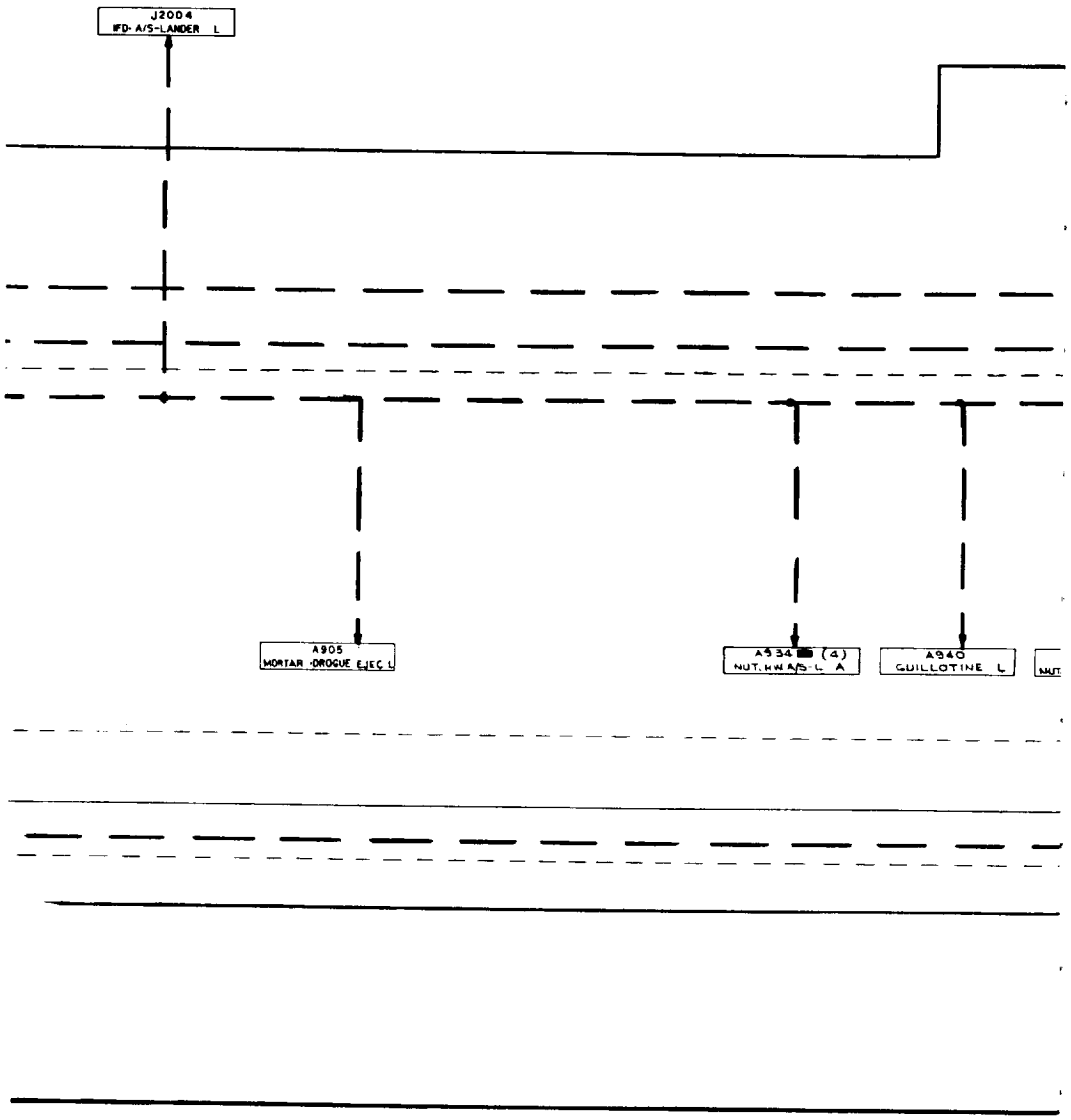

FOLDOUT FRAME 1

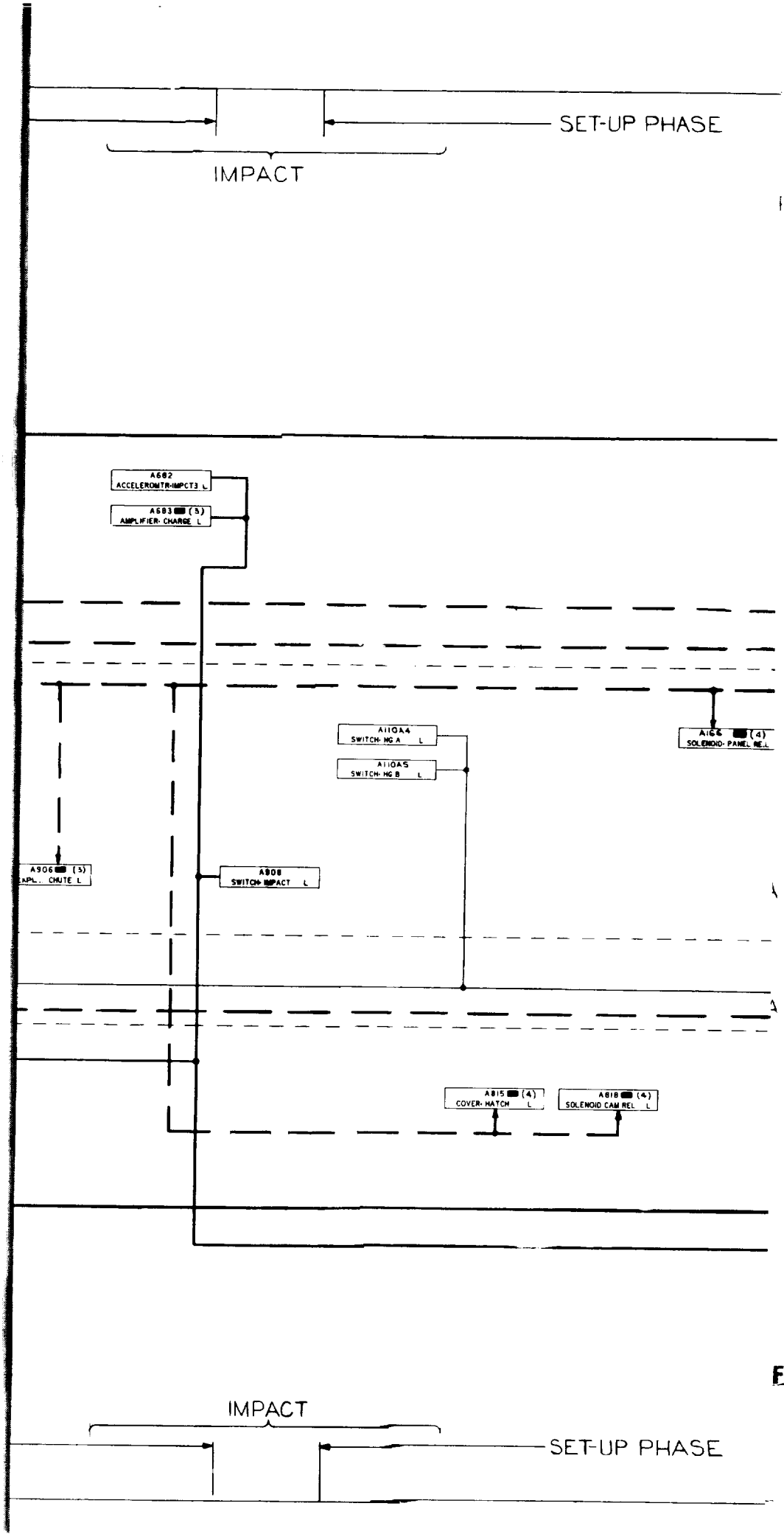

FOLDOUT FRAME 2

SURFACE OPERA

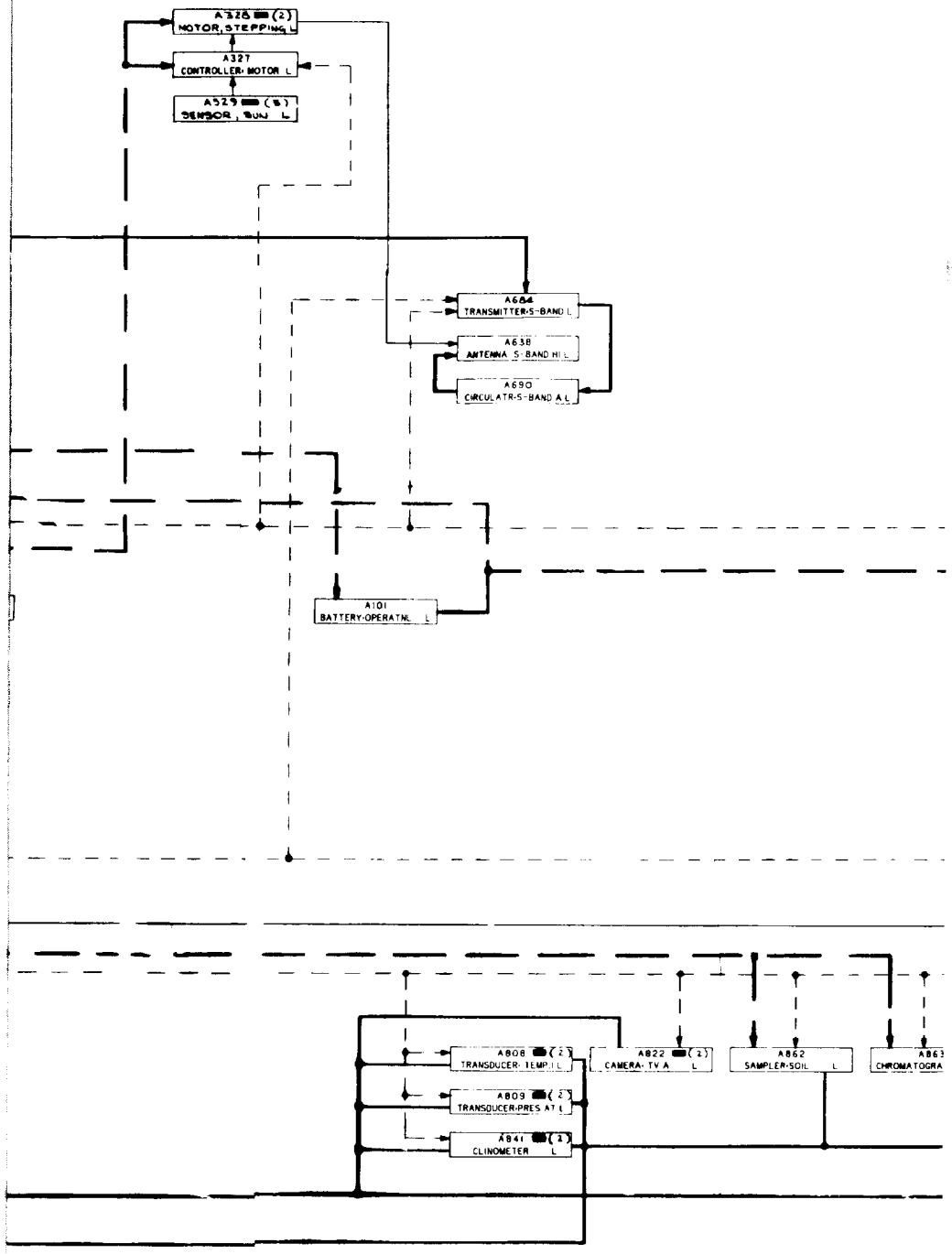

FOLDOUT FRAME 3

SURFACE

TION

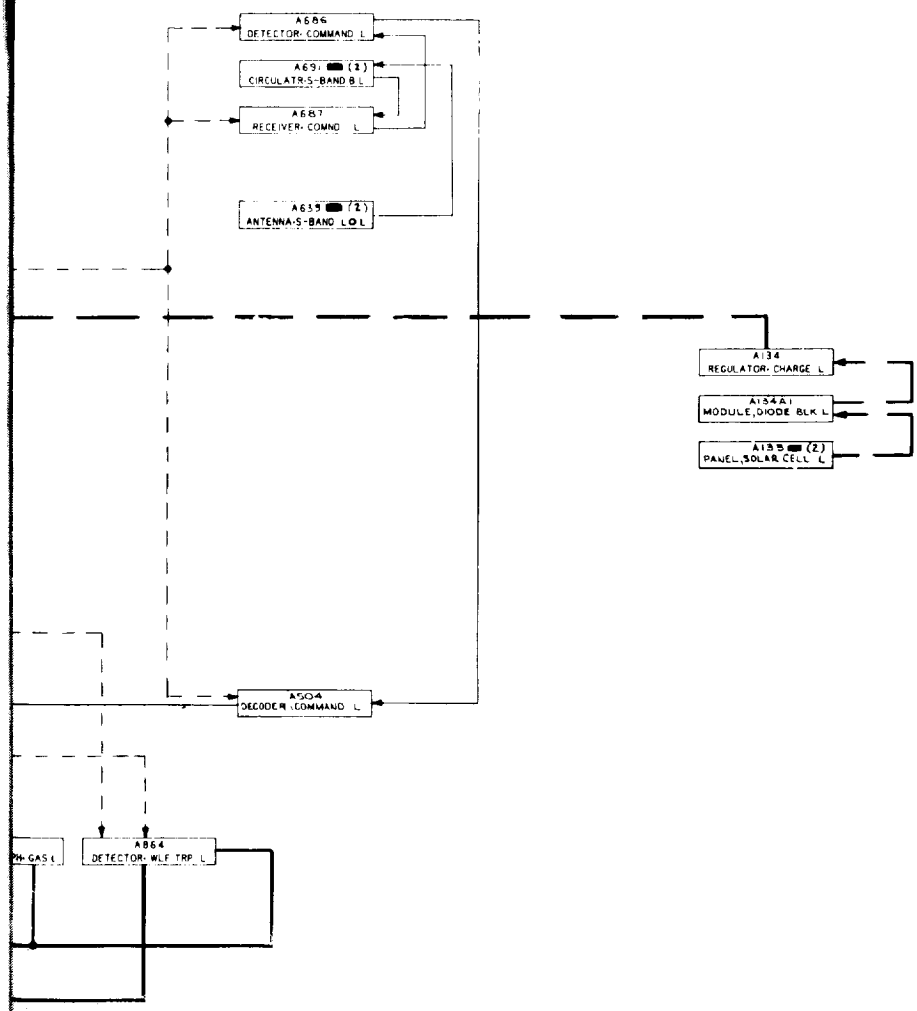

OPERATION

FOLDOUT FRAME 4

PRESSURIZATION AND VENTING SUBSYSTEM

ROLL CONTROL SUBSYSTEM

ELECTRICAL INTERFACE EQUIPMENT

TELE-COMMUNICATIONS SUBSYSTEM

ELECTRICAL POWER AND DISTRIBUTION SUBSYSTEM

SEPARATION ND RETARDATION SUBSYSTEM

COMPUTER ND SEQUENCER SUBSYSTEM

SCIENTIFIC PAYLOAD SUBSYSTEM

Figure 4.6-2. Capsule Electrical System Block Diagram (Sheet 2 of 2)

FOLDOUT FRAME 5

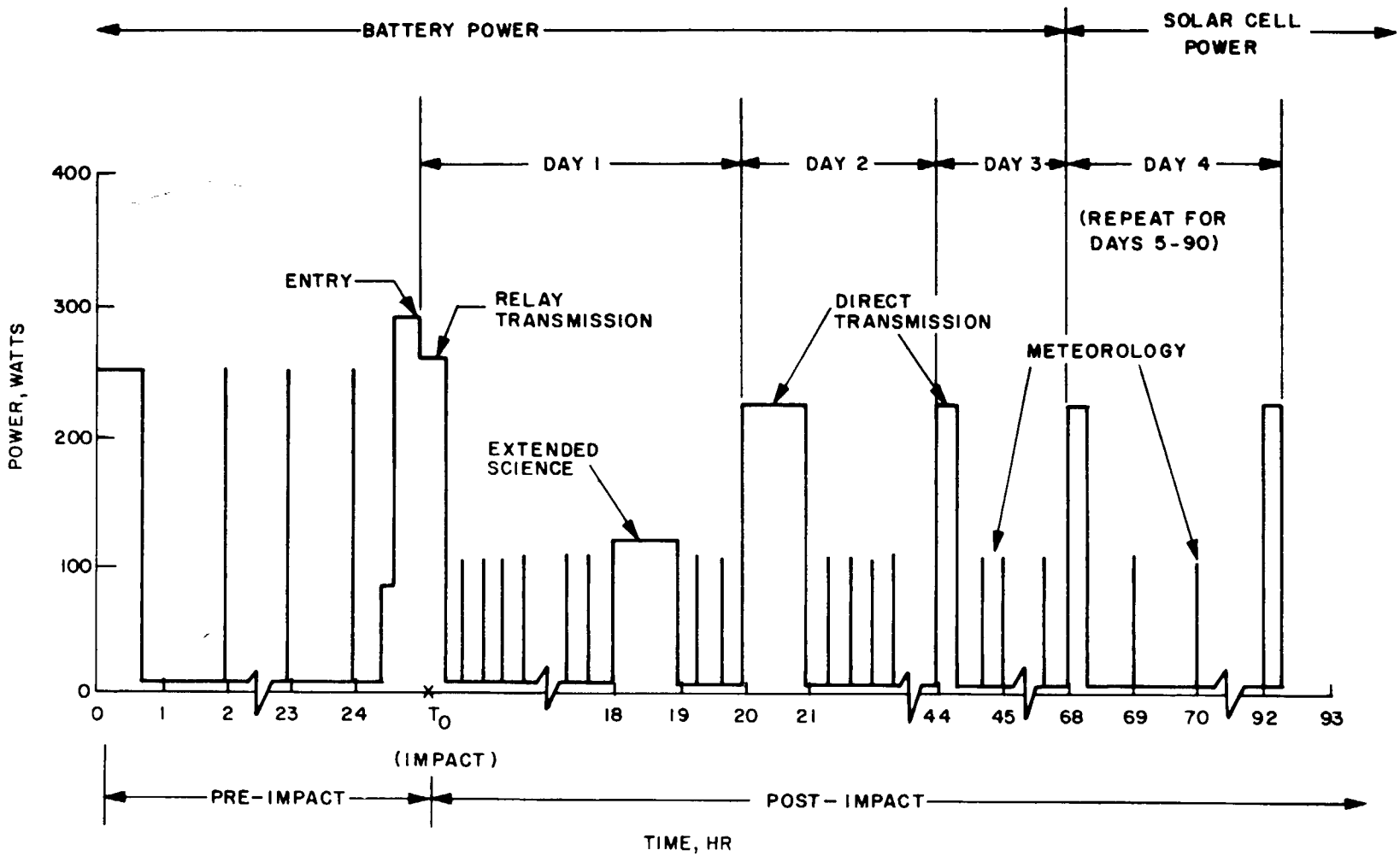

Figure 4.6-3. Power Profile Relay Autonomous Capsule

The power profile which shows the power demand vs time for this mission is presented in fig. 4.6-3. A single battery is a better solution and is used here.

The remaining components in the system are similiar to those defined for the Direct Entry Autonomous Capsule. The only difference between the two designs is that small thermal batteries with the required control and limiting equipment were provided to operate the pyrotechnics in the system.

The block diagram of this Capsule electrical system is presented in fig. 4.6-4.

PRES
AND
SU

ROLL
SUE

ELEC
INTE
EQUI

TE
COMI
SI

ELEC
POW
DISTI
SUE

SEPA
AND
SUI

COM
AND
SUE

SCIE
PA
SUB

Figure 4.6-4. Capsule Electrical System Block Diagram (Sheet 1 of 2)

FOLDOUT FRAME

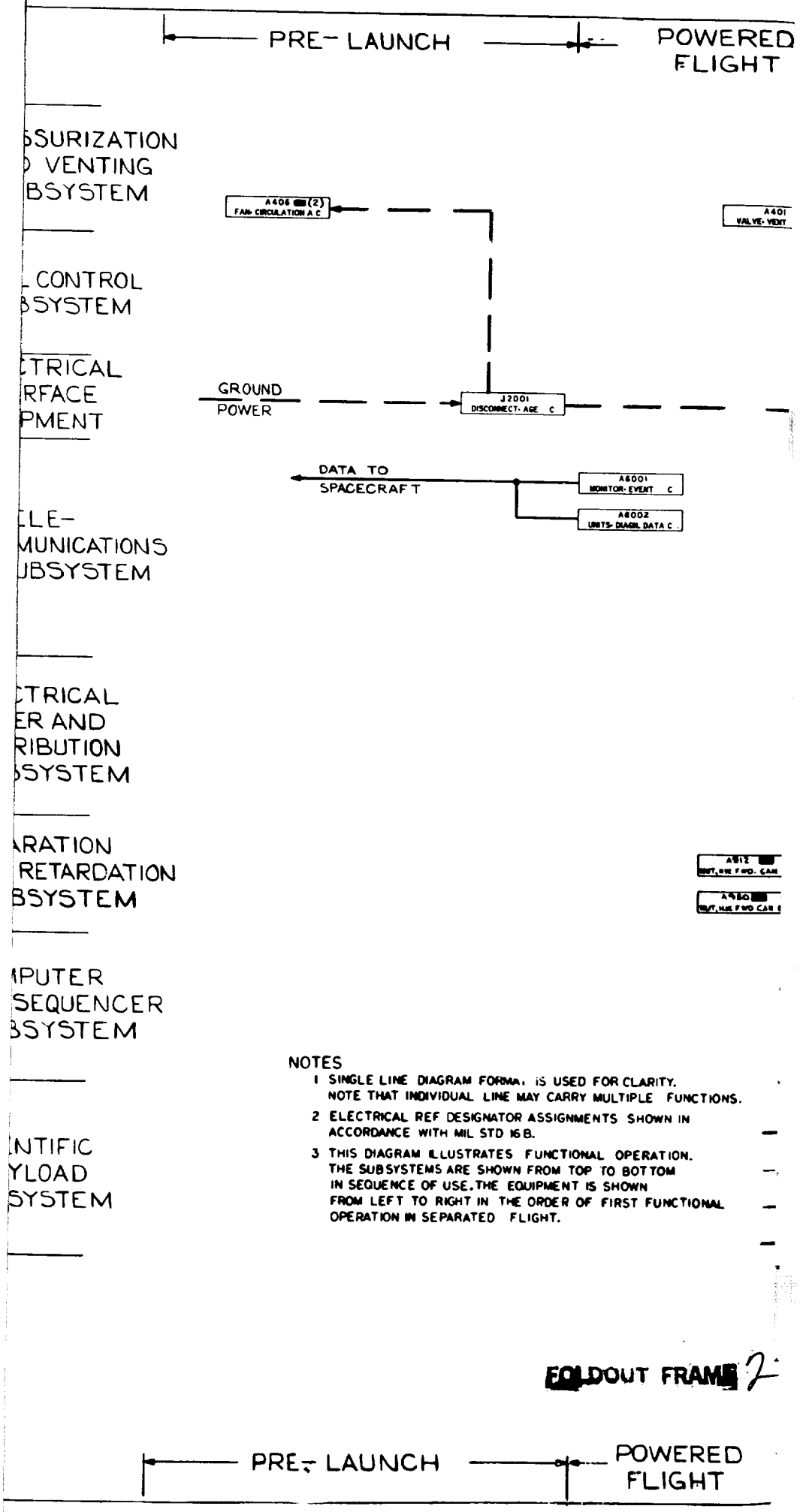

NOTES

1 SINGLE LINE DIAGRAM FORMAT IS USED FOR CLARITY. NOTE THAT INDIVIDUAL LINE MAY CARRY MULTIPLE FUNCTIONS.

2 ELECTRICAL REF DESIGNATOR ASSIGNMENTS SHOWN IN ACCORDANCE WITH MIL STD 16B.

3 THIS DIAGRAM ILLUSTRATES FUNCTIONAL OPERATION. THE SUBSYSTEMS ARE SHOWN FROM TOP TO BOTTOM IN SEQUENCE OF USE. THE EQUIPMENT IS SHOWN FROM LEFT TO RIGHT IN THE ORDER OF FIRST FUNCTIONAL OPERATION IN SEPARATED FLIGHT.

FOLDOUT FRAME 2

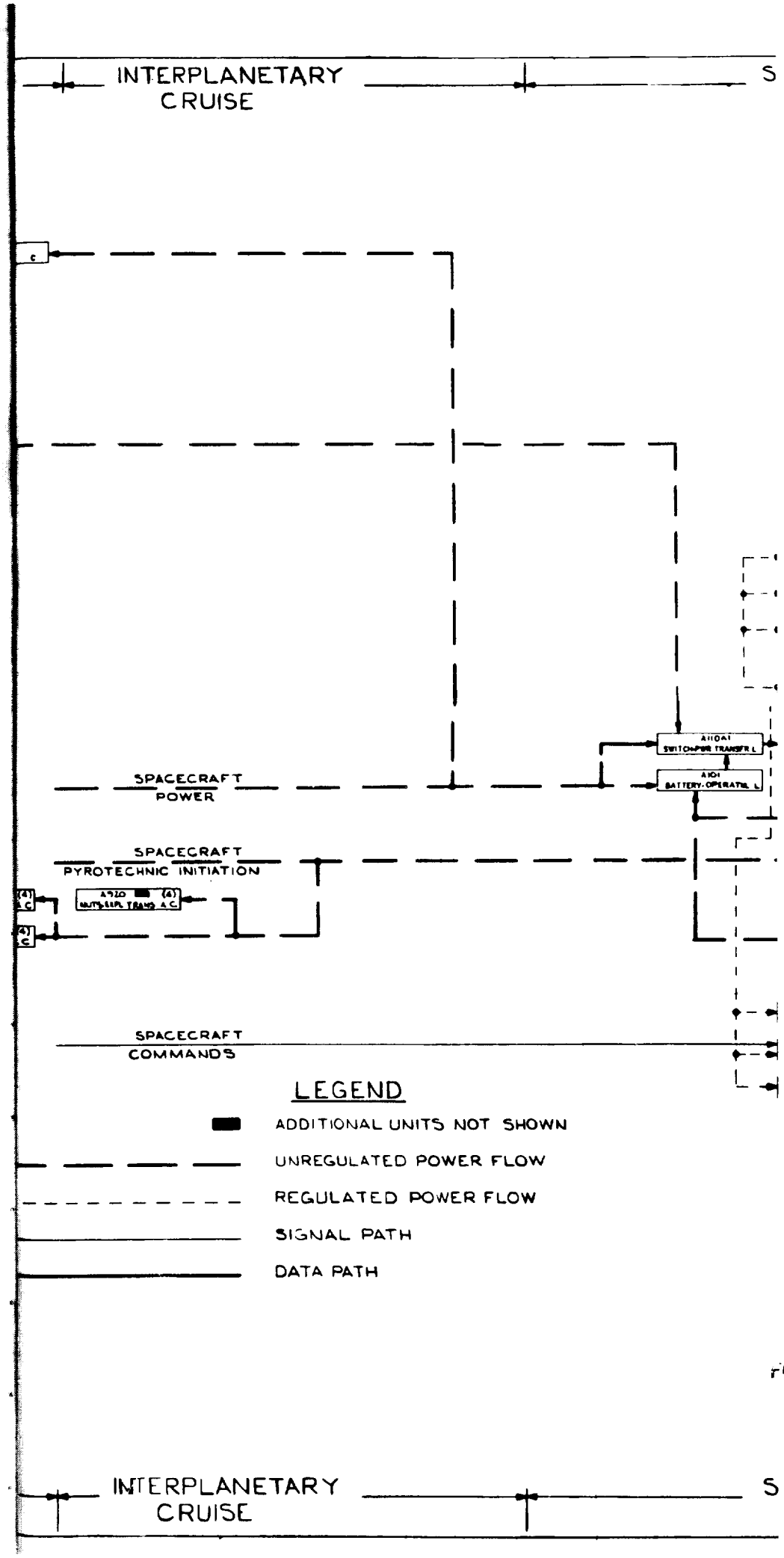

FOLDOUT FRAME 3

EPARATION PHASE

PRE-ENT CRUISE

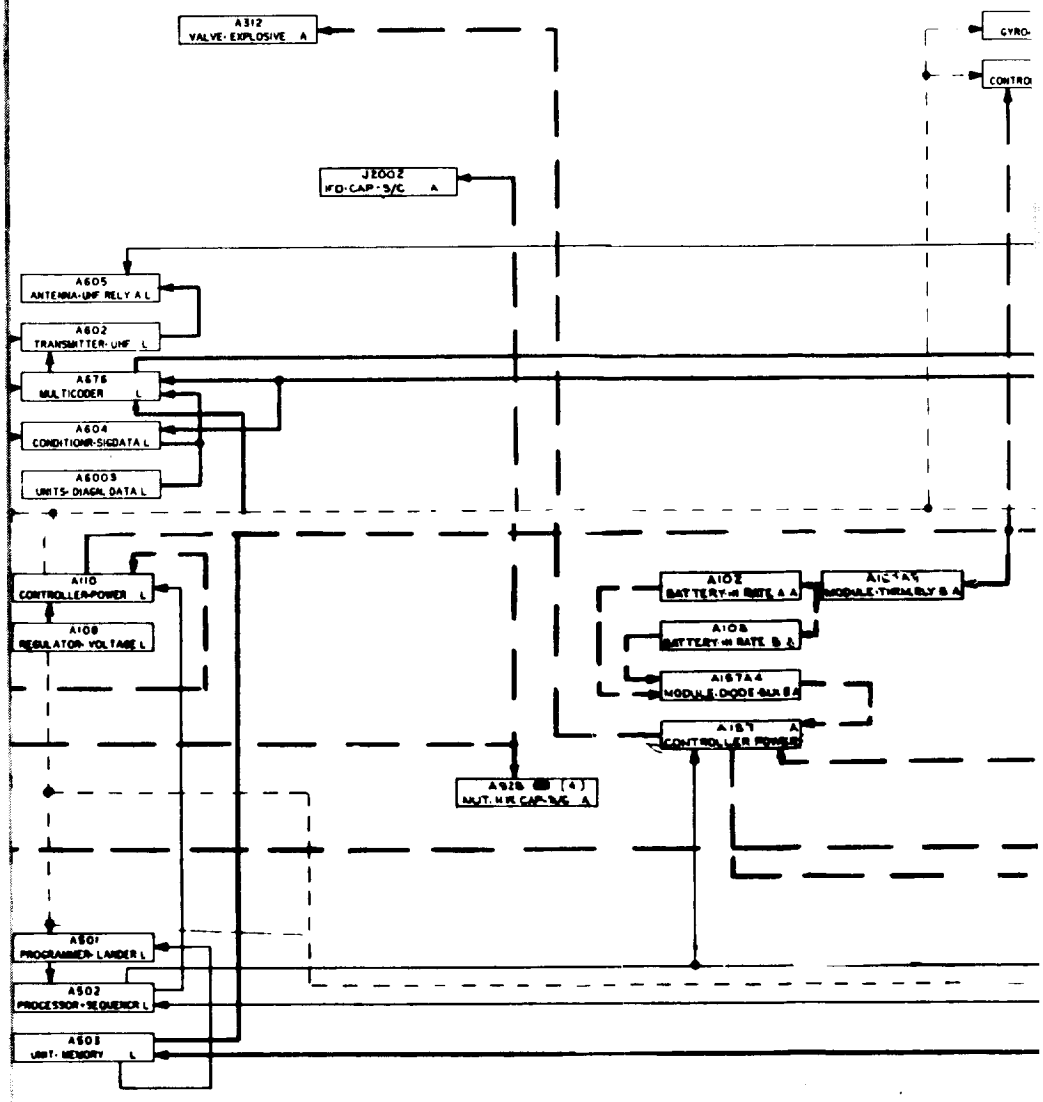

LOCATION CODE

A – AEROSHELL

C – CANISTER (AFT LOCATED)

G – GROUND EQUIPMENT

L – LANDER

FOLDOUT FRAME 4

EPARATION PHASE

PRE-EN CRUIS

RY

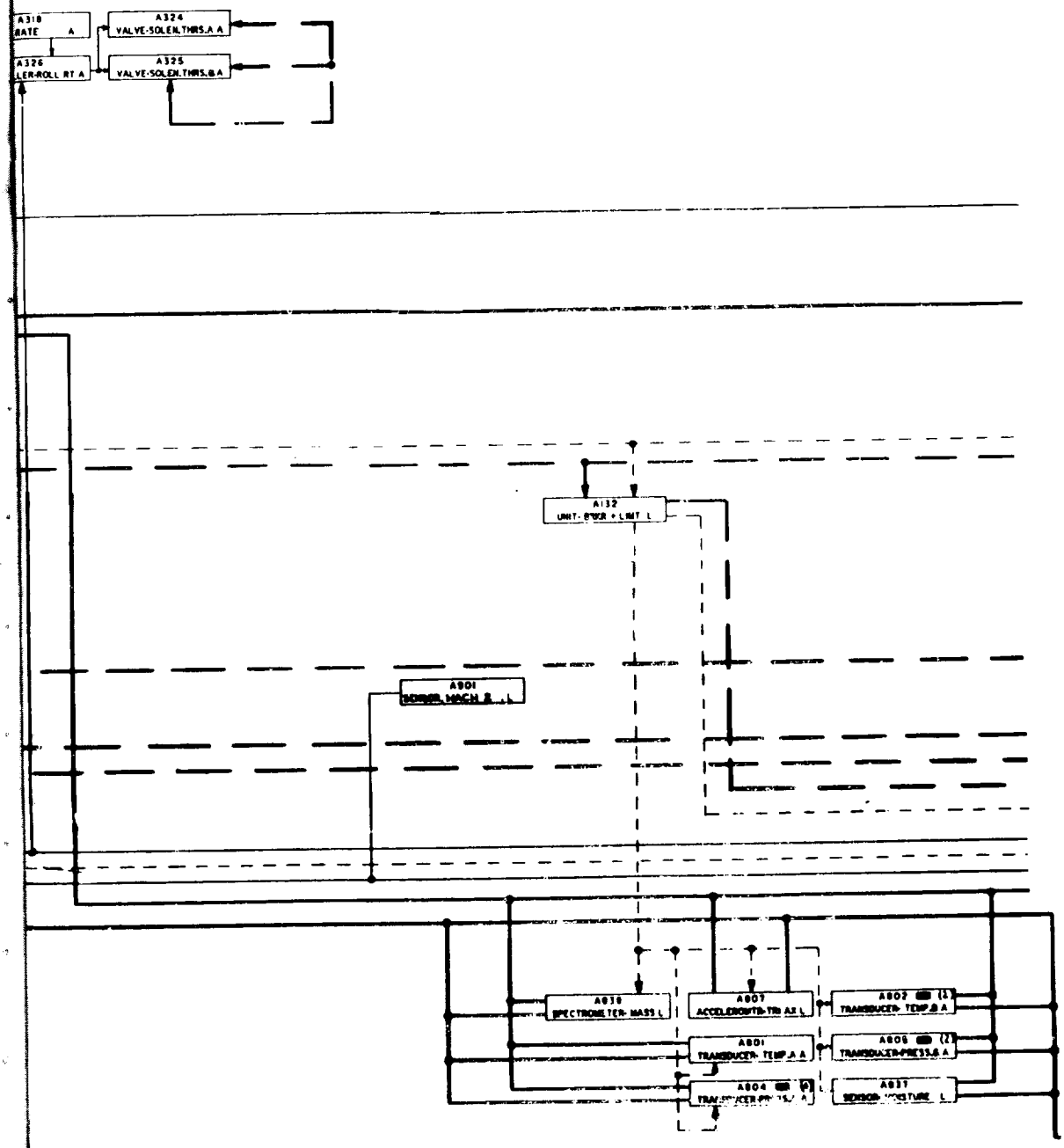

FOLDOUT FRAME 5

TRY
E

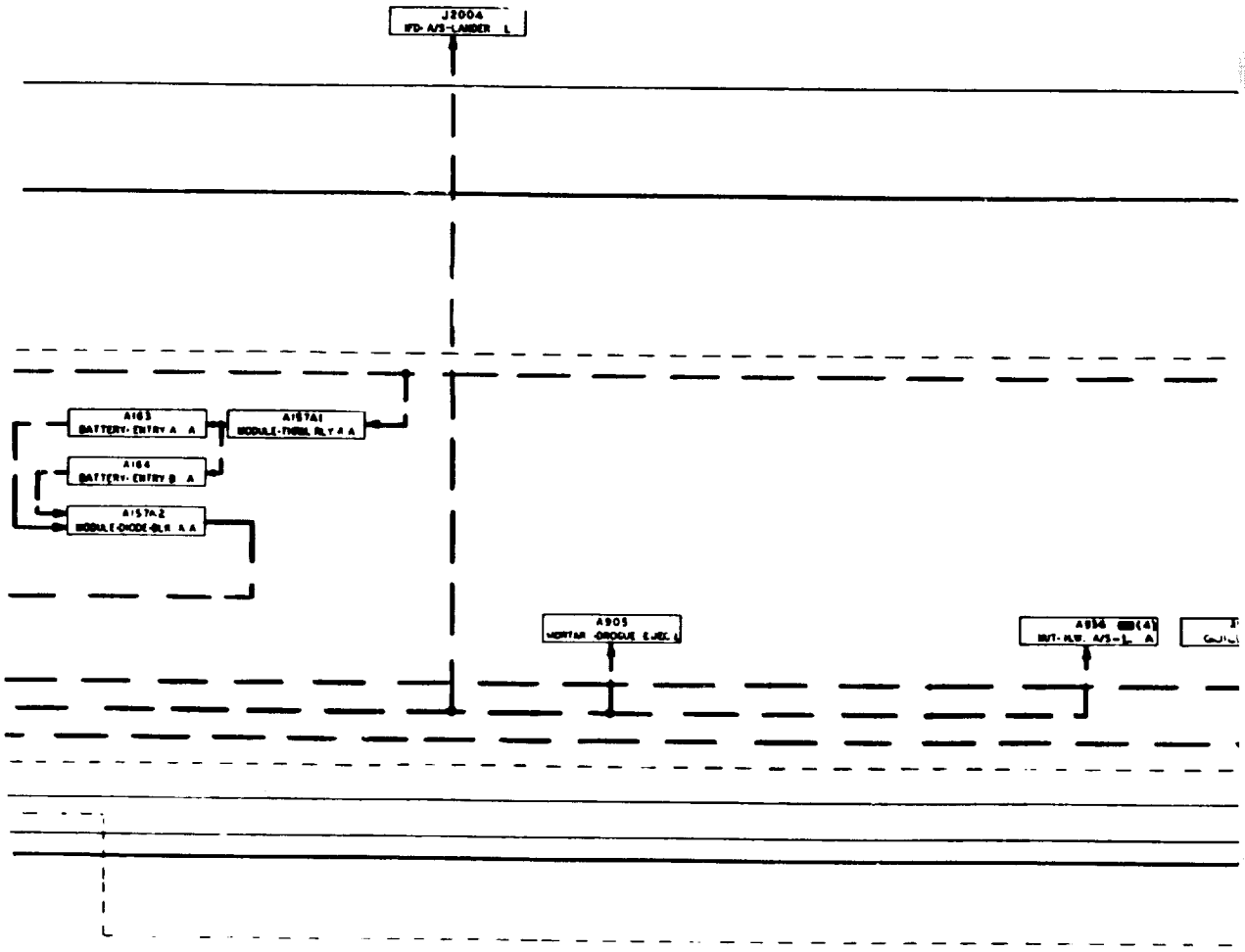

FOLDOUT FRAME 6

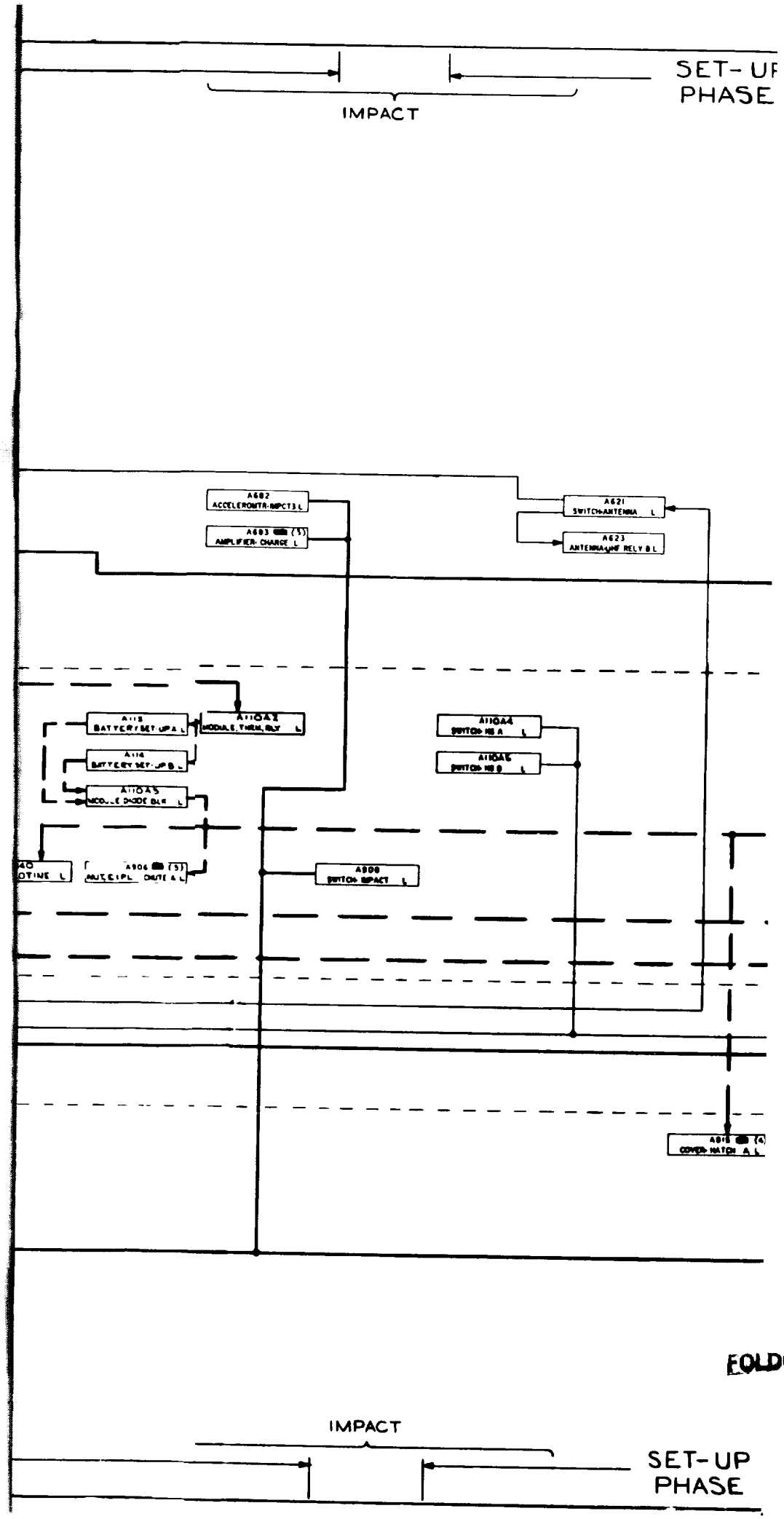

FOLDOUT FRAME 1

SURFA

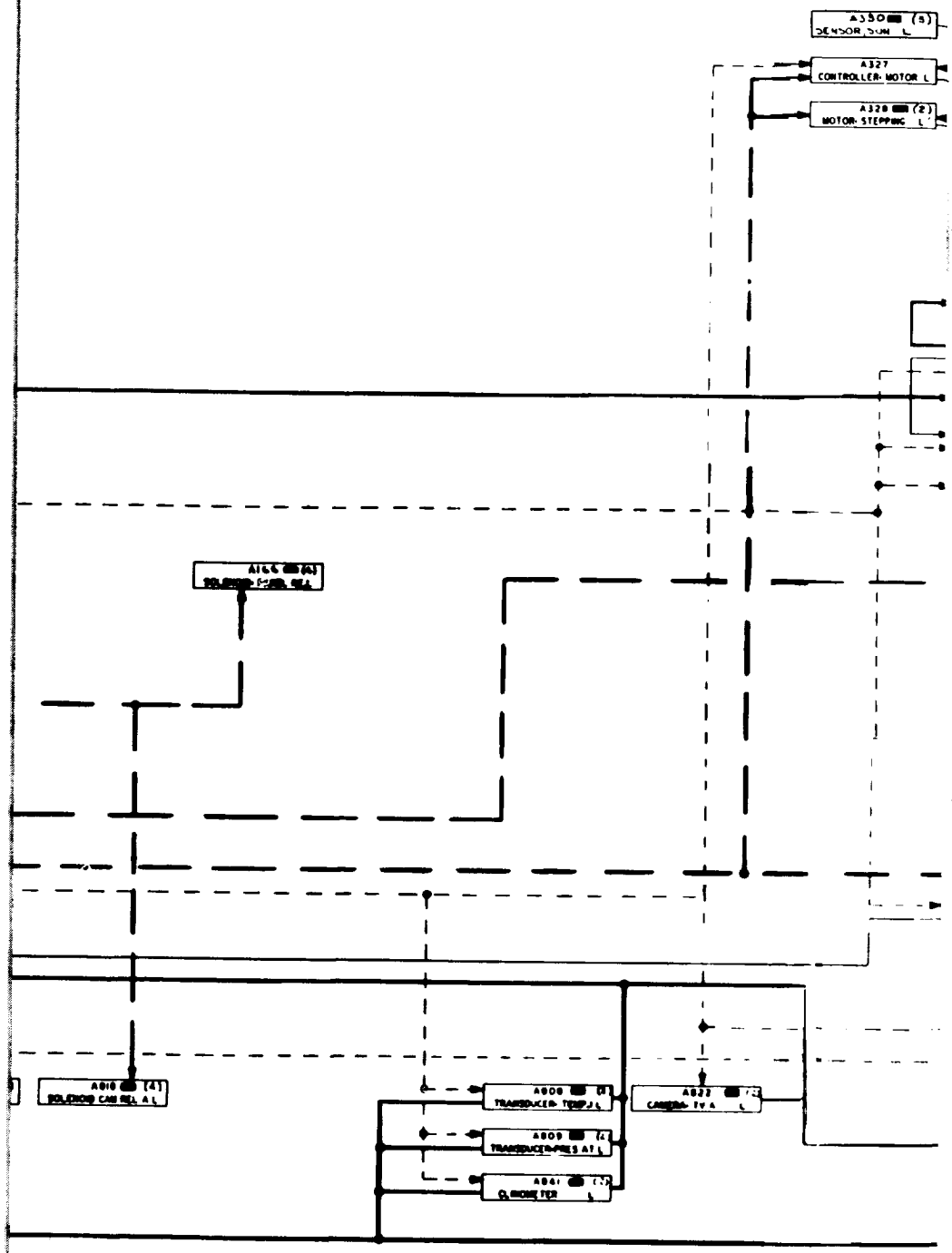

FOLDOUT FRAME 2

SURFA

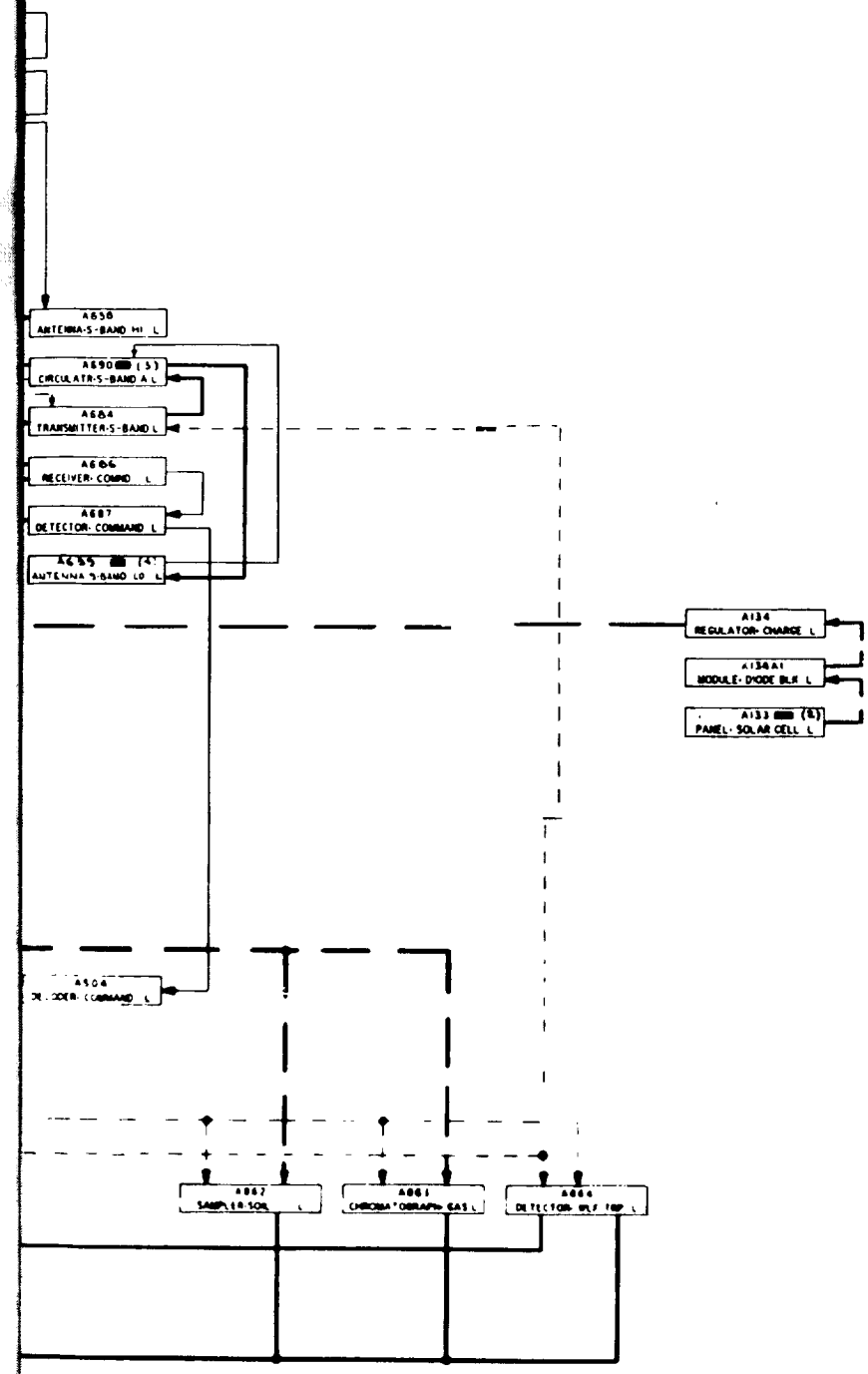

FOLDOUT FRAME 3

PRESSURIZATION AND VENTING SUBSYSTEM

ROLL CONTROL SUBSYSTEM

ELECTRICAL INTERFACE EQUIPMENT

TELE-COMMUNICATIONS SUBSYSTEM

ELECTRICAL POWER AND DISTRIBUTION SUBSYSTEM

SEPARATION AND RETARDATION SUBSYSTEM

COMPUTER AND SEQUENCER SUBSYSTEM

SCIENTIFIC PAYLOAD SUBSYSTEM

Figure 4.6-4. Capsule Electrical System Block Diagram (Sheet 2 of 2)

FOLDOUT FRAME 4

4.7 ENTRY VEHICLE ATTITUDE CONTROL

The Attitude Control Subsystem is similar for both Autonomous concepts. The only difference results from mission changes in mass properties.

The first requirement of the Capsule ACS is to control the attitude of the Capsule during the 24-hour pre-entry phase such that the angle-of-attack at entry meets the entry requirements. With the Support Module spin-stabilized at 10 rpm, the Capsule at separation will also have a spin rate of 10 rpm. This spin rate will be sufficient to maintain the inertial attitude of the Capsule by means of gyroscopic stability during the 24 hr pre-entry period. Since the spin attitude at the time of separation is within $\pm 40^\circ$ of the inertial direction of the entry angle, the continued Capsule spin will satisfy the entry angle-of-attack requirement.

The second requirement of the Capsule ACS is to provide attitude stability during entry to prevent divergence to a trim angle-of-attack. This condition may be induced when the aerodynamic torques on the relatively blunt Capsule act to produce a sufficiently high roll rate in an environment of low dynamic pressures. Therefore, the Capsule spin control system using a liquid monopropellant (hydrazine) reaction control system, a single rate gyro, and associated electronics will be initiated at the begining of entry. The Capsule will be de-spun and the roll rate will be controlled throughout entry to a value in a deadband of ± 2.5 rpm about a zero rpm level.

4.8 CANISTER AND ADAPTER

Due to similarity, both Autonomous Concepts are treated together.

4.8.1 DESIGN CONSTRAINTS

Canister and adapter design constraints are:

1. Withstand an internal pressure
2. Withstand the inertial loads of launch and powered flight
3. Provide adequate clearance between the heat shield and canister
4. Provide a combined separation and field joint
5. Provide support for the entry system
6. Transfer loads between entry system, Support Module, and transtage.

Due to the requirement to maintain biological integrity within the internal portion of the canister, it was necessary to evaluate the effects of an internal pressure on the shape, material and construction of both the forward and aft canisters. Inertial loading of the canister during flight and handling conditions, including equipment loadings on the aft canister, were traded off against the differential pressure to determine the more severe loading environment for the canister structure.

A driving influence on the canister size was the allowance necessary for clearances between the entry system and canister, estimated to be 1.9 in. Minimum leak rate was the overriding criteria for the canister joint.

The entry system is supported within the Capsule system. This design provides the capability of withstanding and transferring the entry system inertia loads through the adapter structure to the transtage ring.

4.8.2 CANISTER STRUCTURAL DESCRIPTION

The forward canister is a hemispherically-shaped minimum gauge aluminum shell making a tangent at its maximum diameter through a quarter torus section. The hemispherical shape has been shown in previous analyses to be considerably stiffer from a dynamics standpoint than a conical shape. This structure has been designed to act as a pressure vessel. The torus section is provided to eliminate the inboard kick loads and minimize shell bending at the field joint ring due to the internal pressure. The minimum gauge (0.020) aluminum material is more than adequate to withstand the pressurization and inertial loads imposed on it.

The forward canister has been designed such that there will be no yielding under design load conditions and no failure under ultimate design load conditions. This includes the transient and steady state loads encountered under the conditions of handling, transportation, sterilization, pre-flight, powered flight, transit and separation.

Inertial loading conditions were determined to be less severe than the internal pressurization condition in the design of the canister and the field joint ring. As a result, the pressure loading condition determined the desired construction, material and thicknesses to be used in the structural design of both the forward and aft canister. The limit pressure condition for the canister is 1.0 psid internal pressure, and the structure is designed, using a 1.7 safety factor, to withstand a 1.7 psid burst pressure. Stiffeners to rigidize the shell for dynamic and ground handling loads have been provided.

The field joint rings for the forward and aft canisters provided a seat for the band-clamp, which holds the canister halves together, resist the loads imposed by the internal pressure and the band clamp, and provide for the pressure-tight sealing of the canister assembly. The aft canister ring slides under the forward mating ring and has an internal leg, as shown in fig. 4.8-1. The combined inertia of the forward ring, aft ring and bulkhead is more than adequate to insure structural stability of the field joint under the critical load condition.

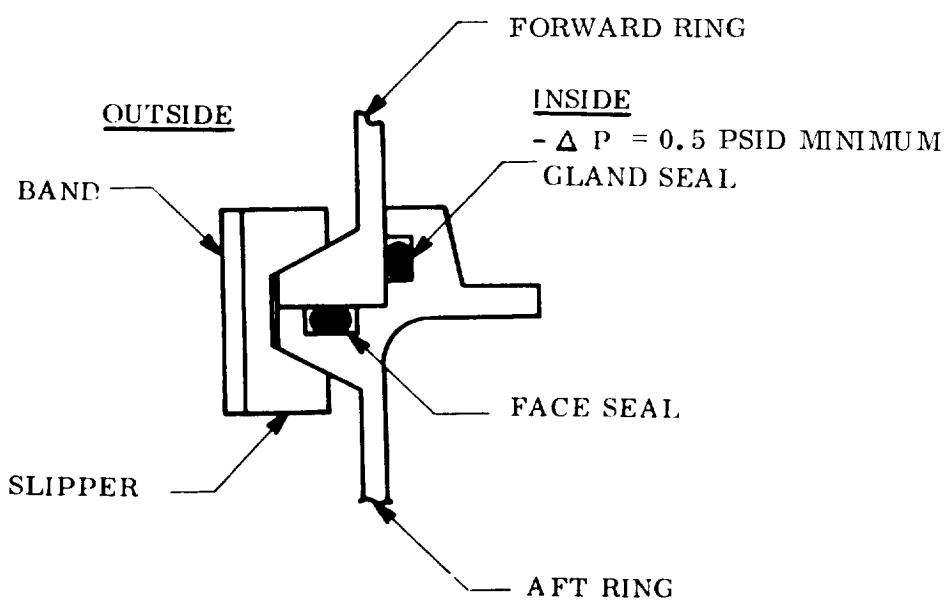

Figure 4.8-1. Canister Field Joint

The aft canister is sized for the internal pressure which dictates the same minimum sheet gauge as the forward canister. It is essentially spherical conical in shape with the forward end shaped in a quarter torus and tangent with the maximum diameter and the conical afterbody as shown in figs. 4.3-1 and 4.2-1. Stiffening members are located between the adapter and the aft canister intermediate ring to stabilize the canister under lateral loads.

4.8.3 ADAPTER

The two adapter structures provided are the Spacecraft adapter and the Support Module adapter. The Spacecraft adapter consists of two parts, one external to the canister and one within the canister. During powered flight both of these adapters transfer the loads from the entry system and the Support Module to the Transtage ring. The Support Module adapter has the additional function of connecting the entry system to the Support Module during space flight.

The external and internal Spacecraft adapters are conical aluminum shells with longitudinal stiffeners as shown in figs. 4.3-1 and 4.2-1. The shells and stiffeners have been sized such that the section modulus and working area are more than adequate to withstand the bending moment and axial loads which the structure will experience. The inertial loads used in determining the necessary section properties of the cylindrical skin and stiffeners were 6 g's limit in the axial direction and 2 g's limit in the lateral direction.

4.8.4 PRESSURE AND VENTING SYSTEM

The basic function of the Pressure and Venting System (P&V) is to prevent recontamination of the Capsule by maintaining a minimum differential pressure (Δ P) between the canister and the ambient environment from sterilization until prior to canister separation.

4.8.4.1 Design Constraints

The P&V system design constraints are:

1. Provide inlet and outlet ports into the canister for sterilization

2. Provide circulation of dry nitrogen during sterilization

3. Provide pressure relief due to temperature variations

4. Maintain a positive ΔP between 0.5 and 1.0 lb/in. differential (psid) between the canister and ambient atmosphere from sterilization until exit from Earth's atmosphere

5. Vent internal gas during ascent to maintain ΔP below 1 psid

6. Evacuate all entrapped gases to ambient space vacuum.

4.8.4.2 P&V System Description

The P&V system prevents the internal pressure within the canister, during sterilization, after sterilization and during powered flight, from exceeding 1 psid. This is accomplished using a combination relief valve with a solenoid override which opens at a nominal pressure of 15.6 psig with increasing pressure and closes at a nominal pressure of 15.3 psig with decreasing pressure. A biological filter is installed upstream of the valve to filter out any bacteria flowing upstream. Relief of a pressure buildup due to a temperature increase is accomplished using the same valve described above.

During sterilization, the P&V system provides for inlet and exit of sterilized gas by using a manually operated inlet valve connected to the sterile, filtered air supply, and electrically opening the vent valve for use as the outlet port. Since the gas will pass through the biological filter, it must be pre-filtered by ground support equipment to prevent clogging of the "prime flight filter". Two circulating fans are used to speed up the heating and cooling cycles and to eliminate hot spots. These fans are used only during sterilization and their power will be provided by ground support equipment. The makeup gas supply remains connected to the manually operated valve after sterilization and is removed just prior to launch. The canister is vented after launch and throughout powered flight until the canister reaches 0.5 psia. The canister remains pressurized at approximately 0.5 psia less leakage, after exiting the Earth's atmosphere until prior to canister separation; at which time, the vent valve will be electrically opened to evacuate the canister to near space vacuum.

To minimize the possibility of backflow during venting, the exit port from the canister is shaped as a convergent nozzle. It has been shown that in a convergent nozzle flow separation does not occur. Thus the possibility of gas flow upstream during venting is almost nil. This will preclude the entry of bacteria during the venting process when the valve is open.

The vent valve, used to vent the canister during powered flight is sized by the amount of gas and maximum permissible ΔP. For the direct link Lander design there is an initial canister volume of 400 ft^3 of gas and for the Capsule and deflected flyby canister the initial volume is 500 ft^3. The nominal fill pressure will be 15.45 psia at 70°F. The required valve apertures are equivalent to a 6.85 $in.^2$ circular orifice for the direct link Lander and 9.9 $in.^2$ for the deflected flyby.

The valve is a spring-loaded, pilot-operated relief valve with a latching override solenoid, and a position indicating switch. This permits its use for relief, venting,

purging and evacuation. The proposed valve will be similar to Sterer P/N 19260, Pneumatic and Pressure Control Valve Assembly. The basic changes required to the valve relate to operating pressure and orifice area. It is estimated that the proposed valve will weigh 6.5 and 8.1 lb respectively for direct link and flyby Landers. Electrical power required for the solenoid is 1.5 amps at 30 vdc at 70°F for 1/2 sec maximum.

The biological filter is used to prevent bacteria migration into the Capsule through the vent valve in the event the valve fails in the open position. The filter is installed in series with the valve and upstream of it. The filter is required to prevent upstream migration of bacteria while presenting a low pressure drop to the air being vented. Using Pall Corp's Ultipor 0.9 medium, filter area of approximately 12.5 ft^2 is required for the direct link and 15.7 ft^2 for the deflected flyby Lander. The filter assembly will be 10.25 in. long by 7.5 in. diameter and would weigh approximately 4.5 lb for the former and 11.2 in. long x 6.2 in. diameter with a weight of 5.7 lb for the latter.

The choice of Ultipor 0.9 was made because it presents a lower pressure drop than Ultipor 0.15, while satisfying the filtering requirements. It has a catalog rating of 100 percent removal of 0.08 micron particles in dry air. The filter can be decontaminated with ETO and has a temperature rating of 350°F in air.

4.8.5 SUBSYSTEM SEPARATIONS

Five separation functions are required for the Autonomous Lander designs. These are:

1. Release and separation of forward canister shell.
2. Release and separation of the Capsule and Support Module from the aft canister structure.
3. Release and separation of the Capsule from the Support Module.
4. Release and separation of the Lander from the aeroshell.
5. Release of parachute from the Lander.

Each separation event has been designed to meet the following requirements in addition to the usual environmental criteria.

1. Separation shall not produce debris or loose objects.
2. Separation shall not cause collision with any of the remaining payload.

3. Provide electrical initiation of separation function.

4. Provide redundancy in initiation function.

5. Maximize use of proven concepts.

4.8.5.1 Separation Description

4.8.5.1.1 Canister Separation

The canister separation equipment has been designed to:

1. Provide a combined field and separation joint.

2. Maintain a pressure-tight joint from sterilization through exit from the Earth's atmosphere for a maximum internal pressure of 1.67 psid. Pressure tight is defined as leakage which results in less than 0.002 psi drop/hr at 70°F.

3. Maintain maximum attainable pressure tightness during space cruise where outside temperature may be as low as -300°F.

4. Eject the forward canister at a controlled separation rate.

The selection of the separation method for the canister is governed by the requirement for a sterile, pressure-tight joint for a large, flexible structure. This basic requirement limits the separation joint design to one that can apply a continuous distributed force, such as flexible shape charge, various types of MDC or primer cord, V-bands, closely spaced bolted joint, "pyro fuze" joint system or a thermal heat pad joint system. The V-band system was selected because of its simplicity, reliability, low separation shock, lack of debris, tolerance to temperature environment, eliminates need for a field joint, and it presents a tortuous path for microbial access to the separation interface.

The band must meet the following specific requirements:

1. Contain proof pressure without yielding

2. Provide the necessary clamping force without yielding

3. Contain the burst pressure without failing

4. Make allowance for creep at low temperature over a 9 month period.

The V-band assembly is made in four segments, with the strap material being 2024T86 aluminum, 1 in. wide x 0.25 in. thick. The slippers which are attached to the band by clips, are made of 7075T73 aluminum. The V-band segments are held in tension by four hot-wire bolt assemblies. The choice of four points for attaching and torquing was made to maintain nearly uniform tension on the entire band and to facilitate band disengagement. The hot-wire bolt is a mechanical separation device which utilizes the reduction of tensile strength property of a material upon heating to actuate. Upon application of 12 amps for 30 msec, the hot-wire element breaks and separation occurs. The hot-wire bolt consists of two separate studs connected by a segmented coupling. The coupling is held together by the hot-wire element, so that tension can be carried by the mechanism.

The required preload of 7300 lb maximum can be applied through 1/2 in. diameter thread and a 1.30 in. o.d. coupling (see fig. 4.8-2) made of 17-4 PH, Cond 1050 steel with an ultimate load capacity of 19,000 lb tension. Thirteen turns of 0.025 in. diameter 302 stainless wire form the hot-wire element. The segments of the coupling are retained so that there is no debris. This unit is ideal for long service in space because of its all metal design. The band will separate if any of the four bolts operate.

HOT WIRE TENSION BOLT

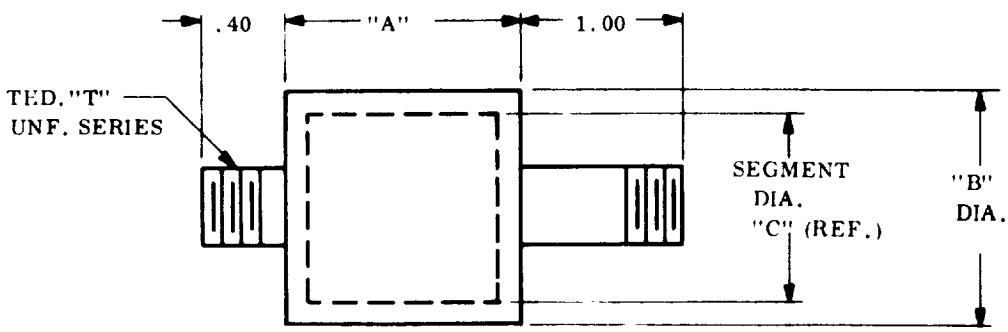

CANISTER DIA. (FT)	MAX. LOAD (LBS)	PHYSICAL DATA A	B	T	C	HOT WIRE DATA WIRE DIA.	NOTCH DIA.	# TURNS	A.F. CURRENT	WT #
12-16	19,000	1.40	1.62	1/2	1.30	.025	.0075	13	12.0	.81

ALL DIMENSIONS ARE IN INCHES

Figure 4.8-2. Hot-Wire Tension Bolt

The forward canister is ejected by four helical coil compression springs that provide a separation velocity of 2.5 fps. The springs are of 302 stainless steel, stressed at 90,000 psi and are retained with the aft canister, in an adjustable subassembly (see fig 4.8-3). Tip-off rates will be less than 2.0°/sec about any axis. Center of gravity offsets are expected to be minimal since the forward canister is of symmetric construction.

The canister separation joint seal utilizes two silicone rubber O-rings to maintain a pressure-tight seal. The O-rings are used in two different modes to enhance sealing capabilities, one O-ring being a face seal and the other a gland seal (see fig. 4.8-1). This arrangement utilizes the axial and radial clamping forces of the V-band and closes off the clearances resulting from manufacturing tolerances, while retaining a machineable and structurally sound ring design. The face seal O-ring is nominally 0.189 in. diameter and is compressed from 0.014 in. to 0.041 in., or 10 to 30 percent. The force necessary to compress this O-ring using 50 durometer silicone is from 1.2 - 12.0 lb/linear in. The gland seal is nominally 0.210 in. diameter and is compressed from 0.030 to 0.70 in., or 15 to 35 percent. The radial force to compress this ring is from 6 to 35 lb/linear in.

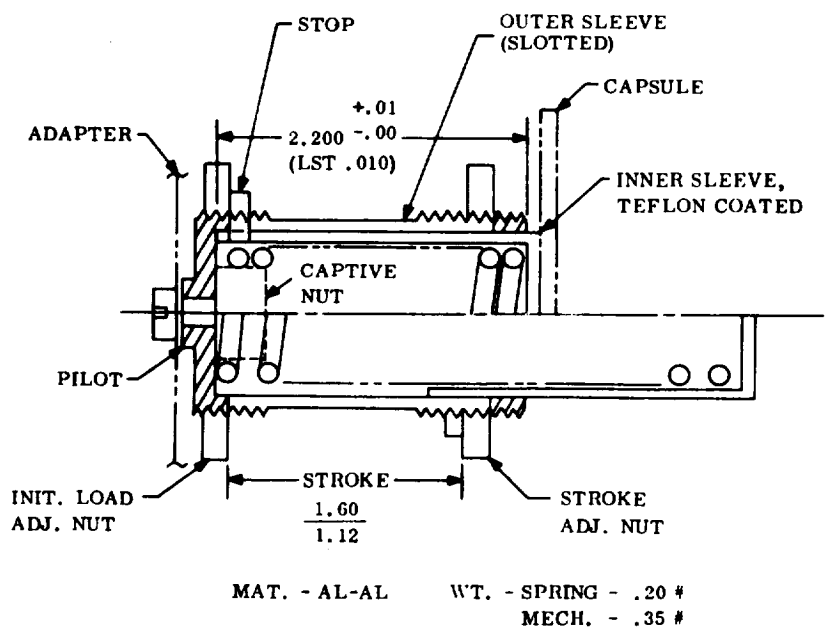

Figure 4.8-3. Spring Assembly

Silicone rubber was selected because it has the best low temperature properties -- rated to -80°F for seals, but doesn't harden until -150 to -180°F. Therefore, it is expected that the seal will degrade during the space cruise. If it is mandatory that a seal be maintained, then thermal insulation could be applied to the band to keep the temperature above -150°F.

The ability of the separation joint to inhibit the penetration of bacteria is further enhanced by the tortuous path which they must follow to gain entry into the Capsule. The slipper is in full contact with the ring except for a 1/4 in. gap between the 5.75-in. long slippers, or a total of 96 percent of the circumference is covered by the slippers. The band, of course, covers the entire circumference except at openings for the hot-wire bolts, which probably will be about 1-1/2 in. long each, or 94.5 percent band coverage.

4.8.5.1.2 Spacecraft Separation

The Spacecraft is attached to the adapter by eight explosive nuts, each having dual cartridges (see fig. 4.8-4). The explosive nut is of the captive type, with all loose pieces contained within the unit. The gas generated by the squibs is also contained. The choice of the explosive nut was made because of its reliability, capability for dual squib ignition, low weight, and high load carrying capacity. To support the Spacecraft weights of 2623 lb for the direct link Lander and 2489 lb for the deflected flyby, eight 1/4-in. explosive nuts were provided at the eight pick-up points on the Spacecraft structure. Spacecraft ejection is accomplished by eight helical coil compression springs, which impart a Spacecraft separation velocity of approximately 1.15 fps.

The weight of this Separation Subsystem is 6.4 lb.

4.8.5.1.3 Entry Vehicle Separation

The main consideration for Capsule separation and ejection was for close control of the tip-off rate. To meet this, it is necessary that the impulse generated by the separation device be either very low or nearly the same at all points. Likewise the ejection system must have controlled force and energy, with low variances; and the center of gravity offsets and ejection system force axes must be controlled.

Separation devices that meet the above needs are ball-locks, collet releases and explosive nuts. The latter was chosen because of their compactness and ease of use and installation. All of the above utilize pressure cartridges for operation, and for high reliability dual cartridges will be used. This introduces the problem of wide inpulse variance as a function of gas pressure (a function of cartridge design, simultaneity and number of cartridges firing).

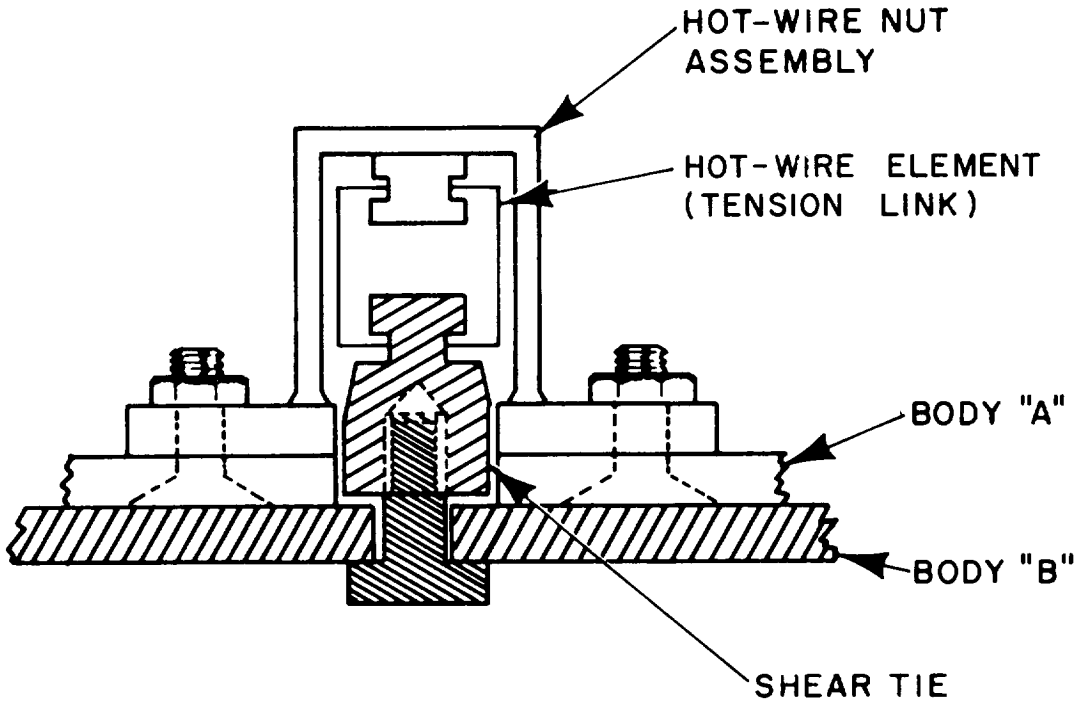

CROSS-HATCHED PARTS REMAIN TOGETHER AT SEPARATION.
SHEAR TIE ADAPTER IS PART OF NUT ASSEMBLY INITIALLY

Figure 4.8-4. Hot-Wire Separation Nut

The ejection systems that are available are pneumatic pistons, pyrotechnic thrusters, reaction systems and springs. Springs were selected for their obvious simplicity. To minimize tip-off rates, the energy and force of the ejection system must be controlled. The proposed solution uses preset springs in an energy package, with selective assembly and gives a maximum tip-off rate of 0.25°/sec when the maximum and minimum spring forces are combined with the worst case center of gravity offset.

The Capsule is attached to the adapter by four 1/4-in. explosive nuts, of the type described in para 4.8.5.1 and shown on fig. 4.8-4. Four nuts are provided at the four pickup points on the structure.

Capsule ejection is accomplished by four helical coil compression springs of the type shown in fig. 4.8-3. The springs impart a separation velocity of 1.82 fps and 1.9 fps, respectively for the direct link and deflected flyby Landers. Tip-ff imparted to the Capsule will be approximately 0.20°/sec for the two Autonomous Landers. The subsystem will weigh 3.2 lb for either type Lander.

4.8.5.1.4 Aeroshell-Lander Separation

The aeroshell to Lander attachment utilizes four hot-wire separation nuts of the type previously described for the Spacecraft and Capsule separation systems. IFD's for electrical separation are of the self disconnect type.

The weight of the aeroshell separation system is 1.0 lb.

4.8.5.1.5 Parachute-Lander Separation

The parachute compartment will be secured to the payload by three explosive nuts, each having dual cartridges, attached to bolts passing through the attachment and tie-down fittings. These will be similar to the explosive nuts used for Capsule separation. The main parachute tie-down and deployment loads will be carried by these separation devices.

When the descending Lander is 150 ± 50 ft from the surface, a signal will be sent from the vehicle power supply to the explosive nuts. This will cause release of the parachute compartment/mortar assembly from the Lander. The Lander will free-fall to surface impact. The jettisoned main parachute will collapse and spill to one side due to the sudden release of loading from the suspension lines while the parachute was fully inflated.

5. WEIGHT STATEMENTS

5. WEIGHT STATEMENTS

5.1 AUTONOMOUS CAPSULE

5.1.1 WEIGHT SUMMARY AND EQUIPMENT LIST

The equipment and the weight composition of the Autonomous Capsule is given in the following tabulations for the Lander, Aeroshell, deceleration system, canister adapter and spin-stabilized Support Module. Fig. 5.1-1 is included to identify systems of the weight composition prepared. Table 5.1-1 gives the system mass properties at key events in the mission sequence to Lander operations. The Capsule reference axis for mass property data is shown in fig. 5.1-2.

5.1.1.1 Lander Detail Weight Statement

TRULY AUTONOMOUS

		Total Weight
	Structure	235.0
	Internal Webs	26.0
	Rings	38.0
	Honeycomb Torus	83.0
	Main Cylinder Wall and Supports	18.0
	Honeycomb Covers	40.0
	Miscellaneous and Fasteners	30.0

Quantity	Item	Total Weight
	Science Equipment	60.0
	(Entry)	
1	Mass Spectrometer	8.0
2	Resistance Thermometers	1.0
2	Variable Pressure Transducer	1.0
1	Triaxial Accelerometer	2.0
1	Water Vapor Detector	2.0
	(Surface)	
2	Facsimile	5.0
1	GCMS/Pyrolysis	16.0
1	Wolf Trap	8.0
1	Soil Sampler	2.0

Lander Weight (Continued)		Total Weight
2	Platinum Resistance Thermometer	1.0
2	Capacitance Diaphragm	1.4
2	Clinometer	2.6
2	Camera Deployment Mechanism	10.0
Telecommunications		110.1
4	Transmitters (100 W)	32.0
4	Exciters	20.0
4	Antenna	8.0
1	Transmitter (20 W)	7.0
1	Transponder/Exciter	22.0
1	Antenna (hi-gain)	6.0
3	Circulators	2.1
2	Antenna, S-band (lo-gain)	0.4
1	Command Detector	2.0
1	Conditioner, Signal Data	4.0
1	Multicoder	5.0
1	Impact Measurer	1.6
Electrical Power and Distribution		219.2
1	Battery	61.0
1	Battery	28.0
1	Charge Regulator	8.3
1	Voltage Regulator	8.0
1	Controller	12.4
1	Unit, Breaker and Limiter	3.5
4	Solar Array Panels	60.0
4	Solar Array Mechanism	10.0
AR	Harness	28.0
Control Equipment		7.3
2	Stepping Motors (Antenna)	4.0
3	Sun Sensors (Antenna)	0.6
1	Controller Motor (Antenna)	1.3
1	Electronics, Sensors	1.0
1	Temperature Detector	0.2
1	Temperature Control	0.2
Computer and Sequencing		19.0
1	Memory Unit	5.0

Lander Weight (Continued)	Total Weight
1 Processor and Sequencer	4.0
1 Programmer	7.0
1 Command Decoder	3.0
Environmental Control (Passive)	25.0
Attenuation	280.0
Total Lander Weight	955.6

5.1.1.2 Aeroshell Detail Weight Statement

	Total Weight
Structure	264.4
Honeycomb Shell (0.885 & 1.018 psf locally)	132.0
Honeycomb Shell Closeout and Corefill	24.8
Shelf and Support Module Separation Ring	44.3
Lander Separation Ring and Supports	36.3
Miscellaneous and Fasteners	27.0
Heat Shield (35 PCF, ESM-1004 AP)	175.2

Quantity	Item	Total Weight
Entry Science		2.5
1	Stagnation Temperature Transducer	0.5
4	Stagnation Pressure Transducers	2.0
Electrical Power & Distribution		5.6
1	IFD Lander-A/S	0.9
1	IFD Capsule-S/C	1.2
8	Hot-wire Release	2.0
AR	Harness	1.5
Roll Control Sybsystem		32.1
1	Regulator	3.0
1	Initiator, De-spin	1.0

Aeroshell Weight (Continued)		Total Weight
1	Gyro, Rate	1.4
2	Valve, Solenoid Thrust	2.4
2	Reactor	3.0
1	Valve, Tank Squib	0.1
3	Valve	1.5
1	Helium Tank (with Gas)	3.0
1	Hydrazine Tank (with Gas)	15.0
2	Nozzles	0.2
AR	Lines	1.5
	Total Aeroshell Weight	479.8

5.1.1.3 Deceleration System Detail Weight Statement

	Total Weight
Pilot Parachute Mortar Thermal Cover	1.8
Pilot Extraction Parachute (Modified Ringsail)	7.2
Main Parachute Compartment Thermal Cover	8.0
Main Parachute, 2 Stage Deployment (Modified Ringsail)	195.0
Main Parachute Attachment Riser	2.0
Parachute Compartment, Including Mortar	15.0
Parachute Attachment and Tie-Down Fittings (3)	2.0
Compressed Gas Supply	4.0
Pull Apart Electric Disconnect	0.2
Hot-Wire Separation Device	2.0
Mach 2 Sensor	3.0
Total Deceleration System Weight	240.2

5.1.1.4 Adapter/Canister Detail Weight Statement

	Total Weight
Aft Canister/Adapter (Transtage End)	275.7
Structure	253.0
Adapter Structure	149.0
Canister	59.0
Separation Ring	15.0
Miscellaneous and Fasteners	30.0

Adapter/Canister Weight (Continued)		Total Weight
Quantity	Item	
Separation		6.4
8	Explosive Nuts	2.0
8	Springs	1.6
8	Spring Housings	2.8
Pressure and Venting		16.3
1	Pressure Control Valve	6.5
1	Biological Filter	4.5
2	Fan, Circulation	1.8
1	Fill Valve	2.5
AR	Tubing	1.0
Forward Canister		132.0
	Structure	116.0
	Canister	59.0
	Separation Ring	51.0
	Miscellaneous and Fasteners	6.0
	Separation	16.0
	V-band Assembly	14.3
	Hot-wire Bolts	0.8
	Springs	0.2
	Housings, Spring	0.7
	Total Adapter/Canister System Weight	407.7

5.1.1.5 Support Module Detail Weight Statement

	Total Weight
Structure	193.0
Outer Wall	26.0
Structural Rings	45.0
Honeycomb Fixed Solar Array Panel	91.0
Truss Tubes and Fittings	13.0

Support Module Weight (Continued)			Total Weight
	Miscellaneous and Fasteners		18.0

Quantity	Item	Reference	Total Weight
Radio			45.0
2	Exciters	MM '69	9.0
2	Power Amplifiers	MM'69	21.0
1	Low Gain Antenna	New Item	1.0
AR	Controls, Switches, Harness	New Item	14.0
Telemetry			9.0
1	Commutator and Power Supply	MM '69	9.0
Attitude Control			15.0
1	Star Sensor	New Item	6.0
1	Sun Sensor	New Item	1.0
1	Damper	New Item	2.0
AR	Electronics	New Item	6.0
Power Supply			110.0
1	Battery	MM '69	31.0
1	Battery Charge and Boost Control	MM '69	2.0
2	Boost Regulators	MM '69	12.0
AR	2.4 kHz Invertors	MM '69	6.0
1	Power Source Logic	MM '69 (Modified)	8.0
	Control and Distribution	New Items	7.0
	(72 ft^2 Total) Solar Cells (Panel in Structural Weight)		44.0
Propulsion			77.2
4	Thrust Chamber Assemblies	ATS-C, D & E	2.5
AR	Propellant Tanks	New Items	3.8
AR	Pressurant Tanks	New Items	5.0
AR	Structural Supports and Brackets	New Items	5.5
AR	Lines, Valves, Regulators, Etc.	New Items	12.0
AR	Propellant and Pressurant		47.0
AR	Residual Propellant and Pressurant		1.4

Support Module Weight (Continued)	Reference	Total Weight
Pyrotechnics		10.0
2 Pyro Controllers	MM '69	9.0
AR Squibs		1.0
Mechanical Devices		14.0
AR Separation Mechanisms (From Spacecraft Adapter)		13.0
AR Switches and Timers	MM '69 (Modified)	1.0
Temperature Control		16.0
AR Heaters	New Items	3.0
AR Shields, Blankets, Finishes	New Items	8.0
AR Louver Assembly	MM '69 (Modified)	5.0
Cabling		29.0
AR Spacecraft Disconnect	New Item	6.0
AR Harness	New Item	23.0
	Total Support Module Weight	518.2

TABLE 5.1-1 MISSION SEQUENCE MASS PROPERTIES

	Weight (lb)	Center of Gravity			Mass Moments of Inertia (slug-ft^2**)		
		Z *Roll	X Pitch	Y Yaw	Roll	Pitch	Yaw
A. Spacecraft Launch Weight	2601.5	47.1	0.01	-0.07	864	570	573
B. Spacecraft Injection Weight	2469.5	47.2	0.01	-0.07	746	513	516
C. Spacecraft Cruise Weight	2193.8	43.5	0.01	-0.08	559	354	357
D. Entry Weight	1675.6	38.5	0.01	-0.11	334	204	206
E. Decelerated Weight	1195.8	41.8	0.02	-0.16	94	64	67
F. Lander Weight	955.6	38.2	0.03	-0.20	86	47	50

*Distance from apex of aeroshell. **Taken about the center-of-gravity.

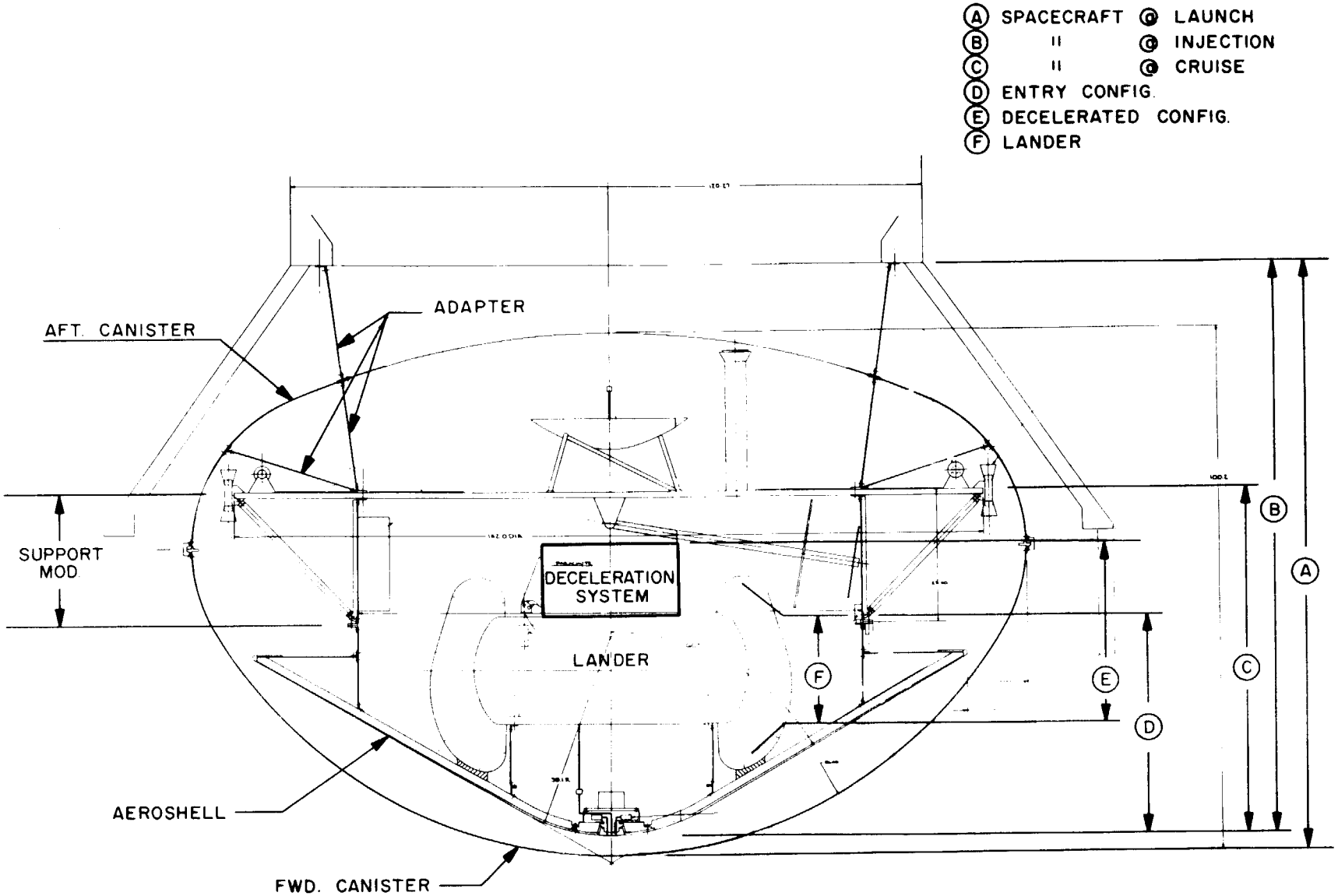

Figure 5.1-1. Mars Hard Lander Deflected Relay

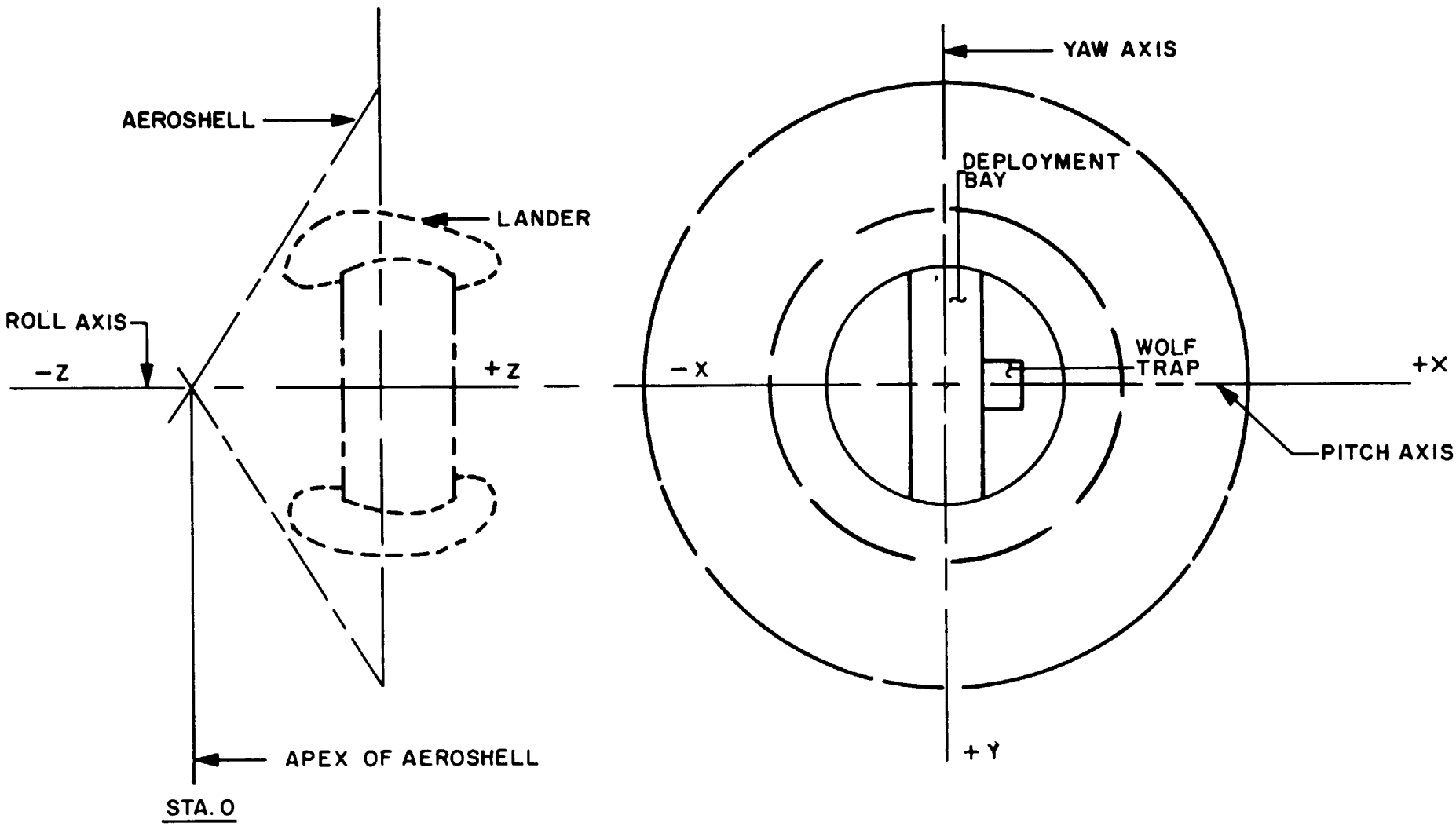

Figure 5.1-2. Mass Properties Reference Axis

5.2 DIRECT ENTRY LANDER WITH DEFLECTED RELAY SUPPORT MODULE

5.2.1 WEIGHT SUMMARY AND EQUIPMENT LIST

The equipment list and weight for the Direct Entry Lander and deflected Support Module is given in the following tabulations for Lander, Aeroshell, deceleration system, canister adapter, and spin-stabilized Support Module. Table 5.2-1 gives the system mass properties at key events in the Mars mission.

Fig. 5.2-1 is included to graphically identify the weights. The coordinate system for the mass properties are shown in fig. 5.1-2.

5.2.1.1 Lander Detail Weight Statement

DIRECT ENTRY LANDER WITH DEFLECTED RELAY SUPPORT MODULE

Item	Total Weight
Structure	213.0
Internal Webs	24.0
Rings	35.0
Honeycomb Torus	78.0
Main Cylinder Walls and Supports	16.0
Honeycomb Covers	32.0
Miscellaneous and Fasteners	28.0

Quantity	Item	Total Weight
	Science Equipment	60.0
	(Entry)	
1	Mass Spectrometer	8.0
2	Resistance Therometers	1.0
2	Variable Pressure Transducer	1.0
1	Triaxial Accelerometer	2.0
1	Water Vapor Detector	2.0
	(Surface)	
2	Facsimile Cameras	5.0
1	GCMS/Pyrolysis	16.0
1	Wolf Trap	8.0
1	Soil Sampler	2.0

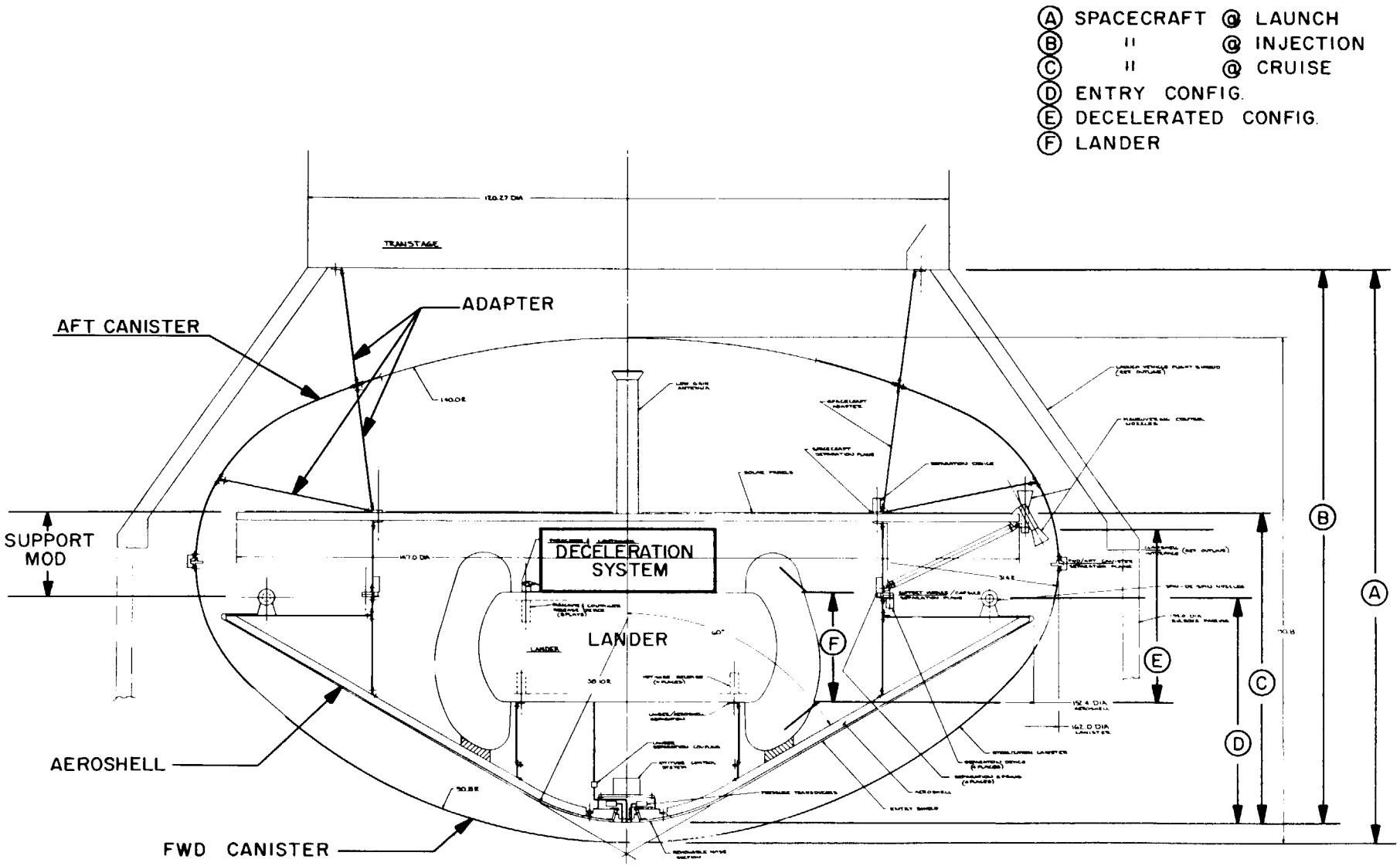

Figure 5.2-1. Mars Hard Lander Direct Link

Lander Weight (Continued)		Total Weight
2	Platinum Resistance Thermometer	1.0
2	Capacitance Diaphragm	1.4
2	Clinometer	2.6
2	Camera Deployment Mechanism	10.0
Telecommunications		56.0
1	Transmitter, UHF	2.5
1	Conditioner, Signal Data	4.0
2	Antenna, UHF Relay	2.0
1	Switch, Antenna	0.1
1	Multicoder	5.0
1	Impact Measurer	1.6
1	Transmitter, S-band	7.0
2	Antenna, S-band Transmitter	1.0
1	Transponder/Exciter	22.0
2	Antenna, S-band Receiver	0.4
2	Circulator, S-band	1.4
1	Antenna, S-band Transmitter	7.0
1	Command Detector	2.0
Electrical Power and Distribution		169.0
1	Battery, Operational	67.6
1	Regulator, Voltage	8.0
1	Controller, Power	9.0
2	Battery, Hi-rate	1.0
1	Unit, Breaker and Limiter	3.0
4	Solar Array Panels	37.6
4	Solar Array, Mechanical	10.0
1	Regulator, Charge	7.8
AR	Harness	25.0
Control Equipment		7.3
2	Stepping Motors (Antenna)	4.0
1	Controller, Motor (Antenna)	1.3
3	Sun Sensors (Antenna)	0.6
1	Electronics, Sensors	1.0
1	Temperature Detector	0.2
1	Temperature Control Unit	0.2

Lander Weight (Continued)	Total Weight
Computer and Sequencing	19.0
1 Memory Unit	5.0
1 Processor and Sequencer	4.0
1 Programmer	7.0
1 Command Decoder	3.0
Environmental Control (Passive)	25.0
Attenuation	260.0
Total Lander Weight	809.3

5.2.1.2 Aeroshell Detail Weight Statement

	Total Weight
Structure	217.3
Honeycomb Shell (0.885 psf and 1.018 psf Locally)	102.1
Honeycomb Shell Closeout and Corfill	22.3
Shelf and Support Module Separation Ring	36.5
Lander Separation Ring and Supports	33.4
Miscellaneous and Fasteners	23.0
Heat Shield (35 PCF 1004 AP)	144.6

Quantity	Item	Total Weight
Entry Science		2.5
1	Stagnation Temperature Transducer	0.5
4	Stagnation Pressure Transducer	2.0
Electrical Power and Distribution		11.8
2	Battery	2.0
1	Controller	1.5
8	Hot-wire Release	2.0
1	IFD, Lander-A/S	0.9
1	IFD, Capsule-S/C	1.2
AR	Harness	4.2

Adapter/Canister Weight (Continued)		Total Weight
Cabling		41.0
AR Spacecraft Disconnect	New Item	6.0
AR Harness	New Item	35.0
Support Module Weight		639.2

TABLE 5.2-1 MISSION SEQUENCE MASS PROPERTIES

	Weight (lb)	Center-of-Gravity			Mass Moments of Inertia (slug-ft^2**)		
		Z *Roll	X Pitch	Y Yaw	Roll	Pitch	Yaw
A. Spacecraft Launch Weight	2471.8	48.6	0.15	-0.26	773	594	594
B. Spacecraft Injection Weight	2335.0	48.7	0.16	-0.27	646	532	532
C. Spacecraft Cruise Weight	2065.4	44.8	0.18	-0.30	476	373	373
D. Entry Weight	1426.2	35.7	0.26	-0.44	241	156	156
E. Decelerated Weight	1011.5	39.1	0.36	-0.61	74	55	55
F. Lander Weight	809.3	35.1	0.45	-0.77	67	37	36

*Distance from apex of aeroshell. **Taken about the center-of-gravity

Lander Weight (Continued)	Total Weight
Computer and Sequencing	19.0
1 Memory Unit	5.0
1 Processor and Sequencer	4.0
1 Programmer	7.0
1 Command Decoder	3.0
Environmental Control (Passive)	25.0
Attenuation	260.0
Total Lander Weight	809.3

5.2.1.2 Aeroshell Detail Weight Statement

	Total Weight
Structure	217.3
Honeycomb Shell (0.885 psf and 1.018 psf Locally)	102.1
Honeycomb Shell Closeout and Corfill	22.3
Shelf and Support Module Separation Ring	36.5
Lander Separation Ring and Supports	33.4
Miscellaneous and Fasteners	23.0
Heat Shield (35 PCF 1004 AP)	144.6

Quantity	Item	Total Weight
Entry Science		2.5
1	Stagnation Temperature Transducer	0.5
4	Stagnation Pressure Transducer	2.0
Electrical Power and Distribution		11.8
2	Battery	2.0
1	Controller	1.5
8	Hot-wire Release	2.0
1	IFD, Lander-A/S	0.9
1	IFD, Capsule-S/C	1.2
AR	Harness	4.2

Aeroshell Weight (Continued)		Total Weight
Roll Control Subsystem		38.5
2	Fill Valve	1.0
1	Helium Tank (Including Gas)	3.0
2	Explosive Valve	0.8
1	Hydrazine Tank (With Propellant)	15.0
2	Filters	1.2
4	Solenoid Valves	6.0
4	Nozzles	0.4
1	Roll Rate Controller	2.5
1	Roll Rate Gyro	1.4
1	Squib Firing Module	0.5
2	Solenoid Drivers	0.7
1	Pressure Regulator	3.0
AR	Lines	3.0
	Total Aeroshell Weight	414.7

5.2.1.3 Deceleration System Detail Weight Statement

Pilot Parachute Mortar Thermal Cover	1.5
Pilot Extraction Parachute (Modified Ringsail)	6.5
Main Parachute Compartment Thermal Cover	6.0
Main Parachute, 2 Stage Deploy (Modified Ringsail)	163.0
Main Chute Attachment Riser	2.0
Parachute Compartment Including Mortar	13.0
Parachute Attachment and Tie-down Fittings (3)	2.0
Compressed Gas Supply	3.0
Pull-apart Electric Disconnect	0.2
Hot-wire Separation Device	2.0
Mach 2 Sensor	3.0
Total Deceleration System Weight	202.2

5.2.1.4 Adapter/Canister Detail Weight Statement

Aft Canister/Adapter (Transtage End)	269.5
Structure	244.0
Adapter Structure	146.0
Canister	58.0
Separation Ring	15.0

Adapter/Canister Weight (Continued)	Total Weight
Miscellaneous and Fasteners	25.0
Quantity Item	
Separation	6.4
8 Explosive Nuts	2.0
8 Springs	1.6
8 Housings, Spring	2.8
Pressure & Venting	19.1
1 Valve, Vent	8.1
2 Fans, Circulation	1.8
1 Fill Valve	2.5
1 Filter	5.7
AR Tubing	1.0
Forward Canister	136.9
Structure	120.0
Canister	63.0
Separation Ring	50.0
Miscellaneous and Fasteners	7.0
Separation	16.9
1 V-band Assembly	14.3
4 Hot-wire Bolts	0.8
4 Springs	0.4
4 Housings, Spring	1.4
Total Adapter/Canister System Weight	406.4

5.2.1.5 Support Module Detail Weight Statement

	Total Weight
Structure	213.0
Outer Wall	47.0
Structural Rings	45.0

Support Module Weight (Continued)			Total Weight
	Honeycomb Fixed Solar Array Panel		85.0
	Truss Tubes and Fittings		14.0
	Miscellaneous and Fasteners		22.0
Qty.	**Item**	**Reference**	
Radio			**56.0**
2	Exciter	MM '69	9.0
2	Power Amplifiers	MM '69	21.0
1	Low Gain Antenna	New Item	1.0
1	Receiver	MM '69	8.0
1	High Gain Antenna	New Item	3.0
AR	Controls, Switches, Cables	New Item	14.0
Command			**8.0**
1	Detector	MM '69	3.0
1	Decoder and Power Supply	MM '69	5.0
Telemetry			**22.0**
1	Commutator and Power Supply	MM '69	9.0
1	Timing Generator	MM '69	2.0
1	Data Processor	MM '69	2.0
1	A/D Convertor	MM '69	3.0
1	Transfer Register	MM '69	2.0
1	Mode and Rate Control	MM '69	2.0
1	Programmer	MM '69	2.0
Relay			**3.0**
1	Receiver	Hard Lander Final	1.0
1	Antenna	Report Appendix D	2.0
Attitude Control			**15.0**
1	Star Sensor	New Item	6.0
2	Sun Sensors	New Item	1.0
1	Damper	New Item	2.0
1	Electronics Unit	New Item	6.0

Adapter/Canister Weight (Continued)			Total Weight
Power Supply			110.0
1	Battery	MM '69	31.0
1	Battery Charge and Boost Control	MM '69	2.0
2	Boost Regulators	MM '69	12.0
AR	2.4 kHz Inverters	MM '69	6.0
1	Power Source Logic	MM '69 (Modified)	8.0
	Control and Distribution	New Items	7.0
	(72 ft^2 Total) Solar Cells (Panel in Structural Weight)		44.0
Computer & Sequencing			24.0
1	Timing and Event Control	MM '69	13.0
1	Memory	MM '69	4.0
1	Power Supply	MM '69	7.0
Propulsion			95.2
5	Thrust Chamber Assembly	A.T.S.-C, D, & E	2.0
AR	Propellant Tanks	New Item	5.5
AR	Pressurant Tanks	New Item	6.7
AR	Structural Supports and Brackets	New Item	6.1
AR	Lines, Valves, Regulators, etc.	New Item	10.0
AR	Pressurant and Propellant		63.0
AR	Residual Propellant and Pressurant		1.9
Pyrotechnics			10.0
2	Pyro Controller	MM '69	9.0
AR	Squibs		1.0
Mechanical Devices			19.0
AR	Separation Mechanics (from Spacecraft Adapter)		13.0
AR	Switches and Timers	MM '69 (Modified)	1.0
1	Relay Antenna Deployment Mechanisms	New Item	5.0
Temperature Control			23.0
AR	Heaters	New Item	3.0
AR	Shields, Blankets, Finishes	New Item	12.0
AR	Louver Assembly	MM '69 (Modified)	8.0

Adapter/Canister Weight (Continued)		Total Weight
Cabling		41.0
AR Spacecraft Disconnect	New Item	6.0
AR Harness	New Item	35.0
Support Module Weight		639.2

TABLE 5.2-1 MISSION SEQUENCE MASS PROPERTIES

	Weight (lb)	Center-of-Gravity			Mass Moments of Inertia (slug-ft^2**)		
		Z *Roll	X Pitch	Y Yaw	Roll	Pitch	Yaw
A. Spacecraft Launch Weight	2471.8	48.6	0.15	-0.26	773	594	594
B. Spacecraft Injection Weight	2335.0	48.7	0.16	-0.27	646	532	532
C. Spacecraft Cruise Weight	2065.4	44.8	0.18	-0.30	476	373	373
D. Entry Weight	1426.2	35.7	0.26	-0.44	241	156	156
E. Decelerated Weight	1011.5	39.1	0.36	-0.61	74	55	55
F. Lander Weight	809.3	35.1	0.45	-0.77	67	37	36

*Distance from apex of aeroshell. **Taken about the center-of-gravity