General Disclaimer

One or more of the Following Statements may affect this Document

- This document has been reproduced from the best copy furnished by the organizational source. It is being released in the interest of making available as much information as possible.

- This document may contain data, which exceeds the sheet parameters. It was furnished in this condition by the organizational source and is the best copy available.

- This document may contain tone-on-tone or color graphs, charts and/or pictures, which have been reproduced in black and white.

- This document is paginated as submitted by the original source.

- Portions of this document are not fully legible due to the historical nature of some of the material. However, it is the best reproduction available from the original submission.

Produced by the NASA Center for Aerospace Information (CASI)

NATIONAL AERONAUTICS AND SPACE ADMINISTRATION

Technical Memorandum 33-402

Proceedings of the Spacecraft Electromagnetic Interference Workshop

Held at the Jet Propulsion Laboratory
Pasadena, California
February 6-8, 1968

2H1

Edited by
Joseph G. Bastow

MAY 1969
RECEIVED
NASA STI FACILITY
INPUT BRANCH

N69-25426 (ACCESSION NUMBER)
N69-25447 (THRU)
254 (PAGES)
1 (CODE)
CR 100697 (NASA CR OR TMX OR AD NUMBER)
10 (CATEGORY)
FACILITY FORM 602

JET PROPULSION LABORATORY
CALIFORNIA INSTITUTE OF TECHNOLOGY
PASADENA, CALIFORNIA

December 15, 1968

5P1-57396

NATIONAL AERONAUTICS AND SPACE ADMINISTRATION

Technical Memorandum 33-402

Proceedings of the Spacecraft Electromagnetic Interference Workshop

Held at the Jet Propulsion Laboratory
Pasadena, California
February 6-8, 1968

Edited by
Joseph G. Bastow

JET PROPULSION LABORATORY
CALIFORNIA INSTITUTE OF TECHNOLOGY
PASADENA, CALIFORNIA

December 15, 1968

JPL TECHNICAL MEMORANDUM 33-402

Copyright © 1969
Jet Propulsion Laboratory
California institute of Technology

Prepared Under Contract No. NAS 7-100
National Aeronautics and Space Administration

Preface

The Spacecraft Electromagnetic Interference Workshop was held to permit an exchange of ideas and experiences peculiar to the design, integration, testing, and operation of spacecraft. Although the scientific experimenter is also a participant in each of these phases, there has been only a limited amount of exchange between the spacecraft and launch vehicle personnel and the scientific experimenters. It was particularly desired to bridge this information exchange gap with this workshop.

The spark which ignited interest in this workshop was a realization, by the *Mariner* Venus 67 Program and Project offices, that it was only through special efforts and a great deal of cooperation between the spacecraft engineers and the experimenters that the electromagnetic interference problems of that program had been solved, resulting in a successful flight. Until that time, the value of a thorough electromagnetic interference program had not been fully realized by either project management or experimenters. Presentations at the workshop by spacecraft and vehicle engineers and experimenters forced recognition of the disparity between the various concepts of spacecraft electromagnetic interference and, at the same time, narrowed the information gap between these groups.

It is believed that these workshop proceedings will furnish valuable information on the problems associated with the integration of hardware on spacecraft, especially concerning the scientific experiments, that is not readily available elsewhere. The practical experiences related in several papers also highlight problems that are peculiar to the aerospace industry. It is hoped that all workshop participants will find here material of continuing interest and value.

As with earlier workshops at JPL, the entire proceedings were recorded so that all information exchanged and presented could be documented and made available to the participants. Although it was desired that the workshop cover the practical aspects of electromagnetic interference and not be too formal in nature, it was felt that formal presentations would be necessary to stimulate and serve as a framework for the general question and discussion periods following each presentation. For the majority of the papers presented, formal manuscripts have been furnished for publication in these proceedings. The few remaining presentations were obtained from the recordings made at the workshop. Similarly, supplemental remarks made by the various authors and the questions and discussions from the audience have been extracted from these recordings for publication. Between the various typists giving their interpretation to the spoken word, my attempts to make it look intelligible in print, and the technical editors' efforts to make it sound better, it is hoped that we have not misconstrued the intent of any speaker. If we have, I ask for your forbearance.

I wish to thank all those who attended this workshop and particularly those who gave of their time in preparing for and presenting a paper at the workshop. Also, thanks are due those who handled the workshop arrangements and correspondence and contributed to the final publication of these proceedings.

J. G. Bastow
Workshop Chairman

List of Attendees

Abernathy, O. Ray
TRW Systems, Inc., Redondo Beach, Calif.
Alpaugh, Mark H.
Ball Brothers Research Corporation,
Boulder, Colo.
Arveson, D. R.
Hughes Aircraft Company,
Los Angeles, Calif.
Ayre, T. P.
General Electric Company, Houston, Tex.

Barrows, William F.
NASA Ames Research Center,
Moffett Field, Calif.
Bastow, Joseph G.
Jet Propulsion Laboratory, Pasadena, Calif.
Beran, Everett W.
Jet Propulsion Laboratory, Pasadena, Calif.
Berg, A. F.
Hughes Aircraft Company,
El Segundo, Calif.
Bergay, Ruben
TRW Systems, Inc., Redondo Beach, Calif.
Boreham, James F.
Jet Propulsion Laboratory, Pasadena, Calif.
Bowman, Allen P.
Jet Propulsion Laboratory, Pasadena, Calif.
Bridgeforth, Arthur
Electro-Optical Systems, Inc.,
Pasadena, Calif.
Bryner, John C.
Space Division, North American Rockwell
Corporation, Downey, Calif.
Burkhardt, George N.
Hughes Aircraft Company,
El Segundo, Calif.
Burtchaell, K. R.
Lockheed-California Company,
Burbank, Calif.
Buterbaugh, John N.
Hughes Aircraft Company,
El Segundo, Calif.
Butts, Aubrey J.
Denver Division, Martin-Marietta
Corporation, Denver, Colo.

Carlson, B. Leonard
Boeing Company, Seattle, Wash.
Case, Richard
Jet Propulsion Laboratory, Pasadena, Calif.
Clarke, Arthur C.
NASA/GSFC Representative at TRW
Systems, Inc., Redondo Beach, Calif.
Clavell, George H.
TRW Systems, Inc., Redondo Beach, Calif.
Coburn, John E.
General Electric Company,
Los Angeles, Calif.
Coleman, William J.
Space Division, North American Rockwell
Corporation, Downey, Calif.
Collins, Richard G.
TRW Systems, Inc., Redondo Beach, Calif.
Connor, Benjamin V.
Jet Propulsion Laboratory, Pasadena, Calif.
Conroy, Martin J.
NASA Lewis Research Center,
Cleveland, Ohio
Cooper, Herbert W.
Naval Research Laboratory,
Washington, D.C.
Cooper, J. W.
McDonnell Douglas Corporation,
Huntington Beach, Calif.
Cooperstein, Bernard D.
TRW Systems, Inc., Redondo Beach, Calif.
Cripps, George A.
Bendix Aerospace Systems Division,
Ann Arbor, Mich.
Crosby, Donald F.
Space Research Laboratory, University of
Michigan, Ann Arbor, Mich.

Davis, Donald S.
Hughes Aircraft Company,
Culver City, Calif.
Davis, John J.
Electro-Optical Systems, Inc.,
Pasadena, Calif.
Donahue, John J.
Hughes Aircraft Company,
Los Angeles, Calif.
Dorband, Allen E.
Boeing Company, Seattle, Wash.
Draper, Ronald F.
Jet Propulsion Laboratory, Pasadena, Calif.
Dryer, E. J.
Space Division, North American Rockwell
Corporation, Downey, Calif.

Ellison, Robert W.
Denver Division, Martin-Marietta
Corporation, Denver, Colo.
Emory, Thomas W.
Bendix Communications Division
Representative at Martin-Marietta Corp.,
Denver, Colo.
Epp, A. A.
Space Division, North American Rockwell
Corporation, Downey, Calif.

Fischer, J. F., Jr.
Genistron Division, Genisco Technology
Corporation, Compton, Calif.
Frandsen, Allan M. A.
Jet Propulsion Laboratory, Pasadena, Calif.
Frankos, D. T.
Jet Propulsion Laboratory, Pasadena, Calif.
Freud, Edgar L.
Kearfott Group, General Precision Systems
Inc., Little Falls, N. J.
Frye, James F.
IBM Corporation, Oswego, N. Y.
Funke, F. E.
North American Rockwell Corporation,
Downey, Calif.

George, F. Robert
Space Science Center, University of
California at Los Angeles, Calif.
Gibson, John G.
Philco-Ford Corporation, Palo Alto, Calif.
Gilchrist, Allan
Erie Technological Products, Trenton,
Ontario, Canada
Guyader, Henri W.
Convair Division, General Dynamics Corp.,
San Diego, Calif.

Harvey, W. L.
Denver Division, Martin-Marietta
Corporation, Denver, Colo.
Hastings, Chet
Honeywell, Inc., Minneapolis, Minn.
Haywood, V. E.
TRW Systems, Inc., Redondo Beach, Calif.
Heritage, H. A.
Aerospace Corporation, El Segundo, Calif.
Hill, Robert E.
Electro-Optical Systems, Inc.,
Pasadena, Calif.
Hoberg, Otto A.
NASA Marshall Space Flight Center,
Huntsville, Ala.
Hoffart, Henry M.
General Electric Company,
Valley Forge, Pa.
Horwood, Daniel F.
Hughes Aircraft Company,
Culver City, Calif.
Howard, H. T.
Stanford Electronics Laboratories,
Stanford, Calif.
Huffman, Walter O.
NASA, J. F. Kennedy Space Center, Fla.
Hughes, Eldon S.
Autonetics Division, North American
Rockwell Corporation, Fullerton, Calif.

Jacquette, James H.
Grumman Aircraft Company,
Bethpage, N. Y.
Jambor, Larry O.
Ball Brothers Research Corporation,
Boulder, Colo.

List of Attendees (contd)

Jeris, Edwin S.
NASA Lewis Research Center,
Cleveland, Ohio
Johnson, William R.
TRW Systems, Inc., Redondo Beach, Calif.
Johnston, Thomas K.
Jet Propulsion Laboratory, Pasadena, Calif.
Jourdan, Otto L.
Honeywell, Inc., Minneapolis, Minn.

Keeler, Louis H.
Jet Propulsion Laboratory, Pasadena, Calif.
Kelkenberg, Richard H.
Lockheed Missiles and Space Company,
Sunnyvale, Calif.
Kemle, David
Boeing Company, Washington, D.C.
King, Robert L.
TRW Systems, Inc., Redondo Beach, Calif.
King, William
Aerospace Division, Westinghouse
Corporation, Baltimore, Md.
Knight, Tommie J.
NASA, J. F. Kennedy Space Center, Fla.
Knoll, René S.
Observatoire de Paris, Paris, France
Koralewski, Robert A.
Boeing Company, Houston, Tex.
Kramer, Paul W.
TRW Systems, Inc., Redondo Beach, Calif.
Kudrna, K. L.
Ball Brothers Research Corporation,
Boulder, Colo.

Lamborn, Nate
Ball Brothers Research Corporation,
Boulder, Colo.
Lane, Winford J.
Jet Propulsion Laboratory, Pasadena, Calif.
Lash, William
McDonnell Douglas Corporation,
Huntington Beach, Calif.
LeDoux, Larry
Technical Wire Products, Inc.,
Santa Barbara, Calif.
Leland, Ronald F.
Motorola, Inc., Scottsdale, Ariz.
Lewis, Robert O., Jr.
Boeing Company, Seattle, Wash.
Lie, H. P.
Bell Telephone Laboratories, Inc.,
Murray Hill, N. J.
Long, Roy A.
Stanford Research Institute,
Palo Alto, Calif.
Lucey, R. T.
Hughes Aircraft Company,
Los Angeles, Calif.

Markowitz, H.
Electronic Leasing Corporation,
El Paso, Tex.
Maruna, Frank A.
NASA Lewis Research Center,
Cleveland, Ohio
Maskasky, John A.
NASA Goddard Space Flight Center,
Greenbelt, Md.
Maynard, Everett E.
NASA Ames Research Center,
Moffett Field, Calif.
McClanahan, J. T.
NASA Headquarters, Washington, D.C.
Michaels, Paul
Bendix Research Laboratory, Detroit, Mich.
Miller, Calvin E.
TRW Systems, Inc., Redondo Beach, Calif.
Miller, G. L.
Bell Telephone Laboratories, Inc.,
Murray Hill, N.J.
Mohan, Terrance J.
Bendix Research Laboratory, Detroit, Mich.
Monroe, Paul P.
Space Division, North American Rockwell
Corporation, Downey, Calif.
Montgomery, Lawrence C.
Jet Propulsion Laboratory, Pasadena, Calif.
Moore, M. Lloyd
Jet Propulsion Laboratory, Pasadena, Calif.
Mosher, Bruce H.
Motorola, Inc., Scottsdale, Ariz.
Murphy, Everett J.
Hughes Aircraft Company,
Culver City, Calif.

Ness, H. C.
McDonnell Douglas Corporation,
Huntington Beach, Calif.
Nezhni, Nathan N.
Jet Propulsion Laboratory, Pasadena, Calif.
Nichols, Fred J.
LectroMagnetics, Inc., Los Angeles, Calif.
Norman, Roy H.
Ampex Corporation, Los Angeles, Calif.

Obleman, Robert J.
McDonnell Douglas Corporation,
Huntington Beach, Calif.
O'Meara, Thomas J.
Grumman Aircraft Company,
Bethpage, N.Y.
Ottinger, Guy L.
Lockheed Missiles and Space Company,
Sunnyvale, Calif.
Owen, William A.
Jet Propulsion Laboratory, Pasadena, Calif.

Palmer, Clyde W.
Hughes Aircraft Company,
El Segundo, Calif.
Pangburn, Larry R.
Grumman Aircraft Company,
Bethpage, N.Y.
Paulos, Louis B.
Jet Propulsion Laboratory, Pasadena, Calif.
Peltzer, Robert G.
Space Physics Research Laboratory,
University of Michigan, Ann Arbor, Mich.
Pickering, William H.
Jet Propulsion Laboratory, Pasadena, Calif.
Ploszaj, Ronald
Jet Propulsion Laboratory, Pasadena, Calif.
Posta, Stephen J.
NASA Lewis Research Center,
Cleveland, Ohio

Quinn, James A.
Kearfott Group, General Precision
Systems Inc., Little Falls, N.J.
Quitter, John P.
NASA Lewis Research Center,
Cleveland, Ohio

Ragsdale, George C.
Jet Propulsion Laboratory, Pasadena, Calif.
Randolph, James E.
Jet Propulsion Laboratory, Pasadena, Calif.
Rechavi, Jacob
Harvard College Observatory,
Cambridge, Mass.
Reiff, Glenn A.
NASA Headquarters, Washington, D.C.
Reyes, Reynaldo
Space Division, North American Rockwell
Corporation, Downey, Calif.
Rogers, Philip R.
General Electric Company,
Philadelphia, Pa.
Roux, Gerald R.
Boeing Company, Huntsville, Ala.
Rufus, David
Aerospace Corporation, El Segundo, Calif.

Sabaroff, Sam
Hughes Aircraft Company,
El Segundo, Calif.
Saran, Gurdip S.
Hughes Aircraft Company,
El Segundo, Calif.
Scalingi, Vincent J.
Hughes Aircraft Company,
Los Angeles, Calif.
Scarf, Frederick L.
TRW Systems, Inc., Redondo Beach, Calif.

List of Attendees (contd)

Scheirman, Carl F.
Standard Electronics Company,
Chicago, Ill.
Schenker, Bernard
Lockheed Missiles and Space Company,
Sunnyvale, Calif.
Schiowitz, Harold H.
Rocketdyne Division, North American
Rockwell, Canoga Park, Calif.
Schmitt, Ralph G.
McDonnell Douglas Corporation,
Huntington Beach, Calif.
Schuette, Kim R.
TRW Systems, Inc., Redondo Beach, Calif.
Schult, R. W.
Aerospace Corporation, El Segundo, Calif.
Schultz, H. R.
Hughes Aircraft Company,
Culver City, Calif.
Shipley, William S.
Jet Propulsion Laboratory, Pasadena, Calif.
Simons, David H., Jr.
Hughes Aircraft Company,
Culver City, Calif.
Skocilich, Frank P.
Hughes Aircraft Company,
Los Angeles, Calif.
Smith, B. J.
IBM Corporation, San Jose, Calif.
Smith, Edward J.
Jet Propulsion Laboratory, Pasadena, Calif.
Smith, Frederick C.
Jet Propulsion Laboratory, Pasadena, Calif.
Smith, Hector M.
McDonnell Douglas Corporation,
Huntington Beach, Calif.
Smith, Morris
Space Division, North American Rockwell
Corporation, Downey, Calif.
Smith, Robert L.
Stanford Electronics Laboratories,
Stanford, Calif.
Snare, R. C.
Space Science Center, University of
California at Los Angeles, Calif.
Sohl, Gordon
Electro-Optical Systems, Inc.,
Pasadena, Calif.
Stott, David
Jet Propulsion Laboratory, Pasadena, Calif.
Stovall, John R.
IBM Corporation, Federal Systems
Division, Huntsville, Ala.
Strein, Eugene W.
University of California at San Diego,
La Jolla, Calif.
Sundberg, Glenn G.
Hughes Aircraft Company, Fullerton, Calif.
Swenson, David H.
Jet Propulsion Laboratory, Pasadena, Calif.

Takahashi, George M.
Electro-Optical Systems, Inc.,
Pasadena, Calif.
Taylor, Gerald R.
NASA Goddard Space Flight Center,
Greenbelt, Md.
Thomas, A. K.
TRW Systems, Inc., Redondo Beach, Calif.
Thornwall, Joseph C.
NASA Goddard Space Flight Center,
Greenbelt, Md.
Todd, Eugene G.
Hughes Aircraft Company,
Los Angeles, Calif.
Trimpi, Michael L.
Stanford Electronics Laboratory,
Stanford, Calif.

Van Ess, James
NASA Ames Research Center,
Moffett Field, Calif.
Vincent, Lloyd L.
Ling-Temco-Vought Inc., Michigan Div.,
Warren, Mich.

Walter, Thomas G.
TRW Systems, Inc., Redondo Beach, Calif.
Watson, Jack H.
McDonnell Douglas Corporation,
Culver City, Calif.
Watson, Pierce M.
TRW Systems, Inc., Redondo Beach, Calif.
Webb, William C., Jr.
USAF, Wright Patterson AFB,
Dayton, Ohio
Weinbaum, Ben
Convair Division, General Dynamics Corp.,
San Diego, Calif.
Wells, Robert F.
Hughes Aircraft Company,
Los Angeles, Calif.
Wengryn, Michael
Kollsman Instrument Corporation,
Syosset, N.Y.
Weygand, Allen G.
BellCom, Inc., Washington, D.C.
Whiteman, Donald M.
TRW Systems, Inc., Redondo Beach, Calif.
Whittlesey, Albert C.
Jet Propulsion Laboratory, Pasadena, Calif.
Wilbur, Donald
Hughes Aircraft Company, Fullerton, Calif.
Wills, Donald T.
TRW Systems, Inc., Redondo Beach, Calif.
Wilson, C. P.
NASA Headquarters, Washington, D.C.
Windle, Wallace W.
Ling-Temco-Vought Inc., Michigan Div.,
Warren, Mich.
Winter, Thomas C., Jr.
Naval Research Laboratory,
Washington, D.C.
Winters, Glen E.
TRW Systems, Inc., Redondo Beach, Calif.
Witters, Robert F.
Hughes Aircraft Company,
Culver City, Calif.
Wolfe, Allen E.
Jet Propulsion Laboratory, Pasadena, Calif.
Woodyard, Robert H.
General Electric Company,
Philadelphia, Pa.

Yetka, Norman D.
NASA Ames Research Center,
Moffett Field, Calif.

Zinn, Edward R.
Hughes Aircraft Company,
El Segundo, Calif.

Contents

Contents (contd)

Welcoming Remarks

Dr. William H. Pickering
Director, Jet Propulsion Laboratory
Pasadena, California

I am very pleased to welcome you to the Jet Propulsion Laboratory for the 3-day workshop on spacecraft electromagnetic interference. I think it very appropriate that time be spent now in anticipating and preparing for the serious electromagnetic interference problems that will arise as spacecraft become more complex.

Just last week, we were observing the tenth anniversary of the first *Explorer* satellite which was, of course, a very small and simple device by today's standards. However, even then, there were problems in electromagnetic interference between the spacecraft and the launching rocket. Of course, with the present far more sophisticated missions, electromagnetic interference becomes a problem of considerable magnitude.

Therefore, I feel that there is real value in your workshop. Out of such meetings will evolve important contributions to future missions. We, at JPL, are pleased to play host to this conference which, I hope, will be both profitable and enjoyable.

PRECEDING PAGE BLANK NOT FILMED.

Opening Remarks

Glenn A. Reiff
Mariner 67 Program Manager
National Aeronautics and Space Administration
Washington, D.C.

During the development of each of the *Mariner* spacecraft, we found that, amongst quite a number of problems, there usually stood out one engineering or technical area that required an undue amount of effort and had connected with it an undue amount of grief. In the case of *Mariner II*, this area was thermal control. At the time *Mariner II* was being developed, thermal vacuum facilities were not adequate to properly simulate the near-Venus environment. The art of thermal design was still pretty much in its infancy. We think that the ultimate demise of *Mariner II* was caused by thermal problems. The spacecraft was getting extremely hot as it approached Venus and a number of failures in telemetry points, etc., were occurring. Ultimately, the spacecraft stopped transmitting.

During the development of *Mariner IV*, the problem areas were different. Two of these problem areas stood out: one had to do with the stability in the magnitude of the ambient magnetic field of the spacecraft, and the other with high-voltage breakdown and corona and arcing problems. This latter group of difficulties became extremely serious and, at one time or another, practically every spacecraft subsystem had some form of high-voltage problem. Fortunately, almost all of these problems were solved prior to launch and, as a number of you know, the effects did not seriously degrade the *Mariner IV* mission. However, during the nine months during which *Mariner IV* was cruising on its way to Mars, we began asking ourselves what caused so many arcing problems. The effects of voltage at low air pressures has been known for years. We asked ourselves whether other aerospace projects had as much trouble as we had encountered. Why were these types of difficulties not communicated more effectively? Certainly one mechanism of communicating is through the technical societies. There is a great amount of effort devoted to this type of communication.

With these questions we decided to experiment with a series of gatherings that we call workshops. Three of these workshops were held – one on thermal control, one on magnetics, and another one on high voltage. The idea basically was that these workshops should be informal and concern real hardware problems recently experienced by personnel closely connected with the spacecraft hardware. In setting up some of these initial meetings, a few people expressed a reluctance to talk about fairly recent experiences because they felt that, perhaps, the facts had not really been sifted enough and that the problem might not be well enough understood to really draw concrete conclusions. As a result, it was decided to limit the distribution of the proceedings, although they generally are made available to those who attend and those who have a need-to-know in the performance of other jobs. We also encouraged fairly lengthy and lively discussion periods.

Today, I find it rather difficult to assess the value of these past workshops; however, I do know that *Mariner V* had less magnetic background than *Mariner IV*. I know that there were fewer high-voltage problems encountered in the development of *Mariner V*, and I also know that *Mariner V* is expected to have survived a close perihelion passage of approximately 0.58 AU. Maybe the workshops did help a little. At least they focused attention on certain problem areas.

These remarks do not mean that we did not have problems with the development of *Mariner V*. Here again, a particular problematic engineering area stood out. This time it was electromagnetic interference. More will be heard about the detailed experiences on *Mariner V* later in this workshop. However, I think that the nature of the problem is indicated by the fact that the 112th harmonic of an oscillator in one subsystem caused approximately a 16-dB degradation in another piece of equipment. There were several examples of this kind of interference. We think that practically all of the serious cases of interference in *Mariner V* were discovered prior to launch and I cannot recall any of them which seriously impacted the flight.

This is the genesis of these workshops. In scanning the agenda, it appears that a few other projects have had experience of a nature similar to that encountered with *Mariner V*. I hope that this exchange will be beneficial to all.

N69-25427

Electromagnetic Interference from a System Manager's Viewpoint

Allen E. Wolfe
Jet Propulsion Laboratory
Pasadena, California

On behalf of the successful, but also nearly extinct *Mariner* Venus 67 Project, I should also like to welcome you to this workshop. Some of you are painfully aware that we suffered from electromagnetic interference (EMI) problems during the test phase of *Mariner* Venus 67. Although the problems were resolved satisfactorily, the experience was recent enough to act as a stimulus and an incentive for fostering this session. I am delighted with the turnout, and I hope that most of you have come to actively participate.

I should like to talk for a moment about the impact of EMI as seen from a management viewpoint and to highlight ways in which you can provide increased support to future projects. I am also certain that there are ways for management to make this job easier for you, and I think it reasonable and desirable if these could be made known by the end of these sessions.

EMI may strike a project during any phase of development and with an impact that becomes more serious the later the phase. The most serious impacts, of course, are caused by those problems that result in loss of life, no matter what phase the project is in. However, the phase of greatest concern is the flight phase, wherein the entire mission may be lost or seriously compromised. Examples of these problems might be an accidental turn-on of a critical subsystem during the launch phase such that it is damaged as it passes through the critical pressure region, or an interference that prevents critical commands from being received by the spacecraft, or high background noise masking the expected signal, or sensor interference. The cost of mission failure is high – so high in fact that it is best not to leave any stone unturned that could prevent failure. Mission degradation is more of an intangible, but it too is a serious situation that generally can be salvaged by increased resources or cleverness.

Incompatibility during the test phase usually results in hardware modifications, schedule delay, or even modification of the mission objectives if the problem cannot be resolved. The impact of these problems translates into increased cost and more risk because of last-minute hardware modifications, decreased test time in final configuration, and less than optimum conditions under which work is carried out. Admittedly, some of these results are of an intangible nature whose significance to the overall reliability picture is difficult to assess. But the chance of occurrence should still be minimized.

The obvious solution to these risks is to legislate against them during the inception of the project. To really cover the field, the system should be required not to generate *any* electromagnetic radiation (EMR), and, in case the EMR is external or the first requirement does not work, we should say "thou shall not be susceptible to *any* EMR." This leads to several difficulties, including the fact that projects do not have unlimited funding or other resources, launch schedules are supposed to be met, the reliability of the end product is undoubtedly degraded, and the performance of the system will be less. We probably could not tell whether the specifications had been met anyway.

The problem really becomes that of trying to define more judiciously what is meant by *any*, while still trying to strike a balance between resources and risk. Therefore, we should like to define *any* to ensure a compatibility margin during flight and to minimize the probability of having to take corrective action during the test phase.

We can look at the problem of determining this balance by noting, in simple form, what forces are at work and then figuring out how to help or control these forces.

The subsystem designer wants to ensure that his subsystem will work in spite of the EMR contributed by subsystems in the next bay. He is largely interested in ensuring as high an electromagnetic compatibility (EMC) level as possible.

The system designer is more concerned about the interference between subsystems. Therefore, his prime goal is to reduce the EMR to a minimum. Last, the project view is one of making certain that there is at least a positive margin between the compatibility level and the radiation level. However, large margins are great if they do not cost anything. This is shown conceptually in Fig. 1. The notches and peaks in radiation level and compatibility level would be the result of specific requirements of the subsystems, such as receivers and transmitters. The system and subsystem efforts work on the lower and upper bounds of the compatibility area, expanding the compatibility margin. Again, the project view is to ensure a compatibility margin over the entire spectrum.

Although this is a simple figure, it points out one of the critical elements of the EMC program, i.e., the early definition of just what this picture really is and, hence, the definition of those critical areas that will require the most attention. The overall program for EMC should include:

(1) Availability of good design practices, the use of which would simultaneously extend compatibility level and minimize radiation without compromising reliability or performance. This would include circuit design, component usage, layout, shielding, and interconnection.

(2) Early recognition of the types of EMR involved, and potential problem areas as indicated by the notches and peaks.

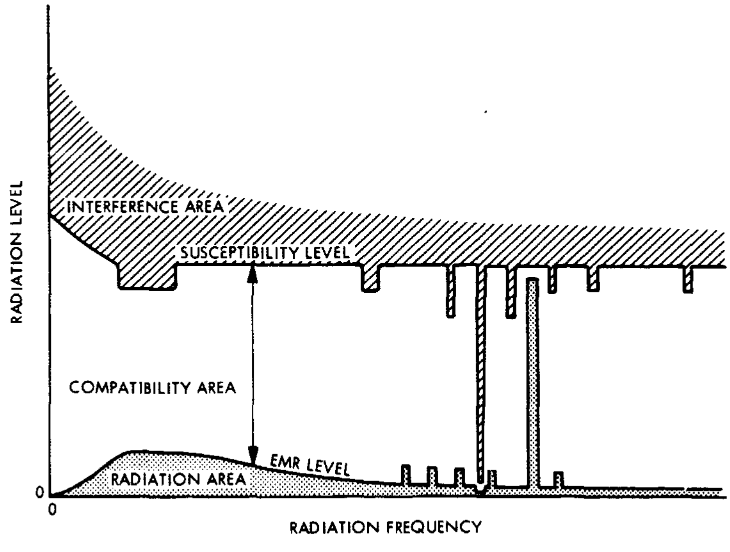

Fig. 1. Relationship between EMR, EMC, and EMI

(3) Definition of an EMC specification.

(4) Definition of an EMC test program.

(5) Simple method of measuring EMC.

(6) Special capability for trouble-shooting.

(7) Reliable corrective measures.

The EMI problem can best be handled by treating it systematically. This requires the integration of the above elements into an effective system, the continual development of effective tools, and recognition on the part of Project that the effort requires early and continual support. I hope that this workshop can help provide a continuing emphasis towards these goals.

Discussion

William Lash: I would like to know whether JPL has initiated a general specification for use by the Laboratory, and, if it has, is it available?

D. T. Frankos: We have a specification that is not used very much for the simple reason that it is patterned after the Military Specifications. To blanketly apply a specification of this nature, in accordance with some of the things Mr. Wolfe brought up, is pretty difficult because of the time, schedule, and money problems. You might say that we do have one in our reserve account. We try to approach the programs not on a blanket specification basis, but on one that is more tailored to the particular program, its missions, and within the framework of time, schedule, and money.

Larry R. Pangburn: I think that Mr. Wolfe hit on some very important aspects of our programs, which I will call Systems Engineering. In the early conceptual phases of our programs we need aids such as the chart discussed by Mr. Wolfe. Now, theoretically, we can tailor all the requirements for a given system. However, we encounter two major problems while trying to do this. One of the problems is that we really do not have enough time to do that much engineering in that early phase; the second problem is that, if we change the missions, or mission requirements, we also have to change all the equipment requirements. Therefore, I think that we must have a mixture of baseline or standard specifications plus supplements for the given system.

Robert G. Peltzer: You must get your inputs in extremely early concerning the selection of experiments, what these experiments will measure, what will be the requirements for their sensitivity, etc. The spacecraft should be fairly well defined by the time the experiments are starting to be designed. I think that these items will have been specified, so you can pretty well specify the frequencies, pulse widths, etc. Each experimenter should specify the frequencies that he is going to generate in his package. Now, this is essentially obtaining inputs to generate the chart that Mr. Wolfe was talking about. It would not really be unmanageable if personnel would put the inputs into a central group that would recognize their relationship and do something with them, such as alert experimenters or systems designers for the spacecraft of potential problem areas.

A. E. Wolfe: Commenting along that line, I think that, if we were all starting from a dead standstill, we would be in real trouble. I think that is probably what has happened as the years went by. In the old days we were at this standstill and everything was being developed new. As we go along, hopefully, we are developing subsystems in the spacecraft that we gradually come to know; maybe we did not know when we started what the characteristics were; however, we certainly should know them after we have flown the subsystems a couple of times. Therefore, there is a gradual increase in this knowledge and an awareness of areas and specific frequencies to avoid if possible. In the experiment area, it is more difficult in that these frequencies usually are employed for the first time, and it is during this first time that you have the most trouble. If these subsystems fly a second time, then you are in a little better shape. It is certainly true that, by tailoring too carefully to a specific mission, should a mission change occur or should you be forced to change the hardware on that first mission, you then are vulnerable to problems.

PRECEDING PAGE BLANK NOT FILMED.

N69-25428

Applicability of EMI Specifications

Guy L. Ottinger
Lockheed Missiles and Space Company
Sunnyvale, California

I. Introduction

One of the primary tools affecting the basic philosophy and policies for controlling electromagnetic interference (EMI) is the official specification for the particular space program. This specification is usually called out in the contract, the work statement, the system performance document, or all three. It has been found that many of the requirements may or may not be applicable, depending upon the specific program internal and external environments. This is, of course, to be expected for a specification having general applicability. However, there are certain areas, applicable to all programs, that are covered improperly, or not at all. It is the purpose of this paper to discuss some of these problem areas and suggest possible solutions for your consideration.

I will limit this discussion to a few typical documents which are widely used in space applications, such as MIL-STD-826A (Ref. 1), NASA MSC-ASPO-EMI-10A (Ref. 2), LMSC-447969B (Ref. 3), and Space Systems EMC requirements (Ref. 4). Notice will also be taken of the new DOD Standard, MIL-STD-461 (Ref. 5), which is mandatory for use by all DOD departments and agencies. There are, of course, a number of other specifications not mentioned here; however, the above documents are typical and serve to illustrate the points.

The problem of adequate systems EMI safety margins at critical points has become a matter of concern; note will be made of MIL-E-6051C (Ref. 6), and MIL-E-6051D (Ref. 7), as well as the systems portion of EMI-10A and Space Systems Specification. Important consideration will be given to transient requirements.

In a paper of this nature it is feasible to discuss only a few of the most common application problems. The historical analysis and origin of the limits for the various specifications is not discussed. Further information on these matters can be obtained in Ref. 8.

II. Correlation Between Conducted, Generated, and Susceptibility Limits

The degree of correlation between generated and susceptibility limits is perhaps the most important relationship that any specification can cover. This paper will show that such limits vary so widely as to cast doubt on their general applicability. The ultimate requirement is for the overall space system to be compatible within itself and to its external environment. To ensure that compatibility exists under normal production tolerances and environmental ranges, it is necessary that the susceptibility thresholds, at the most critical points in each subsystem, be demonstrated to be at least 6 dB greater than the sum of all the existing EMI at such points. The value of 6 dB has normally been considered as the required margin in MIL-E-6051C (Ref. 5), MIL-E-6051D (Ref. 6), and the system requirements portion of EMI-10A and Space Systems Specification.

III. Transient Requirements

One of the major problems in EMI control in space systems is the proper handling of transients. Susceptibility testing is adequately covered on the power lines in all of the specifications discussed herein. Transient levels are normally ±100 V, or twice the line voltage, whichever is least. Specifications EMI-10A and LMSC-447969B require ±50 V. Test requirements specify pulse repetition rates from 2 to 800 pulses/s, and are to be applied up to 30 min in one case. Susceptibility transient testing at 800 pulses/s for 30 min is open to serious question. All specifications, except Space Systems, require that all transient interference levels meet the steady-state levels.

IV. Single Event Transients

A new requirement and method are needed to properly control single-event-generated transients and provide meaningful information for design engineers. The usefulness of the standard amplitude-versus-frequency data (i.e., decibels above 1μA per megahertz versus spectral distribution) is highly questionable to the electrical–electronic equipment designer. However, transient amplitude in the time domain is immediately understood and applicable.

Lockheed Missiles and Space Co. has specified and is using the time domain single-event transient criteria in several space programs. The details in connection with the development of these criteria follow. A single-event transient is defined as no more than one operation for any 10-s interval, except that one turn-on and one turn-off is allowed for each 10-s interval, provided the one transient has returned to line steady-state value before the other is to be initiated. The amplitude of the transient is limited to 12.5 V above, or below, normal operating voltage at any external power interface lead. Control and measurement of the pulse duration is also of equal importance. To define this, it should be recalled that there are many pulse shapes, from a single spike to the oscillatory type, with the envelope both above and below the axis. Inasmuch as the area under the curve is a measure of the energy content, the envelope illustrated in Fig. 1 is used. Total transient pulse width is the sum of the separate pulse widths, defined at the 5-V level, of each positive and negative voltage excursion exceeding 5 V. This width shall not exceed 250 μs, and the voltage shall return to the line steady-state value within 1 ms.

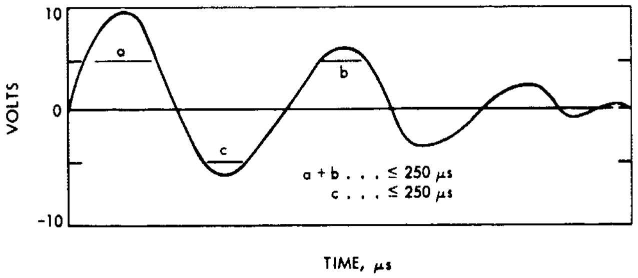

Fig. 1. Pulse envelope definition

This definition considers the energy level at, and above, the 5-V level to be significant. Single event transients at, or below, the 5-V level on power supply lines are not significant, even though such interference will not meet standard EMI specification limits in the frequency domain. Accordingly, transients meeting the criteria previously defined should be exempt from such requirements for both conducted and radiated noise.

V. Susceptibility Correlation

Present susceptibility testing, in accordance with MIL-STD-461/826A and Space Systems, requires at least ±60-V spikes for a 30-V supply voltage; therefore, more than a four-times, or 12-dB, amplitude margin exists. This margin is deemed adequate. From the energy viewpoint, on a worst-case basis, a four-times energy content margin can be met by injecting a single square wave of 67-μs duration for each single event. Alternately, the same four-times energy margin can be obtained by injecting the standard 10-μs spike (MIL-STD-826A, Fig. 1001-13) for 10 s at the rate of approximately 10 pulses/s. Specification of a minimum transient repetition rate for the transient susceptibility test used in all five specifications discussed eliminates the need for a special test and allows the use of standard approved test methods and test equipment. This is the recommended procedure.

The specified amplitude and duration limits for single event transients are such that semiconductor devices operating from the main power bus should not be affected. Most semiconductor devices have thermal time constants of several milliseconds. Furthermore, most failures of semiconductors occur because of excessive energy dissipation during a breakdown mode. The single event transient amplitude is not sufficient to cause breakdown (assuming proper design and derating) and, if it should, the total duration of the allowed transient (1 ms) should not be long enough to cause a problem.

VI. Test Method

The last item is to specify a standard test circuit for transient and spike voltage measurement. The circuit of Fig. 2 was selected as being representative of conditions existing in a spacecraft at subsystem or equipment interfaces. It is preferable to use actual cable wire sized in accordance with the load current. If a filtered or soft switch is used, the relay and contacts shown in the circuit should be replaced to simulate actual conditions.

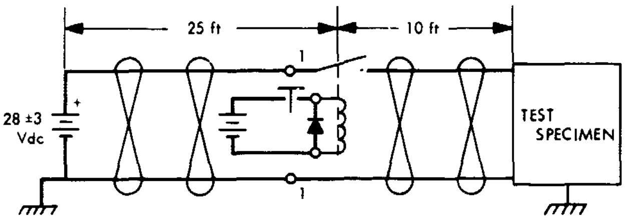

MEASURE TRANSIENT WITH OSCILLOSCOPE (A BANDWIDTH GREATER THAN 20 MHz) AT POINTS 1, 1

CABLE FROM BATTERY TO LOAD IS 20-GAGE TWISTED PAIR OR ACTUAL WIRE SIZED PROPORTIONAL TO THE SPECIMEN LOAD

RELAY SHALL BE 2-A OR 10-A RATING, AS REQUIRED BY THE LOAD. THE SWITCHING DEVICE MAY BE WITHIN THE TEST SPECIMEN RATHER THAN AS SHOWN

⏚ - BENCH OR FACILITY GROUND

POWER SOURCE IS STORAGE BATTERIES OR AGE SUPPLY

Fig. 2. Standard test circuit for transients and spike voltage measurement

VII. Conducted Interference Testing Using Line Stabilization Network

The most straightforward comparison of equipment generated and susceptibility limits is readily apparent in Fig. 3. The lower half of Fig. 3 shows the allowable voltage levels using a line stabilization network (LISN) for narrow band conducted interference. The values for MIL-STD-826A and Space Systems are equivalent voltage limits based upon the product of the allowable conducted line current and the impedance values of the LISN over the frequency range of concern. It should be noted that the oldest specifications, EMI-10A and LMSC-447969B (both based on MIL-I-26600), have the most restrictive limits above 500 kHz, while MIL-STD-461 is the most tolerant. The susceptibility levels are the two upper curves. These relationships may be summed up as follows:

Specification	Susceptibility-generated limit differences, dB
MIL-STD-461	58 to 60
MIL-STD-826A/Space Systems	66 to 78
EMI-10A/LMSC-447969B	37 to 66

Such differences or safety margins can be considered excessively conservative. In attempting to arrive at the proper relationship, it is incorrect to use the 6-dB margin because any space system will have many pieces of equipment contributing their own EMI characteristics to the system. The various individual interference signals will rarely, if ever, be in phase at any particular frequency; thus, a direct addition will be exceedingly remote. It has been suggested that the square root of the sum of the squares be used.

Let us assume ten sources with signal levels increasing in 50-μV steps starting at 10 μV. The composite level would be approximately 900 μV with the strongest individual signals at, or above, the allowable generated limits. If this value were to be plotted in Fig. 3, it would be evident that even the lowest of the susceptibility test levels, the EMI-10A, provides a safety margin greater than 40 dB, while the margin goes up to 60 dB for MIL-STD-826A. Perhaps a 30-dB margin should be adequate for normal electrical/electronic equipment. LMSC experience indicates that the problem is generally with susceptible equipment; thus the limits for generated interference should be raised by the amount greater than the 30-dB margin. Applying such a change to MIL-STD-461 generated limits would raise the limit by 28 to 30 dB. This would appreciably reduce filter requirements, improve reliability and functional equipment performance, and reduce weight.

Broadband-conducted interference limits are shown in Fig. 4. There is no susceptibility test method specified

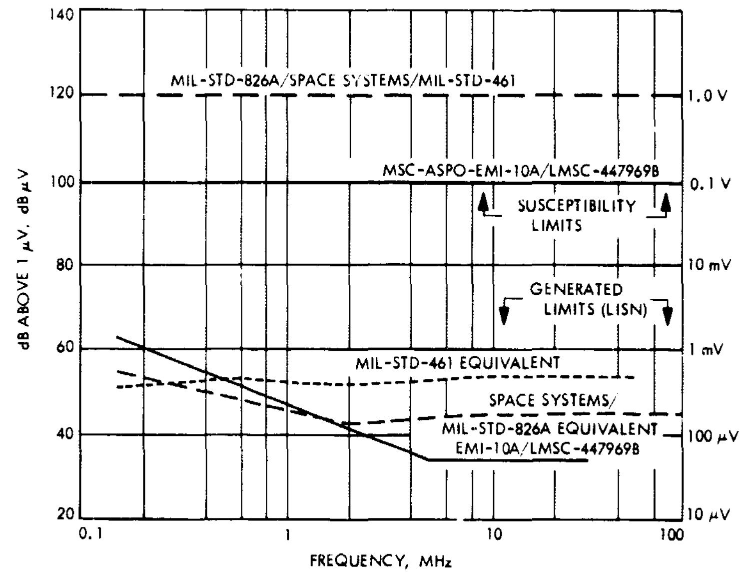

Fig. 3. Narrowband conducted, generated, and susceptibility limits

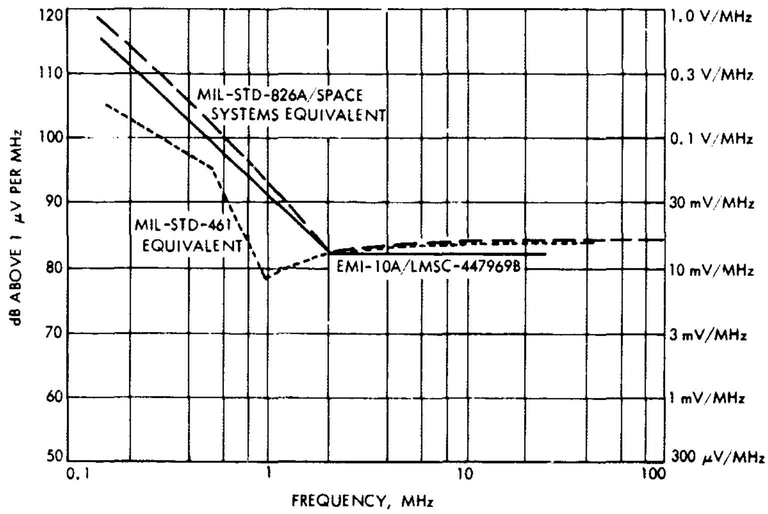

Fig. 4. Broadband conducted interference using line stabilization network

that attempts to simulate broadband signals. Presumably the CW method has been considered adequate. LMSC has employed the standard 10-μs spike generator at a 10-pulse/s repetition rate to inject a broadband signal on power lines at levels 10 to 20 dB above specification interference limits for frequencies up to 10 MHz. This method has been successfully used to perform both transient and broadband susceptibility testing at the same time, thus effecting a saving in test time. The use of nanosecond pulses will produce broadband signals with spectral energy up to, and beyond, 1 GHz.

VIII. Conducted Interference Testing Using Current Probes

The use of the current probe is the most popular method of specifying conducted interference levels. MIL-STD-826A, Space Systems, and MIL-STD-461 require use of the current probe. The other specifications permit, or require, use of the LISN as well as the current probe. Figures 5, 6, and 7 show the allowable interference currents from 30 Hz to 100 MHz. Susceptibility testing would frequently be more realistic, correlative,

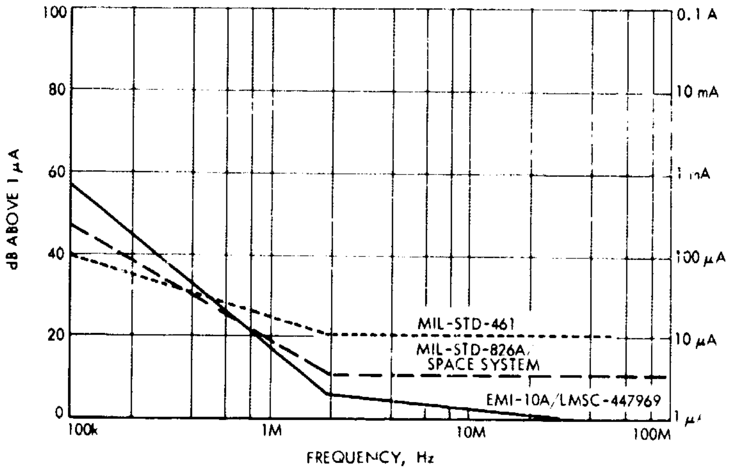

Fig. 5. Narrowband conducted interference using current probe

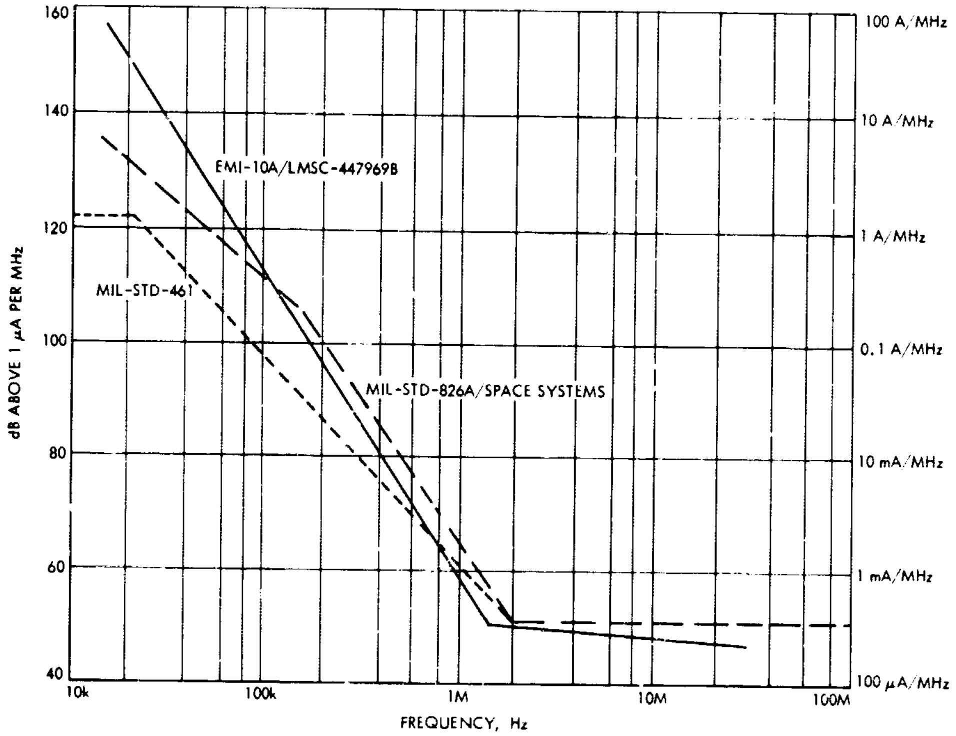

Fig. 6. Broadband conducted interference limits using current probe

and convenient if methods were permitted or specified using current injection techniques. Current injection probes are now available that have the capability of handling the major part of equipment and subsystem testing. This will also allow ready testing on signal and control lines where LISN do not apply.

IX. Conducted Low-Frequency Testing

Low-frequency conducted susceptibility test criteria are expressed in terms of a voltage across the test specimen. The present limits differ in some important aspects as presented in Table 1. Experience indicates that the

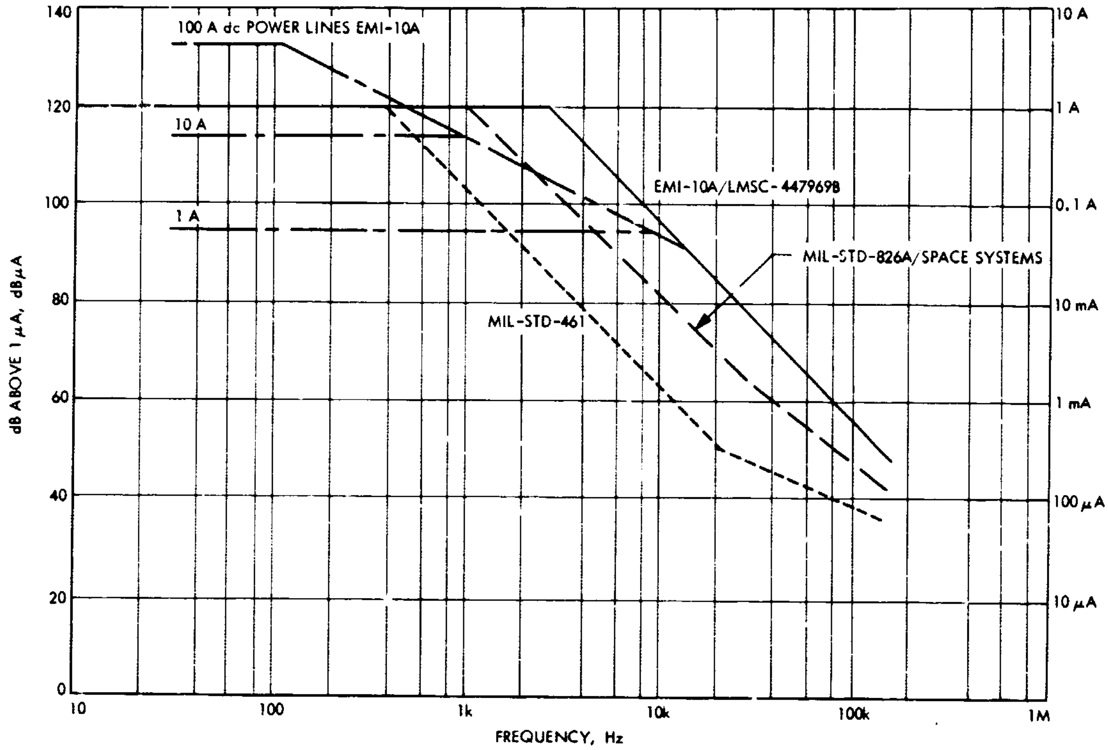

Fig. 7. Narrowband conducted interference limits using current probe

Table 1. Audio susceptibility test levels

Specification	Limits (RMS), 30 Hz to 15 kHz	Limits (RMS), 15 kHz to 150 kHz
MIL-STD-826A	10% line or 3 V use least value	Decrease to 1 V
MIL-STD-461	10% line or 3 V use least value	Decrease to 1%
Space Systems	5% of line voltage	Decrease to 1 V
NASA MSC-ASPO-EMI-10A	3 V	None
LMSC-447969B	1.2 V	None

test limit of 10% of the line voltage or 3 V is unrealistically high and imposes an unnecessary increase in weight, power consumption, complexity, and design effort for many items of equipment, particularly converters and inverters. LMSC has made a number of measurements of steady AF noise on power supply buses for spacecraft during the past few years and has not measured ripple voltages greater than 350 mV zero to peak, or approximately 250 mV equivalent rms. Therefore, a limit of 5% of the line voltage will provide a safety margin greater than 12 dB. Considering a noise current of 1 A allowed per Fig. 7 and a combined power source and cable impedance of ¼ Ω, the resulting ripple would be 0.25 V. Again, the susceptibility-generated relationship is greater than 12 dB.

X. Radiated Testing

There is even less correlation between radiated interference and susceptibility limits than has been previously noted in conjunction with conducted limits. Figures 8 and 9 show that there is little, if any, uniformity between the various specifications. The conversion of units from antenna-induced voltage to field intensity units follows the system used in Ref. 8 for EMI-10A and LMSC-447969B limits. All of the newer documents specify limits in units of field intensity.

It is informative to compare the susceptibility field intensity levels of Fig. 10 with the narrow band radiated limits of Fig. 8. This can be summarized as shown in Table 2. Again, it is noted (Table 2) that margins of 40 to 120 dB appear to be excessive. It does not appear

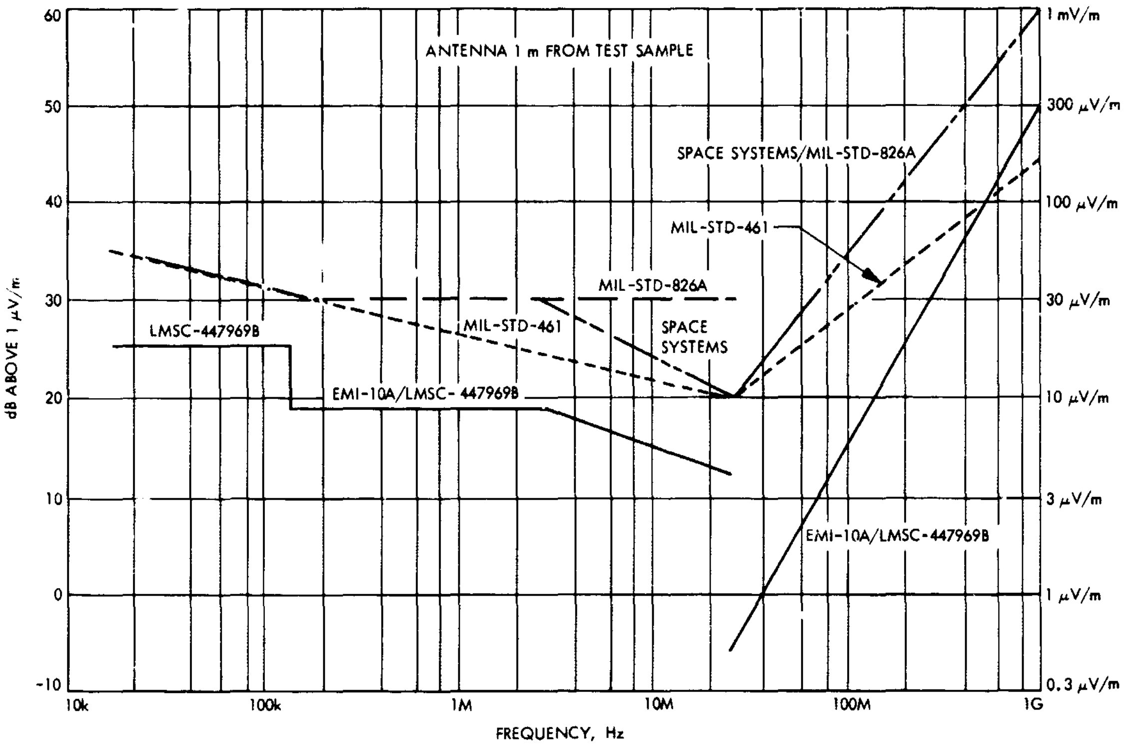

Fig. 8. Narrowband radiation limits

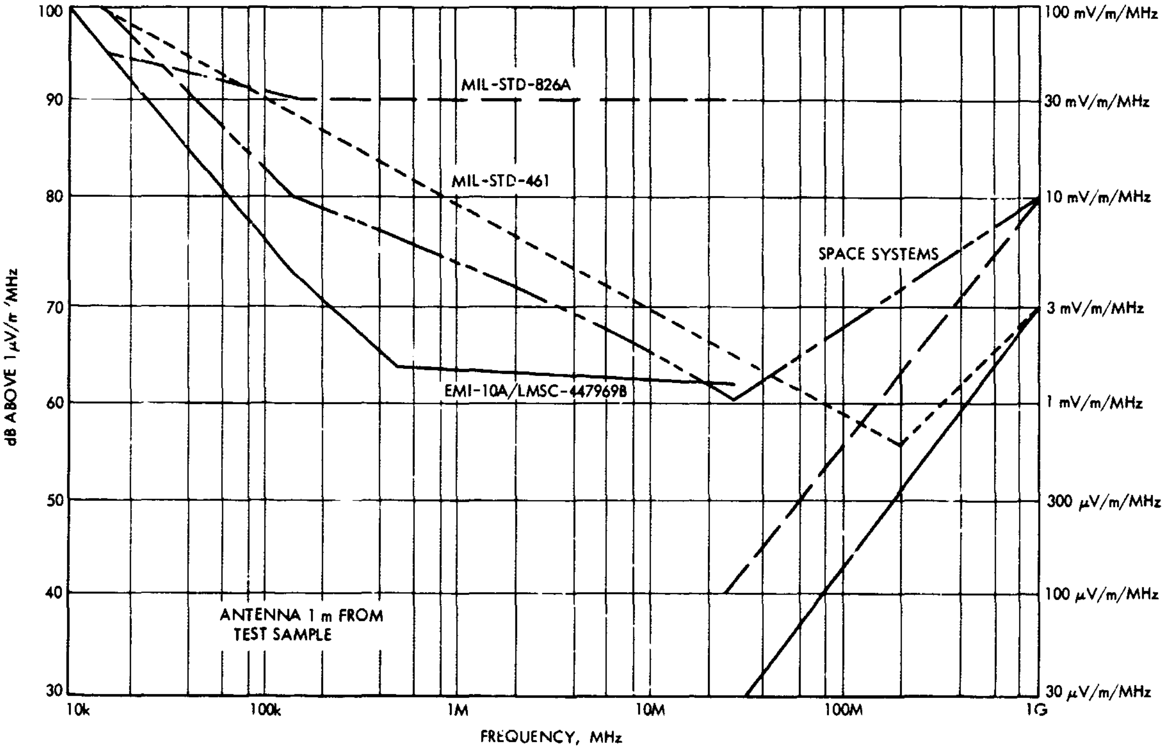

Fig. 9. Broadband radiation limits

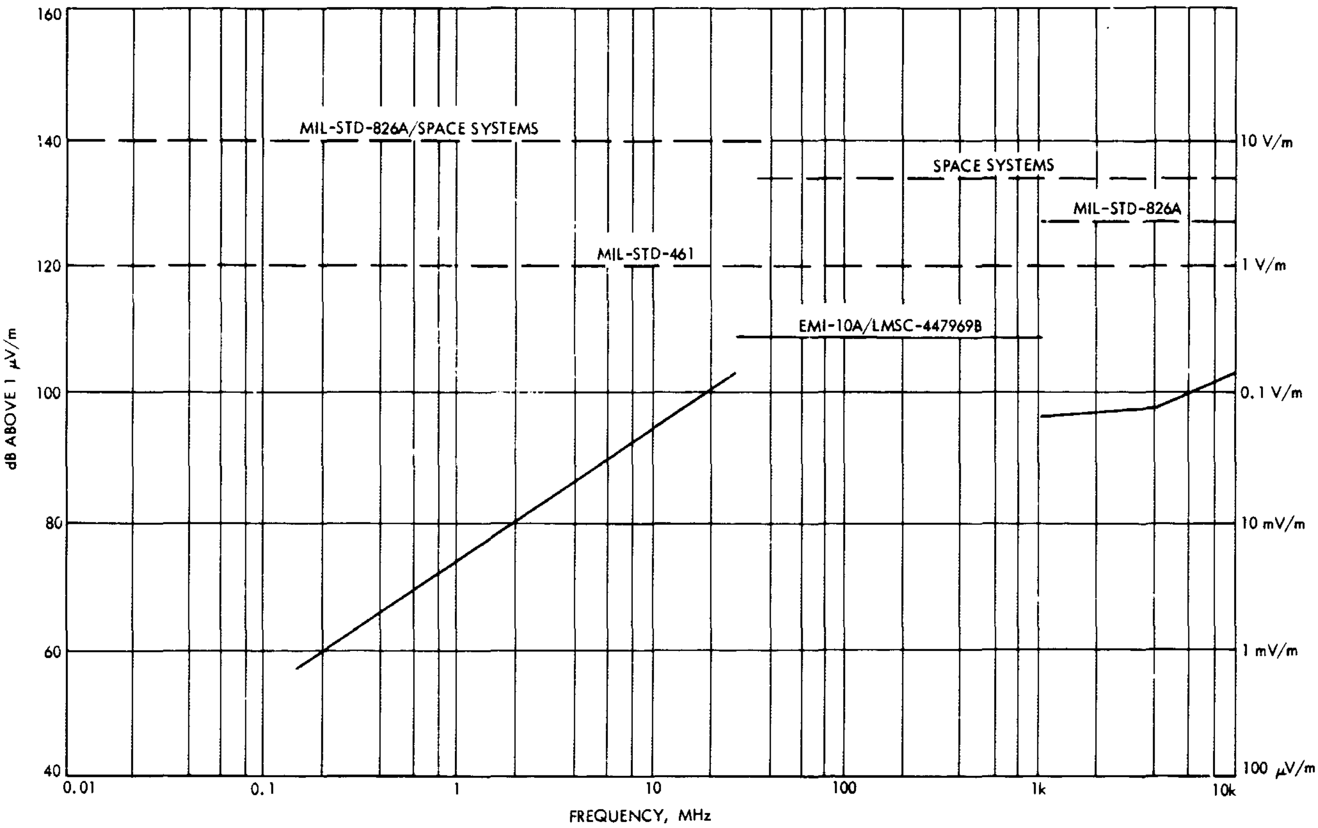

Fig. 10. Radiated susceptibility limits, 14 kHz to 20 GHz

Table 2. Radiated susceptibility vs interference margins

Specification	Difference ranges, dB
MIL-STD-826A	66 to 120
Space Systems	74 to 120
MIL-STD-461	75 to 100
NASA MSC-ASPO-EMI-10A/ LMSC-447969B	40 to 113
Average:	64 to 113

that much relief can be expected in the future because MIL-STD-461, issued July 31, 1967, requires a margin of 75 to 100 dB.

XI. Correlation Between Systems Level and Equipment Margins

The major objective of EMI control is to provide system electromagnetic compatibility so that flight mission objectives can be attained. Historically, equipment and subsystem limits (Ref. 7) have been established, based on the capability and sensitivity of EMI test equipment, sensitivity of an unfiltered aircraft communications receiver with an unshielded lead-in, arbitrary engineering opinion, and special-purpose requirements. At present, there is no valid mathematical relationship between equipment margins and critical systems margins as specified in MIL-E-6051C/D. It is generally recognized that a new program has a better chance of demonstrating safety margins at systems critical points if the equipment meets some EMI control levels. Again, there is no agreement as to what these levels would be until after the system is tested.

Specifications MIL-E-6051C, Space Systems, and EMI-10A specify a 6-dB safety margin between the critical circuit susceptibility thresholds and the existing noise in the circuit. There has been a change in systems test philosophy as the latest systems compatibility requirement specification, MIL-E-6051D, does not require demonstration of safety margins, but merely requires that consideration be given to establishing safety margins for subsystem/equipment assigned to primary criticality categories. Even then, such safety margins may only be used when approved by the procuring activity and only when catastrophic results of an EMC problem justify their use. Specification MIL-E-6051D emphasizes that existing test points shall be used and that special equipment or circuit breakout use shall be minimized. The level of safety margins, unless otherwise specified, shall not be less than 6 dB (20 dB for explosives). In each particular system, it is necessary to evaluate instrumentation and other errors to arrive at the optimum levels. Generally there does not seem to be enough data to support more than a 6-dB requirement, except in the case of pyrotechnic circuits where range safety requirements dictate.

XII. Conclusions

There is a real need for control of single-event transients with measurements in the time domain. A set of requirements is established and justified. The difference in levels between susceptibility limits and allowable interference generation limits is too great and imposes an unnecessarily severe burden on a space program. It appears that a thorough study and test program is needed to establish the relationship between equipment EMI requirements and system performance.

Discussion

Guy L. Ottinger: Specifications MIL-STD-826A and MIL-STD-461 state that, in the interference control plan, you should call out your particular transient requirements. It has been my experience, having written and submitted a number of control plans, that there is a long period before they are approved. After the plan has been forwarded, you may be led to think that this takes care of the problems; however, it is usually 4 or 5 months before you get the first interference control plan to the customer. Then, as much as a year may pass before it is finally approved. In the meantime, you must put out specifications for the black boxes and all of the experiments. The interface documents must all be prescribed. Therefore, if you do not have an idea of what the requirements will be before the control plan is approved, you will still have a lot of problems to solve. The solution of these problems will prove costly and schedule delays will result.

In Figs. 3 and 10, besides showing susceptibility limits, the output has been converted to the field intensity in volts per meter. Use of the word field intensity implies that it is, in fact, a free-space radiation reading. It is not. Most of the susceptibility tests are conducted in screened rooms and, in a screened room, the best that can be said is that there is an apparent field intensity. As long as everybody uses the same system and the same methods, and identical conditions, it is probably the best that can be done. It is perhaps better than the old system.

Hector M. Smith: At the beginning of the paper, Mr. Ottinger made the comment that specifications should be written in a form that the equipment designer can understand. I would also like to look at the other side of the coin. I would like to see the designer include in his manuals information that the EMC man needs, such as random noise bandwidth, impulse bandwith for receivers, susceptibility to different kinds of signals, etc. In looking at susceptibility problems, I had to do a great deal of guessing and digging to obtain the information I needed to determine whether the equipment was susceptible or not.

Albert C. Whittlesey: I would like to ask a question regarding a particular area of your talk; it does not necessarily have to be answered by you. The question is on the transient. You have voltage levels and then you immediately jump to energy levels. With all the various impedances, especially on power lines and various other lines, I would like to know how you can have one uniform energy level, or what you think might be a most appropriate type of transient. I would like a discussion on this, because I do not think there is a real solid answer.

Guy L. Ottinger: This is one of the reasons why we have a 2-to-1 or 4-to-1 safety margin, so as to have a bit of reserve left over. The way we compute energies by integrating the area or squaring the voltage over the impedance of the line times the duration gives so many millijoules. I have forgotten exactly how many joules our particular device comes up with. It is quite true that you have to assume a constant impedance if you are going to directly relate voltage and energy determinations, which is not true. The semiconductor circuit, of course, has to be designed to withstand the ±50-V or 100-V spikes, or whatever they are. So you get additional protection.

Robert O. Lewis, Jr.: In our design of the *Lunar Orbiter* we stabilized the power source impedance so that it had constant impedance with frequency. Then, we devised our specification so that there would be a constant average power, no matter the rate of the pulse repetition. We could then develop a series of curves which would limit the average power on the power bus to a particular level versus frequency.

Robert W. Ellison: It does not appear to us that the digital equipment that is being used in many of the programs today is adequately covered by spikes which run up to 250 μs in width. We have found that any number of static inverters, which are used in practically all of the packages which come off of dc power buses, are generating spikes which are 1-μs total duration, maybe 100 ns at the half power points in other cases, and with repetition rates from about 400 Hz to 100 kHz.

Discussion (contd)

We also find that these same equipment are susceptible to a mode which, as far as interference is concerned, appears as though both the + and − leads are connected to one terminal and the other side of the circuit is the case, i.e., a common mode between both power lines and case. If you do not do any testing, which covers that common mode, it may be that you will not know that this is the most susceptible mode of many pieces of digital equipment. Some of these digital equipment are instrumentation systems, some are guidance computers. We are finding that the levels on some of this equipment are down on the order of 500 to 600 ergs, which is an extremely small amount of energy. This was discovered by one of our associate contractors during some tests. Applying 140 mV for only 50 ns in a common mode was sufficient to make the equipment compute completely gross errors or even jump programs in its computers.

Thirdly, we are finding that we are getting into systems which have many different black boxes. There are all kinds of power leads. The ones we are always associated with are the dc power or the ac power leads; however, we find now that we are getting into systems where one black box has a 250-kHz clock or a 500-kHz clock, or even sometimes megahertz clocks, which distribute essentially clock power to other boxes. The slightest effect on the rise time, or the time of occurrence of that rise, can cause serious degradation. Therefore, I would think that if we are going to do something about transient waveform specifications, they ought to be pushed so that they also cover these very short spikes.

Guy L. Ottinger: You have raised some very good points. A lot of these noises you are speaking of are not single event transients; they are repetitive rate types of devices for which we are bound to meet the present EMI specification limits. Therefore, you should have a little better control over them. If you have a circuit that responds to nanoseconds, you have big isolation problems that do not really depend on what you do in a power line. You could never make the power lines clean enough so that your system will not be affected. With a problem of this magnitude, equipment will require special precautions, double or triple shielding, use of differential amplifiers, 10, 20, or 100 MΩ isolation, reduced capacity effects, etc. This, certainly, is a new order of magnitude which is beyond what I was talking about here; I am a little more down to the practical power supply – the power problem. I recognize that important problem, but believe it falls into the area of signals. Whenever you are talking about signals, you have to go in and find out what your problems are. As Mr. Smith mentioned, we should train equipment designers to give us some useful specification data so that we know what kind of signal the equipment responds to. A great deal can be done to design some of this equipment so that it is not responsive to the nanosecond pulses. Where you have a circuit that depends upon such pulses, you have a separate system that requires attention.

George H. Clavell: Looking at that single event transient from a purely theoretical standpoint and its harmonic contents, that type of waveshape lends itself quite readily to analysis with Laplace transform methods. Theoretically, with these waveshapes, most of the components are contained in the very low frequency region, at least the higher-amplitude components. If you want to correlate that kind of transient or a single event transient, using some of the other methods used in past analyses, you will find that the transients do contain the low-frequency components. Then, the interferences that might be caused by these components might be overlooked if you ignore doing a broadband frequency, or broadband component search. Therefore, I question the adequacy of ignoring all the various methods of analysis and merely identifying or putting a limit on the transient itself.

Guy L. Ottinger: We have been making those measurements for years. I have many of these measurements and I have presented them many times to EMI boards. We have tried to explain to the equipment designers how to use that information but have never been able to do it. This information is useful for us; we understand what it means. If you do have a receiver that is frequency selective, then you can tell what you have; however, for a general type of electronic equipment that is not frequency selective, this information, we have found, is not too helpful. I suppose one way of testing would be to make both types of measurements. Another item I did not mention is that anyone can make a time domain transient measurement with an oscilloscope. For the other method you must have EMI equipment. You must take three readings per octave or, with MIL-STD-826A, five frequencies. You must exercise this particular single event probably about five times to get good readings. These single event transients vary so much, that repeated tests for every transient run the cost up astronomically. It has been our experience that, for a single event transient, you do not have any use for the data, and, to bring these generated levels down to the standard steady-state specification limits, you are unduly penalizing the program.

Paul Michaels: I have been listening to these discussions primarily as a user. I noticed that this particular specification for a single event transient is a very important one for most space experiments, particularly with regards to power lines. One of the prime considerations of most power supplies in a space experiment is that these power supplies will probably involve use of a series regulator, a transient filter, or a converter. The use of a transient specification, as you indicated previously, is very important. One always has the problem of questioning whether the transistors used in these filters, converters, etc., will be capable of taking a transient. A single transient can destroy these supplies. I think that the concept that you provided is a very useful one. It is the time and amplitude duration that is important. It is not particularly the harmonic content or the particular rise and fall time; those characteristics affect other aspects of design, but not the ability to survive a transient of this nature.

The other comment that I had was that it seems that, if one is concerned with the total power dissipation capabilities of your transient filter, your regulators, etc., you should regard the total energy in your pulse as really the difference of the positive spikes minus the lower than normal spikes. It is a thermal problem; at least that is the way I look at it. It is the difference in those energy contents that is important to whether your device will survive or not.

Guy L. Ottinger: We are proposing too that you run positive or negative spikes for the susceptibility testing, so that you do equal them. Actually, I believe, from the energy viewpoint, that it does not make too much difference whether it is positive or negative – the product of current squared, resistance, and time gives heating energy. It does make a difference in that some transistors are more sensitive to negative going energy than to the other.

J. T. McClanahan: I particularly enjoyed your remarks concerning the specifications. It seems that many people have tried to legislate EMI and it just cannot be legislated. The problem that I see and have watched is the practical application of specifications. When you have a contract, you must at least have an entry in that contract, not too specific, that talks about EMI. I like the JPL approach, something that is broad, that you can tie your hands to, ensure some good practical engineering design, and then practical application of waivers. We are finding out now in the Apollo Program, where we have had some pretty successful launches with a big bird and many people building different stages, that when we do this, through practical application of some existing specifications, we interface at the Cape with good results. Stacking the stages, idiosyncrasies have been found and fixed only because of a practical application of these specifications. They are necessary. I also feel that you may get a lot of waivers against a certain specification, but that it is not necessary to write another specification. It does not necessarily mean that the specification is a bad one. Once you have built something that works, and proved that it will work, how do you measure how much margin of safety you have from a susceptibility standpoint? What is a practical way to induce enough unwanted interference to give you a feel for how safely the system works? Do you have a 1-dB margin of safety or 2-dB? This, I think, is something that could stand investigation.

Guy L. Ottinger: Yes, we agree. I thought that 6 dB might be safe. In some cases, 20 dB is the correct amount, and sometimes, it should be more.

Robert G. Peltzer: I would like to make a plea to Mr. Ottinger to come off that business of increasing the radiation. The MIL-Specification levels are now at least 30 to 40 dB above our sensitivity levels. The University of Michigan Radio Astronomy Laboratory is trying to fly radiometers to measure the cosmic background noise, solar flares, etc. I think that you will find that I am not alone in this predicament; you will find that, as it is now, the VLF and ELF experiments, and anything else that is trying to measure any type of radiated fields, are in real deep trouble. We are looking for a 20-to-60-dB reduction in levels. We are not looking for a 40-dB increase in levels.

Guy L. Ottinger: No doubt about it, you have a special case. I guess the only thing we can do with you is to isolate you somewhere on the end of a boom as has been done. It is not a bad idea. Otherwise, we could enclose all the rest of our electronic equipment in a tight box. It certainly takes special precautions.

H. T. Howard: I would like to back up Mr. Peltzer. We have just undergone a rather harrowing integration on *Mariner V*. We have the same problem on *Pioneer*; however, basically the specification for *Pioneer* was MIL-I-26600, which was 50 to 60 dB above our discrete frequency sensitivity. While listening to the EMI fraternity talk about EMI specifications, I think that scientific experimenters would say: "We are coming into this and we constitute an exception." Basically, I think we understand your specifications, although I am not certain. We can meet your specifications with our instruments for our instrument's susceptibility to conducted interference, or your susceptibility to interference generated by our instrument, without any great difficulty. However, the problem is radiation from the spacecraft: radiation from harnesses, radiation from solar panels, all of the places where power is conducted over the spacecraft. Those who have sensors looking out can be totally wiped out by interference that is far below the sensitivity of the EMI equipment, and certainly below the sensitivities required in the specifications. I would like to caution you that when you see a scientific investigator coming along with something that hangs out in space, that goes into his instrument, that the rules of the game are going to be quite changed. He is going to be quite fussy, not about how high a spike is, or how long it is, but anything that is repetitive, anything that is likely to be there all the time. I do not think that you can write a meaningful EMI specification that will cover all these specific cases. Mr. Wolfe, in talking about an envelope of susceptibility, had a couple of spikes about halfway up the frequency scale that dropped clear down to the bottom. I think that he probably had in mind our experiment where, at 50 MHz for instance, we were susceptible to signals of −146 dBm. Now, this is a very serious problem to an EMI man who has a receiver that is sensitive only to, say, −110 dBm.

The other comment was a purely technical one concerning the use, in Specifications MSC-ASPO-EMI-10A and the old MIL-I-26600, of radiating to an instrument in a screen room. Your comment was that it is not like free space. It is worse than that. An antenna in a good screen room can only have a VSWR of infinity, because the screen room, after all, is a high Q device. It is a cavity, and, as you sweep from dc to daylight with your various signal generators, you find that the cavity is excited to resonances at various points – many points. It is certainly sensitive to the movement of people; any absorbing object that you move changes the standing wave pattern in the cavity. If the screen room is good, the standing wave pattern is going to have infinitely deep nulls; therefore, you will not have any radiation at these points. If it is a small instrument with a small pickup, and you are at some frequency, such as 50 MHz, where a wavelength is 6 m, then it is a very small part of a wavelength and it can very well be in a null in this field. So you have a requirement of say 6 dB in your measurement and you find that you cannot do a 30-dB measurement. If the instrument is moved a few feet, or if at the next test setup there is another piece of coax cable running around the room, the measurements are going to be different by 10 to 20 dB or 10 to 30 dB, depending upon the quality of the screen room. Therefore, radiating to an instrument and trying to see its response is tricky at best and probably not very repeatable. I think our experience on *Pioneer* was that the 26600 testing done on the scientific experiments did not help us. The test demonstrated that there were no radiated signals from the various boxes that were right on our frequency. Where the object of the specification is to produce something that is definite, that the system man can use, the results are subjective appraisals of what you have. I do not think that the systems man could look at it and say that these are going to be compatible. Therefore, I am cheering you in your attempt to obtain new specifications. I am glad to see that these specifications are in a state of flux because they have not been adequate, even from the systems point of view where everything is interconnected. I do want to caution the EMI fraternity that those who are conducting scientific experiments will question levels 30, 40, and 50 dB below current specification requirements.

Guy L. Ottinger: That is a serious problem for us. Obviously we do not have the answer for your sensitivity levels. We have run into a lot of experiments and, frequently, we are lucky that it is only a very narrow frequency spectrum that must be covered. We can go into the problem and use special techniques. However, if you want to go all the way from dc to daylight, then we must start all over again and devise a new system.

Ben Weinbaum: This is a very interesting discussion because it reveals the diversity of our interests and the fact that we all might have mutually exclusive requirements. The specifications, as we know them, can only lag the state-of-the-art because experimenters are doing new experiments. Radio astronomers have increased sensitivity requirements. On the other hand, we still have to get along with the same old airframes, or spacecraft. The spacecraft and vehicle personnel have tended to standardize and we like very much to have standard specifications, at least procedures that we all are familiar with. It seems to me that to realize an optimum solution to the problem of achieving compatibility, the EMC engineer must participate in the system engineering function, and the preliminary design and pre-proposal activity. He participates in the functional analysis of the missions so that he knows what information must be passed back and forth and what the power requirements are. Mr. Michaels is talking about the physical degradation, or the destruction of a component, whereas another gentleman may talk about the loss of information or the garbling of information. I think that these things should be recognized and

Discussion (contd)

that we should then attempt to write specific specifications, perhaps utilizing standard procedures and a good methodology for arriving at specification limits that are appropriate for the particular system of concern, and utilize measurement procedures and test techniques that are well understood and within the capability of the contractor, his vendor, or subcontractor. It is to provide a standard set of procedures for arriving at limits rather than trying to say what the limits are. I do not think that we will ever be satisfied with general limits or standard measurement procedures. In this area, many questions have been raised. For example, we are interested in the propensity of subsystems to generate interference. This means understanding the impedances across which, or through which, interfering voltages pass. At this time, we really have not solved that particular problem.

Paul P. Monroe: I would like to suggest, before we enter too far into this discussion, that we divide this meeting into two sections: (1) EMI energy, which pertains to equipment that might be damaged due to radiation, and (2) communication equipment used in deep space and scientific equipment. The two areas are not compatible. Mr. Ottinger speaks about whether we transmit enough energy to set off a squib and he may reduce the level at which the radiation will not affect the squib. On the other hand, if we have a receiver with a −160-dBm sensitivity, this receiver would be incompatible for maintaining communication at his cutoff level. I think, therefore, that we ought to be divided into two sections – deep space communication where sensitivities are very important, and energy transfer for equipment power supplies, transistors, etc.

Ben Weinbaum: We seem to have almost reached a standoff. We have a number of scientists in the audience, some of whom are unfortunately not engineers, and we have a lot of engineers who unfortunately are not scientists. We have talked about the various aspects of the equipment and the various sensitivities. We have talked about the requirements for specifications and we have also talked about contracts. Contract performance is great if you have an open-end contract that allows you to spend money after you have partially developed the program. However, this is unacceptable in some contracts where you have a fixed fee. In such a case, any waiver is a penalty. Therefore, we will dispense with the contract part of it. The specifications were written for the large weapon systems; they originated from DOD requirements and, unfortunately, most of our space experiments ride on the backs of boosters that were originally developed for DOD usage. Launch site requirements impose tremendous demands on the launch vehicles.

The new *Saturn* program would have done fine had we not had the very strong requirements of the launch site to worry about, primarily, the radiated fields. The tremendous interfaces that deal with our various pieces of equipment require us to develop certain specifications. We are at the point now where there should be a tremendous opening into the new scientific era for specification requirements and limits. Unfortunately, many engineers, myself in particular, have not really looked at the scientific aspect, and at the scientist's view of specification requirements and usages in this field.

Glenn A. Reiff: I would like to attempt answering the last two comments. I personally am delighted to see this standoff; I hope there are many more of them. This is getting to the heart of the reason why we thought a meeting such as this would be worthwhile. Certainly, spacecraft are a different breed of cats than missiles; they are different from airplanes. There are scientific requirements. Those involved directly in EMI need to obtain a better understanding of some of the scientific requirements. On the other hand, some of those who are building scientific instruments need to become familiar with developments which have taken place in EMI; therefore, I believe that things are going well.

References

1. *Electromagnetic Test Methods*, MIL-STD-826A, June 30, 1966.
2. *Addendum to MIL-I-26600*, MSC-ASPO-EMI-10A, National Aeronautics and Space Administration, Oct. 17, 1963.
3. *Electromagnetic Interference Control Requirements and Electrical Interface for Agena Systems, Specifications for*, Lockheed Missiles & Space Co. 447969B, Aug. 1, 1962.
4. Pearlston, C. B., Jr., *Electromagnetic Compatibility Requirements for Space Systems*, Report No. TOR-1001 (2307)-4, Rev. 2, Aerospace Corporation, El Segundo, Calif., Nov. 8, 1966.
5. *Electromagnetic Interference Characteristics Requirements for Equipment*, MIL-STD-461, July 31, 1967.

References (contd)

6. *Electrical–Electronic System Compatibility and Interference Control Requirements for Aeronautical Weapon Systems, Associated Subsystems and Aircraft,* MIL-E-6051C, June 17, 1960, Amendment No. 1, Sept. 10, 1964.
7. *Electromagnetic Compatibility Requirements, Systems,* MIL-E-6051D, Sept. 7, 1967.
8. Pearlston, C. B., Jr., *Historical Analysis of Electromagnetic Interference Limits,* Report No. TR-1001 (2307)-12, Aerospace Corporation, El Segundo, Calif., April 1967.
9. Ertman, R., and Schanker, J., "Graphical Comparison of Military RFI Specifications on the Basis of Field Intensity," *Microwave J.*, Sept. 1966.

PRECEDING PAGE BLANK NOT FILMED.

N69-25429

Electromagnetic Compatibility/System Design Management Plan

Thomas G. Walter
TRW Systems Group
Redondo Beach, California

I. Introduction

Since the discovery of the first electronic circuit malfunction caused by an extraneous signal, design engineers have treated the strange and sometimes mystifying phenomenon of electromagnetic interference (EMI) as a "black art." In bygone days, the control of this alleged curse was left to the test engineer and laboratory technician who usually mastered the particular problem by curing the symptoms.

As time progressed and certain problems appeared with repeated characteristics which resulted in similar "fixes," efforts were made by governmental agencies to control compatibility problems between the many "black boxes" comprising their complex systems. The nature of these controls took the form of what are now EMI specifications. Being all-encompassing to solve every kind of problem imaginable, these specifications had an opposite effect to optimizing a system design, although they did eliminate many of the standard EMI problems. This "brute force" approach of reducing all EM emanations from each equipment, while requiring that it be capable of withstanding an artificial EM environment, was adequate for many years, because the system constraints of weight, space, and power were not usually the limiting factors of system cost.

The purpose of this paper is to present a system design management plan which is capable of keeping pace with the driving trend toward sophistication in the present day aerospace systems. Before delving into the details of the plan, it would be helpful to summarize the driving philosophy behind it.

Electromagnetic compatibility (EMC) should be the result of a conscientiously engineered system design which balances the generated EM environments of the system being designed with the EM sensitivities of the system equipment and the functional performance requirements. The implementation of this concept ensures the achievement of an electromagnetically compatible system through the control of inter-, as well as, intra-system interface characteristics and performance parameters.

While the details of the concepts described in this paper are in a continuing process of refinement, the methods have been successfully implemented on *Pioneer VI*, Vela Advanced Spacecraft Project (VASP), and *Intellsat III.*

The most complete implementation of these concepts is currently taking place on Air Force Program 949. The plan presented herein is, therefore, not a figment of imagination, but a vital, practical, and living part of an existing total team management concept.

II. System Design Approach

The system design approach is basically a detailed implementation of the concept of maintaining a balance between the generated EM environment and the EM sensitivities of the equipment. This balance must be achieved by design, not chance. To achieve this goal, the normal program can be broken into phases, as shown in Fig. 1. Each of these phases contains a logical sequence of design activities which, when properly guided, will result in an optimum compatible system design. The following portions of this section are devoted to describing, in a simplified manner, a proven way in which a compatible system can be designed.

A. Phase 0—Preliminary System Design

If it is assumed that the normal feasibility studies and marketing activities have been successful, the program begins upon receipt of a Request for Proposal (RFP), often from a government agency. If the RFP is assumed to be typical, it will contain a very brief description of the required system performance characteristics and a tremendous number of qualifying constraints, such as weight, environment, reliability, quality assurance, delivery and marking, launch vehicle, and, sometimes, EMI/EMC.

The first step facing a company trying to respond to the RFP is to define a conglomeration of hardware which will functionally satisfy the required system performance parameters and, at the same time, attempt to satisfy all the constraints. This first step is probably one of the most crucial steps in achieving a compatible system design. It is at this point that the system design engineer must influence the basic system configuration so as to avoid gross compatibility problems. At this stage of development, a typical situation might be a desire to employ sensing equipment which intentionally monitors very low-level broadband VHF energy while, in the same system, attempting to implement a high-audio-frequency squarewave ac power distribution scheme for the system.

Concurrently during this Phase 0 activity, the basic compatibility program approach must be defined. The compatibility program must be geared to accommodate the system performance requirements as well as constraints and, at the same time, optimize the hardware design performance in a cost-effective manner. This preliminary program plan should define for the customer which requirements will be met and also those which will not be met. In the latter case, a positive alternate must be defined to allow the customer some flexibility in arriving at an acceptable contractual work statement and budget allocation.

A typical requirements problem area is an RFP specification, such as EMC or environmental, being idealistically severe. In such cases, it is obvious to everyone that the many requirements must be relaxed (some cases may need to be more stringent). However, because of the preliminary nature of the system design, there is not enough information available to propose a meaningful set of alternate requirements. One possible solution to this dilemma is to propose a revision to the specification stating that the particular problem requirements will be accepted as interim requirements until such time as the contractor can propose technically justifiable and realistic requirements. In addition, as a part of the response, a positive plan should be proposed to allow the derivation of realistic requirements at some fixed time before the end of Phase I of the program, as indicated in Fig. 1 and described later in Phase II.

B. Phase I—Detail System Design

Once a work statement has been negotiated and a budget authorization has been given, the real task of influencing the various subsystem design efforts to achieve a compatible system begins. From the finally agreed upon program performance requirements, the task of allocating the compatibility requirements to various subsystems can be initiated. Of primary concern is the allocation of electrical parameters to the subsystems. Since power, command, and telemetry functions comprise approximately 80% of all subsystem interfaces, the characteristics and implementation of these functions are most critical in affecting system compatibility. It is wasted effort and false economy to require very stringent controls on the power interfaces and some nebulous radiated environment limit on a complete subsystem if the circuit designers are left to their own imagination in designing the signal interfaces. As an example, the normal approach to controlling the EM profile of a subsystem is to limit the amount of "undesirable" energy of a power line and the radiated energy of the subsystem. If

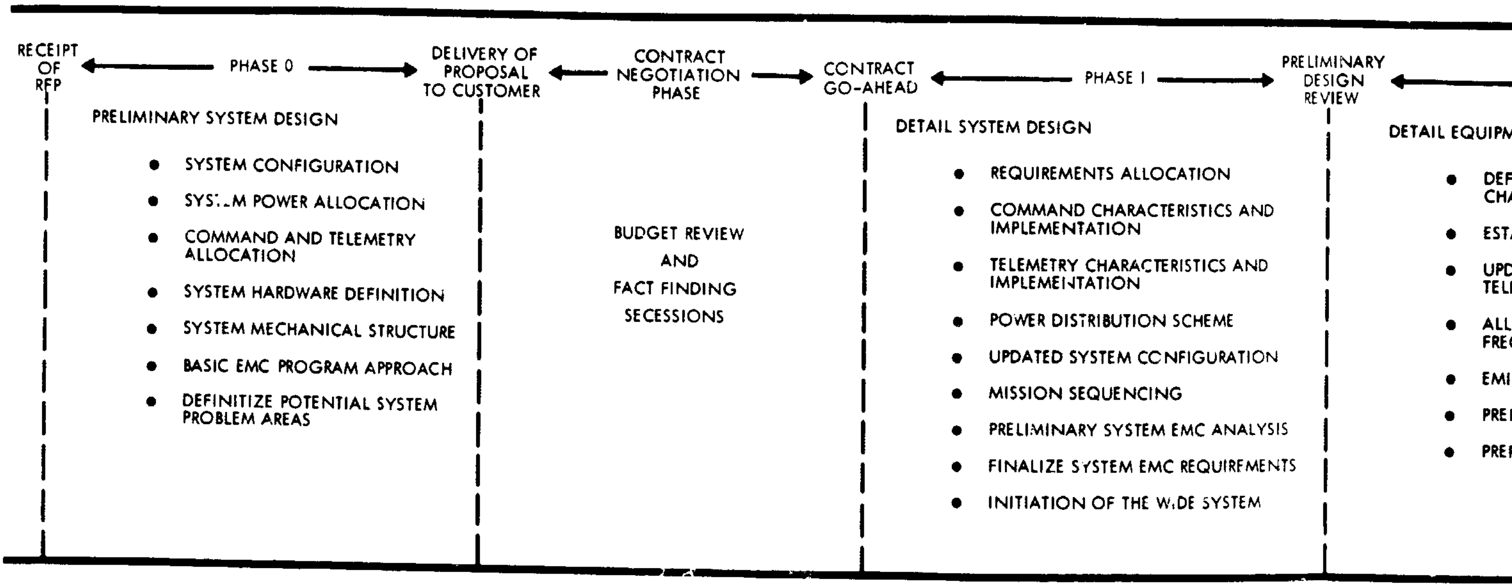

PRELIMINARY SYSTEM DESIGN

- SYSTEM CONFIGURATION
- SYSTEM POWER ALLOCATION
- COMMAND AND TELEMETRY ALLOCATION
- SYSTEM HARDWARE DEFINITION
- SYSTEM MECHANICAL STRUCTURE
- BASIC EMC PROGRAM APPROACH
- DEFINITIZE POTENTIAL SYSTEM PROBLEM AREAS

BUDGET REVIEW
AND
FACT FINDING
SECESSIONS

DETAIL SYSTEM DESIGN

- REQUIREMENTS ALLOCATION
- COMMAND CHARACTERISTICS AND IMPLEMENTATION
- TELEMETRY CHARACTERISTICS AND IMPLEMENTATION
- POWER DISTRIBUTION SCHEME
- UPDATED SYSTEM CONFIGURATION
- MISSION SEQUENCING
- PRELIMINARY SYSTEM EMC ANALYSIS
- FINALIZE SYSTEM EMC REQUIREMENTS
- INITIATION OF THE WIDE SYSTEM

DETAIL EQUIPM

- DEF CHA
- EST
- UPD TEL
- ALL FRE
- EMI
- PRE
- PRE

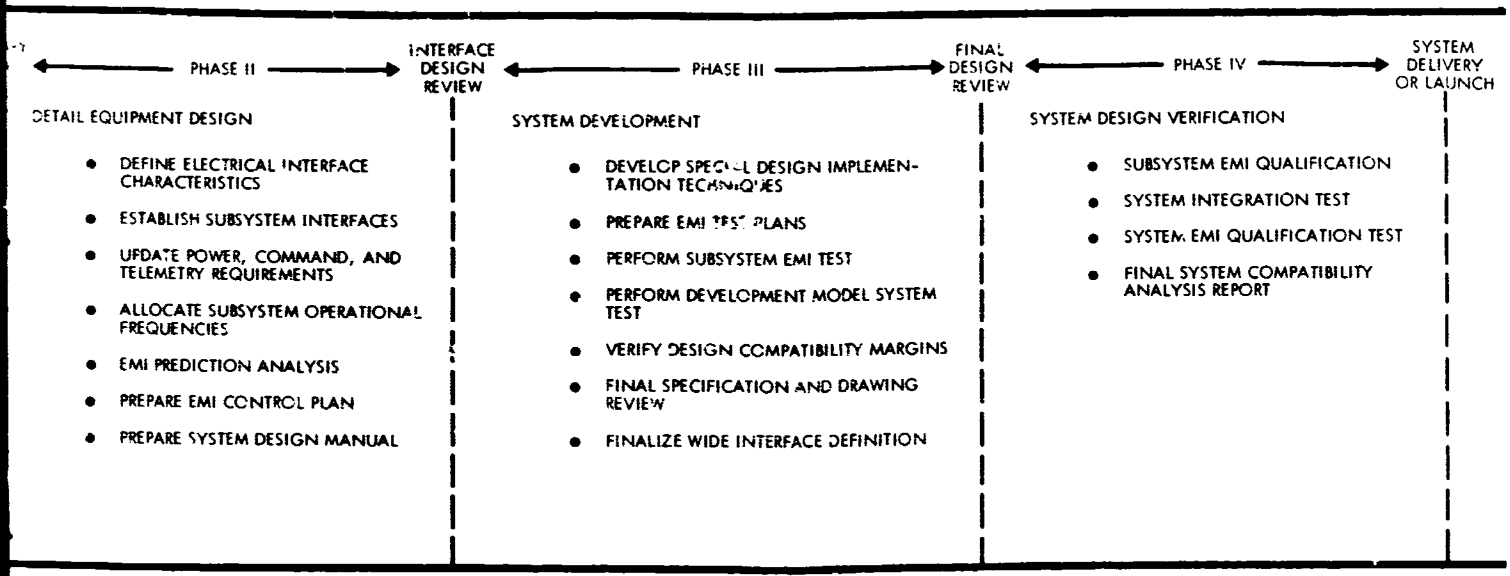

Fig. 1. System compatibility design program breakdown

21-B

PRECEDING PAGE BLANK NOT FILMED

the subsystem fails to comply with these limits, the subsystem equipment and cabling are blindly modified to comply with the specification limits. This is usually accomplished in a very inefficient manner in terms of the system design. In most cases, the system design approach requires that each equipment be analyzed to determine its worst-case sensitivity to extraneous energy. Once a profile has been established which defines the most sensitive system element at any frequency, an analysis can be completed which will define, not only the best EMC requirements for the system, but also the constraints which are necessary for all the system interfaces to ensure compliance with these requirements.

As an example, assume that the sensitivity of each equipment is defined. The compatibility limits should then specify the allowable spectral density (with an appropriate safety margin) which may be carried on any conductor or radiated from any equipment so as not to exceed any other equipment sensitivity. This concept is illustrated in Fig. 2.

The general approach for analyzing the system to establish the composite sensitivity profile and, thus, the most realistic EMC limits, is illustrated in Fig. 3. As indicated, the allowable generation limits are determined by transforming the worst-case sensitivity of each equipment, through the appropriate transfer function, into an equivalent voltage or current level on an adjacent conductor in a typical system cable harness. Taking the composite profile of all the system equipment transformed sensitivities, the complete frequency range of interest can be mapped and the compatibility limits established by adding reasonable safety factors. The outgrowth of this analysis is a concrete basis for defining the proper program EMC requirements or to request quantitative deviations from existing program requirements.

Based upon the results of the compatibility limits derivation, a very important tool for defining and controlling electrical interfaces is established during the Phase I activities. This interface control tool is referred to as Wiring Integration Design Engineering (WIDE). The basic concept of this system is the utilization of the standard 80-column IBM card format to identify electrical interfaces in terms of functions, characteristics, and routing.

The key advantages of the concept are speed, flexibility, and a mechanical means of matching interfaces between subsystems. When WIDE is employed, time-consuming preparation of wiring diagrams is eliminated, and the normally difficult-to-spot errors of inconsistency or non-correlation are made immediately obvious. Wire shielding, grouping, and routing are readily controllable with this concept. WIDE is being effectively used as an interface design as well as a production tool for producing the system electrical cable harness. The concept can also be expanded to provide a mechanism for feeding interface information into a separate computerized system compatibility model.

C. Phase II—Detail Equipment Design

The activities during this phase of the program really prove the worth of the system design approach to compatibility. The system designer utilizes the results of the compatibility analysis of Phase I to improve the equipment design in the most cost-effective manner.

The key element during this phase is the EMI prediction analysis. This analysis identifies the degree of isolation required for power as well as signal interfaces. In addition, the results of this analysis will influence all electrical interfaces, as well as the equipment packaging design. The flow diagram in Fig. 4 outlines the general approach to the EMI prediction analysis based upon the rudimentary equipment design necessary to satisfy the functional performance parameters.

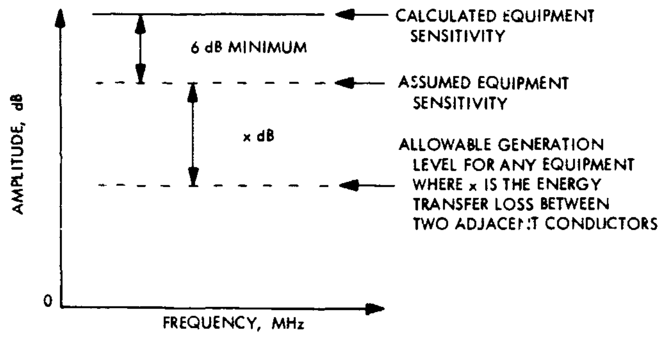

Fig. 2. Illustration of equipment sensitivity relationship to the establishment of allowable interference generation levels

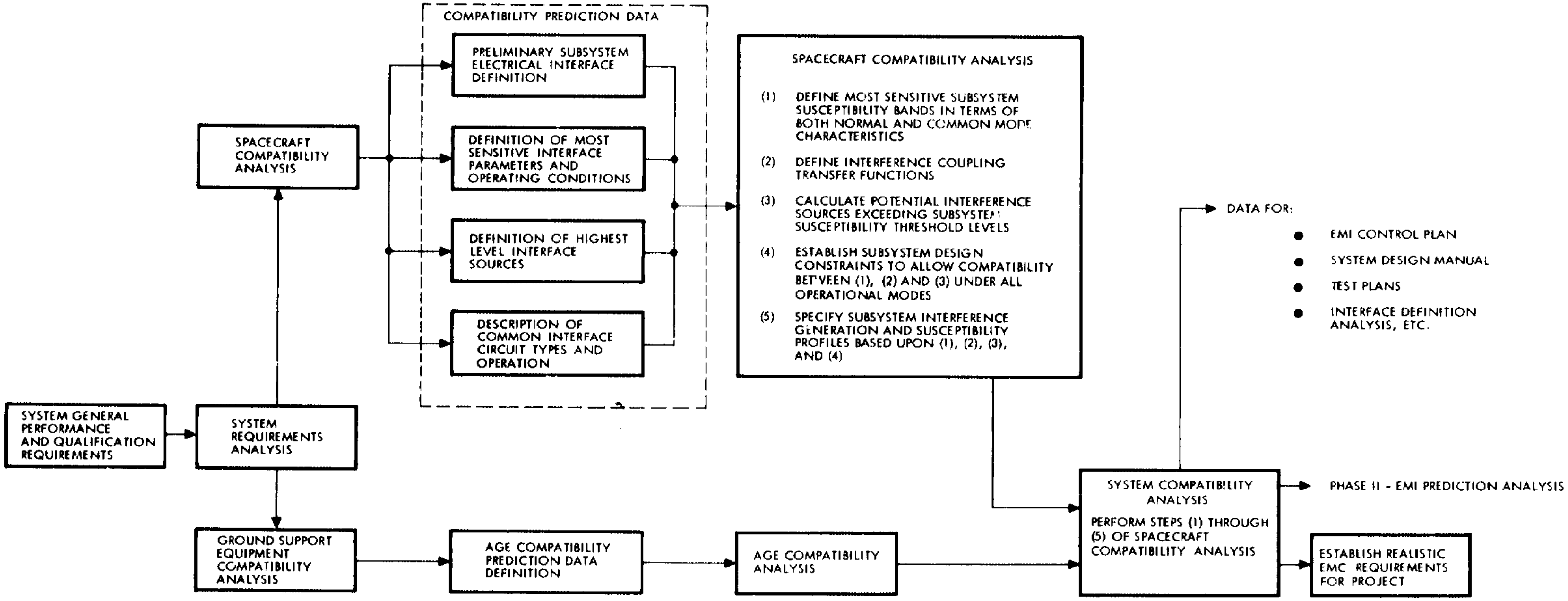

Fig. 3. System EMC analysis approach for developing realistic EMI limits

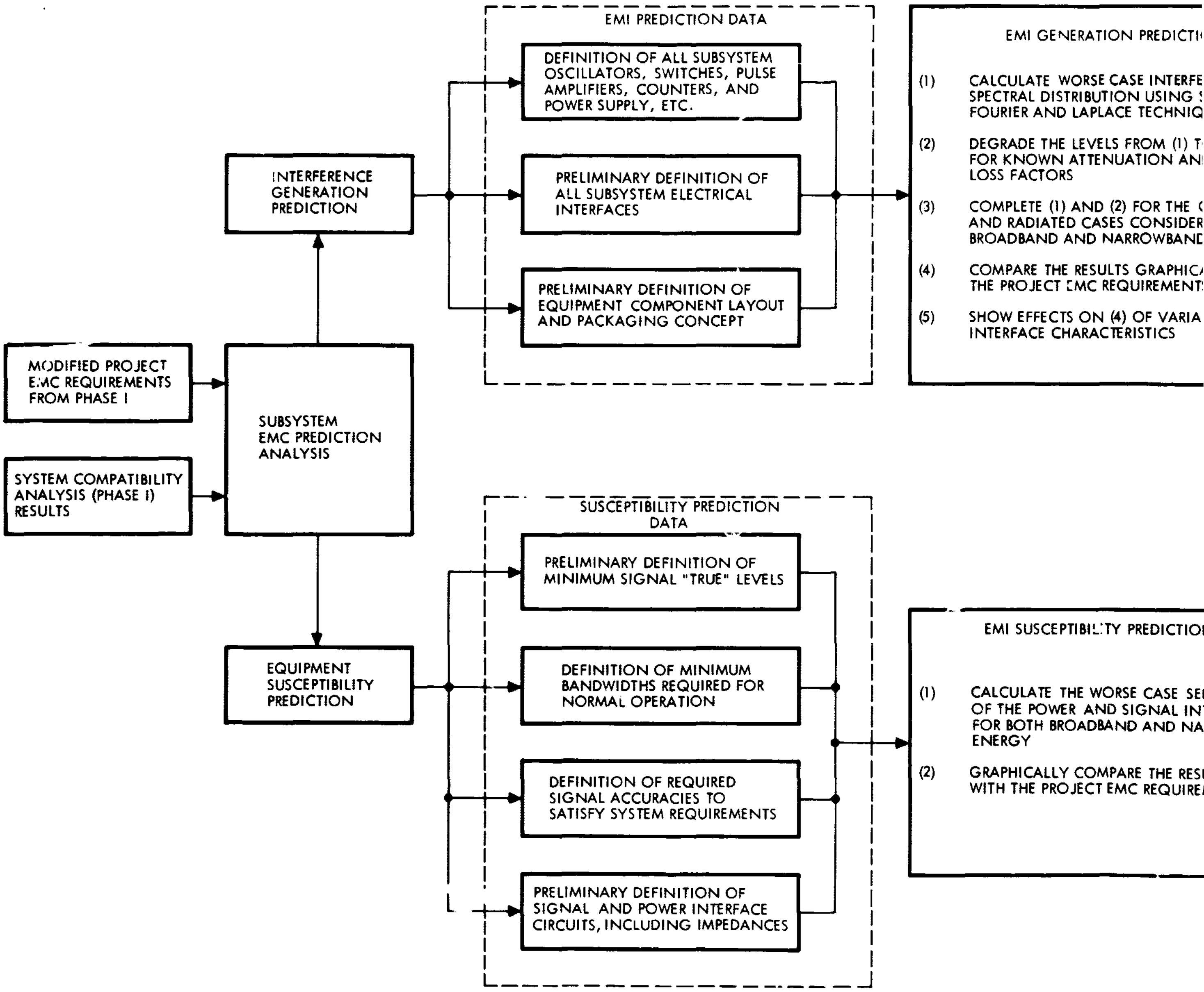
EMI PREDICTION DATA
DEFINITION OF ALL SUBSYSTEM OSCILLATORS, SWITCHES, PULSE AMPLIFIERS, COUNTERS, AND POWER SUPPLY, ETC.
PRELIMINARY DEFINITION OF ALL SUBSYSTEM ELECTRICAL INTERFACES
PRELIMINARY DEFINITION OF EQUIPMENT COMPONENT LAYOUT AND PACKAGING CONCEPT
INTERFERENCE GENERATION PREDICTION
EMI GENERATION PREDICTI
(1) CALCULATE WORSE CASE INTERFE SPECTRAL DISTRIBUTION USING FOURIER AND LAPLACE TECHNIQ
(2) DEGRADE THE LEVELS FROM (1) T FOR KNOWN ATTENUATION AN LOSS FACTORS
(3) COMPLETE (1) AND (2) FOR THE AND RADIATED CASES CONSIDER BROADBAND AND NARROWBAN
(4) COMPARE THE RESULTS GRAPHIC THE PROJECT EMC REQUIREMENT
(5) SHOW EFFECTS ON (4) OF VARIA INTERFACE CHARACTERISTICS
MODIFIED PROJECT EMC REQUIREMENTS FROM PHASE I
SYSTEM COMPATIBILITY ANALYSIS (PHASE I) RESULTS
SUBSYSTEM EMC PREDICTION ANALYSIS
SUSCEPTIBILITY PREDICTION DATA
PRELIMINARY DEFINITION OF MINIMUM SIGNAL "TRUE" LEVELS
DEFINITION OF MINIMUM BANDWIDTHS REQUIRED FOR NORMAL OPERATION
DEFINITION OF REQUIRED SIGNAL ACCURACIES TO SATISFY SYSTEM REQUIREMENTS
PRELIMINARY DEFINITION OF SIGNAL AND POWER INTERFACE CIRCUITS, INCLUDING IMPEDANCES
EQUIPMENT SUSCEPTIBILITY PREDICTION
EMI SUSCEPTIBILITY PREDICTIO
(1) CALCULATE THE WORSE CASE SE OF THE POWER AND SIGNAL IN FOR BOTH BROADBAND AND NA ENERGY
(2) GRAPHICALLY COMPARE THE RES WITH THE PROJECT EMC REQUIRE

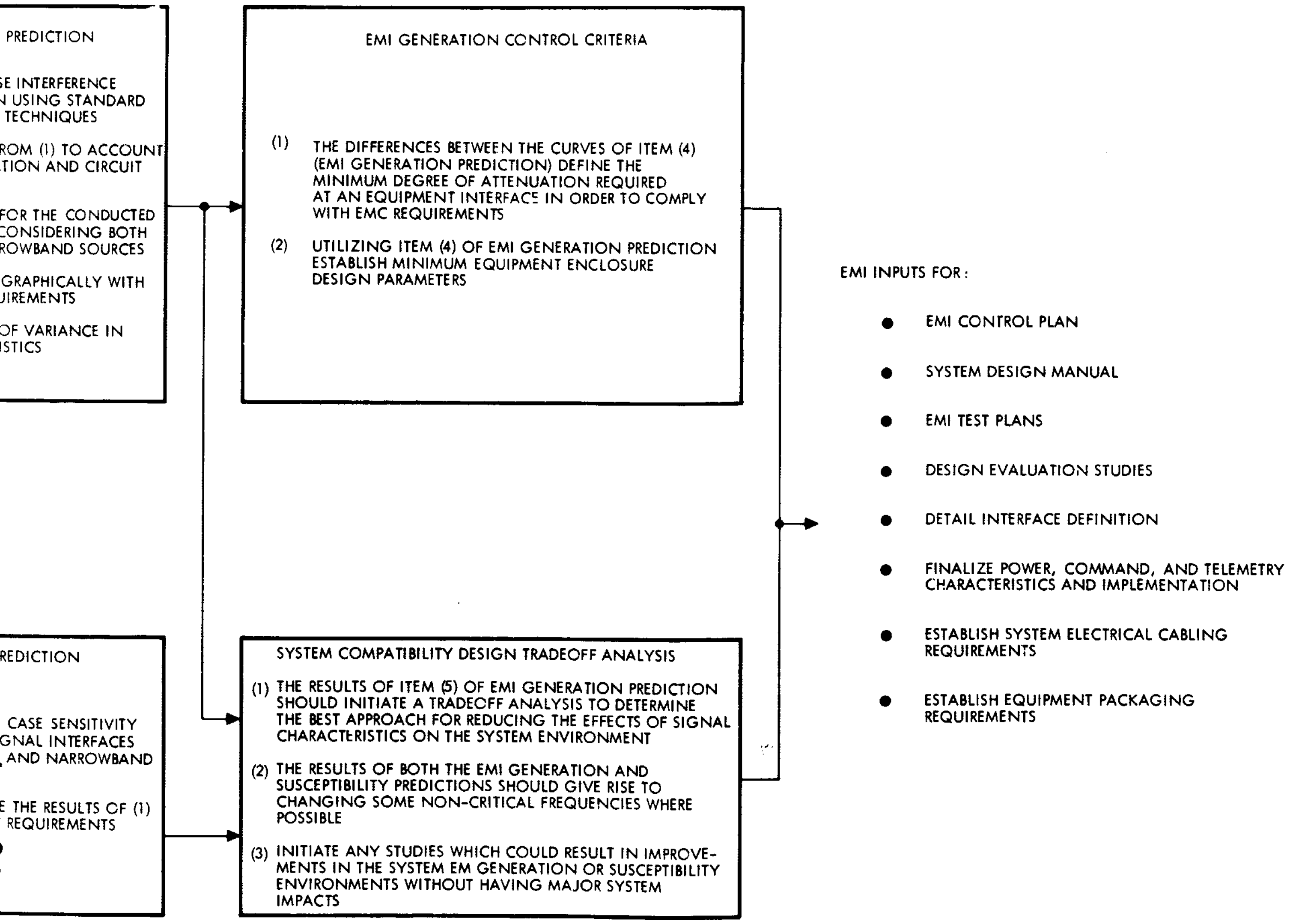

EMI GENERATION CONTROL CRITERIA

(1) THE DIFFERENCES BETWEEN THE CURVES OF ITEM (4) (EMI GENERATION PREDICTION) DEFINE THE MINIMUM DEGREE OF ATTENUATION REQUIRED AT AN EQUIPMENT INTERFACE IN ORDER TO COMPLY WITH EMC REQUIREMENTS

(2) UTILIZING ITEM (4) OF EMI GENERATION PREDICTION ESTABLISH MINIMUM EQUIPMENT ENCLOSURE DESIGN PARAMETERS

SYSTEM COMPATIBILITY DESIGN TRADEOFF ANALYSIS

(1) THE RESULTS OF ITEM (5) OF EMI GENERATION PREDICTION SHOULD INITIATE A TRADEOFF ANALYSIS TO DETERMINE THE BEST APPROACH FOR REDUCING THE EFFECTS OF SIGNAL CHARACTERISTICS ON THE SYSTEM ENVIRONMENT

(2) THE RESULTS OF BOTH THE EMI GENERATION AND SUSCEPTIBILITY PREDICTIONS SHOULD GIVE RISE TO CHANGING SOME NON-CRITICAL FREQUENCIES WHERE POSSIBLE

(3) INITIATE ANY STUDIES WHICH COULD RESULT IN IMPROVEMENTS IN THE SYSTEM EM GENERATION OR SUSCEPTIBILITY ENVIRONMENTS WITHOUT HAVING MAJOR SYSTEM IMPACTS

EMI INPUTS FOR:

- EMI CONTROL PLAN
- SYSTEM DESIGN MANUAL
- EMI TEST PLANS
- DESIGN EVALUATION STUDIES
- DETAIL INTERFACE DEFINITION
- FINALIZE POWER, COMMAND, AND TELEMETRY CHARACTERISTICS AND IMPLEMENTATION
- ESTABLISH SYSTEM ELECTRICAL CABLING REQUIREMENTS
- ESTABLISH EQUIPMENT PACKAGING REQUIREMENTS

Fig. 4. EMI prediction analysis for supporting the detail equipment design phase of a system hardware project

25-B

PRECEDING PAGE BLANK NOT FILMED.

As indicated in Fig. 4, one of the outputs of the prediction analysis is an input to the definition of interface signal and power characteristics which will allow compliance to the program EMC requirements with minimum cost and weight impact on the system. The actual definition of the interface parameters is accomplished by a tradeoff analysis wherein the weight and relative cost of the components required to adjust the interface characteristics is compared to the weight and relative cost of containing the interface signal and power interference energy within the system cabling.

The final results of the EMI prediction and the system electrical interface analysis permit the detailed definition of the command, telemetry, and power characteristics and implementation scheme. In addition, the results of this analysis provide the input for formulating the design criteria which are normally documented in formal publications such as the EMI Control Plan and the System Design Manual. The topics typically considered in these formal documents are presented in Table 1. The exact allocation of topics treated in each document is a function of the type of project being worked and the customer requirements.

Table 1. Topics considered in the EMI Control Plan and System Design Manual

EMI control plan	System design manual
Project implementation plan	Detail circuit design criteria
System electrical reference (bonding)	Detail packaging criteria
Subsystem design criteria	Internal equipment grounding criteria
Cable harness criteria	Filtering and circuit isolation criteria
Frequency management considerations	Interface signal characteristics
System electrical grounding	Detail cabling design
Quality assurance provisions	Power, command, and telemetry implementation
	Surge current limitation
	Thermal versus electrical design criteria
	Power quality

D. Phase III—System Development

The primary activity during this phase of the program is one of liaison engineering, development test and evaluations, development model equipment test, and a final review of subsystem specifications and drawings.

The role of system design changes during this phase to one of system development and design margin verification. To adjust to this role, it is necessary to have personnel knowledgeable in the design activities, product engineering, and verification testing. It is during this phase of the program that design compatibility margins established during Phases I and II are verified. In addition, such problem areas as printed circuit board layout, circuit grounding, and equipment enclosure design are evaluated and appropriate modifications incorporated.

E. Phase IV—System Design Verification

This phase of the program is a wrap-up operation for the previous four phases. The activities performed during this phase are primarily concerned with the formal verification and documentation of the system design. The high point of this phase is the completion of the formal EMI Qualification Test and final system compatibility analysis report. This final report is intended to show the comparison between the interim compatibility analysis and the final system design and verification test results as illustrated in Fig. 5.

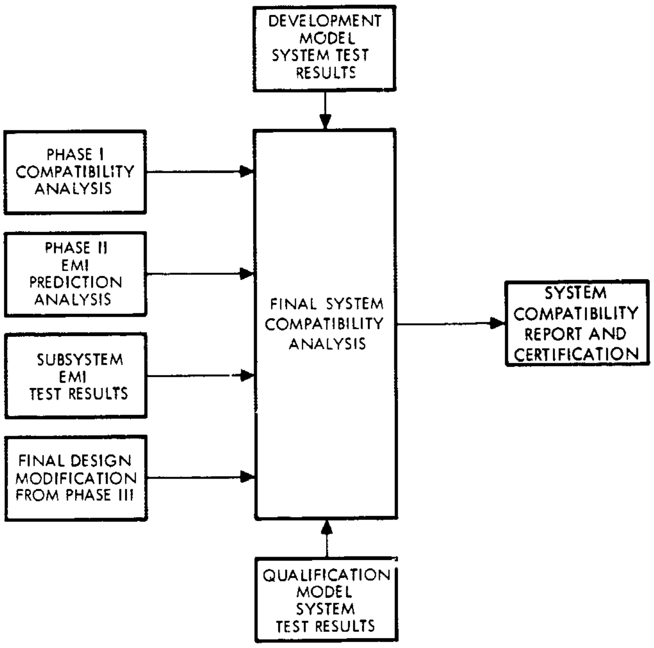

Fig. 5. Final verification analysis to ensure delivery of a compatible system

III. Management Organization

It is appropriate at this time to discuss a TRW management organization for supporting this system compatibility through system design approach. This is necessary because it is felt that this approach to EMC is believed rather unique in the aerospace industry.

The first step to understanding the implementation of the system design approach is to examine the basic structure for handling space system contracts under the team management concept. Within the division of the company assigned the responsibility for hardware system activities, there are several operations, each of which has a specific charter to provide a unique capability in support of the division charter. From a functional area within one such operation, personnel are drawn for staffing the "System Design Teams," of which EMC engineering is an integral part. From this unique position on the various projects, as shown in Fig. 6, the system design personnel have the visibility and access to the resources, across all projects, which are necessary to accomplish system compatibility through system design.

IV. Contractual Implications

As indicated previously, there are some unique contractual problems which arise from the attempted implementation of the system compatibility through system design philosophy. The most noteworthy consideration centers around the need by the contracting agency to have some formal contractual agreement, concerning EMC requirements, in effect at the time of contract negotiation. One possible solution to this problem was presented earlier in Section II-A.

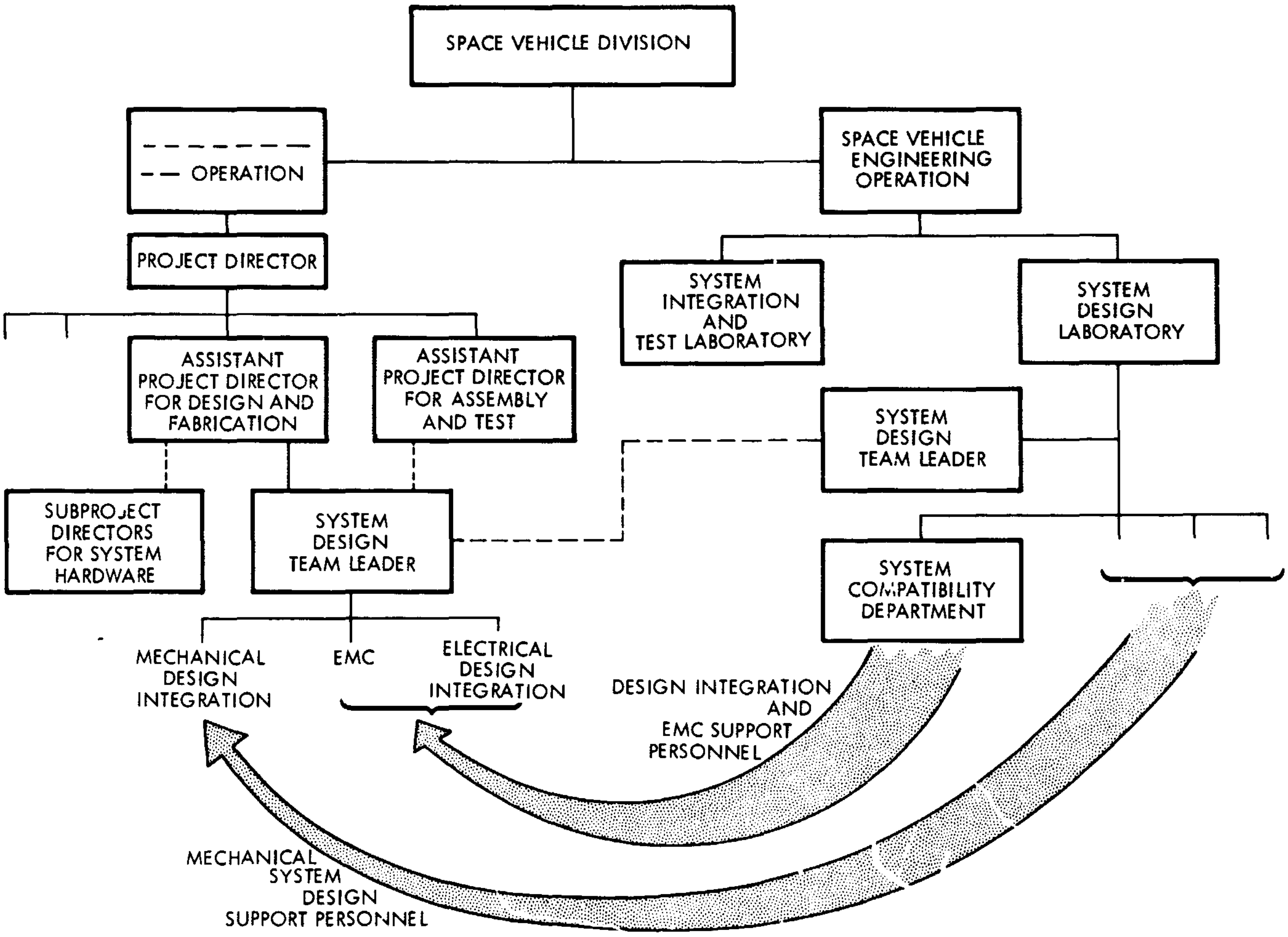

Fig. 6. System design team functional organization

An alternate and, perhaps, more desirable solution to this dilemma is presently in existence in all the EMI/EMC specifications. It is standard procedure to identify deviations, with supporting justifications, in the EMI Control Plan which, when approved, supersedes the problem requirements of the contractual EMI/EMC specifications. In either case, it should be noted that all contracting agencies have thus far been very receptive to considering modifications to EMI/EMC specifications, provided proper justification can be demonstrated.

V. Conclusion

The system design plan to achieve system compatibility, as presented herein, is actually not a new concept. The idea of making EMC an integral part of the system design activity has been in the minds of many people within the EMC discipline for many years. The distinctive feature of the plan discussed in this paper is that this EMC "dream" has been practically demonstrated. This realization is now generating new areas of activity and stimulates the technical environment from a specification compliance goal toward a true fulfillment of the underlying intent of the normal EMC objective.

As indicated previously, this concept of achieving compatibility is not divergent from the philosophy behind the current military specifications. The system design approach will not jeopardize the standardization concept. If properly implemented, this latter approach will actually broaden the base for standardization in that the contracting agency will have more information on the actual performance data of the equipment, and thus will be able to better define its characteristics for use and interrelationship with other programs.

This paper provides only a brief glimpse into one feasible system design approach to EMC. The main benefit to be gained from it is a reawakening of the EMC society to the procedure for raising EMC from the grasp of the "art" world to a science.

Discussion

Thomas G. Walter: The basic approach during Phase I is that the EMC engineer works with the mechanical system design personnel and electrical system design personnel to adequately define all the interfaces, characteristics, impedances, routing of the cables, location of the circuit, etc., within the boxes.

In the Phase II prediction analysis, you define what the equipment is going to generate and then take a closer look at what it might be susceptible to. In calculating the generation levels, you fall back on the standard Fourier or Laplace transforms for the spectral distribution. A set of energy transfer functions are defined and a spectral distribution defined for each box. The spectral distribution prediction and the transfer function that has been calculated can now be compared to the EMC specification limit that you are working to. You can then define in detail what attenuation you need, either conducted or radiated-wise, to comply with the compatibility specification that you developed.

The key point in the achievement of this plan is that all of the personnel who make up the design team are from the same functional organization within the company. They are only on loan to the project. They only support the project for the duration of that particular project. At the conclusion of the project, they revert back to their functional organization where they are given a chance to update their knowledge, determine what has happened in the Research and Development programs of their functional organization since they left, and are then reassigned to another project. The beauty of a system like this is that you have a very good cross-fertilization of information from program to program. You also have a set mechanism for having a continuing support for a program. It is more than support; you are a recognized project office official in this capacity. When a decision is made, it must consider not only EMC or electrical system design, but schedule, cost, weight, reliability, etc. This forces the EMC individual to broaden his viewpoint. This is more of a system engineering approach to EMC than anything that I have seen in the past. It is not just a concept, it is a reality – it has been used and it works.

George N. Burkhardt: Mr. Walter used terms that are cropping up increasingly in the space business, Interface, Interface Definition and Interface Control. One thing that I noticed in his Phase 0, that was conspicuous by its absence, was that the primary mission objectives for the spacecraft were not defined. Subsequently, system definition becomes a problem. Secondly, in Phase II it was subordinated.

Also, my personal experience in the definition of the Command and Telemetry System is that the basic characteristics of the system are fixed, including the number of words, although I have even seen words changed in a system. However, the basic telemetry formats were fixed to the extent of the type of signal you get, the level through the analog-to-digital converter, the energy in the PCM bit stream, etc. It is my experience that, with this system, the telemetry format is continuously changing and this is one of the jobs which drives the interface personnel insane. The operations personnel have a problem because the systems engineer has requirements dependent on them. The space scientists have created

Discussion (contd)

great problems in space projects by conceiving scientific systems that have unique data formats which were not originally intended for the system. If the system is adequately designed and the overall mission objective and possible mission objectives are really defined in the beginning, you will not have this type of a problem.

A final thing that worried me was that, after the systems integration test was completed, there was an EMI qualification. It seems to me that, if the systems integration test is satisfied and is properly executed, you have attained system compatibility and, therefore, the EMI qualifications have been met.

Thomas G. Walter: First of all, we assumed that at the Phase 0, when you get an RFP, it will normally define the program mission requirements, the functional requirements, and what the spacecraft is supposed to do. If you remember, the Design Team worked directly for the Project Office. The thing that I did not say is that, from the time the company first starts to look for possible contracts and possible business, this design team is in existence. It may be only one man at that time; however, there is somebody there with the Project Office to do the feasibility studies, etc. throughout the program. Therefore, we are aware the minute someone has a concept or an idea for measuring a phenomenon in space and what they might have to use to measure this particular phenomenon. We can then assess whether it is going to be in any way a major compatibility problem with the rest of the vehicle.

As far as word formating goes, the thing that I was indicating here about telemetry characteristics and implementation is not word formating. The slot in the main frame, for example, does not bother me; it is what that signal level looks like from the sensor to the analog-to-digital converter and the A to D bandwidth that I am worried about. This cannot be a continually changing thing because, if it is, you cannot commit yourself to a firm schedule. You have to pin signal characteristics down so that at some stage in the program no further changes are made. The only time you change is when a customer directs you to change. You would have to go back through and reassess what the impact is and possibly modify your requirements at that time.

Henry M. Hoffart: I would like to point out that, in management at General Electric, we hold in-house seminars where we bring in all the electrical and mechanical design personnel and go over the specific black box designs. This is in Phase I. What we do at that time is to show the relationship between the fields that normally will exist about the vehicle, the coupling factors into the black boxes, and cable-to-cable coupling factors. This then presents the design engineers, both electrical and mechanical, with the parameters within which they must function in designing their equipment. Thus, we can lay out the wiring properly, provide the proper shielding, and provide ultimate EMC for the equipment.

Thomas G. Walter: We have a similar thing to seminars, but they are probably not as formal as those that you are mentioning. We have a number of scheduled meetings with the designers to (1) familiarize them with the requirements; (2) solicit their assistance in formulating the system requirements that we are going to negotiate with the customer; and (3) establish a working rapport with them, so that they understand our problems and we understand theirs. This working relationship varies from box to box, depending upon what the circuit might be. An RF man, for example, has a better understanding of some of the problems we are talking about than a power subsystem man in many cases. Therefore, the meetings are usually scheduled according to the type of subsystem that will be discussed.

Richard H. Kelkenberg: When you mention that you are talking the designer's language, I, more or less, see your general viewpoint. However, how do you operate in detail? When you say you talk in the designer's language, are you talking in terms of decibels above microamperes per megahertz, or are you talking about frequency spectra? If you could give more details of how you actually implement this down into the day-by-day type of terminology, this is what I would be interested in hearing.

Also, on your chart, it seemed as if you put more emphasis on the prediction study of seeing how much your generation was, rather than on how much the susceptibility was. How do you handle setting a control on susceptibility?

Thomas G. Walter: The designer's language depends on the type of hardware the designer is building. If you are talking to an RF man about a transmitter, he talks about the efficiency of conversion of DC power to RF and modulation characteristics. If he talks about a phase modulator, you must know the language of the phase modulator, how many volts it takes to get a certain number of radians of shift in the output. If you are talking to a telemetry man, you must be able to talk in terms of how the analog-to-digital converter performs, what the sampling rates are, what the clock words are, how wide the word gates are, and how critical is the phase difference between the clock and the word gate. When talking about the characteristics, then you must define rise and fall times of the signal. For example, how does the signal influence the phase relationship between the clock and the word gate and the data output? If talking about an analog signal you get into accuracies. If you use an eight-bit telemetry system you are normally talking about 3.5% accuracy on the signal. Do you really need that kind of accuracy? What happens if you have 5% accuracy; does this ruin your measurement, or do you need tighter than a 3.5% accuracy?

You have to talk with telemetry personnel concerning the type of hardware that he is going to use in this box. Generally, this is a standard set up by the Project Office where you either select all integrated circuits, or all discrete components, or something similar to that. Therefore, very early in the program, you know whether you are talking about discrete components or integrated circuits. Then, you worry about things like sync currents, true-state voltages and currents, and the impedance of matched interfaces between the different types of logic. You do not normally want to match a Fairchild 9040 with some other type of logic that is incompatible. These are the types of things you can get into. You must be able to understand and talk the language.

Richard H. Kelkenberg: Do you replace the EMI specification with this procedure?

Thomas G. Walter: No! The EMI specification as we use it is generally a formal document that someone familiar with EMI could look at from the outside and say that these are our requirements. It is not generally used in that much detail within the company. Most of our design requirements, or the implementation for meeting the specification, is handled through the design manual. This manual is a Project Office control document for each program. It defines all the design requirements for a designer. The designer must meet the requirements in the design manual. The manual is the standard that he is reviewed against. If you have a particular way in which you want to ground, if you have a particular signal characteristic that you desire, if you have a particular envelope that you want out of a box, then it is in that document that you tell him what he has to do, or what he should do, or come up with a compromise with him and then publish this agreement. However, the specifications, the formal limits as such, are not used that much. They are used in all the documentation; however, when talking to a designer, very rarely are the specification limits ever discussed.

Discussion (contd)

Hector M. Smith: One of the problems in EMC is that, sometimes, the design is being made for one stage and some other company is doing the design for other stages of the same vehicle. Sometimes you have interfering equipment in one vehicle and susceptible equipment in another vehicle. Now I would like to ask Mr. Walter if there is some way to improve the interface between different companies designing the same vehicle, possibly by putting EMC groups in all different companies on the distribution list for all these requirements for the one stage, or perhaps through informal meetings, or some other method.

Thomas G. Walter: We have a classic example of interface problems on Program 949. The Air Force has designated two associate contractors rather than a prime contractor and a subcontractor. Contractually, they are of equal standing. The Air Force has given to one the title of Integration Contractor, which happens to be us. When you get into a situation like this, the only thing that you can do is to define that interface in the terms, characteristics, etc., that a designer would understand. Then, you can use the top-level EMC limits, if you want to call them that. Both companies meet the same set of limits, although you usually find a problem negotiating with them as to what that limit should be. In our particular case, in this program, it was rather a difficult process getting them finalized; however, we did finally agree on a set of limits that, in some cases, are more stringent than needed, because the equipment in our half of the vehicle is not that susceptible in that range; but the other contractor happened to have something in his portion of the contract that is susceptible. The statement of the requirement is that you must meet this at an interface, conducted-wise and RF-wise. This would mean for example that, if you had a very sensitive low-frequency RF receiver in one half of the vehicle, and a large generator in the other half of the vehicle, you would have to guarantee that, at that interface, conducted-wise, you would meet the conducted limits of the top specification and that, radiated-wise at his input terminals you would meet the RF requirements. Therefore, this means that you would have some analytical problem that may need resolving. If you have previously completed all the calculations and then come up with these new limits, this is not insurmountable because you already have the tools for making this calculation.

Larry R. Pangburn: As I see it from the vehicle-to-vehicle standpoint, it is the same type of problem, except that now you are talking about two vehicles. Whoever is responsible for the systems aspects of the compatibility of those two vehicles, would handle it as though he were to make a single compatible vehicle. It is just that you are at a different level. You are talking about two vehicles now rather than one vehicle. On the other hand, I do not quite understand how the final verification analysis accomplishes assurance of delivery of a compatible system.

Thomas G. Walter: If you look at the factors that went into making up that final analysis, they considered everything from the basic analysis to define the requirements, all the way through the final design stage, taking into account the final design modifications to the system before unit qualification. This final report will actually tell you that when we started we said that we were going to do something, and now we have shown you that it has been done; it is more of a summary. Therefore, you have actually given the customer a very good profile and definition of what your system will do in terms of the limits that you have negotiated with him. Now, the customer will also have to get the tools that you have used to develop these limits. You cannot just give him the numbers and tell him that these are the values that you are going to use. You have to show the customer how you obtained these values. With the tools that you used to develop limits, plus the final results showing where you started and where you ended up, then any equipment in that vehicle can very easily be used on another program. You now have a very good definition of what that equipment will do and will not do. You have a model set up for calculating what this equipment would do in another environment. Therefore, all you have to do is plug in some numbers and you would find how it would react in a different environment.

David H. Swenson: The transfer function you talked about seems to be a fairly important part of the analysis. I want to know the methods you used to get this transfer function and its accuracy.

Thomas G. Walter: The transfer functions themselves are in terms of magnetic and capacitive couplings between wires, either shielded or unshielded coupling, unshielded to shielded coupling, or shielded to shielded coupling, depending on what case you want to consider. The transfer functions were developed in a Company-funded independent research program set up to develop a computer program to calculate this. Another group was funded to verify that they could measure the same data that were calculated. These were two independent operations. They have obtained correlation between the computed and the test results that is better than 6 dB. We feel that this is extremely good and includes the range from dc to 100 MHz. This is the heart of the whole operation.

Robert W. Ellison: I understood you to say that you defined your wiring and actually built it from tab runs that defined the beginning and end of the wire. It seems rather questionable whether there is any sound technical basis for assuming that all wires that are shielded to unshielded couplings, independent of the routing, whether they are the same bundles or not, would have the same coupling. Apparently there is much more elaborateness in your program than is defined to the manufacturing people who build the wiring.

Thomas G. Walter: You are right; there is. The WIDE system tabulates the end-to-end cabling – type of cable, type of termination, type of connector, etc. The actual routing of the cable is determined from a mockup or model of the system. All that the tab run can tell you is the wire length, for example. It will tell you which groups of wires are to be laced together, and which groups are not to be laced together. But how they are laid on the actual platform of the vehicle is determined by the model. You have a mechanical as well as an electrical problem of finding space for the wires. It is much more elaborate than just tabulation; there is a lot more to it than that.

Frederick C. Smith: Has your analysis of transfer functions extended to the transient case?

Thomas G. Walter: The way that the transfer functions were developed was not to consider either CW or broadband, or anything like it, but to consider a straight voltage (so many volts per hertz type of coupling), so that, if you go back to the standard Fourier or Laplace technique, you can take a transient and break it down into so many volts per hertz components and relate how much it is going to couple. For example, if you take a square pulse and feed it through this transfer function, what you get on the other line does not look anything like a square pulse. In fact, you generally cannot very easily define what the waveform would be that was coupled over. You can approximate it, or bound it, by saying that, if you had a pulse of a certain characteristic, it would give a pulse of one characteristic and a different pulse would result in a pulse of another characteristic. You have now defined a range for the designer so that he knows the kind of a noise envelope and the volts per hertz that he will obtain.

PRECEDING PAGE BLANK NOT FILMED.

N69-25430

Electromagnetic Compatibility Verification for the *Centaur* and *Surveyor* Space Vehicles

J. P. Quitter and J. R. Reiss
NASA Lewis Research Center
Cleveland, Ohio

I. Introduction

This paper describes a program of planning, testing, and corrective action to ensure electromagnetic compatibility between the space launch vehicle and payload of a major NASA project. The space booster involved was the *Atlas/Centaur* first- and second-stage combination, and the payload was the *Surveyor* spacecraft. The approach employed was to consider the total assembly as a collection of systems, subject to internal interfacing problems as well as externally generated problems arising from the launch complex. The interface of particular concern was that between *Centaur* and *Surveyor*, and ground-support equipment. *Atlas/Centaur*/ground-support equipment compatibility had already been demonstrated in the launch vehicle research and development phase of the program.

Test planning and execution included five major steps, with sufficient intervening time to allow for corrective action, if necessary, before the next step. The goal was to arrive at a launch configuration for which no electromagnetic compatibility problems were expected, so that the last test would confirm overall success rather than provide information for diagnosis and further corrective action. The test program was planned to extend from May 1965 through March 1966. Favorable results generated high confidence in actual *Atlas/Centaur/Surveyor*/ground-support equipment EMC. The first launch, on May 30, 1966, was successful, as were the remaining six in the program.

Since this paper will be limited in distribution, it is a condensed version of one now in final preparation. More detailed test results will be found in the longer paper, to be available from the authors shortly.

The purpose of this investigation was to examine conducted and induced electromagnetic interference at the electrical interface between the *Surveyor* spacecraft and the *Atlas/Centaur* booster. The *Atlas/Centaur* is classified as a medium-size launch vehicle. A test plan was devised, beginning with the Combined System Test Facility at San Diego, and continuing on to the launch complex at Cape Kennedy. A technical working group was set up, consisting of representatives from the NASA *Centaur* Project Management staff, the respective contractors – General Dynamics Convair, Hughes Aircraft Company, and Kennedy Space Center launch personnel.

II. Test Plan

The following series of major system tests were included in the EMC verification program:

(1) *Atlas/Centaur* Number 7 and Spacecraft Prototype T-21 at the Composite System Test Facility in San Diego (May 1965).

(2) *Centaur* Simulator and Spacecraft Prototype T-21 and associated ground-support equipment (GSE) at Launch Complex 36A, Cape Kennedy (July 1965).

(3) *Atlas/Centaur* Number 7, Spacecraft Simulator and Launch Complex GSE in major system test (Joint Flight Acceptance Test) (October 1965).

(4) *Atlas/Centaur* Number 7, Spacecraft Simulator and Launch Complex GSE in major system test (Simulated Tanking) (November 1965).

(5) *Atlas/Centaur* Number 10, Spacecraft Number 1, associated GSE at the Composite System Test Facility in San Diego (March 1966).

III. Test Environments

The Combined Systems Test Stand (CSTS) facility at San Diego was designed to simulate electrically, as nearly as economically feasible, the actual launch complex at Cape Kennedy. The CST marks the first time *Surveyor* is mated to its booster. Although *Atlas* and *Centaur* are not physically mated (Fig. 1), the interconnecting electrical wires are made as short as possible.

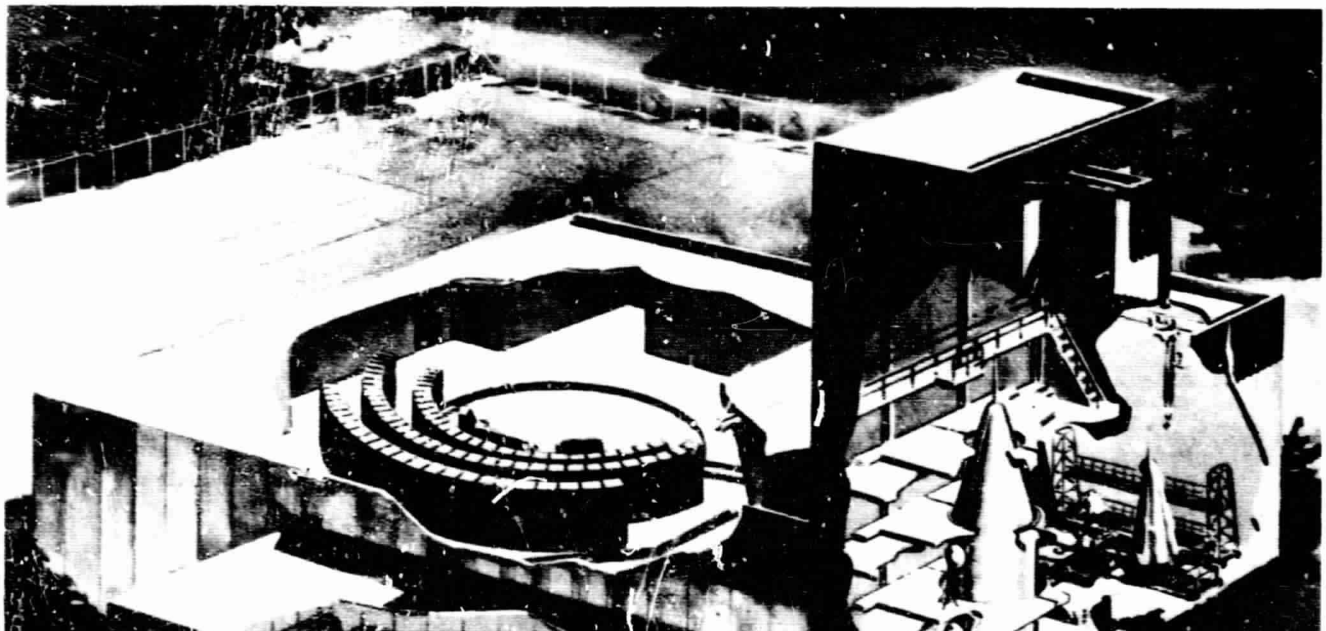

Fig. 1. Combined systems test stand

Long runs of wire are included to simulate the cableway from the umbilical tower to the blockhouse at the launch site. All of the control and instrumentation equipment located in the actual blockhouse are duplicated at CSTS. All relays and solenoids found at the actual launch complex are also duplicated at CSTS, even though propellants are not tanked at CSTS. Simulated tanking, however, does reproduce the electrical transients found in the actual operation. Although the CSTS facility was not designed specifically as an EMI test bed, it has proven very valuable for this purpose. It showed, for example in Test 1, that the levels originally proposed by spacecraft engineers (Table 1) were not realistic, and that further evaluation and verification would be required. Tests 2, 3, 4, and 5 followed (see Section II).

At Cape Kennedy launch complex 36 (Figs. 2 and 3), EMI problems were anticipated because of the mutual coupling in long cable runs (800 ft to site A and 1500 ft to site B), and because of the many solenoid valves (160) associated with propellant tanking. Inductive transients from these solenoids were suppressed by means of parallel diodes. In the blockhouse itself (Fig. 4), there are some 1200 relays. Most of these are also diode-suppressed. A classic example of transients arising from interrupting inductive circuits such as relays is shown in Fig. 5, *before* suppression. Although this example rises to 70 V, peaks as high as 800 V have been registered, *before* suppression. This particular transient was derived from a latching relay used in the spacecraft electric simulator. The presence of this transient illustrates the importance of suppressing the test equipment as well as airborne and GSE sources.

IV. Spacecraft and Booster Configuration

The *Surveyor* spacecraft (Fig. 6) is well known throughout the world. For the purpose of this paper, it is noteworthy that weight considerations limit the amount of shielding and filtering used on the spacecraft. For this reason, spacecraft circuits are generally more susceptible to EMI than circuits in which weight is not a problem. Further, since susceptibility levels were not contractually specified by JPL, actual levels were not accurately known or defined. The levels proposed in Table 1 were more in the nature of engineering estimates than actual hard and fast requirements.

The spacecraft is mounted within the *Centaur* nose fairing, as shown in Fig. 7. The proximity of *Centaur* electric and electronic equipment on the forward shelf is clearly evident. Figure 8 shows the *Centaur/Surveyor* separation plane and the staging disconnect. This point is not accessible during ground tests because a thermal barrier separates the spacecraft from the *Centaur* thermal environment. For this reason, the instrumentation used in these tests was connected at the so-called field joint connectors, located within 2 ft of the separation disconnect. The field joint connectors and their relationship to the *Centaur* forward equipment shelf is shown in Fig. 9. Details of the electrical circuits which pass through these connectors are shown in Fig. 10. The electrical interface between *Centaur* and *Surveyor* was divided into three categories:

(1) *Centaur* programmer commands to the spacecraft.

(2) Spacecraft inputs to *Centaur* telemetry.

(3) Control, monitoring, and power circuits between the blockhouse and the spacecraft.

Table 1. Proposed maximum allowable conducted EMI from *Atlas/Centaur*, GSE environment to *Surveyor*

Signal	Source	Proposed EMI levels
Accelerometer output signal	*Surveyor* accelerometer amplifier	20-mV peak
A/D converter output signal	*Surveyor* central signal processor	200-mV peak
Centaur commands High-power transmitter ON Extend landing gear Extend omni-antennas Pre-separation arming	*Centaur* programmer	500-mV peak
GSE power External battery charge External OCR input	GSE ground-power supply	100-mV peak
Helium dump	GSE helium dump pulse generator	250-mV peak
Main power switch ON/OFF	GSE safety console	2500-mV peak
Retro igniter safe and arm command	GSE safety console	250-mV peak
Gyro pre-heat power	GSE STEA	Not specified
Battery charge sensing	*Surveyor* battery	50-mV peak
Retro squib integrity	Safe and arm device igniter	2500-mV peak
Safe and arm sensing	Safe and arm device	5000-mV peak

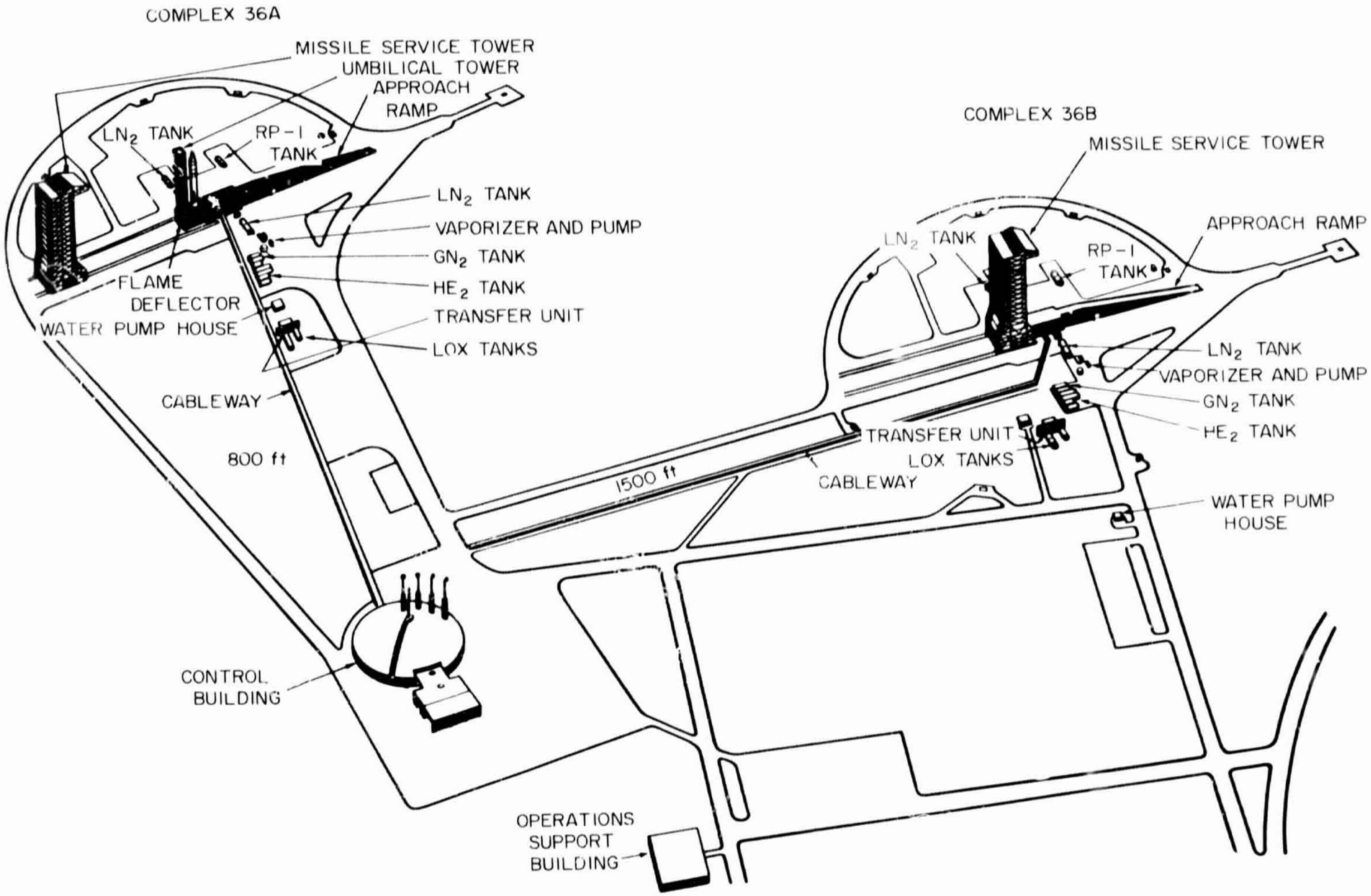

Fig. 2. *Centaur* launch complexes 36A and 36B

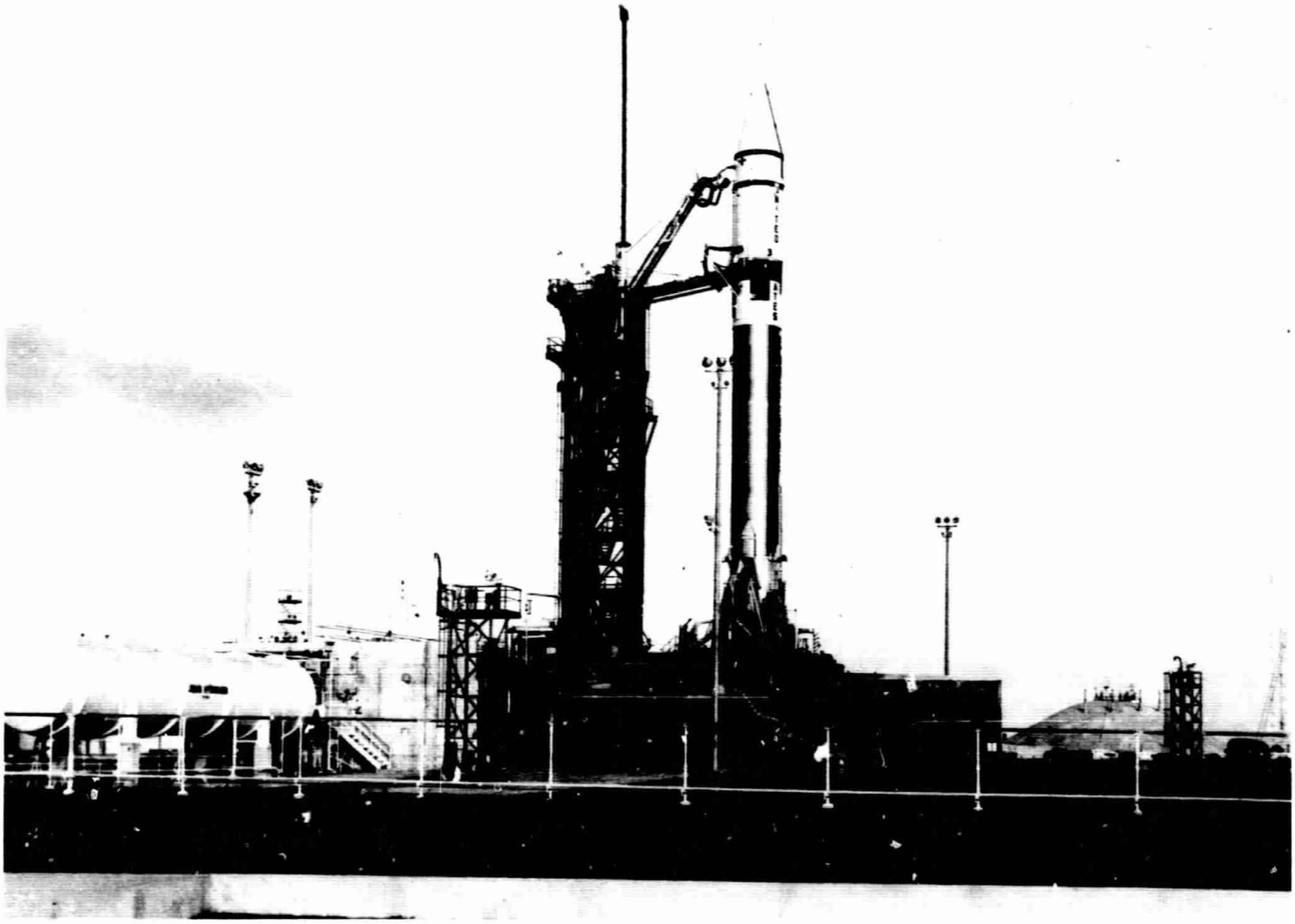

Fig. 3. Launch complex 36

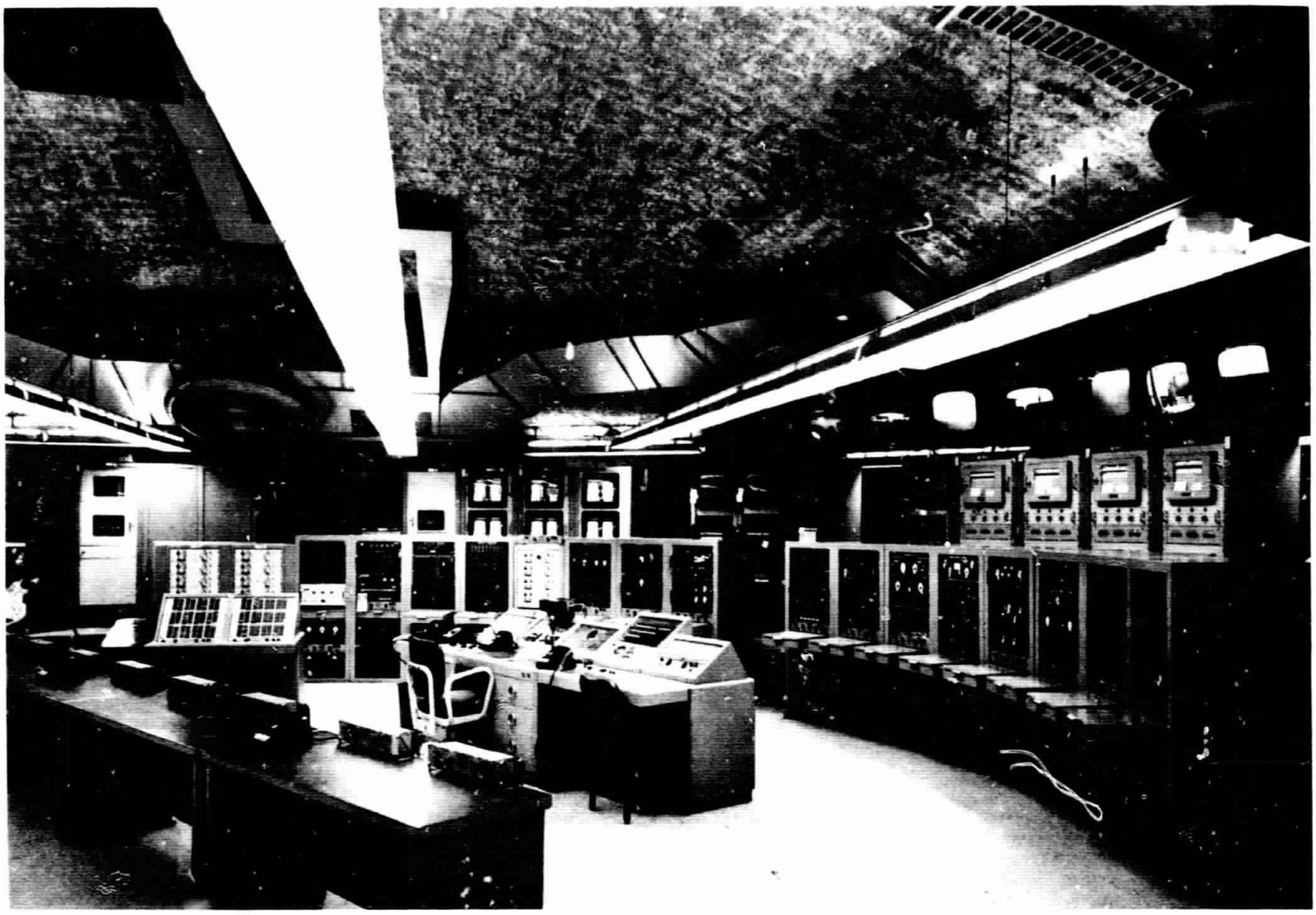

Fig. 4. Launch complex blockhouse

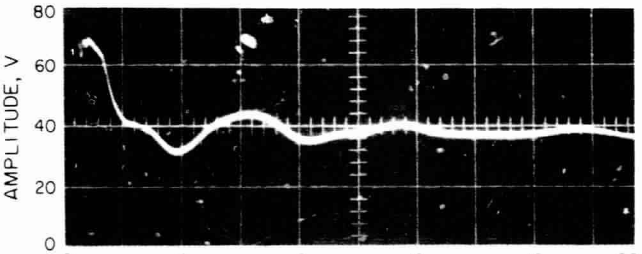

Fig. 5. Transient waveform at simulator's latching relay

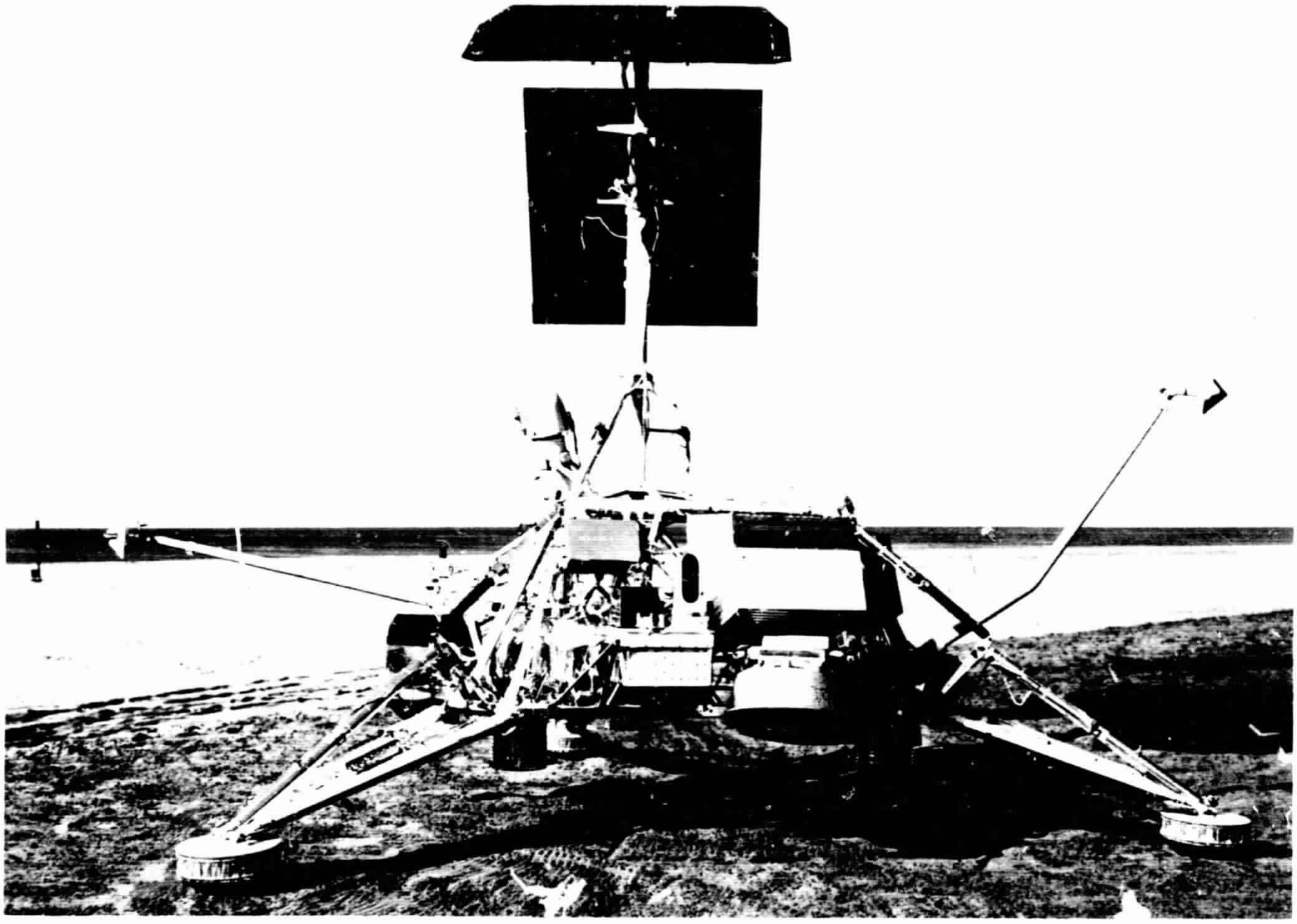

Fig. 6. *Surveyor spacecraft*

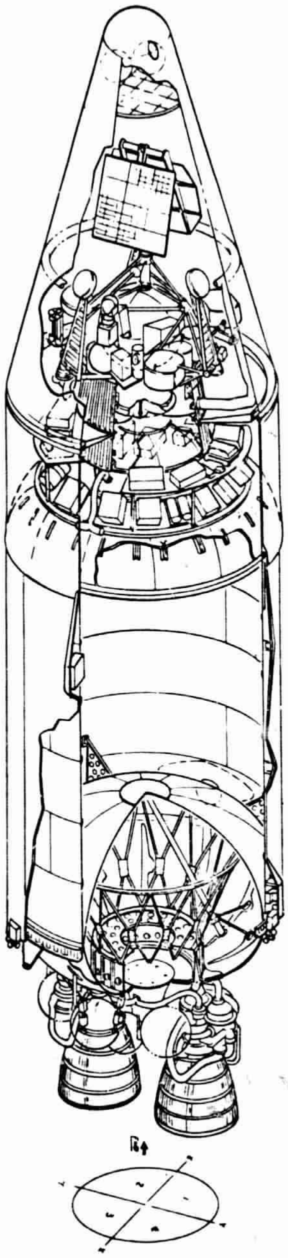

Fig. 7. *Surveyor and Centaur*

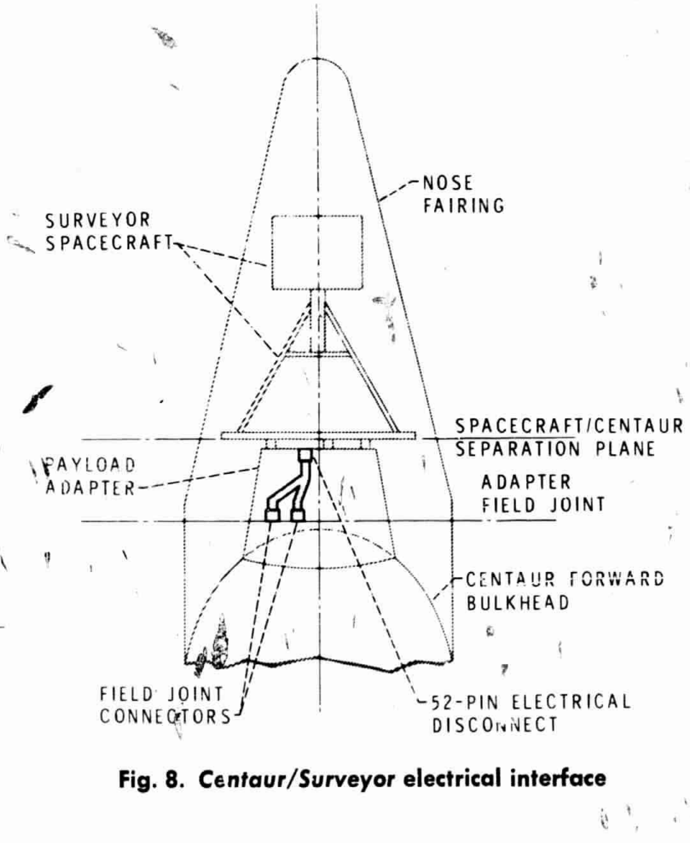

Fig. 8. *Centaur/Surveyor* electrical interface

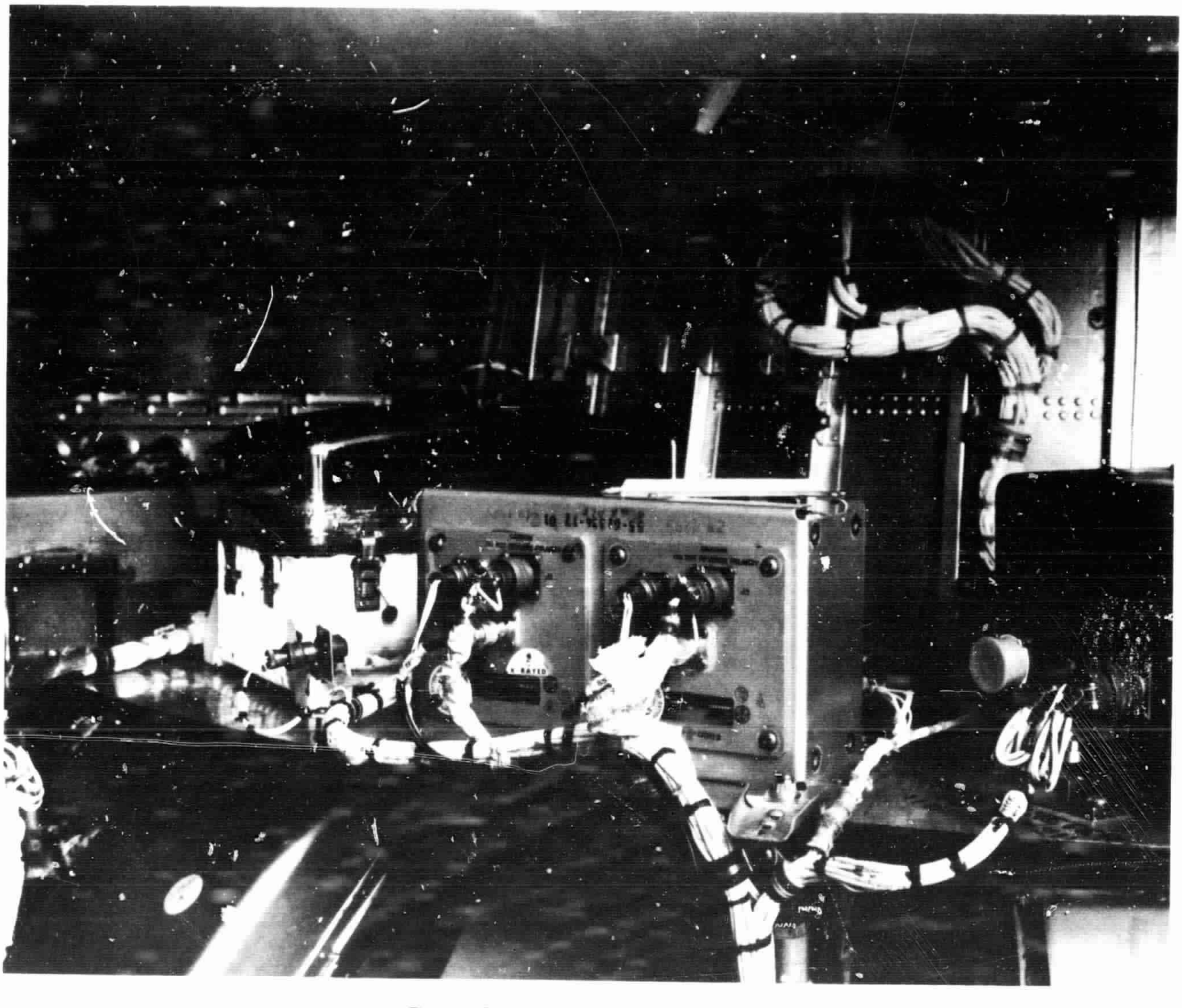

Fig. 9. Centaur/Surveyor field joint

(a)

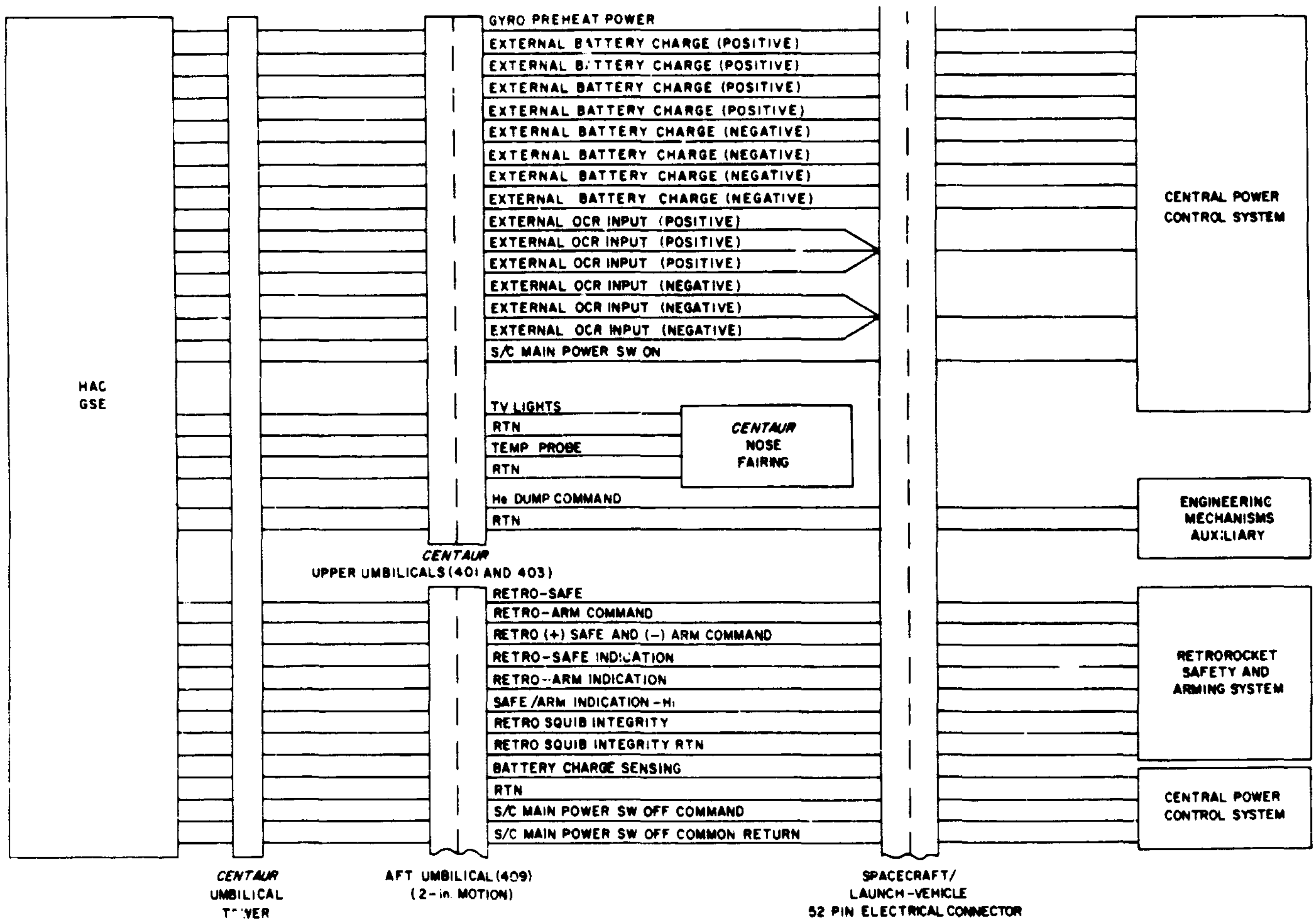

Fig. 10. *Centaur/Surveyor* electrical connector interface

(b)

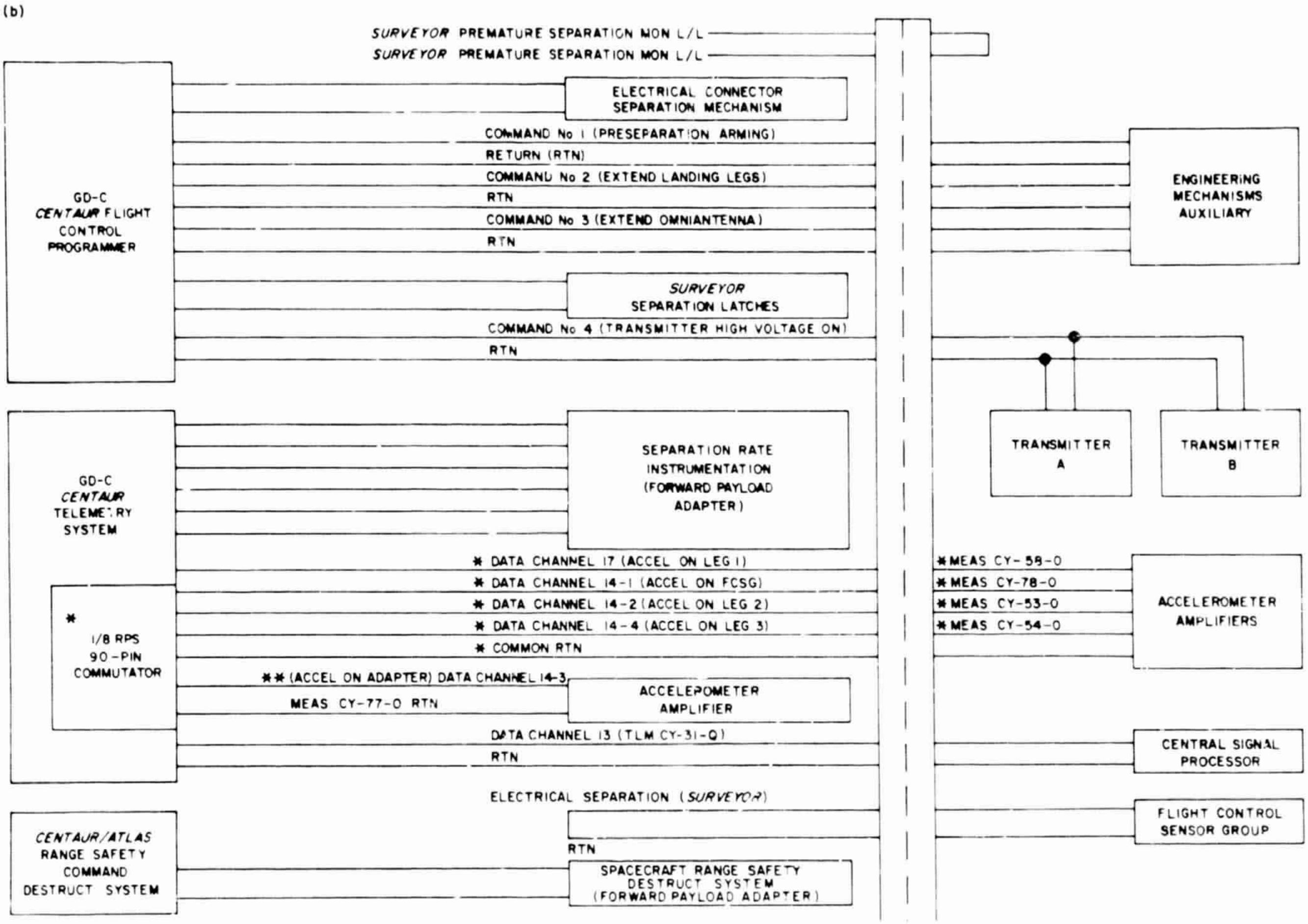

Fig. 10 (contd)

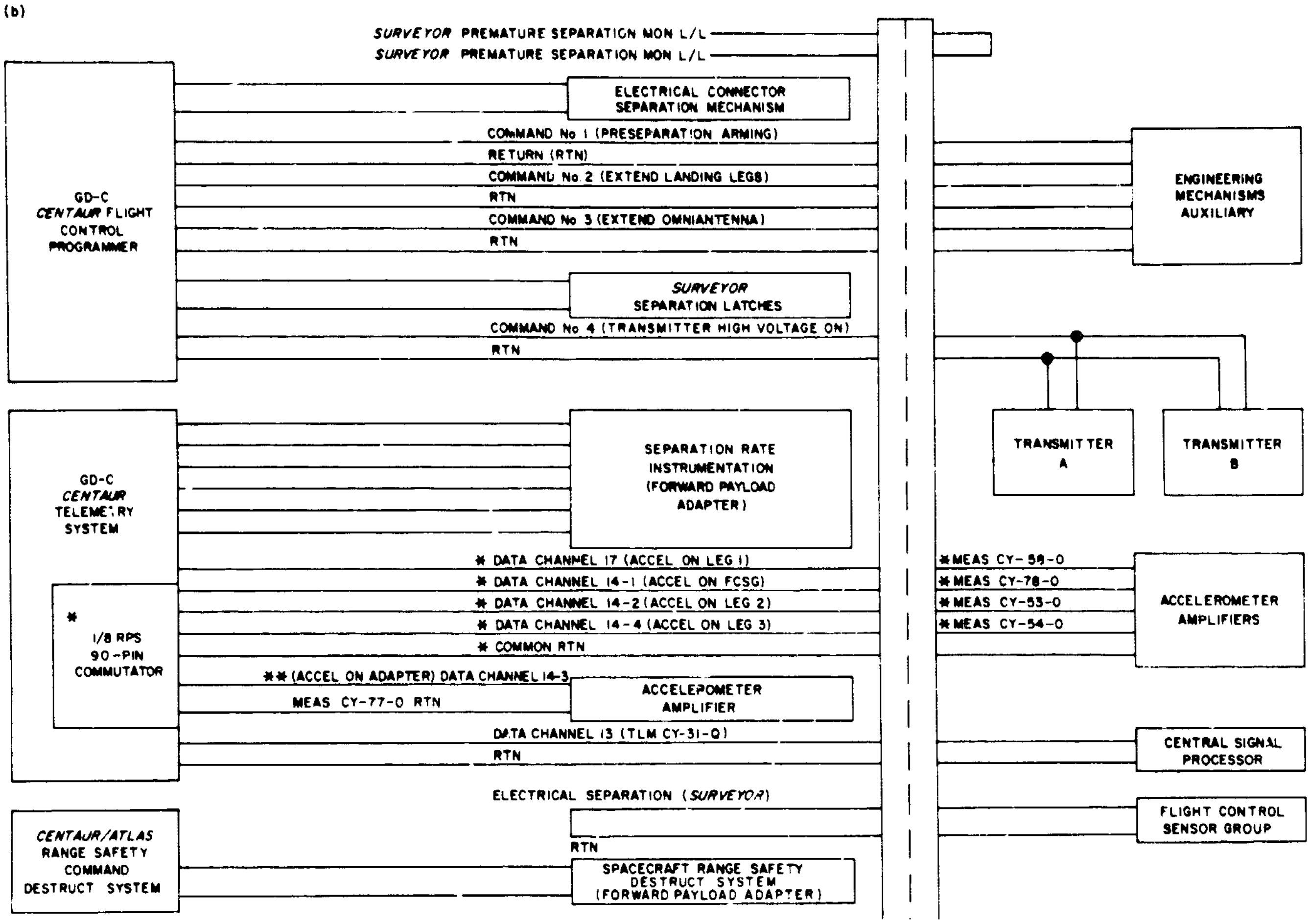
(b)
SURVEYOR PREMATURE SEPARATION MON L/L
SURVEYOR PREMATURE SEPARATION MON L/L
GD-C CENTAUR FLIGHT CONTROL PROGRAMMER
ELECTRICAL CONNECTOR SEPARATION MECHANISM
COMMAND No 1 (PRESEPARATION ARMING)
RETURN (RTN)
COMMAND No 2 (EXTEND LANDING LEGS)
RTN
COMMAND No 3 (EXTEND OMNIANTENNA)
RTN
ENGINEERING MECHANISMS AUXILIARY
SURVEYOR SEPARATION LATCHES
COMMAND No 4 (TRANSMITTER HIGH VOLTAGE ON)
RTN
TRANSMITTER A
TRANSMITTER B
GD-C CENTAUR TELEMETRY SYSTEM
SEPARATION RATE INSTRUMENTATION (FORWARD PAYLOAD ADAPTER)
* DATA CHANNEL 17 (ACCEL ON LEG 1)
* DATA CHANNEL 14-1 (ACCEL ON FCSG)
* DATA CHANNEL 14-2 (ACCEL ON LEG 2)
* DATA CHANNEL 14-4 (ACCEL ON LEG 3)
* COMMON RTN
*MEAS CY-58-0
*MEAS CY-78-0
*MEAS CY-53-0
*MEAS CY-54-0
ACCELEROMETER AMPLIFIERS
* 1/8 RPS 90-PIN COMMUTATOR
** (ACCEL ON ADAPTER) DATA CHANNEL 14-3
MEAS CY-77-0 RTN
ACCELEROMETER AMPLIFIER
DATA CHANNEL 13 (TLM CY-31-0)
RTN
CENTRAL SIGNAL PROCESSOR
ELECTRICAL SEPARATION (SURVEYOR)
RTN
FLIGHT CONTROL SENSOR GROUP
CENTAUR/ATLAS RANGE SAFETY COMMAND DESTRUCT SYSTEM
SPACECRAFT RANGE SAFETY DESTRUCT SYSTEM (FORWARD PAYLOAD ADAPTER)

Fig. 10 (contd)

On the *Centaur* side of the interface, there are numerous sources for electrical interference, especially for inductive transients. In the propulsion electrical system (Fig. 11), for example, solenoids are involved with the two engines and with the boost pumps. Relays are used in connection with pyrotechnic devices. In the Flight Control System (Fig. 12), many solenoids are used in connection with attitude control engines. Electrical transients from all of these devices must be suppressed at the source.

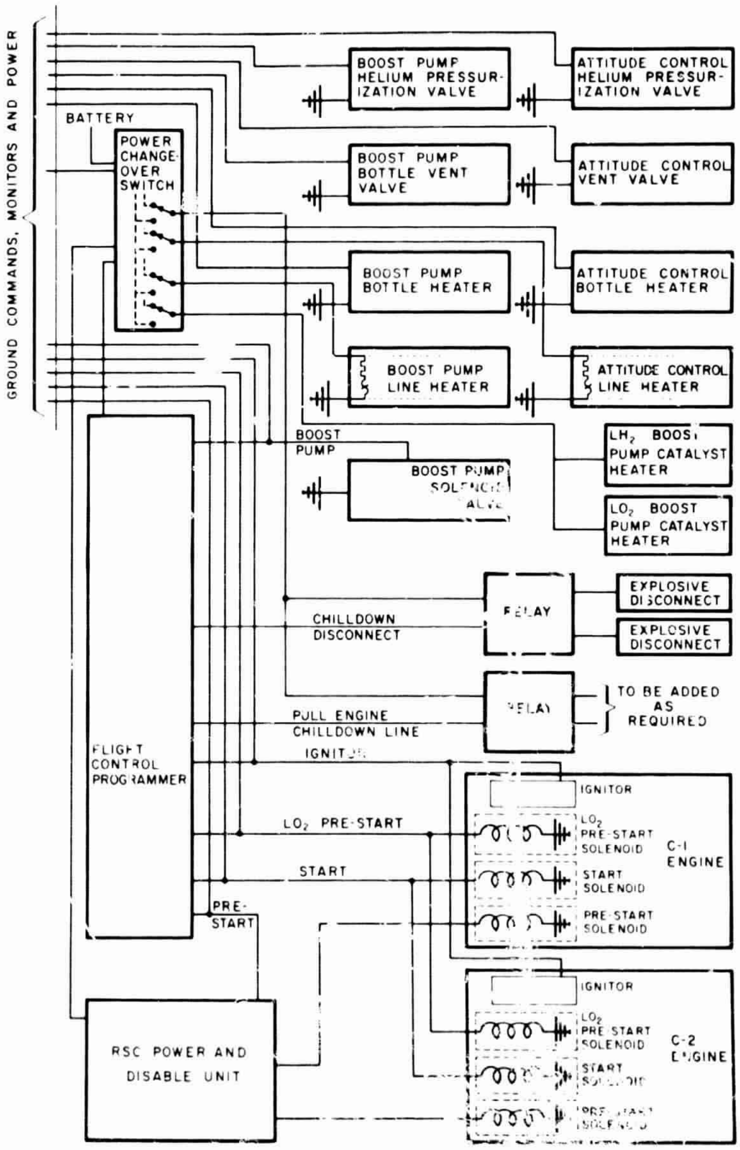

Fig. 11. Propulsion electrical system

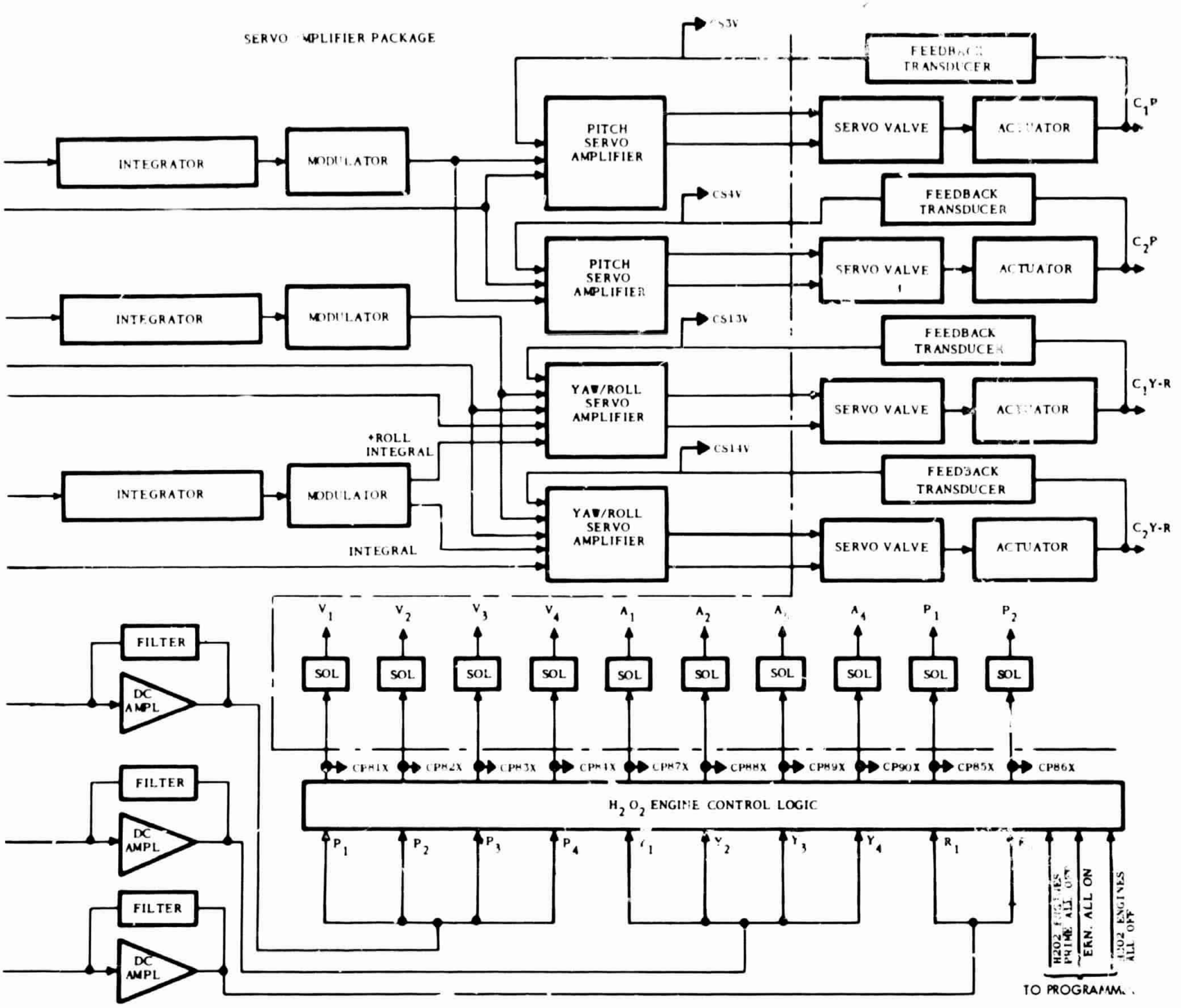

Fig. 12. Flight control system

V. Test Instrumentation

The technique employed for these tests was to use a breakout or sandwich box at the field joint connector (Fig. 13). An absolute minimum of additional wire was introduced into the airborne circuitry, and suitable shielding and grounding techniques were employed so that the instrumentation would not affect normal circuit operation, nor introduce foreign disturbances. Connected to the instrumentation box were a magnetic tape recorder, a recording oscillograph, cathode ray oscilloscopes, and transient detectors. The tape recorder was limited to a 20-kHz response and the oscillograph to 5 kHz. Signal components of higher frequency were noted by means of the oscilloscope and the transient detectors. The latter were unique devices designed and built by Convair, and will be described later. All equipment was interconnected with a common timing signal, and all test personnel were in constant voice communication. In this way, attention could be directed to imminent test events, or certain tests could be repeated at the discretion of the test conductor or of any operator. The practice of repeating significant events, or of examining the magnetic tape with the oscilloscope, made it possible to use single-exposure cameras at the oscilloscope instead of continuous film recordings.

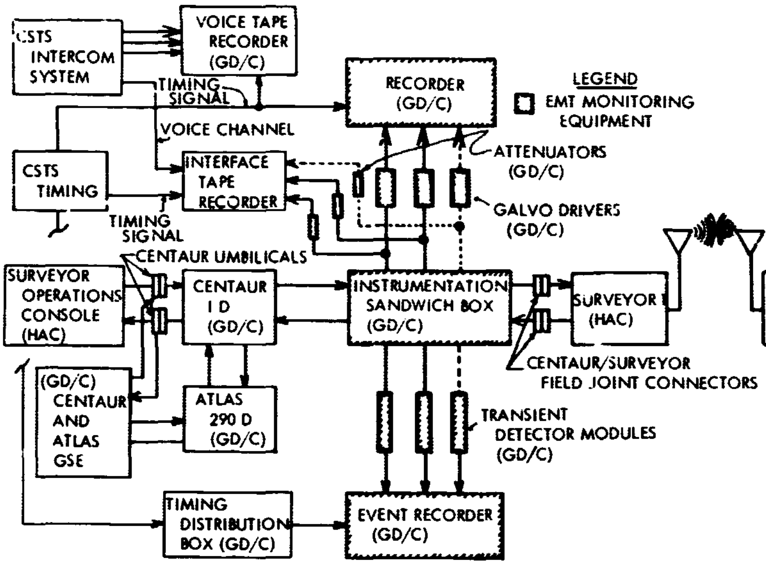

Fig. 13. Block diagram of *Centaur/Surveyor* interface EMI monitoring equipment for CSTS test (AC-10)

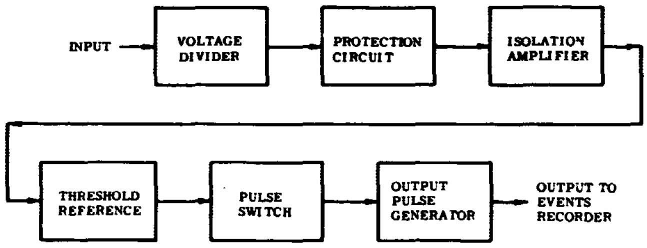

Fig. 14. Block diagram of GD/C transient detector module

The transient detectors (Fig. 14) employed "single-shot" silicon-controlled rectifiers (SCR) as pulse switches. Triggering level of the SCRs could be accurately calibrated and reproduced. Response was obtained to pulses ranging from 0.5 μs to 1 ms, in amplitude levels of 0.2 to 10 V, and 10 to 100 V. The instrument can be connected to respond to either positive or negative polarity. When the SCR fires, it actuates an "operations" or "events" recorder, which provides time correlation. The specific nature of the transient can be examined later by repeating the event occurring at that discrete time.

Figure 15 shows the setup for test 1. This test, which was hastily improvised, employed instrumentation leads longer than desirable. Subsequent tests reduced the lead length, as previously mentioned. In this test only, the T-21 spacecraft prototype was located on the upper level, while the *Centaur* booster was located under the temporary floorboards. This first test served to alert all concerned to the apparent incompatibility then existing (May 1965) between *Centaur* and *Surveyor*. This test also provided experience for improving instrumentation for subsequent tests.

As part of the normal *Centaur* test procedure followed at Cape Kennedy launch complex 36, dc currents of all electrical subsystems are recorded, with timing markers (Fig. 16). While the resolution of this record is not sufficient to show fast transients, it is sufficient to identify and correlate switching times with EMI events. This figure is of particular interest because it shows a tremendous inrush of current at *Atlas* inverter start. In this case, it reaches a peak of 590 A.

VI. Test Results

A. Test 1

The *Atlas/Centaur* No. 7 and Spacecraft Prototype T-21 of May 22, 1965 showed a number of apparent incompatibilities between booster and spacecraft. Of twenty lines monitored both on external power and internal power, three lines showed continuous noise levels greater than those proposed by Hughes Aircraft Co./JPL. The transient detectors were also triggered at intervals throughout the test. Most of these transients were coincident with activation of switching functions of the vehicle during simulated flight. The noisy lines were as shown in Table 2.

K

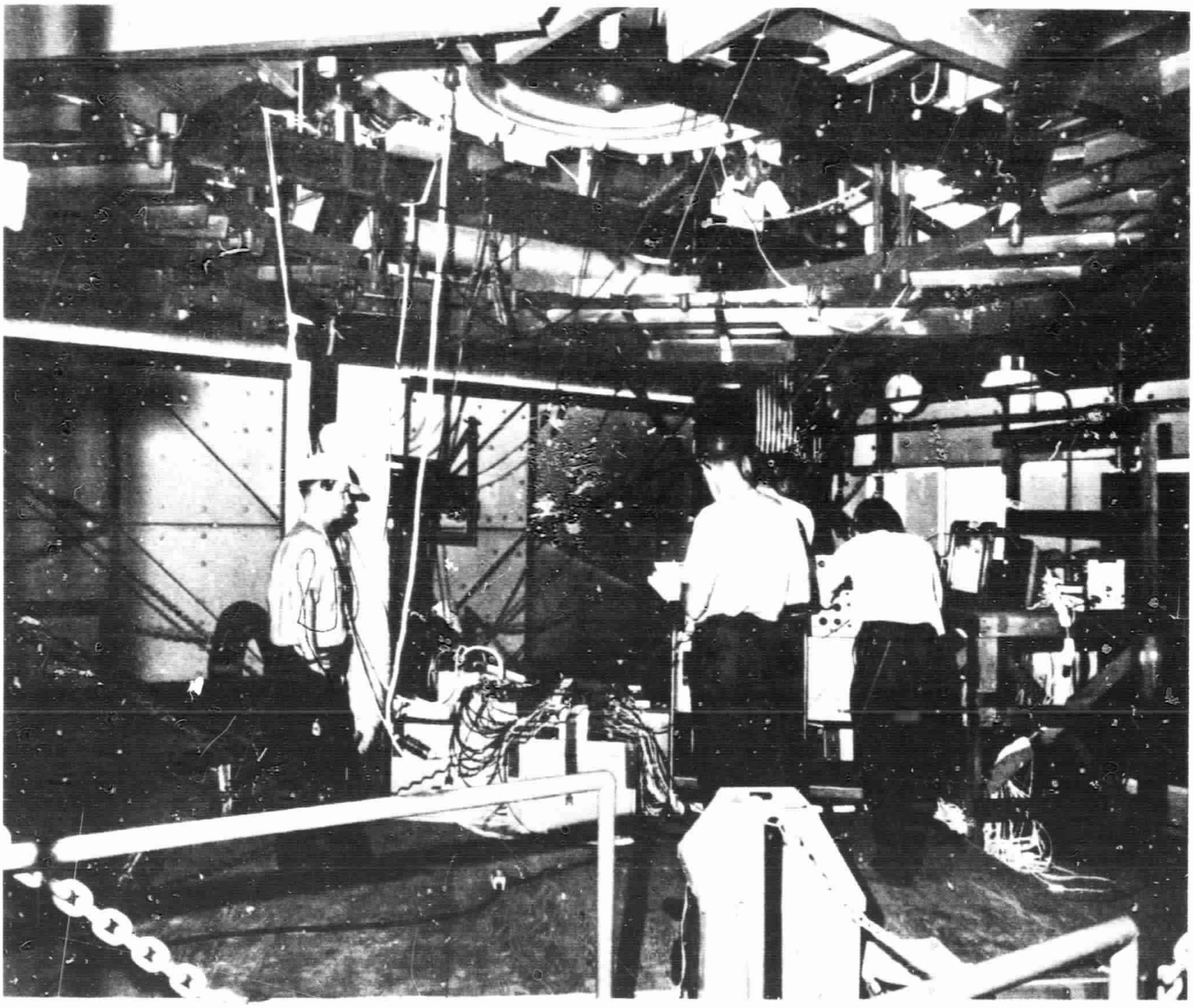

Fig. 15. Test setup (front view)

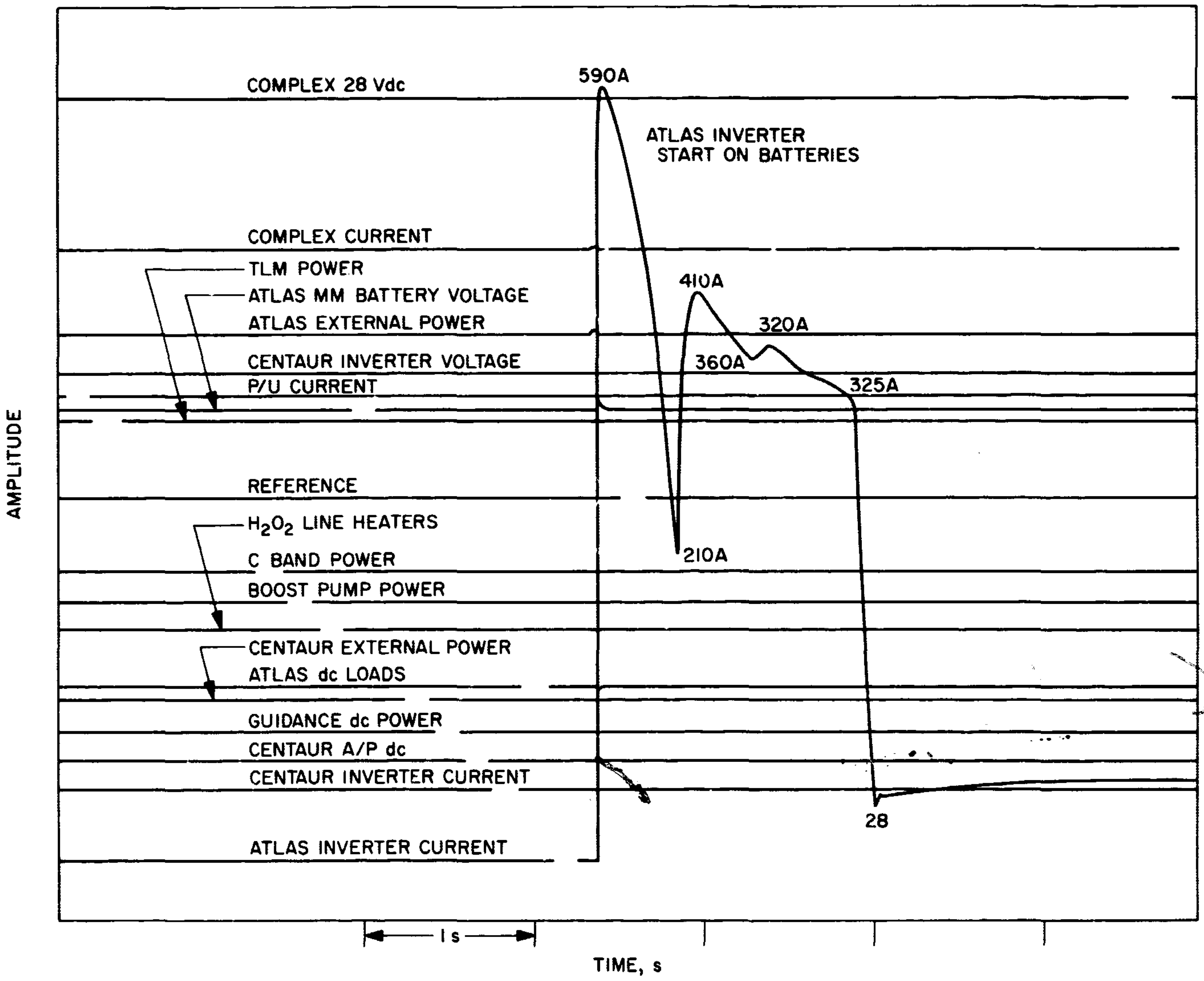

Fig. 16. Subsystem dc current recordings

Table 2. Noise levels on selected noisy booster/spacecraft interface circuits

Circuit	Proposed level, mV	Actual levels, mV[a]	
		External	Internal
Accelerometer output	20	100	125
GSE power	250	280	875
Battery charge sensing	50	950	165

[a] Zero to peak values.

No major problems were encountered during the test, in spite of the fact that the proposed maximum susceptibility levels were exceeded several times. Spacecraft commands were not falsely triggered, nor were damaging levels of conducted interference observed. As a result of this observation, it was agreed by spacecraft engineers to re-examine their proposed tolerance levels. It was further agreed by the working group to continue EMC testing at the Cape Kennedy launch complex.

B. Test 2

In this test, the same T-21 spacecraft prototype used in test 1 was employed. Since the *Centaur* stage was not available, commands originating in its programmer were simulated by switches. The test was run on July 14, 1965 at Cape Kennedy launch complex 36A.

The only significant noise levels occurred on the external optimum charge regulator (OCR) input line. It was found that ±40-V transients were generated when the solar panel deployment actuator was switched ON and OFF. In addition, 7 V (peak-to-peak) steady-state noise was found at 1.3 Hz, and 19 V (peak-to-peak) steady-state noise was found at 6.2 Hz.

Prior to this test, spacecraft engineers believed that transients in excess of ±40 V could cause circuit damage resulting in possible mission failure, and that steady-state noise could cause errors in checkout of OCR during pre-launch operations. Subsequently, spacecraft engineers affirmed that the noise levels seen during this test were not large enough to cause either a malfunction or serious degradation of system performance. Re-examination showed that circuit damage would not occur until the voltage level reached 80. The 19-V 6.2-Hz signal was determined to be a natural condition associated with normal OCR circuit operation.

C. Test 3

When the actual *Atlas/Centaur* vehicle, AC-7, became available, another test series was begun with a spacecraft passive simulator. This test was conducted at launch complex 36A on October 20, 1965 in the flight acceptance combined test mode of operation. Tanking was *not* simulated, although umbilicals were ejected at, or near, T − 0, which is the simulated liftoff time. Flight programmers commanded all normal flight events through simulated spacecraft separation.

The only transients noted were the expected programmed commands of *Extend Legs, Transmitter High Power On,* and *Pre-Separation Arming.* Steady-state noise on all lines, except external OCR input, was well below the steady-state compatibility levels agreed upon. An 8-V peak-to-peak noise was observed on the external OCR input line from the start of the countdown test until the spacecraft console main power ON switch was actuated, at which time the noise disappeared. The noise was attributed to inductive coupling to the line, which was essentially unterminated (open) until power was switched on. After power turn-on the noise decreased to 0.2 V (peak-to-peak).

D. Test 4

This test was essentially the same as test 3, except that propellant loading was simulated (solenoid valves were actuated). The configuration remained the same as for test 3, although individual system tests were run independently, rather than in a formal pre-launch countdown procedure. The newly established steady-state levels were not exceeded. No undesirable transients were detected — except for one transient which was generated within the *Surveyor* simulator by the coil of a latching relay. This relay is used to simulate a motor-driven switch used in the actual spacecraft. When the +36-V command was applied to the relay, a classic damped wave resulted, peaking at 68 V (Fig. 5). This was caused by the self-induced voltage $L \frac{di}{dt}$, and was never sufficiently large to affect adjacent circuits adversely.

E. Test 5

Finally, as the last in this series of tests, the actual lunar mission configuration became available. On March 5 and 7, 1966, a Combined Acceptance Test was performed on *Atlas/Centaur* 10 and *Surveyor I,* at the test facility in San Diego.

Three transients were noted on X − 1 day (March 5, 1966). These were the result of normal switching of the *Surveyor* solar panel simulator. Another transient resulted when the programmed command *Retro Arm On* was observed on the operations recorder.

On X − 0 day (March 7, 1966), expected transients were noted in response to *Surveyor* GSE commands *Solar Panel Simulator On/Off*, *Retro Arm On/Off* and *Centaur* programmer commands of *Pre-Separation Arming*, *Extend Legs*, and *Transmitter High Power On*. However, three transients that were not the result of programmed commands were also observed. Two of these transients occurred on the *Retro Arm On* line (−25 V transient threshold) and one occurred on the *Extend Omni-Antenna* line (+50 V transient threshold), while the *Centaur* programmer was in the safe mode.

Inspection of the oscillograph trace of the *Retro Arm On* command pulses showed a negative transient at the leading edge of each pulse at the exact time the −25-V detector monitoring *Retro Arm On* was triggered.

The +50-V transient on *Extend Omni Antenna* occurred during a time interval when *Surveyor* GSE power cables were being examined to determine whether they were securely mated. The *Centaur* vehicle was passive at this time and could not have generated such a transient.

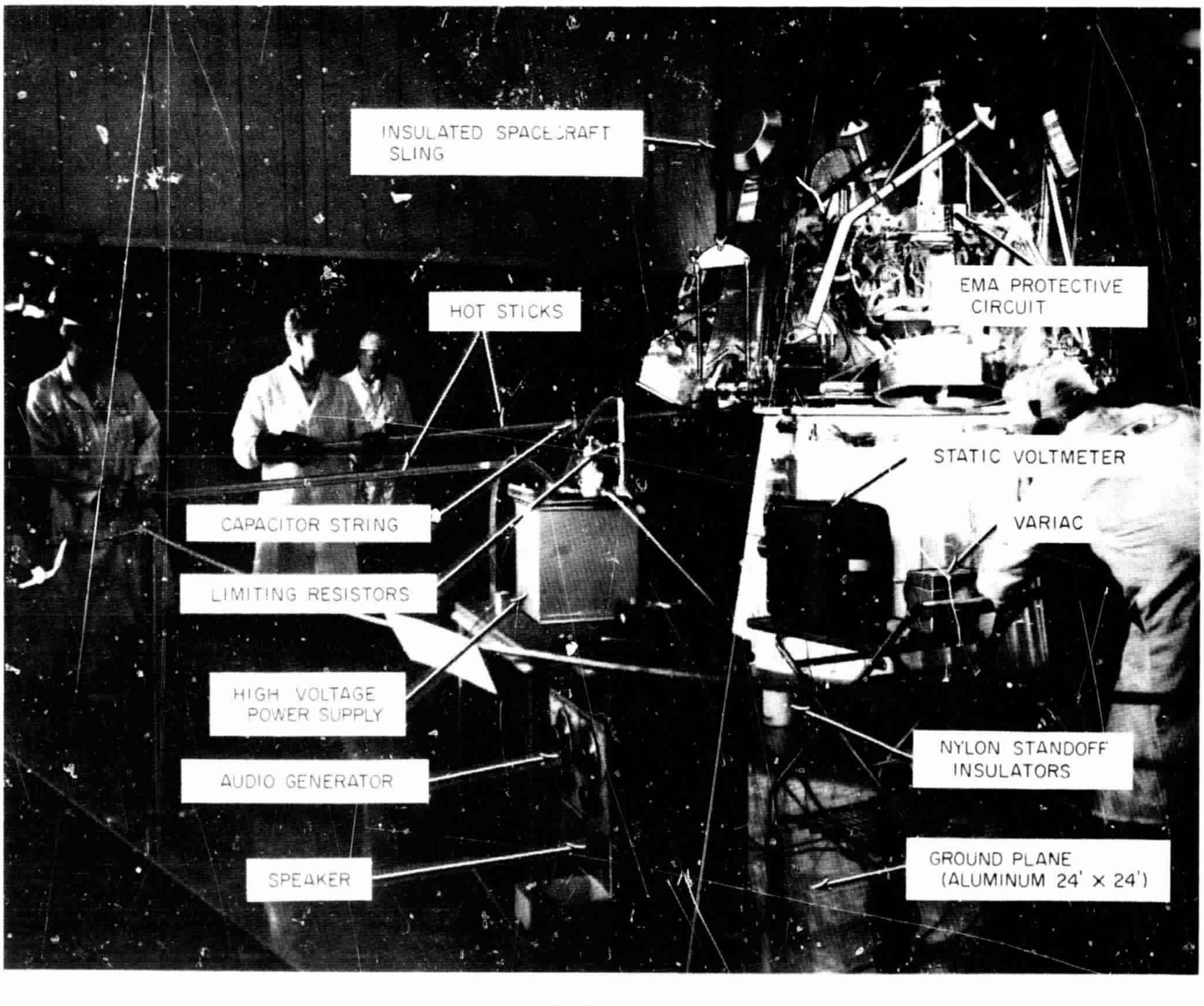

Fig. 17. Surveyor high-voltage discharge test

Random noise of 3.5 V peak was observed on the spacecraft accelerometer line on both days of the test. This noise was traced to a loose connection between the accelerometer transducer and its amplifier. All other steady-state noise levels were below the acceptable levels.

Concurrently with these tests, spacecraft engineers adopted the point of view that the levels given in Table 1 were neither realistic nor well defined. Simultaneously, they began a program of further desensitizing their circuits. Much credit goes to these engineers for this effort, for, in the end, they were so successful that high-voltage discharges could be made directly to the spacecraft (Fig. 17) without endangering any of their circuits. Mr. Sabaroff's paper (included in these proceedings under the title *Static Electricity Case Histories*) will expand upon these high-voltage tests.

Finally, as a result of these tests and also the spacecraft review and desensitizing program, a new set of EMI levels was proposed and agreed upon (Table 3).

Table 3. Maximum allowable conducted EMI from *Atlas/Centaur*, GSE environment to *Surveyor* — JPL Project Document 1 (Revision 3)

Signal	Signal amplitude[a]	Signal frequency range	Source	Source impedance	Load impedance[b]	*Surveyor* allowable steady-state/ transient EMI levels
Accelerometer output signal	±2.5 V centered about a bias of 2.5±0.1 Vdc	5–1000 Hz	*Surveyor* accelerometer amplifier	$Z_s = 200\ \Omega$	$Z_L = 250\text{–}450\ k\Omega$	Steady-state noise-fundamental components below 2 kHz shall not exceed 200 mV peak. No transients shall exceed $^{+100}_{-20}$ V peak
A/D converter output signal	Zero state = 0±0.3 V One state = 5±1.0 V	550 pulses/s	*Surveyor* central signal processor	$Z_s = 1\ k\Omega$	$Z_L = 250\text{–}450\ k\Omega$	Steady-state noise ±1.5 V peak. No transients shall exceed ±100 V peak
Centaur commands			*Centaur* programmer			
High-power transmitter ON	26.5±3.5 V	Single pulse (100±20 ms)		$Z_s < 1.0\ \Omega$	$Z_L = 418\ \Omega$	Transients <100 μs duration (at 90% amplitude) ±70 V peak. Transients >100 μs duration (at 90% amplitude) $^{+18}_{-70}$ V peak
Extend landing gear	26.5±3.5 V	Single pulse (100±20 ms)		$Z_s < 1.0\ \Omega$	$Z_L = 510\ \Omega^b$	Transients <100 μs duration (at 90% amplitude) $^{+100}_{-50}$ V peak. Transients >100 μs duration (at 90% amplitude) ±10 V peak
Extend omni-antennas	26.5±3.5 V	Single pulse (100±20 ms)		$Z_s < 1.0\ \Omega$	$Z_L = 510\ \Omega^b$	No transient shall exceed $^{+100}_{-50}$ V peak
Pre-separation arming	26.5±3.5 V	Single pulse (31±0.5 s)		$Z_s < 1.0\ \Omega$	$Z_L = 510\ \Omega^b$	Transients <100 μs duration (at 90% amplitude) $^{+60}_{-100}$ V peak. Transients >100 μs duration (at 90% amplitude) ±10 V peak
GSE power			GSE ground power supply			
External battery charge	28 V max	dc		$Z_s < 1.0\ \Omega$	$Z_L < 1.0\ \Omega$	Steady-state noise 2.8 V peak below 1.0 kHz and 4.2 V peak above 1.0 kHz. No transients shall exceed ±80 V peak

[a] Levels listed are to be measured using instrumentation with a minimum bandwidth of 30 MHz.

[b] $Z_L = 250 \pm 50\ \Omega$ when Centaur commands *extend landing gear and pre-separation arming, or extend omni-antennas and pre-separation arming* are on simultaneously.

Table 3 (contd)

Signal	Signal amplitude[a]	Signal frequency range	Source	Source impedance	Load impedance[b]	Surveyor allowable steady-state/ transient EMI levels
External optimum charge regulator input	1.7 A, 50 V average dc (as constant current source)	dc		$Z_s = 300\ \Omega$	$Z_L = 30\ \Omega$	
Helium dump	40±5 V	30-ms pulse	GSE helium dump pulse generator	$Z_s = 39\ \text{k}\Omega$	$Z_L = 1\ \text{k}\Omega$ (unactivated) $Z_L = 450\ \Omega$ (activated)	Transients <100 μs duration (at 90% amplitude) $^{+60}_{-100}$ V peak. Transients >100 μs duration (at 90% amplitude) $^{+30}_{-100}$ V peak
Main power switch ON/OFF	28 V	dc	GSE safety console	$Z_s = 2.3\ \text{k}\Omega$	$Z_L = 3.8\ \Omega$	Steady-state noise 17.0 V peak. No transients shall exceed ±100 V peak
Retro igniter safe and arm command	28 V	dc	GSE safety console	$Z_s = \infty$	$Z_L = 28\ \Omega$ (closed contact side)	Steady-state noise 17.0 V peak. No transients shall exceed ±50 V peak at 50 μs (or equivalent constant energy)
Gyro pre-heat power	27 V	dc	GSE STEA	$Z_s = 1.0\ \text{k}\Omega$	$Z_L = 40\ \Omega$	No transients shall exceed ±80 V peak. Steady-state noise shall not exceed 8.5 V peak
Battery charge sensing	28 V max	dc	Surveyor battery	$Z_s < 1.0\ \Omega$	$Z_L = 300\ \text{k}\Omega$	Steady-state noise 2.8 V peak below 1.0 kHz. Steady-state noise 4.2 V peak above 1.0 kHz. No transients shall exceed ±80 V peak
Retro squib integrity	28 V	dc	Safe and arm device igniter	$Z_s = <1.0\ \Omega$ (squib fired) $Z_s = \infty$ (squib unfired)	$Z_L = 1\ \text{k}\Omega$	Steady-state noise 17.0 V peak. No transients shall exceed ±50 V peak at 50 μs (or equivalent constant energy)
Safe and arm sensing	28 V	dc	Safe and arm device	$Z_s = <1.0\ \Omega$ (safe) $Z_s = \infty$ (unsafe) $Z_s = <1.0\ \Omega$ (armed) $Z_s = \infty$ (unarmed)	$Z_L = <1.0\ \Omega$ (safe) $Z_L = \infty$ (unsafe) $Z_L = <1.0\ \Omega$ (armed) $Z_L = \infty$ (unarmed)	Steady-state noise 17.0 V peak. No transients shall exceed ±50 V peak at 50 μs (or equivalent constant energy)

This table not only distinguishes between steady-state and transient signals, but also identifies signal characteristics as well as source and load impedances. Table 3 was incorporated into the formal JPL Project Document No. 1 (Revision 3), which served as the official instrument of agreement between the *Surveyor* and *Centaur* projects. The final tests in this series verified electromagnetic compatibility between spacecraft and booster, based upon Table 3. Detailed test data may be found in the more formal report to be published by the authors.

VII. Conclusions

These tests established that both *Centaur* and *Surveyor* were designed in accordance with good EMC practice, and even though designed independently, were, in fact, compatible.

From these tests, it was learned that arbitrary test levels (Table 1) may not be realistic, and that practical EMC specifications (Table 3) are useful only if they can be verified by test.

All participants recognized that electromagnetic compatibility depends upon electromagnetic coordination. Such coordination and cooperation was obtained in this program.

It is important to allow enough time in major multisystem programs such as *Atlas/Centaur/Surveyor* for thorough electromagnetic compatibility testing and possible redesign and retesting.

For maximum confidence in test results, the degree of simulation should be minimized, and actual final configurations employed, wherever possible.

PRECEDING PAGE BLANK NOT FILMED.

N69-25431

Surveyor Spacecraft

Donald Wilbur
Hughes Aircraft Company
Fullerton, California

I. Introduction

Initially, I would like to discuss some of the background and philosophy of the EMI requirements developed for *Surveyor*. The spacecraft configuration and design will be briefly covered and one or two of the significant problems mentioned. The EMI test program that was conducted for *Surveyor* will also be discussed. The discussion will be conducted more or less from the viewpoint of the systems engineer.

The design of space vehicles and, particularly, a lunar probe presents a significant challenge from the standpoint of EMC, primarily from the viewpoint of the economic considerations that dictate how much weight goes into orbit and on target, and how much of that weight you can afford to allocate for seemingly useless functions such as EMI shielding, filtering, etc. Secondarily, in the case of *Surveyor*, the lunar environment posed a somewhat significant problem to EMC from the standpoint of the extreme temperature range that was encountered during the lunar night. Thermal control techniques that were utilized to ensure that the electronics would maintain the proper operating temperatures tended to defeat good EMC practices. As a result some unusual and, to an EMC engineer, frustrating trade-offs were encountered. However, in the long run, it seems that they were satisfactory.

II. Basic EMC Requirements

Now that everyone is fully indoctrinated in the futility of EMC specifications, I can tell you that *Surveyor* started out with the broad general philosophy, which the customer wisely tolerated, that the contractor's requirement was to provide a functional and compatible vehicle that would operate during all phases of the mission through test, launch, transit, and the lunar operations. Consequently, the contractor faced the entire burden of establishing a design and compatible specifications and requirements that would fulfill this job. There were a few minor requirements by the customer. One was that the system must demonstrate, before shipment to the launch pad, that it could withstand the field energy that it would see from the range radars and other RF equipment anticipated in that vicinity. This was to be demonstrated at the system level. Within this framework of requirements, a specification was generated which considered all the pertinent factors in the proposed system design. The transmitter frequencies, power levels involved, types of modulation, receiver bandwidths, and types of devices which might inadvertently become receivers were considered.

In considering these factors, it was discovered that the specifications which had been used up to that time, principally military specifications, were grossly over-restrictive in some areas. An example is the usual military specification requirement for audio signal susceptibility or immunity below 100 Hz. Techniques to meet this requirement, particularly as low as 30 Hz, added a considerable amount of weight to a vehicle. This was considered unnecessary and no attempt was made to meet this requirement. The specifications finally developed provided a cutoff at approximately 100 Hz, at which point there was some expected energy. Another type of requirement was considered superfluous for this program. There may be people in the audience who would gasp, but the transmitter spurious output, insofar as it did not affect useful power, and insofar as it did not conflict with any of the equipment onboard the spacecraft or expected to be in the vicinity of the spacecraft, was considered to be rather incidental. The levels tolerated were based more on what could be done in this package with a minimum amount of weight, rather than meeting requirements such as those which the FCC, and some of the military specifications imposed on transmitters. Another type of requirement that was more or less superfluous was the image response requirement. In the operating environment we did not anticipate any interference from that area, particularly since this was in the early 1960s, when there was very little in the way of telemetry signals in the 2-GHz band. It was also possible to live with considerably more relaxed broadband and CW radiation levels than were current in the military specifications at that time. Of course, at the command receiver frequency, with a sensitivity of −110 to −117 dBm, the requirements imposed were extremely severe. A requirement was imposed at the radar receiver frequencies as well as the command receiver frequencies to provide an adequate margin at those spot bands. All of these items represented a considerable weight saving and, from the standpoint of the mission, were justified. Space system design is changing somewhat and gravitating toward more stringent requirements in some areas because of more fully occupied telemetry bands and other problems of that type.

III. *Surveyor Thermal/EMI Problems*

Figure 1 shows one of the early prototype *Surveyor* spacecraft. It does not truly reflect the final configuration in that this vehicle has an extra survey TV camera which was never flown. The early design did consider it. The retro rocket is shown at the bottom center of the figure. It should be noted that the retro rocket fills up the center of the vehicle. The nozzle below contained the altitude marking radar which marked the 50- to 60-mi range as the vehicle approached the moon. When the retro was fired, the radar was blown out of the nozzle. The conspicuous use of aluminized film should particularly be noted. This was an extremely thin film of Mylar, and some cases Teflon, which was aluminized on one side and used for thermal control purposes. All of the exposed harness, many of the fuel tanks, and some of the other items were wrapped with this for thermal protection. There are two thermal compartments that contain the bulk of the electronics, except for the radars and flight control system. They contain the telecommunications, the power, the command decoding, and the signal processing systems. These compartments were required to maintain internal temperatures within a range that would protect the electronics inside. This was on the order of +125 or 130°F during the lunar days, to 0°F at night. The inside of the compartments are lined with many layers of the Mylar film shown on the retro rocket, for purposes of insulation.

One of the problems that was encountered on the spacecraft was caused by this thermal insulation. The film was extremely subject to developing high electrostatic potentials on its surface because of the friction from normal handling. As a result, it was easy to measure as high as 25,000 V at points on its surface, with no intentional effort at all to excite it. This resulted in some rather unusual problems during spacecraft development and testing, as a result of static discharges occurring from this film. Mr. Sabaroff will discuss this in a subsequent paper. He will give specific case histories of some of the problems that were involved.

The flight control sensor group and its electronics as well as the TV camera and the range radars were located outside of the compartments. The omni-antennas were on the end of the long slender booms. Part of the radar electronics were on top of the high-gain radar antenna. There were accelerometer amplifiers mounted on each of the legs. These all contributed, to some extent, to some of the noise problems which were encountered. Much of the mechanical operation of spacecraft devices was accomplished by solenoids and stepping motors. The antenna solar panel positioner (ASPP), driving the solar panel and the planar array, had a stepping motor drive to move them. The TV mirrors and the TV lens assemblies were operated by stepping motors. The gas jets which were on the legs, and the vernier engines, utilized solenoid valves to control their fuel flow and nitrogen flow.

In the consideration of thermal problems it was necessary that the compartments be thermally isolated from

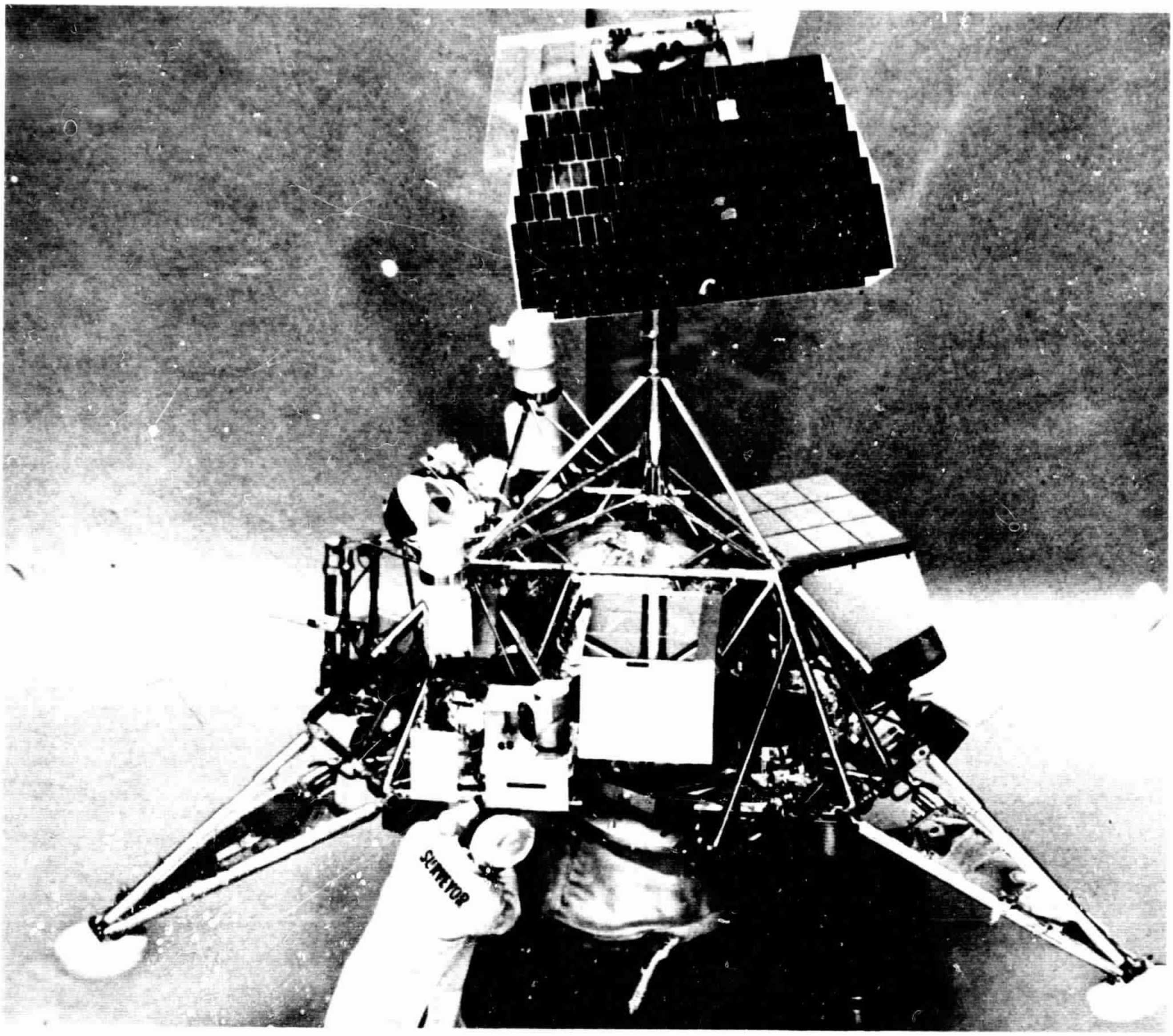

Fig. 1. Early prototype *Surveyor* spacecraft

the spaceframe to minimize heat loss from the compartments at night. This was true of some of the external compartments as well. As a result of this, there were some problems resulting from ungrounded compartments and electrostatic discharges. Beyond that, the problem of grounding the compartments finally resulted in a rather significant trade-off from the EMC standpoint. To limit the thermal flow from the compartment, an extremely small cross-section of wire was used to ground it. This practice proved to be fairly successful although we were doubtful early in the program until it was shown to provide an adequate bond to ground.

IV. EMC Trade-offs

Among the factors affecting trade-offs in the area of weight was the problem of harness shielding. The weight of the shielding desired in these harnesses would have added several pounds to the spacecraft. Is was considered necessary to avoid adding weight if at all possible. As a result, a trade-off was made in which all significant noisy signal lines, such as power circuits, were shielded. The RF circuits and some video circuits were also shielded. For overall shield protection of the harness, aluminized Mylar film, which was already used for thermal protection, was used. A technique was developed for grounding the aluminized coating of the Mylar film. A study showed that this provided a reasonably good degree of shielding at most of the frequencies of interest. The study indicated that a 20- to 40-dB attenuation could be obtained by this method.

When it came to evaluating the need for particular design features from an EMC viewpoint, a trade-off technique was developed. All of the functional operating characteristics of the spacecraft, in terms of commands that could be executed, were evaluated on the basis of whether they were catastrophic to the mission or non-catastrophic, and whether they could be reversed by a command or were non-reversible. This included events that could be initiated by command or would automatically occur as normal operating functions. If a squib blew, it was irreversible, and nothing could be done about it. In some cases, if a squib blew, it would not necessarily be catastrophic, but most squib firings would have resulted in catastrophic action. For example, if the retro ignition squibs blew prematurely, that would end the mission. On the basis of that type of evaluation, all circuits were studied and those that were considered critical or catastrophic or non-reversible, were given the full treatment from an EMC standpoint. On others, where it was felt that sensitivity could be tolerated and the added weight or volume necessary to effect a satisfactory immunity was significant, the circuits were left in a more or less sensitive condition. As an example, inside one compartment there is a circuit which provides for control of the heaters. These heaters could be commanded ON and OFF and they could also operate automatically by means of an internal thermostat, provided they were put in an ON state by command. These circuits were fairly sensitive, and it was found that, sometimes, they might be caused to turn on if proper conditions were met. However, since this was a condition that could be reversed by command, and it was a condition that, because of the thermostatic control, would be more or less irrelevant unless the heaters were needed, no attempt was made to add the necessary fixes to desensitize this particular circuit.

V. Subsystem EMI Problems

In reviewing the *Surveyor* components, Fig. 2 shows the command receiver at the left. In the center and on the right is the transmitter with the local oscillator, the low-frequency multipliers, the high-frequency multiplier and, at the bottom of the right-hand unit, is the TWT. The transmitter contains a high-voltage electronic conversion unit (ECU) which powers the TWT. Figure 3

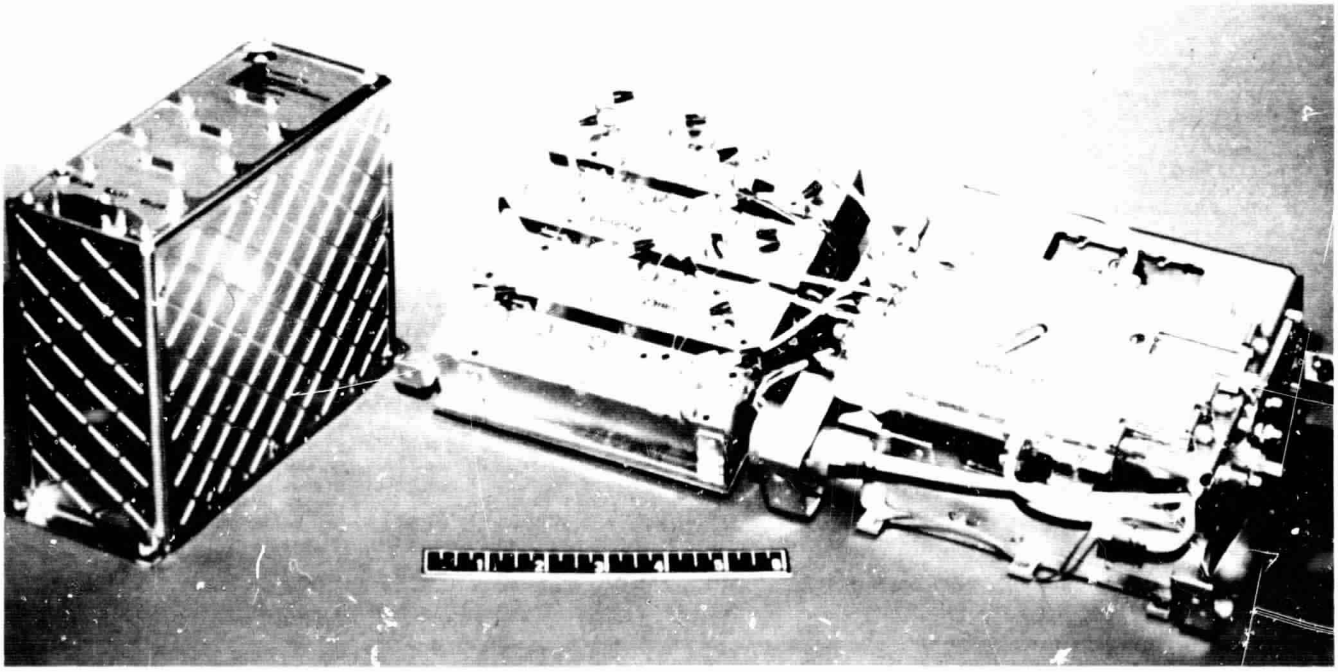

Fig. 2. Spacecraft command receiver (left), and transmitter (right and center)

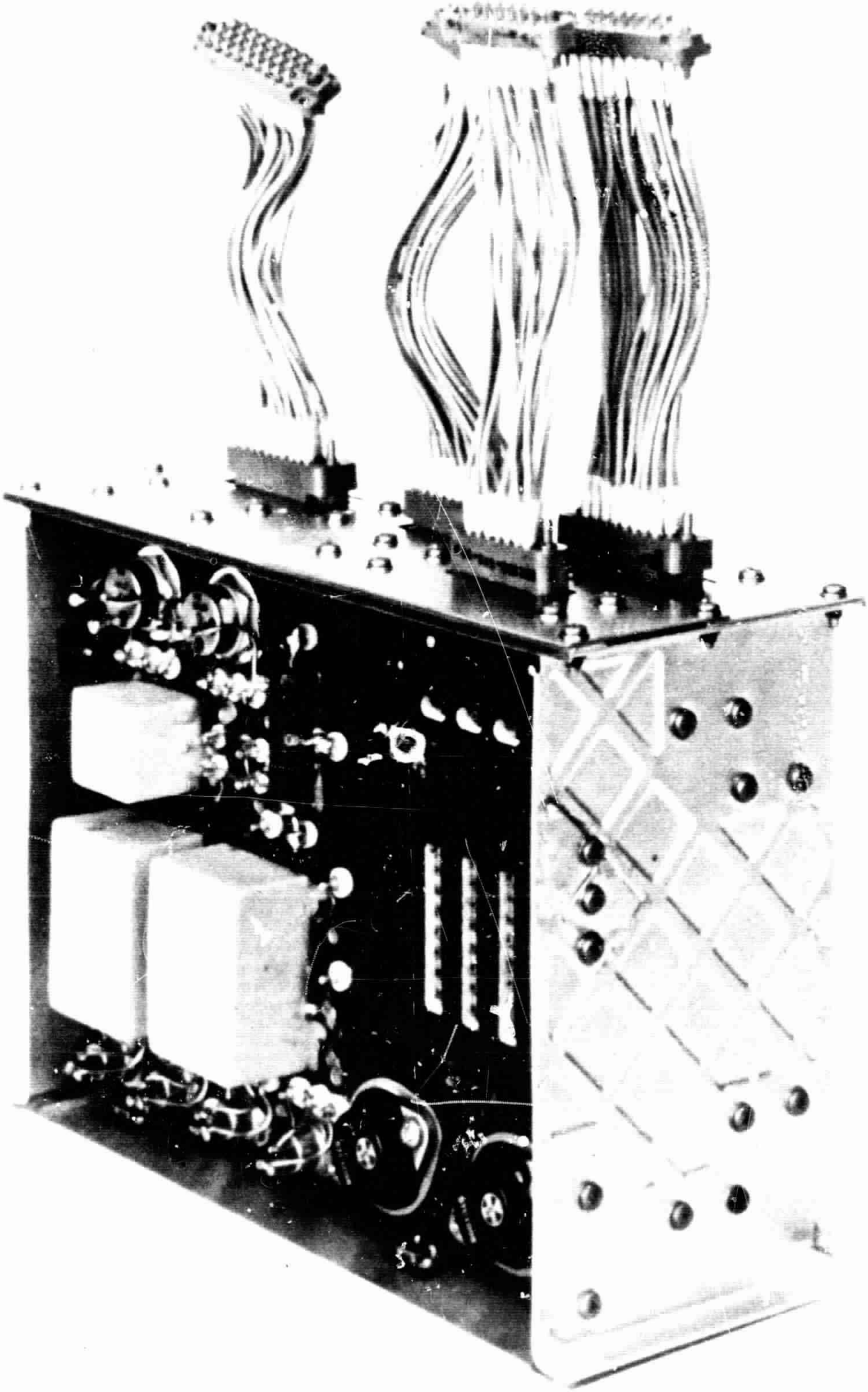

Fig. 3. Engineering mechanisms auxiliary

is the engineering mechanisms auxiliary. This device contains a constant current generator for firing the squibs, silicon-controlled rectifier circuits, and the subsystem command decoder to accomplish the squib firing functions. Figure 4 is the engineering signal processor. This device contains subcarrier oscillators, commutator circuits, and signal processing circuits for processing telemetry data. There are several units, such as the central signal processor and auxiliary engineering signal processor, which aided in these functions. Figure 5 shows the TV camera. There are stepping motors to move the mirror, the lens assembly, and the shutter assembly.

In considering the problem areas found on *Surveyor*, the problem that stood out most prominently was that of electrical transients. These transients were generated by various switching functions in the vehicle, and they tended to trigger inadvertently circuits which should not have been activated by them. Figure 6 shows one of the ways in which inadvertent triggering was a problem. In the block diagram, the receiver output is shown entering the receiver decoder selector, which automatically selects one of the two central command decoders. These decoders are functionally redundant and the main reason for selecting one, or the other, was in case of a decoder failure. This device, in case of a failure, was also able to automatically select receivers. The operator on earth controlling the spacecraft, could then, by interrupting the carrier a sufficient number of times, select any combination of receivers and central decoder he desired. The output of the central command decoders was fed in parallel to the subsystem decoders. Each subsystem had its own decoder. The decoder for the data link, the signal processing, the electrical power, the vehicle and mechanisms operations, and the engineering payload were located in the central command decoder. The decoders for the engineering mechanisms auxiliary, the flight control programmer, the TV auxiliary, and some of the scientific instruments were located in those subsystems themselves. However, the inputs were all paralleled.

The command signal was transmitted to the spacecraft and demodulated in the form of a 24-bit code group. It contained a sync word of 4 bits; 5 address bits which determined which subsystem decoder would respond; the complement of the address to provide a confirming check

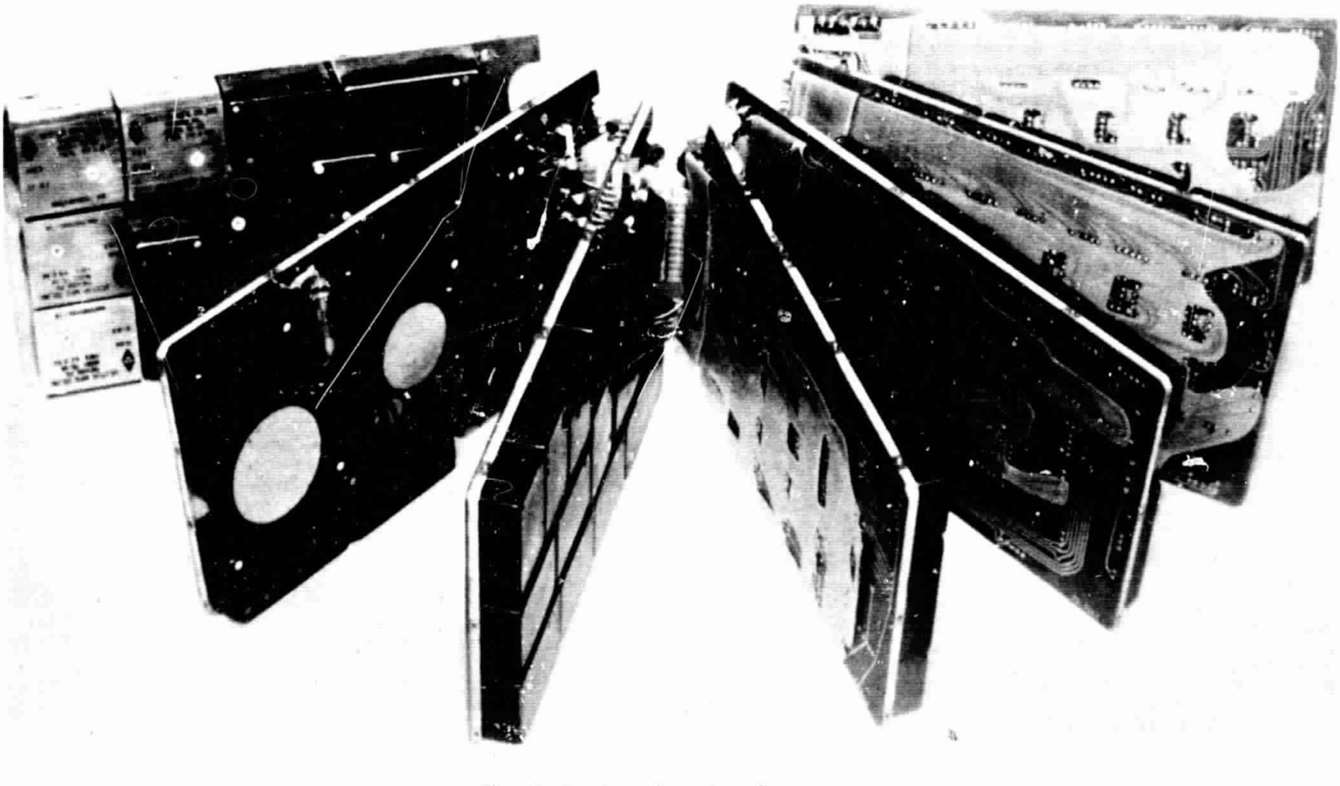

Fig. 4. Engineering signal processor

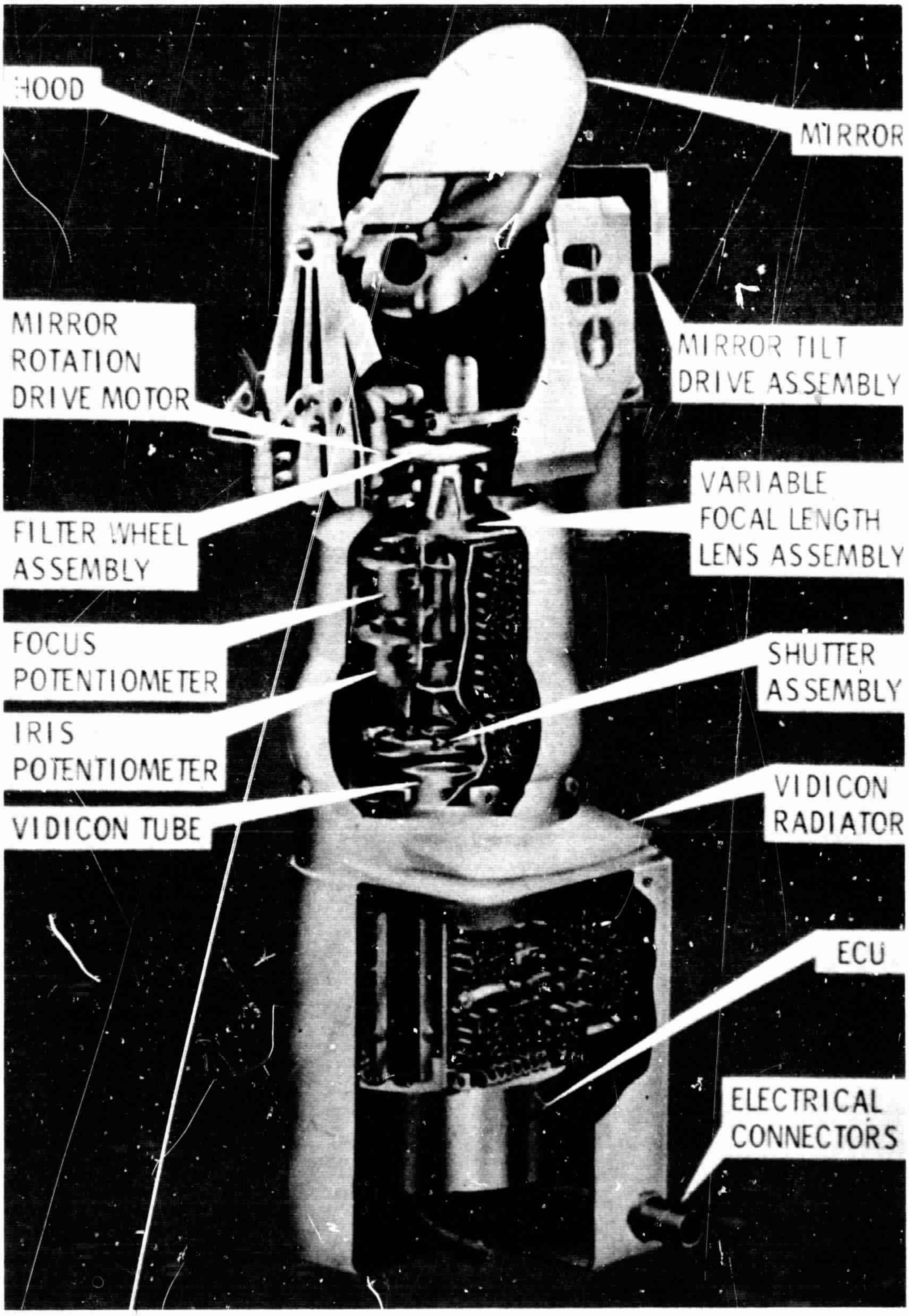

Fig. 5. Television camera

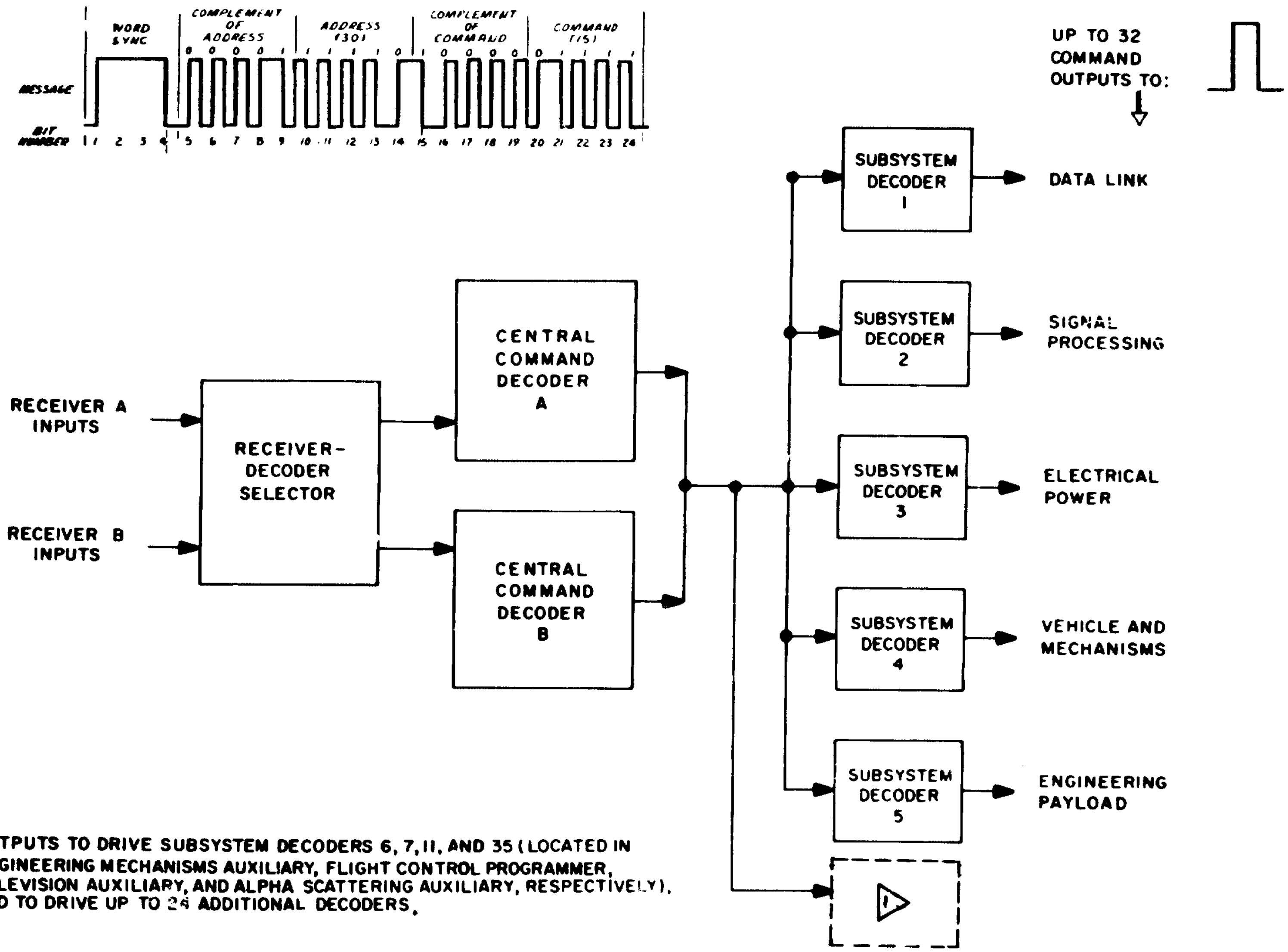

NOTE:

1 OUTPUTS TO DRIVE SUBSYSTEM DECODERS 6, 7, 11, AND 35 (LOCATED IN ENGINEERING MECHANISMS AUXILIARY, FLIGHT CONTROL PROGRAMMER, TELEVISION AUXILIARY, AND ALPHA SCATTERING AUXILIARY, RESPECTIVELY), AND TO DRIVE UP TO 24 ADDITIONAL DECODERS.

Fig. 6. Command decoding group

that the address was received properly; the actual command of 5 bits which determined the particular function within the subsystem addressed that would be commanded; and the complement of the command which was checked to confirm that the command was received correctly. The central command decoder input signal is shown in Fig. 6. This command entered the central command decoder, was checked for complements and for sync, and was fed into the subsystem decoders, all in parallel. If the data link subsystem decoder was the one addressed, it would, in turn, react and, if the complements checked, it would put out a single monopulse 20 ms wide, shown in the upper right corner of Fig. 6, to the particular circuit being commanded. Each subsystem decoder was capable of handling up to 32 outputs representing command functions in a particular subsystem This system worked very well. As a matter of fact, about the only thing that could upset this system was a noise pulse or a series of noise transients that might smear the command and cause the complement to fail to check, or cause the sync to go out. However, beyond this point, problems could exist. In fact, the biggest group of problems on *Surveyor* was the result of electrical noise transients getting into the circuits beyond the subsystem decoder. It was found that some circuits, unfortunately, were sensitive to much shorter duration transients than the command pulse itself. When this occurred, a function could be triggered inadvertently.

Figure 7 shows a typical squib-firing circuit. It illustrates one of the techniques used to minimize the transient problem. The output from the subsystem decoder enters the circuit, which contains a series Zener diode with a breakdown level of approximately 5 V. All of the monopulse command circuits in *Surveyor* used the Zener diode to provide this type of protection. An interlock signal, which was used only for squib circuits, provided a bias that prevented noise transients from activating the circuit. However, to execute this particular command, it was necessary to send a prior command which would remove the interlock signal. When the interlock signal was removed, the firing command was sent, and the pulse activated the constant current generator, simultaneously turning on the transistor, which fired the SCR, resulting in squib ignition. This is typical of the squib-firing circuits utilized. There were noise filters in the circuits, which are not shown in the figure, to slow down the SCR's reaction to a change of voltage with respect to time. There were also filters to attenuate those noise transients which might get through the Zener diode.

VI. EMC Test Activities

Figure 8 is a block diagram of the power subsystem. It is included to show that there were a considerable number of command functions in the power system which might be susceptible to noise. The boost regulator converted 22-V bus power to 29-V regulated for some of the subsystems. The main battery received energy from the solar panel. It should be stated that the spacecraft is powered by the solar panel and not the battery, and that the battery was primarily for storage of excess energy output of the solar panel. The battery-charge regulator also had several command inputs, such as a command to initiate stepping the solar panel, and a command to turn the battery charge regulator ON and OFF and to bypass it. The boost regulator had command

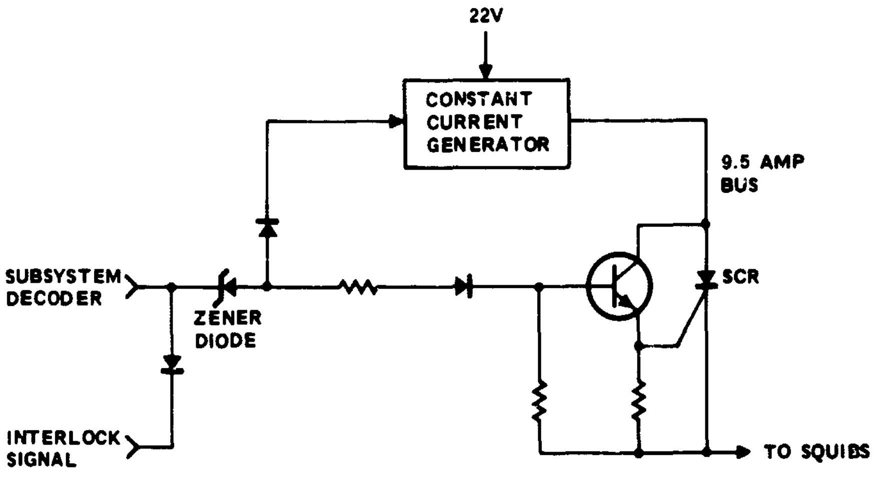

Fig. 7. Typical interlocked command firing circuit

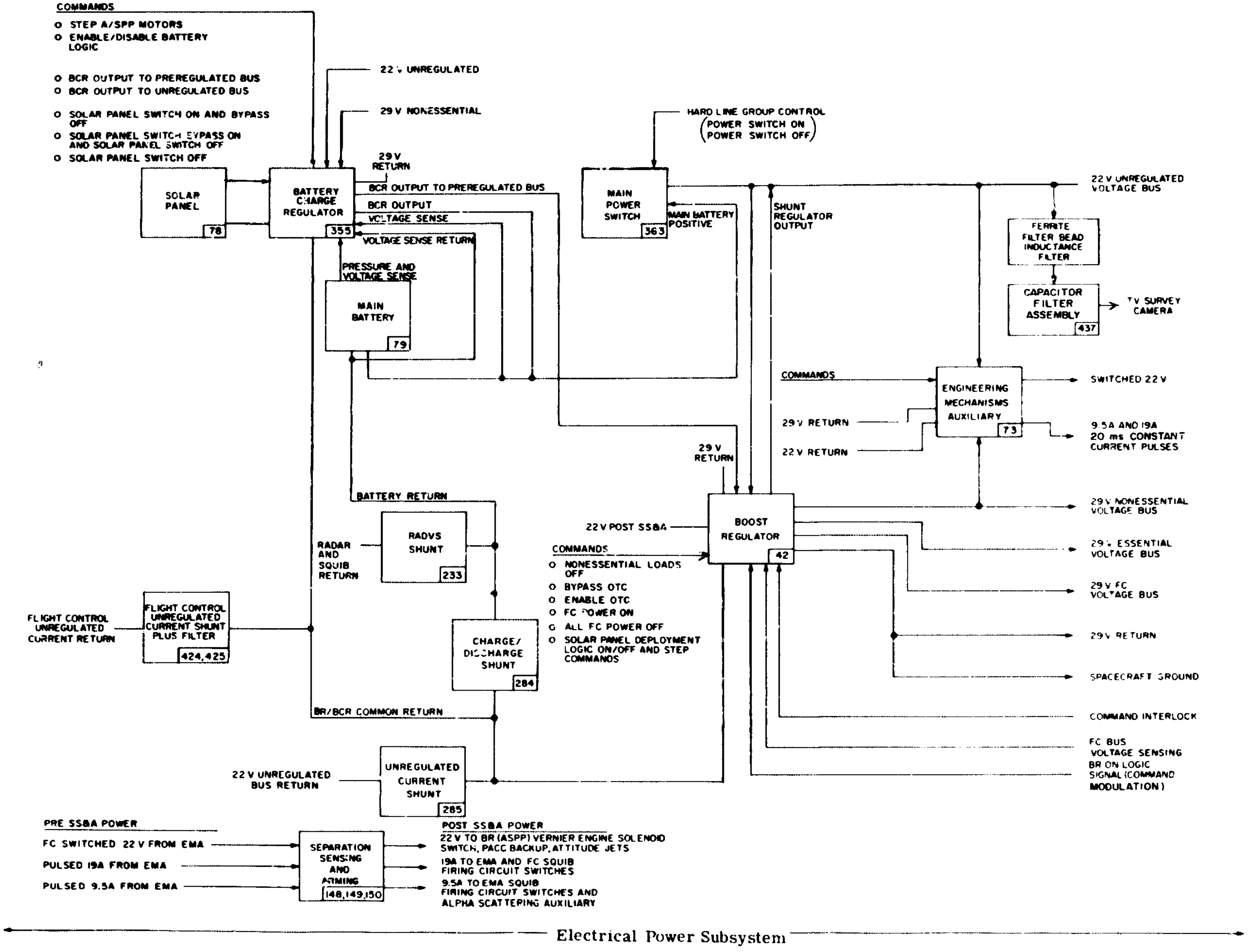

Fig. 8. Electrical power subsystem

functions such as enabling the overload trip circuit, turning flight control power ON and OFF, and turning off the non-essential regulated bus. Most of these circuits, at one time or another, were somewhat sensitive to transients, and in many cases, it was a difficult proposition to determine just what trade-offs should be made in terms of fixes.

Figure 9 shows a pulse that was developed as a result of experience with the early prototypes in *Surveyor*. It is called a *no-go* command pulse. This pulse is approximately 20-V peak amplitude and 500-μs minimum duration at 50% amplitude. This pulse was used to determine the immunity of command circuits to noise transients. The 20-ms portion at 5-V amplitude was utilized to ensure that the Zener diode was indeed in the circuit and functioning when tested. It was found that some of the digital circuits in the spacecraft tended to turn OFF with negative pulses if they were previously ON. This was peculiar to certain flip-flops. Therefore, a means of establishing immunity to transients of both polarities was developed. The main thing was to be careful of not sending the two test pulses so close together that the circuit was turned ON and then was immediately turned OFF without the test operator knowing that this had happened.

Table 1 lists the test activities that were conducted on *Surveyor*. At the component level, conducted noise output tests and radiated noise output tests were performed. These tests were routine EMI tests, performed according to the normal specifications for such things, although the levels involved were those developed for *Surveyor*. Conducted susceptibility tests, both on power circuits and on command circuits, were also performed using spike levels to determine the magnitude of susceptibility. At the system level, quite a few tests were performed; in one test the spacecraft was run through a

Table 1. *Surveyor* EMI test activities

Component level	System level
Conducted noise output CW Broadband Spikes Radiated noise output CW Broadband Conducted susceptibility CW Broadband Spikes	Conducted noise on power bus Conducted noise at command inputs Conducted susceptibility at power bus Conducted susceptibility at command inputs Mission sequence/EMI; ETR simulation Transmitter spurious in receiver pass band Combined system test; *Atlas/Centaur/Surveyor*

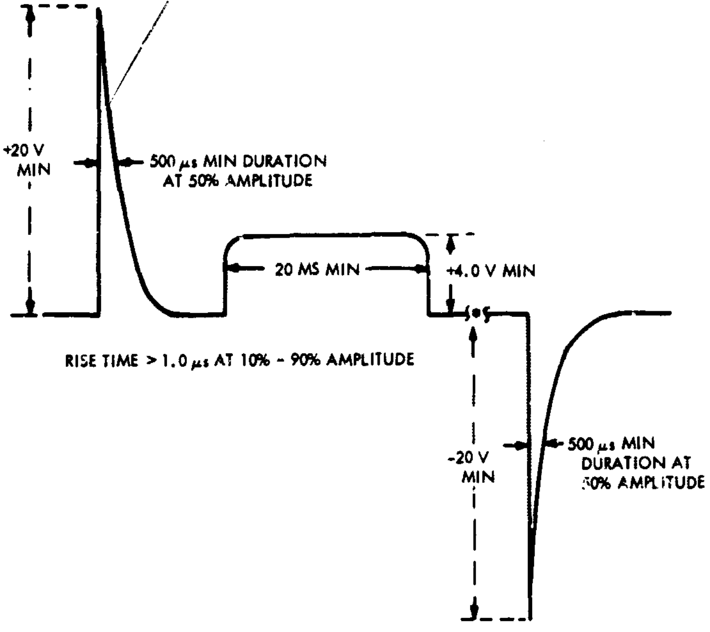

*TIME PERIOD BETWEEN POS AND NEG PEAKS MUST BE SUFFICIENT TO ALLOW OBSERVATION OF TEST DATA, WITH DETERMINATION THAT POSITIVE SPIKE DOES NOT CAUSE INADVERTANT RESPONSE WHICH IS SUBSEQUENTLY CANCELLED BY NEGATIVE SPIKE.

Fig. 9. No-Go command pulse

mission while up to 55 critical command circuits and power circuits were monitored for noise and transients. The monitoring device was an FR1500 tape recorder. It was run at a speed which would yield approximately a 300-kHz response.

Figure 10 shows some of the noise that was found during this test on the command circuits with a tape recorder. After the test was run, many rolls of taped data had been obtained, and it was wondered how these data could be reduced. Finally, a Miller oscillograph recorder was located at TRW, Redondo Beach, that would reproduce 16 channels simultaneously. The tape was played through this device and optically reproduced on paper, side by side, 16 channels at a time, including the command signal, the time code, and the voice channel of the test team. When these tapes were examined and all the data reduced, the types of noise shown in Fig. 10 were obtained. Incidentally, this Miller oscillograph recorder had a speed capability of approximately 400 in./s, such that, for observing fast pulses, approximately 10 μs of resolution could be obtained. This was very useful on some of these noise types. Spikes of all shapes and sizes were found. The recorder was ac-coupled so that the recorded spikes did not necessarily resemble the original transient in the circuit. Some were developed from solenoids turning on, some from the radars operating, and some from the stepping motors. The noise types identified in Fig. 10 illustrate what was encountered. Some types had amplitudes as high as 20 V.

Figure 11 represents a noise spectral distribution envelope of the noise that was found on some of the power buses. The spikes represent electronic conversion unit (ECU) switching frequencies and their harmonics. There were ECUs on the spacecraft for various purposes of regulation from approximately 1100 Hz to 30 kHz. The graph shows relative amplitude; it does not show the magnitude of the spikes. One of the tests required by the customer was a demonstration that the spacecraft would perform through a normal pre-launch countdown when radiated with a field simulating the range radars. To do that, equipment shown in Fig. 12 was used. The racks contained a collection of commercial equipment, commercial RF generators, amplifiers, and modulation devices that produced a field from 500 kHz up to approximately

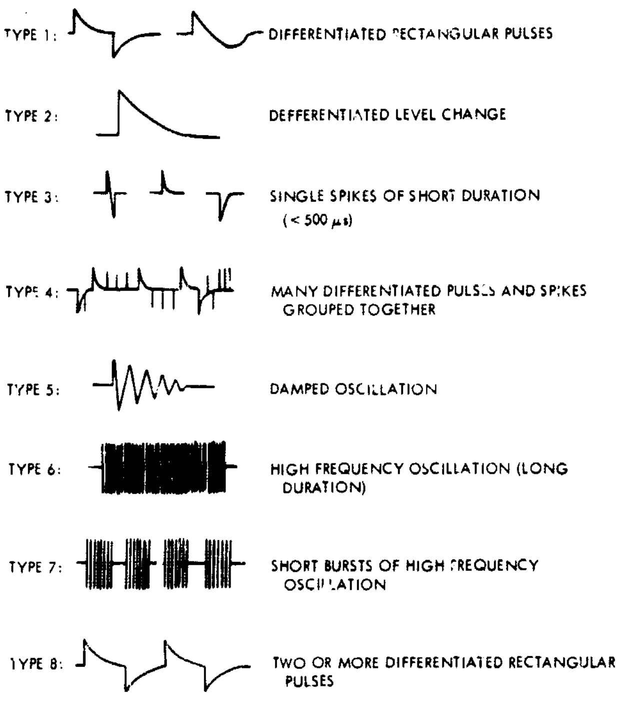

Fig. 10. Noise types

10 GHz. The antennas were required to have sufficient gain, so that, with the low-power sources that were used, the energy levels at the spacecraft could be fairly closely simulated in an effort to avoid the cost of obtaining higher-power equipment. This did work out fairly well. As a matter of fact, no problems were caused by the range radars or other RF equipment at Cape Kennedy.

Figure 13 shows the spacecraft just prior to being encapsulated for a test of the clearance to the shroud. This gives an idea of how the spacecraft was encapsulated. Early in the program, there was some concern about the electrostatic accumulation on this shroud because it was of a fiberglass material. This material was believed to have a reasonably high electrical resistance. However, as is evidenced by the success of the launches, no problem was experienced with it.

With the resulting probability of five successes out of seven shots, the spacecraft behaved well in spite of all the noise.

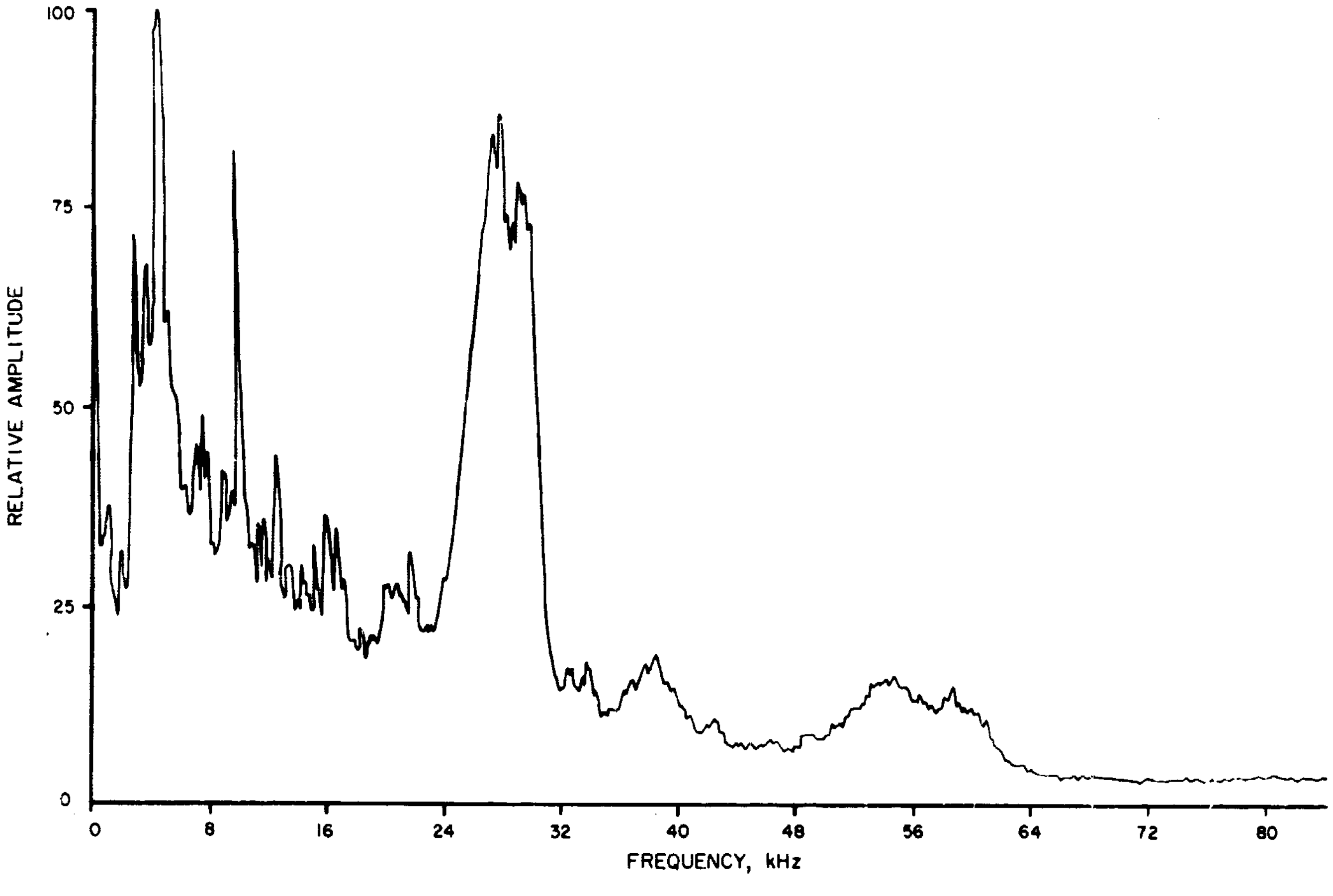

Fig. 11. Noise spectrum on 22-V bus

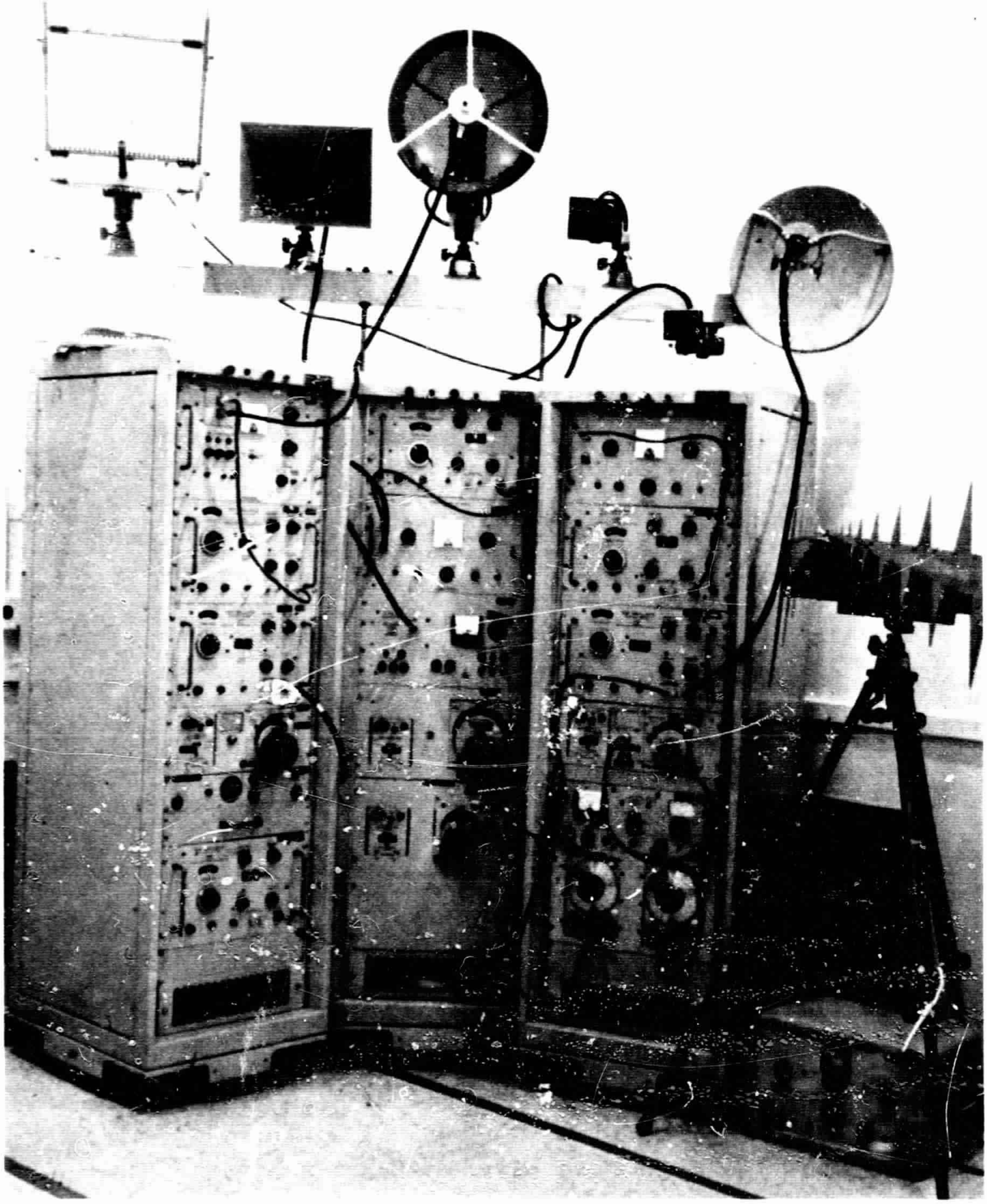

Fig. 12. MS/EMI test console containing RF energy generators

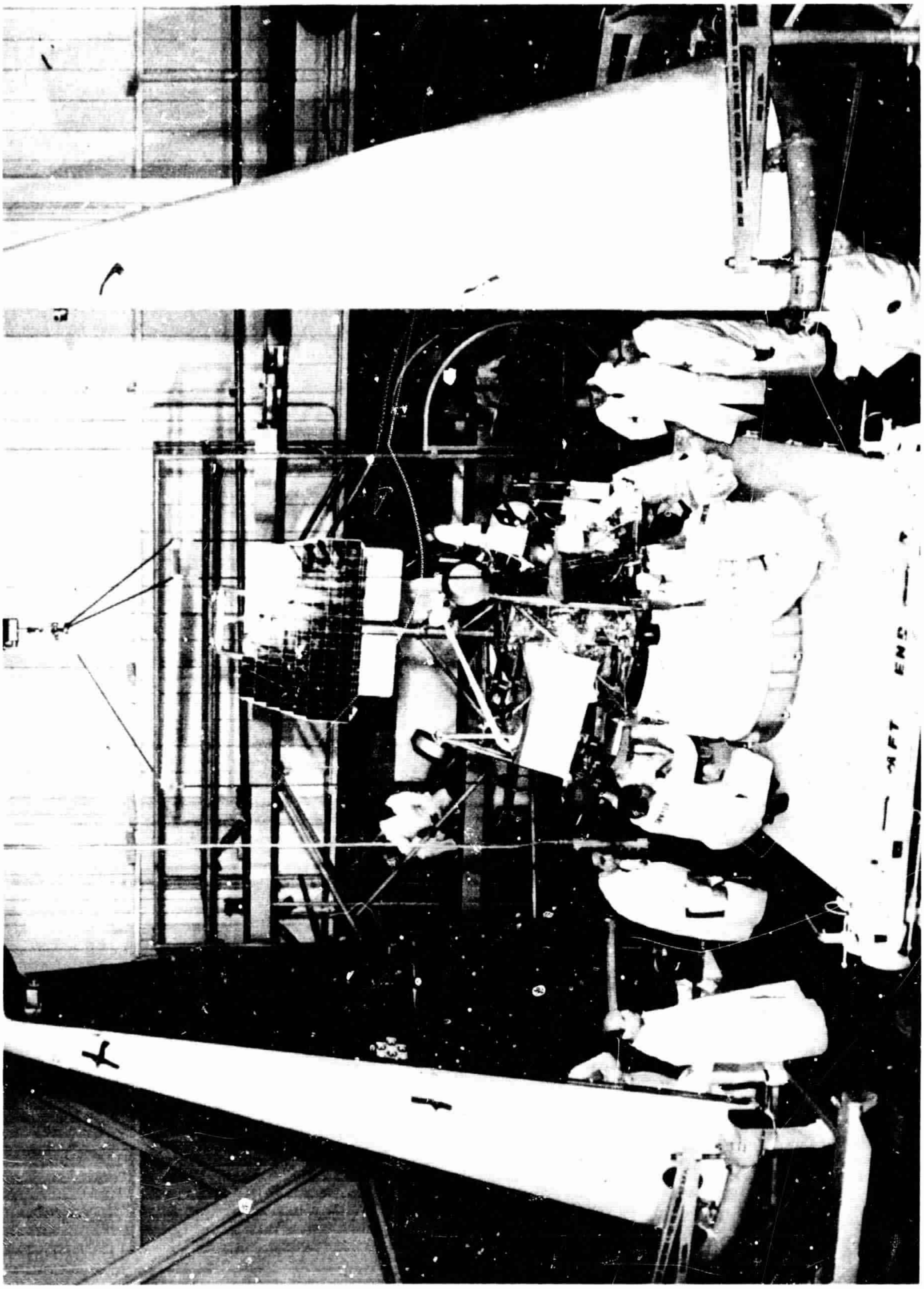

Fig. 13. Surveyor spacecraft preparation for encapsulation in *Centaur* nose fairing

Discussion

Larry L. Pangburn: It sounds to me like you did an excellent EMC systems engineering job. Just as it should be done, in my opinion. You indicated that only certain wires would be shielded, based on your look at it. Then you indicated that an overall shield was necessary over cable bundles. What was the reason for that?

Donald Wilbur: This shield was felt to be desirable, particularly because of exposure of the spacecraft to the fields at the launch pad. Since we did have the thermal wrap, which we were able to ground and utilize as a shield, we took advantage of it. In the beginning, in spite of the study that had been done on this wrap, we were not really convinced that it was going to be effective. The way it turned out, we feel that it did the job.

John P. Quitter: I would like to add a remark which I forgot to make earlier. The EMC program that you outlined, and the design requirements that *Atlas* and *Centaur* were designed to, which were based mostly on MIL-I-26600 and a General Dynamics Corporation specification, show that different parts of the system can be designed to good EMC standards and EMI practice and still give a reasonable expectation that, when you put them together, you will not develop any unexpected problems.

Donald Wilbur: I might mention that it was a running battle all along. It was not quite as simple as developing some requirements, creating a piece of hardware and running it through test without problems. Most of the problems were real and not imaginary ones. I might add, with respect to Mr. Quitter's earlier paper, that there was an extensive effort between the initial presentation of the interface sensitivities by Hughes Aircraft Co. and the eventual presentation of the revised levels. The revisions were not all due to changes of interpretation or means of specifying the interface. Some were due to fixes that were felt necessary.

Paul Michaels: Could you tell us specifically how you did make the connections to the aluminized Mylar films?

Donald Wilbur: In the case of the wrapping on the harness, a stainless steel wire was wrapped around the aluminized side and then grounded. Another layer of aluminized Mylar was placed over that, the two sides of the aluminum being together.

Paul Michaels: Was there bonding with epoxies or adhesives?

Donald Wilbur: No bonding and no adhesives that I am aware of. There may have been something. I did not get into the final mechanics of it.

Hector M. Smith: I wonder if you can tell us what the sensitivity of the receivers on the *Surveyor* were, and whether you expected any problems from earth transmitters when the spacecraft was on the moon?

Donald Wilbur: The specified sensitivity was −110 dBm, the actual sensitivity was closer to −117 dBm. We did expect problems; however, we had fewer than expected. First of all, during test operations on the system, one of two techniques was used: either the coax cable was removed from the antenna and coupled directly into the test equipment to eliminate outside noise, or an RF absorbent box was placed over the antenna in use to exclude external noise. This largely left us with the problem of operation at the launch pad. Surprisingly enough, we did not run into any problems at Cape Kennedy. There were apparently no other signals on our frequency.

You might be referring to extraneous signals and on nearby frequencies. The phase lock loop bandwidth on this receiver was 400 to 500 Hz, which made it very difficult to interfere with, especially if you did not have a coherent signal.

James F. Frye: I am still interested in the Mylar tape. Since we build digital computers, and digital information is inherently noisy, and since inter-box cabling is a prime contributor to radiated noise, I would like to ask two questions: (1) what is the useful frequency range of this tape? (2) is there anything published, or will there be, that might outline how this tape was used?

Donald Wilbur: The study that was made did not cover above 30 MHz. From your standpoint, I am not certain whether it is useful. There was nothing published other than internal reports. These are possibly available; I will look into making them available.

William J. Coleman: With reference to Fig. 12, which showed various racks full of transmitters and an assortment of antennas on top, I believe you said that these devices were in connection with testing to ensure that the spacecraft could withstand the environment at Cape Kennedy. If this is true, then, apparently, this is your setup for meeting the AFETRP 80-2 requirements of range safety. I wonder if you could tell us a little more about your setup for achieving 80-2 compliance. For example, was this equipment located in an anechoic chamber?

Later in your talk you mentioned that the Mylar tape was also used to help your electrical systems withstand the RF environment at Cape Kennedy. This appears also to have been for the survivability option of the 80-2 requirement. Could you tell us a little about your 80-2 program?

Donald Wilbur: With respect to the AFETRP 80-2 requirements, at the time this program was carried out and at the time we received permission to launch, there was not such a requirement. In other words, I am certain that this requirement was included in the revision of AFETRP 80-2, after we received basic acceptance of the spacecraft at Cape Kennedy. As to the tape's effectiveness at these radar frequencies, I have no test data or analysis to support my earlier remarks. The prime requirement that we had to meet with AFETRP 80-2 was squib circuit susceptibility. The Air Force did not specify power levels to use in making those tests, nor an anechoic chamber. The equipment used did not represent the peak power levels that were known to exist at the launch pad at the time of the first launch. This was due to a trade-off that was made relative to a judgment as to whether we would use average power levels or peak power levels. It was decided to use average power levels for that simulation. In addition, there were changes in the range radar spectrum and power levels during the period when *Surveyor* was developed and launched. Considerable changes took place, such as addition of higher powered radars, which may or may not have been simulated on later *Surveyor* vehicles that we launched. There were changes in the test program relative to these power levels, and I do not have the figures as they relate to separate spacecraft.

Lawrence C. Montgomery: I think you might be interested in a couple of techniques that were developed by Hughes Aircraft Co. regarding range safety. As Mr. Wilbur pointed out, there was a Mylar layer over the *Surveyor* retrorocket. This was of quite great concern for range safety because of the electrostatic charges that could build up on it (100,000 V with one swipe of a gloved hand, for instance). The configuration that evolved was the sewing of a wire in through this insulation that came within ⅛ in. in each direction; in other words, made a little ⅛-in. square. This was a continuous sewing that allowed grounding of this particular Mylar material. Thus, you could discharge the static charges from that particular Mylar and insulation. The other technique was that squib circuits were completely shielded with no gaps between the

Discussion (contd)

back shell and the shielding itself, so that it met range safety in that respect. Other places where there was any use of nonconductive plastics, which Hughes Aircraft Co. used to cover up some of their equipment for protection during ground-handling stages, an ionized blower was used during the handling of these items to discharge the static charges built up on them. In this respect, we did meet the range safety requirements of no-static discharging of materials.

PRECEDING PAGE BLANK NOT FILMED.

N69-25432

The *Lunar Orbiter* Electromagnetic Compatibility Program Philosophy

Robert O. Lewis, Jr.
The Boeing Company
Seattle, Washington

I. Introduction

The *Lunar Orbiter* (LO) program has been one of NASA's greatest successes. We at Boeing like to think that our "common sense" approach to electromagnetic compatibility (EMC) was a significant contributor to that success and would like to pass the approach along for your consideration. Before going into the EMC program, a discussion of the *Lunar Orbiter* mission, spacecraft, and launch vehicle is in order.

The *Lunar Orbiter's* primary mission was to obtain 1-m-resolution limited-coverage pictures and 10-m-resolution wide-coverage pictures of several prospective *Apollo* landing sites. After the primary mission was completed with the first three spacecraft, a mapping mission was proposed, and 90% of the moon's surface was photographed with the last two spacecraft.

The LO spacecraft was 3-axis gyro-stabilized with provisions for utilizing the sun and the star Canopus as celestial references. Two limit cycles were available for attitude control, ±0.2 and ±2.0 deg. The sun sensor was mounted on the +X side of the equipment mounting deck (see Fig. 1) and the Canopus tracker was mounted on the equipment mounting deck +Y axis between the programmer and the inertial reference unit. The programmer is a special-purpose random-access serial computer with 128 21-bit words of memory and 120 commands. The photo subsystem package is mounted on the Z axis with the lenses pointed upward in the +Z, −X plane.

The photo subsystem is a pressurized, thermally controlled camera, film processor, and readout unit. A dual-lens (80 mm and 24 in.) image-motion-compensated, f5.6, 70-mm camera and a 5-micron spot-scan readout assembly combine to record, process, and read out photographs, with a minimum system resolution of 76 lines/mm.

Communication between the spacecraft and the Deep Space Instrumentation Facility (DSIF) is provided by (1) the transponder (mounted outboard on the −Z axis, Fig. 2), (2) the rotatable-boom high-gain antenna, (3) the traveling-wave tube amplifier

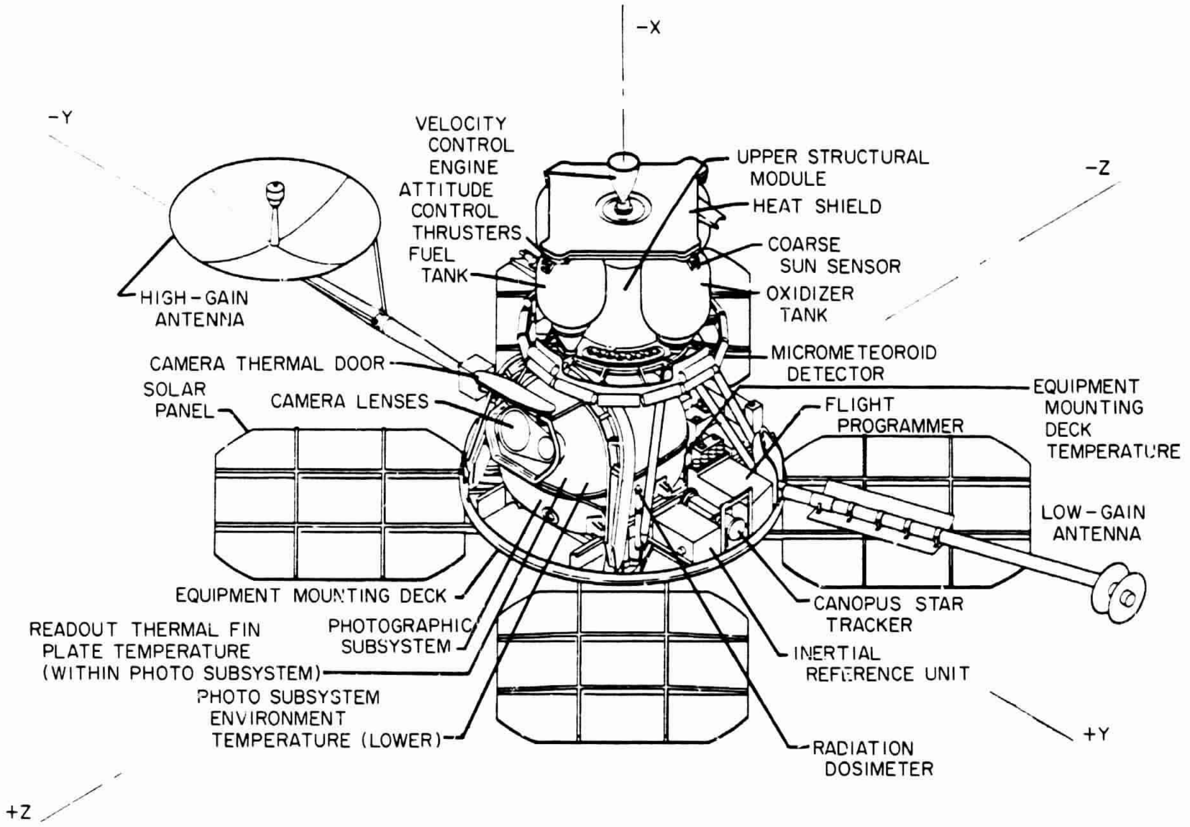

Fig. 1. *Lunar Orbiter* **spacecraft, View I**

(TWTA) (next to the high-gain antenna support), (4) the command decoder (next to the TWTA, away from the high-gain antenna support), (5) the modulation selector (next to the programmer, toward the transponder) and (6) the biconical horn omnidirectional or low-gain antenna (on the end of the second boom).

The transmitting frequency was approximately 2.3 GHz with 400 mW radiated from the omnidirectional antenna and 10 W radiated from the high-gain antenna. The receiving frequency, through the omnidirectional antenna, was approximately 2.1 GHz. The receiver sensitivity was −142 dBmW for a 100-Hz bandwidth. The DSIF stations utilized 85-ft antennas and had a receiving sensitivity of −170.8 dBmW at 12-Hz bandwidth.

The velocity control subsystem consisted of (1) a gimballed 100-lb-thrust hypergolic-fueled rocket engine (on −X axis), (2) associated fuel tanks, (3) oxidizer tanks (on upper deck), (4) controls, and (5) thrust vector actuators (not shown).

The power subsystem derived its primary power from four solar panels (shown deployed). The solar array supplied power to the spacecraft and the charge controller (on the −Z axis behind the transponder). The charge controller provided current to two 12-V 12-Ah batteries (on each side of the charge controller), which were used for spacecraft power when the sun was occulted. The shunt regulator (behind the parabolic antenna hinge) kept the spacecraft bus voltage at 30.5 V by shunting off the excess power produced by the solar array.

Instrumentation was provided by a multiplexer encoder (behind the battery on the −Y side). In addition to the items listed above, the spacecraft had (1) two radiation detectors, (2) 20 micrometeoroid detectors, (3) a thermal blanket (not shown), (4) a camera thermal door (open in front of the camera lens) and, of course, (5) the basic structure.

The spacecraft was mounted on an adapter, covered with a shroud, and mated to the forward section of the

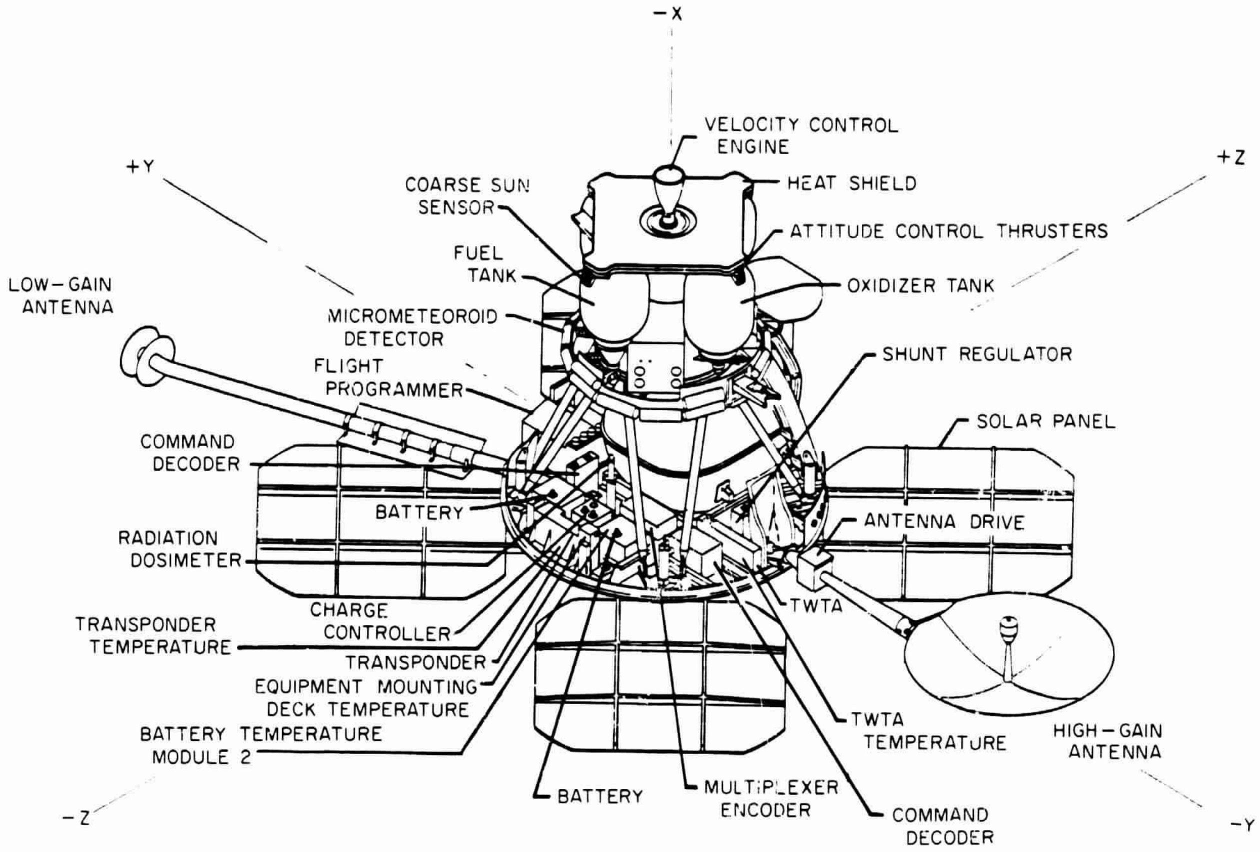

Fig. 2. *Lunar Orbiter* spacecraft, View II (reverse)

Atlas/Agena D (see Fig. 3). All launches were from Pad 13 at the Air Force Eastern Test Range (AFETR).

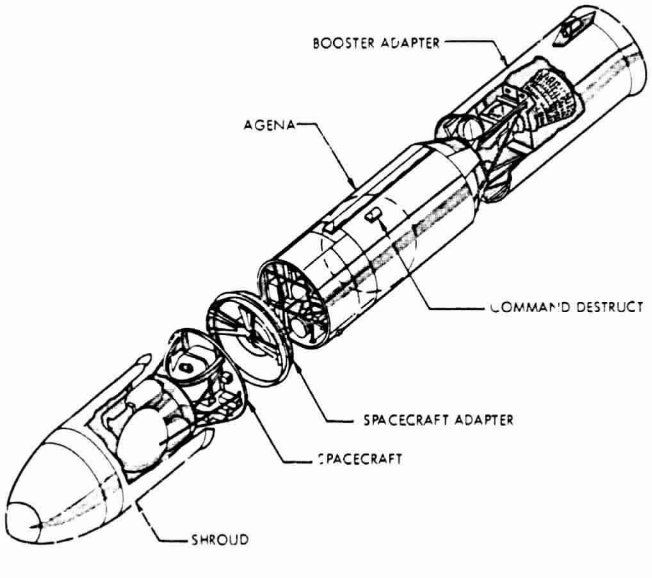

Fig. 3. *Lunar Orbiter/Agena* vehicle (expanded)

II. Establishing the EMC Requirements

The *Lunar Orbiter* contract which Boeing won in March 1964 contained no reference to an interference specification, but only required compatibility with the launch vehicle and the DSIF. The proposal referred to MIL-I-6181D. This specification, however, had very little application to the LO spacecraft since there was no problem of having spurious signals detected by an enemy. (As a matter of fact, very special equipment is required in order to be able to detect the spacecraft's intended transmission.) Military specifications are not particularly suited to digital systems, and the LO is basically digital. While the craft was operating in space, only one specific compatibility problem could exist, and this would be between *Lunar Orbiter* and *Surveyor*. However, compliance with MIL-I-6181D would provide little assurance of compatibility between LO and *Surveyor* because of the 6181D test methods. Tests of the LO transmitter and receiver would require extremely slow scanning speeds to allow the transponder to lock on an interfering signal. Rates of approximately 500 Hz/s should be used, but sweeping at this rate would take a little over 3½ weeks to sweep only 1 GHz. For these reasons it was not possible to find a specification that could give a reasonable probability of compatibility at a nominal dollar and weight cost. Therefore, it was necessary to write a new specification. The first step was to forget all interference specifications and start anew with just one objective—electromagnetic compatibility.

A. Establishing the Spacecraft Susceptibility Requirements

In establishing requirements, there are many iterations of establishing, cross checking, and readjusting, since none of the requirements established can be independent of the others. What follows below is the result of the *Lunar Orbiter* studies. (Approximately 2 months were available for writing the *Lunar Orbiter* specification.) The result is applicable only to *Lunar Orbiter* and is not intended to be a universal type of specification.

The radiation environment was investigated in the factory, on the pad during launch, in flight through the critical pressure region, in parking orbit, in translunar cruise, and in lunar orbit. The launch pad and early launch period were found to be the most severe environments for continuous-wave and radar-type signals. Passing through the critical pressure region during launch was determined to be the peak environment for broadband interference. Due to large-scale welding operations that could not be anticipated at the time the specification was released, the factory area broadband interference was actually the highest. Figure 4 shows the AFETR environment, and, in particular, the approximate location of transmitter and receiver antennas on the launch vehicle. Figure 5 is a plot of the AFETR transmitter field intensities at Pad 13 as well as the vehicle transmitter field intensities at the spacecraft. A tracking radar in the Indian Ocean is also shown, even though its existence was not known until shortly before the first launch. From this RF environment the continuous-wave radiated susceptibility limit was chosen to provide a 6-dB margin above the environment. It was not possible to do this for the *Agena* C-band beacon because of the difficulty of obtaining fields any higher than 44 V/m.

The broadband radiated susceptibility limit established was based upon the launch vehicle charging to a voltage of 100,000 V and corona discharge pulses with a rise time of 25 ns, which is a time rate of change of 4×10^6 V/μs. This level is equivalent to 194 dB

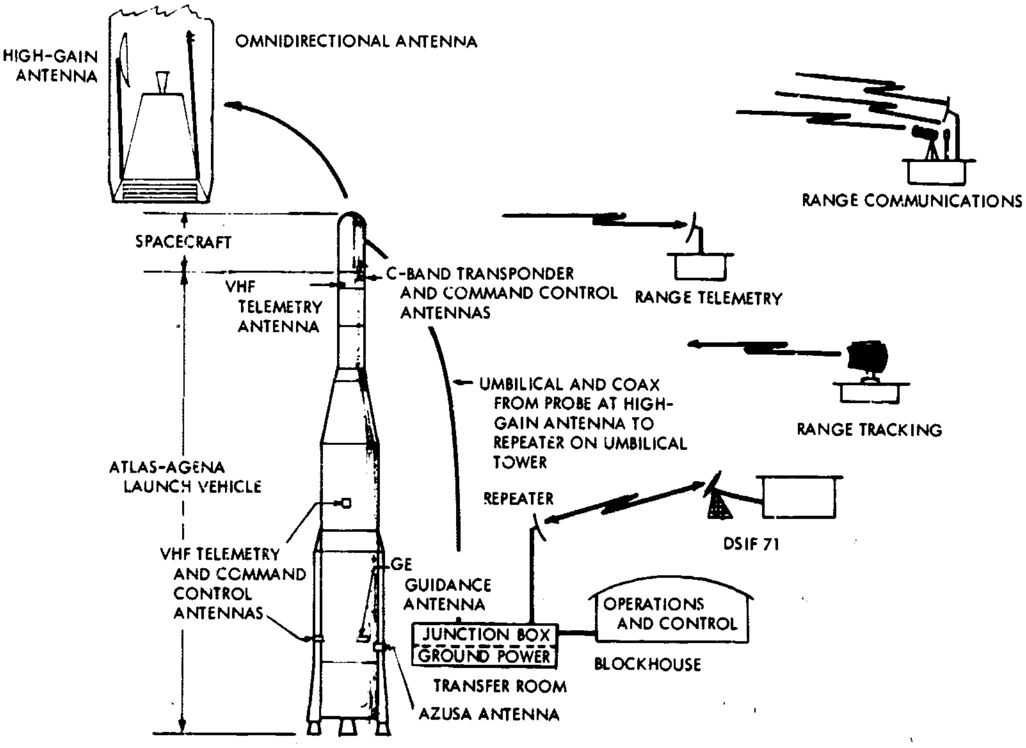

Fig. 4. AFETR electromagnetic environment

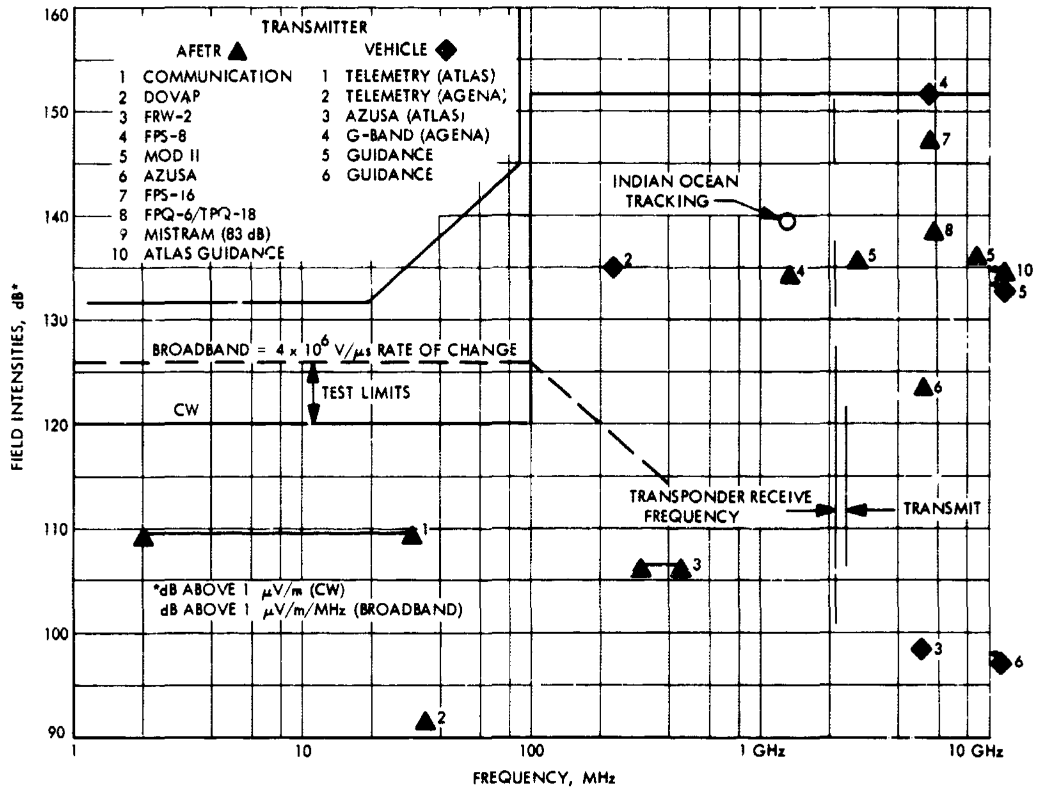

Fig. 5. Susceptibility test limits compared with AFETR environment at Pad 13

above 1μV/MHz (assuming triangular wave shape) and was beyond generator capability in the low-frequency region. A generator was found capable of 2000 V with a $\frac{1}{2}$-ns rise time, which is equivalent to the 4 × 10^6 V/μs rate of change and thus simulates the high-frequency end of the corona spectrum. The generator chosen could provide 126 dB above 1 μV/MHz from low frequency to 100 MHz. Thus this level was established as the requirement. This then was the method used to establish the radiated susceptibility design and test limits.

B. Establishing the Spacecraft Radiated Generation Requirements

The allowable radiated generation from the spacecraft is a function of the sensitivity of the reception equipment with which the spacecraft can interfere. Again it turns out that AFETR was a major factor. There was, however, no specification that defined the allowable radiated field vs frequency at AFETR. The closest thing was the range communications instruction (RCI) 30-29 telemetry closed-loop radiation limit. Because this limit is lower than FCC regulations, the FCC need not be considered. The RCI limit is specified at 100 yards and therefore must be adjusted to 3 ft. An inverse proportion with distance was used in adjusting, and this limit was placed upon the spacecraft aerospace ground equipment (AGE) as shown in Fig. 6. The spacecraft, the *Atlas*, and the *Agena* all had receivers requiring a more stringent limit for the spacecraft (see Fig. 6). These calculations were based upon antennas looking at each other and upon the spacecraft shroud being transparent. Here, again, equipment problems must limit the requirements for interference. The interference meters are not sensitive enough to measure the required levels. As a result, the limit was based upon a compromise between equipment availability and the requirement. This approach then left only three problem areas: (1) broadband to the *Agena* receiver, (2) CW to the *Agena* receiver, and (3) CW interference of the spacecraft with itself. Fortunately, later in the program, the shroud was changed from a transparent shroud to an opaque shroud with a minimum of 17 dB attenuation. This change then made the limits quite realistic.

The broadband limit was not so easy to establish. Here it was necessary to find the bandwidth of all the receivers at AFETR and adjust the RCI limit using

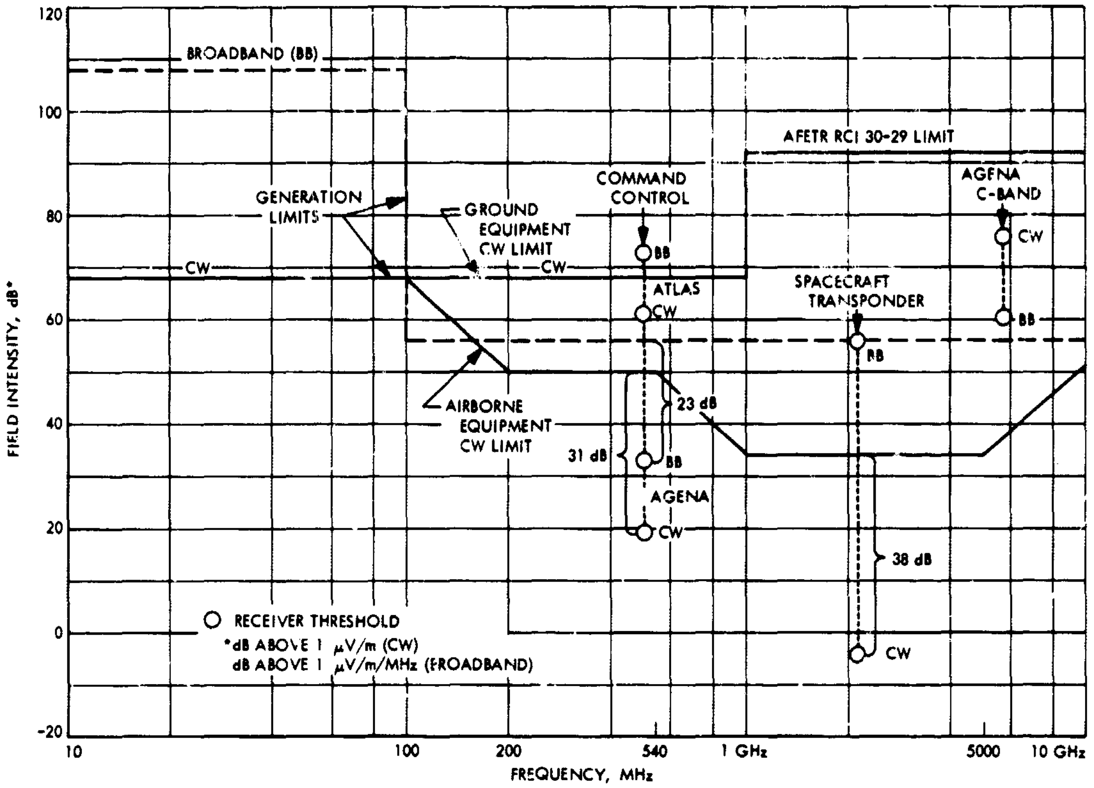

Fig. 6. Generation limits compared with receiver threshold

these data. Figure 6 shows the result of this work. The limit below 100 MHz remained the same down to 150 kHz for both broadband and CW. The broadband limit is quite high in the 150 kHz to 100 MHz region. To assure that the spacecraft total broadband interference would not exceed this value, it was decided that the total allowable interference in this frequency range should be allocated on the basis of average component input power, or power generated, in the case of the spacecraft power subsystem. This was modified to apply the 10-W limit to units which required less than 10 W. The distribution of the power for the spacecraft will be shown later.

C. Establishing the Spacecraft Conducted Interference Requirements (Generated and Susceptibility)

Since the spacecraft was basically a digital system, Fourier analysis of a great many pulses was required. In order to facilitate these computations, a Fourier analysis chart (Fig. 7) was developed from work done by H. L. Rehkopf of The Boeing Company.[1] The chart is used by plotting (1) the average duration of a pulse vs its peak amplitude and (2) its rise time vs the peak amplitude. Then a line is drawn up to the right at 45 deg through the first point, starting from the repetition frequency, between points (1) and (2) and sloping down at 45 deg to the right. The interference spectrum can then be read on the dB μe/MHz and frequency scales.

From the specification limits shown in Fig. 7, it can be seen that there are four orders of magnitude difference between the allowable spikes on a power system from MIL-STD-704 and the conducted interference limits of MIL-I-6181D. It is obvious too that the spike susceptibility test is not adequate if MIL-STD-704 quality power is allowed. Therefore, we again considered the compromise of increasing the spike susceptibility level by lengthening to 21 μs the average duration of the spike and choosing a conducted generation limit higher than 6181D but lower than MIL-STD-704. Figure 8 shows the limits chosen. The CW susceptibility limit is the same as 6181D with a little modification at the low frequency end based upon the internal impedance of the spacecraft power subsystem. The pulse

---

[1] Presented at the Fourth Professioal Group on Radio Frequency Interference (PGRFI) Symposium, June 1962.

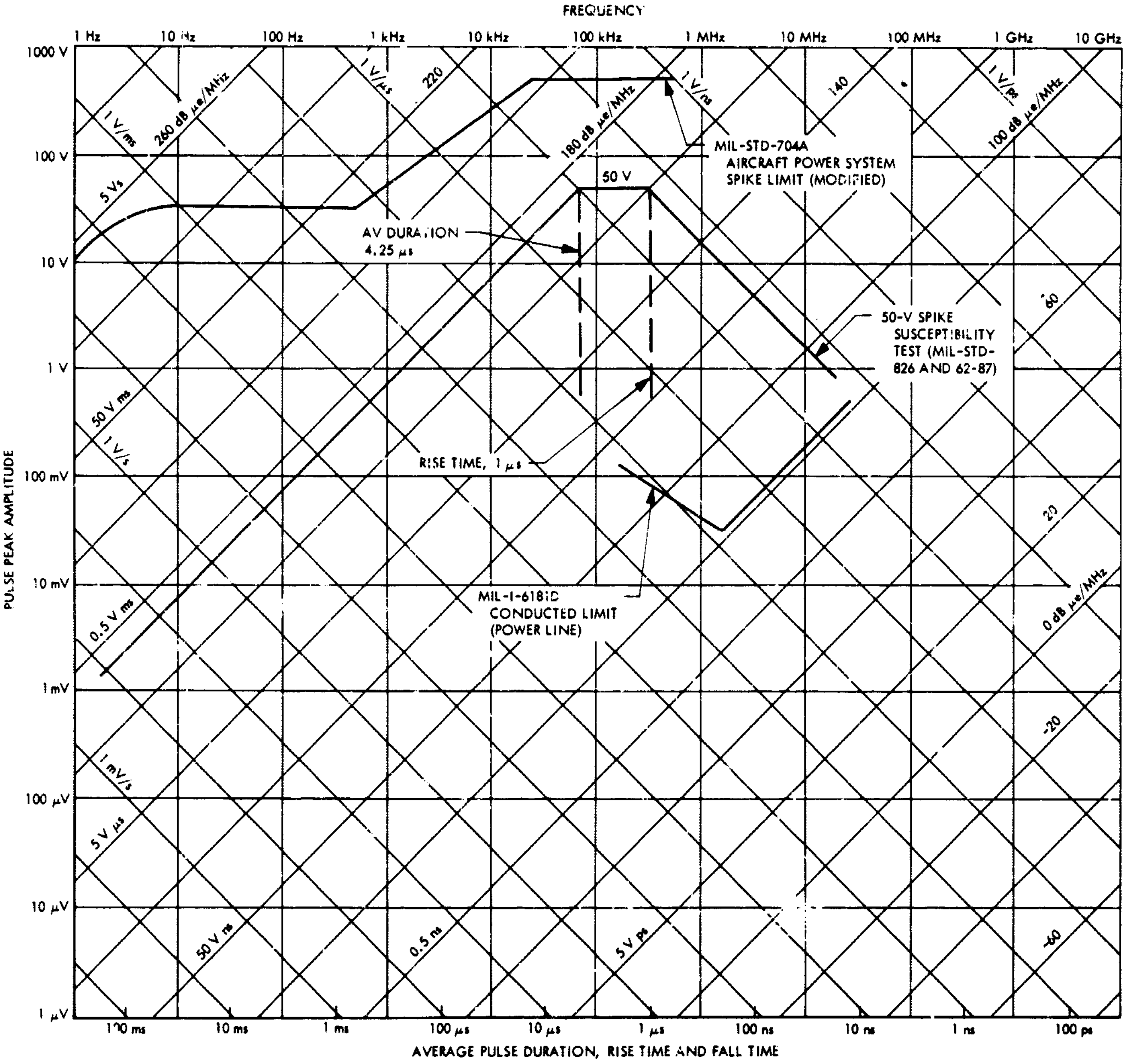

Fig. 7. Broadband interference specification comparison

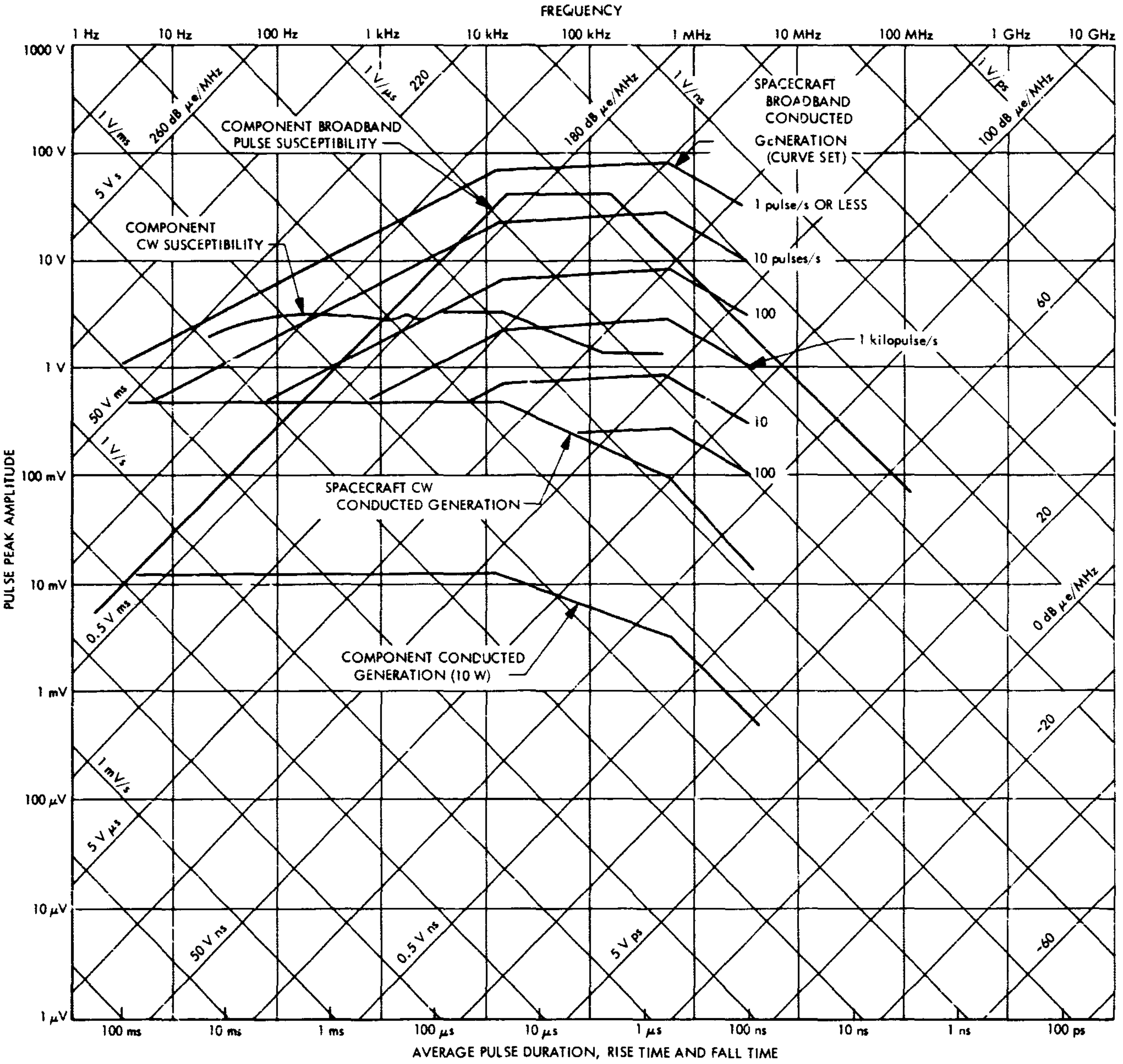

Fig. 8. Spacecraft and component power line conducted generation and susceptibility

susceptibility test is as previously described. The spacecraft CW conducted generation limit is chosen to provide an adequate margin to the CW susceptibility limit. The spacecraft broadband conducted generation limit is based upon constant average pulse power with the average pulse power following the contour of the CW limit. The broadband and CW conducted generation limits for the spacecraft are shown. The limit for components is made a function of input power so that a 10-W unit would have a limit defined by moving the whole set of curves down to the line marked component-conducted generation (10 W). Thus in the worst case when all component interferences add (which is extremely unlikely), the spacecraft power bus would have the power quality near that of the upper set of curves. Table 1 shows the distribution of allowable system interference to components. It was necessary to guess at total power when the interference specification

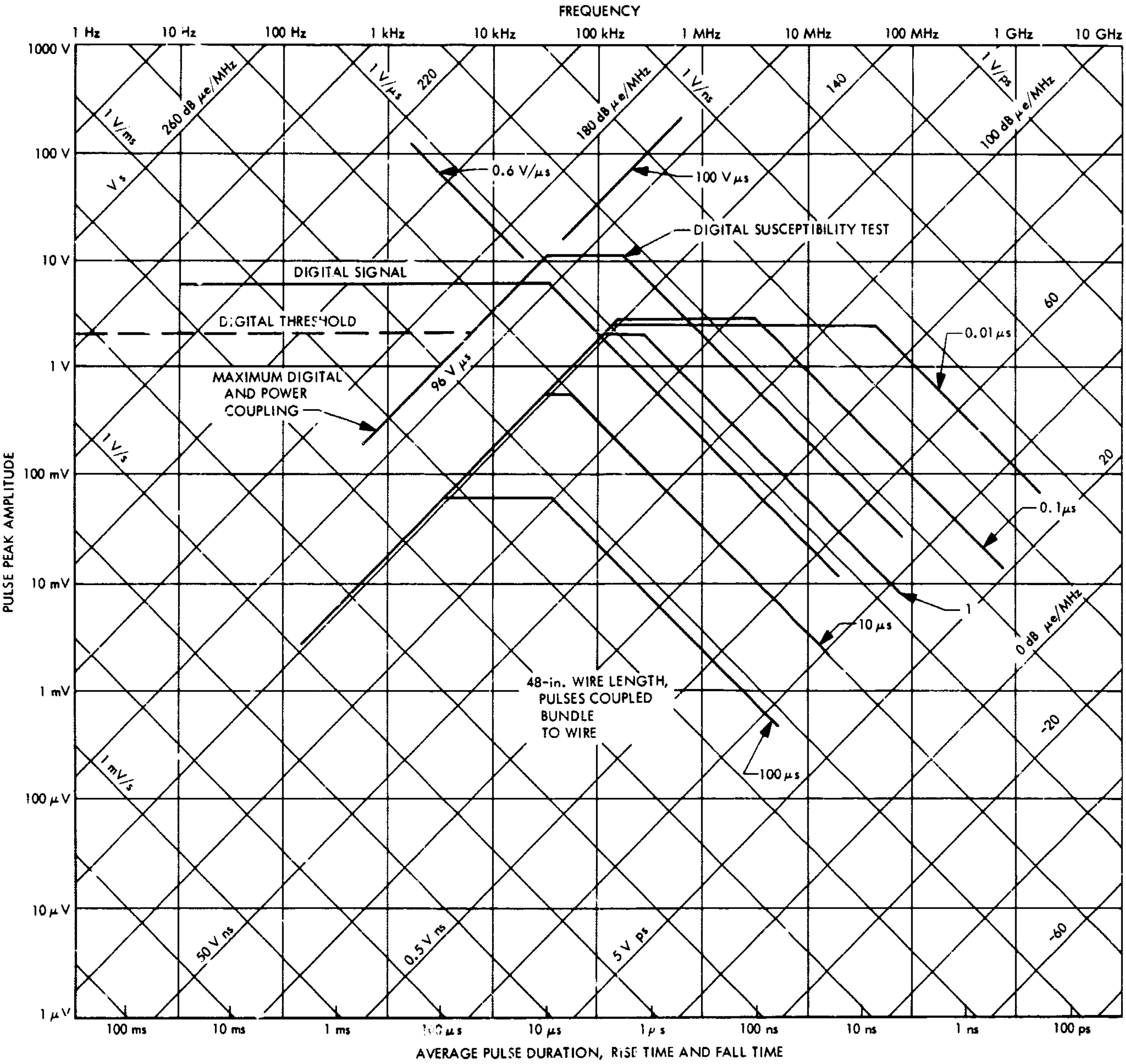

Fig. 9. Digital system conducted generation and susceptibility requirements

was written, and this guess was 387 W. The CW voltage is shown here as a representative ratio (the CW limit for the spacecraft being 0.5 V).

The digital system conducted generation and susceptibility requirements are shown in Fig. 9. The susceptibility requirement was an 11-V pulse from a 5-kΩ source with an area of 100 V-μs and a rise time of 2 μs or less. The digital signal rate of rise was limited to 0.6 V/μs. The curves to the lower right represent experimental results of interference that could be coupled into a digital signal wire if all the other wires in the bundle were driven with a 6-V interfering signal with the indicated rise time. It can be seen that all of the curves for allowable rise times (10 s or greater) lie entirely under the susceptibility curve with greater than 20 dB margin. When the contribution of the worst-case power line interference is added to the digital interference, an interference pulse area maximum of 96 V-μs

Table 1. Distribution of allowable system interference to components

Component	Interference	
	Power, W	Voltage, V (CW)
Command decoder	<10	0.013
TWTA	52	0.063
High-gain antenna	<10	0.013
Transponder	17.0	0.022
Signal conditioner	<10	0.013
Multiplexer encoder	<10	0.013
Radiation dosage	<10	0.013
Photo subsystem	80.5	0.105
Flight control electronics	28.3	0.037
Inertial reference unit	25.8	0.034
Canopus sensor	<10	0.013
Velocity control heater	<10	0.013
Subtotal	273.6	0.352
Power subsystem	232.3	0.3
Total	505.9	0.652

is obtained. This level is below the 100-V-μs susceptibility limit. Very little margin is applied to the power line case because of the automatic margin provided by distributing the total power line limit on the basis of input power. These requirements were not difficult for the designer to satisfy because of the low digital information rates. The maximum command rate of the programmer was 10 commands/s, the telemetry bit rate was 50 bits/s, and the command bit rate was 20 bits/s. Digital compatibility could, therefore, be established without the use of shielding. This resulted in a weight savings of approximately 20 lb in the spacecraft.

III. Interference Testing

Radiated generation testing was very similar to MIL-STD-826-type testing. Radiated susceptibility testing utilized the strip line technique up to a frequency of 30 MHz. Fig. 10 shows the strip line construction. If the upper conductor is ½ m above the lower conductor and if ½ V is used to drive the line, a field of 1 V/m is produced between the conductors. Unlike other specifications, this specification required a broadband radiated susceptibility test. For this test, the strip line or dipole antennas were used in conjunction with a 2000-V impulse generator.

Power line conducted interference testing was done with an oscilloscope exclusively; thus power line interference requirements and the data were all in the time

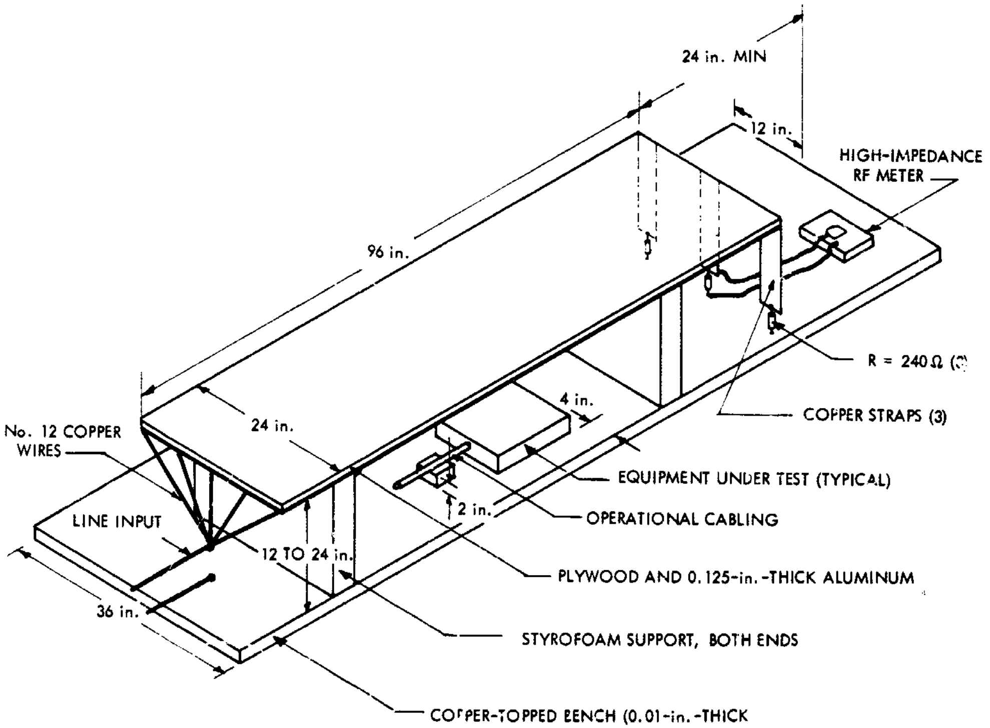

Fig. 10. Radiated susceptibility test setup

domain. Transient detectors were used during programmer and spacecraft testing. The line stabilization networks simulated the actual power subsystem internal impedance. Digital line conducted generation and susceptibility utilized time domain testing also.

Spacecraft testing was automated by allowing the spacecraft programmer to cycle the spacecraft through its operating modes. Conducted susceptibility testing was not performed at spacecraft level. A comparison was made between spacecraft conducted generation and component susceptibility data to determine the safety margin. Live ordnance was used during radiated susceptibility testing; squib firing lines were not shielded, and squibs were 1 A, no fire. The spacecraft had no Class A ordnance.

IV. *Lunar Orbiter* EMC Problems

The EMC problems encountered on the *Lunar Orbiter* program can be stated simply as "unstable emitter followers," since the two problems we had were both of this type. Figure 11 is the simplified circuit diagram that typifies this type of circuit. The 56-μH, 0.5-μF type L interference filter in the 28-V power return line becomes the emitter impedance. This happens to be resonant at the frequency where the phase angle of the Q2, Q3, Darlington pair amplifier is just right to produce oscillation. This circuit is unstable only during the transition region in going from *on* to *off* or *off* to *on*. It is amplitude-stabilized by the diode in the emitter of Q1, so that the RF signal across the filter is 6 V at approximately 35 kHz. The fix for this circuit was the addition of a 5.25-μF capacitor across the filter capacitor. This lowered the resonant frequency of the filter and thus reduced the phase shift through the amplifier so that the conditions for oscillation were no longer present.

V. Conclusions

The basic *Lunar Orbiter* electromagnetic compatibility philosophy was to:

(1) Determine the equipment operating environment.

(2) From the operating environment, determine realistic design and test requirements.

(3) Transfer the design and test requirements to designer language.

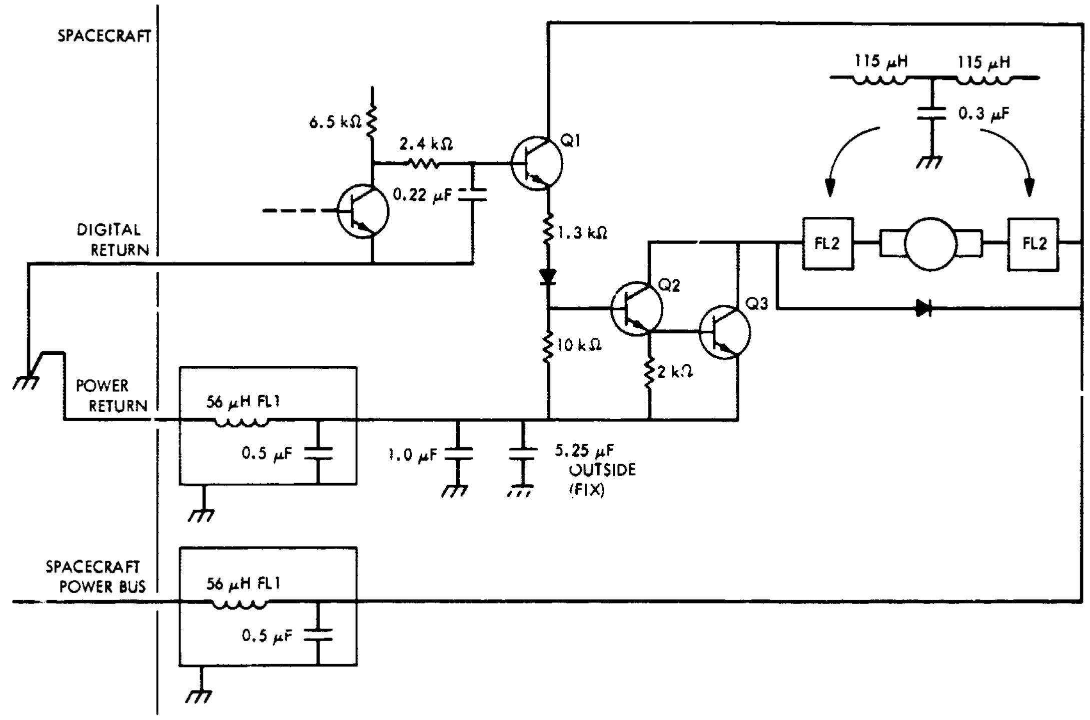

Fig. 11. Unstable emitter follower

This philosophy was very effective because it not only generated good designs but good data, which made it very easy to determine the best course of action in case of trouble. The weight savings and the cost savings that resulted were welcome bonuses to this "common sense" approach.

Discussion

Robert O. Lewis, Jr.: In Fig. 5, the sources at the right edge of the graph represent the levels for unspecified frequencies which are classified.

I noticed that some of the other people have been using an oscilloscope with a 20-MHz bandwidth for power line conducted interference measurements. All of our measurements were made with an oscilloscope with a 5-MHz bandwidth. We found that if we establish 5 MHz, we have a much greater range of plug-in heads that we can use that have a greater sensitivity. That was the only reason for not having a wider bandwidth.

In Mr. Wilbur's paper[1] there are figures that are typical of the type of interference that is caused by unstable emitter followers. During the transition region it oscillates and as soon as you are past the transition region it stops. So you obtain RF bursts which are characteristic when you are looking at a power line. If you get these RF bursts, it's probably due to this type of circuit.

Lawrence C. Montgomery: I have two points that I would like to ask about. One of them is why you went from an RF-transparent shroud to an RF-opaque shroud. Second, what was your margin of safety on the critical squib items?

Robert O. Lewis, Jr.: Our margin of safety on the critical squib items was estimated at about 30 dB or more, although we could never get a field intensity high enough to fire one. So we were limited; we couldn't go any higher than that. We used an RF-opaque shroud because an RF-transparent shroud exploded. There was a quick redesign of shrouds on another program. Since then, they have not used the honeycomb fiberglass shroud but have gone to the solid shroud.

John P. Quitter: Do you have any experimental evidence of booster corona at spacecraft separation?

Robert O. Lewis, Jr.: No, I don't. I have been led to believe that there is, and therefore we designed for it. Having designed for it, it didn't happen.

John P. Quitter: It didn't happen to us either, so I wondered.

Robert O. Lewis, Jr.: I understand there have been measurements made, and I expect some papers, today or perhaps tomorrow, that may go into that.

Guy L. Ottinger: What was your rationale for arriving at the 100 V-μs susceptibility criteria for your digital circuits? I believe you said that they operated at 6 V and you tested them at 10 V or something like that. A second point: you mentioned the safety margins for the pyrotechnics. How about the safety margin in all of your various critical circuits? Did you demonstrate this or was this just done analytically?

Robert O. Lewis, Jr.: I'll take the second question first. The safety margin in our critical circuits was probably on the order of 40 to 50 dB. The most critical circuit that we had was supposed to be the squib-firing circuit and it was tested to be not susceptible to 60 V of continuous CW over a very wide frequency range. We never approached any amplitude like that in the CW region. The highest spike that was ever measured on the bus was 33 V, and that was measured with a transient detector with a 50-ns capability. This took place at the time we turned on a Consolidated Electronics Corporation (CEC) oscillograph that was connected to the spacecraft bus—it wasn't due to the spacecraft itself.

Guy L. Ottinger: You didn't answer my question. How did you determine or demonstrate that you did have a safety margin in your critical circuits? You mentioned that you did measure a 33 V transient. Did you inject 66 V into the circuits or did you just determine analytically that that did not bother you?

Robert O. Lewis, Jr.: We immersed the spacecraft in a 44-V/m field wih live ordnance aboard.

Guy L. Ottinger: That would take care of the radiated field. You didn't actually worry about the conducted except as it was induced by the radiated field, I presume.

Robert O. Lewis, Jr.: We did not make conducted susceptibility measurements at the spacecraft level. We measured what was on the spacecraft bus and compared that with the component susceptibility data.

Guy L. Ottinger: The other question was, how did you arrive at your 100-V-μs susceptibility criteria, or test criteria for your digital circuits?

Robert O. Lewis, Jr.: By a great deal of work. It was really the result of several iterations of going to designers and asking "What can you give me?" and then going back and calculating what we needed. We finally arrived at that as a compromise.

Hector M. Smith: I have a question I believe can be answered better by NASA. Is there any manual or is there one planned, showing the different transmitter frequencies, powers, and possibly also modulation and antenna patterns of all these commercial, industrial, and military transmitters that will be at the different sites and different environments that spacecraft will see?

Robert O. Lewis, Jr.: At AFETR there is a published range facilities instrumentation document.[2] That is where we got all of our information. The document is thick and takes several weeks to go through.

Hector M. Smith: Where is this available?

Robert O. Lewis, Jr.: It's available at the Boeing library; where else, I don't know. I would think you could write to the range frequency controller, and he should be able to supply a copy of it.

---

[1] "*Surveyor* Spacecraft," by Donald Wilbur, in these *Proceedings*.

[2] *AFETR Instrumentation Handbook*, ETR-TR-65-9. Air Force Eastern Test Range, Cape Kennedy, Fla., June 1962.

N69-25433

Surveyor Ground Equipment

George N. Burkhard
Hughes Aircraft Company
El Segundo, California

I. Introduction

This paper presents solutions to basic engineering problems using EMI detection and correction techniques. I have not been involved directly with EMC per se for quite a number of years. However, I will present some of the engineering problems encountered on the *Surveyor* ground equipment and their pragmatic solution.

The command and data handling console or system, which we refer to as the CDC, that was used on the *Surveyor* program consisted of three large data control and display consoles, eight cabinet racks, a system tester which consisted of three individual racks, a station operation chief console (SOC), and an on-line data processor which consisted of the SDS 930 computer system, input-output devices and peripheral and interface equipment. The first engineering prototype was in operation in May 1962. Four new CDCs were fabricated in mid-1965 under a most vigorous schedule to provide tracking and operational capabilities at Madrid, Spain; Ascension Island; and AFETR, Cape Kennedy. During the period from 1962 to 1967, over 500 additional engineering changes were incorporated into the system as retrofit field modifications.

II. Discussion of Problems

Initially, the system was designed, off-the-shelf hardware was procured, and standard equipment racks were supplied by the customer.

Evaluation of the equipment racks supplied revealed the following problems which severely detracted from the racks' normal bonding and shielding effectiveness:

(1) Each individual and removable rack component such as doors, side panels, and equipment mounting structures was dip-painted prior to assembly.

(2) Special nylon washers were used to prevent damaging the exterior painted surfaces at all points of attachment to the main rack frame.

(3) The hinges, blank panels, and door locking mechanism were installed after their respective mounting surfaces were painted.

Consequently, continuity between the indicated rack components was nonexistent, and the subsequent costly rework consisted of the following:

(1) Side panels were removed and were spot-faced to bare metal at all points of attachment to the main frame, the nylon washers were replaced with internal tooth lock washers, and each point was properly treated to preclude corrosion.

(2) Door panels were bonded across the hinges with wide flexible copper bonding stops installed in the same manner as outlined in (1) above to achieve direct metal-to-metal contact.

(3) Equipment mounting structures were stripped of all paint, again using the spot-facing techniques at the points of attachment to the main frame, and all front panel attaching holes were required to be retapped to clear them of paint.

(4) Matching painted equipment front panels required the installation of special rosette-type captive mounting screws to effect their bonded interface with the mounting structure.

(5) Ground studs were installed in each rack, again using the spot-facing technique.

(6) Heavy-duty line filters and special input/output isolation caps were coupled to flexible conduits.

(7) All removable panels contained conventional rubber sealing gaskets. These were replaced with approved EMI-type bonding and moisture-deterrent material.

(8) Cooling louvers were covered with No. 22 mesh copper screen bonded directly to the attaching point. The changes indicated above brought the racks within the minimum usable configuration.

However, I want to point out that these systems experiencing malfunctions had been in operation for several years and had been subjected to numerous test cycles, used to support the spacecraft throughout its subsystem and system test phases, and used to train the operational personnel at the overseas tracking facilities.

Similarly, one or more successful missions had been conducted using these systems and the problems to be discussed shortly had not been exhibited. However, in virtually all cases selected for discussion within this paper, (and as is generally the case) each problem occurred during critical prelaunch test phases.

The first problem to be presented came off the teletype line entitled: "Inhibit erroneous command transmission when the repeat button is depressed."

Using EMI techniques—a small loop probe and a noise generator—the main unit encoder was evaluated (basically, a noise susceptibility test was conducted). In very short order, a point was located where noise pulses would cause the command generator to transmit commands differing greatly in number from the desired command transmission. Incidentally, evaluation of the unit's logic indicated that to be an impossible operational mode. However, it was now a simple matter to evaluate the circuit interface between the repeat button and this main encoder flip-flop (F-F). Final analysis revealed that the repeat button was buffered and subsequently would not induce switch transients into the main encoder. However, the buffer was remotely located and the switch wiring en route to the buffer interfaced with this main encoder F-F as a distribution point. Further, this distribution point was adjacent to the F-F's ac and dc inputs.

The F-F was electrically and mechanically symmetrical; consequently, the two input circuits were side by side. Moreover, the dc inputs were not used and were left open-circuited, providing ideal high-impedance noise-susceptible points throughout the main encoder.

An analysis was then performed to determine what corrective action could best be taken to preclude subsequent malfunction due to noise injected at these points in the unit. It was concluded that simply grounding all the dc inputs on critical main encoder F-Fs would resolve the problem and preclude any slips in the launch schedule. Postlaunch engineering as a field modification required all unused F-F inputs to be grounded. This problem was one of the most critical anomalies prior to the *Surveyor III* flight.

Additional problems encountered on this project which were classified as mission critical were rapidly duplicated and resolved by using EMI evaluation techniques. In one case to be discussed shortly, the equipment fault virtually defied detection using conventional engineering approaches.

The second problem was a tape reader noise susceptibility problem. A Micro-Electronics improved version of a tape reader automatically read the commands into the *Surveyor* system. The tape reader was delivered just prior to the mission B5 readiness test. After it was installed, the critical trouble/failure report read "During the B5 test, tape reader failed 15 times while transmitting commands. Note, tape reader never has operated properly since installation." The corrective engineering to reduce the tape reader's susceptibility to noise required the following changes to be incorporated into all CDC System Test Equipment Assembly (STEA) units:

(1) All track output lines shall be shielded and grounded at the reader by installing a No. 16 AWG wire from shields to the common shield point TB18.

(2) All ac distribution circuits within the reader shall be twisted pairs, No. 16 AWG wire. Examples are leads to the time meters, drive motors, power transformers, etc.

(3) Printed circuit ground bus impedance on the integrated amplifier board shall be reduced by adding to the four available holes in the printed circuit lead and the ground test point on the card wires to the system ground point.

(4) The reader input control lines, step forward, step reverse shall be shielded; the shields tied together with No. 16 wire to common shield point TB18.

(5) A 0.1-μF, 10-V-minimum capacitor shall be added between the load signal line and dc return.

(6) The interconnecting cable between the reader and the spooler shall be reworked.

These problems could have been resolved during design phase had the EMC people cognizant of the requirements to suppress noise in the system been consulted prior to procurement.

The third problem is noise suppression for the reader-punch tape switching unit. This came through as an engineering change request (ECR) from the field, which simply stated that when one was selecting tape readers, tape punches, or typewriter configurations from the input-output selection unit or the RPT switching unit, the command printer printed out. Again using radio frequency interference (RFI) techniques to solve the problem, but without being RFI people, we added capacitor suppression devices on all switches utilized to switch *on line-off line* hardware at the input-output selection unit.

Finally, and what I want to deal with primarily here, is the solution of a problem in bringing the bit error rates (BER) down within the *Surveyor* system design specification limit. A description of this problem, taken from one of the many technical reports reviewed, said, on April 6, 1965, it was surmised that (after lengthy conventional system tests and evaluation) the abrupt deterioration in the CDC bit error rate performance was due to unexplained phenomena.

Approximately two years later during a discussion with CDC personnel cognizant of the problem, and still confronted with the requirements to resolve it, we requested them to provide a system for evaluation by EMI personnel, in an EMI environment, using EMI techniques. A hybrid, eleventh-generation system was provided, making it mandatory that the fix be located at the source to insure that incorporation of the fix in systems already delivered and modified or field-repaired would respond in a manner similar to our test model. Subsequently, a test plan was prepared outlining the following objectives:

(1) To define the point in the pulse code modulation (PCM) telemetry link most susceptible to conducted transient noise pulses.

(2) To correlate the susceptibility test data with bit error rate problems being experienced at CDC field installations.

(3) To design and demonstrate simple engineering solutions for the discrepancies uncovered in these tests.

Figure 1 shows a block diagram of the basic instrumentation monitoring system used during these tests. The CDC's PCM signal generator and SCO were used with a special noise signal generator mixer developed by the Santa Barbara Research Center. Basically, we were simulating what the spacecraft would normally transmit to the CDC in PCM data and mixing it with noise, threshold levels of 12 dB, 10 dB, and 9 dB, etc., and monitoring the number of errors we obtained. In conjunction with this, a crude probe was fabricated from a piece of coax cable with a loop in the end. Various CDC racks were probed until the normal system bit error rate increased.

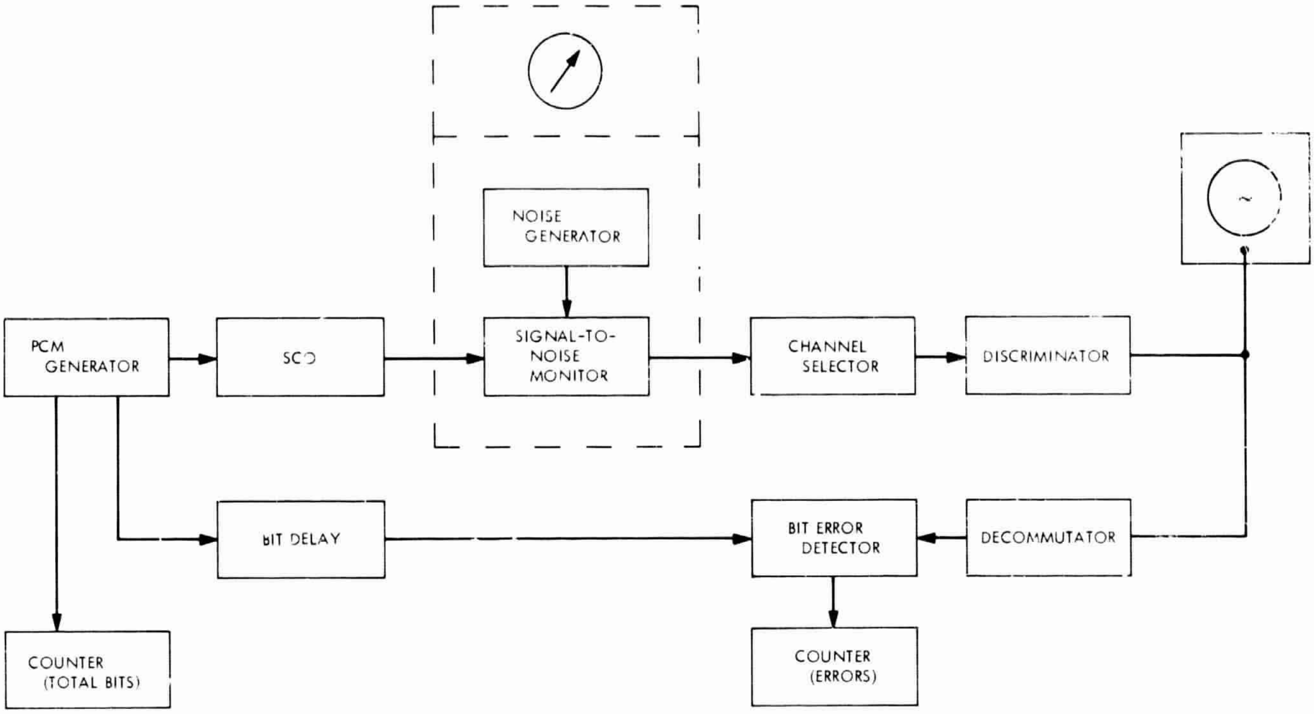

Fig. 1. PCM telemetry BER circuit

It was determined that the digital decommutator PCM input to the system was susceptible to this type of noise. Removing the unit, which basically takes the analog form it from the SCO and reconstructs it to PCM non-return-to-zero, and examining the drawer more closely, it was determined that the bit error rate could be controlled at will as a function of the injected noise amplitude.

Next, a Stoddard clamp-on current loop probe was fed from a Hewlett-Packard function generator through a normal piece of coax to inject pulses into the cable shown in Fig. 2. The pulse width and the pulse repetition rate were varied, while monitoring the bit error rate on the oscilloscope to determine that frequency and that pulse width to which the system was most susceptible. At this point our problem was basically nailed down. Separating the cable and examining it with the loop probe, wire by wire, it was found that the ground wire associated with the PCM input drawer to the power supply created a greater increase in BER than any other wire in the harness. The pulse waveform used throughout this test is shown in Fig. 3, in which the amplitude scale = 50 V/cm; the time scale = $1 \mu s/cm$; $t = 6 \mu s$ (variable from 2μ to $10 \mu s$); and the pulse repetition rate = 5000 pulses/s.

Fig. 2. CDC-11, Bay 6, current probe clamped around cable terminated by connector 12J2

Figure 4 shows the original circuit configuration. The PCM amplifier card with pin Z came down to the long braided strap, which was conventional braided shield that had been flattened and filed with solder and run down the extremities of the unit. From there, a No. 22 wire went through the 12J2 connector pin 92, down to connector 14J2, pin 88, and into a ground lug E3. The only interface between ground lug E3 and the rack frame ground was through the drawer slides. So, in effect, a positive ground did not exist. Locating this, it was decided to determine if this was the problem. Adding the clip lead, shown in Fig. 5, the results were that the bit error rate decreased a small amount. We were convinced then that the basic problem was a high-impedance ground associated with the PCM input card. The ground system was completely modified by removing all the ground wires in the cable. A bonding strap was added from the PCM amplifier card directly to the drawer chassis as shown in Fig. 6.

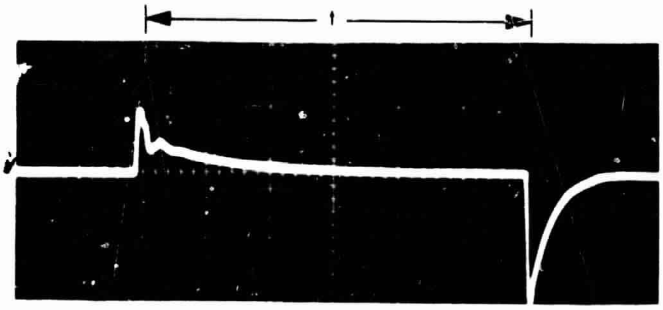

Fig. 3. Test pulse waveform

Similarly, a bonding strap was routed from the PCM input drawer to the power supply drawer. This was accomplished by installing ¼-in. ground studs in the rear of each unit and interconnecting them with a No. 6 AWG Belden wire cable. Belden wire cable is preferred to other vendor types because of its extreme flexibility, permitting the units to be slid in and out of the rack on their slides as well as allowing them to be rotated on the slide pivot to effect maintenance. The No. 6

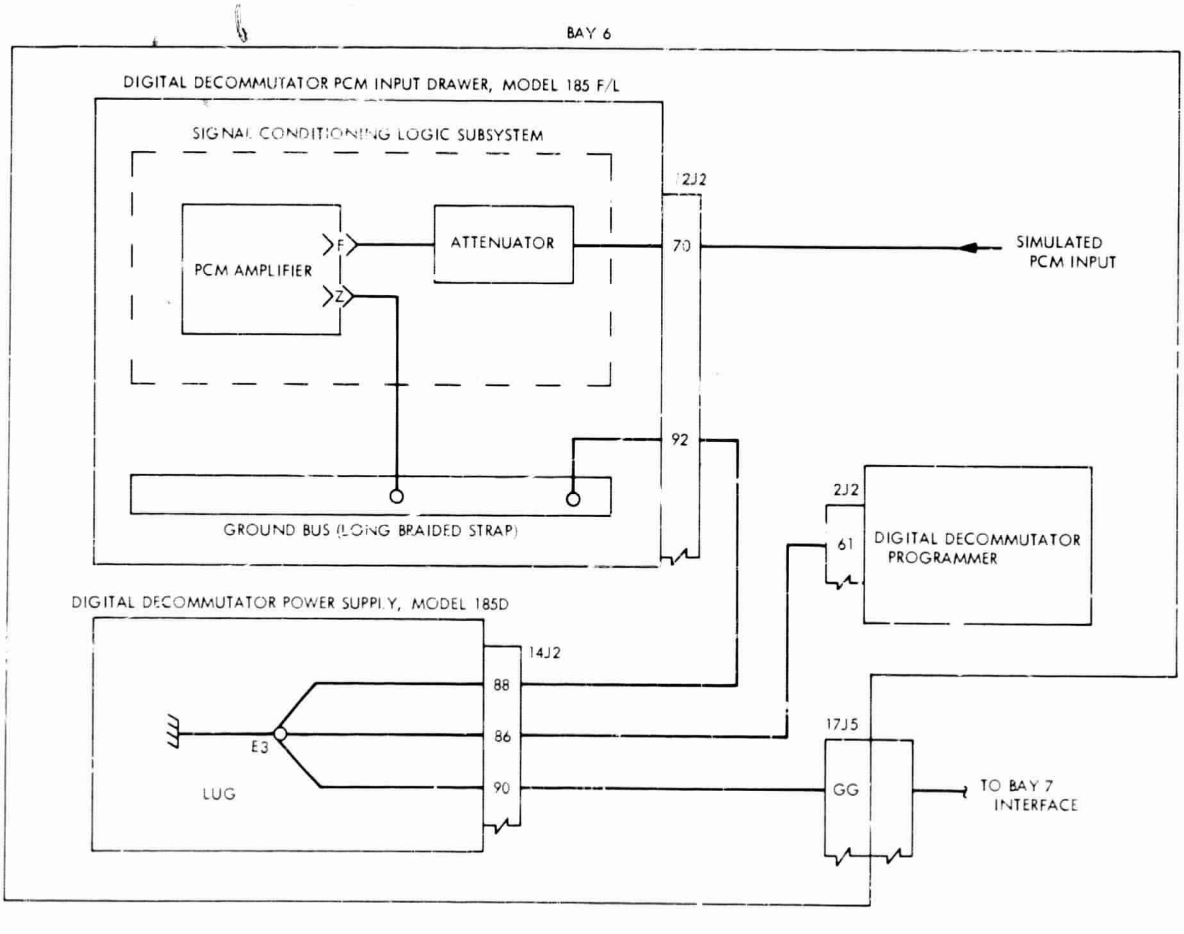

Fig. 4. Original circuit configuration of PCM input drawer

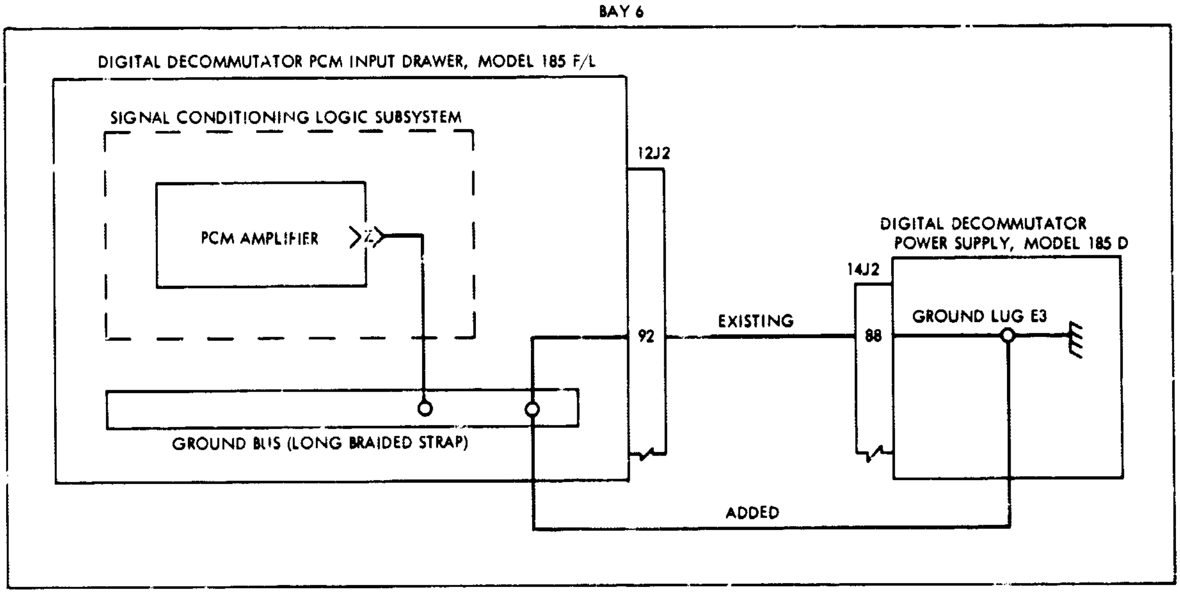

Fig. 5. Circuit modified to show excessive ground circuit impedance

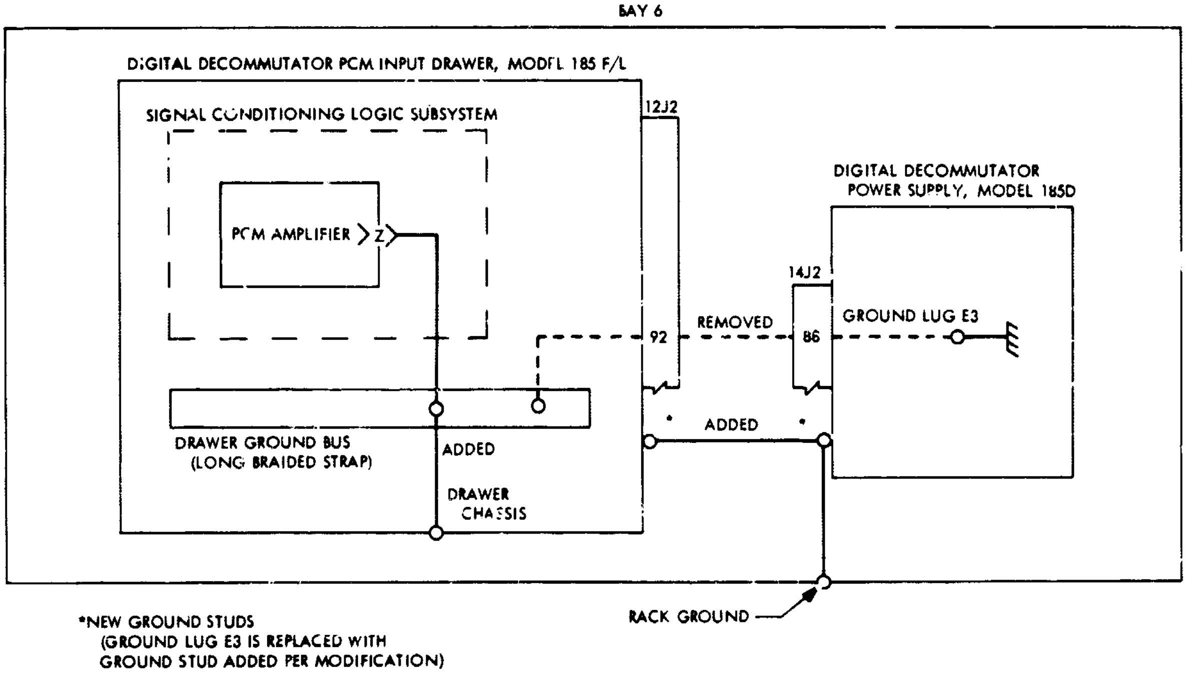

Fig. 6. Completely modified system

attaching lugs at each end of the cable were installed using the dip solder technique.

Resuming operation with the modification installed, the bit error rate was observed to have been significantly reduced. Additional tests were performed to determine the effectiveness of the fix at the other system bit rate. Figure 7 shows that with this fix installed in the system and with the same level of noise being injected, we had localized the problem. These two curves show that with the bit error rate at 17.2 bits/s, with no pulse injected, and with the pulse injected, the distribution was virtually undetectable and the bit error rate was below the design specification limit of 3×10^{-3} bits/s.

Figure 8 shows the same thing at the next bit error rate, which was 137.5 bits/s. It again shows that it doesn't make much difference what bit error rate we operate with. With this modification in the system, there exists very little BER deviation. Figure 9 shows

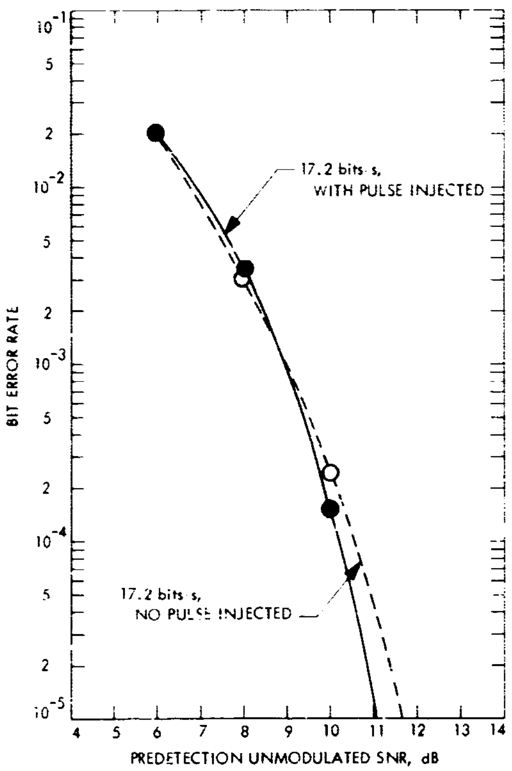

Fig. 7. Bit error rate probability curve at 17.2 bits/s after circuit modification

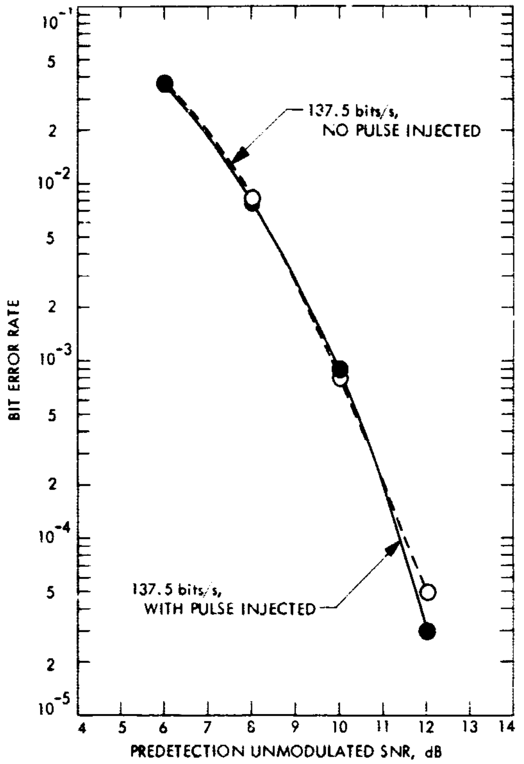

Fig. 8. Bit error rate probability curve at 137.5 bits/s after circuit modification

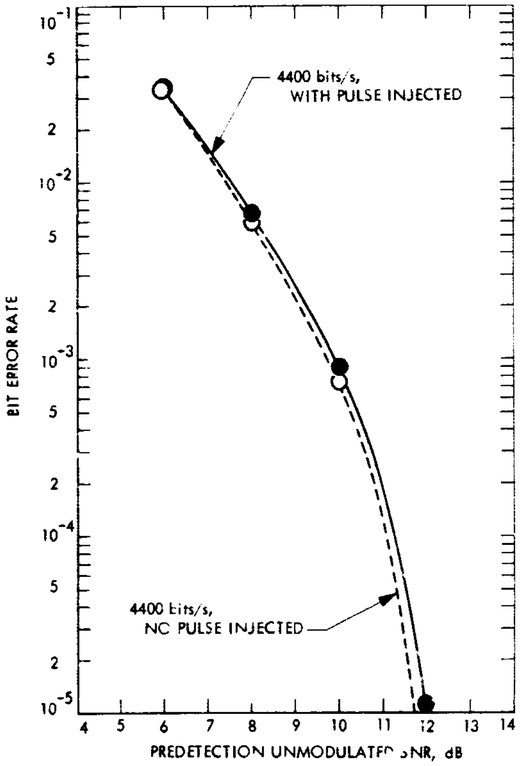

Fig. 9. Bit error rate probability curve at 4400 bits/s after circuit modification

the 4400-bits/s rate still injecting the same signal at the same critical points in the system. The system retains the curve, which is between a normalized frequency shift keying (FSK) system and an upper limit of that same distribution.

Table 1 contains the only data that presented in logical fashion the effect of modification on bit error rate. The specification requirement was 3 × 10^{-3} bits/s. Data at other signal-to-noise ratios were comparable.

Table 2 shows the actual test data recordings made after modification at various bit rates. Observe particularly the bit error rate in the last column; it was duplicated when the modification was installed in the field.

The manner in which we effected control was by being responsible for the actual engineering. The basic change action plan specified: "(a) remove the existing ground wire connected to the PCM input drawer ground bus through connector 12J2, Pin 92 and 14J2, pin 88 to the power supply ground lug E3. (b) Install a short beryllium copper bonding strap from the PCM amplifier ground bus directly to the chassis. This bonding strap shall be one-half inch wide and not exceed one inch in length. (c) Install ¼ or ⅜ inch ground studs centered at the rear of the PCM input drawer and power supply drawer. Spot face both sides of the rear panels to bare metal over a diameter of at least ¾ inch. Install internal tooth lock washers on both sides of the rear panels, bearing on the spot faced area. Attach and secure the nuts and torque to at least 30 inch-pounds. (d) Attach a heavy, number 6 AWG flexible ground strip to the reference ground studs. Lugs shall be dip soldered at each end of this cable. Internal tooth lock washers and nuts shall be utilized to attach the cable. Torque the nuts as specified in (c) above."

Table 1. Comparison of bit error rates for modified and unmodified systems

System	Bit rate, bps	SNR, dB	Bits × 10^3	External pulse generator on[a]	
				Errors	BER × 10^{-3}
Unmodified	4400	12	100[b]	97[b]	0.97
Modified	4400	12	100[c]	1[c]	0.01

[a] External pulse generator output amplitude set at 100%; pulse width = 5μs; PRF = 5 kpulses/s. Current probe clamped around cable 12J2 (ground lead from pin 92 to E3 not in cable).

[b] Data taken with long ground lead from 12J2, pin 92, to power supply stud E3 (ground lead isolated from all other cables and wires).

[c] Data taken with short ground lead connected directly from the drawer ground bus to the rack.

If you find the problem and define it don't leave its solution to conventional engineering personnel—do your own engineering. Follow it all the way, nail it down, specify the requirements, and fight for them if you have to. The problems that we ran into were conventional and had pragmatic solutions, but, in each case, each problem was handled all the way in keeping with the established operating engineering procedures.

III. Conclusion

Early involvement of EMI personnel reduces program costs by realistically establishing the EMI performance, design, and test requirements. Similarly, this technique ensures that these requirements are compatible with the overall program objectives prior to hardware fabrication. EMI test and evaluation techniques

Table 2. Bit error rate as a function of bit rate and signal-to-noise ratio

Actual SCO center frequency kHz	Bit rate, bits/s	SNR (actual), dB	Bits × 10^3	External pulse generator off		External pulse generator on	
				Errors	BER × 10^{-3}	Errors	BER × 10^{-3}
32.994	4400	6	100	3292	32.92	3377	33.77
		8		597	5.97	674	6.74
		10		75	0.75	91	0.91
		12		0	—	1	0.01
7.353	1100	6	100	3742	37.42	3910	39.10
		8		819	8.19	896	8.96
		10		63	0.63	140	1.40
		12		4	0.04	10	0.10
3.904	550	6	100	3351	33.51	3187	31.87
		8		683	6.83	639	6.39
		10		53	0.53	90	0.90
		12		1	0.01	9	0.09
0.9600	137.5	6	100	3659	36.59	3651	36.51
		8		831	8.31	779	7.79
		10		79	0.79	88	0.88
		12		5	0.05	3	0.03
0.5600	17.2	6	10	193	19.30	195	19.50
		8	10	30	3.00	34	3.40
		10	20	5	0.25	3	0.15

NOTE: External pulse generator output amplitude set at 100%; pulse width = 5μs; PRF = 5 kpulses/s.

Removed ground wire from 12J2, pin 92, to power supply 185 D, ground stud E3. Substituted a short ground jumper from the digital decommutator PCM input drawer ground bus directly to the Bay 6 rack.

Current probe clamped around cable 12J2 (ground wire from 12J2, pin 92, to E3 removed).

will provide rapid insight into noise problems that general engineering testing cannot resolve at a comparable cost.

EMI engineering, to be effective and economical, must be integrated into the project in a manner similar to quality control and the reliability function. The conventional subordinate or disjoint concept implemented by management limits the EMI engineer's participation to the implementation of costly and less effective brute force after-the-fact suppression techniques in lieu of good EMI design approaches.

Discussion

Paul P. Monroe: Mr. Burkhardt, if I had heard your story from someone else, I wouldn't have believed it. How is it possible to design equipment, check out equipment, deliver it to DD-250, and have all these discrepancies?

George N. Burkhardt: The only answer that I can give you is that, to me, EMC is not unique. Every time I see an EMC problem, I see a basic engineering oversight.

Paul P. Monroe: Well, let me put it this way. An object of engineering is to consider a problem thoroughly, then put it on a drawing board, then breadboard it, and finally put it into production. By the time you have it in production, you should have eliminated all these problems. I have designed checkout equipment for Lockheed, North American, Hughes, for your own firm, and I have never experienced anything of that sort; that's why I'm astonished.

George N. Burkhardt: I think there's a big philosophical change that's happening in equipment fabrication. It's becoming very, very costly to sit down and design in-house equipment, other than unique equipment. You will find, on a majority of space programs today, that the ground equipment, at least, is off the shelf. It's from a conventional manufacturer. Look at your recorders, your signal generators, your SCOs, etc. You can put specifications on these contactors 'til you're blue in the face. The contractor can't deliver, because he doesn't have the capability, he doesn't have RFI test people, he has to go outside. Your program will not stand the tremendous delays and the tremendous costs involved in dealing with this type of a contractor.

Paul P. Monroe: Then how do you sell it off to your customer before you put it into service? Does the contractor buy off the equipment? You have to deal with DD-250 on equipment, do you not?

George N. Burkhardt: Yes, unfortunately, the contractor that accepts these equipments and puts them into a system assumes the liability of delivering that system in an operating condition

Paul P. Monroe: Well, I don't want to go any further into this subject but I'm really surprised.

George N. Burkhardt: I don't know; I think it's pretty current state of the art. Do any of the other gentlemen here have any problems?

Paul P. Monroe: I cannot agree with that.

George N. Burkhardt: I think if you will look in the aerospace ground equipments and the equipments that are being used on the larger programs, and the tremendous time schedules that we are required to work under, you will find that we can't develop a piece of equipment for a particular item from the drawing board to installation. Only in limited cases.

Robert W. Ellison: I'd like to support Mr. Burkhardt's concern with commercial off-the-shelf equipment being stuck into racks. It appears that what you run into when you question whether the assembly is going to be bonded from drawer to rack, and so forth, is that the equipment worked on program X. Well, it turns out program X didn't have digital equipment that was very susceptible in the same rack.

George N. Burkhardt: This is true. I think that had we been able to get into the project very early and look at the individual equipments, we probably couldn't have stopped them from buying them anyway; but at least we could have designed some interim fixes that would have reduced the problem areas to a minimum. As it is now, if you find an equipment that is an offender, such as some of the recorders that exist that use 30-kHz start pulses, you start it during a nonoperational period and leave it on. It is never turned off and never started during the operation. So there's more than one way to do it.

D. T. Frankos: You came up with a unique waveform in terms of the susceptibility probing that you did. I'm curious—you didn't mention whether you were looking for other possibilities like CW or broadband noise. How did you zero in on this particular waveform?

George N. Burkhardt: Let me say, this was strictly a do-or-die problem solution. We weren't looking for anything but the source of the problem and a good engineering fix. That wave shape, incidentally, is what happens to a conventional square wave out of a Hewlett-Packard function generator when you hang a Stoddard loop probe on the bottom. The negative pulse was predominant and it just so happened that the f_0 timing pulse, which this was feeding back into, happened to be negative, and it was passing right through the gate. If we'd had just a positive pulse, probably we wouldn't have ever seen our problem.

PRECEDING PAGE BLANK NOT FILMED.

N69-25434

Integration of a VHF/UHF Dual-Channel Receiver on Board the *Mariner V* Spacecraft

Louis H. Keeler
Jet Propulsion Laboratory
Pasadena, California

I. Introduction

My talk is about some of the tasks involved in integrating or incorporating a dual frequency receiver (DFR) on board the *Mariner* Venus 67 spacecraft. This spacecraft was a modification of the previously adequately qualified *Mariner IV* design. The experiment added to this spacecraft was one of the few changes to the spacecraft and, as such, we looked at it with special care to determine that there would be compatibility once that item was installed on the spacecraft.

Briefly, the experiment consists of transmission of two modulated, coherent carriers from the ground at 49.8 and 423 MHz and the reception of these signals by the receiver on the spacecraft. From the relative phase of the received carriers and their sidebands, it is possible to determine the electron density in space. This experiment is based on the fact that the phase of the radio wave in passing through an ionized medium will be advanced by an amount proportional to the electron density and inversely proportional to the square of the frequency. The DFR was designed to measure the relative phase of the modulated envelopes of the two carrier frequencies, and since the high frequency is relatively unaffected by the ionization, this will provide a value for the integrated electron density. In addition, the rate of change of phase of one carrier with respect to the other was measured. This information was telemetered back to the earth through the telecommunications subsystem.

II. Nature of the Incompatibility Problem

The sensitivity of the DFR at threshold was approximately −129 dBmW for the 49.8-MHz channel and −136.2 dBmW for the higher 423.3-MHz channel. The corresponding noise figures are 3 dB at VHF and 7 dB at UHF. Because interference is a distinct possibility for any receiver on board the spacecraft, we were especially concerned with this experiment. In addition, we were concerned about the two frequencies that are radiated from earth to the spacecraft. It so happens that the 5th harmonic of the UHF frequency fell very close to the receiver frequency of the spacecraft, the S-Band transponder. The 49.8-MHz signal is very close to the first intermediate frequency of the S-Band transponder. Calculations showed that the power levels for the two signals would, in all probability, not interfere with the spacecraft; however, there was little information available on the harmonic content.

Subsequently, during the test program that followed our initial investigations, the harmonic of 423.3 MHz at

S-Band was measured from the transmitter located at Palo Alto. It was determined that the level was low enough and would not interfere with the S-Band receiver. Part of the analysis involved calculating possible intermodulation products that would interfere with the spacecraft transponder or with the DFR. Several potentially disruptive frequencies were determined using a simple computer program. A series of tests was initiated with the goal of obtaining as much information as possible about the DFR spacecraft incompatibility early in the program, to permit a maximum amount of time in solving the problems encountered.

III. EMI Test Program

One of the key tests early in the program was a bench compatibility test between the S-Band transponder and the DFR. The unit available for the DFR model was the *Pioneer* spacecraft receiver, and the S-Band transponder available at the time was an engineering model. This test was performed by placing the two units on a conducting plane and connecting the two receiver inputs directly through coaxial cables, using directional couplers and attenuators to inject the calibrating signals and to provide a controlled amount of isolation between the two units. We were able to determine some valuable information in this first test: we determined that the interaction of local oscillator harmonics was not apparent and that the intermodulation products, that we feared would bother us, did not occur. However, one unexpected problem did occur, and that was that the S-Band transmitter frequency could enter the UHF channel and in turn cause a generation of S-Band frequencies that would exit from the 423.3-MHz receiver and enter the S-Band receiver. These frequencies, in turn, would cause the phase lock loop to be jammed and be driven out of lock from its required signal. This was determined at the UHF receiver band; no such thing, though, was found at the 50-MHz band.

Based on the results of this test, some recommendations were made. The first was that RF filters be installed at the input to each DFR channel. This was a particularly desirable addition because the DFR did not have any preselecter filters. The second recommendation was that the antenna range perform coupling tests between each of the antennas on the spacecraft. These measurements subsequently were performed and it was determined that the coupling between the S-Band transmitter antenna and UHF antenna was marginal and the installation of the filters adequately provided isolation. The final filters selected were a low-pass filter for the UHF channel and a bandpass filter for the VHF channel.

Other tests were found necessary on the spacecraft; however, we did not always have the DFR to use for the tests. Therefore, test equipment was put together to perform the majority of the tests. We tried to get equipment that had a lower noise figure than the actual flight equipment. For the UHF channel, we started our tests with a receiver that had a noise figure of approximately 3 dB. Later, we replaced the unit with one having a 1-dB noise figure. The UHF channel had a noise figure of 2 dB in our test gear. This equipment consisted of commercially available, low noise preamplifier modules that were placed directly on the spacecraft to eliminate the possibilty of losses in the cabling. The amplified RF signals were then monitored at a remote location.

Three significant facts were learned from these early tests. One was that the ambient noise level in our test area, which was the Spacecraft Assembly Facility, was excessive for many of the measurements we had to make. In many cases, during regular working hours, the ambient level was much higher than the levels we were looking for. It also fluctuated quite a bit. We had to make measurements to determine which was the quietest time of the day for making test measurements. It was determined that the hours between 11 p.m. and 6 a.m. were least noisy, with the noise relatively low and fairly stable. Therefore we spent a few nights on these tests during those hours. It was determined that there were several spacecraft noise sources at 49.8 MHz. No noise sources were discovered at the higher frequency. At 49.8 MHz, we determined that the subsystem booster regulators of the power supply and the battery charger of the power subsystem did generate excessive noise for the DFR.

In many of these early tests, in which we had an incomplete spacecraft, we determined that the RF amplifier power supplies were also generating noise. Later on, in subsequent tests, when we had a fully assembled spacecraft, we did not see the noise from these power supplies. (On the other hand, these were also different power supplies.) Perhaps the additional shielding provided by a fully assembled spacecraft prevented the noise from coupling into the DFR.

A few words about the antennas of the DFR—for the lower frequency, the antennas used are two feed wires on two adjacent solar panels that are driven for the VHF channel. The UHF antenna is at the tip of one of the solar panels. It was apparent that the noise fed into the VHF channel was leaking through into the antennas. By performing a test with a direct connection to the DFR receiver, we never saw any noise in that channel. Apparently all the noise came in through the antennas and no noise was seen through the cabling. The noise generated by the power supply was eliminated following a suggestion made by the power subsystem people. They had become aware that there were faster diodes on the market that could be used in place of some of the ones used in the power regulators. These were replaced and the noise was indeed reduced substantially.

A separate problem, which we discovered in the tests with an incomplete spacecraft, was that the data automation system of the science system caused degradation of the DFR. This was done by a harmonic of the data automation system (DAS) master oscillator. The frequency of the master oscillator was 444.444 kHz. It turned out that the 112th harmonic was in the VHF band. In fact, it was within the 3-dB bandwidth of the VHF receiver. To reduce the interference from the DAS master oscillator, the obvious solution was to move the 112th harmonic out of the RF passband by changing the master oscillator frequency. However, the 3-dB RF bandwidth of the DFR is 45 kHz wide and harmonics of 55.555 kHz that were also generated in the DAS would be separated by no more than 5.3 kHz from the 3-dB points. It was therefore necessary to shift them just enough to straddle the passband of the DFR. Tests showed that reducing the frequency of the master oscillator by 1 kHz eliminated the major portion of the DFR interference and did not compromise the operation of the data automation system.

In an additional effort to reduce the level of these harmonics at each side of the passband, the cables were wrapped in a manner similar to that described by one of the previous speakers. In addition, ferrite beads were placed on the wires of the cable bundle that came out of the master oscillator. Apparently the noise was decreased somewhat, but no definite conclusions were reached on the magnitude. However, we were trying for reduction in any way possible and we thought that it was a good technique.

The noise that was found from the telecommunication system, as I have already said, did not show up later in the fully assembled spacecraft tests. However, some investigations were performed to determine methods of reducing the noise if it were necessary. After a sequence of tests was performed on the spacecraft, we still had to determine in a fully assembled test what degradation could be suffered by the DFR. Most of our tests up to date had been performed with the spacecraft sitting on a metal positioner on the ground, with the antennas tilted up toward the ceiling. Since the whole spacecraft formed part of the antenna, it was necessary to determine just what the degradation would be for a fully assembled spacecraft. A test was therefore set up in the assembly facility to try to determine what it would be for a spacecraft in that configuration: a spacecraft was assembled and suspended by nonconducting cables in the building.

During the course of our investigations, the principal investigator for the DFR experiment provided us with levels of maximum degradation that the DFR could suffer in space and still not compromise the mission. The levels permitted were 1 dB of degradation for the 423.3-MHz receiver and 3 dB for the 49.8-MHz receiver. One of the problems was to determine just what degradation would be suffered in space. Our test would be performed in a noisy earth environment; at least, an environment different from that of space. The method used was to make use of the fact that the noise power, assuming flat noise, can be expressed as kTB, where k is Boltzmann's constant, B is the bandwidth of the receiver over which the noise power is measured in hertz, and T is the temperature in degrees Kelvin. Since the receiver, either the test receiver or a DFR receiver, is the same one throughout the sequence of tests for any period of time, one can set up a ratio of known conditions versus unknown noise levels with that receiver. Our approach was to assemble the spacecraft, power the test receiver or the DFR remotely from a different power supply, and place a 50-ohm termination at the input of the receiver. We would determine how much of an indicator deflection would occur for this condition and then remove the 50-ohm termination and connect the spacecraft antenna. The ratio of the different readings could then be used to determine the effective noise temperature for various conditions of the spacecraft.

We first determined the ambient temperature with the spacecraft off. When we first began these tests, we determined that the background noise was excessive. One of the steps necessary was to turn off a computer that was in the next room. We turned off the operational support equipment that we did not have to use, because it was excessively noisy, and just left on the equipment that was necessary to monitor the spacecraft when it was turned on. By successively energizing different portions of the spacecraft, we were able to determine different effective antenna noise temperatures for each different mode that we could isolate. It wasn't always easy to isolate the modes because the spacecraft was not designed for this type of operation. For each mode that we could isolate, we could assign a level of effective noise temperature. Then by subtracting the already determined background noise temperature, we would have assigned levels of effective noise temperature for each different mode. We could then estimate the degradation that the DFR would suffer in space by substituting the test area background noise temperature with the estimated level of cosmic noise. This was done in a sequence of tests.

IV. Conclusions

Reconstructing some of the data we had from the beginning and comparing that with the final test results showed that in the noisiest spacecraft mode (had no fixes been incorporated), for flat noise and assuming that the DAS frequency was shifted, we would have suffered approximately 9.5-dB degradation of the VHF receiver. Again, the UHF receiver was not degraded in any of these tests. After all these fixes had been incorporated, the degradation was estimated to be approximately 0.65 dB, which well met the requirements not to exceed 3-dB degradation.

It would have been a little difficult (and we would have run out of time, certainly) to try to establish test levels for every one of the subsystems, or for what we would consider some of the noisy subsystems on the spacecraft. There are really two things involved in this approach. One would be to determine what level could be tolerated from every one of these systems, and the second would be what kind of coupling existed between each of these systems and the antenna going into the DFR. So, for this particular sensitive piece of gear, that approach would have been very unwieldy. We actually determined, in some of the tests, that some pieces of gear were quite noisy but evidently the coupling into the DFR was rather poor for them and we could tolerate quite a noisy generation of interfering signals. Another subsystem would be very quiet, in comparison, but it would have excellent coupling into the antennas and would cause problems.

Tests were performed on both the flight spacecraft and the backup spacecraft, and the results showed that degradation had been reduced to a permissible level. The *Mariner* Venus spacecraft flew close to Venus recently and apparently was a successful mission; no spacecraft noise was observed during the flight.

Discussion

H. T. Howard: I have one comment, as the experimenter's representative on the experiment that Mr. Keeler just talked about, on what this series of measurements meant to us. This is a receiver on a spacecraft that we can't control. On the ground, we're transmitting to the spacecraft with a 150-ft dish and 350,000 W of CW power. This is the limit with the knobs wide open. At Venus, we had a signal-to-noise ratio calculated of about 18 dB. When we started on these tests, we had a degradation of the DFR of something around 20 dB. Therefore, there would have been no science coming out, had we not entered into this program. By beating away at it, first on the problem of the DAS and its discrete frequency, and then on the subject of other noise, JPL was able to get it down to the point where we had our full theoretical signal-to-noise ratio at Venus. And I can say at this time that we've used every single dB of that signal-to-noise ratio in the analysis and wish we had a few more.

Back to Mr. Burkhardt's talk on the subject of ground support equipment, I would like to say that the main problems we had in testing the spacecraft hung up in the Spacecraft Assembly Facility was the elimination of noise from the ground support equipment. The type of acceptance for this equipment I'm not familiar with, but in one cabinet there are dc regulators whose purpose is to regulate the direct current going to a bunch of digital circuitry, in this case, countdown from a clock. These dc regulators oscillated at approximately 10 MHz. They produced the worst-sounding garbage all through the clock chain and the ground support equipment and they simply had to be turned off before we could do any testing of our instrument at all. The same thing was true of the main clock that provided timing for the ground support complex. This produced noise at 50 MHz. As Mr. Keeler pointed out, a computer in another room produced noise. This is all because the designer of that equipment, the dc regulators for example, couldn't care less as long as the dc regulator regulates dc. He doesn't care if it's emitting red heat. So there are problems with complexes of this nature. The important thing is that the work that was done on the receiver enabled us to get scientific results. If this work hadn't been done,

Discussion (Cont'd)

or if it had been halfway done, we would have been flying an instrument with, say, 10 or 15 dB of degradation and a terribly marginal experiment.

George N. Burkhardt: I have a question, and I want to thank Mr. Howard and Mr. Keeler for supporting my position. They had to shut a computer down, which I'm sure was designed by engineers and sold as a finished product. But it created problems. The question I want to ask is—I get the implication that you didn't have a screen room and it's a little bit disturbing. Do you have one?

Louis H. Keeler: Not one that large. The Spacecraft Assembly Facility is about three or four times larger than this room, and none has ever been built for us of that size.

George N. Burkhardt: I find that when you run into your type of a problem—that type of analysis—it's virtually mandatory, short of shutting down the entire facility and the surrounding metropolitan manufacturing complex, to get an environment that is conducive to doing some real RF low-level examination.

Louis H. Keeler: I think there can be problems in trying to come up with a facility that would not affect your receiver or your equipment at that frequency of 50 MHz; or perhaps you have anechoic material.

George N. Burkhardt: This is true, but I always like to know that all the problems I have inside that room are mine and that nobody else is contributing to them.

Louis H. Keeler: That's fine if there's enough money for the program

PRECEDING PAGE BLANK NOT FILMED.

N69-25435

Noisy Spacecraft I Have Known

Edward J. Smith
Jet Propulsion Laboratory
Pasadena, California

I. Introduction

I chose an informal title for my talk because I was sure at the time it was going to be an informal talk. In one sense, the title is misleading because, from my experience, I don't know of any other kind of spacecraft except noisy ones. I want to make it clear right at the outset, that my idea of what is noisy may be different from your idea about it. In the earlier talks, we heard quite a bit about what I judge is conventional EMI. Most of the programs which were set up to control EMI seemed to operate fairly successfully and I noted the speakers expressed optimism about their ability to control the kind of EMI they were talking about. Now you are going to hear from the experimenter's side of the house. I think you'll find that we live in a very different kind of world than many of you. We are going to show you what the world looks like when it is viewed from the other end of the telescope.

I want to spend a few minutes on introductory remarks. Earlier I was sitting with some of the other experimenters and we frankly had trouble orienting our thinking. I think the central differences in point of view can best be expressed in terms of the susceptibility to EMI. We experimenters are all involved in making field measurements in space. We would like to measure naturally occurring fields, not those associated with other experiments or spacecraft subsystems. Our susceptibility to interference is many, many orders of magnitude greater than what was discussed by previous speakers. Many curves were shown in which amplitudes of one sort or another were plotted as a function of frequency. In order to get yourself oriented, you would do well to concentrate on the region near zero that was shown in those figures.

We don't need this increased susceptibility just to make life difficult for everyone; unfortunately, the physical phenomena that we are trying to study involve very weak fields when judged by normal EMI standards. The reason for this has nothing whatsoever to do with the importance of the phenomena; the phenomena are very important. These phenomena are taking place in large volumes of space with scale sizes orders of magnitude larger than in the laboratory. Consequently, when you put a significant amount of energy into a large volume, the fields end up being quite small.

II. Field Experiments on Spacecraft

Typically, then, the field experimenter tries to make his equipment as sensitive as he can. He has to do this. Very often he is pressing the state of the art in order to make measurements which are very significant from a physical point of view. A typical field experiment will use a very sensitive detector followed by high-gain amplifiers; gains of 100,000 to 1,000,000 are not unusual. You can see right away that this is going to lead to all kinds of trouble. Frequently, the detecting equipment that the EMI people bring out cannot even detect fields that will saturate the field experiments. So, to a certain extent, the field experimenters have to be counted on to measure the levels of interference to see if they are tolerable. An acceptable level is usually a lot lower than what most people like to think about. I think the nature of the problems will become clearer as we go along. What I had hoped to do here was explain some of the problems which we have experienced on spacecraft. As the other experimenters add their painfully acquired experiences, you will begin to see what sort of things we're up against. I think that there is a big future in field experiments. I think there will be many, many more flown on spacecraft in the future, so that more of you in this audience are likely to face these same kinds of problems.

To set the tone of the discussion I will begin with a horrible example. In most of the classy talks I've heard, somebody always reads a quotation from some notable source like the Bible. I couldn't find any mention of EMI in the Bible, but I did find one recently in *Nature*,[1] which is entitled "Snags in Space." This article said that *Ariel III*, the first all-British satellite, has been a mixed success. Although all the subsystems have worked well, the data they have been sending back has been confused. One experiment from Jodrell Bank has so far yielded only interference. There seems no doubt that two experiments designed at the University of Birmingham are the cause of the interference. Both experiments interfered with the Jodrell Bank experiment, which incidentally is designed to measure absolute values of cosmic noise in space. Dr. P. C. Gregory of Jodrell Bank has identified two types of interference. The first saturates the receiver output under all conditions, but the second is not quite so severe, and Dr. Gregory philosophically hopes for at least some results from his experiments. The Birmingham experiments have also upset the attempt by the meteorological office to measure the concentration of molecular oxygen in space. Then the article says that Professor Sayers, who is from Birmingham (the one who is generating a lot of this noise), is "unrepentant." Other experimenters, he said at the symposium, paid too little attention to the problem of integrating their experiments into the satellite.

Based on my experience, I'm certain the other *Ariel* experimenters would be quick to point their fingers also. They probably would single out the engineers who are responsible for designing the spacecraft—they are the common scapegoat in all of this. In all probability, some of the interference could not have been predicted, except by testing the satellite with experiments going on in an ionized gas, a facility that's not readily available. Dr. Scarf of TRW is going to spend some time discussing some of the problems associated with interactions that can take place between the spacecraft and the plasma. I'm not going to make any further comments about that in my talk. A much simpler solution would have been to provide switching so that the experiments could be turned on and off instead of all operating at once. That was not done, the article concludes, because they wanted to save weight.

Fortunately, I don't think I have ever had any experience myself quite as bad as this. I've had a lot of spine-tingling experiences though, over the last almost 10 years and I thought I could share some of them with you. At the outset, I'd like to make it clear that I'm not an EMI expert and I see all these problems from what you might say is an outsider's point of view. This has certain strengths because I don't hesitate to provide bad examples and I'm not embarrassed to explain the kinds of things that have gone on. On the other hand, in all fairness, I don't feel that I can really criticize overly much the engineers who are involved. I think that all of us were involved in a series of exploratory experiments and we placed requirements on the spacecraft which people were not prepared to meet. They had not experienced them before. There was no mechanism set up to control such low-level fields. On many of the programs that I've been involved in, people have struggled valiantly to overcome some of these sources. But it has taken a lot of experience to learn how to cope with the problems. I don't doubt but what many of the programs that I've worked on would be considered highly successful from the standpoint of conventional EMI. In that sense, so far as I know, no squibs were fired inadvertently, no relays were unlatched; just receivers were saturated

III. EMI Experiences With Spacecraft Experiments

There are basically two parts to my talk. I will spend a few minutes going over some of the examples selected from each of the spacecraft and discuss some of the implications, trying to concentrate on the things that I

---

[1] *Nature*, Vol. 216, pp. 215–216, Oct. 21, 1967.

consider to be the most important. Then I will conclude by discussing a few of the elements that I think a good EMI program should have: that is, one to control the spacecraft generated noise in order to accommodate these field experiments.

A. Mariner Spacecraft Experience

As I said, the problem is one of susceptibility. One entire series of experiments that I have been involved in personally was on the *Mariner* spacecraft, where we measured dc magnetic fields. The bandwidth was extremely narrow, and, compared with field experiments you're going to hear about, the instrument was several orders of magnitude less sensitive. Nevertheless, we measured fields down to a gamma, which is 10^{-5} or 0.00001 gauss. We've had problems on all the *Mariner* spacecraft with the dc magnetometers. The problems associated with the permanent magnetic fields generated by the spacecraft have been discussed in a preceding workshop[2] held several years ago. I'm not going to mention anything about sources such as on-board magnets, but I would like to concentrate on the problems of conducted interference that we had. One always attempts to locate these field experiments as far from the spacecraft as possible to take the advantage of physical separation between the sensor and the sources. Although this approach has not always worked and we have detected spacecraft fields, it has been my experience that probably the largest contributor to interference has been conducted interference. Having amplifiers with so much gain, any signal which gets inside the equipment is a potential source of trouble.

Mariner II is the first spacecraft that I'd like to mention. That was a rather miraculous mission. The spacecraft had more close calls than a hero in a dime novel. We were involved in one of them when we were still about a month away from Venus and one of the solar panels shorted out. We saw a change in the spacecraft field of $\sim$100 γ, which was several hundred times our minimum sensitivity. Fortunately, we were sufficiently pessimistic in those days that we had built an instrument with two ranges and the solar panel short threw us into an upper range. We had a lot less sensitivity, but at least we were able to make measurements as we went by Venus. No one has been able to explain completely, and to everyone's satisfaction, what caused the large field change. The sensor was located on a structure which supported an omnidirectional antenna. In my opinion, that structure was carrying currents of some kind. There was a lack of an adequate grounding philosophy so that the spacecraft structure ended up being used as part of the return. There must have been currents flowing in the structure near our sensor and when one of the panels shorted, the paths that these currents were taking were upset with the consequence that we saw this very large field change.

On *Mariner IV* and *Mariner V* we had two problems. Fortunately, we licked those problems before we launched. The thing that I will emphasize continually is the importance of truly good testing on the ground—as adequate as one can make it. The usual systems tests are not designed to detect interference problems. One must plan a completely different set of tests. I hasten to add that many kinds of interference can indeed be seen in the usual systems test, and the experimenters, by and large, should use every opportunity they have to look for interferences, including the systems tests. The systems test environment, however, is not a good place in which to look for interference. It is inherently noisy. Very often it is in a location where the interfering fields due to transmitters and to 60-Hz power and its harmonics are so high that the experiment sensors have to be shorted out. You don't get a realistic look at what you might expect.

On *Mariner IV* and *Mariner V*, we had the opportunity to perform some special tests to look for interference and we found some. These were both examples of conducted interference. When the *Mariner IV* TV camera was working as it would near the planet, we found some very large sine waves with a very low frequency that were coming out of our experiment with a period of about 10 s. We thought perhaps these were fields. It turned out to be conducted interference and it was caused by large spikes on the power supply at $8\frac{1}{3}$ pulses/s. They had a harmonic which, as you can quickly calculate, was near 25 Hz. It turned out that we were performing a coherent detection of signals at about this frequency. What we were seeing was the beat between these two. This illustrates two things—first, that it is very unwise to have improperly chosen frequencies. This is difficult from a design standpoint because it is never clear at the outset, or at least it hasn't been, what frequencies will be present. The other thing is that very often interference, when it appears in the output of the field experiment, has a different form than that in which it originates. In this case we saw low-frequency sine waves but they were actually

---

[2] *Proceedings of the Magnetics Workshop, March 30–April 1, 1965*, Technical Memorandum 33-216. Compiled by Joseph G. Bastow. Jet Propulsion Laboratory, Pasadena, Calif., September 15, 1965.

associated with pulses at a much different frequency. This is a very common kind of happening. Another thing that is typical of the situation is that when there is trouble one resorts to filters and it's always the experimenter who gets to put them in his box. This is inevitably the case, so I would advise experimenters to leave a large filter cavity so you'll have plenty of room.

Mariner V also had a conducted interference problem which was worked out on the ground before launch. This was because we made another mistake, which is probably not too uncommon. We had a line, to be used for test purposes, that ran from the output of our experiment, which was also the input to an analog-to-pulse-width converter. It has been our practice, and I think also the practice of other experimenters, to occasionally bring test points out of the electronics package. At the type of levels we're talking about, that is just begging for trouble. We have to be very careful if we do that because any such lines can act as a pickup.

B. OGO Spacecraft Experience

I'll now pass on to my experiences on OGOs, which are probably far worse. The *Orbiting Geophysical Observatories* (OGO) are very large spacecraft weighing about 1,000 lb. They are essentially a box-shaped, rectangular parallelepiped approximately 8 ft long with numerous booms sticking out. We've had problems with the booms, but I'm not going to discuss those—I'll wait until the NASA workshop on boom vibrations. We have been preparing experiments for six satellites; four have been launched so far and one is to be launched fairly soon. We have a search coil magnetometer on the OGOs. It is a very sensitive, rather broad-band instrument. We cover all the frequencies from 0.01 Hz, which is dc to many of you, up to 1 kHz. This is common to the field experiments; we're all striving for bandwidth, as much as we can get. The EMI problems are increased because of this broad bandwidth. However, you can't talk the experimenters into choosing some narrow band in between all this noise to avoid such problems.

The search coil magnetometer can measure fields down to the order of a milligamma. I don't know what that may mean to you. However, as an example, the field from a long wire carrying one amp at a distance of one meter is something like 200 γ. That is five orders of magnitude larger. In order to avoid field pickup, our experiment has been located on the end of a boom 20 ft long.

My experience on these spacecraft has been mostly with conducted interference. We have always shared the experiment package at the end of the boom with another experiment. I suppose it is unfortunate in a way that our experiment doesn't weigh much. Field experiment sensors are usually very light. But then the project says, "We can accommodate 5 lb, so let's put two or three experiments out there at once, in one package." We've always had trouble with people that have been in what we call "our package." On OGO-1 we had a serious problem that was worked out on the ground, in which the experiment that was in the same package as ours at the end of the long boom had a preamplifier that oscillated. With everything shorted out in the systems tests, they weren't aware of this, and we certainly were unaware of what effect this would have on our experiment. Fortunately, the people responsible for the OGO project were persuaded by the field experimenters and their own good judgment to plan a series of tests in a remote location.

All the OGO spacecraft have been taken out to a so-called quiet magnetic facility near Malibu, Calif. Some of the RF people and others will disagree with the use of the term "quiet." That is where all the tests are run, and it's a lot quieter than it is down at TRW,[3] where the spacecraft are built. We normally spend time up at Malibu, for a period of 2 weeks to a month. Sometimes it's an excruciating experience for all concerned, spacecraft engineers, project managers, and the experimenters, but we've learned to live with one another. I think it was wise to recognize this kind of test was necessary. The tests have evolved a great deal over the years to a point where they have become very useful. This evolution has taken a lot of time, a lot of learning, and a lot of fighting.

Experimenters are only interested in results—they are not interested in the complexities and difficulties in getting the spacecraft to a quiet site or in doing the tests necessary to make certain the experiments will work. There are certain differences in point of view here which occasionally have to be resolved. Most of the successful interference measurements which we have made, however, have been made up at the Malibu location, and we have indeed seen evidence of interference there. It is very important to go into this quiet environment because of the extreme sensitivity of our experiment to 60 Hz power and its harmonics. We are normally completely saturated—our sensor must be

---

[3] TRW Systems Group, Redondo Beach, Calif.

shorted in the laboratory or in the systems test area. We can't see anything but gross conducted interference, unless we can go somewhere where we can deploy the booms and unshort our sensors. This is the important aspect of the testing.

Occasionally problems, including malfunctions, are missed in systems test and lead directly to interference which must be coped with. That was true in this particular case. After the spacecraft was launched, we suffered a very high level of interference associated with an ion trap experiment. It was an experiment that had grids on which there were modulated voltages. (Again, this is something that Dr. Scarf will discuss later.) The interference from this particular experiment was so high that we set up a gentleman's agreement in which we essentially alternated orbits—they took their orbit and we took ours. On all the OGO spacecraft, this has been very common; in fact, on all OGOs it has been necessary to cycle the experiments because of experiments interfering with one another. There are other experiments than ours involved in this. Out of a total of 20 experiments on the spacecraft, four to six field experiments have been flown; thus, one third to one fourth of the experiments are field experiments. The field experiments have all had problems of one kind or another, and it has always been necessary to cycle the experiments. Fortunately, we did not repeat the *Ariel* experience. Each experiment had its own power command, so that it could be turned on and off.

On OGO-2, we had another interesting experience. When we were at Malibu, we encountered some interference from a radio frequency mass spectrometer. In this case, we spent a lot of time but never did solve the problem. However, once the spacecraft was launched, we never saw the interference in orbit. Here we had the opposite situation to those described earlier. We have occasionally gone to Malibu, made measurements, and not seen interference which was subsequently experienced in space. One must expect that. There is no guarantee that we'll see all the interference that's there. On the other hand, we have also seen interference during testing that wasn't present when we were in orbit. I think these two points are related. They indicate that it's very difficult to do a realistic and adequate test of the spacecraft on the ground—there are always deviations. Nobody likes to bring expensive solar panels out into the field, so they are usually left off. Some wiring and grounding is not in the configuration as it will be in flight. There are bound to be deviations of this kind, and I would only urge they be kept to a minimum and that every attempt be made to keep the spacecraft as near flight configuration as possible.

We have also had problems with timing system pulses, as mentioned in earlier talks. Of course, we can see them at rather low levels. Peculiar things have developed on some of the OGO spacecraft. I can't overemphasize the point that a lot of our problems have had to do with the lack of a good grounding and shielding philosophy. It strikes me that there is a certain anarchy involved in most of the programs. The experimenters design their own experiment, or have engineers do it, and they choose a grounding and shielding configuration which seems best for them. No one seems really to be able to control this process or even to know what is going on. Consequently, on any of the spacecraft that we've been on, there are always ground loops which can be catastrophic in our frequency range. The RF people may like lots of grounds, but we don't. We like only one. We have suffered from this by naively assuming that there would be somebody watching out for ground loops—it turned out it had to be us. We had to find out about the shielding and grounds that were related to our experiments to make certain that there were no loops. This is something that the project normally did not seem to be in a good position to be involved in.

Once a strong EMI effort at TRW got underway on the OGOs following some of these bad experiences, a great deal was accomplished. The project cleaned up a lot of these problems. It's interesting to me that good courses in shielding and grounding do not seem to be a part of an engineer's training. One notorious example that we found on the OGO spacecraft was connected with the digital data system. When the EMI people started looking around with their equipment, they found that some of this digital equipment was not even enclosed in a metal box; it was in a plastic box which was flashed with gold on the outside. People are under all sorts of constraints, and they will do all sorts of things to satisfy thermal and other requirements such as weight and power, while creating a headache for someone else. On OGO-4 we had an interesting experience that is worth commenting on, in which we obtained part of the spacecraft from the project. We were having mutual interference problems and one of the experimenters who happened to be on the end of the long boom with us wanted to make certain modifications to his experiment. Since we have a magnetically shielded 8-ft walk-in room that is quieter than the Malibu facility, we took the boom from the last hinge outward, with the experiments on it, and conducted interference tests in the shielded room. We've done this on several occasions, and by and large our experience has been good in the sense that we've been able to fix interference problems and have the solutions work on the spacecraft and in orbit. I know one has some reluctance to do this kind of thing but I think that in many cases it is justified and is very helpful, particularly if there isn't any alternative.

One thing that has been a real hindrance to good EMI work on spacecraft like the OGO, in my opinion, has been the lack of a prototype. Typically there is only one spacecraft. If that spacecraft is going through testing and there are problems, it's very difficult to find time in the schedule to do tests, certainly on any kind of a relaxed basis. Anyone who is in a one-spacecraft situation probably has a similar problem. It would be a lot better if there were a matching spacecraft that one could use for tests of various kinds, including the EMI test. In lieu of that, one must either get a very small segment of time in which to do these tests or get part of the spacecraft away from the project.

Those are most of the examples I have. Although I have a large list, I don't think there are any others that are different in kind from the ones that I have mentioned. We see harmonics of the power frequency. There is a 400-Hz power source on the spacecraft, which we've always seen. We see harmonics of the data system timing pulses and digital data pulses which run around the spacecraft. We see malfunctions in other experiments. One of the charge particle experiments had a failure in a power supply that essentially wiped out three other experiments. The charge particle experiment had to be turned off. We've seen interference both times from the ion trap. We've had no end of trouble on the OGOs with the experiments that have been in the same experiment package with us. One of them had a transformer whose fields we picked up.

On OGO-4 we had ground loop problems associated with the experiment in the same package that we're in, but which we worked out in the shielded room. On the spacecraft that is about to be launched (OGO-5), there is a flux gate magnetometer on the end of the long boom, with which we're having problems. We've had to increase the separation between their sensors and ours by adding a small pedestal about 4 in. high to the experiment package. We see all sorts of transient currents associated with their experiment. Whenever they make a change (send current down the boom to calibrate their instruments or to provide heat) we see that. It's partly a result of poor routing of wires. These wires inevitably seem to come up the boom, wrap around our sensors and go back down the boom. I don't understand the necessity for that. They are undoubtedly things that get overlooked.

IV. Elements of a Good EMI Program for Field Experiments

Finally, I'd like to stress some of the same points again and give what I think are some of the elements of a good EMI program for a spacecraft that has field experiments on it. I discuss these elements not as one having been involved directly in doing this kind of thing, but only as an experimenter. It is very important to get an early start, during the design stages. No one likes specifications, but some sort of guide lines are really necessary. There has to be some kind of contact both with the experimenters and the spacecraft subsystems people. We've had a lot of trouble with the spacecraft. I'm not going to point a finger just at other experimenters the way the *Ariel* article did. Most of our problems have been with the spacecraft. There has to be a lot of contact with these people to find out simple things such as what frequencies they are generating. It is not always inevitable that somebody should be generating frequencies right in the middle of your passband.

A. Design for EMC

I've already mentioned the importance of some sort of a grounding and shielding philosophy. One should begin to look in a very aggressive way for potential problems, the most obvious being proximity. Very often the distribution of experiments on a spacecraft is based on keeping the spacecraft weight balanced. The way the weights are distributed has nothing whatsoever to do with what would be good for EMI. Very often the spacecraft is already designed and experiments are then added and you must live with what you get.

One of the things that is obviously required is some kind of help for design engineers. We found this with the dc magnetic fields too. It's all right to put a specification on a person—it's probably even all right to give him one that he thinks is impossible to meet. He'll battle, but try to meet it. But very often people really don't know how to go about it. A good program has to have people out in the field who have the knowledge and who will go out and help the designers work out some of their problems before the equipment gets built. This is necessary before you get tied up with a schedule that is so tight you don't have time to do anything more than put filters in the experimenter's package.

Another thing that was going in the right direction was the earlier discussion of testing; in particular, generation and susceptibility at the subsystem level. It seems to me a lot can and should be done as early as possible so that some corrections can be incorporated. Of course, we have contributed, in a way, to the problems that we have had, and I suppose the other experimenters in all honesty would agree. Our experiments have generally been too susceptible to frequencies outside our range. This was naive on our part since we expected that levels would not be nearly as high as they were. On later OGOs, we have tried, in designing our experiments, to make them as immune as possible to interference. This particularly applies to interference that could be conducted over power supply lines or test leads. A great deal can be done with this approach; we have had a fair amount of success with that kind of thing. Basically, there are three aspects to this problem. If you have strong sources, highly susceptible experiments and strong coupling modes, you can have disasters and catastrophies. In my opinion, the coupling modes are the hardest thing to control.

The one thing that I see as not being particularly hopeful is overanalysis of the situation. Analysis with or without computers, based on preliminary information, is a helpful thing to attempt. But, based on my experience, there is no substitute for a great deal of emphasis on good testing. I think the coupling between experiments, the way that interference is conducted from one experiment to another, would be very difficult to predict in advance, even if one had all the facts.

B. Prelaunch Testing

It is also extremely important to do good tests at the systems level, where the spacecraft is available for the integrated system test. We've had a lot of problems. If there were time, it would be interesting for those who are concerned with this kind of problem to find out how testing is done on OGO at Malibu. That represents about five years of experience. There has been a continual and a considerable evolution in making those tests successful. It obviously begins with some kind of a decent low-noise environment, which is not easy to find and not easy to protect. Once you take the spacecraft, the ground support equipment and all the other equipment there, it is no longer a low-noise site. If you are not careful, you must shut all that equipment off in order to do your tests. It is important to do these tests early. That is now realized on the OGOs; you must start this test before you start the rest of your test cycle. You have no hope of coping with the problem otherwise. You don't do this right before launch—you do it before the start of your vibration testing and your thermal vacuum testing. An adequate amount of time must be allotted. This test takes several weeks or a month. It is not a routine, formal kind of test. Everyone must be prepared to look very hard to find the interference. It's there, it's not easy to see because it is masked by so many extraneous noise sources; but if you look for it, you'll find it.

One of the things that we have found essential in doing these tests is flexibility. It is all right to go into the field with a test plan. No one would argue against that, but everybody has to be prepared to deviate from it because you are basically in a trouble-shooting situation. By the time you get to Step 2 you've inevitably encountered anomalies and then you have to start accommodating them. It has been our experience that one has to have a crew who are not afraid of damaging the spacecraft, who are not afraid to operate it in a nonstandard way, and who are willing to try to accommodate the experimenters in order to get good test results. I feel that apart from whatever hardware one might take out in the field, it's the kind of people that go out that are extremely important. Their dedication to seeking out EMI, as if they were J. Edgar Hoover, is one of the best conditions for a good set of tests.

C. In-Flight Tests

I also want to make a couple of comments about another area that has worked out quite well on the OGOs. This concerns the subject of in-orbit interference tests. All the experimenters should be brought together and kept in one place for the first week or so after the satellite launch. During this time, there is an opportunity to examine the satellite measurements and look for sources of interference, to find out who is interfering with whom and to arrange a proper operating schedule. Somebody is probably going to end up being shut off part of the time. There are two ways to do this kind of test. One way is to be careful about the turn-on sequence. On OGOs the field experiments have always been turned on first. They are turned on slowly enough so that they can get on scale, or are properly configured and then someone else comes on. Just the normal turn-on sequence will allow identification of sources of interference. There are always some problems associated with this. Once a noisy experiment comes on that is interfering with some experiment, no more useful data may be obtained during the turn-on sequence, so you may have to go back and repeat the turn-on with the noisy experiment turned off. You shut everyone off in some sort of order, turn them back on, repeating several times if necessary.

I would like to see more of the spacecraft turned on and off but there is a reluctance to do that, especially if the mission seems to be successful. There is always a residue of interference that is associated with the spacecraft. To a certain extent, for a spacecraft that has already been launched, it is academic if the subsystems are generating noise. However, if you are part of a continuing program, it's not academic to try to fix the next spacecraft on the ground, once you know what's causing interference.

There are other requirements for a good test that are associated with getting a good look at the data right after launch. Anyone who wanted to know how to do this would do well to contact some of the people at the NASA Goddard Space Flight Center who are responsible for the OGO project. One very important consideration is to see that the data acquired during these interference tests are almost immediately available to the experimenters. That's a crucial part of the program. On other spacecraft I have heard about, the data are taken, put on magnetic tape, go through the routine processing, and it is several months before the experimenters see it. This is not the way to do interference tests in space.

V. Conclusion

Thinking back over this talk, and the way I have spent my life in the last ten years, battling noise, I sometimes wonder if it has been worthwhile. It has been, in my opinion; but it's a strange kind of way to live. As I said earlier, I think there's going to continue to be a large number of field experiments, so I think many of you will be faced with these problems. The scientific aspects of these experiments are quite important. When one looks at the specifications and thinks over the kind of problems, there is no doubt that an EMI program of the type we're talking about in connection with the field experiments is very different—maybe an order of magnitude different than the kind that tries to prevent relays from getting latched or squibs from being fired. It seems expensive, and money seems to be a good reason for not doing some of these things. However, there are compensating factors that I would like to mention. There's a lot of money "lost" in having experiments turned off while they are in space. No experimenter likes to have his experiment shut off half of the time; he is missing a lot of potentially significant data. Moreover, he's transmitting zeros all the time. There is a lot of money tied up in the ground station operations. To acquire a lot of interference data, or a lot of zeros, is a questionable practice. Finally, there is the cost of the data analysis. The cost of the data analysis usually will zoom up in proportion to the EMI that one finds in the data. Interference complicates the data reduction even where it is still possible to obtain scientific results. In the presence of strong noise sources, the costs are going to go way up. As an experimenter, I expect and hope that you will all have a chance to face this problem yourself. I wish you all good luck.

Discussion

Robert L. Smith: I've shared many of the booms with Ed Smith. Although our last names are the same, it is just coincident. I want to resupport the need for interference tests such as the Malibu type. Our experiment is also a broadband experiment in the frequency range from 10 Hz to 100 kHz and overlaps his frequency range. There are several specific items I would like to mention. One item concerns power supplies and, in particular, toroids. You may have all learned in school that all of the magnetic energy is completely contained within the toroid, but this is true only for a very idealized, extremely carefully wound toroid. In general, you'll find that toroids are notorious noise sources, particularly in things like power converters.

Another practice related to this, which is probably left over from the aircraft industry, is the tendency to use 400-Hz power supplies with, of course, naturally nice square waves. This, coupled with the toroid problem, is a great source of interference. I would like to suggest in place of the use of toroids that you carefully consider the use of pot cores which are magnetically shielded on the outside. Our subcontractors have used a much higher frequency, around 32 kHz, for our dc-to-dc

Discussion (Cont'd)

converters with far less interference because we have used both the higher frequency and the shielded cores. With proper design, the efficiency will be greater than that obtained in conventional power supplies with toroids. Furthermore, the size of the cores can be quite small. The size of our cores is less than half the diameter of a typical toroid, and we get by with only one of these cores instead of two toroids, as is commonly necessary. In this power supply we have reduced weight and interference and there is a small increase in efficiency over the standard power supplies. I do have another comment relating to solar panels but I will wait for Mr. Peltzer's presentation.

William R. Johnson: Dr. Smith and I have burned the midnight oil at Malibu so I am familiar with the problems he is talking about. I wonder if maybe we still don't quite realize how sensitive he is. He mentioned two problems. One was heater lines and his problem with them. I don't know if we ever wound up with testing it, but we calculated the problem and he would be practically wiped out by the half loop of the twisted pair as it entered the connector carrying the heater currents. Another problem was a transformer problem he mentioned which we measured when we had this problem with OGO-D. It was a transformer leakage problem of about 50 mG at the experiment that was generating it, and he could still see it 20 ft away. His problem probably would never be predictable and I don't think that we can predict them. A problem that we have in trying to anticipate experimenters like Dr. Smith is that we can't get any information from the experimenters. We send out questionnaires on their sensitivities and such, and they seldom get answered. In his case, I don't think there's much he could do for us anyway.

Edward J. Smith: We told you the levels that we're sensitive to, I think.

Larry R. Pangburn: I know what I call an EMC systems engineering effort can overcome practically all of these problems. I say the technology base exists and it requires a commitment of manpower and dollars. It appears to me that the question is "Are the present programs bad enough that we're willing to reorder our commitment of manpower and dollars?" That appears to be the question in my mind. I feel definitely that the technology base exists to prevent this.

Edward J. Smith: I can only answer part of your question. It seems clear to me that there has to be more money spent. I think that the EMC program, the kind we're talking about here, must be a lot more extensive than what you were discussing earlier. Now, whether the technology exists or not, I have no way of knowing. I would perhaps make just a comment that my experience has been that you're talking about fields now and sources of interference which are many orders of magnitude smaller than what you were mentioning earlier. I'm pessimistic enough to believe that you are going to get into a whole new kind of problem. Maybe it will be a lot like what you do, only more of it. But I wouldn't be surprised if some of the problems weren't unique. I have no way of knowing to what extent the conventional EMC programs were imposed on these spacecraft. I'm hesitant to criticize the people that were involved, they obviously could have done a lot better. They made a lot of mistakes. We made a lot of mistakes. That's how you get to be an expert. Mr. Johnson was involved in an effort to try and do this and he has also been involved, I think, in the conventional EMC effort.

William R. Johnson: A good system approach could help us; there's no doubt about it, especially in the grounding and shielding philosophies. We had a great number of problems with experiments like Dr. Smith's in resolving the contradictions between magnetic field experiments which require one grounding philosophy and, as I'm sure Mr. Peltzer will point out, electric field experiments which require an opposite grounding philosophy. Since they fly on the same spacecraft and sometimes in the same area, it's impossible to satisfy them both at the same time. The experiments on OGO are so sensitive that literally we can't measure them with our equipment. We have to use the experiment itself to measure the interference. They respond to fifth-order effects and we have difficulty in really approaching accurately the first-order effects. So I doubt that you would solve these particular problems. You might make the overall situation better. I personally wouldn't even know how to approach the kind of problem that Dr. Smith responds to.

Edward J. Smith: I think we'd all agree that some kind of systems approach or rational approach is the way to do it, but I would be very hesitant to say that if you just took the programs that you were talking about earlier and imposed them on a spacecraft like the OGO with the experiments that are on there, that it would be successful. I doubt it very much.

PRECEDING PAGE BLANK NOT FILMED.

N69-25436

Design of VLF and Particle Experiments for the ATS-A Satellite With Special Reference to Electromagnetic Interference

G. L. Miller and H. P. Lie
Bell Telephone Laboratories, Incorporated
Murray Hill, New Jersey

I. Introduction

The ATS-A satellite was intended to be launched into a 6000-nm circular equatorial orbit and to employ gravity gradient stabilization.

Its primary mission was to act as an experimental broad-band radio communication vehicle. Secondary missions included, among other things, half a dozen diversified experiments denoted "Environmental Measurements Experiments" (EME).

The two experiments discussed in this paper were a part of the EME package and were associated with one another from the point of view of their experimental goals. One of them was intended to monitor low-frequency radio waves in the electron belts surrounding the earth, while the other experiment included facilities for monitoring electron energy spectra.

Both experiments were susceptible to noise pickup, while one of them was extremely sensitive in this respect. In addition, there existed the possibility of certain EMI incompatibilities between the two.

The very-low-frequency (VLF) radio experiment was intended to measure the magnetic component of low-frequency electromagnetic waves propagating in the electron plasma surrounding the earth. The amplitudes of interest ranged upwards from $10^{-8}\ \gamma^2/\text{cycle}$ ($1\gamma = 10^{-5}$ oersted), while the frequency spanned the range from $\sim$5 to $\sim$200 kHz.

Experiments of this kind are usually carried out by using some form of antenna well removed from the spacecraft for noise reduction purposes. However, in the case of the ATS-A satellite, an additional boundary condition was imposed: namely, that no equipment could protrude more than 1 in. from the spacecraft surface.

Bearing in mind that the vehicle employed more than 30 unsynchronized dc-to-dc converts, *and was never designed to provide a quiet RF environment*, the decision to fly a low-frequency radio experiment would appear in retrospect to be a formidable undertaking.

However, the decision was made, and surprisingly enough it ultimately transpired that such measurements are indeed just possible, although they require considerable caution both in the design of the equipment and in the interpretation of the data.

The second experiment consisted of a five-element silicon p–n junction detector telescope designed to make measurements on the ionizing radiation in the Van Allen belts. Apart from the question of its own sensitivity to external noise transients, this experiment also employed two dc-to-dc converters which were mounted less than 1 in. from the VLF receivers.

Further complicating the situation was the fact that the component density was high, as a result of employing some 750 transistors in a 10 × 7 × 2-in. box, which left little room for elaborate shielding and filtering arrangements.

The ATS-A spacecraft was launched into an incorrect orbit and was therefore unable to fulfill its primary purpose. However, the vehicle proved to be very useful not only from the point of view of a number of the subsidiary physics experiments but also as a means of obtaining certain information on EMI and the functioning of the instrumentation, as this paper demonstrates.

II. The VLF Experiment

Since large loop antennas could not be used, it was decided to employ ferrite rods to couple to the magnetic component of the electromagnetic field. These ferrite rods were ~6 in. long and wound with 2000 turns of wire. Two such units were employed, mounted at 90 deg to one another, at widely separated points on the spacecraft surface.

In order to avoid the problem of signal frequency pickup in the cables, or the central package, small preamplifiers and mixers were incorporated into each antenna unit. As a consequence, only the relatively high-level 455-kHz IF signals were sent from the antenna units to the central electronic package. A general view of one antenna unit is shown in Fig. 1.

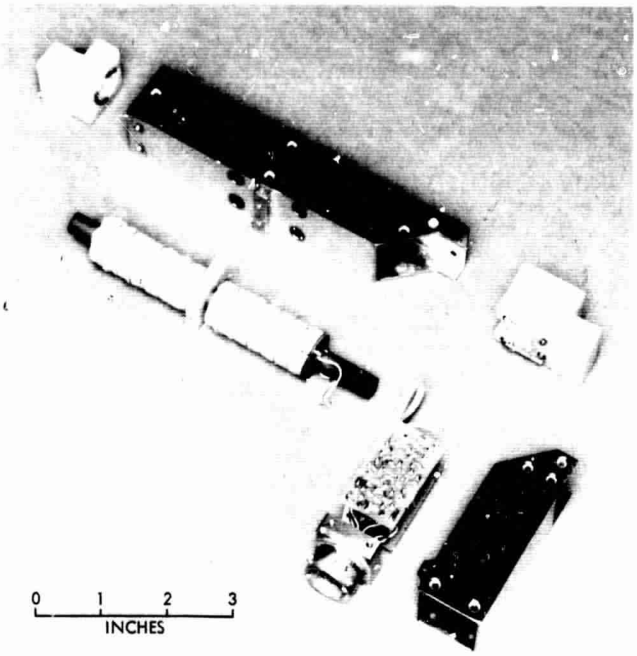

Fig. 1. Exploded view of VLF antenna unit

The signal from each antenna was amplified by a separate IF amplifier. Both mixers were driven from a common local oscillator whose frequency was in turn controlled by a 7-bit digital-to-analog converter. In this way, the two receivers could be tuned simultaneously over a range of ~5–200 kHz in 128 equal steps.

Two more digital bits were used to switch the gain of the IF amplifiers over the ranges ×1, ×10, and ×100.

Amplitude discriminators were employed to check that the RF signals were within the linear range of the amplifiers at each gain setting.

Cognizance was also taken of the *relative phase* of the signals at the two antennas in alternate 5-s data accumulation periods. (The rationale of this was that it was anticipated that at least some of the signals from space would be *circularly* polarized.)

A simplified block diagram of the experiment is shown in Fig. 2, while Fig. 3 shows the system in greater detail.

Control of the frequency, gain, and phase conditions was exercised by 10 bits derived from the satellite sequence scaler as shown in Fig. 4, where MSB denotes the most significant bit and LSB denotes the least significant bit. Bit S^0 incremented every 5 s, leading to 5 × 1024 s (i.e., ~80 min), for a complete cycle through the experiment.

Radio frequency signals that satisfied all amplitude and phase conditions were fed to digitizers whose output represented a product of the signal amplitude multiplied by the time. Data could be accumulated in this way for up to 3.8 s of each 5-s period.

Figure 5 gives a simple example of a case in which the RF amplitude wanders outside the amplitude limits twice in one data period. For all the time during which the amplitude is within range, signal information is

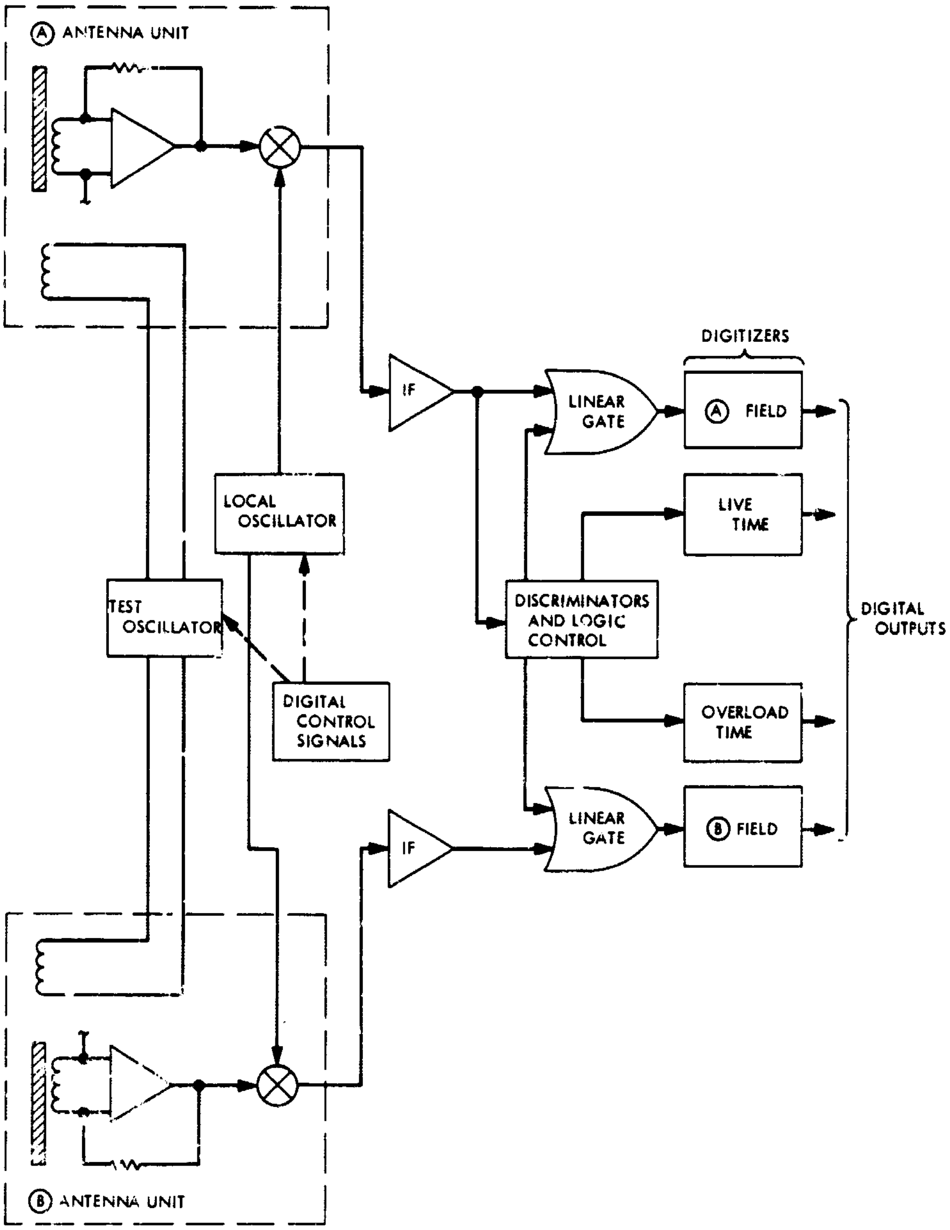

Fig. 2. Simplified block diagram of the VLF experiment

accumulated, while when it moves out of range the digitizers are shut off and accumulation ceases. In this way, a quantity representing the shaded area of Fig. 5 is telemetered to the ground after each 5-s period.

In addition, a record is kept of the "Live Time" and "Overload Time" in each period, these quantities being telemetered along with the field data from each antenna.

Finally, a single-turn test coil was attached to each antenna, and calibration signals were injected into these coils from a reference oscillator for ~6 min every 6 h.

III. Special Steps Taken to Minimize the Noise Problems

A. The Antenna Units

The equivalent circuit of an antenna unit is shown in Fig. 6. The output from the antenna signal coil is fed into a current preamplifier which has a large linear dynamic range to minimize the generation of spurious signals by overloading. The preamplifier output drives a mixer consisting of four p-channel field-effect transistors (FET) in a balanced bridge configuration. Mixers of this kind produce an output signal closely approximating the true *algebraic product* of the input signal and local oscillator signal. As a consequence, they produce *only* sum and difference frequencies and are remarkably free from spurious responses. This is to be contrasted with the situation in a square-law mixer, for example, in which the squaring of a large-amplitude discrete frequency input spectrum produces myriads of cross terms which can all show up as spurious responses.

B. The Local Oscillator

To derive maximum advantage from the product-type mixers, it was decided to employ a *sine wave* local oscillator signal rather than the more usual square wave variety. The rationale of this step was twofold: first, the absence of local oscillator harmonics still further reduced the possibility of spurious responses, and, second, the chance of radiation of local oscillator signal energy was minimized. (This was with regard to another low-level radio experiment, on the same satellite, that operated in a higher frequency range.)

As an added precaution, the local oscillator signal was derived from a low-impedance source and fed to the mixer via a balanced twinax cable to guard against its contamination by noise.

C. Shielding and Grounding

Connections between the two antenna units and the main electronic package were made via multiple-shielded cables as indicated in Fig. 7. Both the local oscillator and the IF signals were transmitted through shielded twinax cable. Center-tapped bifilar transformers were used in both cases to provide good common mode rejection (Ref. 1).

The noise advantage of a system of this kind can be appreciated by considering the alternative, comprising a conventional transformer-coupled coaxial cable and transformer, as shown in Fig. 8. This diagram illustrates that if noise voltages exist between the two ends of the cable braid (as they invariably do), then such signals will add or subtract *directly* from the signal of interest; i.e., the system has no noise immunity whatever, in spite of the fact that it uses coaxial cable and a shielded transformer. (This is easily seen by considering the path starting at the ground side of the signal generator and comprising the cable braid, the transformer primary, the cable core, and the source impedance Z_s.)

A less obvious, but very serious, additional source of noise can arise in vehicles like ATS-A which employ a double ground system.

One ground is the electronic or signal ground and the other is the box or chassis ground. The advantage of such a configuration is, of course, that it forces the return current from each experimental package to flow back to the power source via a definite path rather than flowing back through the chassis and spacecraft frame in some ill-defined way.

A marked disadvantage, however, resides in the fact that such systems can exhibit noise signals *between* the two grounds; i.e., they suffer from *ground-to-ground* noise.

This state of affairs is shown in Fig. 9 and indicates in a simplified way our situation on ATS-A. The shaded area represents the electronic ground plane inside the shielded experimental box. A noise generator is shown connected between chassis ground and the power ground of the dc-to-dc converter. (For clarity, only one power supply voltage is shown.)

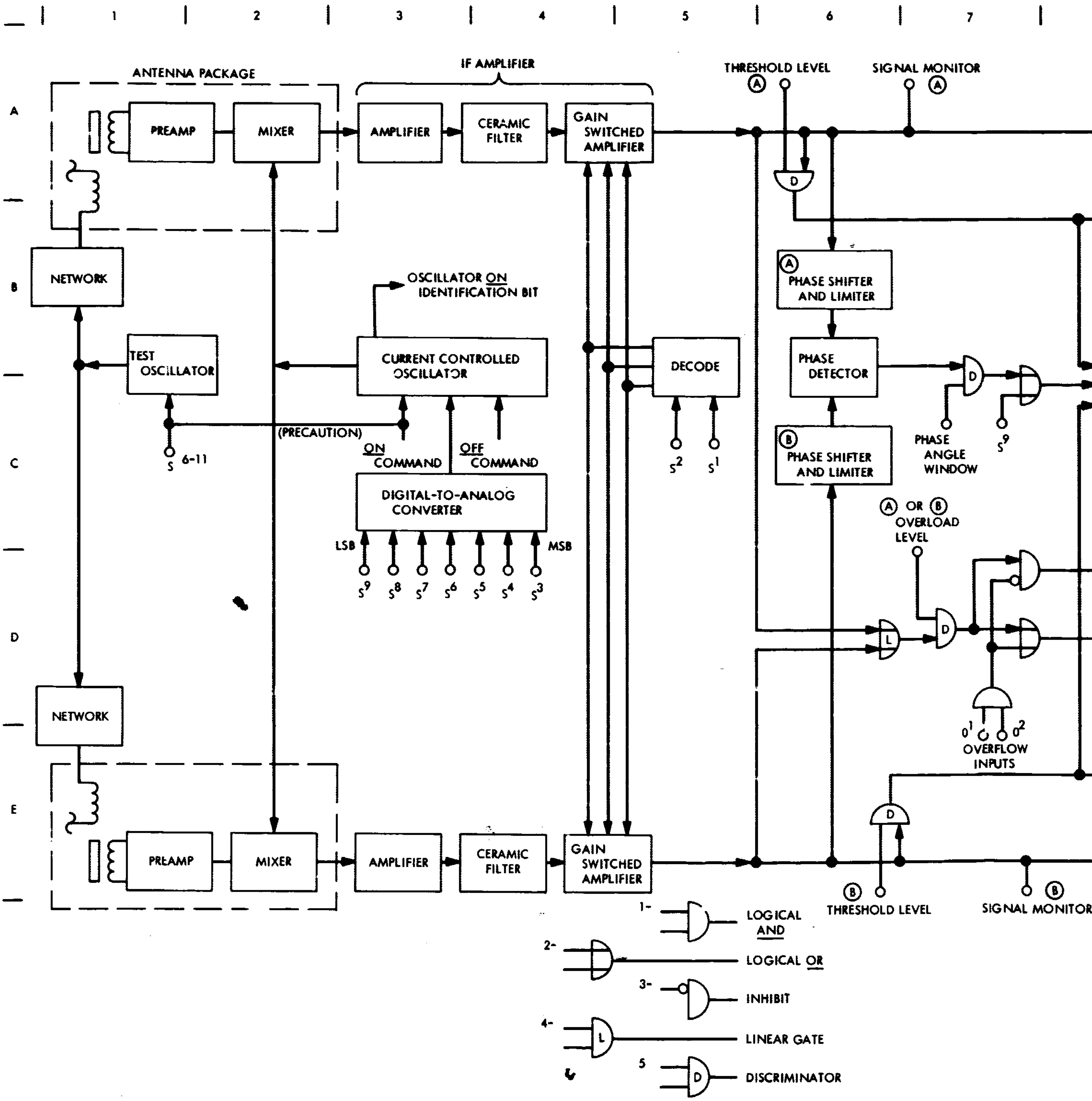
1
2
3
4
5
6
7
A
B
C
D
E
ANTENNA PACKAGE
PREAMP
MIXER
IF AMPLIFIER
AMPLIFIER
CERAMIC FILTER
GAIN SWITCHED AMPLIFIER
THRESHOLD LEVEL Ⓐ
SIGNAL MONITOR Ⓐ
D
NETWORK
OSCILLATOR ON IDENTIFICATION BIT
Ⓐ PHASE SHIFTER AND LIMITER
TEST OSCILLATOR
CURRENT CONTROLLED OSCILLATOR
DECODE
PHASE DETECTOR
PHASE ANGLE WINDOW
s^9
(PRECAUTION)
s 6-11
ON COMMAND
OFF COMMAND
s^2
s^1
Ⓑ PHASE SHIFTER AND LIMITER
DIGITAL-TO-ANALOG CONVERTER
Ⓐ OR Ⓑ OVERLOAD LEVEL
LSB
MSB
s^9 s^8 s^7 s^6 s^5 s^4 s^3
L
0^1 0^2
OVERFLOW INPUTS
NETWORK
PREAMP
MIXER
AMPLIFIER
CERAMIC FILTER
GAIN SWITCHED AMPLIFIER
Ⓑ THRESHOLD LEVEL
Ⓑ SIGNAL MONITOR
1- LOGICAL AND
2- LOGICAL OR
3- INHIBIT
4- LINEAR GATE
5 DISCRIMINATOR

115-A

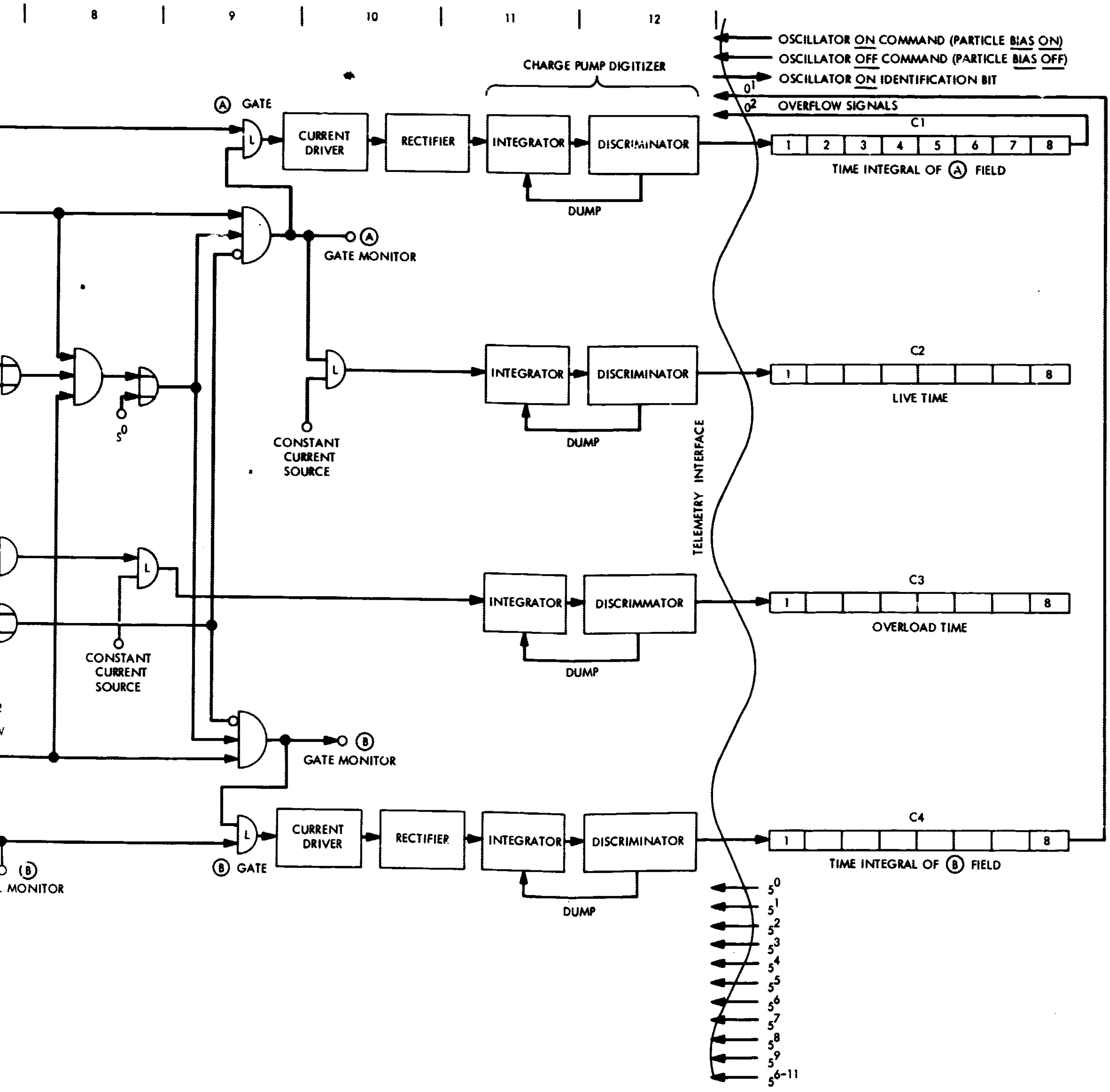

Fig. 3. Detailed block diagram of the VLF experiment

115-B

PRECEDING PAGE BLANK NOT FILMED.

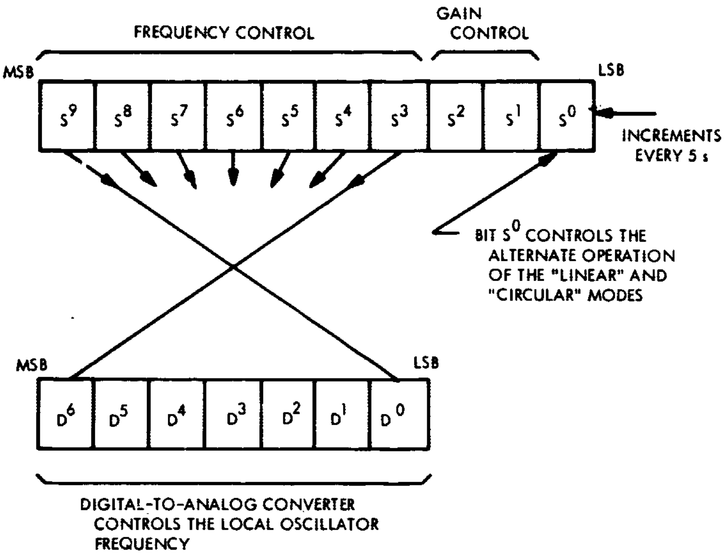

Fig. 4. Diagram of the control of the VLF experiment by the satellite sequence scaler

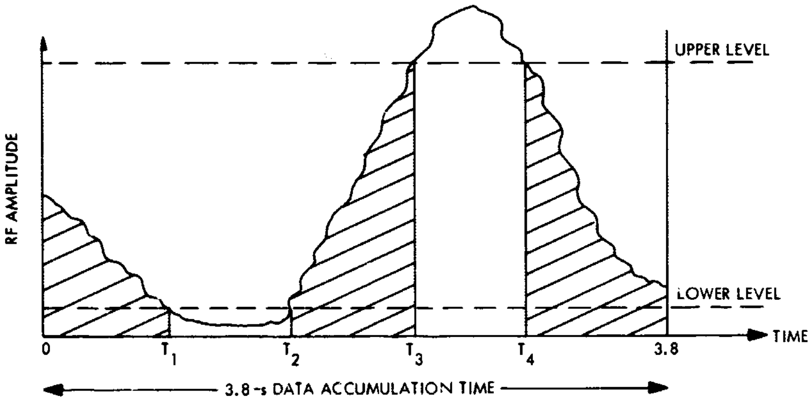

FIELD COUNT $\propto \left[\int_0^{T_1} + \int_{T_2}^{T_3} + \int_{T_4}^{3.8}\right] B_{\parallel}\, dt$

LIVE TIME $\propto \left[\int_0^{T_1} + \int_{T_2}^{T_3} + \int_{T_4}^{3.8}\right] dt$

OVERLOAD TIME $\propto \left[\int_{T_3}^{T_4}\right] dt$

Fig. 5. Example of the accumulation of telemetered quantities during a hypothetical sampling interval

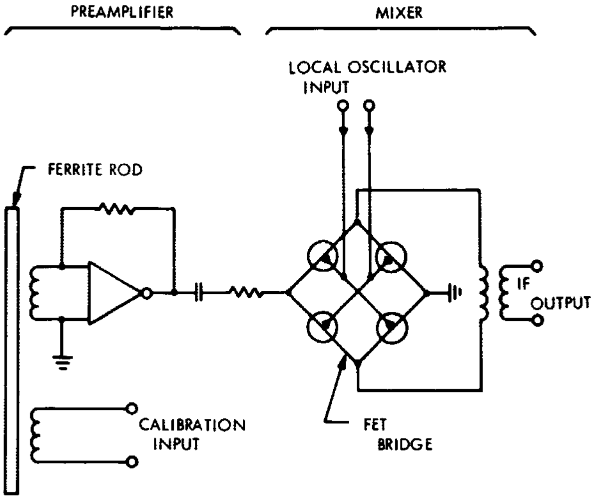

Fig. 6. Equivalent circuit of the antenna unit

Suppose, first of all, that L2 is absent (i.e., short-circuited) and that C2 is also absent (i.e., open-circuited). Under such circumstances, the full ground-to-ground noise appears inside the experimental package. If there then exists any small capacitive coupling between, for instance, an amplifier input and the shielding case, then the noise is coupled directly into the amplifier.

Our experience indicates that the source impedance of such ground-to-ground noise generators is extremely low, and consequently the problem cannot be solved by connecting a capacitor between the two grounds.

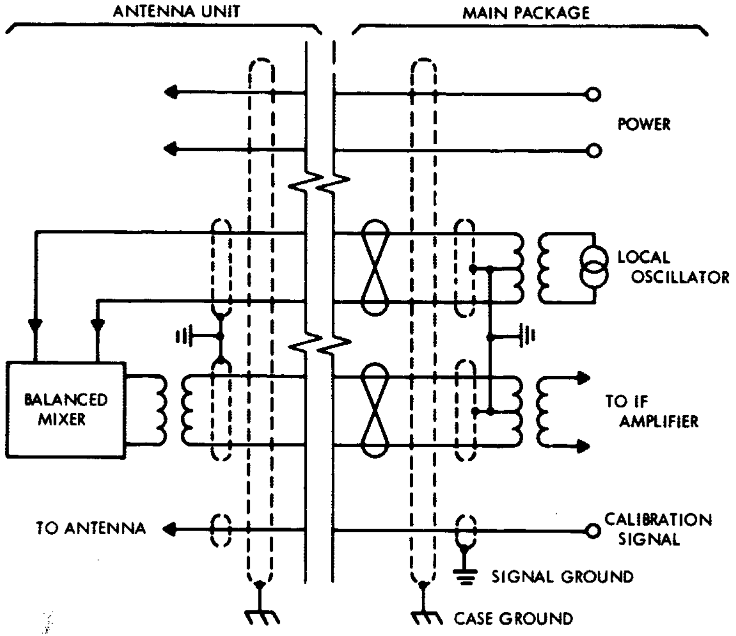

Fig. 7. Diagram of the system for carrying signals between the antenna units and the main package

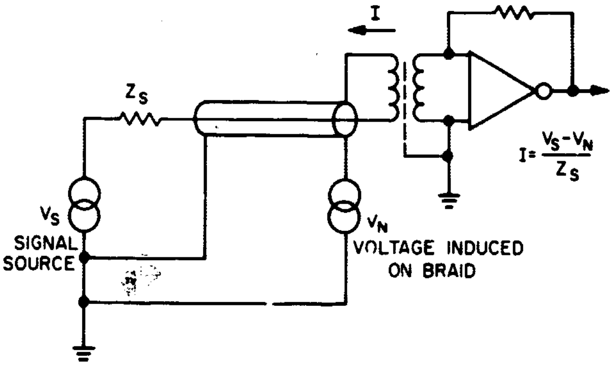

Fig. 8. Example of a cabling technique which is susceptible to induced noise

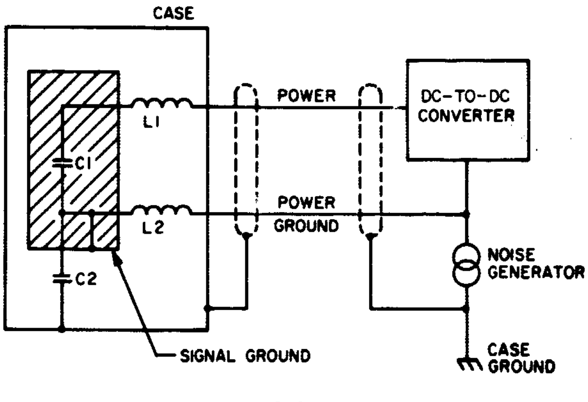

Fig. 9. Diagram of the VLF experiment power supply filtering

If the effective generator impedance is *raised,* however, by the addition of choke L2, then a capacitor C2 between the grounds can be an effective solution to the problem. We found chokes of ~150 μh inductance satisfactory when used in conjunction with a capacitor of several microfarads.

IV. RFI Measurements on the Experiments in the Laboratory

Apart from calibration procedures designed to check the receiver gain, frequency, and phase response, certain other special tests were performed to investigate the noise immunity of the experiment. All measurements involving antenna response were carried out using an 8-ft-diameter Helmholtz coil system in an electrically quiet room. Subsidiary tests were also made to check for possible effects of the frame of the spacecraft in distorting the applied calibration fields. Such effects were in all cases less than ±15%.

A. Spurious Responses

The advantages of linear mixers have been mentioned previously in Section III-A. If the mixer is nonlinear, its response V_0 to two simultaneous input signals f_1 and f_2 (of unit amplitude) can be written in the form

$$V_0 = f_L\,[(f_1 + f_2) + a(f_1 + f_2)^2 + \ldots] \qquad (1)$$

where f_L is the local oscillator frequency.

A check on the magnitude of the cross terms in Eq. (1) was made by driving the Helmholtz calibration coil surrounding the antennas by two signals simultaneously. The signals were combined linearly by a Kirchhoff adder, while the magnitude of each was adjusted such that, if tuned to the frequency of either, the receiver would be ×100 overloaded. A search was then made for sum and difference frequency outputs from the receivers. In this way, it was determined that the value of the coefficient a in Eq. (1) was less than 10^{-4}; i.e., spurious responses were very small indeed.

Another matter of concern was the question of breakthrough of any signal that happened to fall exactly at the IF frequency. Careful balance of the FET mixer bridges minimized this effect. A numerical check indicated that a signal producing a maximum receiver output at the frequency to which the receiver was tuned would produce roughly 3% of that output if tuned to the IF frequency. (A subsequent further improvement in this performance was incorporated in the flight backup experiment. This involved shunting the preamplifier mixer bridge with a single-element piezoelectric ceramic IF resonator. This effectively short-circuited the mixer at the IF frequency and produced a reduction of IF breakthrough by an additional factor of 50.)

B. Cable Pickup

Tests of cable pickup between the preamplifier and main electronic package were made by capacitively coupling noise signals into the cable braids. No significant effects could be detected until both inner and outer braids were removed from the twinax on a short section of the cable. Under these extreme circumstances, noise signals could be observed, but it was thought that this test was a very unrealistic one.

C. Ground-to-Ground Noise

In terms of the pickup of noise signals via paths *other* than magnetic coupling to the antennas, ground-to-ground noise was much the most troublesome.

The origin of this noise and its cure has been discussed in Section III-C, but it is worth pointing out that just because this is not apparently a problem with prototype hardware one cannot conclude that the same will be true of flight hardware. This fact is something that we learned to our cost in the course of integration of the VLF experiment into the spacecraft.

It ultimately transpired that the dc-to-dc converter used in prototype testing (see Fig. 9) differed from the flight hardware in that the latter used welded interconnecting nickel strip conductors instead of soldered copper wire. This so raised the impedance of certain interconnecting ground leads within the power supply package that spikes ~0.2 V high and ~1 μs wide appeared between the grounds. The ~75-μs period between the spikes was relatively noise-free.

The action of these spikes was to capacitively couple into the inputs of the amplifiers in the main VLF package and to shock-excite the IF filters with each pulse. In the case of one particular power supply, it turned out that the pulse repetition frequency was a subharmonic of the IF frequency, leading to a greatly enhanced effect.

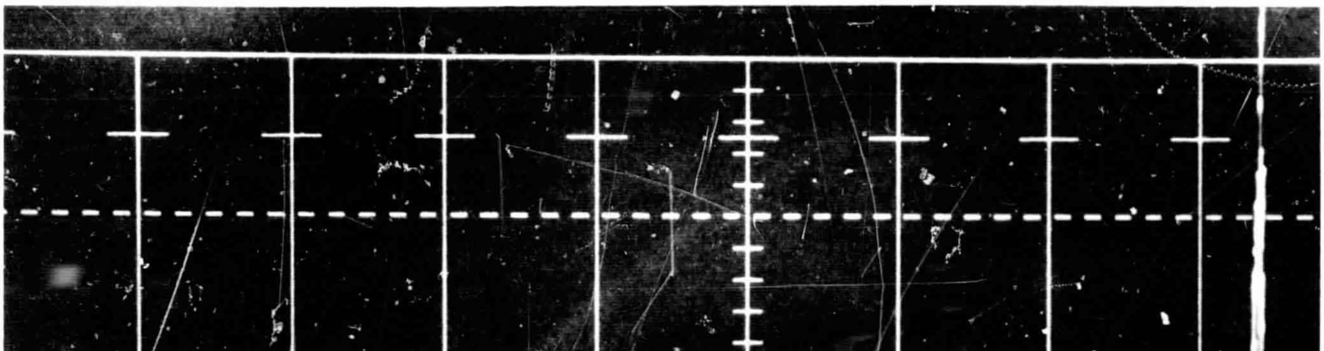

Fig. 10. Noise spectrum analyzer photograph showing the calibration spectrum

V. RFI Measurements Around the Operating Spacecraft

Possibly the most relevant single observation that can be made regarding spacecraft RFI on ATS-A is that *no information whatever existed on the subject until the prototype was assembled,* by which time all design was finalized and therefore substantial changes were impossible.

At that time we undertook a noise survey of the vehicle, using specially designed equipment, and were then able to obtain our first clear idea of the problems involved.

A. The Noise Spectrum Analyzer

One of the satellite VLF antenna units was modified to be used as a noise probe. The modifications consisted in removing the balanced mixer and replacing it with an emitter follower to allow direct observation of the antenna signal.

The preamplifier output was fed to a Nelson-Ross plug-in spectrum analyzer designed to be used with a Tektronix oscilloscope.

The preamplifier, spectrum analyzer, and a calibration oscillator were mounted in a small metal carrying case for easy transportation.

Many hundreds of VLF spectra were recorded with this apparatus, under all kinds of operating conditions. Only a very small fraction of these can be shown here but the general usefulness of the equipment cannot be overestimated.

Figure 10 shows a calibration spectrum taken using the built-in test oscillator that was included for this purpose. The oscillator produced narrow pulses at a 10-kHz repetition rate, and these were used to current-drive a 1-turn coil on the ferrite rod antenna. Fourier analysis of the resulting magnetic field revealed a large number of harmonics spaced 10 kHz apart and having substantially constant amplitude. The first 14 of these harmonics are clearly visible in Fig. 10. Their amplitude was set at ~0.2 γ, sufficiently large to be seen easily even in a high-noise background. (Of course, practically all the data were actually obtained with the calibration oscillator turned off.)

An idea of the general form of the data obtained, with amplitude and frequency calibrations attached, is shown in Fig. 11. This spectrum was taken at the location of one of the antennas on the spacecraft under the quietest possible operating conditions.

B. Survey of Spacecraft Noise

A typical relatively noisy spectrum is shown in Fig. 12. This was obtained with the antenna unit 3 in. in front

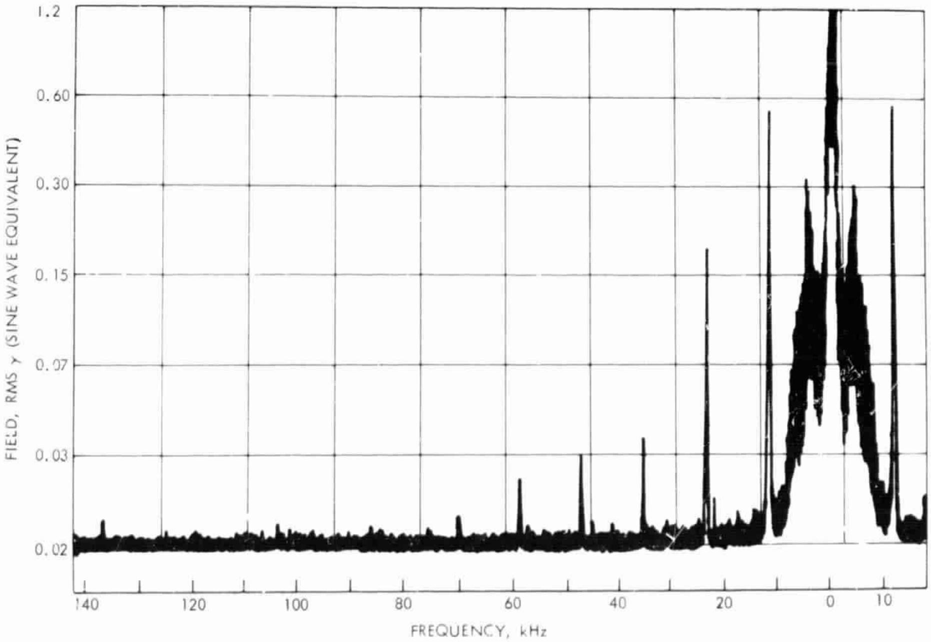

Fig. 11. Drawing of noise analyzer photograph with amplitude and frequency scales

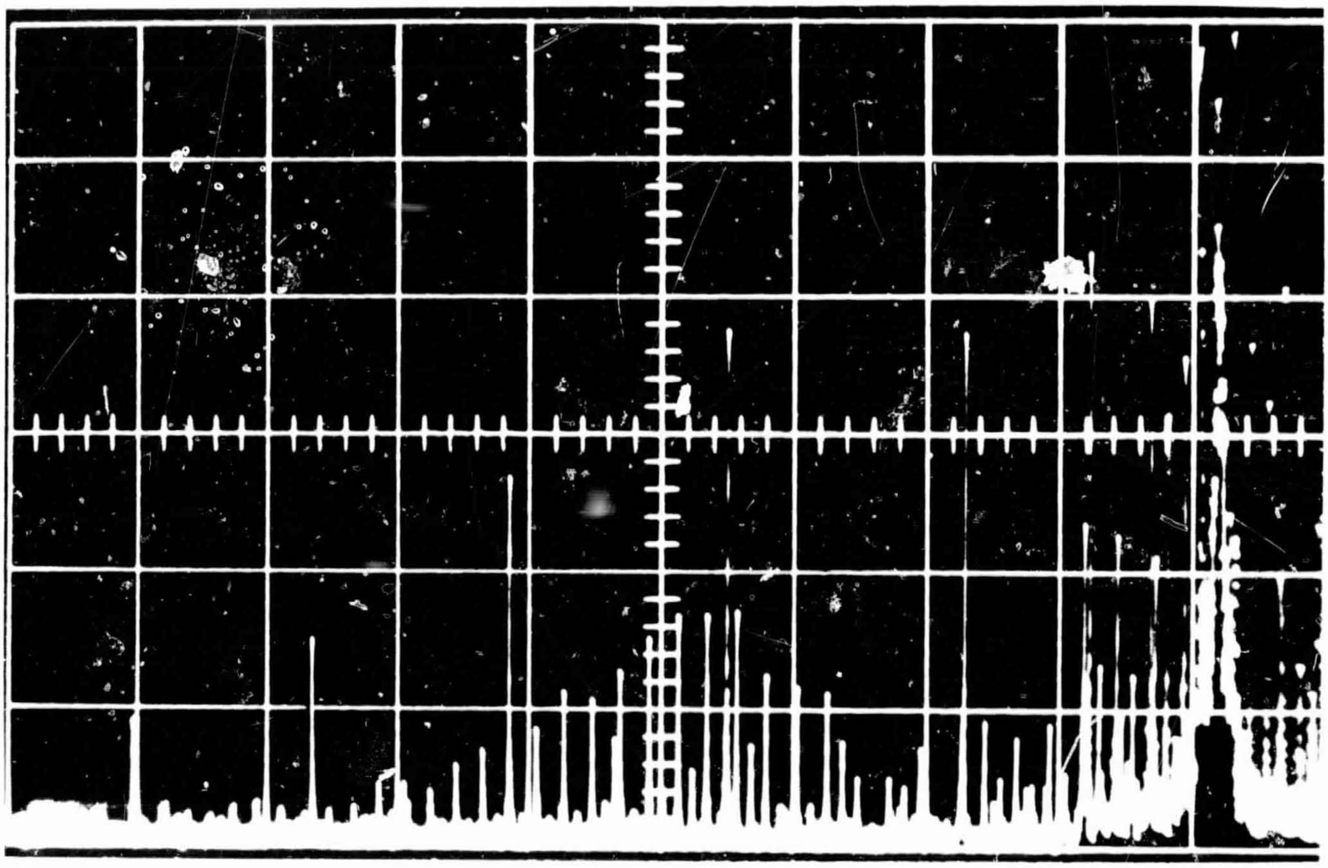

Fig. 12. Typical noisy spectrum

of the EME frame and was used to determine which EME equipment generated the most noise. In the spectrum shown, only the EME power supply and encoder are on; all experiments are turned off.

In surveying other regions of the spacecraft, under operating conditions, it was easy to find locations at which the entire screen of the spectrum analyzer was filled from side to side and from top to bottom with noise harmonics. Many of these spectra were extremely complex and often consisted of many simultaneous frequencies.

An interesting feature of some of these strong noise sources was that their fall-off with distance was apparently faster than $1/r^3$; i.e., the fields were not pure dipole. (It may be that one way this desirable state of affairs can occur is by the use of uniformly wound toroids instead of pot cores. The leakage field from such a transformer would be expected to fall off as $1/r^4$.)

The four spectra shown in Fig. 13 indicate the spectra observed at the location of the two antennas, under very quiet conditions, with the solar panels on and off.

VI. Interpretation of the Data Received From the Experiment in Orbit

Several months worth of data have been received from the ATS-A satellite. A considerable part of it has corresponded to very noisy spacecraft operation (i.e., times when a great deal of noisy equipment, like TV cameras, was in use) while much of the later data has corresponded to quiet conditions.

Of paramount importance in analyzing the data has been the question of the positive identification of spacecraft noise so that VLF signals so generated would not erroneously be attributed to the physics of space. Some examples of this identification procedure are discussed in the following sections.

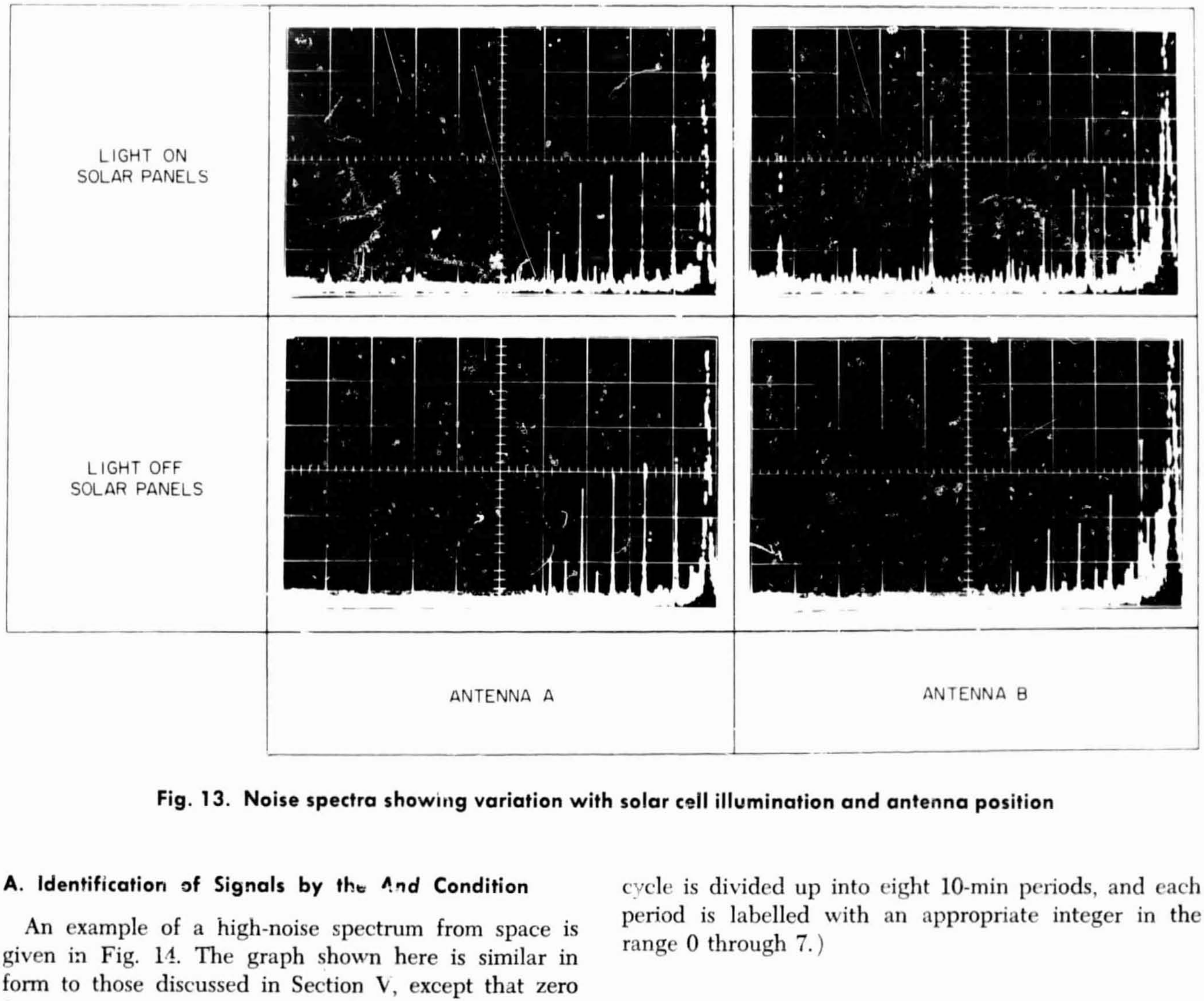

Fig. 13. Noise spectra showing variation with solar cell illumination and antenna position

A. Identification of Signals by the And Condition

An example of a high-noise spectrum from space is given in Fig. 14. The graph shown here is similar in form to those discussed in Section V, except that zero frequency occurs at approximately 99 on the x axis, while the highest frequency (at the extreme left hand edge of the diagram) is $\sim$220 kHz. The ordinate represents the time integral of the A antenna field as described in Section II.

Two other quantities are plotted in addition: namely, the *live* time and the *overload* time. These are denoted L and O respectively on the upper graph. The maximum *live* or *overload* time (i.e., 3.8 s) is denoted by a digital count of 200. It is clear that in some periods data were accumulated for somewhat more than half the available time, while the receivers were at no time overloaded.

It is also clear that large signals appeared at some 15 discrete frequencies at one time or another. (The small numbers attached to each data point represent a time during the data-taking cycle. The complete $\sim$80-min cycle is divided up into eight 10-min periods, and each period is labelled with an appropriate integer in the range 0 through 7.)

During the same period of time, however, the B antenna saw only three of these frequencies, as indicated by Fig. 15. (The *live* and *overload* times are common to both receivers, so the upper part of Figs. 14 and 15 are the same.)

This information, by itself, would strongly suggest that at least 12 of the 15 frequencies were of spacecraft origin. The inference would result because the noise sources happened to be close to antenna A and well removed from B.

Both of these spectra belong to what is termed the "linear" mode of operation. In this mode, the A and B signal digitizers each operate independently, provided only that a signal occurs above threshold at either antenna and that *neither* antenna is overloaded.

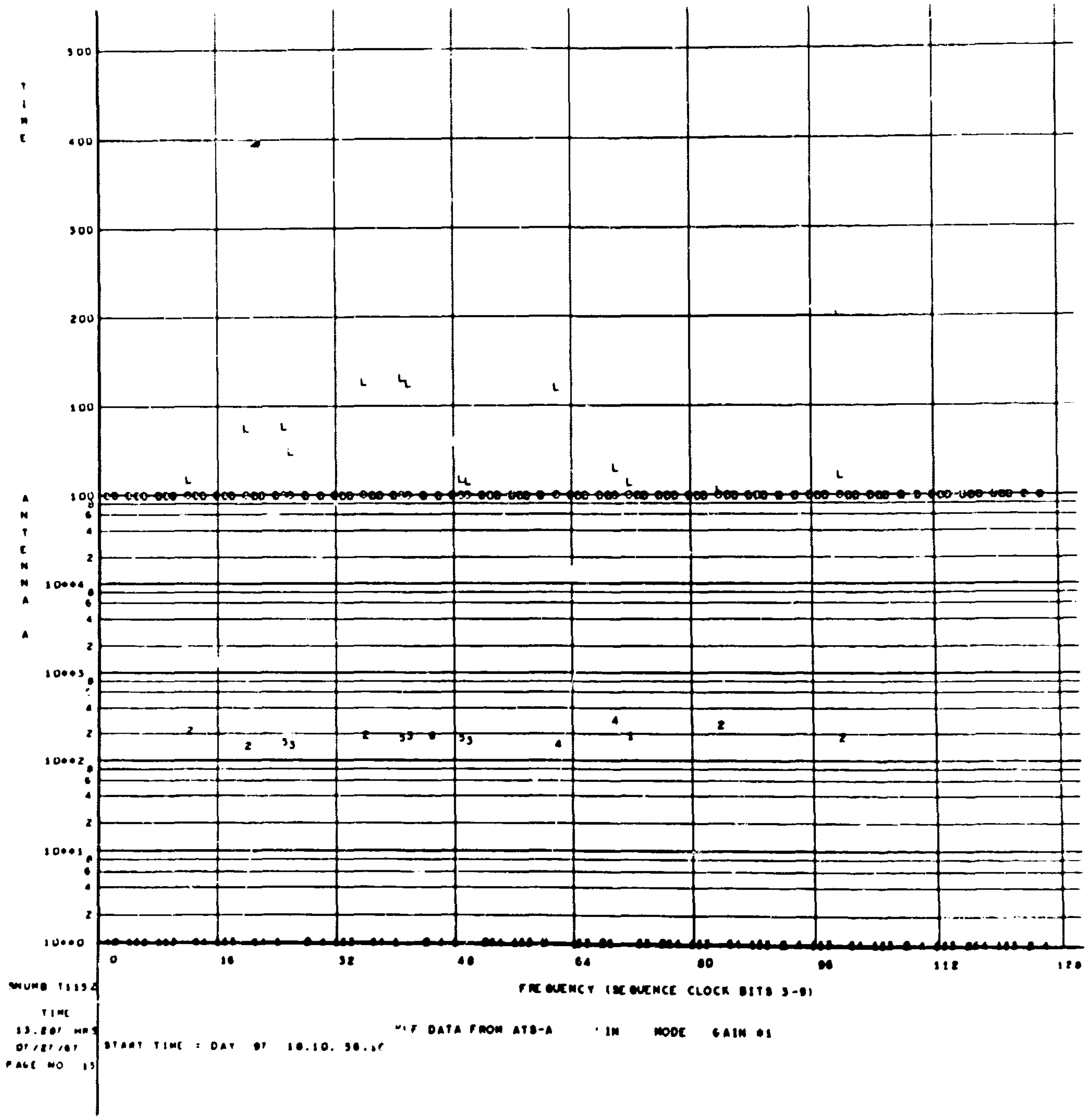

Fig. 14. Graph of space data from the A antenna in linear mode and low gain, under noisy conditions

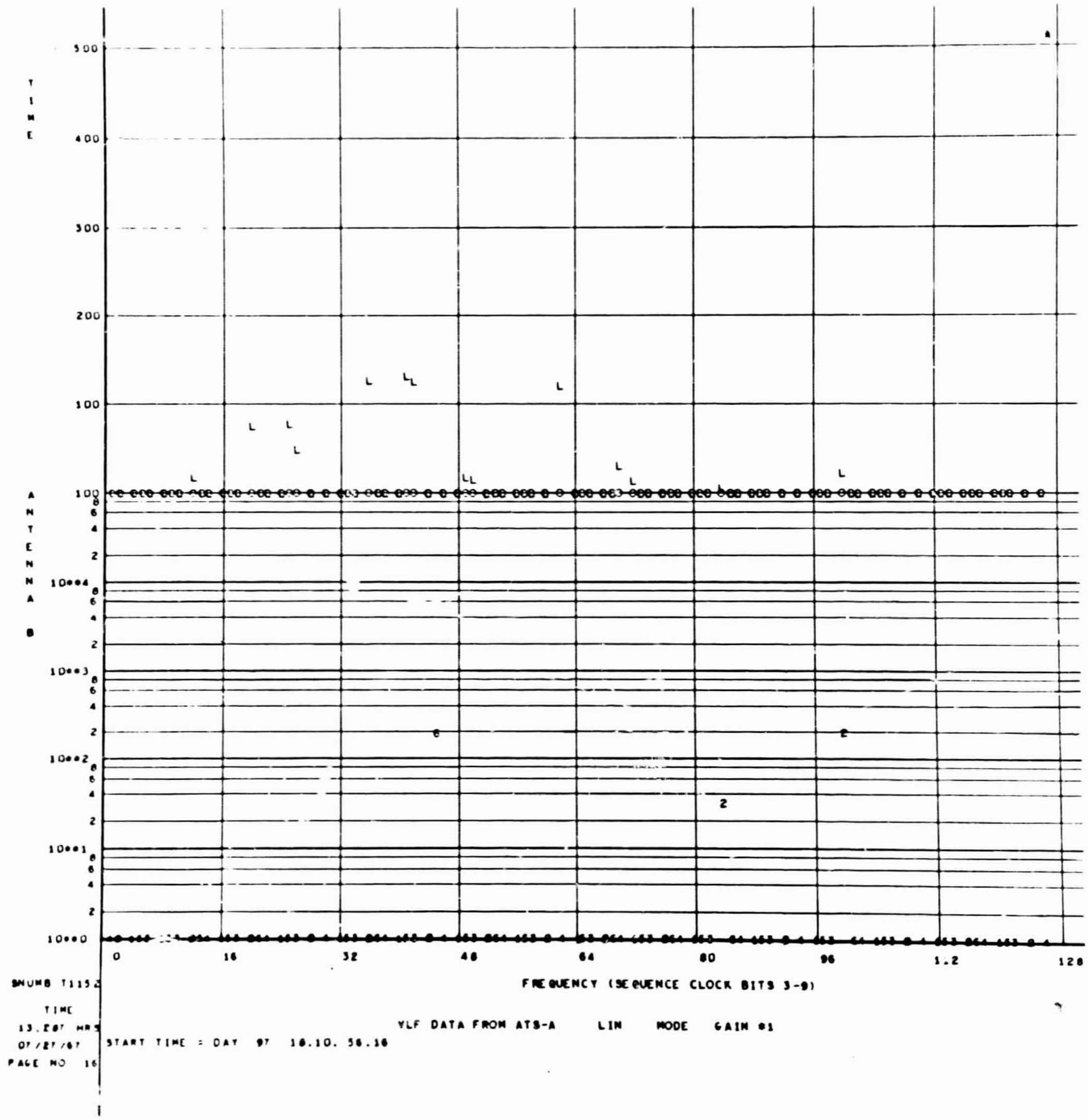

Fig. 15. Data from the B antenna with conditions and time the same as in Fig. 14

Further information can be gained from the "circular" mode, however. In this mode, two additional conditions are imposed:

(1) The signals must be within amplitude range *simultaneously* in both receivers before *either* digitizer operates.

(2) For all frequencies to the right of 64, the digitizers will only operate if the relative phase of the two signals is within preset limts.

Operation of the circular mode results in Fig. 16, where it is apparent that of all 15 points on Fig. 14,

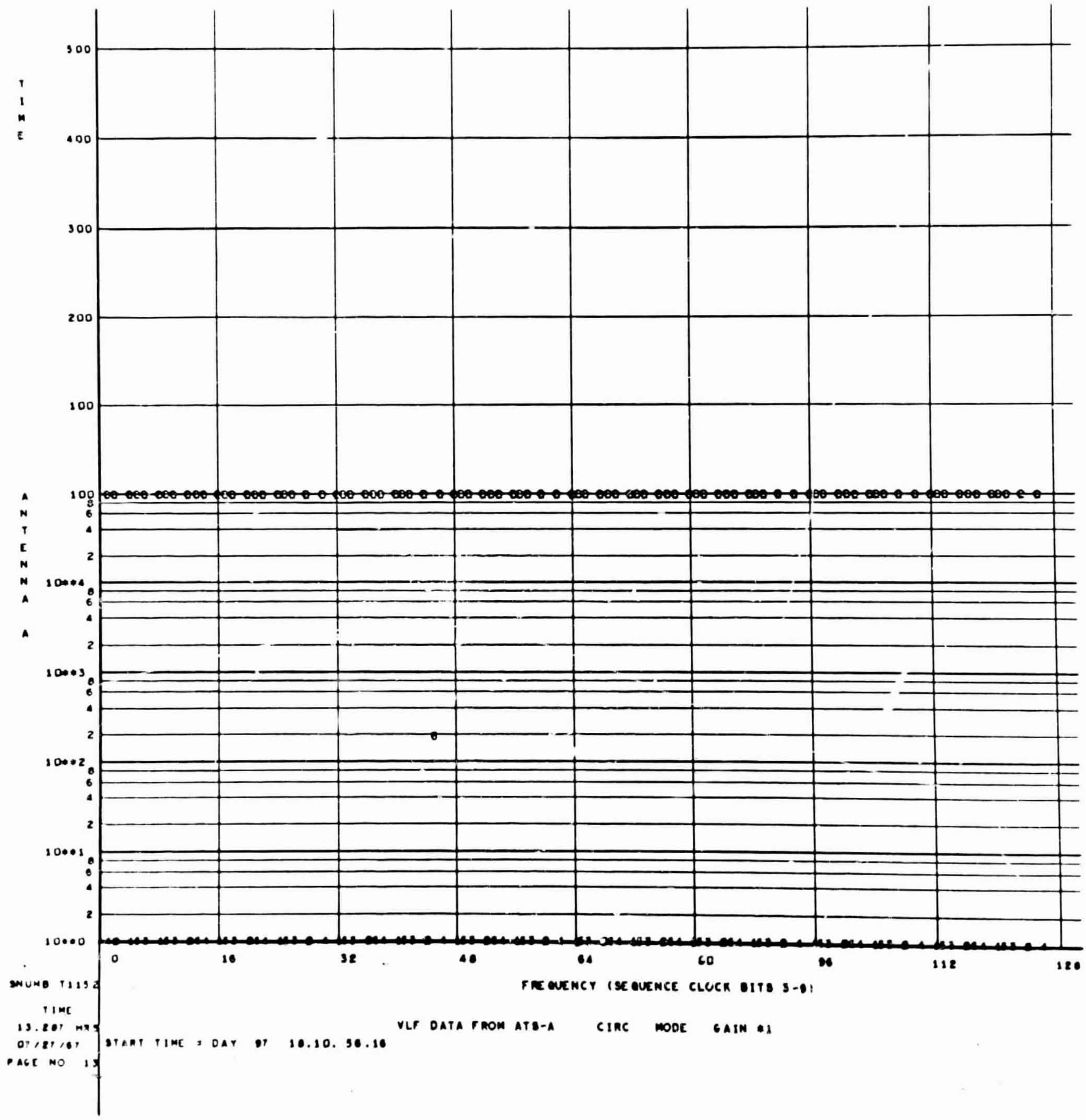

Fig. 16. Data from the A antenna in the circular mode

only that at frequency 45 remains a contender for interpretation as a genuine event. This large reduction is brought about by the *and* condition for points to the left of 64 and the *phase* condition for points to the right of 64.

Before proceeding to discuss the phase condition in more detail, it may be of interest to mention the further steps that can be taken to come to a decision regarding questionable points like the remaining one in Fig. 16.

In this particular case, identification is easy because one notices at once that in all three figures it is the only data point for which both the *live* time and *overload* time are completely missing. This identifies it as some kind of telemetry or tape error, and as such it would be disregarded.

In the absence of such clues there are other avenues open, such as examination of the spacecraft operating log to discover whether any known noise source was turned on or off in the time ~18.10 to ~18.20 on the day in question.

This discussion illustrates the way in which all of the data exhibited by the A antenna in Fig. 14 have been identified as originating on the spacecraft. It also illustrates the point that without two separate antennas and some method of comparing their outputs, this identification would have been virtually impossible.

B. Identification of Signals by the *Phase* Condition

An interesting example of the operation of the circular mode is afforded by Figs. 17 and 18. A comparison of the data points in the range 64 to 83 shows that signals above frequency 83 fail to satisfy the phase condition; i.e., are not circularly polarized. (The reappearance of the signals above frequency 64 is due to the fact that the phase detector is intentionally overridden for such frequencies.)

This implies that the low frequencies are circularly polarized, and, furthermore, additional evidence shows that the cutoff frequency at 83 on the frequency scale (~30 kHz) is reasonable in view of the physics of the situation.

However, the large signal amplitudes and the form of the spectrum both cast doubt on the origin of the signal. It is tempting to think that low-frequency signals from the spacecraft itself are coupling into the plasma and creating circularly polarized waves. Indeed, without some such hypothesis, it is difficult to understand the existence of the "slot" in the data.

C. Functioning of the In-flight Calibration System

During the test periods mentioned in Section II, test signals are injected into the antenna units. A typical resulting calibration is shown in Fig. 19. This test evidently took place in time period 4, and the test points fell close to their preflight position. The amplitude of the test signal corresponds to ~3 × 10^{-6} rms γ^2/cycle at high frequencies.

The other data points at low frequencies correspond to noncalibration signals obtained in other time periods.

D. Data From Space

A typical spectrum from a quiet period in space is shown in Fig. 20. The amplifier gain is a maximum and the receiver is overloaded at low frequencies. The broad flat region of the spectrum corresponds to ~3 × 10^{-8} rms γ^2/cycle. In the very quietest periods, it drops to approximately half this value, which corresponds closely to the prelaunch calibration figures, e.g., see Fig. 11.

Considerably more can be said on the subject of data interpretation but it is not strictly relevant to the present discussion of EMI. Suffice it to say that no convincing evidence of low-level wide band noise originating in space has been found, while all higher level signals so far examined have proved to be of spacecraft origin.

VII. Summary of Experience With the VLF Experiment

Seen with the 20/20 vision imparted by hindsight, it is clear that we were ambitious to propose a radio experiment for such a noisy vehicle. The design and testing of a spacecraft intended for this purpose must clearly be approached in the same rigorous way that is applied in the case of "magnetically clean" vehicles intended to be used with magnetometers. Indeed, this type of VLF experiment *is* a magnetometer, and one that is hundreds of times more sensitive than its dc counterpart.

On the other hand, it has proved possible to operate this experiment close to the initial design sensitivity of 0.01 γ rms, in spite of the problems posed by the vehicle, and in the process we have learned a little about VLF and a considerable amount about EMI.

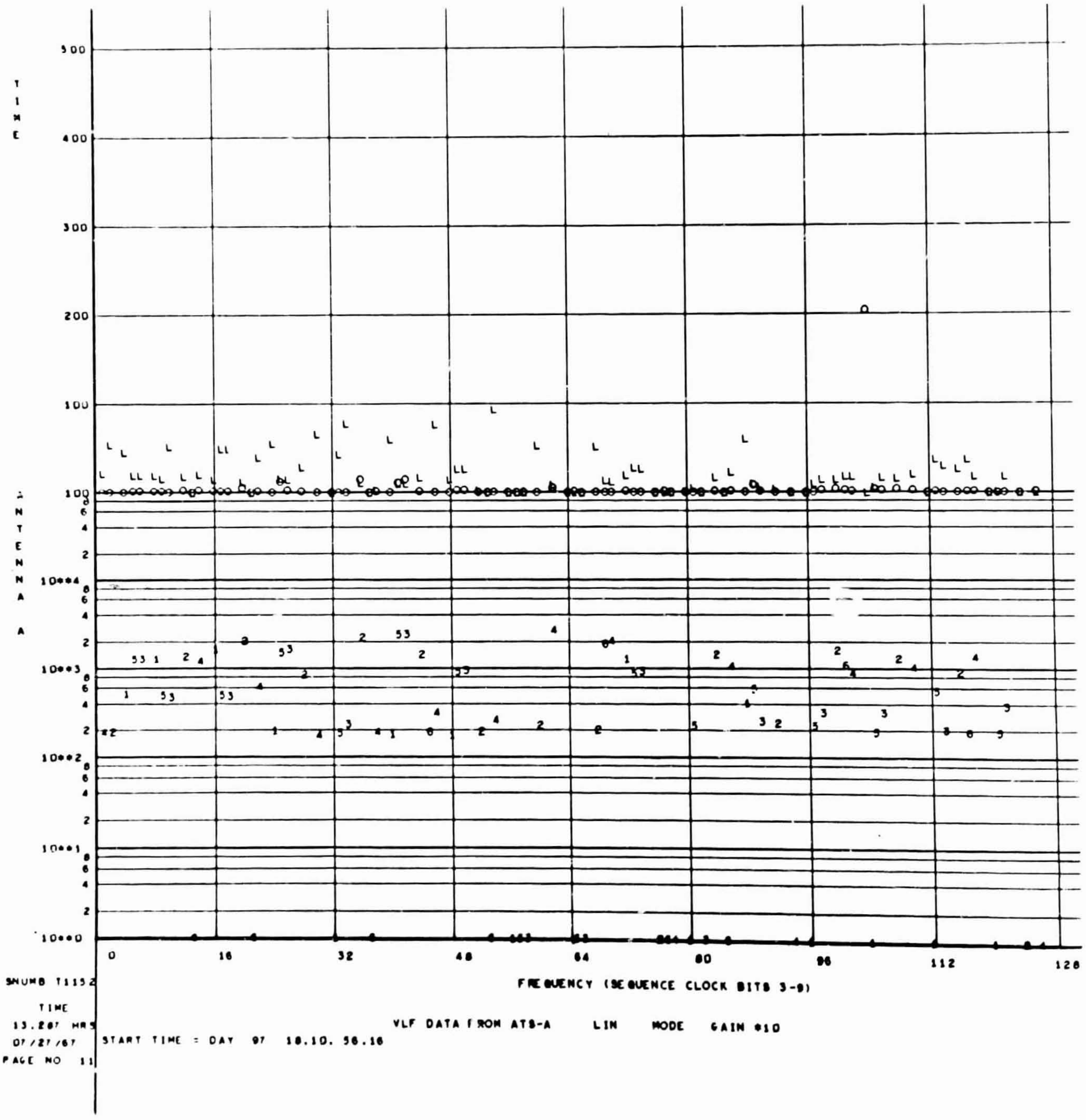

Fig. 17. Data from the A antenna in linear mode, medium gain

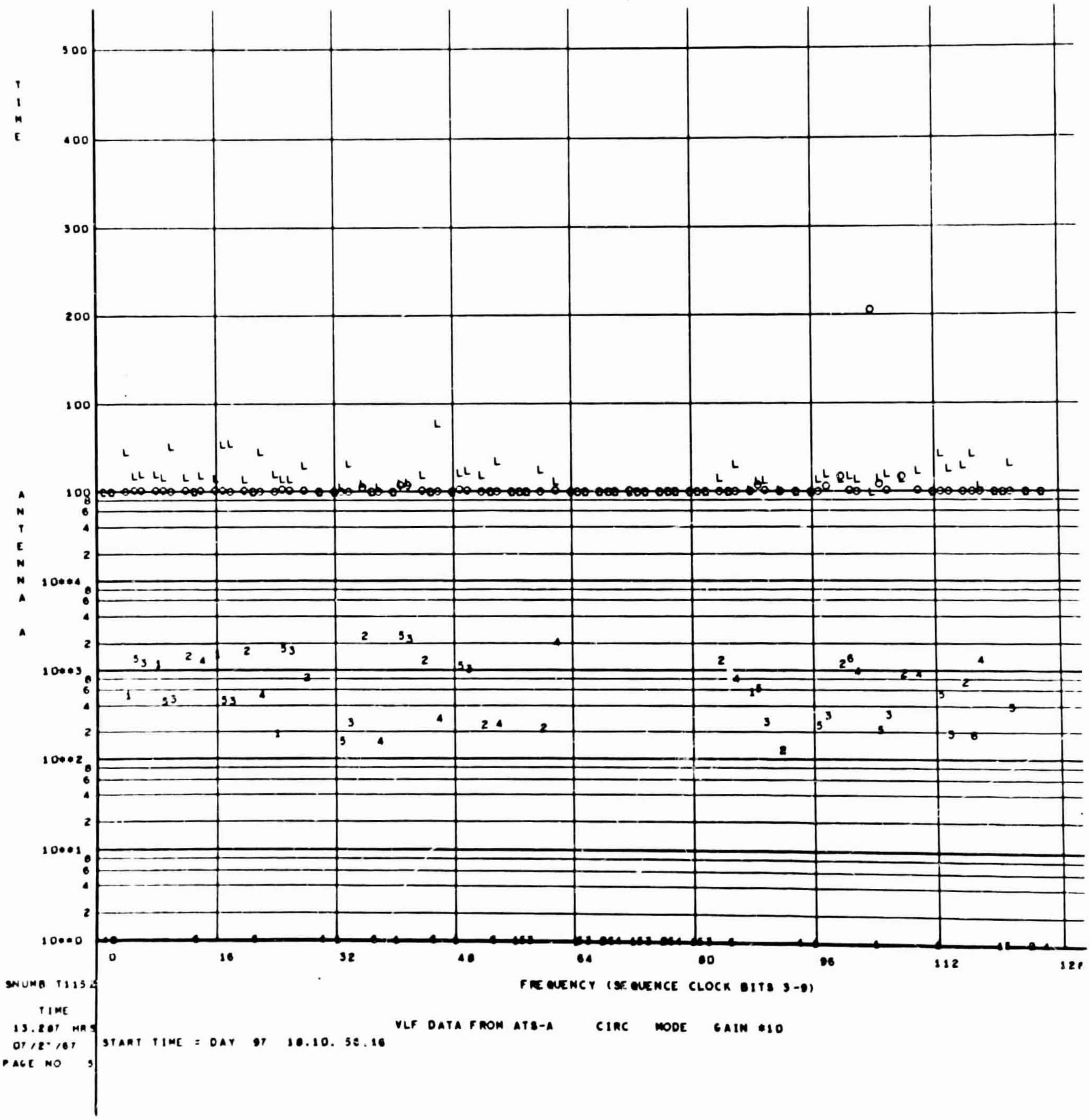

Fig. 18. Data from the A antenna in circular mode showing rejection of linear signals

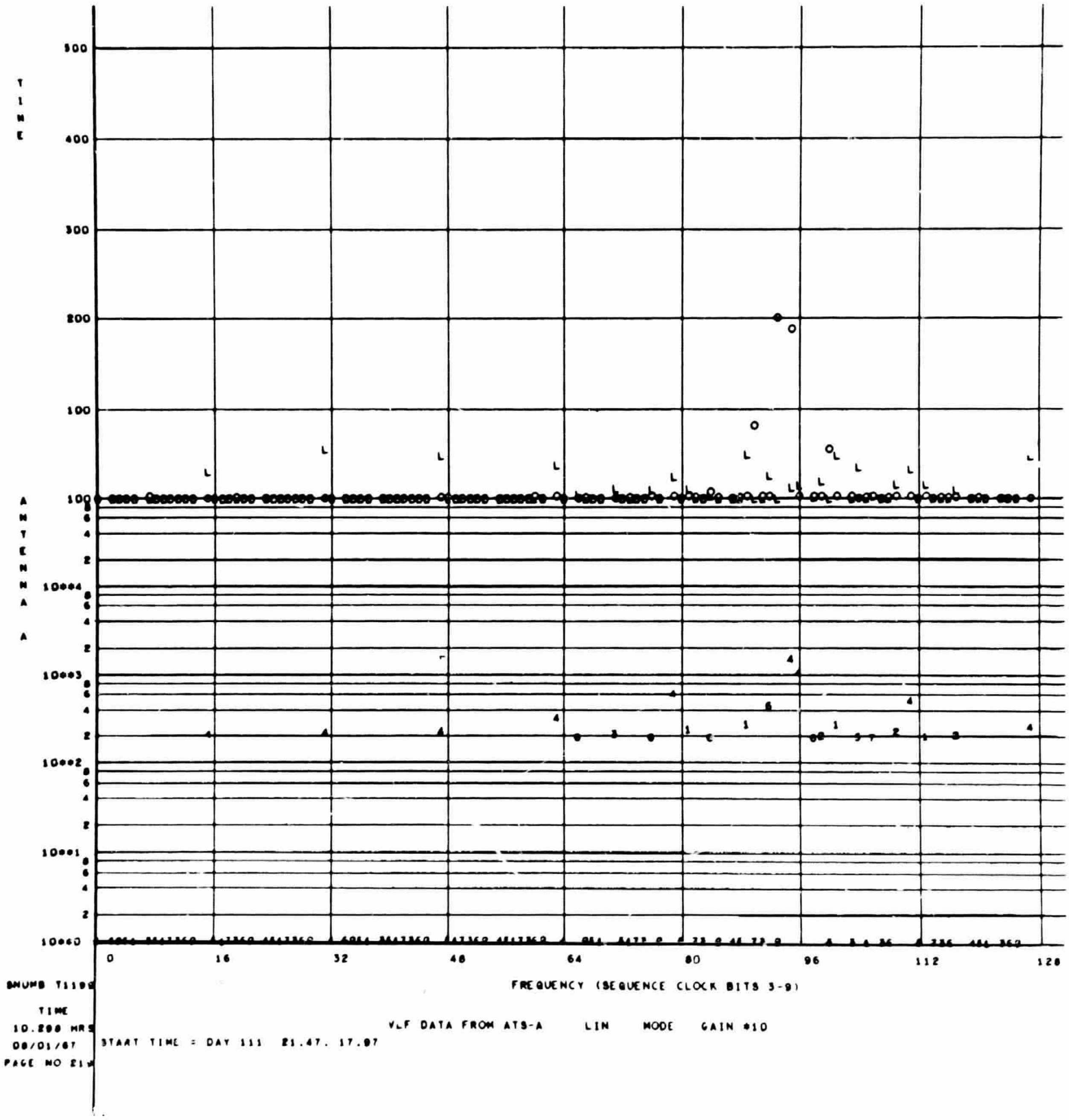

Fig. 19. Data during the operation of the in-flight calibrator

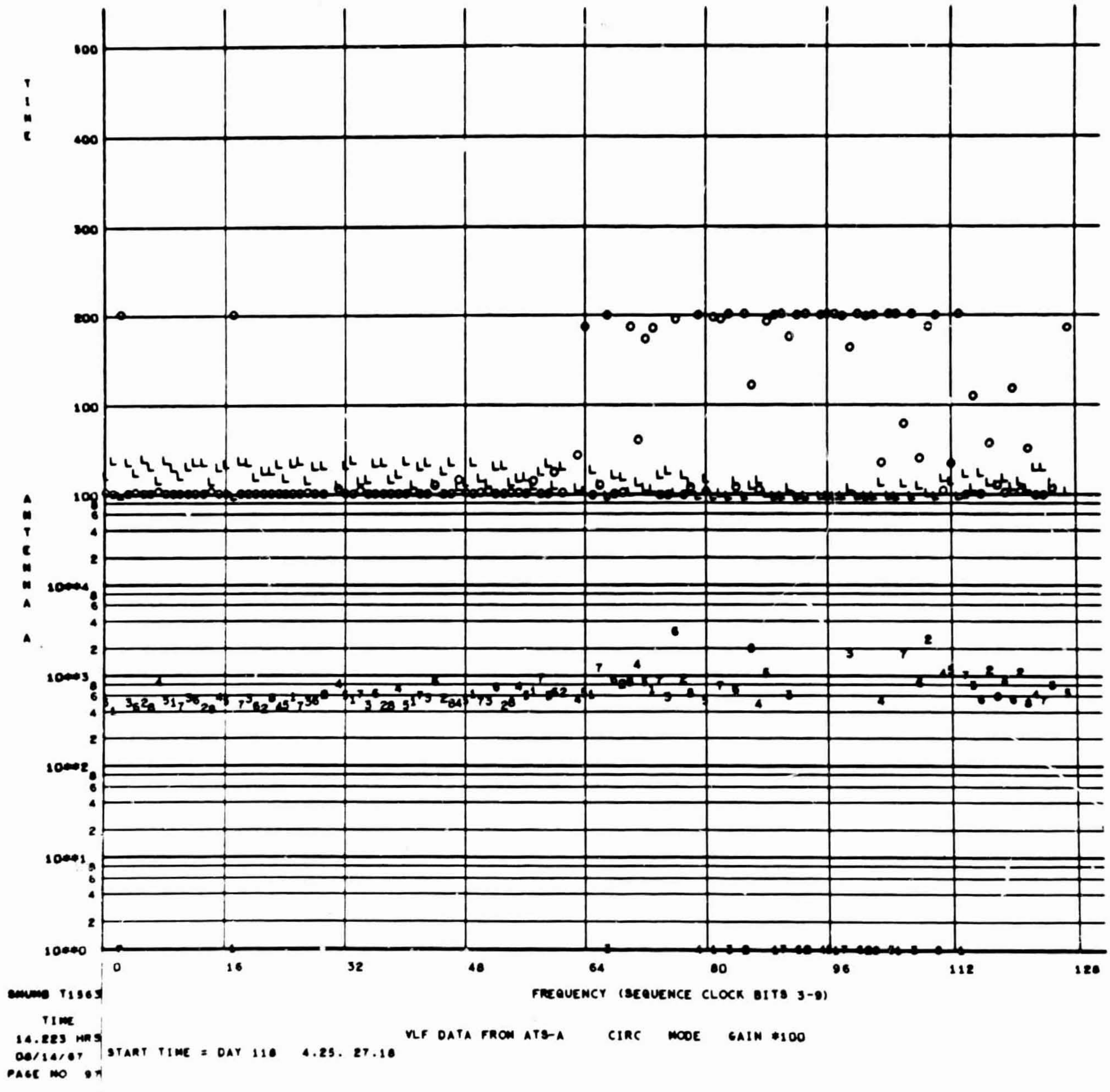

Fig. 20. Data taken at high gain during a quiet period

VIII. The Particle Experiment

The five detector telescope experiment, which is also on the ATS-1 satellite, was designed to differentiate between electrons, protons, and alpha particles, and measure their energy spectra. The energy ranges measured are approximately 300 keV to 3 MeV for electrons, 600 keV to 100 MeV for protons, and 2.1 to 90 MeV for alpha particles. A simplified block diagram of the experiment is shown in Fig. 21.

The experiment operates in nine different modes, in which the coincidence and discriminator logic is so arranged that it is possible to identify unambiguously the three particle types. In each mode, linear gates sum the detector signals and feed them with appropriate gain to the five-channel energy analyzer. The modes are permuted through a complete sequence in 16 cycles of the telemetry system. Following each cycle, the counts accumulated by the five-channel analyzer are read out.

The operation of each mode is shown in Table 1. Particle identification is possible because of the large differences in the rate of energy loss per unit path length for the three particle types. For example, an alpha particle must be more energetic than a proton in order to penetrate to a given detector and is therefore distinguishable on an energy basis. Electrons, on the other hand, can be identified because they are the only particles which can penetrate to the thick detectors (4 and 5) without losing enough energy in the thin detectors to register a coincidence. Thus, the energy analyzer is used to identify particle type, and the energy spectrum of the particles is accumulated during each sequence through the modes.

IX. Noise Considerations

Although a particle detector is not sensitive to radiated spacecraft noise in the way that a VLF antenna is, the very small signals involved make RFI protection very important. This may be appreciated by noting that if one requires that the EMI produced interference be no more than an equivalent particle energy of 30 keV, it means that the charge signal induced by EMI at the

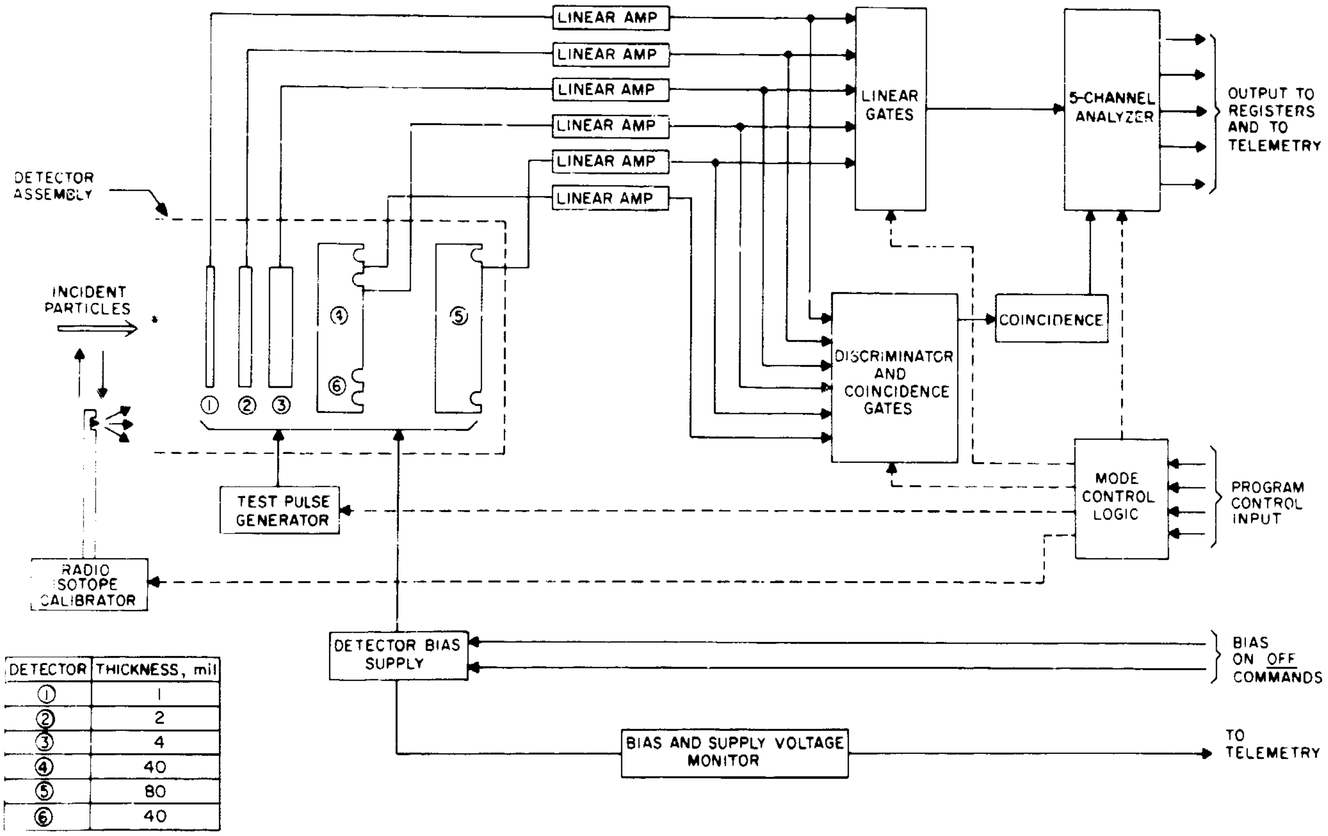

DETECTOR	THICKNESS, mil
①	1
②	2
③	4
④	40
⑤	80
⑥	40

Fig. 21. Simplified block diagram of the particle experiment

Table 1. Characteristics of the particle experiment as a function of mode of operation

Mode	Coincidence and anti-coincidence require-ments	Required energy loss in indicated detectors, MeV	Particle and energy range, MeV
A	$1\bar{2}$	$E_1 > 0.39$	$0.63 < p < 1.75$ $2.1 < \alpha < 3.3$
B	$12\bar{3}$	$E_1 > 0.39$ $E_2 > 0.28$	$1.75 < p < 3.0$ $3.3 < \alpha < 12$
C	$23\bar{4}$	$E_2 > 0.28$ $E_3 > 0.39$	$3.0 < p < 4.76$ $12 < \alpha < 19$
D	$34\overline{56}$	$E_3 > 0.39$ $E_4 > 0.3$	$4.76 < p < 15.0$ $19 < \alpha < 60$
E	$245\bar{6}$	$E_4 > 0.3$ $E_5 > 0.39$	$15.0 < p < 22$ $60 < \alpha < 90$
F	$\bar{3}45\bar{6}$	$E_4 > 1.2$ $E_5 > 3.0$	$22 < p < 100$
G	$45\bar{6}$	$0.3 < E_4 < 1.2$ $E_5 > 0.39$	$1 < e$
H	$\bar{3}4\overline{56}$	$E_4 > 0.3$	$e < 1$
I	2,3,4,5,6		Singles

detector be less than 10^{-15} C. In addition, it is unfortunately the case that the noise spikes produced by most dc-to-dc converters have a waveform very similar to that of the particle detector pulses.

Figure 22, which shows a typical detector with its charge-sensitive preamplifier, illustrates the situation that occurs when noise exists between the electronic ground and the case ground, to which the particle detector shield is connected (for structural reasons). If we assume that, after taking all reasonable precautions, the stray capacitance C_s is 1 pF, the maximum allowable ground-to-ground signal is approximately 1 mV. Also important is the fact that since the capacitance of the thin detectors is on the order of 100 pF, this implies that noise induced on the ground return from the detector case to the preamplifier must be less than 10 μV.

X. Protection From EMI

Sensitivity to EMI was reduced by using an inner electrostatic shield in addition to the package covers, which served as an outer shield, and by multiple filtering of the power supply voltages.

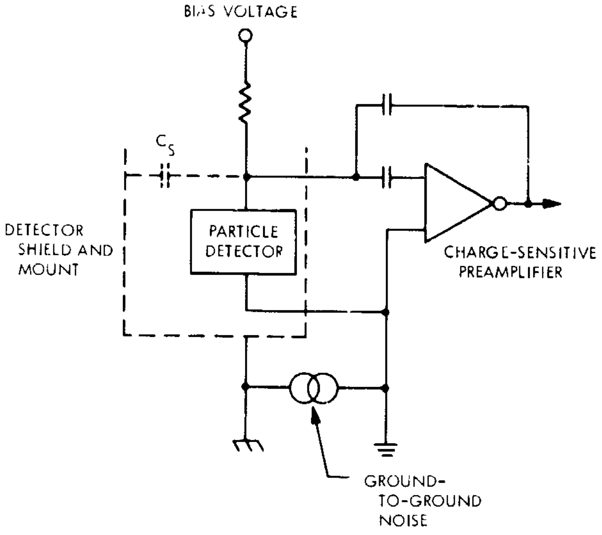

Fig. 22. Equivalent circuit of a particle detector and preamplifier showing the effect of noise between the chassis ground and the electronic ground

A. The Inner Shield

The inner electrostatic shield can be seen in Fig. 23 inside the package cover. It consists of a gold-plated beryllium copper sheet attached to the cover by thermosetting Mylar tape. Multiple spring-loaded fingers on the inner shield contact the ground plane on each printed circuit board. The edges of the printed circuit boards are plated with gold over copper to facilitate this connection. The result is that when the package is assembled, the circuitry on each board is enclosed in its own electrostatic shield at *electronic* ground potential. Interference from noise on the case ground is thereby greatly reduced.

B. Power Supply Filtering

Power supply filtering is performed in several stages. The input filter configuration, shown in Fig. 24, consists of a series inductive filter obtained by the use of a multiple-wound toroidal transformer followed by capacitive shunt elements. It can be shown that for ground-to-ground noise, which is generally the most troublesome, the transformer has the decoupling effect of separate series inductances. In addition, however, the mutual coupling of the transformer ensures that the supply voltages, including electronic ground, are locked together. Also, since the net dc flux in the core is zero, one may benefit from the large inductance per turn of a toroid without risking saturation of the core.

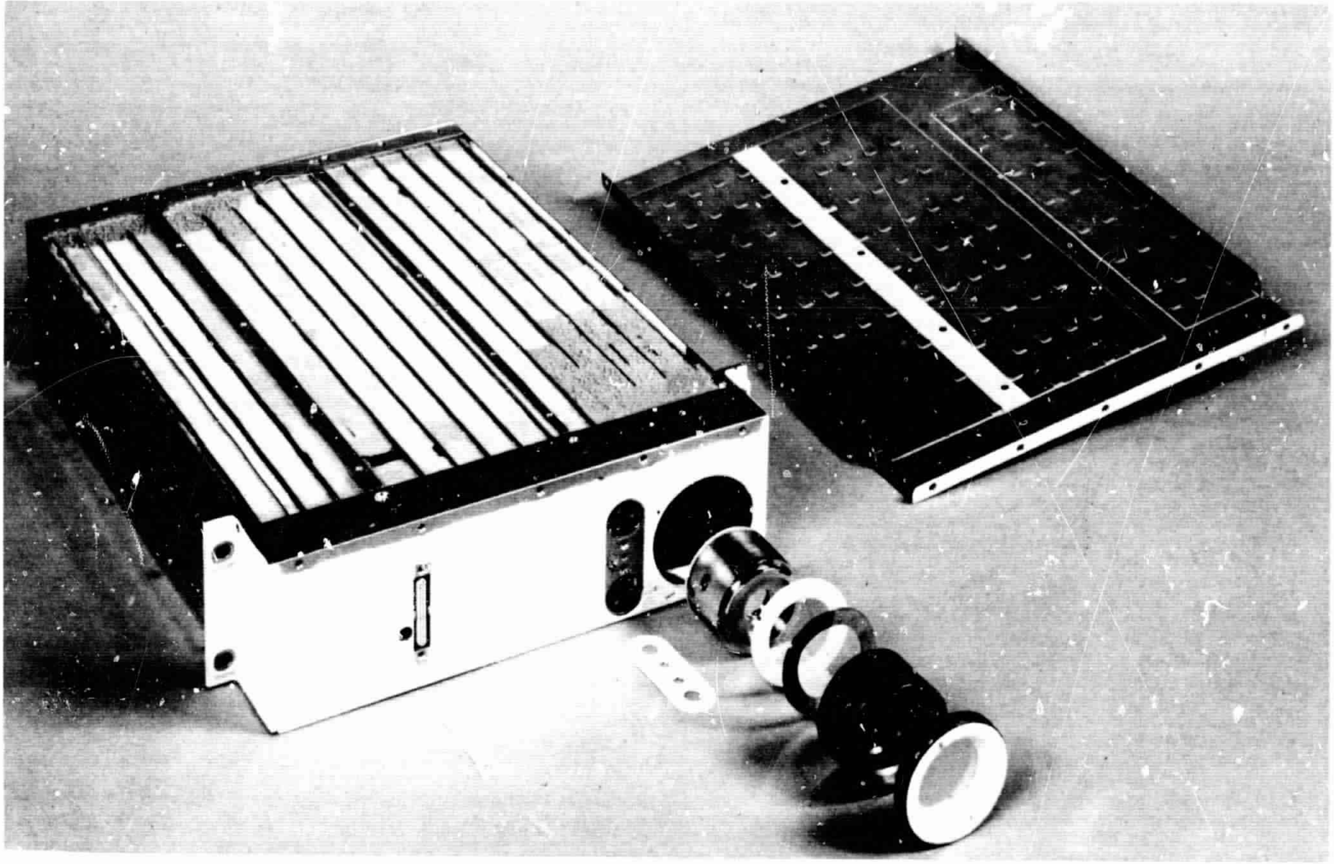

Fig. 23. Photograph of the experiment package showing the inner shield in the cover

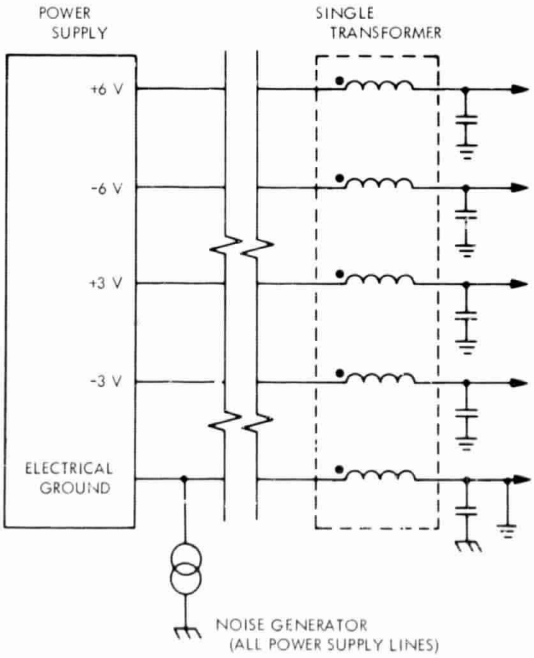

Fig. 24. Diagram of the particle experiment power supply filter

A design feature of the experiment is that it is largely made up of four types of general-purpose thin-film hybrid modules (Ref. 2). Awareness of the need for good filtering resulted in the inclusion of power-supply filtering on every module. A module with solid tantalum filter capacitors is shown in Fig. 25. The amplifier module also allows the supply voltages to be fed through each amplifier in a chain back to the preamplifier, thus filtering the voltages to low-level amplifiers several times in cascade. The fact that each chain has separate filters also eliminates cross talk on the supply lines.

Besides making shunt filters more effective, series decoupling has another important advantage from the EMI standpoint. Since the source impedance of most satellite noise generators is extremely low, an attempt to use shunt filtering alone results in very large noise currents. These are undesirable even when flowing in a system of power supply lines which have been twisted in order to keep the area of the current loop small. In the case of ground-to-ground noise, however, the area of the loop is undefined because the return path of the current through the satellite frame is not known. Thus, the dual ground system eliminates dc dipole moments, but greatly enhances ac magnetic noise. Series decoupling can reduce the noise currents by orders of magnitude. It might be well to consider the specification of a minimum allowable impedance that a package may present between power supply leads as an effective way of combating magnetic noise in any spacecraft containing broad-band magnetic sensors.

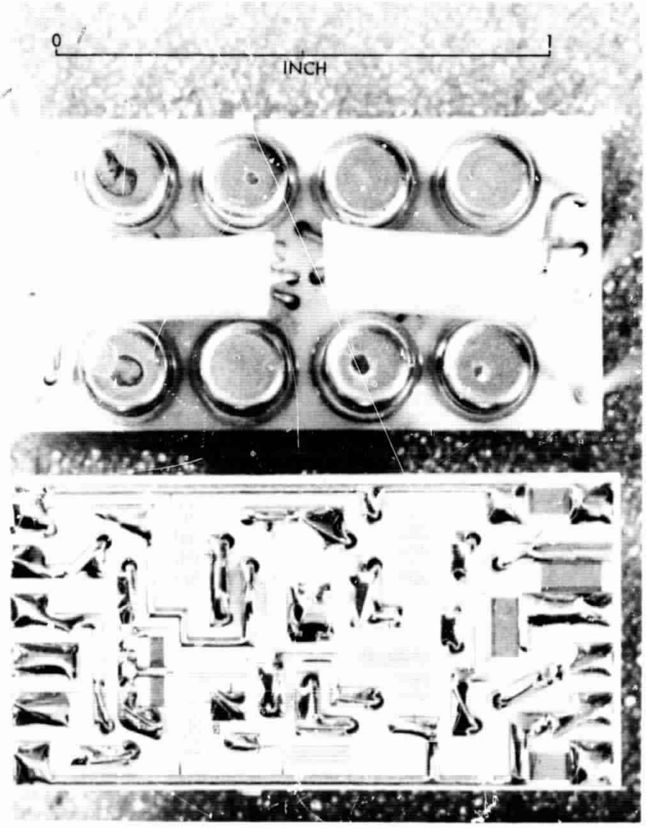

Fig. 25. Thin-film amplifier module, showing individual filter capacitors

XI. Detector Bias Supply

Detector bias voltages of from 50 to 200 V are generated in the experimental package by redundant chopper converters and Cockroft-Walton voltage multipliers driving common filters. Because the converters are in the same package as the VLF experiment, a converter frequency of 300 kHz was chosen. This lies above the upper frequency detected by the VLF experiment yet away from its IF frequency and below the sensitive region of the particle experiment. The converter transformers were also resonated at 300 kHz so that their output was nearly sinusoidal, thus greatly reducing harmonics which could have interfered with the particle experiment.

In addition, however, synchronization of the two converters was found to be necessary. When the converters were allowed to run at slightly different frequencies, a beat frequency of a few kilohertz was produced, which the filters, designed for 300 kHz, were incapable of handling.

The difficulty above points out the danger of assuming that because each individual supply in a system runs at a frequency above the band in which the experiments operate, that there will be no interference at lower frequencies. Leaving aside the possibility of detection of the difference frequency in a nonlinear mixer, it should be noted that power will be generated at the difference frequency if any nonlinear interaction of the chopping frequencies occurs. A duty cycle regulator driving a dc-to-dc converter is an example of a situation in which such mixing is likely to occur. Thus, the safest approach is to synchronize the converters.

XII. Conclusion

If our experience is to be of any use to others perhaps this experience can be distilled in the following way:

(1) Double ground systems (one for the electronics and one for the frame or chassis) can lead to problems of two kinds:

   (a) Noise generated *between* the two grounds can couple into amplifier inputs in a very serious way.

   (b) Capacitive coupling between the grounds can lead to the possibility of large ac ground current loops of undefined and variable properties. (This has particular relevance to VLF experiments.)

(2) In connection with the generation of large noise currents, particularly in double ground systems, it would be advantageous to demand that power supply and ground circuit impedances be not less than some specified minimum value.

(3) The noise problems of unsynchronized low-frequency power converters rapidly become more severe as their numbers increase. It is important to note that it is possible for spurious signals to be generated not only at the harmonics of each converter but also at sum and difference frequencies both above *and below* the converter fundamentals (Ref. 3).

(4) Radio experiments should only be flown on vehicles specifically intended for such purposes.

(5) In any radio experiment the use of multiple antennas can confer considerable advantages.

(6) There is no substitute for noise surveys carried out with a sensor similar to the one to be used in the actual experiment.

It may be of interest to note that although the electrical interference problems discussed in this paper relate to two specific experiments on one spacecraft, in fact similar problems exist on practically *all* vehicles. Experience on roughly a dozen different satellites has convinced us of this fact, and has indicated the urgent need for much more careful consideration of the *entire* spacecraft signal, power and grounding systems at the earliest planning stages.

In part the difficulty is historical in that the techniques for monitoring and controlling interference have simply not kept up with the rapid increase in the gain and sensitivity of experiments over the last decade.

Just what action should be taken at this time is not clear, but the fact that action is urgently needed is obvious to anyone who has been associated with any experiments on a satellite in recent years.

Acknowledgments

So many people have contributed to the experiments described here that it is not feasible to list them all. However, we would be remiss if we did not point out the special role played with respect to EMI control by R. A. Boie and I. Hayashi in design, D. A. Robinson and R. W. Kerr in testing, and the outstanding cooperation of the Westinghouse team of E. J. Dragon, F. McNally, W. King, M. Einsel, J. Ramsey, and W. Norris in integration and checkout. Finally, it is a pleasure to acknowledge the major contribution of W. L. Brown to all phases of this work, particularly in remaining optimistic in the face of the worst possible EMI problems.

Discussion

Larry Pangburn: Did you do any evaluation of the multifilar transformer you built? I don't know whether to call it frequency response or what, but you talked about it being effective for spikes.

G. L. Miller: Yes, the spikes were of the order of a microsecond wide and 0.5 V high. The inductance of the cores was 150 μH. The ferrite material is nominally good up to about 10 or 20 MHz. The number of turns on the cores was very small, which means that the stray capacitance across the core, which you have to keep out. was also very small. There were only four turns on these cores. We didn't carry out any direct frequency response checks, but my feeling would be that it looks like 150 μH up to about 10 MHz, where it starts to roll off, shunted by some small fraction of a picofarad. It's certainly an effective way to handle that problem, anyway.

George N. Burkhardt: I was wondering about the laboratory measurements you showed with a sun simulator and without a sun simulator. Did you experience any problems from EMI being radiated from the sun generators? My experience is with sun simulators on the order of magnitude of one sun, and the problems have been numerous.

Discussion (Cont'd)

G. L. Miller: I'm afraid I can't answer that question. I guess we can't really say what those curious spikes that we saw at one antenna input were. They might have been associated with something else in the system. We don't see them in space when presumably the sun is on.

George N. Burkhardt: I'd like to make a general comment. I'm glad to see the scientific people interested in making comments about the current state-of-the-art requirements for the performance of systems. I think the conventional systems tests, per se, are not adequate to deliver a clean, totally compatible bird for this type of experiment. Unfortunately, I personally have never been associated with an experiment with sensitivities in the orders of magnitude that have been depicted today. I say unfortunately, from the standpoint that I suddenly realize I have a tremendous amount of catching up to do. A tremendous amount of attempting to push the state of the art into higher and higher orders of performance. I think the problems that we generally see and have generally been accustomed to curing, as I've attempted to point out, are simply basic, neglected good engineering practices. Even these areas appear to be. The techniques that we're using are not being forced down to the level of total reduction. We're minimizing to acceptable limits. We've always attempted to get "noise-free" as absolute terminology out of specifications and to use the word "minimize" to the state of the art. I think it presents a problem to the EMI people and I for one definitely feel that there's a new era coming. We should be actively involved in this area immediately. A little closer association with the scientific experiment people will probably give us a good base line to go forward from this point.

Ben Weinbaum: I'd like to share Mr. Burkhardt's sentiment. We have problems in integrating scientific experiments in spacecraft. We've had the same problems when we've been trying to integrate lower stage vehicles. This is something that's been going on for some time. I remember years ago on our *Atlas* program we had flown with a so-called radio inertial guidance system. It was fairly satisfactory and then we decided we would fly with an all-inertial guidance system that embodied the use of a large number of digital circuits. Then it went very poorly until we solved our problems. In the initial design for this new system, the out-of-band, undesired, and undesigned characteristics were never adequately considered in such a manner as to preclude problems when we were well into the hardware phase. So we learned from that horrible example, and there have been a number of horrible examples. My hope is that perhaps the gentlemen in the scientific community can more eloquently express the need for real systems engineering that embodies this total problem including the out-of-band, unauthorized, and undesired characteristics that we have to deal with in these systems.

G. L. Miller: I think that the scientific community is very skilled in expressing needs. I agree with you.

William Lash: I'd like to remind everbody that once a year there's a national symposium on electromagnetic compatibility sponsored by the IEEE. I know I'm speaking for the committee in inviting all of the experimenters. I think we've classified ourselves as the EMI people and the experimenters, but I hope we really haven't. We think this would be a tremendous platform for the experimenters to present papers and present all of this information to the EMI fraternity, as we fondly call ourselves. I think we have put the blinders on ourselves for certain specification requirements. I think this, here, is the unblinding operation. From this particular workshop, we should be able to expand tremendously.

Robert W. Ellison: I'd like to express a little amazement that the problems on spacecraft have 30 dc-to-dc converters whereas we're currently involved with one that has 74 below the payload. The nature of the phenomena that you are describing seems to be very similar to the observations we are having—not only with the booster but also with the computerized AGE equipment used to check it out. The ground-to-ground problem is the one that's really biting us right now.

Robert O. Lewis, Jr.: It seems that this instrument you have is a spectrum analyzer. Could you give us the resolution capability and bandwidth?

G. L. Miller: All the credit for that instrument of course goes to the commercial designer, who is Ross of Nelson-Ross. I don't remember the number of the instrument, but in the Nelson-Ross catalog you'll find they make one plug-in, low-frequency spectrum analyzer, which is the one we used. It has an adjustable bandwidth; the maximum value is, I think, 9 kHz, and the minimum is something on the order of 100 Hz. It spans the frequency range from 0 to 500 kHz. I do not recall what the input equivalent noise is, but it was very low; we never had any trouble with it.

References

1. McDonald, G. M., "Instrumentation Problems Caused by Common Mode Interference Conversion," *IEEE Trans. Electromag. Compat.*, EMC-8, No. 1, pp. 17-24, March 1966.
2. Curran, F. E., et al., "A Modular Set of Analog Microcircuits Intended for Satellite Experiments," *IEEE Trans. Nucl. Sci.*, NS-13, No. 1, pp. 326-335, Feb. 1966.
3. Gurnett, D. A., *Reducing Radio-Frequency-Interference From Spacecraft in the Frequency Range From 20 Hz to 200 kHz*, R-67-32. University of Iowa, 1967.

PRECEDING PAGE BLANK NOT FILMED.

N69-25437

OGO Spacecraft Electromagnetic Interference in the 50-kHz to 4-MHz Frequency Range[1]

Robert G. Peltzer
University of Michigan
Ann Arbor, Michigan

I. Introduction

The *Orbiting Geophysical Observatories* (*OGO*) were originally conceived as three-axis-stabilized "streetcars" accommodating many different types of experiments and allowing "passengers" to get on or off with little or no modification to the spacecraft. From 20 to 30 experiments can be carried, and analog and digital PCM telemetry capability and power sufficient to satisfy most reasonable requirements are furnished. These observatories can be placed in two broad classes. The elliptical *OGO* (*EGO*) has a highly elliptical orbit with an apogee of about 100,000 km and a perigee of 300 km. The polar *OGO* (*POGO*) has a more circular orbit, with an apogee of about 1000 km and a perigee of 250 km. Orbit lifetime is one year.

At the time the *OGO* program was initiated there was no indication that radio astronomy measurements would or could be made from any of the observatories, which were essentially designed for particle experiments. Since there would be no radio science experiments aboard there was no need to seriously consider EMI. This design philosophy led many particle counter experimenters to believe that digital experiments would not be affected by EMI. In-orbit operations of these experiments alerted some of the more astute experimenters to the EMI problem. By the time *OGO-E* was being tested, the particle experimenters were calling for EMI testing in concert with the ac fields experimenters.

II. Spacecraft Description

A. The Spacecraft as an EMI Generator

The interference-generating capability of the spacecraft became apparent in early 1962 when the first radiometer was plugged into the first spacecraft simulator. The most obvious potential sources of interference were the transmitters, which have the following characteristics:

(1) Wideband: 4 W at 400.020 MHz with PCM/FM/PM modulation.

(2) Special purpose: ½ W at 400.850 MHz with either FM/PM or PCM/PM modulation.

(3) Beacon transmitter: 136 and 120 MHz at 10 W.

(4) NBS radio propagation experiment: ⅓ W at 40 MHz and ⅒ W at 360 MHz.

---

[1] The work described was conducted under NASA/Goddard Space Flight Center contracts to the University of Michigan Radio Astronomy Observatory under the direction of Prof. Fred T. Haddock. The investigations were carried out by George S. Cohen, Bobby G. Finsh, Wilbur J. Lindsay, Dennis Walsh, Robert G. Yorks, and Robert G. Peltzer.

(5) The range and range rate transponder operates in the VHF and SHF bands but contains internal signals from 1.2 to 3.2 MHz at power levels of less than 10 mW. The phase-modulated received frequencies are between 4 and 100 kHz.

The data handling system operates at 1, 8, and 64 kbits/s for *EGOs* and at 4, 16, and 64 kbits/s for *POGOs*. The associated pulses are nominally 7 V high. The pulse characteristics are as follows:

(1) Timing signals have repetition rates from 0.01 Hz to 1 kHz in steps of 10 on the first two *EGOs*. These signals are not in synchronization with the data handling system in the normal sense. On *OGO-E* the timing signals are in synchronism. The pulse width is 20 μs with a 5-μs rise time and a 15-μs fall time.

(2) The shift pulse width is ¾ μs with a ⅕-μs rise time and a 1-μs fall time.

(3) The inhibit pulse has a rise time of 1 μs, a fall time of 8 μs and a pulse width which is dependent on the telemetry data rate and ranges from 9000 μs at the 1-kbit/s rate to 140 μs at 64 kbits/s.

(4) The 400- and 2461.5-Hz synchronization signals for power conversion are 6-V peak-to-peak square waves with less than 2 μs rise and fall times.

It should be added that the digital designers did their job well and produced much faster rise and fall times. Unfortunately, a great deal of ringing was present on almost all of the pulses. Ringing pulses are good indicators of mismatched transmission lines with their associated high VSWR. This condition was observed on the prototype but never corrected. The pulse driver power consumption would be raised considerably if the drivers were designed to operate into matched loads.

The power converters on the spacecraft are heavy interference generators. Although all on-board converters are synchronized to one frequency, some units use pulse-width modulation for regulation and others use current switching; but they all switch in one manner or another. The switching transients so generated provide a wealth of undesirable radio frequency energy. A great deal of effort was devoted to pinpointing the sources of interference on the *OGO-III* spacecraft. Converters were disconnected, filtered, spectrum-analyzed, etc., in an effort to isolate the worst offenders. They were all bad, but converter 2 was the worst. In tracing the design history of converter 2, I found that the noise generated in the converter caused erratic operation. This particular problem was solved by adding a capacitor between the output and the input instead of reducing the noise which caused the problem.

B. The Spacecraft as an EMI Distributor

After briefly describing the signals generated in the spacecraft, it is appropriate to look at the spacecraft wiring to see how these signals are distributed.

Weight limitations affected the choice of wire and cable used in the spacecraft. Wire sizes were reduced to save weight. Shielded wires and coax were of the flat braid type instead of the heavier round braid with its inherently better shielding qualities.

The original single-point-ground concept required that all signal lines be shielded, but in this application the shield could not be grounded at the receiving end, the return being through a separate common return. A change to the skin ground concept in late 1963 required that all shields be grounded on a halo ring at the receiving end.

The timing, inhibit, and shift signal lines were coaxial cable. Twisted-pair shielded wire was requested for the inhibit pulse lines in late 1963 but was never supplied. Converter synchronization signals were carried by twisted-pair shielded cable. Power was carried by a twisted-pair cable.

The power supply impedance was specified to be less than 1 Ω at dc but could go as high as 4½ Ω at 50 kHz.

The spacecraft instrumentation unit gathers housekeeping data from within the body of the spacecraft and from all appendages. This unit is powered by converter 2 which, as you will recall, is the noisiest converter on the spacecraft. The experiments in the appendages are connected to the spacecraft by wire harnesses that are within the booms but must break out of the booms to go around the hinges, into the spacecraft body, and into the experiment package.

The *OGO* spacecraft has very large solar arrays that are dc-isolated from spacecraft ground to prevent a shorted module from destroying a whole string of modules. The arrays were also ac-isolated until protests resulted in placing 0.01-μF coupling capacitors and 1-kΩ resistors across the isolator. The wiring on the back side of an array resembles a Christmas tree, the main trunk being the cable bundle down the center of the array.

C. The Spacecraft as a Container of EMI

Since the observatory was conceived as a general-purpose spacecraft, adequate attention was not given to "good engineering practice" employed by experienced radio frequency engineers. This became apparent the first time we saw the prototype spacecraft. The structural materials were mainly aluminum and magnesium which were anodized and/or painted after fabrication and before assembly. The workmanship and anodizing process were excellent, as could be observed by the anodized threaded holes, hinges, and all contacting surfaces. Unfortunately, the result of anodizing is a spacecraft that consists of electrically disconnected bits and pieces. This was particularly disconcerting to our experiment because the spacecraft is the counterpoise for our monopole antenna and as such should be a continuous electrical surface.

A great deal of work was done on the prototype to tie the skin together. This was very difficult because the anodizing had to be removed and replaced with gold plating or irriditing. At this time, further problems with bonding were not expected. But it was found that meticulous attention must be paid to all mating surfaces if good bonding is to be achieved. This point cannot be overemphasized since bonding problems on the *OGO-IV* spacecraft are still present four years after the problem was recognized on the prototype.

Weight restrictions can bring strange design results. For example, the spacecraft analog and digital data handling assembly (ADHA and DDHA) cases are made of plastic. One digital experiment on *OGO-E* did not have a cover on it.

The dc-to-dc converters supply the multitudinous equipments with the energy to perform their functions. It is reasonably obvious that these converters are necessary and that switching is inherent in converter design. The suggested approach in this instance is to carefully shield each converter and adequately filter every line that passes through the shielding. Several experimenters requested that the spacecraft converters be shielded, filtered, and/or redesigned in the latter part of 1963, but money, time, weight, reliability, and schedule conditions were always given as reasons for not doing anything about the situation.

The cable runs to experiments and subsystems outside the body of the spacecraft were not originally shielded or filtered and therefore were fully capable of conducting interference from the inside to the outside of the spacecraft and radiating it. The solar arrays provide an illustration of this phenomenon. Although we had always maintained that the solar arrays were large antennas that were radiating the interference that was being conducted out of the spacecraft on the array power lines, we had no proof, and in 1963 when we requested filters for the array harness, reliability considerations were given priority and the lines were not filtered. The array radiation was proven conclusively on *OGO-III* during tests in July 1965, and thereafter the main solar array harnesses on all spacecraft were shielded with aluminized mylar to reduce EMI.

It should be stated that containment of electromagnetic energy is a difficult operation at best and can easily become an insurmountable problem. Both containment and good design techniques are needed to achieve low interference levels.

III. Brief Experiment Descriptions

A. *OGO-I* and *OGO-III*

The purpose of the *OGO-I* and *III* experiments was to record and measure radio noise incident upon an electrically short, partially unbalanced dipole antenna in the 2- to 4-MHz frequency range. There were several scientific objectives of this experiment partly because of the lack of knowledge of the natural radio emissions in interplanetary space at these frequencies (2–4 MHz) and the effectiveness of sweep-frequency receivers in identifying the source of radio emission. Ground-based sweep receivers have proven capable of quick identification of radio signals from man-made devices, lightning, various solar bursts, and bursts from the planet Jupiter. This feature partially compensates for the lack of angular resolution when using a short dipole antenna and greatly aids in the deduction of generation processes involved in the radio emission.

The prime scientific objective of the experiment was the measurement of the dynamic radio spectra of solar and Jovian bursts. The parameters of interest were frequency–drift rate, bandwidth and duration of bursts.

The electrically tuned sweep-frequency receiver consists of three parts located in two positions on the spacecraft. The antenna unit and the RF unit with calibrator, local oscillator, function generator, mixer, and IF filter are all located in the solar experiment package (SOEP) No. 1. The IF amplifier-detector unit, power supplies, logic unit, and checkout circuitry are located in the main body of the spacecraft. The receiver sweeps the 2–4-MHz band every 2 s and has a tangential sensitivity of 1–3 μV over the band. The IF crystal filter bandwidth is 20 kHz; the postdetection time constant is 3.4 ms.

The spurious rejection below 2 MHz is between 35 and 55 dB and increases to a minimum of 65 dB above 4 MHz.

B. OGO-*II* and OGO-*IV*

The *OGO-II* and *IV* radiometer system was designed to provide the first map of the brightness distribution of cosmic radio noise over the sky at 2.5 MHz.

Although an electrically short antenna was flown, useful directivity is expected from the theoretically predicted "ionospheric focusing" of the beam of an antenna immersed in the topside of the ionosphere. This directional array is produced by the variation in refractive index which is due to the change in electron density with altitude. Theoretically, the beam has zero width at the point at which the local plasma frequency is equal to the receiving frequency. A beam with half-width less than 20 deg can probably be achieved.

A map of the sky will be built up from a series of spot measurements as *POGO* passes through the penetration levels for the frequencies of observations. By suitable choice of orbital parameters (principally 82-deg inclination) a comprehensive degree of sky cover should be obtained.

The *POGO* radiometer system consists of a 60-ft monopole antenna, a calibrator, and a 3-channel receiver with a common broadband preamplifier. The three channels are (1) a primary cosmic noise channel, (2) an antenna impedance channel operating at the center frequency of the primary channel, and (3) an auxiliary cosmic noise channel. The local oscillator operates at 2.5 MHz and is crystal-controlled.

The primary channel operates as a superheterodyne receiver at 2.5 MHz and has a zero IF bandwidth of 90 kHz and a postdetection time constant of 0.5 s. The receiver sensitivity is about the same as the *OGO-I* and *III* sweeping receiver.

The impedance channel operates at the 2.5-MHz center frequency of the primary cosmic channel. The signal to the unknown impedance (the antenna) is derived from the local oscillator. The unknown impedance is measured by sine and cosine detectors.

The third channel is an auxiliary cosmic noise receiver operating at 2.0 MHz with a bandwidth of 35 kHz and a postdetection time constant of 0.5 s. This receiver is essentially a tuned radio frequency (TRF) receiver.

The 2.5-MHz fixed-level calibrator signal gives a gain check of the 2.5-MHz channel and also checks the impedance channel alignment. The 2.5-MHz channel spurious rejection was 45 dB from a few kHz to 250 MHz except for a 33-dB rejection at 130 MHz. The 2-MHz TRF channel spurious rejection was 40 dB except for a 25-dB rejection at the two prime images of 3 MHz and 4.5 MHz and a rejection of 30 dB at 130 MHz.

C. OGO-*E*

The scientific objectives of the *OGO-E* experiment are to extend the radio frequency measurements of solar and Jovian bursts down to 50 kHz and to extend the low-frequency measurements of the cosmic noise spectrum by several fold.

The radiometer for this experiment consists of a stepping superheterodyne receiver having a center frequency tunable from 50 kHz to 3.5 MHz in 8 geometrically spaced steps which can be controlled by ground command.

The antenna was to be a 60-ft self-erecting model, as used on *POGO*, but spacecraft stability problems have caused the antenna to be reduced to 30 ft.

The radiometer system consists of an input filter, broadband preamplifier, oscillator, IF crystal filter, detector, noise calibrator, and control logic.

The IF crystal filter bandwidth is 15 kHz and the postdetection time constant is 0.2 s. The system sensitivity is about 10 dB better than the sweeping radiometer. The radiometer spurious rejection is at least 60 dB from 10–18 MHz and greater than 80 dB elsewhere.

IV. Testing

A. Ground Testing for EMI

To emphasize the high level of interference expected on the ground from man-made transmitters, it is sufficient to report that good receiver design requires that the limiting field intensity levels for good reception be only 25 μV/m at 0.1 MHz and 1 μV/m at 1 and 5 MHz.[2] These values are from 20 to 500 dB above the radio astronomy radiometer detectability levels and would constitute serious interference during ground checkout tests.

Furthermore, one reference[3] gives median values for suburban man-made noise in the 2- to 4-MHz band of about 2×10^{-5} V/m and in the vicinity of cities of about 10^{-4} V/m. The latter value is 60 dB above the radiometer detectability level.

For values quoted above, it should be clear that it will not be possible fully to check out the satisfactory performance of the radiometers in an unshielded environment on the ground. This is especially so near a large city in the U.S. A partial checkout may be possible by working at times of low local noise levels and by identifying the source of the interference.

In late 1962 we requested that serious consideration be given to the possibility of locating the *OGO* spacecraft in a shielded enclosure of large volume to permit adequate test of the radiometers. A large underground cave or cavern would have been best from the point of view of receiver performance, since a small metallic shielded enclosure or room would effectively short-out the receiver input and modify the receiver performance characteristics. In designing and testing a University of Michigan rocket experiment it was deemed necessary to place the entire scientific payload underground (the International Salt Co. mines near Detroit were used) to obtain a sufficiently low ambient noise level (less than about 10^{-7} V/m) to insure that neither the auxiliary equipment nor the telemetry transmitter was interfering with the low-noise radiometers.

A large effort was made on the part of the University of Michigan to survey potential test sites. Among the sites surveyed were the TRW magnetic test site at Malibu (Calif.), the large dirigible hangar at Moffett Naval Air Station in Mountain View (Calif.), the TRW M-1 building in Redondo Beach (Calif.), the center of the Joshua Tree National Monument 60 miles southeast of Los Angeles, screen rooms at TRW and GSFC, the proposed TRW magnetic test site near Capistrano (Calif.), salt mines in Louisiana and Detroit, and, finally, the GSFC magnetic test site.

In comparing the open air sites it was found that the Malibu site was about the same as the Joshua Tree National Monument but was at least 10 dB noisier than Capistrano or GSFC. It should be pointed out that neither Capistrano nor GSFC was developed for testing when the survey was made.

In comparing the shielded sites, the salt mines were far superior to all but the screen rooms. The dirigible hangar was slightly better than the M-1 building when both buildings were all but deserted.

The University of Michigan radiometer systems are always subjected to self-interference tests in the International Salt Co. mines near Detroit. The tests are conducted to assure a stable design and determine if and where additional filtering is required. These tests have always been extremely valuable in determining how the system will operate as a whole.

B. Spacecraft Testing

Each of the *OGO* spacecraft has been tested in several ways. Informal testing generally begins when the experiment is integrated with the spacecraft and continues until launch. The test conditions are far from ideal but these tests are extremely valuable in that they uncover many interference sources early enough to incorporate fixes before the formal tests. The formal tests are much more extensive and controlled.

The discussion that follows is devoted to spacecraft-generated interference. The interference generated by experimenters was generally controllable and of a less serious nature.

1. OGO-I and prototype. The prototype spacecraft was tested in conjunction with *OGO-I*. *OGO-I* was formally tested in the M-1 building high-bay area at TRW and again at Malibu. Prior to these tests, many short informal tests were conducted to determine the optimum filtering, shielding, and placement of the harnesses in the SOEP to reduce the interference that was entering the

---

[2] As determined from the U.S. Dept. of Commerce, NBS, Letter Circular LC 615.

[3] *Reference Data for Radio Engineers*, 4th Edition, International Telephone and Telegraph Corp., 1956.

radiometer there. A great deal of spacecraft testing resulted when it was proved that millivolts of a 10.7 MHz signal were being coupled into the IF amplifier in the main body of the spacecraft through the shield of the interconnecting coaxial cable. These tests were carefully documented and were conducted many times in many ways for the benefit of TRW and NASA personnel who would not believe that the interference levels inside the spacecraft were so high. Measurements in the screen room by TRW at 1 ft from the buttoned-up spacecraft were 1 mV broadband noise for a 20-kHz bandwidth in the 2- to 4-MHz band. Measurements of the interconnecting cables with a 10-kHz bandwidth Empire Device RFI meter were 1–15 mV at all frequencies between a few hundred kHz and 25 MHz. Triaxial cable had to be used to reduce this interference significantly. As a result of subsequent EMI tests by TRW, the single-point grounding concept was abandoned and an attempt was made to ground shields and to tie the spacecraft skin together.

The TRW high-bay test showed that several converters were noisy. Some of the converter covers were replaced with copper shields for the benefit of the ELF (extremely low frequency) and VLF (very low frequency) experiments. The benefit of this test to the experiment was not as great as it could have been because of the EMI generated by the Telemetrics (Lear Siegler, Inc.) ground station which was used to obtain data from the spacecraft. The Malibu test was strictly a monitor test since no fixes were allowed during or after this test.

The in-flight interference levels were never established because the motorized antenna failed to erect.

2. *OGO-II.* *OGO-II*, the next spacecraft, was also tested in the TRW high-bay area and at Malibu. The high-bay test was seriously compromised by the Telemetrics ground station interference, which had also affected the *OGO-I* test.

The Malibu test indicated that the spacecraft wide-band transmitters were interfering with all of the fields experiments only when the transmitter was modulated. This problem was studied further but never resolved.

The in-flight interference levels were 10 dB above the expected free-space levels with an undeployed antenna. When the antenna was deployed, the interference level was 25 dB above the expected free-space level.

3. *OGO-III.* *OGO-III* was the third of the *OGO* series and was handled differently in that it was integrated, tested, and launched by a GSFC crew because of the heavy work load at TRW. A fair amount of testing was done in the large screen room at GSFC before, during, and after conducting the two Observatory Deployed Interference tests (ODIT) at the GSFC magnetic test site. This testing was conducted with the solar arrays on the spacecraft. All Malibu tests were conducted without the solar arrays. During these tests, the experimenters were given great latitude and support in the conducting of the test. I had literally every converter and data subsystem disconnected at one time or another during the test. All boom and solar array harnesses were selectively disconnected. By the time this test was finished a good understanding was had of where the interference was coming from and how it was being distributed and radiated. Subsequent tests in the screen room confirmed all of the test findings. Early testing revealed that the spacecraft subsystems and mechanical assemblies were not bonded together or to the spacecraft. A great deal of effort had to be expended to bring the spacecraft up to bonding specifications.

The interference level observed at the end of the second ODIT test was 7–8 dB above the expected free-space cosmic level. This level was observed with a 20-ft antenna, a filter on converter 2, and with the solar array harness wrapped with 1-mil-thick aluminum foil. The interference level was 12–14 dB lower when the solar array harness was disconnected.

Tests indicated that the interference was reduced by less than 3 dB when the converter 2 filter was used. This filter actually suppressed converter noise by at least 20 dB, but the contribution by all of the other converters masked the filter results. To reduce the interference levels further, all of the converters would have had to be filtered. Ultimately, the spacecraft was flown without any filters so that reliability would be preserved. The aluminum-foil-wrapped solar array harness was flown.

The attitude control system was never tested fully because the ground support equipment was prohibitively noisy.

The interference level observed in orbit is between 15 and 20 dB above the expected cosmic level with all other experiments turned off. The level doesn't change significantly when the experiments are turned on, the NBS transmitter being the exception.

*4. **OGO-IV**.* *OGO-IV* was tested at Malibu under conditions that were similar to those of *OGO-III* and, in addition, the test was supported by a professional EMC crew. We found many of the uncorrected *OGO-I, II,* and *III* interference sources and again, for reasons previously stated, couldn't get filters for the converters and solar arrays. The wideband and special-purpose transmitters interfered with the experiment. The problem was previously studied on *OGO-II* and no solution was found. Fortunately, the wideband transmitters are off for a high percentage of the orbit. The special-purpose transmitter interference will be alleviated somewhat by turning this transmitter off every third orbit.

The *OGO-IV* spacecraft had to have considerable work done to bring it up to the spacecraft bonding specifications. To provide a better RF ground, 0.25-μF capacitors were added between the isolated SOEP and the solar array.

The interference level in orbit is about 10 dB lower than it was on *OGO-II* but is still 15 to 20 dB above the expected free-space level. The wideband transmitters add another 5–10 dB to the 2.0-MHz channel, but the 2.5-MHz channel is hardly affected.

*5. **OGO-E**.* The *OGO-E* program adopted a fresh approach to the EMI problem. The specifications for experiments contained guidelines for good design and placed restrictions on the use of some frequencies. In addition, TRW supplied an EMC group to subject the experiments to susceptibility tests and to measure the spectrum emitted by them. This was an excellent service but suffered because much of the experiment was delivered so late that it did not have time to pass through the EMC lab.

The subsequent testing of the *OGO-E* spacecraft was very similar to *OGO-IV*. The results, fixes, and reasons for not fixing were also the same as *OGO-IV*. Next month, when the *OGO-E* spacecraft is tested in orbit we will see how well we have done.[4]

C. Further Comments on Testing

Throughout this entire test sequence the *OGO* program was operating under extreme pressures of flight schedules and money. The test results and subsequent fixes were always less than desirable. I often wonder if we wouldn't have spent less money and time and received better experiment data if we had corrected the interference sources which were predicted and found on the prototype spacecraft. You probably noted some repetition in the test descriptions given above. Filters for the converters and the solar arrays and/or design of the converters were requested in 1963, 1964, 1965, 1966, and 1967. The requests were always denied on the basis of the schedule slip to that particular spacecraft, reliability, or money.

We have always had to operate with nonflight configurations, which imposes a handicap. The results of ground testing do not correlate with flight test data. The spacecraft test configuration is one reason for this. Another can be found by looking at what happens to the spacecraft from the time it leaves the EMI test site with its temporary fixes until it is injected into orbit. Past history indicates that about 30% of the spacecraft subsystems will be replaced before launch. The experience with the first four spacecraft indicated that about 30% of the experiment packages were changed before flight. On *OGO-E* this percentage jumped to about 90%.

V. Good Design and Test Procedure

A. Design

In a broad, general sense, a system that functions properly in its intended environment without degradation of performance can be considered a good EMC (electromagnetic compatibility) design. Overdesign is as unacceptable as underdesign when one considers the penalties on spacecraft reliability, size, weight, and power. Present EMC specifications are inadequate when applied to present-day scientific satellites. A more effective approach would be to require that the contractor provide a spacecraft that will perform properly in its intended environment. If the spacecraft mission objective is to measure ac electromagnetic fields in space and these fields cannot be measured because of interference, then the mission must be considered a failure regardless of how well the spacecraft functions.

The *OGO* spacecraft are probably the quietest spacecraft in orbit, and yet they are wholly inadequate for ac electromagnetic fields measurements. The tremendous effort that went into the reduction of EMI was effective, but the interference levels are still well above the field

---

[4] *OGO-E* was launched March 4, 1968. The interference levels were lower than previous *OGO*s. The 1.8- and 3.5-MHz channels are close to the cosmic background level. The levels are higher than cosmic on the six channels below 1.8 MHz.

intensities which we are trying to measure. In all fairness to the *OGO* program, it must be remembered that the spacecraft were not designed to be EMI-free. Standard EMI specifications were followed which resulted in an allowed level of spacecraft-generated interference that was 40 dB to 60 dB above the threshold levels of the scientific instruments that are expected to gather data on ac electromagnetic fields over wide frequency ranges in space. This vast difference between the generated and susceptible interference levels indicates that a new design approach is necessary for scientific spacecraft.

The design of an EMI-free spacecraft is a challenge. It requires a great deal of effort at the systems design level to achieve compatibility between the experiments and the spacecraft while maintaining the objectives of both. The systems designer must consider waveforms, frequencies, voltages, currents, and impedance levels of the internal signals as well as effective filtering and shielding. To make life even more complex, the experiments should also be scrutinized to determine if they are compatible with each other. The pertinent considerations that were used in arriving at the systems design should also be used at the subsystem and circuit design levels.

The circuit design and component selection level is probably the most neglected area of interference reduction. It is at this level that significant EMI reduction can be accomplished by clever circuit design and a judicious choice of components. The suppression of EMI at the source is much more rewarding and efficient than trying to contain it by brute force shielding once it has gotten out of the circuit enclosure.

Present-day spacecraft subsystems and scientific experiments contain digital logic elements which produce pulses. The pulse spectrum is a function of the pulse waveform and repetition rate. The repetition rate is generally fixed by the system requirements, but the pulse shape is generally set by other factors such as power consumption, timing accuracy, cable capacity, etc. When sharp, short pulses are not needed for timing accuracy, they should be rounded off and/or lengthened to reduce the high-frequency components. Operating pulse drivers into a mismatched load causes ringing, which significantly increases EMI. Another inherent problem with digital systems is that the input and output circuits must of necessity be wideband and are therefore difficult to filter. This means that the EMI produced within the digital circuit enclosure cannot be filtered on the output or input lines, and therefore cannot be contained within the enclosure. Since the design of a quiet spacecraft containing lots of digital subsystems is an extremely difficult job, one wonders if there isn't a way to design around pulse systems. A simple example of designing around pulse systems would be a synchronized power converter using a sine-wave synchronization signal with a zero crossing detector in each converter instead of the square wave used on *OGO*. The input and output power lines can be effectively filtered in either case; but the square-wave synchronization signal input cannot be filtered, whereas the sine-wave signal input can be filtered at all frequencies except the synchronization frequency.

Throughout this presentation it has been shown that many of the EMI problem areas that were investigated and corrected on the *OGO* prototype were also found and corrected on all subsequent *OGO* spacecraft. This needless expenditure of valuable testing time points out the less glamorous but vitally important function of carrying a good EMI design from the original inception to the launch pad. This requires a persistent effort to meticulously check every individual part that goes into the spacecraft, both initially and as a result of rework or design changes. The quiet spacecraft design goal will not be realized without this type of effort.

Good EMI design procedure should also be applied to the ground support equipment that is required to exercise the spacecraft during tests. The EMI generated by the support equipment should actually be lower than that of the spacecraft if meaningful spacecraft-generated EMI measurements are to be made.

B. Testing

The earth's surface is a hostile environment for the testing of EMI effects on equipment that is to make electric and magnetic field measurements from spacecraft. Gross interference can be detected down to the local ambient level, but these levels are much greater than the levels that are to be measured in space. The obvious need is for a shielded enclosure of some kind. Screen rooms aren't the answer for most of these experiments because the screen room drastically changes the impedances of both the radiators and receptors. What is needed is a screen room whose inside walls look like open space—in other words, a chamber with effective absorption from a few hundredths of a hertz to hundreds of

MHz. A more economical but slightly less desirable alternative is a large underground cavern. Assume that such a test site is available and the spacecraft has been located equidistant from all surfaces and is in flight condition. The next problem is to keep it clean by checking everything that is allowed to enter the test site. It must be remembered that the equipment that is certified as clean can fail at any time, and this failure could produce EMI. The sterilization techniques of an operating room must be adopted and adhered to. Through this approach, meaningful tests can be made to very low levels.

The test procedure should be laid out to expedite the identification of all EMI producers. These producers can be of the solo or group type. The solo type should be cleaned up so that it can be determined whether they are also group producers. Group producers require a good deal of study to determine the generation mechanism.

The time devoted to the testing of each individual unit should be longer than its individual cycle time; the time for a group should be long enough to assure that each subcycle of each cyclic unit has had a chance to interact with each subcycle of all of the other cyclic units in the group.

After the testing and temporary fix stage is completed, the spacecraft should be modified and retested. The final test should be conducted as close to launch as possible to reduce the substitution of spacecraft subsystems and experiments to a minimum.

Discussion

Robert G. Peltzer: Sometime we must stop the practice of going back and fixing. I think we must adopt a whole new outlook if we are to provide spacecraft for experiments such as have been talked about in the preceding papers. These levels require a fresh approach. It doesn't pay to talk about filters and shields and this sort of thing; we must go back and look at the circuits themselves that generate the interference. I think we need some basic research in circuit design for converters. We need to carefully examine the pulses that are passed around inside the spacecraft. In particular, the timing within the data handling systems should be examined to find just how fast a rise time is required for these pulses and whether we can afford to round the pulse off and reshape it at the receiving end.

What I am trying to emphasize is that we must go back and reevaluate our position and our thinking if we are to have spacecraft that are going to be much better than we have so far. We need an improvement of 10 to 30 dB on the first attempt and 60 to 80 dB ultimately. If we are to achieve these levels of suppression of the interference, we must come up with new concepts and new ways to control the situation – from the start all the way through to the end.

Chet Hastings: In regard to the dc-to-dc converter problem and some of these other problems which you are saying are our problems, I'd like to offer for your consideration a few solutions. On the dc-to-dc converter problem, which is quite well known, we have found that we can build dc-to-dc converters of the high-efficiency type – 90% efficiency, with the switching regulator input, converter type output – using a couple of techniques that I would like to share with the community here.

In the converter section, we have found it almost a necessity to separate the flux of the drive and the output sections by providing an independent core on the input, a saturable core reactor to provide drive apart from the flux that is in the output core. Then when this drive goes to the switching transistors, a low-pass filter is essentially provided by putting a small capacitor from the base-to-emitter junction of the switching transistors.

In the switching regulator sections, there are other things that can be done. The type of switching regulator that we use employs a National Semiconductors LM 101 for a modulator. We adjust the frequency compensation capacitor in order to control the drive current for the switching transistors in the transition region. Finally, on the flyback diodes of the switching regulator we utilize very fast recovery time diodes. Where this is not possible, if you have a high wattage, high current supply and you don't have a fast diode, a small capacitor across the diode will serve the same purpose. These techniques and a modest amount of filtering on the input to meet the interference specification on the supply line from the vehicle bus usually can be adjusted to completely eliminate the inverter as a source of noise.

The other matter that I would like to share with you relates to a solution to the digital noise problem. Basically, this information was presented in an *EEE* article recently which showed that digital electronics suffers from common mode voltage developed on the supply bus line, and can be overcome by adjusting the characteristic impedance to a very low value, using strip-line techniques. If this can't be done with a flat-strip type of wiring such as flex print, it can be done by judicious routing of the wires that are used, and then using load bypass capacitance to essentially try to pull the characteristic impedance down from card to card; then on the cards themselves, by using point-to-point wiring to overcome common mode coupling and crosstalk. This can't be done if you are using a flex print; that also reduces crosstalk. The point is not to cable and lace the wires on the back of the printed card.

Another technique useful on the digital noise problem is that the switching is incompatible with wire runs of a few inches, primarily because of the fact that the integrated circuits are extremely fast. It is unnecessary, normally, for the digital data format to have this extremely fast switching. On the other hand, you

Discussion (contd)

couldn't stand the dissipation if you slowed it down. So we try to arrange the electronic layout so that we can choose a minimum number of paths where we have to take digital data through an interface and over wires, and then insist that whenever the digital data does go over wires, it go through a discrete component, a transistor which has a small ceramic capacitor from base to collector. This essentially removes the high-frequency interference that would resonate on the wires and enables you to use normal aircraft wiring for the data format digital transmission.

Robert G. Peltzer: As I said before, I think that a few people know how to make good converters but I don't think this knowledge is shared too widely throughout the community. Goddard ran a set of tests for *OGO* on six or seven converters. The experimenters went out to buy the best of the batch, and they didn't get anything like Goddard got. The reason is that the people had made "improvements" in the converters. Ones that were quiet were now noisy.

Arthur Bridgeforth: You made a good comment about redesign of conversion equipment to improve the EMI compatibility. However, there is, I think, a problem in the basic mission philosophy. As you pointed out, the requirements for the mission are generally to get back scientific data. There is a justifiable reluctance, when you design the power conversion equipment, to incorporate new designs because this inflicts an element of unreliability. I would like to recommend that the scientific community relegate a portion of each spacecraft for some engineering experiments.

William R. Johnson: The converters that are on *OGO* were designed about 1957, and I don't believe anybody knew too much about converter design at that time. They haven't been improved since and it's a problem of cost or, as Mr. Bridgeforth just said, reluctance or fear to try out new things because they might fall through the floor. I don't think that that's really justification. We are probably going to have to improve them anyway. Part of this problem really lies with the scientific community. I doubt that either Mr. Peltzer or Dr. Smith would give up, say, 25% of their power profile so that the converters could be made less efficient. On any spacecraft you have some limitation on your power requirements. But I'm really glad to see that the problems are recognized by the scientific community. If we design spacecraft so that they are optimum in power conversation efficiency, lifetime, and most other respects except in the amount of noise that they generate, we don't ultimately accomplish the mission. Perhaps a little more pressure should be put on NASA and the government to recognize this aspect of the spacecraft. We perhaps might relinquish a little bit of the power conversion efficiency. We might make the thermal people compromise with us occasionally, instead of the other way around.

N69-25438

In-Orbit Interference Problems[1]

Frederick L. Scarf
TRW Systems
Redondo Beach, California

I. Introduction

We have been involved in a number of experiments primarily aimed at detecting VLF electric fields, although we've flown magnetic sensors as well. Our problems are not generally quite the same as some that you have heard about this morning, but we have found our share of bad ground loops and related difficulties which needed corrective action before launch.

However, the signals that we tend to detect in space are generally considerably stronger than the kind of radiated or conducted interference that we've been talking about here. It has been our sad experience to realize that a good many of these are interference signals produced by the spacecraft subsystems, or by other experiments. Our problem is to try to understand these in-orbit interference effects, to try to separate out the local noise sources from the ambient waves, and finally to try to decide whether there are any ambient waves there at all. I will show some examples of these interference effects, speculate a little about the origin of a few, and conclude with a few minimal recommendations on how to alleviate some of these problems.

II. Spacecraft Interaction with the Plasma

Figure 1 shows measurements made several years ago on *1964-45A*, an Air Force polar orbiter, looking at electric fields near 2 kHz in a bandpass channel. Ephemeris parameters and some energetic electron data are also plotted. What we saw at that time looked very encouraging to us. The peak fields were found in interesting regions where precipitating electrons were present, and in all ground tests there were no interference sources at 1.7 kHz which coupled to our experiment. So we concluded, incorrectly, that all of these were ambient waves. As a matter of fact, we now know very definitely that some of these are not, and I am talking about the kind of 8- to 9-min ripple that can be seen at the left in Fig. 1. One of the main lessons to be learned from this example is that the very poor telemetry which we had on *1964-45A* was one of the major factors keeping us from recognizing this interference. If we had had broadband telemetry, the noise source would have been immediately detected. In fact, if we had been able to sample more rapidly, even in our digital channel, this would have been true.

A. Faraday Cup Interference

The source of interference is shown in Fig. 2. There is a Faraday cup on board, and ac voltages are put on

---

[1] This manuscript was prepared under NASA Contract NASw-1598.

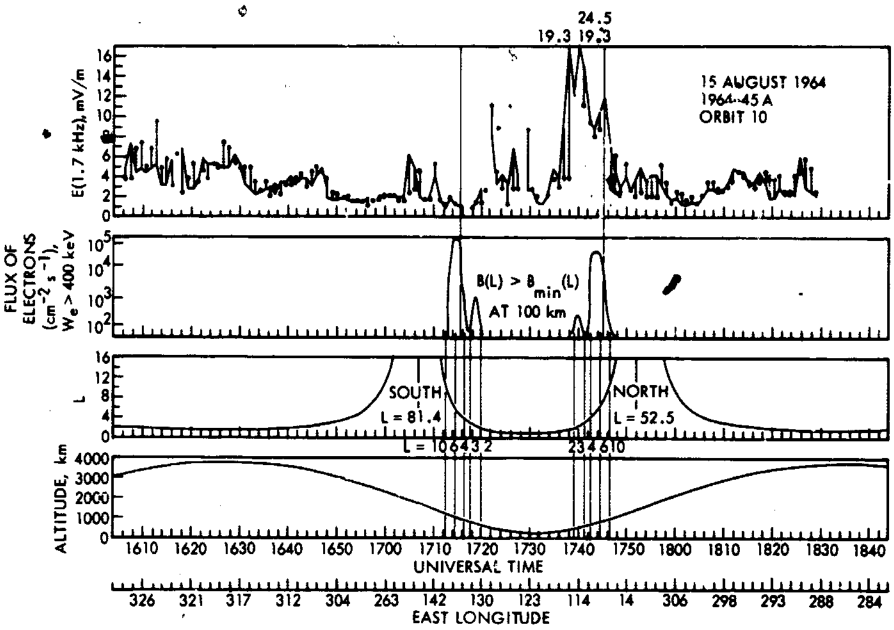

Fig. 1. Data from *Polar Orbiter 1964-45A,* August 15, 1964, orbit 10

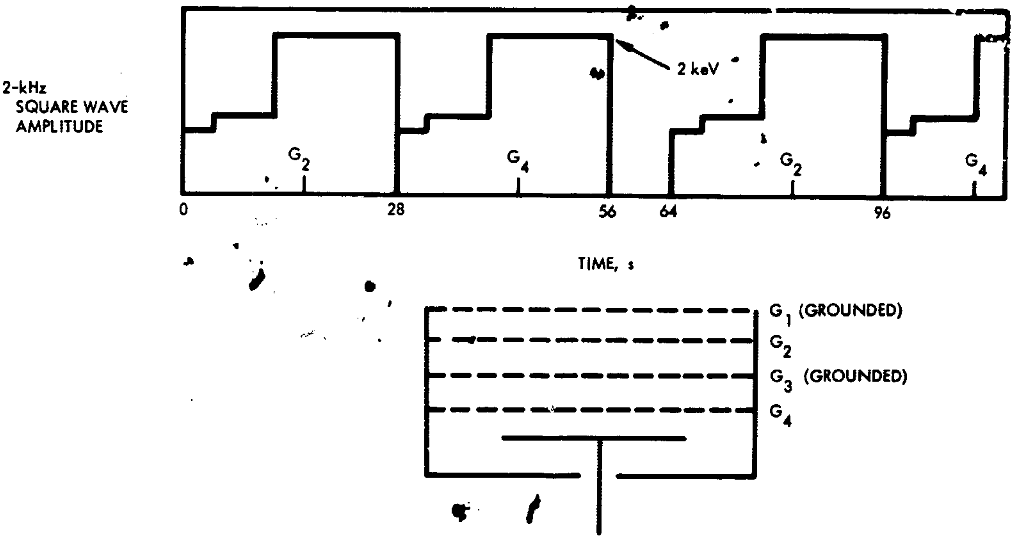

Fig. 2. Schematic of Faraday cup and grid voltage vs time

either grid 2 or grid 4. The ac amplitudes go up to 2 kV, and the waveform is that of a 2-kHz square wave. The figure shows just the amplitude envelope. There is a repetitive sequence where the second grid is modulated, and then the fourth grid, and then nothing, second, fourth, and so on, as shown. The only difference between the two grids is that G_4 is deep within the system and G_2 is much closer to the plasma. There is only one grounded grid between G_2 and the plasma, and 2 kV of ac are placed behind this transparent ground. Of course, an experiment such as this is very well shielded with respect to the inside of the spacecraft. It is all enclosed in a box; shielded cables are used, and so on. But really there is very little between the high voltage ac and the plasma itself, and it should be no great surprise that *external* noises are generated.

Figure 3 shows some measurements we have recently made on another Air Force satellite, *OV3-3*, with a similar cup on board but with better *E*-field telemetry. The 2-kHz modulation amplitude on grid 2 is shown in the lower figure, and the dashed line is the electric field response in the 7.3-kHz channel. Observe that when the grid 2 modulation goes on we start seeing signals that turn out to be spin-modulated, and these vary with magnetic field aspect, with the direction of the spacecraft velocity vector, and so on. They look like normal signals, except that they go away as soon as this second grid is not modulated. When the fourth grid is modulated there is no indication of any interference. The difference here is simply that one grid is closer to the plasma than the other, and thus the noise source is less protected from the plasma. Another interference source can also be seen in Fig. 3. We have some low-frequency channels on *OV3-3* at 400 and 80 Hz. Rather moderate levels can be seen on the logarithmic scale when the spacecraft is in darkness, but these channels are greatly degraded as soon as *OV3-3* gets into the sunlight. The middle plot is the solar panel current, and the 80-Hz channel is saturated in sunlight; the 400-Hz channel is not quite saturated but there is degradation and a spurious modulation which varies at the spin frequency. Fortunately, we have a broadband channel on *OV3-3* that allows us to tell what produces this low-frequency saturation. I'll come to that shortly, but first I would like to continue with this cup effect and show how it varies over the orbit.

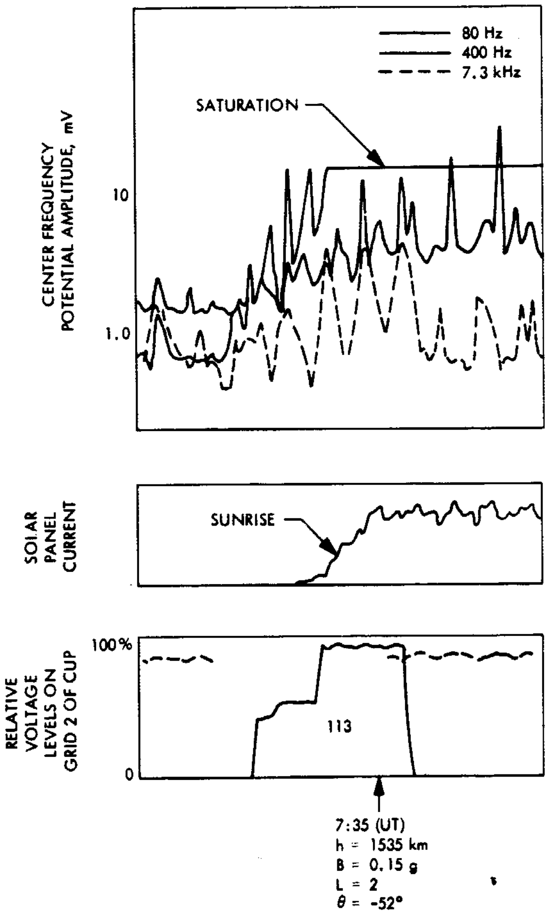

Fig. 3. OV3-3 satellite data from orbit 49–50, August 9, 1966

Figure 4 illustrates the response when the cup interference is not present (solid line) and the response when it is present (the dashed line). What one can see from this is a suggestion of a pattern. We have looked at many orbits now, and indeed there really is a pattern. At low altitudes, where the density is high, the effect of the cup is disastrous. When we get to high altitudes, and in fact when we pass into the low-density region beyond the plasmapause, the effect of the cup vanishes completely. This is the sort of effect that one can easily mistake for a natural signal. It varies with density, and it varies with altitude. It goes along with all the physical parameters that we are looking for. Yet with enough resolution we can see that it is actually a spurious effect and completely dominated by the modulation of this cup.

I will return to this and speculate on some ways in which the cup noise can get out into the plasma, but one further point is shown in Fig. 4. A 6-kV dc level is put on the second grid, and that is the nominal value shown. However, at low altitudes the dc voltage sags down to less than 20% of the 6 kV. What this means is that an instrument such as the cup is not really passive. It is connected to the plasma, and it draws current from the

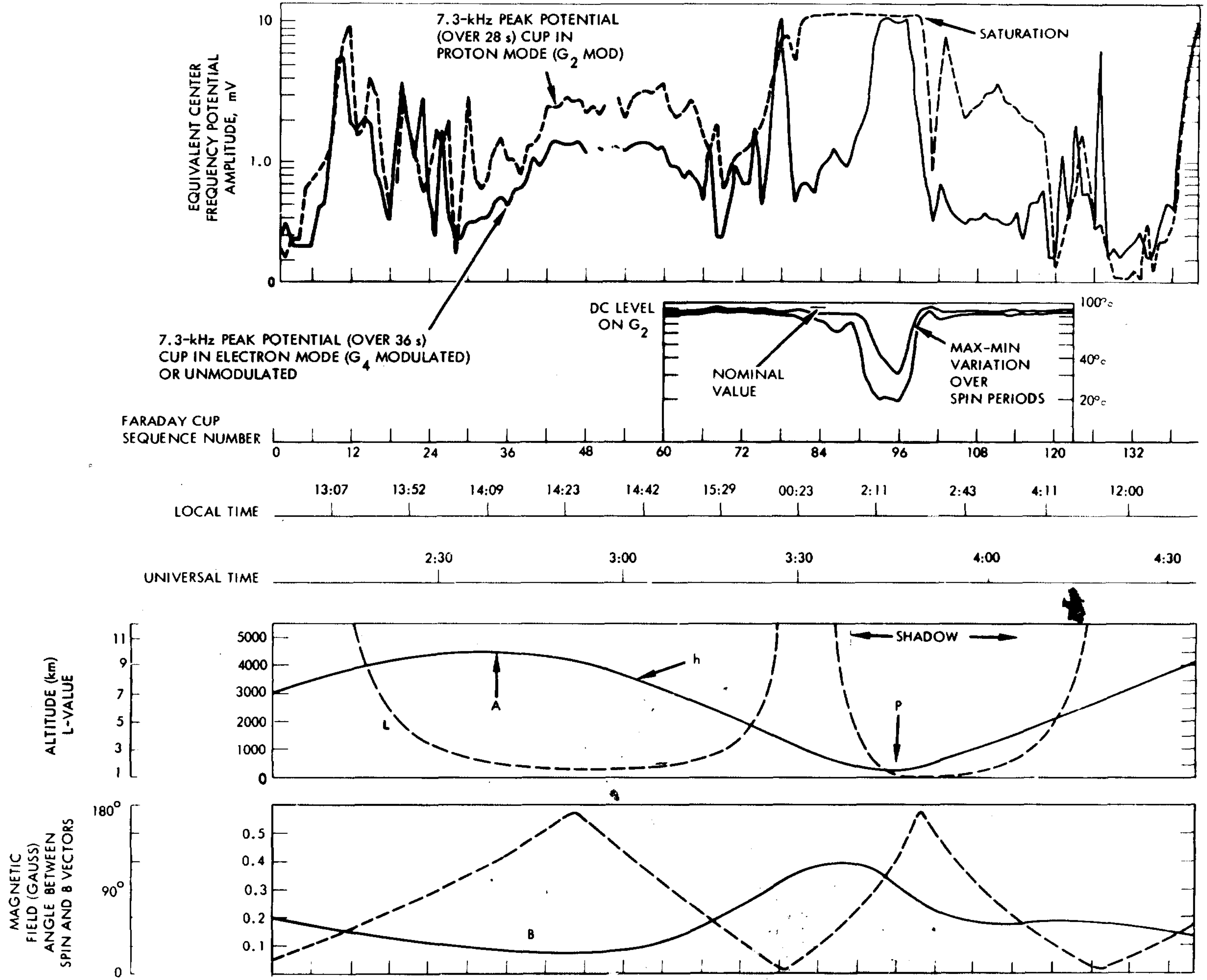

Fig. 4. OV3-3 data from orbit 80–81, August 12, 1966

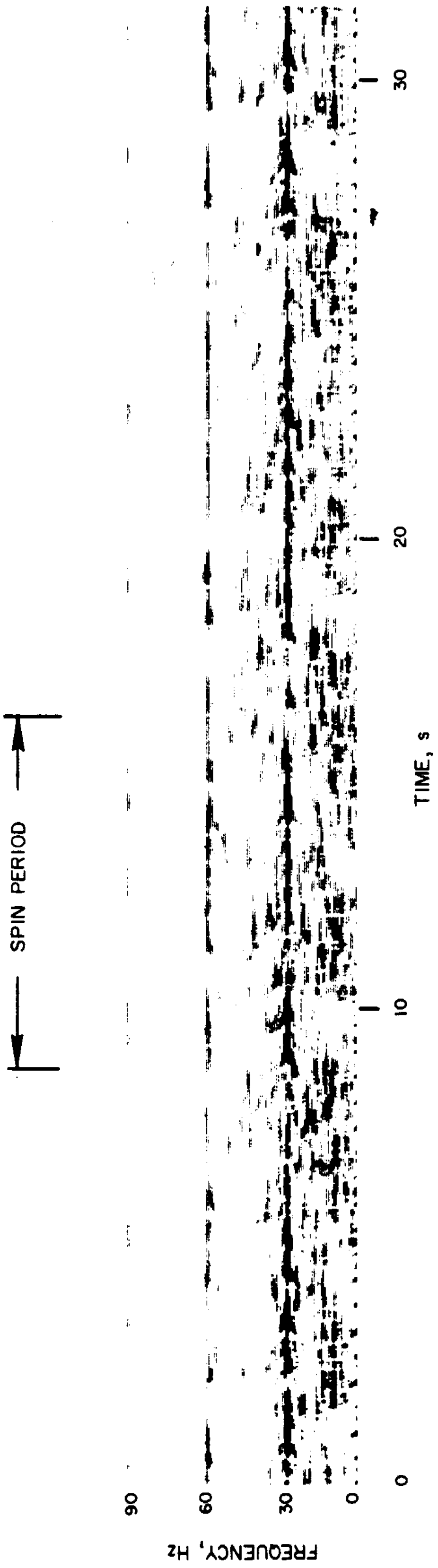

Fig. 5. OV3-3 solar panel interference

plasma. This is another source of trouble in discussing how the spacecraft, its experiment package, and its subsystems interact with the plasma.

B. Spacecraft Potential Distribution

We now pass on to the *OV3-3* sonogram (Fig. 5) to show the broadband data in sunlight. The strong 30-, 60-, and 90-Hz signals are obviously artificial, and they are sufficiently intense to mask all ambient waves in the band. We have determined that these noises are derived from a 30-Hz oscillator which drives the 1 × 60 and 1 × 120 electronic commutators. Similar effects have been found on *Alouette*, *OGO*, and many other spacecraft. When the solar panels are illuminated they are biased on; spacecraft noise signals flow out onto the panels, and they couple very strongly to electric field antennas. *Alouette* sonograms showing the sudden appearance of strong converter noise as the spacecraft crosses the terminator from darkness have recently been published. Once again, this is an in-orbit problem. Conventional ground tests reveal no difficulty.

In Fig. 6 there is an idealized sketch of what we normally tend to think of as the plasma state around an unilluminated metallic spacecraft. In the figure, the positive ions come from several directions, but at low altitudes the proton thermal speed is small compared to the ram velocity $[U >> (\kappa T_+/m_+)^{1/2}]$ and the positive ions primarily come from one direction with the ram speed U, while the electrons arrive from all directions. The currents delivered by the two species are not the same unless the spacecraft acquires a charge, and a potential distribution $\phi(\mathbf{r})$ develops. If we approximate $\phi(\mathbf{r})$ by a spherically symmetric potential $\phi(r)$, then the positive and negative current densities are

$$j_+ = NeU$$

$$j_- = -Ne\left(\frac{\kappa T_-}{2\pi m_-}\right)^{1/2} \exp\left[-e\phi(r)/\kappa T_-\right]$$

and since $A_+ = \pi r_0^2$, $A_- = 4\pi r_0^2$, the "floating potential" $\phi(r_0)$ (determined by $I = I_+ + I_- = 0$) is

$$\phi(r_0) = \frac{\kappa T_-}{e}\log\left(\frac{8\kappa T_-}{\pi m_- U^2}\right)^{1/2}$$

In the region around the spacecraft ϕ decreases, and this model gives

$$\phi(r) = \frac{r_0}{r}\phi(r_0)\exp\left[-(r - r_0)/L_D\right]$$

where $L_D = (\kappa T_-/4\pi Ne^2)^{1/2}$ is the Debye length; the charge separation region of thickness L shown in Fig. 6 is several Debye lengths, and the potential is related to the temperatures and the ram velocity. The only complexity that arises in discussing this in our idealized fashion is that there is a wake region, with no ions, so there has to be some focusing or reflection.

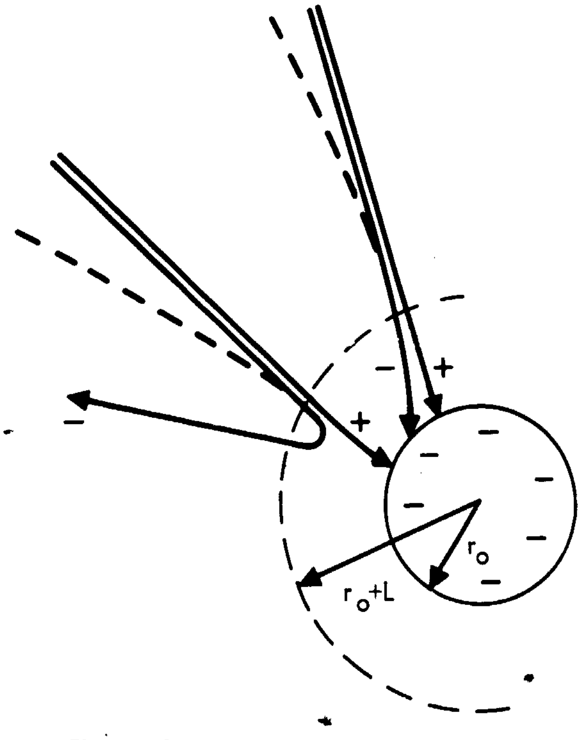

Fig. 6. Plasma state around unilluminated metallic spacecraft

The question I want to raise now is whether this picture has anything to do with reality around a typical spacecraft, even when the ambient plasma is almost quiet. A list of complications that should go along with this is as follows:

1. The outer surfaces of the spacecraft are generally made of insulating material.
2. Photoelectrons are concentrated on the sunlit sides of spacecraft.
3. Solar cells contain dc voltage distributions which exceed equivalent thermal and photoelectron energies. These voltages can severely affect the "sheath."

(4) Instruments on the spacecraft can collect, or emit, current locally, destroying the "floating" potential condition.

(5) V × B electric fields can produce asymmetry and modify the current collection.

(6) Fringing fields or other instrumental effects can produce nonequilibrium particle distributions near the spacecraft.

(7) Spinning booms or solar panels can distort the distributions.

(8) The local plasma may be unstable or marginally stable with respect to wave growth.

First, the deduction that one normally makes assumes that the sheath surrounds a metal object. A good look at any spacecraft immediately tells us that very little of it is metal, and in fact, very little of it is a good conductor. There is usually an abundance of glass, paint, mylar, etc. Moreover, in sunlight, we don't have an isotropic distribution of electrons; they are generally concentrated on the sunlit side. The solar cells also contain very large dc voltage distributions. The electron temperatures that we are talking about and the potentials in Fig. 6 were on the order of millivolts (100 mV at low altitudes going up to a few volts beyond the plasmapause), but in the solar cells there are definitely large dc voltages (20 or 30 V) which can affect all these distributions. On *OGO* I believe that the particle experimenters who are trying to measure the charge on the satellite find that this varies greatly as they compare results taken at different places on the spacecraft.

We have seen on *OV3-3* that there are instruments that can actually collect current. There are other instruments that can emit current. In fact, one spacecraft with a prominent noise problem, *FR-1*, has an electron filament boiling electrons off. The point of this is that certainly the simplest ideas on the current going to the spacecraft have to be modified. We must ask which part of the spacecraft has zero current, or current flowing out, or current flowing in. At low altitudes especially, it has also become apparent that electric fields associated with motion across the geomagnetic field can be very important, in particular with respect to this solar panel interference.

Fringing fields penetrate into the plasma from various instruments, and these disturb the particles; this can account for some of the cup-induced interference effects on *OV3-3* and *1964-45A*. Spacecraft also have spinning booms and solar panels which kick charged particles around. All in all, there is considerable reason to believe that the plasma that we are dealing with in space is not a simple medium and that the environment does not resemble that at Malibu or that of Fig. 6. In fact, by doing all of these things to the plasma, we can not only amplify waves, we can perhaps start waves that weren't even there.

I'd like to go through a specific example, showing you a spacecraft in order to point out some of these difficulties. We have an experiment on *OV2-1* which is in orbit now in a hundred pieces, so it is very easy to conjecture and speculate about the possible interference effects. Let us take a look at the physical configuration and try to attach some of the above comments, keeping in mind the customary simple idea of a satellite which resembles a spherical conductor or Langmuir probe. Figure 7 shows *OV2-1*, with our VLF experiment buried in the middle of booms, solar panels, and other appendages. Most of the outside of the spacecraft is not conducting. If the chassis of this spacecraft is supposed to come to some kind of equilibrium potential, then the electrons and the ions have a hard time finding where to come. Furthermore, UV arriving from the sun concentrates photoelectrons on the sunlit side. This flux also biases all the solar cells on, so that any noise sources from the inside which are not properly filtered can get out to the plasma, right on the solar cells. There is a wake region and shadow regions. I arbitrarily put the magnetic field going up, and again there is an asymmetry. We have very good conductive paths along the magnetic field, and poor ones perpendicular to it. Finally, a V × B electric field exists across this entire spacecraft, and this can distort the sheath even more. Upon looking at this picture again, I conclude that we may be fortunate that no data were returned.

C. Radiated Power

Figure 8 illustrates one other source of trouble which has actually turned out to be a very useful one for RF experimenters. Transmitters on spacecraft radiate power, and local disturbances can be generated. The *Alouette I* and *II* and *Explorer 20* topside sounding experiments carried swept-frequency RF transmitters used to construct electron density profiles. The RF signal is reflected when the frequency matches the local plasma frequency, and the echo time delay gives the range at which the reflection occurs. The *Alouette I* ionogram of Fig. 8 also shows a large number of zero-range "spikes" or resonances. These are found at the local plasma frequency f_N, at all harmonics of the electron cyclotron frequency nf_H,

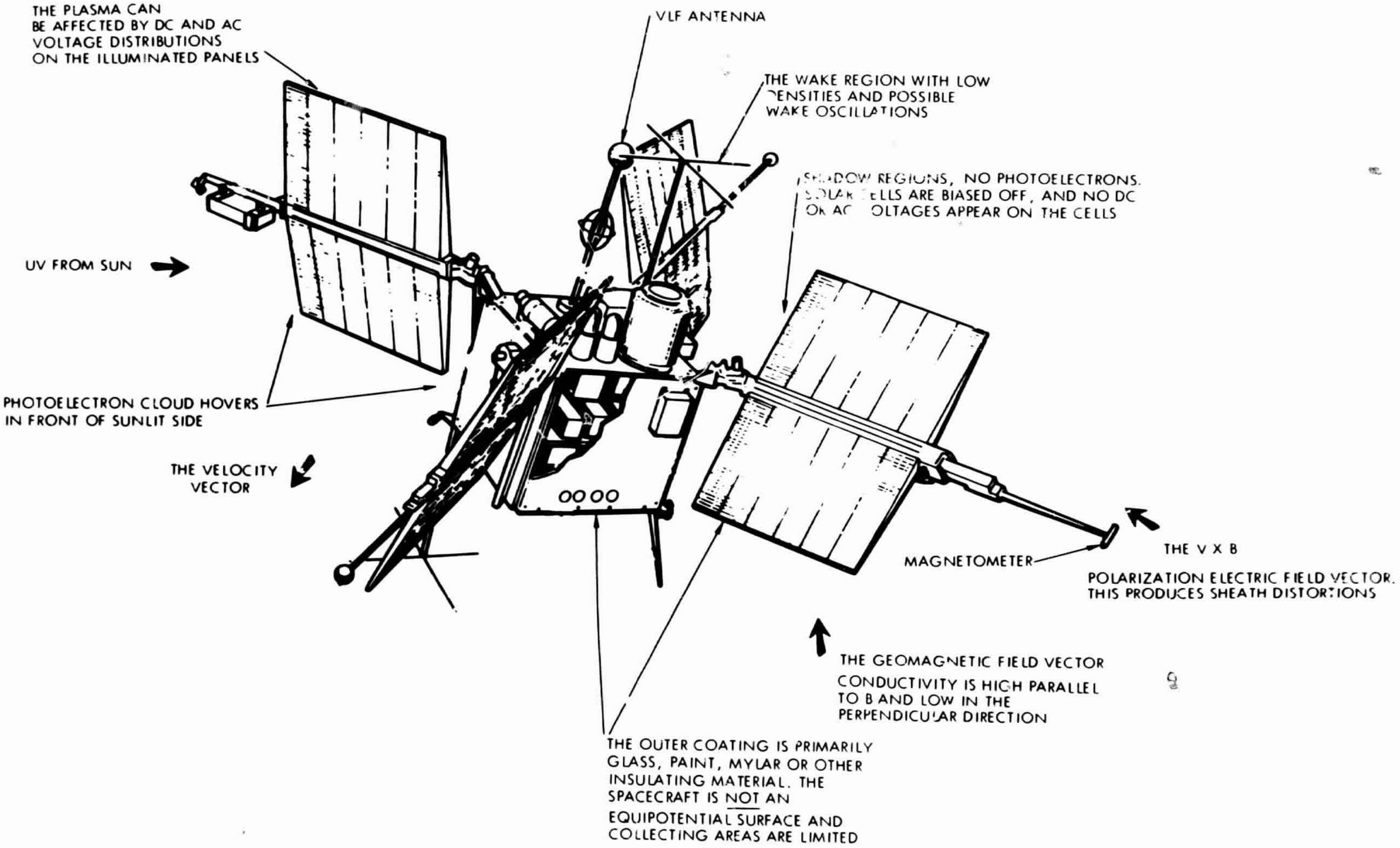

Fig. 7. OV2-1 satellite

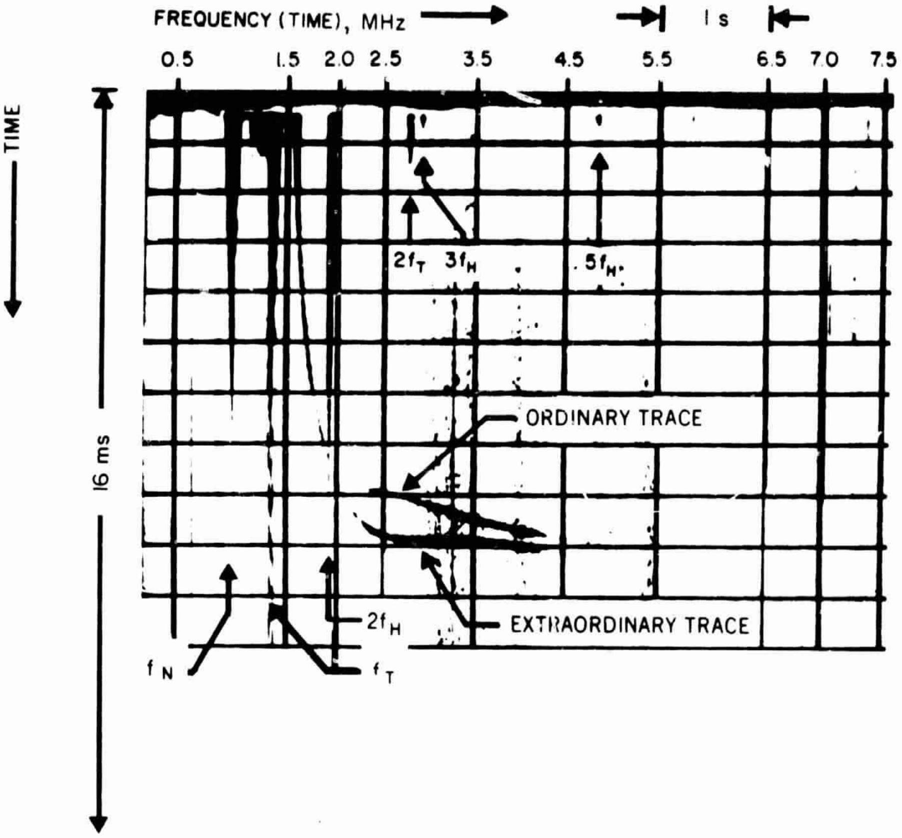

Fig. 8. Ionogram from *Alouette I* showing sounder reflections from the ionosphere

and at the upper hybrid frequency f_T. These spikes are generated when the transmitter frequency equals the frequency for a zero-group-velocity wave mode. Large power levels build up in the vicinity of the spacecraft, since flow is impossible, and this energy deposition distorts the region around the satellite.

III. Speculation on Causes of Interference

Some of the specific ways in which troubles can arise seem well verified, and some are quite speculative. Figure 9 takes three in turn. The first is the explanation which we think has to do with the *Alouette* and *OV3* solar panel troubles. That is, there is a **V** × **B** field in the direction of the arrow, and this means that the right end of the antenna is positive while the left end is negative. Thus the electrons are not collected over all of the spacecraft, but they just come to the right end of the antenna. Now we put a very large voltage on the solar panel. We add a little bit of noise to that so that we can fluctuate the difference in potential between the spacecraft ground and the end of the antenna, and we must then see an ac signal which represents the solar panel noise. This interpretation was proposed by the *Alouette* group to explain their interference problems. It seems to fit what they have seen in terms of the polarization, the **V** × **B** effect, and the fact that the spurious noise goes away when the solar panel is biased off (in darkness). It seems to fit our low-frequency *OV3* problems, as well.

The second and third explanations that I discuss here are much more conjectural. That is, if a dc electric field, such as the **V** × **B** field or a fringing field from the solar panel, is impressed on the plasma, then the currents will start to rise because this is an almost collisionless medium. However, eventually the currents will level off as if we had a resistance in the plasma. The applied field need only exceed this runaway field (which is really extremely small) to get this effect. This dc electric field essentially pulls the electrons one way and pushes the protons the other; the resultant two-stream instability

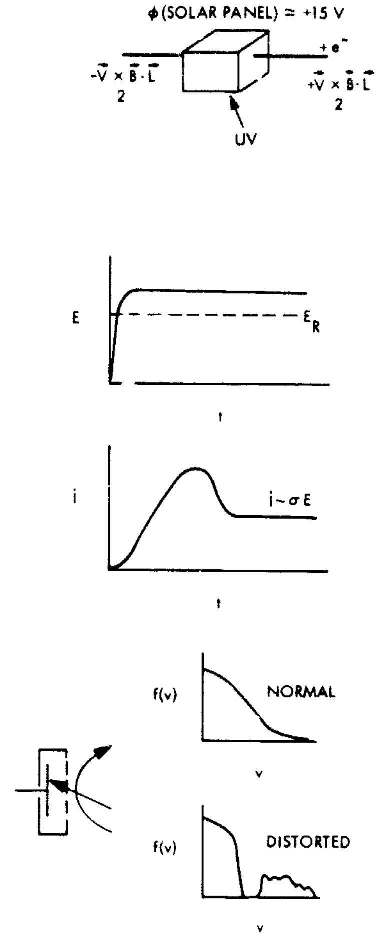

FLUCTUATIONS IN SOLAR PANEL POTENTIAL AFFECT ANTENNA ELECTRON COLLECTION AND PRODUCE VOLTAGE VARIATIONS IN THE INPUT CIRCUIT

E_R IS THE RUNAWAY ELECTRIC FIELD

$$E_R = \frac{m}{e}\,\nu\left[\frac{\kappa T}{m}\right]^{1/2} \cdot 10^{-6}\,\frac{N}{T}\left[\ln 10^4\,\frac{T^{3/2}}{N^{1/2}}\right]\ \frac{\text{VOLTS}}{\text{METER}}$$

FOR $E > E_R$, THE FINITE CONDUCTIVITY IS PRODUCED BY WAVE-PARTICLE SCATTERING. THE WAVES GROW SPONTANEOUSLY WHEN A CURRENT PASSES THROUGH THE PLASMA

ENHANCED CERENKOV RADIATION BY SUPERTHERMAL PARTICLES CAN OCCUR IF THE DISTRIBUTION FUNCTION f(v) IS DISTORTED NEAR THE PROBE

Fig. 9. Complications in space experiments

makes growing waves that scatter the particles and lead to a finite conductivity. I think we may actually have to worry about fringing fields producing growing waves in practice.

Another event that occurs in front of a spacecraft very commonly is that certain particles are allowed in to be analyzed, while others are turned around and sent back to the plasma. This means that if we look at the fraction of particles with a given velocity far away, we see a distribution which is smooth and Maxwellian, but near the spacecraft the instruments themselves produce distortions. The fact that many particle experiments do indeed produce significant disturbances in the environment around the spacecraft has now been verified in laboratory tests.

What are the answers to some of these problems? First, let us consider solar panel noise coupling. The *Alouette* group tried to insulate all of the exposed wires connecting adjacent solar cells, and these measures seemed to help on *Alouette II*. On the other hand, it also seems plausible that one might try to put a conductive coating around the entire solar panel, with the coating grounded to the chassis. To my knowledge this "solution" has never been tried. However, we have seen very similar interference in some of our experiments which are not connected with any solar panels. That is, we have had flights without particle detectors, without large fringing fields, and without solar panels. Figure 10 shows *E* and *B* field data from a battery-powered *Javelin* rocket flight. There are some known interference effects here that were found on the ground and which we could not eliminate before launch. One is an impedance sweep that appears every 8 s. There is also one line on the *B*-field sonogram that resembles an interference effect, but as the label shows, it doesn't really appear to be interference on closer analysis; instead there is a band edge at 650 Hz, and there seems to be an overlap. However, we do see in certain spatial regions a 2-kHz spin-modulated interference effect on the electric field antenna only. We know that there is a 2-kHz timing tuning fork on board. It is not connected to the plasma in any way that we can find, and yet the signal appears in flight, although it never showed up on the ground.

It is possible that the relative voltage between the rocket body and our antenna is being caused to fluctuate at this rate so that this shows up as a signal across our antenna. Whatever the origin, if we had only a bandpass channel centered at 2 kHz on this rocket, we would be tempted to publish data showing that there were large ambient field strengths. We have a similar situation with respect to detection of the lower hybrid resonance (the high-frequency band in Fig. 10), where there has been speculation about whether the waves are purely electromagnetic, or purely electrostatic (i.e., with no *B*), or something mixed in between. For this kind of analysis it is clearly of vital importance to know whether the *B* and *E* parts of Fig. 10 involve some interference effect or are really related to the same ambient signal. These examples illustrate the kind of interaction between the practical interference problem and the science that one sets out to investigate.

Most of these things that I have been talking about are worst for VLF measurements made at the lowest altitudes. That is, the relevant frequencies that are involved relate to the density of the particles and the local magnetic field. As we go up to high altitudes, these frequencies go down, into Dr. Smith's range. Moreover, the Debye lengths become large, and the spacecraft appears as a small object in the dilute plasma. There is some hope that the problems become less severe at high altitudes. But in these regions we encounter a great lack of knowledge about the environment. This is not EMI interference in the conventional sense, but a general lack of understanding of the region around the spacecraft and its effect on various sensors.

Some data from *Pioneer 8* are shown in Fig. 11 and the figure represents wave measurements taken extremely far out in the magnetosphere, the transition region, and the solar wind. There is one obvious interference source shown in the bottom box. The plasma probe on this spacecraft was arcing intermittently at this time, and we just happened to be sampling when the instrument was getting to the high-voltage steps where the arcing occurred during the period from about 7:41 to 7:50. This arcing has since gone away, but we still see the pronounced modulation in the 400-Hz channel, a modulation which we have shown to be a beat between the spin rate and our sampling rate on this spacecraft. It seems to go away or be much less perceptible in the region where there are warm electrons (the transition region), and to come back in the solar wind, but with a different apparent period because the spin rate has changed.

The thing that is amazing about this spin modulation is that the antenna making these measurements is parallel to the spin axis. The only asymmetry of any consequence is the 49-MHz Stanford antenna, which is tilted with respect to the spin axis, and there appears to be an angular distribution associated with this tilted antenna spinning around; the maximum occurs when this second antenna points in the solar direction. We do not completely understand this modulation, but we do know that the low-energy electron measurements on the spacecraft vividly reflect the fact that this spacecraft surface is not an equipotential. The front side, with respect to the sun, is positive by as much as 5 to 8 V. The dark side of the spacecraft is either negative or zero. Thus there is a highly asymmetric dc voltage distribution around the spacecraft, and this apparently modifies our antenna response.

Now, these anomalies are seen on *Pioneer*, a very symmetric spacecraft. Has anything like that been seen on other spacecraft? Here we come to a serious problem. Low-energy electron measurements made on IMP show that these same electrons, presumably the photoelectrons, are seen all over with respect to the sun. They have been interpreted by some as ambient electrons, but I think the Stanford radio propagation people can prove that they are not. The densities are much too high. One can speculate that perhaps these too are the photoelectrons, but dispersed by the solar panels on this rotating spacecraft. The point that I want to make here is that we really know very, very little about the region around a complex spacecraft. This is true especially in the sunlight and at high altitudes. Also we don't know what the effects of large waves or disturbances are on this sheath region.

IV. Concluding Recommendations

Specific Recommendations

(1) Make the spacecraft as passive as possible.

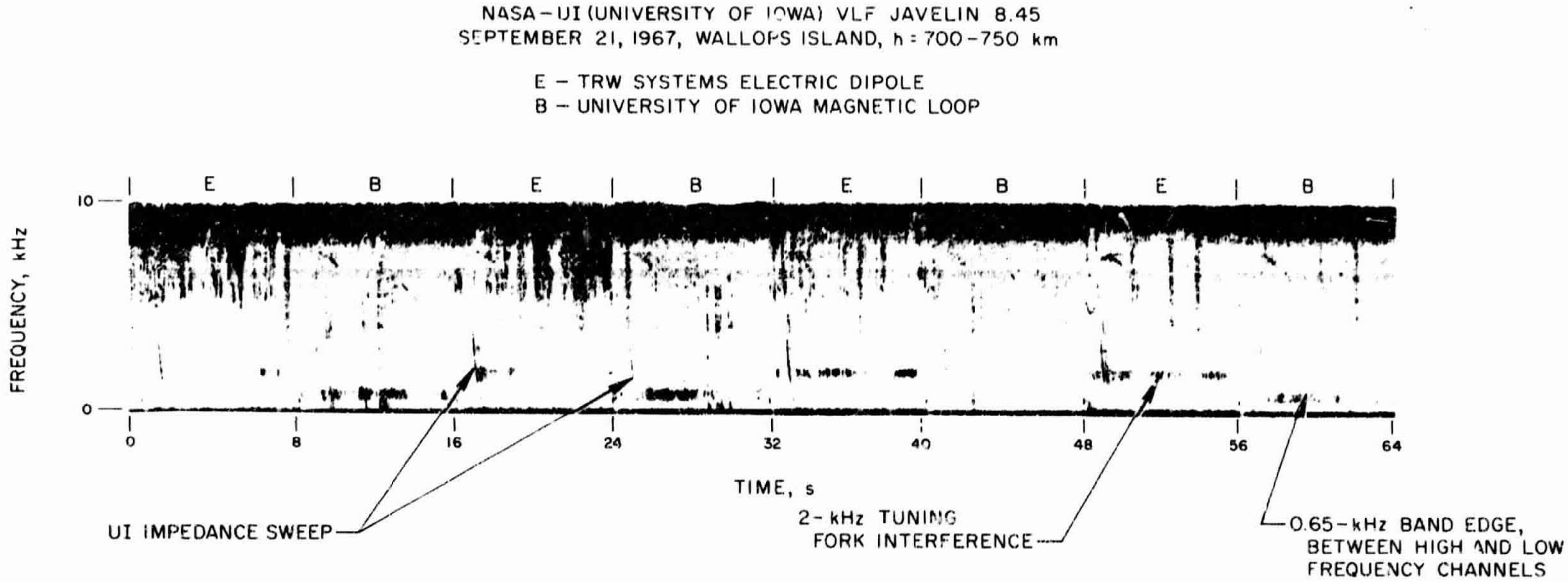

Fig. 10. ***Javelin* sonogram**

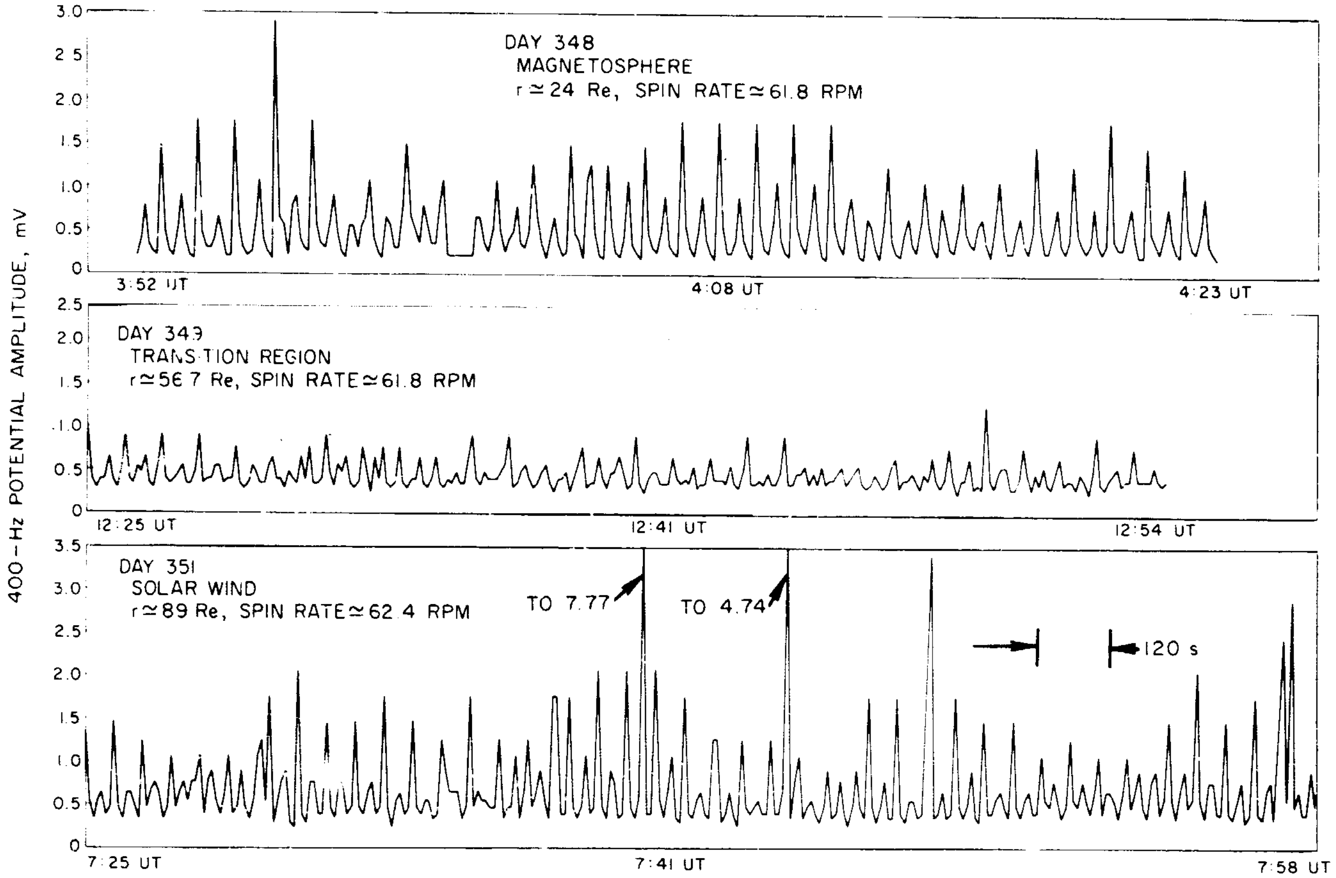

Fig. 11. *Pioneer-8 data*

(2) Isolate noise sources from the plasma.

Examples: Don't have exposed wires carrying ac currents.

Don't allow fringing fields to penetrate into the plasma.

Don't produce local nonequilibrium particle distributions.

(3) Insist on time-sharing options for experiments and some spacecraft functions.

(4) Design spacecraft and experiment noise frequencies to avoid anticipated natural frequencies.

Example: Avoid local values of ω_p^-, $n\omega_c^{\pm}$, ω_{LHR}, ω_{UHR}, etc.

General Recommendations

(1) Learn more about the "sheath" region around an actual spacecraft.

(2) Perform in-orbit interference experiments.

Examples: Transmit and receive local noise signals.

Try to stimulate resonances.

Examine effect of grounded grid or conductive coating on spacecraft exterior.

First, of course, all wave-measuring experiments should be furnished lots of telemetry so that interference sources can be identified. Getting down to more specific things, I believe there should be an attempt to make the spacecraft passive. Even if the noises don't appear to be devastating on the ground, they should be controlled, bypassed, or filtered to achieve even lower levels. The experience of many experimenters is that noise sources may crop up again once the spacecraft is in orbit.

In other words, let us keep noise sources from the plasma, even if on the ground they have not affected any particular experiments. It is very dangerous to assume that that situation will be maintained in the plasma. It is also impossible to conceive of doing a reasonable in-orbit interference test without being able to turn experiments off separately or to set up time sharing schedules.

One can also ask, where is this spacecraft going? What are the dangerous frequencies in this region of space where one might expect zero group velocities and large wave levels to build up around the spacecraft? These questions can be answered, and one can design oscillators and noise sources on the spacecraft to avoid these frequency regions. In general, I think we really need to know quite a bit more about the sheath than we now know, and I think we have heard enough today to justify some kind of in-orbit interference tests, as well as ground-based interference tests. As we have heard several times, the real proof of the pudding is not how well we can do at Malibu, but how well we can do in space. Perhaps it is even reasonable to think of an applications program which would include investigation of different kinds of couplings and interference levels from orbiting spacecraft.

Discussion

Paul Michaels: Have you paid any attention to the noise problems or interference problems associated with space debris in the vicinity of your vehicles?

Frederick L. Scarf: I hadn't thought about it. If we took a good look at any of those sonograms we could find a lot of unexplained things and I think we are nowhere near cataloging all of the sources of trouble yet.

G. L. Miller: We have a very clear example of the coupling of RF energy from the spacecraft into the plasma in my Figs. 17 and 18.[2] We have two antennas on the spacecraft and when we measured the noise on the ground, the different noise sources would give different amplitude signals at the two antennas. Furthermore, the noise signals were linearly polarized. What we have seen in space, however, is shown in Fig. 17[2] for the A antenna in a linear mode. If the region between 64 and 80 on the frequency axis is particularly noticed, a number of data points will be observed. In Fig. 18,[2] which is circular polarization, all of those data points disappear. In the latter figure, there are no data points in the region from 64 to a little to the right of 80.

That shows that the frequencies to the right are circularly polarized while the ones in the region between 64 and 80 are linearly polarized. Furthermore, independent evidence shows that the cutoff frequency at about 83 corresponds to the cyclotron resonance frequency. This is independent evidence, which is why I bring it out. It is possible to couple energy from the spacecraft into the plasma.

---

[2] In a preceding paper by Miller and Lie.

Bibliography

Osborne, F. J. F., Smith, H. C., Barrington, R. E., and Mather, W. E., *Can. J. Phys.*, Vol. 45, p. 47, 1967.

Scarf, F. L., Fredricks, R. W., and Crook, G. M., "Detection of Electromagnetic and Electrostatic Waves on OV3-3," *J. Geophys. Res.*, Vol. 73, p. 1723, 1968.

Scarf, F. L., Crook, G. M., Fredricks, R. W., Green, I. M., and Kennel, C. F., *Observations of Plasma Waves in Space*, in press.

N69-25439

Transient Measurements in Aerospace Vehicles

Bernard Schenker
Lockheed Missiles & Space Company
Sunnyvale, California

I. Introduction

A prime objective of system electromagnetic compatibility testing at the Space Systems Division of Lockheed Missiles & Space Co. is to show compliance of our overall vehicle systems with specification MIL-E-6051C. This specification, as we in the EMI field know, requires demonstration of compatible operation of the system, with a 6-dB margin of safety against degradation effects such as an unacceptable response or unacceptable reduction of performance in the specified operation of a device or subsystem. One or more of the following test approaches may be used for such demonstration:

(1) Injecting interference at critical system points at a 6-dB higher level than measured, while monitoring the system for improper responses.

(2) Measuring the susceptibility threshold of critical system circuits for comparison with existing interference levels, to determine if a 6-dB margin exists.

(3) Sensitizing critical circuits so as to render them 6 dB more susceptible to interference, and then operating the system while monitoring for improper responses.

Considering the types of systems we deal with, their modes of operation, the relatively small number of vehicles of a given design produced, tight schedules and short lead times, and other factors, we have concluded that the most feasible approach is that of measurement of existing levels and injection at 6-dB-higher levels.

One of the electrical acceptance tests performed on our space vehicles is a prelaunch checkout sequence (which we term a functional compatibility test), wherein all subsystems are put through every mode of operation — normal, emergency, and redundant — and must meet all performance requirements during the sequence. The entire procedure, including performance monitoring, is accomplished by the use of automatic checkout equipment. It should be noted that this test, of itself, would demonstrate compliance with the prior versions of MIL-E-6051, which did not require the 6-dB safety margin. To prove the margin, the test is performed twice more: first, while measuring noise at the selected critical points; and second, while injecting noise at the same points 6 dB higher than measured.

Early in our efforts, two facts became apparent. First, in the systems we were dealing with, transients were more of a problem than steady-state interference. Second, methods of measuring transients presented a greater problem than measurement of steady-state noise.

Available RFI meters, while time-consuming in operation, were adequate for determining steady-state noise levels, and subsequent development of automatic scanning and plotting accessories drastically reduced this time. However, there was no readily available standard instrumentation for accurately measuring transients and correlating them with vehicle events. The successive transient measuring methods used to attain our objective are described in this paper.

II. Test Equipment for Test Series No. 1

The first equipment investigated was an available automatic transient monitor console designed to detect, count, and record the time of positive and negative transients between two preset levels. It was decided, after a detailed evaluation which included discussions with the vendor, that this setup was too complex and unreliable for further consideration. At this point, owing to the fact that our first EMI compatibility test series was scheduled to begin very shortly, we decided to use a combination of proven instrumentation rather than consider any new equipment development.

For transient detection and visual presentation, an oscilloscope system with a passband of 24 MHz and a rise time of 15 ns was selected. Since the scope sweep trigger controls can be set to trigger only on a plus or minus transient, but not both, a pulse inverting circuit identified as an auxiliary trigger unit was fabricated as shown in Fig. 1. One of these units was connected to each scope, with its input taken from the "vertical output" terminal and its output fed to the "external trigger" input. With this configuration, the scope would be triggered by transients of either polarity. The trigger level control was set to a value which would preclude triggering by low-level transients and minimize the amount of data to be reduced. The value typically used was 1 V. It was determined by previous subsystem testing that a sweep of 20 μs/cm would be generally satisfactory for transient display.

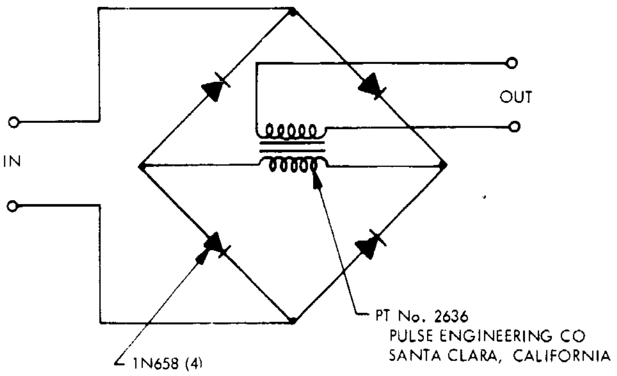

Fig. 1. Auxiliary trigger unit

A movie camera was decided upon for recording the transients presented on the scope face. A frame-type camera was ruled out because of the loss of data during the time the frame is being advanced, and a strip (or streak) camera was chosen. In this camera, the film is transported continuously at uniform speed past the lens. The strip camera has an adjustable gear box drive with a wide range of film speeds available (up to 3600 in./min). In addition, it contains an argon lamp which can be energized by a system time pulse generator and thereby record system time along one edge of the film. An experimental setup was made and a few short turns tried to verify the feasibility of the technique. One question arising was whether the scope should sweep at right angles or parallel to the film motion. During the experimentation, it was decided that time correlation and amplitude measurement would be much facilitated by sweeping parallel to the film motion, and this orientation was used for subsequent recording. The type of film used was Eastman Kodak Linagraph Ortho. A film speed of 22.2 in./min was chosen to allow filming the entire test sequence of approximately 10,600 s without reloading the camera magazine, which has a capacity of 400 ft of film. This would provide a running time of approximately 13,000 s, allowing a margin of 2400 s for calibrations and start and stop periods.

With the instrumentation selected and its operation verified, test procedures were written and all equipment assembled for the first series of compatibility tests. One problem in performing tests of this type is that of making physical connections to the points at which measurements are to be made. The typical breakout assemblies used in our production department for trouble-shooting purposes are entirely unsuitable for EMI work. They consist of junction boxes approximately 20 in. long with cables at each end from 5 to 10 ft long. Inserting such assemblies in the vehicle circuits completely alters their EMI characteristics. For our purposes, breakout adapters were made which consist of mating connectors joined by a cable having a length no greater than 8 in. Five-in. leads are brought out from the pins at which voltage measurements are desired and supplied with banana jacks for connecting the instrumentation. An analysis indicated that this assembly had a negligible effect on

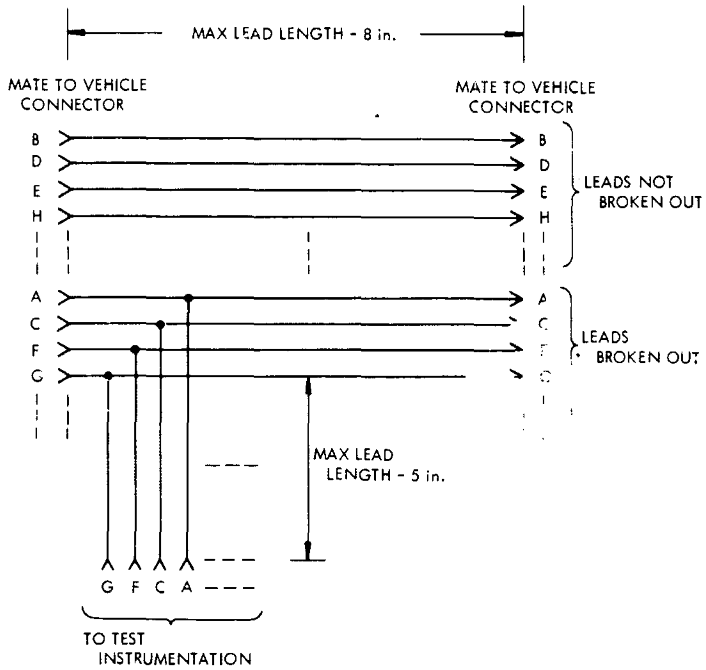

Fig. 2. Typical breakout adapter

the response of the system to EMI. Figure 2 illustrates a typical adapter. Two precautions were taken in making connections to the vehicle circuits. Indicating fuses were incorporated at the connecting points and each item of test equipment was isolated to prevent the introduction of noise via ground loops. A block diagram of a typical test point setup is shown in Fig. 3.

III. Test Series No. 1

Thirteen test points had been selected, in accordance with the criterion of MIL-E-6051C that "...the sum of all extraneous electromagnetic energy that may be introduced into the most critical point in a subsystem ..." (shall be) "... 6 dB below that desired input which would produce operation, actuation, or functioning ...." The factors governing selection were: sensitivity, inherent susceptibility, importance to mission objectives, and exposure to adverse electromagnetic environments. Equipment for only seven points was available and, therefore, the transient measurement test sequence had to be run twice. After its completion, other tests were run during the interval necessary for film development and reading. With the processing equipment on hand, each 400-ft reel took about 1½ h to develop. The time of each transient was manually noted on the film and the reel then placed on a Gerber optical reader. This reader was equipped with a scaling system reading out in arbitrary units. These values were converted to volts by comparison to calibrating pulses derived from the scope internal calibration source and registered on the film prior to starting the test. The amplitude and time of occurrence of the maximum transients at each test point for different portions of the test run, such as ascent and orbit, were obtained, and double these values used for the subsequent transient injection tests. Figure 4 shows a few of the typical transients recorded during this first set of tests.

IV. Changes in Technique for Test Series No. 2

Before another group of EMI compatibility tests was conducted on a different vehicle configuration, the techniques utilized and the results obtained during the first series were analyzed. The general results were satisfactory, but some detail changes in test equipment and procedures were indicated.

At various times in the test sequence, events were initiated at intervals as close as 0.2 s, giving too little displacement between successive trace starts and considerable overwrite. It was decided to use a film speed of 133 in./min to minimize the problem, although this introduced another complication. A 400-ft roll of film would now give only about 2160 s of running time and, although

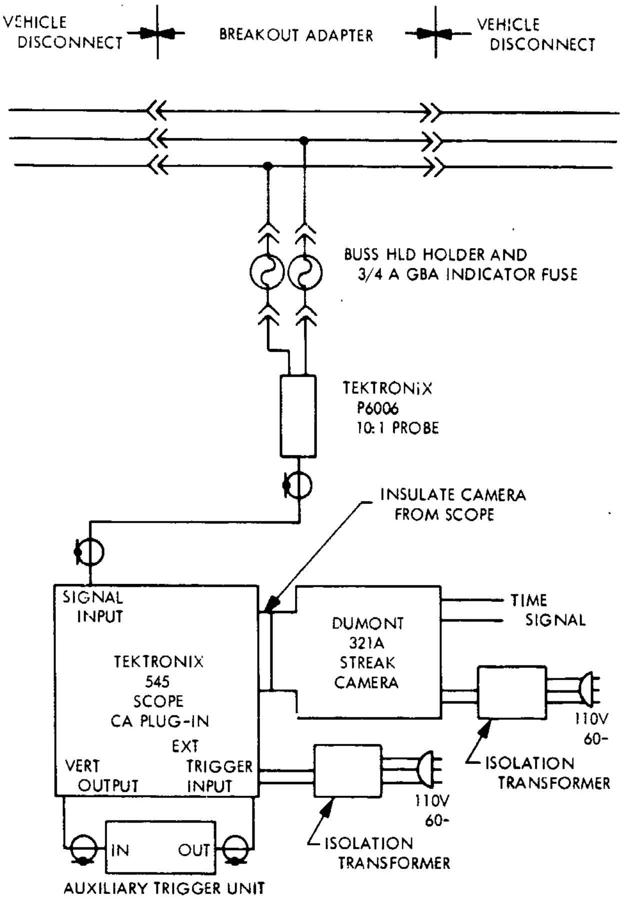

Fig. 3. Test setup for scope/camera transient noise measurement

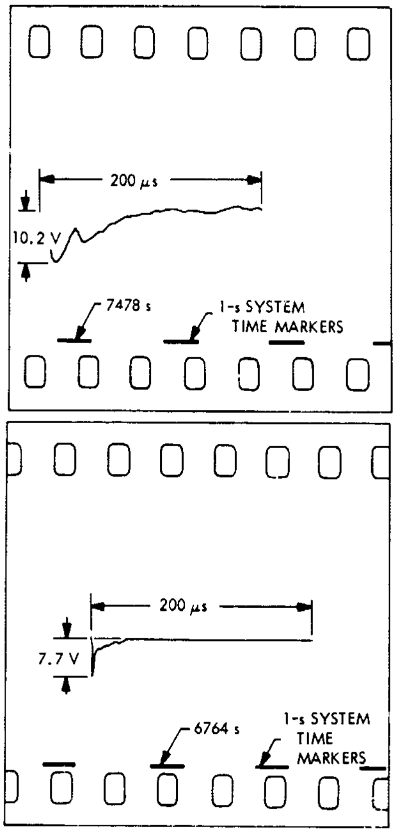

Fig. 4. Scope/camera typical transients

the new sequence was shortened to 5500 s, two "holds" or stops had to be made during the run to permit changing film magazines. To minimize hold time, a second set of loaded magazines was provided and the first set was reloaded during the second run interval.

Another change decided upon was the accomplishment of all transient measurements during one run. For this configuration, 11 critical points had been selected, as compared to the 13 measured in the first tests. An analysis showed that a saving could be made by renting four additional cameras plus one spare and performing only one run instead of two separate runs.

Another change made involved the type of phosphor in the scope cathode ray tubes (CRT). Comparison of the various reels from the previous tests revealed considerable variation in quality of trace reproduction. Investigation of the scopes and discussions with test equipment personnel revealed that we had three different phosphors, P-2, P-7, and P-11. The best phosphor to match the film used was demonstrated to be the P-11 because the other phosphors had too long a persistence when the intensity was high enough for good film trace density. It was decided to install CRTs with P-11 phosphors in all the scopes. With these changes incorporated, this second test series was also performed on schedule and gave better data results than the first.

V. A Simpler Approach to Transient Measurement

Reviewing the efforts expended during these tests, it was felt that the limit of practicality had been reached with the coverage of 11 test points. Further, the setup time and technical skills required for calibrations, scope control settings, camera adjustments, film loading and unloading, processing, data reduction, and the close monitoring needed during the actual test pointed up the desirability of finding some simpler approach to this problem of transient measurement.

A search disclosed a suitable transient measuring device manufactured by the Micro Instrument Company, Gardena, California. It is identified as a Model 5201B memory voltmeter, designed primarily for measuring, holding indefinitely, and displaying on a front panel meter the peak voltage of a single or repetitive pulse. However, it also has simultaneous plus and minus ac analog outputs, proportional to the amplitudes of the input signals, which can be used to drive a recorder, making it well suited for our application.

The unit will measure transients or pulses from dc to 50 ns. It has voltage ranges of 3, 10, 30, 100, 300, and 1000 V, with an input impedance varying from 10 MΩ (1000-V range) to 30 kΩ (3-V range). Reset time is approximately 10 μs, with no deadtime or loss of transients during reset. A mode switch permits either ac or dc coupling of the input, and pulse stretching circuitry holds the transient peak amplitudes long enough for recording on an oscillograph. The instrument is housed in a portable case.

The input is a single-ended BNC connector, with return connected to case and ground. However, the unit can be obtained with floating input and output. This configuration should be used to prevent undesired interconnection of vehicle circuits and ground loops. A low-capacity coaxial cable such as RG-62/U should be used for an input lead if any appreciable length is required.

A number of these monitors were used for the measurement of transients during the performance of a few special systems tests. The voltmeter outputs were connected, along with a system time pulse, to a Consolidated Electrodynamics (CEC) recording oscillograph equipped with 2.5-kHz galvanometers. Figure 5 shows the test setup used; Fig. 6 shows a portion of typical traces. The results were very satisfactory. In addition, the instrumentation arrangement was much simpler to connect up, calibrate, and monitor than the system used previously. The data reduction task was also much simplified.

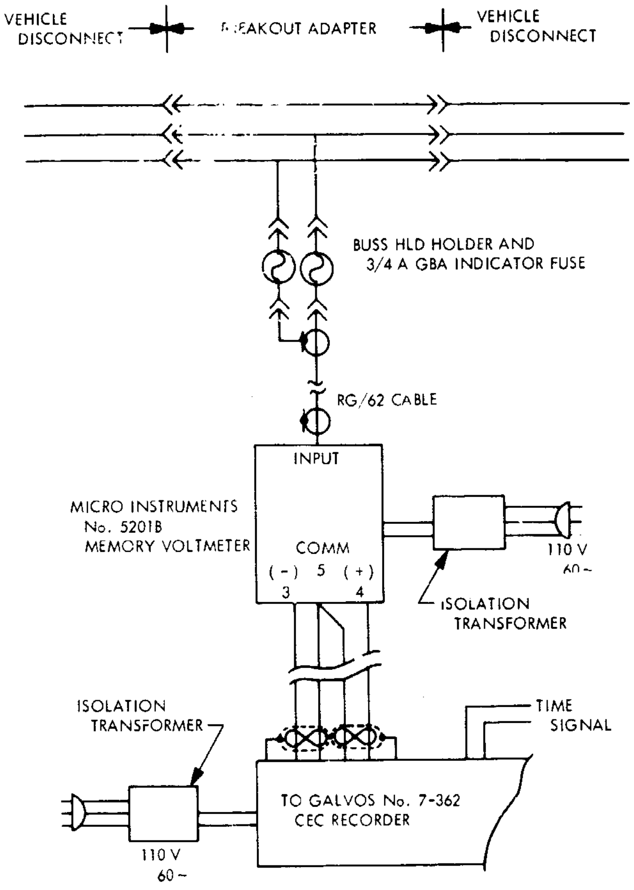

Fig. 5. Test setup for memory voltmeter/recorder transient noise measurement

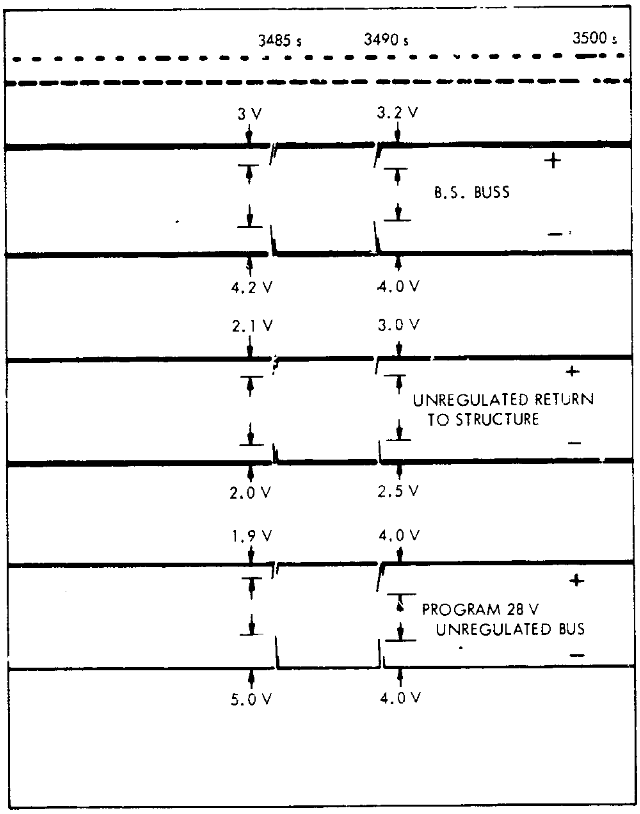

Fig. 6. Memory voltmeter/CEC transient record

VI. Conclusion

Two methods of transient voltage measurement at selected critical points in an aerospace vehicle are described in this paper. These measurements are for the purpose of injecting 6-dB-higher voltages into the vehicle to demonstrate compliance with specification MIL-E-6051C. Both methods have given positive results in attaining the required objective, but the memory voltmeter/oscillograph combination is preferred because of its simplicity. We plan to use this latter method in future EMI system compatibility tests.

Discussion

Paul P. Monroe: Can you tell what were the frequency components in this?

Bernard Schenker: We made no attempt to analyze the frequency components.

Paul P. Monroe: What does your compatibility represent in this case then, as far as suppression of interference is concerned?

Bernard Schenker: Are you talking about the first record we had?

Paul P. Monroe: Let's take an overall picture. First you are representing voltage amplitude as high as 10 V. Suppose you had a frequency band running up to 100 kHz and a receiver on board with a sensitivity possibly from −70 up to 100 dBm. What would happen if you had that receiver on at that time? It would be completely blanketed and you couldn't hear any communication. Any data would be lost. This is what I am trying to bring out: what are we proving with that type suppression?

Bernard Schenker: Let me point out that we use for our reinjection the standard specification spike with the 10-μs base and, theoretically, a very short rise time, but practically it is probably a fraction of a microsecond rise time. I know there have been attempts to become sophisticated and develop spike generators that would attempt to provide complex wave shapes. But as far as I know, there is nothing generally and simply available, and we use the standard methods.

Paul P. Monroe: Well, I am trying to point out that this is where the difficulties lie in noise suppression in space vehicles. Until now we have been interested only in suppressing noises of a certain magnitude which would trigger squibs and things of that sort. No effort has been spent to establish suppression levels at microvolts. This will have to be done in the future for us to have proper data transmission from space. If we go that route, that is what I would call a good RF suppression system–not just suppressing noises that would trigger squibs or would cause a premature firing of a certain mechanism in the boosters. We have to consider the payload. After all, we are sending up payloads to get certain data back. But if inside the space capsule you have that sort of magnitude of noise, what will we be getting back from space in the form of data?

Bernard Schenker: Our problem here was proving our compatibility and proving that we had a margin. We've shown that we have a functional compatibility. We've had no malfunctions on equipments, and now we are attempting to show that there is some margin there so that should we get some degradation or variation from vehicle to vehicle, it will still operate.

Paul P. Monroe: That's correct; I agree with you. But what I am trying to point up is you were only concerned with equipment pertaining to boosters and squibs. You left out completely communication equipment or scientific equipment on board. This is the main point.

Bernard Schenker: We are getting into another area now. All I was attempting to do was to show a measurement technique. Perhaps someone would care to discuss the philosophies of suppression. I don't have a fast answer for you on that particular question.

Gurdip S. Saran: You mentioned 11 and 13 critical points and then you discussed three of those. Would it be possible for you to point out your other critical test points or the criteria that you used to pick those particular critical points for testing?

Bernard Schenker: I'm going to take refuge there in that the program I was working on was a classified one. I'm playing safe in not getting involved in trying to describe to you or give you all the points that we actually measured. The points in the figure were not obtained during a normal MIL-E-6051C systems compatibility test. As I mentioned, this was a special test that we had run, for other purposes. Of course, one of the typical or invariable test points that you pick is the program or main dc unregulated bus. I think it's obvious here that this particular power subsystem is one which interfaces with every other subsystem on the vehicle, so it is only natural that we will consider this a critical point, look at the transients that exist at that point, and then inject our 6-dB-higher levels at that same point because then all the other subsystems would be subjected to it.

William Lash: In answer to the question that was asked of you, regarding what we are doing about the transients in reducing the amount of noise that's developed that bothers the experiment, I think again that we are talking about apples and oranges. The concern with your particular application and with most applications is with the booster because of the high transient requirement of suppression for relay latching in order to get the experiment up into space. We must go through the boost phase, where we have very high energies, in positioning our basic boosters and massive power switching in engine starting. We must live with those and then when we do get into the operational phase of the experiment, we must shut down those equipments that will bother the experiment. One of the other factors that we must consider is that we cannot shut down all equipment aboard the spacecraft. There still has to be a certain amount of operational hardware. So we deal with the transient. The only way we can handle a transient, which is nothing more than a *di/dt* problem, is to add additional circuitry to reduce the energy level or stretch out the time so that you do not develop that kind of voltage into the circuitry. It takes a certain amount of intuitive feeling by the project people in order to budget the extra money and allow the weight to be added to the spacecraft to reduce these energy levels.

Discussion (contd)

James H. Jacquette: I was wondering what was the maximum level of transient you measured under any condition?

Bernard Schenker: We have seen transients in the vehicle as high as, and this is a pretty rough figure, about 40 V.

James H. Jacquette: I was interested in what vintage of microvoltmeter you were using? How old was this instrument at the time you were using it? The reason I ask is I evaluated one about a year and a half ago and concluded it was unsatisfactory for these types of measurements. I was wondering if you were using a more recent model, on which they had made some improvements.

Bernard Schenker: They did have a few difficulties with certain of the circuits in there and they have made changes. It is still the same model number. They've made card changes. As a matter of fact we had a few of the early ones and we sent them back for these changes.

James H. Jacquette: Did they make any changes in the input attenuator?

Bernard Schenker: Yes, they have.

James H. Jacquette: Do they offer any additional probes, such as Tektronix would have, probes that are compensated for use with their input circuitry that would provide an all-pass network?

Bernard Schenker: Additional probes are not available as far as I know.

PRECEDING PAGE BLANK NOT FILMED.

N69-25440

Spacecraft Interface Circuitry Sensitivity Analysis

Albert C. Whittlesey
Jet Propulsion Laboratory
Pasadena, California

I. Introduction

The study presented here concerns our *Mariner* Mars 1964 spacecraft. The study was done after the spacecraft was conceived, designed, constructed, tested, and launched into space. It was thought that a fairly thorough examination of conducted interference problems on the *Mariner* 1964 spacecraft would benefit other *Mariner* projects because of the similarity of the basic design. We limited ourselves to intersubsystem problems because of the way we build them at the Jet Propulsion Laboratory.

Each of the 20 or so subsystems is subcontracted out to a different organization. Usually most of the self-compatibility problems in these subsystems are taken care of during the bench testing. The major problems come when we try to integrate the subsystems. Because of the heavy impact of problems discovered during the system level testing, we decided it would be worthwhile to have a uniform susceptibility criterion that all circuit designers could work toward. To give an overall picture of the effort, I'll briefly review what we did.

First, we looked through all the test records to identify any problems which were called crosstalk, ground noise, noise spikes, or problems of that sort that showed up during system testing. We then made a list of all these circuits. Next, we listed comparable circuits performing similar functions which had not had problems during the system testing. We then made a comparative analysis of these circuits to determine if there were any differences in the sensitivity of the circuits.

II. Methods of Analysis

There were two methods of analysis used – one termed "simple," the other "detailed." The simple analysis was adequate for a quick cull of many circuits using the minimal information usually available to a person not intimate with the design of these circuits. The detailed analysis was a normal circuit analysis. The net result was a sensitivity criterion which discriminated between circuits that had had problems to the extent that they required a maximum redesign; and yet a minimum redesign was required of circuits which had not demonstrated problems in the past. In other words, we wanted this criterion to have a minimum impact on circuits which apparently don't cause problems. With that introduction, I'll trace the steps we went through to reach our conclusions.

Figure 1 shows the *Mariner* 1964 spacecraft from the top. The various subsystems are located in eight sections which form an octagon around the main frame and are

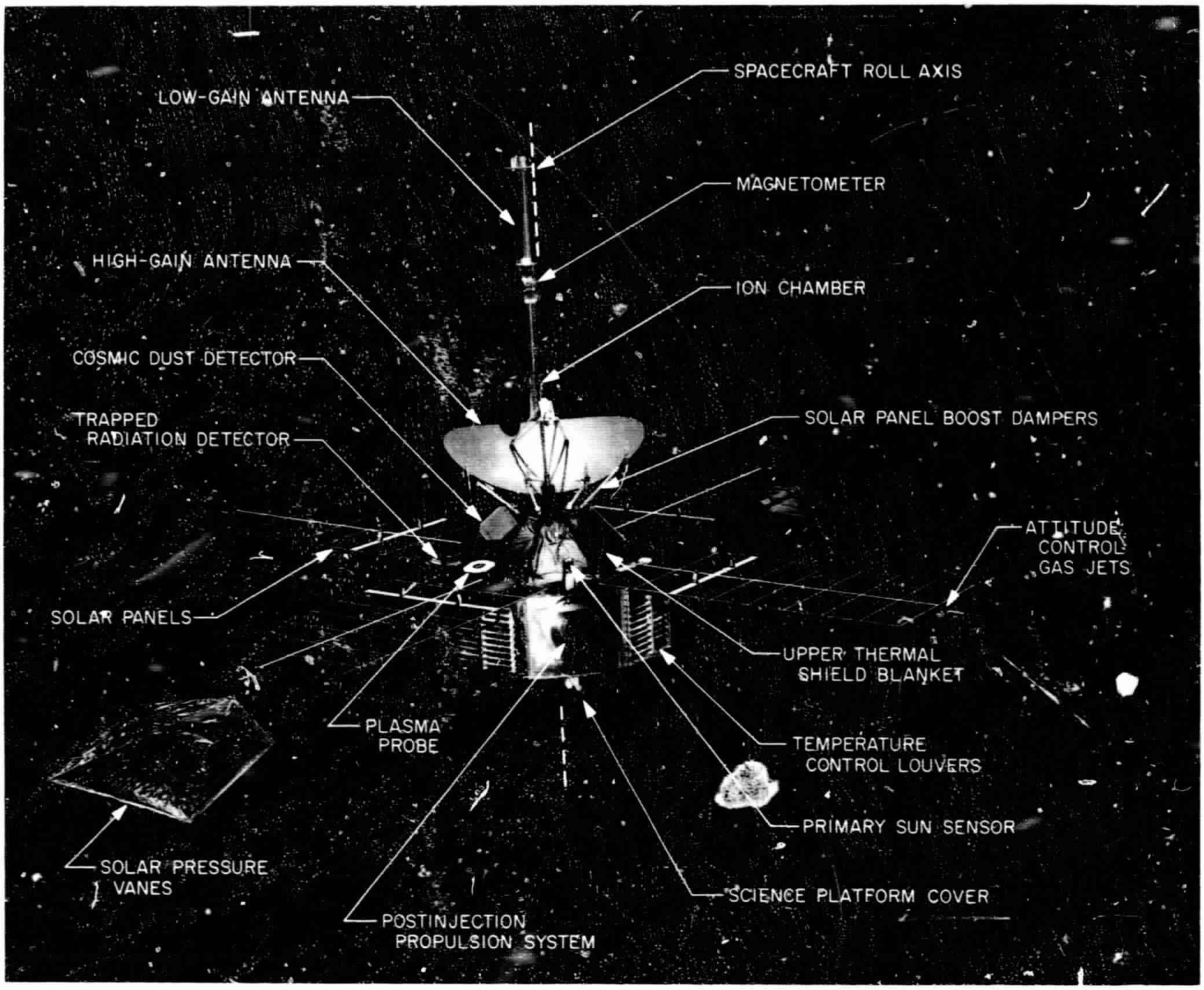

Fig. 1. Top view of *Mariner* Mars 1964 spacecraft

bolted onto the outside of the spacecraft. The wiring is connected on the interior of these eight packages in what we call a ring harness (Fig. 2), which makes a loop around the interior with various taps out to each of the subsystems. On this type of wiring, a pretty large signal on one wire can be transmitted over to some of the other wires. That's the kind of noise we are talking about here. Figure 3 is a block diagram of the *Mariner* 1969 spacecraft, which is quite similar to the *Mariner* 1964. With the exception of the science instruments, the two are identical. They have all sorts of interconnections. This is a typical block diagram of a space vehicle. Note in particular the CC&S and the flight command subsystem. They have important interfaces with a large number of the other subsystems.

A. Review of Problem/Failure Reports

The starting point on this study was to examine all system-level problem/failure reports (P/FRs). Figure 4 shows an example of a problem/failure report from the *Mariner* 1969 program. The problem in this case was that the event decode register would not load and sequence properly. Random counts and resetting occurred. It was verified later that the OSE output buffers drew in excess of 600 mA during on and off transitions, causing severe ground noise to occur. This resulted in a typical noise reset and multiple clock problem. Figure 5 is the first page of a vendor problem/failure report. The solution in this case was to instruct all test inspectors and calibrators to use the filters in the circuit, and in the future they are

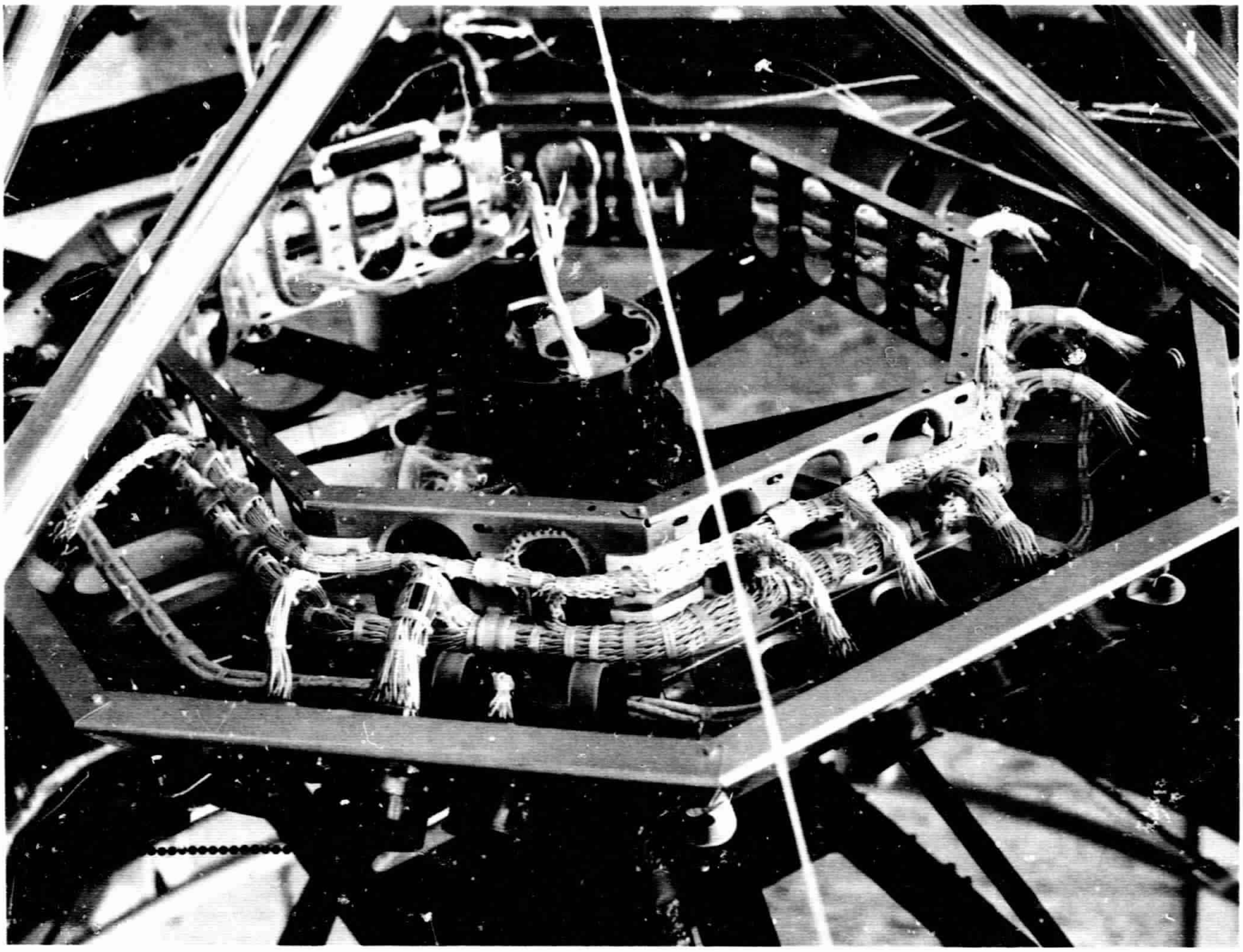

Fig. 2. View of upper ring harness and tray installation in *Mariner* Mars 1964 spacecraft

going to do this when they make this kind of measurement. It is not a spacecraft problem, but it shows a typical solution to the kind of problems we are working on.

In addition to the limitation of using only system noise problems, we limited ourselves to circuits for which we could find an adequate circuit schematic and for which we could find a control group of nonproblem circuits which performed similar functions. We eventually settled on all the circuits interfacing with the CC&S and command subsystems. The net collection was a group of about 70 circuits; six of these circuits had eight P/FRs written against them, and the remainder were used as a control group. The circuits are principally digital-type, wherein a signal is sent by a switch closure for a certain length of time. On this spacecraft the closure duration and the initial time were usually not very significant.

B. Simple Circuit Analysis

We then analyzed the sensitivity of these circuits – trying to do it the easy way first, by the simple circuit analysis, because it was quick and made use of readily available information presented on circuit data sheets.

Figure 6 shows a circuit data sheet which is proposed for each of the interfaces between subsystems on the spacecraft. It shows a waveform, certain characteristics, times, and currents, together with the last stage from one subsystem and the initial stage of another subsystem. Circuit 02 is called the universal isolated switch because the signal comes in on the left as an ac transformer coupled signal; it is rectified and turns on the transistor, which acts like a switch when there is an event. The ground is common to all the circuits.

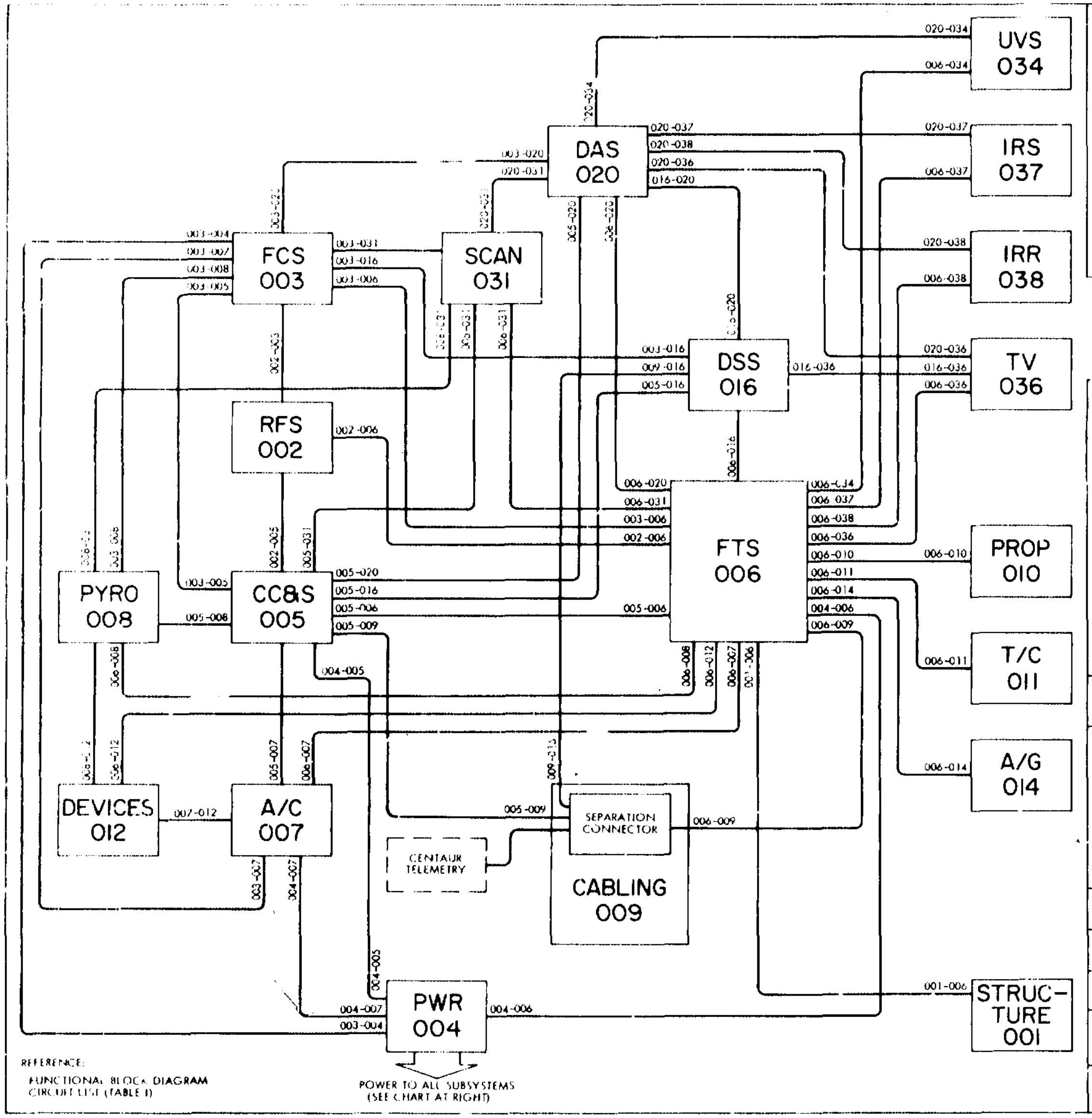

REFERENCE:
FUNCTIONAL BLOCK DIAGRAM
CIRCUIT LIST (TABLE I)

SUBSYSTEM KEY

001	—	STRUCTURE	011	T/C	TEMPERATURE CONTROL
002	RFS	RADIO FREQUENCY	012	DEVICES	MECHANICAL DEVICES
003	FCS	FLIGHT COMMAND	014	A/G	APPROACH GUIDANCE
004	PWR	POWER	016	DSS	DATA STORAGE
005	CC&S	CENTRAL COMPUTER AND SEQUENCER	020	DAS	DATA AUTOMATION
006	FTS	FLIGHT TELEMETRY	031	SCAN	SCAN CONTROL
007	A/C	ATTITUDE CONTROL	034	UVS	ULTRAVIOLET SPECTROMETER
008	PYRO	PYROTECHNIC	036	TV	TELEVISION
009	—	CABLING	037	IRS	INFRARED SPECTROMETER
010	PROP	PROPULSION	038	IRR	INFRARED RADIOMETER

POWER ROUTING TO ALL SUBSYSTEMS

POWER FROM POWER SUBSYSTEM	CIRCUIT	DESTINATION
POWER, 2.4 KHz	002-004	RFS
	003-004	FCS
	004-005	CC&S
	004-006	FTS
	004-007	A/C
	004-008	PYRO
	004-016	DSS
	004-031	SCAN
POWER, 2.4 KHz (SWITCHED)	004-011	T/C
	004-014	A/G
ENCOUNTER POWER, 2.4 KHz	004-008	PYRO
	004-020	DAS
	004-031	SCAN
	004-034	UVS
	004-036	TV
	004-037	IRS
	004-038	IRR
MANEUVER POWER, 2.4 KHz	004-007	A/C
DIRECT CURRENT	002-004	RFS
POWER, 400 Hz SINGLE-PHASE	004-016	DSS
ENCOUNTER POWER, 400 Hz SINGLE PHASE	004-031	SCAN
	004-037	IRS
POWER [illegible]-PHASE	004-007	A/C

Fig. 3. ***Mariner* Mars 1969 functional block diagram**

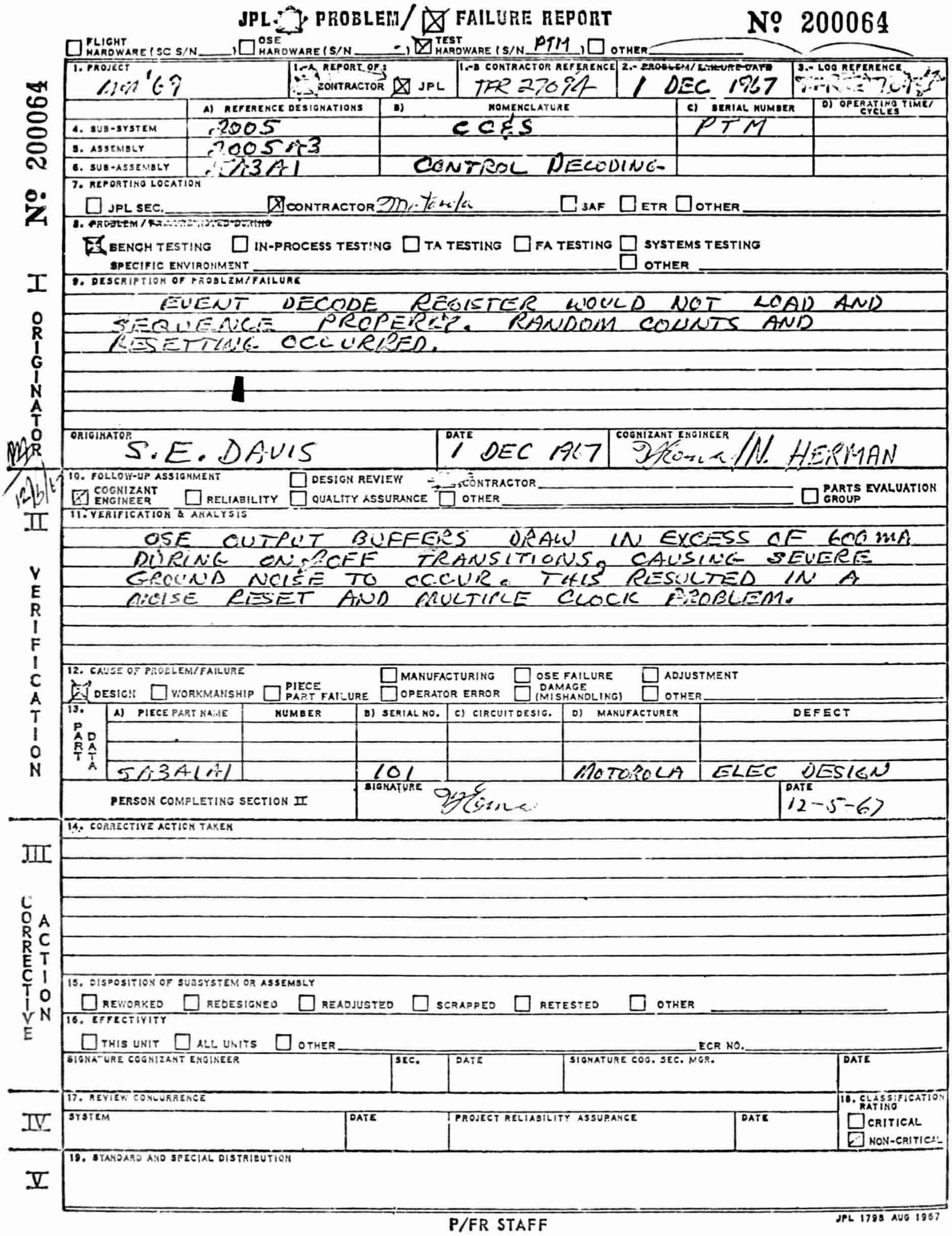

JPL PROBLEM/ ☒ FAILURE REPORT **Nº 200064**

☐ FLIGHT HARDWARE (SC S/N____) ☐ OSE HARDWARE (S/N –) ☒ TEST HARDWARE (S/N PTM) ☐ OTHER

1. PROJECT MM '69	1.-A REPORT OF: ☐ CONTRACTOR ☒ JPL	1.-B CONTRACTOR REFERENCE TFR 27094	2.- ~~PROBLEM/FAILURE DATE~~ 1 DEC 1967	3.- LOG REFERENCE [illegible]

	A) REFERENCE DESIGNATIONS	B) NOMENCLATURE	C) SERIAL NUMBER	D) OPERATING TIME/ CYCLES
4. SUB-SYSTEM	2005	CC&S	PTM	
5. ASSEMBLY	2005A3			
6. SUB-ASSEMBLY	5A3A1	CONTROL DECODING		

7. REPORTING LOCATION
☐ JPL SEC.____ ☒ CONTRACTOR Motorola ☐ SAF ☐ ETR ☐ OTHER____

8. ~~PROBLEM / FAILURE NOTED DURING~~
☒ BENCH TESTING ☐ IN-PROCESS TESTING ☐ TA TESTING ☐ FA TESTING ☐ SYSTEMS TESTING
SPECIFIC ENVIRONMENT____ ☐ OTHER____

I ORIGINATOR

9. DESCRIPTION OF PROBLEM/FAILURE
EVENT DECODE REGISTER WOULD NOT LOAD AND SEQUENCE PROPERLY. RANDOM COUNTS AND RESETTING OCCURRED.

ORIGINATOR S. E. DAVIS
DATE 1 DEC 1967
COGNIZANT ENGINEER N. HERMAN

12/6/67

10. FOLLOW-UP ASSIGNMENT
☒ COGNIZANT ENGINEER ☐ RELIABILITY ☐ DESIGN REVIEW ☐ QUALITY ASSURANCE ☐ CONTRACTOR____ ☐ OTHER____ ☐ PARTS EVALUATION GROUP

II VERIFICATION

11. VERIFICATION & ANALYSIS
OSE OUTPUT BUFFERS DRAW IN EXCESS OF 600 MA DURING ON/OFF TRANSITIONS, CAUSING SEVERE GROUND NOISE TO OCCUR. THIS RESULTED IN A NOISE RESET AND MULTIPLE CLOCK PROBLEM.

12. CAUSE OF PROBLEM/FAILURE
☒ DESIGN ☐ WORKMANSHIP ☐ PIECE PART FAILURE ☐ MANUFACTURING ☐ OPERATOR ERROR ☐ OSE FAILURE ☐ DAMAGE (MISHANDLING) ☐ ADJUSTMENT ☐ OTHER____

13. PART DATA	A) PIECE PART NAME	NUMBER	B) SERIAL NO.	C) CIRCUIT DESIG.	D) MANUFACTURER	DEFECT
	5A3A1A1		101		MOTOROLA	ELEC DESIGN

PERSON COMPLETING SECTION II — SIGNATURE — DATE 12-5-67

III CORRECTIVE ACTION

14. CORRECTIVE ACTION TAKEN

15. DISPOSITION OF SUBSYSTEM OR ASSEMBLY
☐ REWORKED ☐ REDESIGNED ☐ READJUSTED ☐ SCRAPPED ☐ RETESTED ☐ OTHER____

16. EFFECTIVITY
☐ THIS UNIT ☐ ALL UNITS ☐ OTHER____ ECR NO.____

SIGNATURE COGNIZANT ENGINEER	SEC.	DATE	SIGNATURE COG. SEC. MGR.	DATE

IV

17. REVIEW CONCURRENCE

SYSTEM	DATE	PROJECT RELIABILITY ASSURANCE	DATE	18. CLASSIFICATION RATING
				☐ CRITICAL ☒ NON-CRITICAL

V

19. STANDARD AND SPECIAL DISTRIBUTION

P/FR STAFF

JPL 1795 AUG 1967

Fig. 4. JPL problem/failure report on event decode register

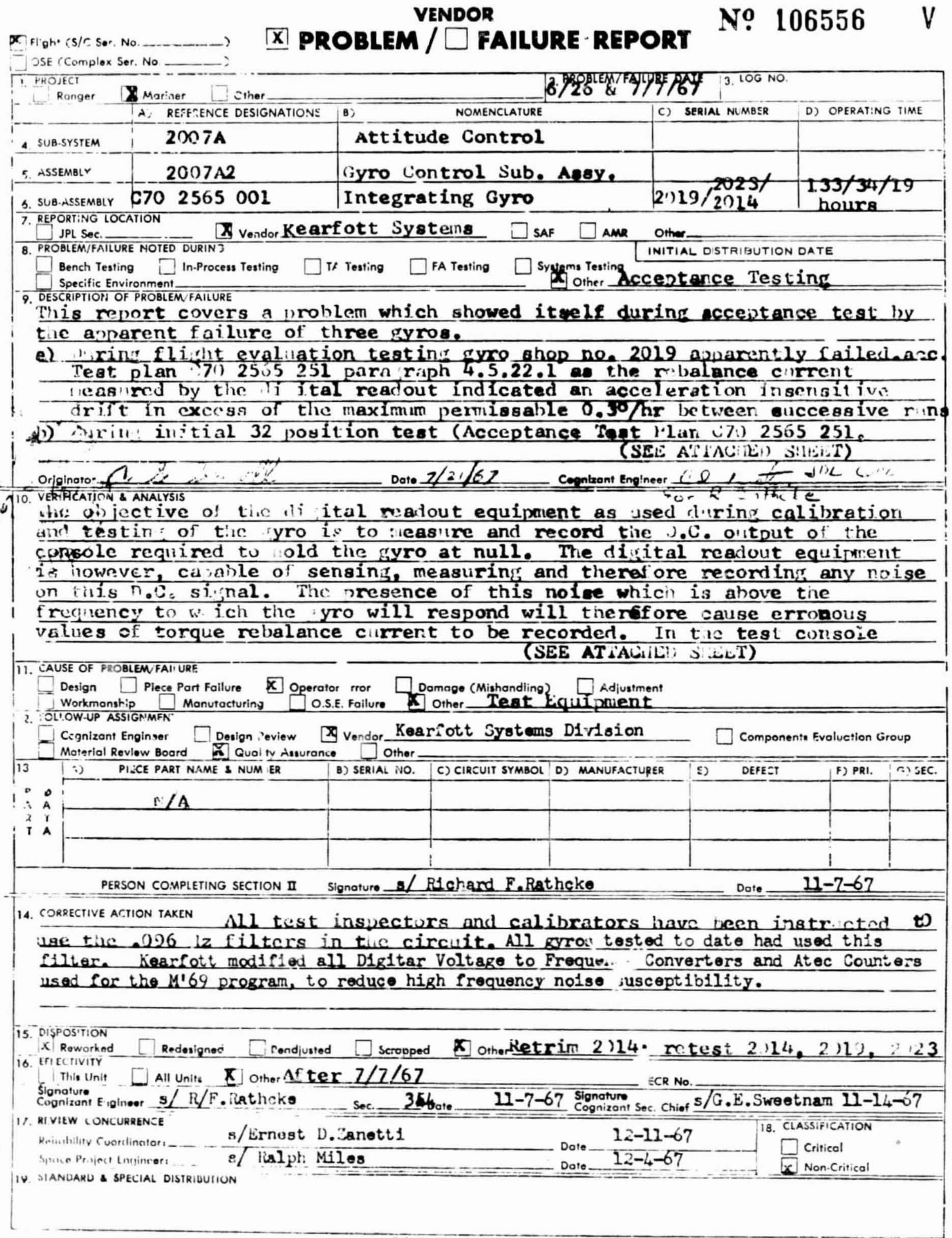

VENDOR

☒ PROBLEM / ☐ FAILURE REPORT

Nº 106556 V

☒ Flight (S/C Ser. No. ______)
☐ OSE (Complex Ser. No. ______)

1. PROJECT ☐ Ranger ☒ Mariner ☐ Other

2. PROBLEM/FAILURE DATE 6/26 & 7/7/67

3. LOG NO.

	A) REFERENCE DESIGNATIONS	B) NOMENCLATURE	C) SERIAL NUMBER	D) OPERATING TIME
4. SUB-SYSTEM	2007A	Attitude Control		
5. ASSEMBLY	2007A2	Gyro Control Sub. Assy.		
6. SUB-ASSEMBLY	C70 2565 001	Integrating Gyro	2019/2023/2014	133/34/19 hours

7. REPORTING LOCATION ☐ JPL Sec. ☒ Vendor Kearfott Systems ☐ SAF ☐ AMR Other

8. PROBLEM/FAILURE NOTED DURING ☐ Bench Testing ☐ In-Process Testing ☐ TA Testing ☐ FA Testing ☐ Systems Testing ☐ Specific Environment ☒ Other Acceptance Testing

INITIAL DISTRIBUTION DATE

I

9. DESCRIPTION OF PROBLEM/FAILURE

This report covers a problem which showed itself during acceptance test by the apparent failure of three gyros.

a) During flight evaluation testing gyro shop no. 2019 apparently failed.acc. Test plan C70 2565 251 paragraph 4.5.22.1 as the rebalance current measured by the digital readout indicated an acceleration insensitive drift in excess of the maximum permissable 0.3°/hr between successive runs

b) During initial 32 position test (Acceptance Test Plan C70 2565 251.

(SEE ATTACHED SHEET)

Originator

Date 7/21/67

Cognizant Engineer JPL

10. VERIFICATION & ANALYSIS

The objective of the digital readout equipment as used during calibration and testing of the gyro is to measure and record the D.C. output of the console required to hold the gyro at null. The digital readout equipment is however, capable of sensing, measuring and therefore recording any noise on this D.C. signal. The presence of this noise which is above the frequency to which the gyro will respond will therefore cause erronous values of torque rebalance current to be recorded. In the test console

(SEE ATTACHED SHEET)

11. CAUSE OF PROBLEM/FAILURE ☐ Design ☐ Piece Part Failure ☒ Operator Error ☐ Damage (Mishandling) ☐ Adjustment ☐ Workmanship ☐ Manufacturing ☐ O.S.E. Failure ☒ Other Test Equipment

12. FOLLOW-UP ASSIGNMENT ☐ Cognizant Engineer ☐ Design Review ☒ Vendor Kearfott Systems Division ☐ Components Evaluation Group ☐ Material Review Board ☒ Quality Assurance ☐ Other

13 PART DATA	A) PIECE PART NAME & NUMBER	B) SERIAL NO.	C) CIRCUIT SYMBOL	D) MANUFACTURER	E) DEFECT	F) PRI.	G) SEC.
	N/A						

PERSON COMPLETING SECTION II Signature s/ Richard F.Rathcke Date 11-7-67

14. CORRECTIVE ACTION TAKEN All test inspectors and calibrators have been instructed to use the .096 Hz filters in the circuit. All gyros tested to date had used this filter. Kearfott modified all Digitar Voltage to Frequency Converters and Atec Counters used for the M'69 program, to reduce high frequency noise susceptibility.

III

15. DISPOSITION ☒ Reworked ☐ Redesigned ☐ Readjusted ☐ Scrapped ☒ Other Retrim 2014. retest 2014, 2019, 2023

16. EFFECTIVITY ☐ This Unit ☐ All Units ☒ Other After 7/7/67 ECR No.

Signature Cognizant Engineer s/ R/F.Rathcke Sec. 354 Date 11-7-67 Signature Cognizant Sec. Chief s/G.E.Sweetnam 11-14-67

17. REVIEW CONCURRENCE

Reliability Coordinator: s/Ernest D.Zanetti Date 12-11-67

Space Project Engineer: s/ Ralph Miles Date 12-4-67

IV

18. CLASSIFICATION ☐ Critical ☒ Non-Critical

19. STANDARD & SPECIAL DISTRIBUTION

V

P/FR RELIABILITY STAFF

JPL 1798 APR 64

Fig. 5. Vendor problem/failure report on gyro subassembly

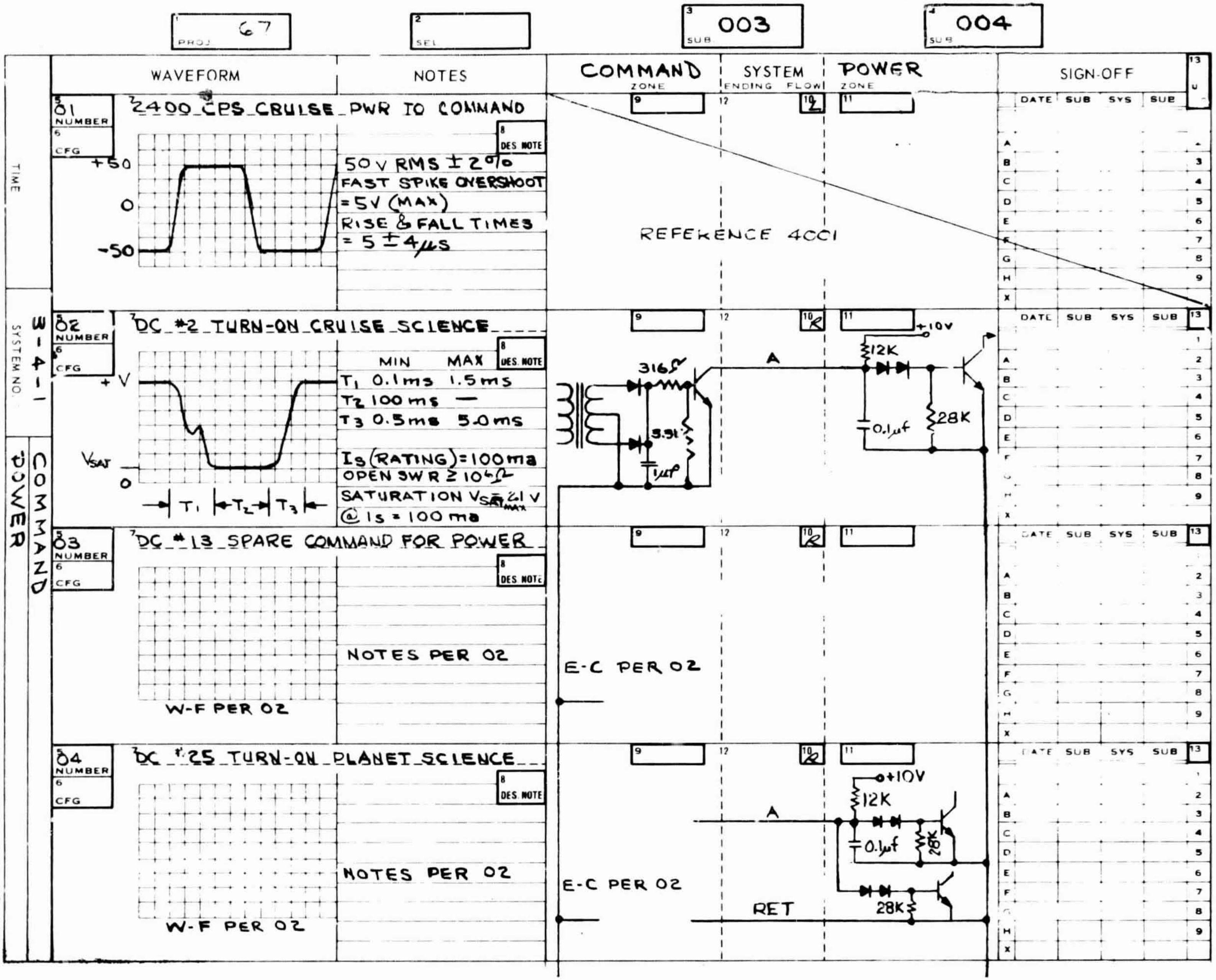

PROJ 67

SEL

SUB 003

SUB 004

SYSTEM NO. 3-4-1

COMMAND POWER

01 2400 CPS CRUISE PWR TO COMMAND

50 V RMS ± 2%

FAST SPIKE OVERSHOOT = 5V (MAX)

RISE & FALL TIMES = 5 ± 4 μs

REFERENCE 4001

02 DC #2 TURN-ON CRUISE SCIENCE

	MIN	MAX
T_1	0.1 ms	1.5 ms
T_2	100 ms	—
T_3	0.5 ms	5.0 ms

I_S (RATING) = 100 ma

OPEN SW R ≥ $10^6\ \Omega$

SATURATION $V_{SAT_{MAX}}$ ≤ 1 V

@ I_S = 100 ma

03 DC #13 SPARE COMMAND FOR POWER

NOTES PER 02

W-F PER 02

E-C PER 02

04 DC #25 TURN-ON PLANET SCIENCE

NOTES PER 02

W-F PER 02

E-C PER 02

Fig. 6. Typical circuit data sheet

Figure 7 shows how the simple analysis was made. The analysis yields the voltage change at the input to the circuit (ΔE) as shown on the typical waveform. In this case, it is 10 V. It shows the change in line current, approximately 4.55 μA. The power, which is the product $\Delta E \Delta I$, is 45.5 μW. The actuation time, which is a measure of the response time of the circuit, is determined. In general, this is quite difficult. In this case we used the rise time of the waveform as presented on the circuit data sheet. The product of the power and actuation time gave an approximate measure of the energy required to actuate the circuit.

C. Detailed Circuit Analysis

In the case of relay circuits, the actuation time was usually estimated to be on the order of milliseconds; for transistor circuits, the actuation time was derived from the waveform that is presented on the circuit data sheets. Because there was uncertainty in the validity of the simple circuit analysis, a more detailed circuit analysis was made on a limited number of circuits, and the results were compared with those obtained from the simple analysis.

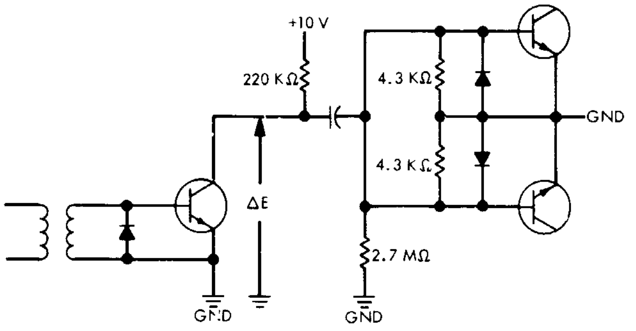

SCHEMATIC FROM CIRCUIT DATA SHEET

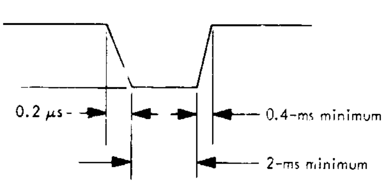

I! . WAVEFORM (ΔE)

SIMPLE ANALYSIS

CHANGE IN LINE VOLTAGE = ΔE = 10 V

CHANGE IN LINE CURRENT = ΔI = $\Delta E/220\,K$ 4.55 μA

POWER $\Delta E \Delta I$ (10 V) (4.55 μA) = 45.5 μW

TIME RISE TIME = 0.2 μs

ENERGY = POWER × RISE TIME (45.5μ) (0.2μ) = 9.1×10^{-12}

= 9.1 pJ

Fig. 7. Example of simple circuit analysis

Here use was made of schematics, component data sheets and the component parameter values as presented on the manufacturer's specification sheets. In one important respect this analysis differed from the simple case, because it examined the sensitivity of the circuit both in the presence and absence of a signal. It does not include the sensitivity during the leading or trailing edge of a signal, which would further complicate the process. Figure 8 is the first page of a circuit analysis. This circuit, which was called 34(a), was an OSE circuit which caused two failures due to its susceptibility to noise appearing on the spacecraft ground lines. This is a switch closure operation.

We tried to have a more exact analysis of what it took to actuate this circuit. The parameters derived here are the same as on a simple analysis (Table 1). We have here a comparison of the results of the simple and the detailed analyses. In most cases, there was reasonable correlation all the way down. In some cases the circuit was analyzed in two different modes, with and without a signal. The sensitivity can vary considerably between the two states, especially the energy. So, what may appear to be a safe circuit while it is just sitting there may actually cause problems when it is being operated.

III. Development of Sensitivity Criterion

In general, the simple analysis did give results fairly close to those calculated by the detailed analysis. So we concluded that the simple analysis is valid for a general survey of most circuits. However, to do a really good job, the circuit must be analyzed in both the on and off states or these may be misleading results. The circuits not capable of being analyzed by the simple methods must be given a detailed analysis or you must measure the sensitivity of the circuit. The results of the simple analysis are presented in Tables 2 through 5. Table 2 shows how the circuits ranked with respect to current sensitivity. Those currents which required the least amount of current to be actuated are at the top, the ones needing the most current at the bottom. We checked to determine if there were P/FRs associated with these circuits. The P/FRs are scattered throughout the range of the current sensitivities. Power sensitivity is shown in Table 3. Again, power is not too well correlated. The most sensitive circuits did have P/FRs associated with them; so power is

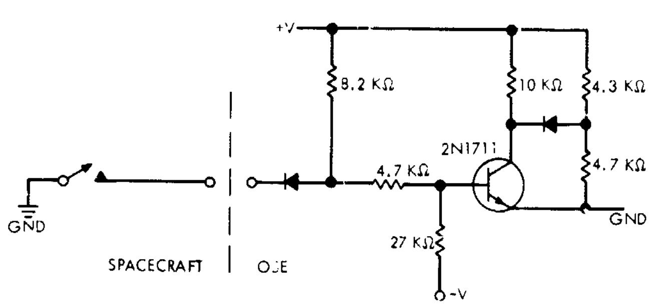

SCHEMATIC OF CIRCUIT 34 (A)
(THIS IS AN OSE CIRCUIT WHICH CAUSED TWO FAILURES
DUE TO ITS SUSCEPTIBILITY TO NOISE APPEARING
ON THE SPACECRAFT GROUND LINES)

THE FOLLOWING CALCULATIONS DETERMINE THE MAGNITUDE AND DURATION OF A STEP FUNCTION INPUT WHICH WILL TURN THE 2N1711 TO THE CONDUCTING STATE IF IT IS INITIALLY IN THE OFF STATE. THIS ANALYSIS CORRESPONDS TO DETERMINING THE MAGNITUDE OF THE TRANSIENT DEVELOPED BETWEEN THE SPACECRAFT AND OSE GROUNDS. THE SWITCH POSITION SHOWN CORRESPONDS TO THE ON CONDITION OF THE 2N1711. WHEN THE 2N1711 IS SATURATED THE COLLECTOR CURRENT MAY BE EXPRESSED AS:

$$I_{C(SAT)} = \frac{V - V_{CE(SAT)}}{10\ K} + \frac{\frac{V(4.7\ K)}{4.7\ K + 4.3\ K} - V_{CE(SAT)} - V_D}{\frac{(4.3\ K)(4.7\ K)}{4.7\ K + 4.3\ K}}$$

WHERE V IS THE +28 SUPPLY, $V_{CE(SAT)}$ IS THE 2N1711 COLLECTOR TO EMITTER SATURATION VOLTAGE, AND V_D IS VOLTAGE DROP ACROSS THE DIODE IN COLLECTOR CIRCUIT.

Fig. 8. Example of detailed circuit analysis

definitely a consideration. Table 4 shows actuation time sensitivity. In actuation time we see that most of the P/FRs were with the most sensitive circuits. Similarly, with energy, in Table 5 we find that the most sensitive circuits had P/FRs against them, almost without exception.

Our conclusion here is that current and power have less correlation with P/FR frequency than time or energy. Voltage as a sensitivity parameter was omitted because these subsystems usually had common values of voltage. There wasn't much discrimination on the basis of voltage, although all the susceptibility tests have voltage written into them. Using the data presented here, an attempt was made to generate a set of constraints already met by circuits which had not had problems previously and a constraint which was not met by those circuits which appear to be sensitive to noise.

The format chosen was selected as follows. We didn't want to reject circuits out-of-hand with some arbitrary single criterion, so we tried to give the designers some choice. They had a choice of meeting some minimum actuation current, actuation power, actuation time, or actuation energy, where the current, power, time, and energy are chosen from the data that has been presented here. In order to find this cutoff point, several approaches were considered. For example, we considered using the maximum values that had ever been reported in a P/FR. We called this the envelope. Another approach was to take the median value of all the parameters for all circuits. In other words, half the circuits were more sensitive and half were less sensitive from that point. Other approaches such as taking 10 times the envelope value or some arbitrary number based on our feel for the subject were also considered. A summary of Tables 2–5 is presented in Table 6. The least sensitive circuit which had a P/FR written against it took 6 mA to actuate; the median was 4 mA. The P/FR circuits were more sensitive than 6 mA, took less than 40 mW of power, actuated faster than 2 μs, and took more than 0.04 μJ to be set off. Numbers for the median are also presented. We didn't decide to select any other numbers. In Table 7, we chose criteria based on the following: The circuit must be less sensitive than at least one of the envelope numbers presented in Table 6. In other words, it should take more than 6 mA to operate it, or more than 40 mW, or longer than 2 μs, or more than 0.04 μJ.

Table 1. Detailed analysis of circuit sensitivities

P/FR applicable	Circuit	State[a]	Sensitivity[b]									
			Voltage, V		Current		Power		Time		Energy	
			Detailed	Simple	Detailed	Simple	Detailed	Simple	Detailed	Simple	Detailed	Simple
No	17(a)[c]	No	6.0	—	6.2 mA	—	37 mW	—	1.63 ms	—	61 µJ	—
Yes	17(a)[c]	Yes	6.0	6.0	6.0 mA	6.0 mA	36 mW	36 mW	1 µs	2.2 ms	36 nJ	79 µJ
No	23	No	1.54	—	74.0 µA	—	0.1 mW	—	80 ns	—	9.12 pJ	—
No	23	Yes	4.63	6.0	0.463 mA	3.8 mA	2.1 mW	23 mW	150 ns	2 µs	318 pJ	46 nJ
No	34(a)	No	6.45	—	1.78 mA	—	11.5 mW	—	150 ns	—	1725 pJ	—
Yes	34(a)	Yes	5.3	5.0	1.55 mA	1.0 mA	8.25 mW	5 mW	96 ns	100 ns	780 pJ	500 pJ
No	34(b)	No	5.85	—	2.2 mA	—	12.8 mW	—	100 ns	—	1280 pJ	—
No	34(b)	Yes	5.3	5.0	1.55 mA	1.0 mA	8.2 mW	5 mW	109 ms	97 ms	895 µJ	485 µJ
Yes	35(a)	No	0.5	0.7	2.0 mA	1.2 mA	1 mW	0.84 mW	100 ns	100 ns	101 pJ	84 pJ
No	35(b)	No	9.7	10.7	1.8 mA	2.4 mA	17.5 mW	26 mW	30 µs	40 µs	0.18 µJ	1 µJ
No	36	No	5.3	—	2.8 mA	—	14.7 mW	—	75 ns	—	1100 pJ	—
Yes	36	Yes	1.4	6.0	1.0 mA	3.0 mA	1.4 mW	18 mW	40 ns	2 µs	58 pJ	36 nJ

[a] Yes indicates sensitivity calculated during presence of normal signal.
No indicates sensitivity calculated during absence of any signal on line.

[b] Detailed and simple analyses shown where applicable.

[c] Detailed analysis of circuit 17(a) was based on the P/FR and memo which indicated that noise was caused by sensitive source circuit.

Table 2. Current sensitivity vs P/FRs

Current sensitivity, mA	Circuit	Number of similar circuits	P/FRs
0.004	3(a)	2	Yes (2)
0.26	30	1	
0.3	2	1	
0.45	5	4	
0.50	29	1	
0.73	22	1	
0.83	6	5	
0.87	28	2	
0.9	24	1	
1	34(a)	1	Yes (2)
1	34(b)	1	
1.2	35(a)	1	Yes (2)
1.86	7	1	
1.86	8	2	
2.42	35(b)	1	
2.59	4	3	
3	36	1	Yes
3.3	26	1	
3.3	21	2	
3.8	23	2	
6	11	1	
6	12	1	
6	13	1	
6	17	1	
6	17(a)	1	Yes
7	10	6	
7.2	25	1	
10	3(b)	2	
30	31	4	
53	33	4	
88	32	1	
100	9	1	
100	15	1	
160	27	1	
170	14	4	
200	20	4	

Table 3. Power sensitivity vs P/FRs

Power sensitivity, W	Circuit	Number of similar circuits	P/FRs
0.045	3(a)	2	Yes (2)
0.84	35(a)	1	Yes (2)
1.74	28	2	
3.5	29	1	
4.2	2	1	
4.4	22	1	
4.5	5	4	
5	34(a)	1	Yes (2)
5	34(b)	1	
5.4	24	1	
6.76	30	1	
8.3	6	5	
18	36	1	Yes
20	26	1	
20	21	2	
23	23	2	
25.9	4	3	
26	35(b)	1	
36	11	1	
36	12	1	
36	13	1	
36	17	1	Yes
36	17(a)	1	
36	25	1	
42	10	6	
52	7	1	
52	8	2	
100	3(b)	2	
780	31	4	
1330	33	4	
1500	15	1	
2300	32	1	
2550	14	4	
2800	9	1	
3000	20	4	
4960	27	1	

Table 4. Time sensitivity vs P/FRs

Time sensitivity, μs	Circuit	Number of similar circuits	P/FRs
0.1	34(a)	1	Yes (2)
0.1	35(a)	1	Yes (2)
0.2	3(a)	2	Yes (2)
0.2	3(b)	2	
0.2	24	1	
0.2	25	1	
0.2	26	1	
2	8	2	
2	10	6	
2	11	1	
2	13	1	
2	23	2	
2	36	1	Yes
5	27	1	
20	33	4	
40	35(b)	1	
100	4	3	
100	6	5	
100	7	1	
100	9	1	
100	12	1	
100	15	1	
100	20	4	
100	21	2	
100	22	1	
100	29	1	
100	30	1	
1000	2	1	
1000	5	4	
1000	31	4	
1000	32	1	
2200	17	1	
2200	17(a)	1	Yes
3000	14	4	
3200	28	2	
9700	34(b)	1	

Table 5. Energy sensitivity vs P/FRs

Energy sensitivity, μJ	Circuit	Number of similar circuits	P/FRs
0.000009	3(a)	2	Yes (2)
0.00008	35(a)	1	Yes (2)
0.0005	34(a)	1	Yes (2)
0.001	24	1	
0.004	26	1	
0.007	25	1	
0.02	3(b)	2	
0.036	36	1	Yes
0.046	23	2	
0.07	11	1	
0.07	13	1	
0.08	10	6	
0.1	8	2	
0.35	29	1	
0.44	22	1	
0.68	30	1	
0.83	6	5	
1.0	35(b)	1	
2.0	21	2	
2.59	4	3	
3.6	12	1	
4.2	2	1	
4.5	5	4	
5.2	7	1	
25	27	1	
27	33	4	
55	28	2	
80	17	1	
80	17(a)	1	Yes
150	15	1	
280	9	1	
300	20	4	
385	34(b)	1	
780	31	4	
2300	32	1	
8000	14	4	

If all circuits had been required to meet at least one of the envelope criteria in Table 6, 75% of the problem circuits would have been redesigned to be less sensitive. The same requirement would have resulted in a redesign of only 4.8% of those circuits which did not cause problems. So we caught most of the problem circuits and yet didn't interfere much with those which weren't problems. Table 7 uses a shorthand notation in identifying the excessively large. If two organizations that aren't too closely allied have an interface agreement, one person says, "I'll send you a 10-V signal, guaranteed 8 minimum." The other person says, "If he says 8 minimum and I design it to have ½-V sensitivity, his signal will probably never go below ½ V, so I will always actuate when he sends me a signal." We think they should use more conservative design in this respect.

We recommended that we impose an end-circuit design constraint on inter-subsystem circuitry – at least on the critical circuits – and minimize the over-design of this sensitivity. We also suggested that circuit threshold sensitivity should be a routine entry in some document, such as our circuit data sheets. Also, we would like to have sufficient detail in P/FRs in order to reference these problem circuits to drawings.

The circuit constraint which I mentioned is now being applied to the *Mariner* Mars 1969 project on certain circuits which we call critical circuits. We aren't going all out right now, but are awaiting with great interest the results of this constraint as evidenced by the spacecraft system testing which is about to start.

Discussion

R. T. Lucey: I am wondering if any of these tests were performed in a thermal vacuum environment and if you had experienced any type of different thresholds.

Albert C. Whittlesey: We tried to make a rather extensive test by getting data from 60 circuits. We did not go through any thermal variations on any of the circuits. We considered ourselves lucky to have one estimate of the sensitivity of a given circuit, let alone the variations that could come about with thermal or vacuum problems.

N69-25441

Spacecraft EMC Computer Model

Bernard D. Cooperstein
TRW Systems, Inc.
Redondo Beach, California

I. Introduction

This paper is an attempt to describe a technique for predicting electromagnetic incompatibilities between the various units in a spacecraft. The spacecraft used as the model is the *Orbiting Geophysical Observatory* (*OGO-F*). The scope of the analysis was limited to common impedance and cable-coupled interference, because usable radiation models could not be developed in the available time.

II. Plan

A. Data Base

The basis for the *OGO-F* EMC analysis is an interference susceptibility matrix (Fig. 1). Because each experiment is theoretically both an interference source and receiver, each appears on both axes. In addition, the spacecraft converters and inverters are listed on the interference axis.

When completed, each vertical column of the matrix will describe the susceptibility of a particular experiment in relation to the rest of the observatory elements listed on the interference axis, whereas each horizontal row will describe the interference effect of each unit listed on the interference axis. To describe accurately any coordinate on the matrix, it is necessary to have all of the information required to specify the complete susceptibility characteristics of the susceptible unit, the complete interference characteristics of the interfering unit, and the complete set of transfer functions that describe the energy transfer from the latter to the former. Since the exact information required was not available (nor would it be available without an extensive and costly test program) inexact mathematical models were made, based on whatever information could be obtained.

To facilitate the collection of the interference and susceptibility parameters of the various experiments, a questionnaire was sent to the *OGO-F* experimenters. Of those returned, only a few contained information about interference limiting devices. Because of an oversight, information on input circuit impedances was not requested. Information from the questionnaires and other sources was completed and arranged into three tables.

The first was a table of the estimated front-end susceptibility characteristics of each experiment. In the cases of multichannel experiments, each channel was listed separately. This resulted in sufficient information to allow analyses of 20 potentially susceptible experiments.

SUSCEPTIBILITY

INTERFERENCE	01	02	03	04	05	06	07	08	09	10	11	12	13	14	15	16	17	18	19	20	21	22	23	24	25	26	R& RR
01				3	4		X				X	4	4	X		X	X					2		X	4	X	
02	2			3		4	X				X	4	4	X		X	X					2		X		X	
03				2		4	X				X	3	3	X		X	X							X	4	X	
04	1		3		3	3	X		4		X	2	2	X		X	X					2		X	3	X	
05	1	4	2	1		2	X		4	4	X	2	2	X		X	X		4		4	1	4	X	2	X	
06	X	X	X	X	X	X	X	X	X	X	X	X	X	X	X	X	X	X	X	X	X	X	X	X	X	X	X
07	X	X	X	X	X	X	X	X	X	X	X	X	X	X	X	X	X	X	X	X	X	X	X	X	X	X	X
08	3						X				X			X		X	X					3		X		X	
09	1		4	2		4	X				X	3	3	X		X	X					2	4	X	3	X	
10	2		4	2	4	4	X				X		4	X		X	X					2		X	4	X	
11	X	X	X	X	X	X	X	X	X	X	X	X	X	X	X	X	X	X	X	X	X	X	X	X	X	X	X
12	1		3	2		3	X		4		X		2	X		X	X		4			3		X	2	X	
13				3			X				X			X		X	X					3		X		X	
14	X	X	X	X	X	X	X	X	X	X	X	X	X	X	X	X	X	X	X	X	X	X	X	X	X	X	X
15	1		4	2		4	X				X	3	3	X		X	X		4			2		X	4	X	
16							X				X			X		X	X							X		X	
17						4	X				X			X		X	X							X		X	
18							X				X			X		X	X							X		X	
19	4						X				X			X		X	X							X		X	
20	2			4			X				X	3	3	X		X	X		4			3		X	3	X	
21							X				X			X		X	X							X		X	
22	2			4			X				X			X		X	X							X		X	
23	2						X				X			X		X	X					4		X		X	
24	X	X	X	X	X	X	X	X	X	X	X	X	X	X	X	X	X	X	X	X	X	X	X	X	X	X	X
25							X				X			X		X	X							X		X	
26	X	X	X	X	X	X	X	X	X	X	X	X	X	X	X	X	X	X	X	X	X	X	X	X	X	X	X
R&RR							X				X			X		X	X							X		X	
SPACECRAFT CONVERTER	4						X				X			X	3	X	X		3		4			X		X	
SPACECRAFT INVERTER	1			3			X				X	4	4	X		X	X					2		X	4	X	

Fig. 1. Interference-susceptibility matrix

The columns corresponding to those experiments not considered are crossed out. The susceptibility characteristics of all but two experiments were described as either band-pass, low-pass, or high-pass. The band-pass characteristic was described by the following:

$$G_{BP} = \left[1 + \left(\frac{\dfrac{f}{f_c} - \dfrac{f_c}{f}}{\dfrac{a^2 - 1}{a}} \right)^2 \right]^{-1/2} \tag{1}$$

where f_c = center frequency

$a = \dfrac{f}{f_c}$ at the -3-dB frequency

The low-pass characteristic was described by:

$$G_{LP} = \left[1 + \left(\frac{f}{f_{-3\,\mathrm{dB}}} \right)^2 \right]^{-1/2} \tag{2}$$

The high-pass characteristic was described by:

$$G_{HP} = \left[1 + \left(\frac{f_{-3\,\mathrm{dB}}}{f} \right)^2 \right]^{-1/2} \tag{3}$$

The two experiments not described by the above were F-03 and F-22. Experiment F-03 was described by a low-pass filter having the following properties:

$$G = 1 \qquad \leq 100\ \mathrm{Hz}$$

$$G = 0 \qquad > 100\ \mathrm{Hz}$$

Experiment F-22 was described by the following:

$$G = G_1 G_2$$

where:

$$G_1 = \left[1 + \left(\frac{f}{f_{1.1\,\mathrm{kHz}}} \right)^6 \right]^{-1/2} \tag{4}$$

$$G_2 = \left[1 + \left(\frac{f_{1\,\mathrm{Hz}}}{f} \right)^4 \right]^{-1/2} \tag{5}$$

The susceptibility thresholds of the experiments were stated in terms of their front-end sensitivities indicated in the questionnaires.

The second table was a compilation of the pulse characteristics of each pulse described in the questionnaires. The pulses are described by their amplitude, width, rise time, decay time, and repetition frequency. Each pulse was given an identifying number. In the cases of those pulses having variable repetition frequencies, the range of the pulse repetition frequency (PRF) was noted. The spectral distribution of energy from each pulse train was computed to the 100th harmonic by:

$$V = 2\,AdR\, \frac{\sin \pi f d}{\pi f d} \cdot \frac{\sin \pi f t}{\pi f t} \tag{6}$$

where:

A = amplitude

d = pulse width

f = frequency

R = pulse repetition frequency

t = rise time (or decay time if less than rise time).

For pulses having variable PRFs, R was usually set at the center of the band of the susceptible experiment.

The third table was a compilation of the amplitudes and frequencies of sine wave signals generated in the experiment. The information available for the pulsed and sine wave signals was sufficient to describe, partly at least, the interference generation characteristics of all but six experiments. The rows corresponding to these six experiments are crossed out in Fig. 1.

The interference generation characteristics of the spacecraft were modeled from available test data taken from EMI tests performed on the attitude control system (ACS) inverter and on two spacecraft converters. While these data may not accurately describe the interference generation picture of the entire spacecraft, they represented the best available input at the time.

B. Power Bus Coupling

The major part of the analysis was directed toward common impedance coupling via the power distribution subsystem. It was assumed that the noise voltage impressed on the power bus by any experiment would exist at the power input terminals of every other experiment. This is a worst-case assumption, since it assumes that the line loss is zero. A similar assumption was made with regard to the noise voltage impressed on the power bus by the spacecraft converters. It was also assumed that the measured impedance of the *OGO-E* spacecraft simulator was representative of the impedance characteristics of the *OGO-F* power distribution subsystem. Using this impedance, the noise currents measured on the power lines of the spacecraft converters and ACS inverter can be expressed as equivalent voltages. Figure 2 is a functional drawing of the power bus coupling relationships.

It is necessary to define a transfer function that describes the voltage relationship between the signal spectrum generated inside an experiment and the resulting signal spectrum which appears on the power bus. As no data relating to such a transfer function was available, a universal experiment transfer function was defined and identified as TF-1. The rationale behind TF-1 is as follows:

(1) Line regulators provide 40 dB of isolation to 1 kHz.

(2) A single element filter provides 6 dB per octave isolation from 1 kHz to 1 MHz.

A plot of TF-1 is shown in Fig. 3. The computed value V for each experiment signal is then multiplied by TF-1 to give its power bus spectrum. In the case of the spacecraft converters, the noise voltages used were those actually measured on the power line, so no transfer function was necessary. In the case of noise currents, the values used were those actually measured on the power line. The power subsystem impedance Z is a measured transfer function and is identified as TF-2. A plot of TF-2 is shown in Fig. 4. The computed values for the converter and inverter current spectra are then multiplied by TF-2 to give V_4 and V_3, respectively.

The total noise voltage on the bus (V_5) is the sum of V_1, V_2, V_3, and V_4. This voltage spectrum is then bandwidth limited by the appropriate characteristic of the particular susceptible experiment and summed to give the equivalent voltage at the center of the band. In the general case, it is then assumed that the noise voltage impressed at the front end of the electronics package of an experiment is 80 dB less than the noise voltage at the power input terminals. This is an arbitrary selection that could be modified from experiment to experiment if better information were available. In the computer program, the sequence of calculations was somewhat different than that described above due to computer storage limitations, but the final results should be the same. The actual sequence used in the computer is shown in Fig. 5.

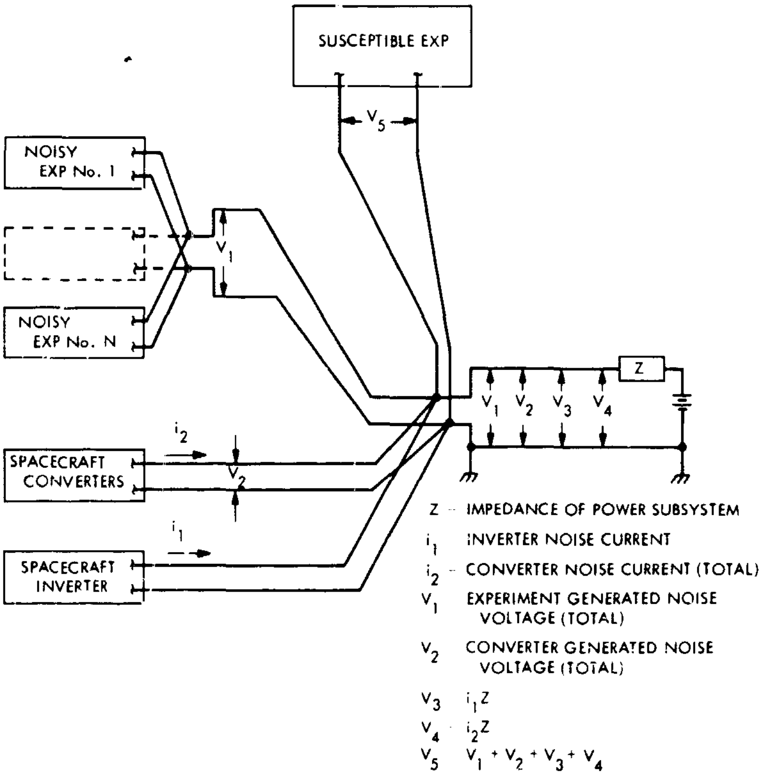

Fig. 2. Power bus coupling

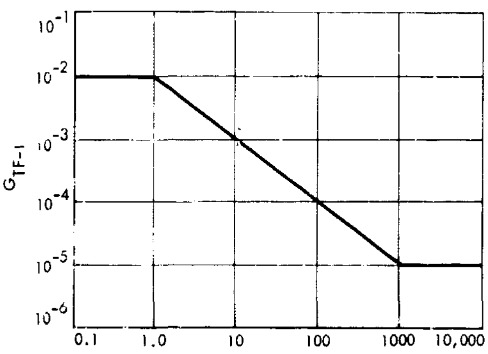

Fig. 3. TF-1 log-log plot

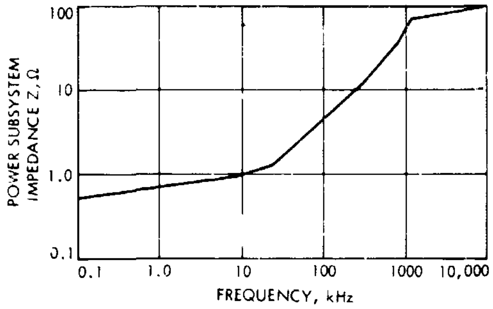

Fig. 4. TF-2 log-log plot

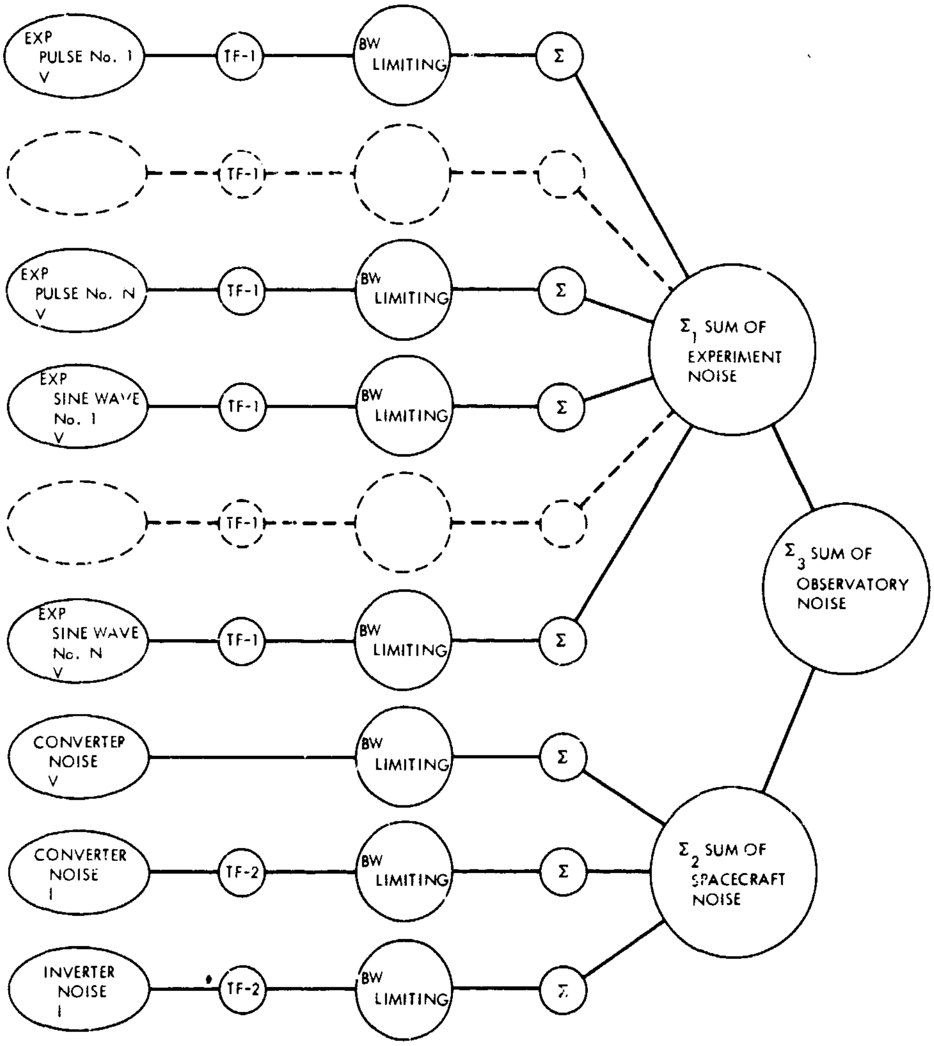

Fig. 5. Computer sequence for power bus coupling

1. Determination of probable incompatibilities. The front-end sensitivity (T_i) of a particular experiment is given by the experimenter in the questionnaire. The 80-dB isolation factor gives a resultant power bus susceptibility threshold T_{PB}, where

$$T_{PB} = T_i \cdot 10^4$$

If the noise voltage summation Σ of any experiment, inverter, or converter exceeds T_{PB} by a factor of 100 or more, the unit is identified as a major offender. If Σ exceeds T_{PB} by a factor of at least 10, but less than 100, the unit is identified as a secondary offender. If Σ exceeds T_{PB} by a factor of at least 2, but less than 10, the unit is identified as a minor offender. If Σ varies between 0.5 and 2 T_{PB}, the unit is identified as a possible offender. Table 1 is a summary of the above. In those cases where T_i was given as a current rather than a voltage, subjective values of input circuit impedance were assigned to the experiment and the resulting T_i in terms of voltage was used as the basis of the evaluation.

Table 1. Probability assignment of interfering units

Range of Σ	Designation of probability	Identification No. on matrix
$\Sigma \geq 100\ T_{PB}$	Major	1
$100\ T_{PB} > \Sigma \geq 10\ T_{PB}$	Secondary	2
$10\ T_{PB} > \Sigma \geq 2\ T_{PB}$	Minor	3
$2\ T_{PB} > \Sigma \geq 0.5\ T_{PB}$	Possible	4

2. Coupling via digital and/or analog output wires. It was assumed that there is 60 dB of isolation to coupled noise between the digital or analog output lines of an experiment, and its front-end. Figure 6 is a functional drawing of this coupling. The noise current i_3 is that measured on the output of a typical spacecraft converter. This current sets up a magnetic field which induces a voltage (V_i) into the experiment output line. It was assumed that the current-carrying wire was not shielded and that the experiment output wire was No. 28 coaxial cable. The transfer function which describes this coupling was identified as TF-3 and was based on empirical data. The transfer function (TF-3) is given as a coupling impedance and is expressed in ohms. A plot of TF-3 is shown in Fig. 7. The current noise spectra are multiplied by TF-3 to give the induced voltage spectra which are then bandwidth limited and summed as in the case of power bus coupling. A flow diagram is shown (Fig. 8). After the isolation factor (60 dB) is applied, the result is compared with the criteria shown in Table 1.

3. Signal line coupling. Five of the *OGO-F* experiments considered in the EMC analysis use an electronics package, which is separate from the sensor. In these cases, a relatively low-level signal is conducted from the sensor to the front end of the electronics package via coaxial cable. Therefore, the only isolation from cable-coupled interference is that provided by the signal line shields. The signal levels given in the questionnaires were used as the threshold levels for susceptibility.

An on-line computer program developed for analysis of capacitive and inductive coupling problems was used for the signal line coupling analysis. All of the parameters used are estimates based on available information. The source noise voltages and currents are the sums of those experiment sigmas found in the power bus coupling analysis. The rationale was that the noise was coupled from the unshielded power lines to the shielded signal lines. In all cases, bandwidth limiting was accounted for in the input noise voltage or current. To obtain the input currents, the voltage was merely divided by the value of TF-2 at the frequency of interest. The results of this analysis do not appear on the matrix, but are detailed in Table 2.

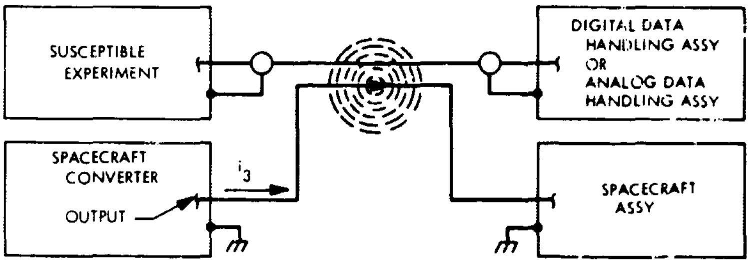

Fig. 6. Coupling between S/C converter and experiment output lines

Table 2. Results of signal line coupling analysis

Experiment	Coupling type and location	Noise source	Computed values[a]
F-02	Capacitive over entire run	OPEP[b] experiments	136 μV
	Inductive at harness No. 6 interface	OPEP[b] experiments	21.1 mV[d] @ 1 kHz
	Inductive in harness No. 6	All experiments	19.7 mV[d] @ 1 kHz
F-21	Capacitive in harness No. 6	All experiments	0.122 μV @ 75 kHz 0.426 μV @ 150 kHz 1.3 μV @ 300 kHz
	Inductive in harness No. 6	All experiments	6.75 mV[d] @ 75 kHz 3.65 mV[d] @ 150 kHz 1.95 mV[d] @ 300 kHz
F-22	Capacitive in harness No. 6	All experiments	<50 pV @ all frequencies
	Inductive in harness No. 6	All experiments	18 μV[d] @ 1 Hz 180 μV[d] @ 10 Hz 1.8 mV[d] @ 100 Hz 18 mV[d] @ 1000 Hz
F-23	Capacitive at harness No. 6 interface	SOEP[c] experiments	$<10^{-14}$ V @ all bands
	Capacitive in harness No. 6	All experiments	$<10^{-9}$ V @ all bands
	Inductive at harness No. 6 interface	SOEP[c] experiments	3.9 μV @ 10 Hz 28.4 μV @ 40 Hz 97.5 μV @ 160 Hz 165 μV @ 640 Hz 4.25 mV[d] @ 2560 Hz
	Inductive in harness No. 6	All experiments	3.88 μV @ 10 Hz 24.9 μV @ 40 Hz 176 μV @ 160 Hz 616 μV[d] @ 640 Hz 13.6 mV[d] @ 2560 Hz
F-25	Capacitive at harness No. 6 interface	SOEP[c] experiments	<2 pV @ all bands
	Capacitive in harness No. 6	All experiments	<1 μV @ all bands
	Inductive at harness No. 6 interface	SOEP[c] experiments	45 mV[d] @ band No. 1 840 μV[d] @ band No. 2 16 μV @ band No. 3 <0.1 μV @ band No. 4
	Inductive in harness No. 6	All experiments	500 mV[d] @ band No. 5 41.2 mV[d] @ band No. 6 980 μV[d] @ band No. 7 84.5 μV[d] @ band No. 8

[a] Computed values include transient effects in the same manner as in the matrix of Fig. 1.

[b] OPEP – orbital plane experiment package.

[c] SOEP – solar experiment package.

[d] Computed interference exceeds the front-end sensitivity of the electronics package.

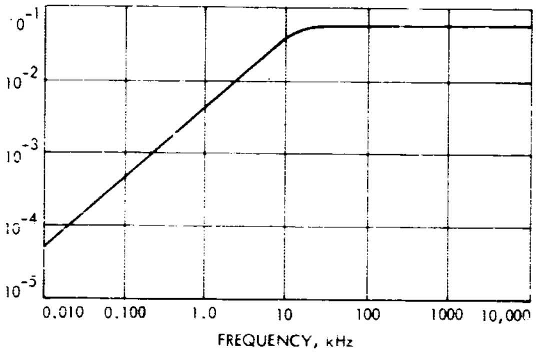

Fig. 7. TF-3 log-log plot

4. On-line computer program. Using TRW's Bunker Ramo 340 on-line computer, a program was developed to perform the matrix analysis on a column-by-column basis. This program contains 94 subroutines of which 48 are pulse data inputs. The average time to run one column or channel of the matrix is 1 hour. Because of storage limitations of the computer, each pulse was analyzed to its 100th harmonic only. For the majority of pulse trains, this is adequate. However, for pulse trains having very low pulse repetition frequencies, some energy is lost in the analysis. These pulses would be better analyzed as nonrepetitive transients. This was done in the computer by a different program. Those of the slower pulses were analyzed by this method and the results of these analyses are given in Table 3.

After the file is loaded into the console, the susceptibility bandwidth of the particular experiment is entered. The appropriate subroutine is initiated, depending upon whether the experiment has a low-pass, high-pass, or band-pass characteristic. Experiment F-01 will be used as a typical example. This experiment has a band-pass characteristic, so the appropriate subroutine is initiated. The center frequency and the band-pass characteristic ("*a*" of Eq. 1) are entered. Figure 9 shows the computer's cathode ray tube (CRT) display after this subroutine is completed. The center frequency is 200 Hz and the band-pass characteristic is 1.18. The next step is to enter the parameters of the first pulse to be used. A sequence of four subroutines make up the experiment pulse routine.

Table 3. Transient analyses results[a]

Experiment	Pulse No. 9	Pulse No. 12	Pulse No. 13
F-01	2.47 V[b]	3 mV[b]	2 mV[b]
F-02	17.3 V[b]	1 V	4 V[b]
F-03	1.14 V[b]	1 V[b]	4 V[b]
F-05	1.39 V[b]	—	—
F-06	3.42 V[b]	1 V[b]	4 V[b]
F-08	27.3 V[b]	1 V	4 V
F-09	27.3 V[b]	1 V	4 V[b]
F-10	55.3 mV	1 V	4 V[b]
F-12	28 V[b]	1 V[b]	4 V[b]
F-13	27.9 V[b]	1 V[b]	4 V[b]
F-18	27.3 V[b]	1 V	4 V
F-20	0.257 V	—	—
F-21	26 mV	—	—
F-22	7.9 V[b]	81 mV[b]	0.33 V[b]
F-23-1	0.104 V	8 mV	19 mV
F-23-2	0.323 V	10 mV	6 mV
F-23-3	1.42 V	2 mV	2 mV
F-23-4	4.19 V[b]	900 μV	800 μV
F-23-5	8.9 V[b]	60 μV	180 μV
F-25-1	28 V[b]	1 V[b]	4 V[b]
F-25-2	0.502 V[b]	—	—
F-25-3	48.9 mV	—	—
F-25-4	23.8 mV	—	—

[a] The voltages given are those calculated to exist at the power input to the experiment, at the center of the experiment's front-end bandwidth, for the duration of each individual pulse.

[b] Indicates that the calculated voltage is equal to or greater than the calculated power bus threshold level (T_{PB}) of the experiment.

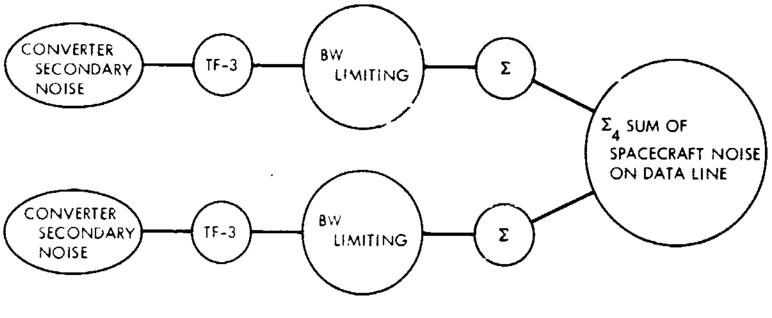

Fig. 8. Computer sequence for data output line coupling

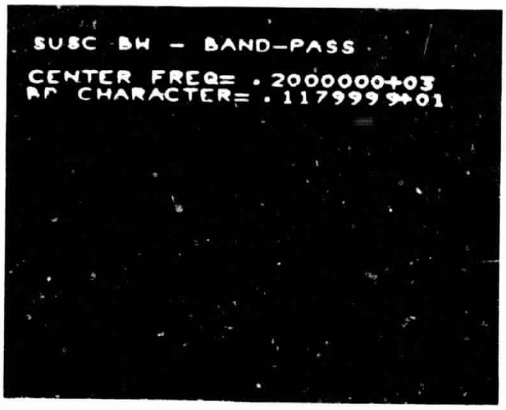

```
SUSC BH - BAND-PASS
CENTER FREQ= .2000000+03
BP CHARACTER= .1179999+01
```

Fig. 9. CRT display after appropriate subroutine is completed

The first of these subroutines generates a frequency vector which has elements corresponding to the harmonics of the PRF. The second subroutine calculates the value and displays (Fig. 10) the envelope of the peak values of the first 101 harmonics. The third subroutine transfers the spectrum information to another storage bank. The fourth subroutine computes the values of TF-1 at each harmonic frequency, multiplies each of these values by the value of the corresponding harmonic amplitude, stores the resulting spectrum (which represents the noise on the bus due to that pulse), and displays (Fig. 11) its envelope. The vertical scale of this display is not necessarily the same as for Fig. 10. The next step is to evaluate this spectrum over the bandwidth of the susceptible experiment. This subroutine computes the function described by Eq. (1), multiplies this by the bus noise spectrum, stores the resulting spectrum and displays it on the CRT. It then computes and displays the maximum value of the spectrum, and then algebraically sums the amplitudes of all the harmonics and displays this value, which is then stored in an address selected by the operator. Figure 12 shows the final display, the vertical scale of which is not the same as for Fig. 11. This sequence is repeated for each pulse, except that different pulse data is loaded each time. When more than one pulse is generated by any experiment, the sum of the total voltage of each pulse is computed and stored in a previously determined location. For pulses having variable PRFs, the pulse data is loaded by a different subroutine. The PRF is selected to be at the center of the passband, or as close to this as possible. Figure 13 shows a typical display of this type

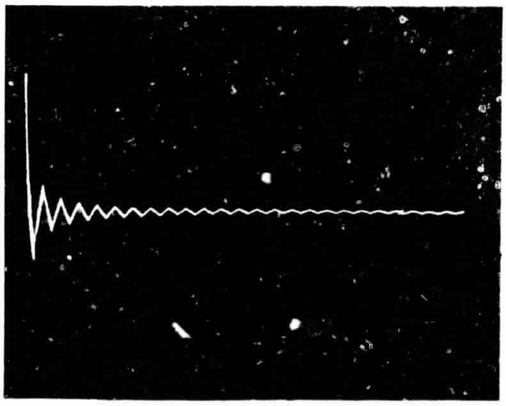

Fig. 10. Envelope of the peak values of the first 101 harmonics

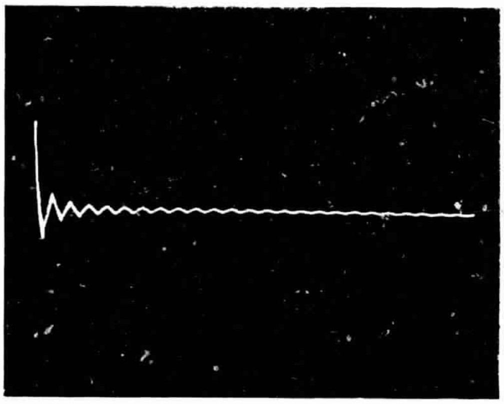

Fig. 11. Envelope of resulting spectrum

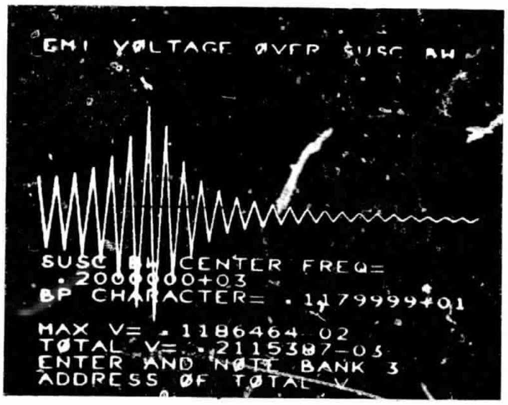

```
EMI VØLTAGE ØVER SUSC BH
SUSC BH CENTER FREQ=
 .2000000+03
BP CHARACTER= .1179999+01
MAX V= .1186464 02
TØTAL V= .2115387-05
ENTER AND NØTE BANK 3
ADDRESS ØF TØTAL V
```

Fig. 12. Final display of resulting spectrum

```
PULSE AMPL = .1000000+02
PULSE WIDTH = .3000000-05
RISE TIME = .4999999-07
DECAY TIME = .4999999-06
PRF = .2000000+03
DATA LØAD CØMPLETE
```

Fig. 13. Typical display of pulse data load

of data load. The analysis routines are then used as before. After all of the pulses have been entered, sine wave signals and converter and inverter noise spectra are entered in a similar manner using other subroutines. The sequence follows that shown in Fig. 5.

III. Results of EMC Analysis

The results of the EMC analysis are summarized in Fig. 1 and Table 3. These results indicate whether a given experiment will detect noise generated by another experiment, and which experiments are most likely to cause interference to others. These results are subject to the constraints imposed by the assumptions mentioned in the previous section. It must be recognized that the desired signals are likely to be of much higher amplitude than the threshold sensitivity of the electronics package, in which case, only the strongest interference signals would result in measurable incompatibilities. The lower level interference signal effects are likely to be masked by the higher level signals.

A. Power Bus Coupling

This part of the analysis indicates that the most susceptible experiments are F-01, F-04, and F-22, and that the noisiest experiments are F-04, F-05, and F-12. However, the interference generated by F-05 is mainly of a transient nature (periods are 17.85 and 4.55 s) and may not result in a continuous loss of data to the susceptible experiments. On the other hand, for the short duration of a transient, enough energy may be coupled to cause a mode change. Part of the interference associated with experiments F-03, F-05, and F-13 can be considered as transient interference because the periods are relatively long. Part of the interference associated with experiments F-04, F-09, and F-15 can be considered as pseudotransients, since their periods are about one second. The remainder of the interference must be considered to be continuous, having the effect of raising the general noise level of the bus.

B. Empirical Verification

Information taken from test summary reports of four experiments were compared with the results of the computer analysis. The test data was compared with the computer analysis by evaluating the pulse train spectra for a low-pass filter having its 3-dB frequency at 1 MHz. These comparisons indicated that TF-1 was overestimated by 26 dB for one and 4 dB for another; and underestimated by 13.6 dB for the third and 15 dB for the fourth. The results of the computer runs were adjusted by these factors for the pulses in question.

C. Transient Analysis

A separate transient analysis performed on one of the pulses indicated that due to its very long duration, most of its energy is concentrated at frequencies below 1 Hz. Even though it may be detected by some sensitive experiments, its period is so long (40 s) that it will at worst cause a small loss of data, and its relatively low amplitude on the bus (approximately 220 mV) is unlikely to cause mode changes. The results of transient analyses performed on three other pulses are shown in Table 3. The remainder of the transients and pseudotransients were not analyzed separately as transients, but are included in the matrix.

In some instances the results shown in Table 3 do not agree with the matrix of Fig. 1. For example, the matrix shows that F-04 does not interfere with F-02, whereas Table 3 shows that Pulse No. 9 of F-04 is above the power bus threshold of F-02. The reason for this discrepancy is as follows. Because of core storage limitations of the computer, the pulse train program used for the matrix evaluates the pulse train's voltage function to only 101 times the PRF, which is 116.15 Hz for Pulse No. 9. The energy above this frequency is disregarded, when in fact, the envelope of the spectrum of this pulse train is almost flat to about 2.2 kHz. This means that, if the bandwidth of the receiving device could be described by $G = 1$ from 0 to 2.2 kHz and $G = 0$ from 2.21 kHz to ∞, the received voltages would be (2200/116.15) (computed voltage from 0 to 116.15 Hz). This is equal to (18.9)(0.936[1]), or 17.6 V. Because the bandwidth of F-02 is described by a low-pass filter function having a 3-dB frequency of 1200 Hz, one would expect the value of the received voltage to be somewhat less. Table 3 shows the computed value of the spectral density of Pulse No. 9 to be 17.3 V over the bandwidth of F-02, which compares well with the above estimate of 17.6 V. The results shown in Table 3 are therefore useful in estimating the short duration interference effect of the three pulses analyzed.

D. Coupling Via Digital and/or Analog Output Wires

Based on the assumptions, the computer analysis indicates that there will be no incompatibilities due to this mode of interference coupling.

---

[1] This is the computed value of Pulse No. 9 for the sum of its first 101 harmonics.

E. Signal Line Coupling

The results of signal line coupling analysis, shown in Table 2, indicate that no incompatibilities are likely due to capacitive coupling, but that inductive coupling is likely to result in varying degrees of interference problems for the five experiments analyzed. The results shown are for a severe case, because no cancellation effects are considered, and transient and pseudotransient effects are averaged as for matrix of Fig. 1. Regardless, the results indicate that additional shielding is not likely to significantly reduce the number of possible incompatibilities, although it would reduce the inductive coupling by a factor of 5 at frequencies about 100 kHz.

Discussion

G. L. Miller: I have a question regarding what you used for the inputs in this program. Did you measure what the noise output of a given unit was, and then use that as the input? If that is the case, how do you handle the question of the relative phasing of the noise outputs from *n* units operating at the same time?

Bernard D. Cooperstein: We sent questionnaires to all of the experimenters asking them for all of their signal generation parameters, bandwidths, sensitivities, and any other information that would be applicable to use in an analysis like this. The results of the questionnaires were compiled into tables and used as the basis of the models. Where no data was available, as in the case of those which were crossed out, the experimenters did not respond. Of course there was no information. There was virtually no information available on certain isolation and transfer functions, and the universal transfer function TF-1 was assigned to the experiments to describe that coupling. In the very few cases where some empirical data became available after the fact, it was incorporated. However, the analysis is based on whatever data was available. Then the assumptions are clearly stated and can be modified if more information becomes available. Basically, this paper is to present an approach to the problem or a technique for solving compatibility problems in a complicated spacecraft. What comes out of it is as good as what goes in.

G. L. Miller: Could this be extended to include the question of ground noise? As I understand it, this is exclusively on the power lines or input lines, but does not consider the question of whether people are bouncing the grounds around, which is what I think is really the predominant problem.

Bernard D. Cooperstein: We could get into a whole discussion about grounds, but the effect of ground noise will have an effect on some inputs. A transfer function can therefore be described as to where that input is. If it be on a power return for example, and we now have some information about ground noise that can be related to a voltage or current on that wire, it can then be related to the sensitivity of the unit through the transfer function which describes the coupling between that input of the wire and the front end of the unit.

Robert W. Ellison: I think I understood that you used the universal transfer function not only for the amount of energy from some source inside a box coming out on the bus, but also for all wires independent of their configuration or whether they were bundled. Is that correct?

Bernard D. Cooperstein: True.

Robert W. Ellison: Well, I am very much in sympathy with the lack of data information to do a more realistic job. I was also curious about the question of your using voltages, currents, and impedances. You probably are already aware that the government does have a very large modeling program which has been going on for a number of years at about the $20,000,000 a year level.

Bernard D. Cooperstein: Are you talking about the Electromagnetic Compatibility Analysis Center (ECAC)?

Robert W. Ellison: I am really talking about the Secretary of the Air Force Panel, which reviews the modeling efforts of the government every year and has done so for I guess the last six years. They have come to the conclusion that it is not reasonable, at least with their modeling efforts, to work with voltages and currents, but only the available power. They found this out the hard way by attempting to model a war situation which turned out to be so grossly in error, that they went back to see why the model had so grossly misrepresented the true conditions. It turned out that they were taking whatever available data they had on the amount of emissions from packages, and it was not necessarily the amount that package could produce, but happened to be the amount that it produced at the time that the test was conducted. Particularly in the Viet Nam war situation, they took data on a statistical number of transmitters, which involved over 10,000 different units of a particular kind, and they came out about 40 dB below the interference level that they actually experienced there. The real point that they wanted to make, and that I want to make, is that, unless you can determine the available power which comes out of a package under worst case conditions, your analysis may be grossly in error and even indicate safe when in fact it is interfering.

Bernard D. Cooperstein: First of all, I would like to say that we have had experience at TRW modeling with voltages and currents which are not grossly in error. You can very accurately, analytically model the capacitive and inductive coupling between wires and verify them by laboratory tests. So I have to take exception to that. As far as available power, this is not really a consideration. In the case of a spacecraft, we are not talking about high power transmitters that are going to interfere with other receivers. We are generally talking about the unit in a very select environment. There is essentially no outside interference to be concerned with. All the interference, the entire electromagnetic environment, is that contained by the spacecraft, exclusive of course of physical phenomena which the experimenters are trying to measure and which cannot be considered as interference. The modeling is gross in the sense that all we know about the coupling between two wires is the length of the harness and about how thick a harness is. But whether the two wires are 1 cm apart, 0.5 cm apart, 2 cm above the ground plane, or 0.25 cm above the ground plane is something that cannot be known and cannot be modeled, because it will vary as the harness leads along the structure. The wires in the harness will change relative to each other, so you have to take a statistical average of where the wires will be between any two points. The trouble with taking worst case everything is that you come out with requirements which say that you must put 18 lb of shielding on every wire and 100 lb of filtering. Then you need a *Saturn* to lift *OGO*. The purpose of the analysis is to minimize the amount of overdesign.

Discussion (contd)

Robert W. Ellison: You are apparently having the same problems we are having. We come up with the same conclusion that if you worst case everything you end up with unrealistic results.

Bernard D. Cooperstein: The purpose of an analysis like this is not to pick out all the problems, but to eliminate the gross problems and to show where they might occur. That is why this table, which showed 40 dB, 20 dB and such, may be a little arbitrary, but at least it will give somebody perhaps a little more confidence about how upset they should become about a possible interference problem. The model may not take care of all the problems, but if it says that I have a 40-dB problem, perhaps at least I ought to go back and look at it.

Robert W. Ellison: We are using it in a little different way. We are using it in fact not to identify where there is a problem, but to indicate which circuits need further analysis at a more exacting level. I presume this is about what you are doing too – you do not conclude that you have a problem, because the analysis with these gross assumptions shows it. You actually go and look at the circuit in greater detail and even make wire-to-wire measurements.

Kim R. Schuette: I would like to make an observation that might tend to interrelate a few of the things that have been discussed just now and earlier. I think one of the big advantages of *OGO*, a rather maligned spacecraft today, perhaps because of the number of experiments and sensitivities of these experiments, is not so much what it might do to the next *OGO*, but rather what it might do to the next program. I am referring to the talk which Tom Walter gave yesterday regarding a management plan for design. The plan and the paper that he gave are something that in fact have worked and are working. The reason for mentioning this is: I do not believe that if the response from the *OGO* experimenters after the first few *OGOs* had not been what it was, we would be in a position to make that statement. I think that this is a rather significant point in itself, that *OGO* has helped subsequent spacecraft. It would be different if we were starting over.

We started *OGO* about 1959. We all know a lot more now. We know a lot more about both the technical approach, the organization, and administrative approach; what requirements are reasonable and what requirements are not. There are gray areas in all of this. I do not contend, however, that interference, modeling, or prediction are nearly the black art that many people still claim them to be. I think that it might be a little gray, but certainly not black. I think that its grayness perhaps occurs in some of the particular experiments that we are faced with right now. The sensitivities that were related a little earlier are rather astounding and naturally they occurred about the point in the spectrum where the interference is easiest to come by. I am not trying at all to defend *OGO*, because I think that the comments that were made this morning were extremely objective. In fact, I think that had I been making the presentation, it probably would have been a bit worse. I would say, however, in this regard that I feel that Mr. Cooperstein and Mr. Johnson have done an excellent job in attempting to unscramble an egg (which is not the case in the newer programs), which I think largely has been brought about because of *OGO*.

N69-25442

Transient Compatibility Measurements in Spacecraft

Philip R. Rogers
General Electric Company
Philadelphia, Pennsylvania

I. Introduction

At present, electromagnetic compatibility is usually accomplished by designing equipment to meet certain EMC specifications. The verification of the designs is made by standard tests for emission and susceptibility, both conducted and radiated. The measurements are limited to the frequency domain. With the exception of power line susceptibility tests with 10-μs transients, the entire test requirements are in the frequency domain. The evolution of the specifications for EMC was paralleled with the evolution of measurement equipment. By necessity, the two grew together, and as better measuring equipment became available, it was used for test. The capability of measuring broadband and narrowband frequency domain voltages has existed for many years. This type of equipment is used for measuring transient interference, or the broadband effects of the transient.

A. Emission Sources

Let us look briefly at the electromagnetic parameters that must be controlled and measured. The basic types of emissions are narrowband or broadband. Narrowband emissions are produced by oscillating devices that are intended to produce signals, but also produce spurious outputs. These emissions are sine or distorted sine waves. In any given system, the fundamental and most spurious frequencies are known. The measurement of narrowband emissions can be easily made and their contribution to the electromagnetic environment defined at the component level. Broadband emissions are produced by some form of switching device; i.e., any device that accomplishes a change of voltage or current in a short period of time. The origin of broadband noise is a $\frac{dV}{dt}$ or $\frac{dI}{dt}$ function. Typical sources of this type of emission are switches (mechanical or solid state) used for turn-on or -off functions, choppers, dc motors, gas discharge devices, and static discharges. The measurement of these switching transients is made in the frequency domain. This is due to the availability of measuring equipment and the fact that it is required by specifications.

The present specification requirements and levels evolved from broadband noise degrading communications equipment and are still oriented at controlling this parameter. Despite recent improvements, EMC specifications do not control a major spacecraft incompatibility; namely, transient interference. It is not meant to imply that present EMC specifications are not applicable to spacecraft. There are many electromagnetic parameters that are defined by them, and component screening can be done by proper application of typical EMC specifications.

B. Low-Level Digital Circuit Susceptibility

A major problem in spacecraft is susceptibility in low-level digital circuits. To control weight and power consumption, integrated circuits, microminiature components, etc., are used. Digital logic is used to perform such functions as operation of command systems, control of spacecraft navigation, and attitude control systems, and generation of timing functions. These devices are becoming smaller and are being packaged in smaller cases than before. An undesired result is greater susceptibility to transients of short duration.

The operation of a logic module depends on a voltage level that causes a change of state – from on to off. The devices can react in a very short time with a few nanoseconds being typical. The device can operate on positive or negative voltage transients, depending on whether the plus side or the return is changed. Unfortunately, the devices often use very short pulses at low levels to perform their function.

The source of interfering transients is usually the operation of relays, tuning components on or off and other higher current level changes, mostly on main power buses. Coupling from the source to the logic modules can take many different paths. Since complete control of all transients is costly in terms of weight and reliability, this approach becomes prohibitive.

II. Transient Compatibility Test

Compatibility of a system is the end result (or goal) of an electromagnetic control program. The standard specification control on components and system compatibility tests to define margins does not offer a practical approach to transient compatibility. To pursue this point, system susceptibility is due to component malfunction. In any test for susceptibility to interference (intentional or otherwise) of a system, it is a component that malfunctions or is degraded. The interference that causes that malfunction is generated in the system and transmitted to the component. To test for transient compatibility, the tests should therefore define the parameters as they exist; namely, susceptibility at the component level and emission tests at the system level. This approach is accomplished in three stages.

A. Component Screening

As these tests are not limited to power line measurements, each component must be analyzed to determine potentially vulnerable circuits. Since this is a normal procedure at the design stage, it merely becomes a part of the design surveillance activity. However, for transient susceptibility, each line must be checked, and particularly, digital logic lines. The result of this screening process is a list of all the component lines that are potentially vulnerable to transients. Some will have levels and pulse widths already defined as a part of the functional design. A sample tabulation sheet (Fig. 1) was intended to be filled in by the component design engineer with help from the system EMC engineer. It is also an excellent checklist for estimating the emission from the component both for broadband and narrowband interference. To generate this list, several questions are asked. Are there SCRs, flip-flop circuits, low-level nand and nor gates, level detectors, etc.? What are the types and levels of voltage and current used? What is the frequency of operation in the mission?

The answers to these questions reveal that the given line or function is critical to the mission, is sensitive to interference, and to what types and levels of interference it is sensitive. Now, all the lines in a component are defined for interference characteristics. (This information at this point is valuable for any system review of EMC. It could also be expanded to include impedance to ground.) Note that the most authoritative person made the largest contribution; namely, the component designer. By requiring the subsystem engineer to review the tabulation, another well-informed contributor is added to this screening process.

B. Transient Injection

The next step in the process is to determine from the component information which lines present a potential compatibility problem due to transients. This is done by the EMC engineer. The tests to be performed are injection of transients. Although many transients are possible with various amplitudes and shapes, the purpose is to determine what levels are needed to cause malfunction. Since the devices are sensitive to voltage levels, this is the main parameter to be determined. The speed of reaction is much less important. The device that can react in one ns can also react in one μs. A transient that occurs faster than the device can react will not yield any information. So, if a longer than necessary transient is applied, it will cause a reaction if the amplitude is sufficient. To test at all pulse widths and amplitudes becomes a long test. As a compromise, the transient called out in MIL-STD-826 and other EMI specifications is used. The 1-μs rise time is typical of transients expected and is

COMPONENT EMC INTERFERENCE/SUSCEPTIBILITY TABULATION

SUBSYSTEM ______________ COMPONENT ENGINEER ______________ EMC ENGINEER ______________

COMPONENT ______________ SUBSYSTEM ENGINEER ______________

CONNECTOR		SUSCEPTIBILITY	EMISSION	TRANSIENT SHAPE						FREQUENCY OF OCCURRENCE			MAGNITUDE		DETERMINATION
PIN	FUNCTION			RECTANGULAR ±	TRIANGULAR ±	SINE	OTHER	RISE TIME	FALL TIME	RANDOM	PERIODIC PPS	CW (FREQUENCY)	VOLTAGE ±	CURRENT ±	C - CALCULATED M - MEASURED

Fig. 1. Sample tabulation sheet

slower than most. The rise time is therefore no faster than the logic switching devices which will be operated if the transient amplitude is high enough.

With the lines to be tested selected and the transient shape defined, the test on the component is to determine the transient amplitude needed to cause malfunction. The level starts low and increases to the susceptibility threshold or some prescribed maximum. Maximum levels can be determined by damage to parts or some level based on system parameters. (The level of twice the normal voltage on the line being tested is recommended.) The results of these tests will be transient susceptibility thresholds for all the potentially vulnerable components in the system.

C. Transient Interference

The next step to complete the compatibility definition is to measure the transient interference that exists in the system. The amplitudes of transients are measured at the same points that the component susceptibility was measured. The measurement must be made with the entire system functioning. The location of components and harnesses must be in prime configuration, and the hardware must be prime. The only perturbation to the prime configuration is made at a breakout box at the component being tested. The wire length from the detection point to the component is the same as it was for susceptibility. In both cases, it should be as short as possible. The system configuration will dictate this minimum length. Lengths up to 12 in. will have little effect on the results as long as the lead length from the injection/detection point to the component is the same.

The overall plan is somewhat hybrid in that the compatibility is measured on both the component and system level. This is immaterial as long as it results in good compatibility measurements. An advantage of this approach is that at the system test level, the injection type tests are already done. The detection results can be checked for compatibility immediately. As such, there is no need to stop system testing if an anomaly occurs. The compatibility or lack of it is defined and a fix can be added and tested after the system test. In most cases the fix can be tested on a component level.

III. Application to *Biosatellite* Program

On the *Biosatellite* Program conducted by NASA Ames Research Center, the 30-day mission involves orbiting of a live primate for 30 days. The recoverable capsule is 39 in. in diameter and 39 in. deep, with a paraboloid shape. The vehicle uses a fuel cell for primary power with an orbital battery for peak loads and emergency. The life support subsystem maintains a nominal temperature, humidity, pressure, and oxygen-nitrogen environment. The primate is instrumented to measure physiological processes and brain waves. In the psychological tests, the primate is rewarded with food pellets. The primate is given food and water on a fixed schedule. Waste is removed and the urine analyzed. There is an attitude control subsystem to maintain a zero g environment. The information is transmitted via telemetry and the vehicle is capable of 70 functions via a command system. A timer continuously causes timed events to occur. A separation subsystem separates the adapter prior to deorbit and a deorbit subsystem gets the capsule out of orbit. A recovery subsystem ejects a parachute. A monitoring beacon and a flashing light are used for recovery aids.

In all, there are 120 different components that have electrical characteristics. On this program there has been no EMC testing or test requirement on a component level. All EMC testing has been on a subsystem and system level. Of the 120 components that have been evaluated, only 28 were given in-depth review for transient susceptibility. Of the 28, only 12 are to be tested for susceptibility. The remainder are either not susceptible by design and can be shown analytically to be safe; are not critical if malfunctioned; or are used in an independent fashion. An example of each case is:

(1) Lines with relays, or integrating circuits with long time constants on their inputs.

(2) A short transient will cause the temperature controller to increase temperature for the period of its duration. However, the thermal time constant is so long that microseconds will not change the temperature before the control is re-established.

(3) The deorbit subsystem uses its own battery and must be armed by a relay closure. No other connection is made to it except for telemetry outputs, so transients must be introduced only at a specific time and at a high level to an isolated subsystem.

In all, some 70 lines will be tested for susceptibility at the component level. The detection in the system qualification tests will be made simultaneously with conducted tests for broadband and narrowband interference. Eight channels are to be measured on each run using a Micro-Instrument transient detector. The mission sequence takes 10 to 12 hours to perform. Consequently, injection tests would be prohibitive for transients unless this method was used. The components were to be tested starting in February and the system in July of 1968. The results will define transient compatibility for the *Biosatellite* Program.

Discussion

Philip R. Rogers. This approach depends on the component engineer being the most knowledgeable about any given component in the system because he designed it. The subsystem engineer should be the next most knowledgeable person about any single component. The EMC engineer may not know much about the component, but he should know about the EMC parameters.

The component engineer does need a little help. At the General Electric Re-Entry Systems Department we have a course in EMC that is available to just about everyone. We have had 150 to 200 people taking it in the last 2½ years. It is 22 hours, 2 hours a week for 11 weeks, in which we try to explain EMC to our component, program, and systems people. A good number of

Discussion (contd)

our component engineers have taken this course and it cross-fertilizes their operating groups.

We do not have a standard specified method of measuring transients. Mr. Bernard Schenker came up with a nice method of measuring transients in a system and it is the method we intend to use.

Bernard D. Cooperstein: You said that if a device will respond to a short duration transient, it will respond the same way to a longer duration transient. If the transient is of fairly long duration and has rise times which are commensurate with a slow pulse, the frequency spectrum generated by it will not be the same at the higher end as a short duration transient with faster rise times. If the susceptible device responds to higher frequencies because it has a band-pass characteristic, it will not respond the same to both transients.

Philip R. Rogers: The response of a logic device is usually not frequency sensitive. It is sensitive to a voltage level. I am not talking about receivers with a specified bandwidth, but a logic module or a flip-flop circuit that is sensitive to a voltage level.

George N. Burkhardt: You mentioned, when you were defining the roles of what you call the component engineer and which I interpreted as being a unit engineer or the man responsible for a black box, the subsystem engineer and the EMC engineer; that the unit engineer should be intimately familiar with the circuitry; the subsystem engineer should be intimately familiar with the subsystem; and, the EMC engineer should be intimately familiar with EMC. My question is how can the EMC engineer be effective at either the unit or the subsystem level unless he is also intimately familiar with it?

Philip R. Rogers: He must become familiar with it through the component engineer and the subsystem engineer.

George N. Burkhardt: On a direct basis or secondhand information?

Philip R. Rogers: Preferably on a direct basis. Most of the time it is on a direct basis.

George N. Burkhardt: Would you define compatibility for me as you see it?

Philip R. Rogers: Compatibility is the capability of a system to survive and operate normally while it is in its own EMC environment.

George N. Burkhardt: I agree. Can I replace EMC environment with tactical environment?

Philip R. Rogers: Yes, if you want to cover a broader scope.

George N. Burkhardt: Then is it the intent of a company producing a product to deliver a system that meets a forgone set of specification limits, or to deliver a system which will perform under (1) the primary mission requirements and (2) the tactical environment?

Philip R. Rogers: If we are making a payload for a tactical weapons system, for instance, I believe that it would be the responsibility that it work in its entire environment – launch, prelaunch, checkout, or any phase of operation. So it would be the entire tactical environment, as I think you are using the word. If the requirement was different, if a given satellite was suddenly interfaced with other equipment, the compatibility at the interface would have to be defined, which is quite difficult in most cases.

George N. Burkhardt: I get the feeling that EMC compatibility means defining a system to a preconceived set of specification limits.

Philip R. Rogers: It certainly does. Take the case of the *Biosatellite*, in which we were defining on the system level – what the system should live with, how much interference it could generate, and the susceptibility level it could live with. This is its own creation. The *Biosatellite* itself is not connected to anything electrically, except its own ground support equipment. It goes on top of an *Agena*. It gets boosted into orbit. It RF transmits to the earth. From there on out we have no contact or no electrical interface directly with any other vehicle. The compatibility that must exist is that compatibility within the satellite itself, with its ground support equipment, and at the launch facility. It is our feeling the specification requirements we have on us will permit us to live in that environment. They are no worse than in our test facility.

George N. Burkhardt: Generally this is true. The real point that I wanted to make is that when this satellite and the functioning parameters of the various subsystems on it operate harmoniously together as a system, the specification values become superfluous. I think you have then achieved what you intended to do from the beginning of the project.

Philip R. Rogers: I said in a brief statement at the beginning of my discussion that the intent of any EMC specification on the program should be compatibility, regardless of how you specify it. If some agency integrates an entire system and I become a contractor on an overall system, someone at the system level should define what my environment will be. Now I can go ahead and say how I am going to live in this environment. Then I have an internal environment that I create myself, which I must live with. Somewhere, from the overall weapons, missile, or satellite system, there must be a definition of what the environment is. From there it can be taken step by step downward into the black box level.

Robert O. Lewis: If you were using the Mil-Spec-type spike generator for the susceptibility tests on digital circuits, in my opinion this is a little unreasonable type of test, since you use a $\frac{1}{2}$-Ω internal impedance type generator to feed a high-impedance type circuit. If the designer does put a capacitor across his input and you connect a low-impedance generator to it, you have overly penalized him for making a nonsusceptible circuit, because it will draw a great deal of current, and then have a common mode problem due to the current in the return wire.

Philip R. Rogers: I do not believe that he is going to have any more difficult problem than if we had dumped that kind of energy into his circuit due to a system generated transient.

Robert O. Lewis: Yes, but the point is that you never can dump that much energy into a high-impedance circuit with anything but a short circuit.

Philip R. Rogers: Well, if he has a capacitor across the input, the transient is looking into almost a short circuit, which is protection.

Robert O. Lewis: Yes, but if he has 4 or 5 ft of wire, he can only have a maximum of 100 pF coupling capacity into the wire, which would require an extremely high voltage through that capacitance to get any amount of energy into the circuit, or anywhere near the energy that could be put into it if he had a capacitor across the inputs.

Philip R. Rogers: That is correct, so essentially I can put on higher and higher voltages and eventually cause a malfunction and so still determine the level.

Discussion (contd)

Robert O. Lewis: Yes but he will malfunction due to the current in the return wire which he will never have in the operational condition, because of the low coupling capacity.

William R. Johnson: You mentioned once during your talk, and I have heard it mentioned a couple of times here, that the transfer functions are a gray area that we will probably never know. I would like to take issue with that. We are presently working on a contract for NASA, a phase of which is to describe and model these transfer functions. The results to date have been that we have modeled about 8 to 10 different wiring configurations, including balanced, twisted pair, various shielding configurations, single-grounded, multiple-grounded and any combinations of these, and we've been able to achieve an accuracy of probably 3 to 4 dB in any configuration up to the quarter-wave resonance of the cable. Beyond this, the coupling oscillates due to VSWR on the cable, but even here we have been able to model the maximum envelope to within about 15 dB. So I think we really ought to look at these kinds of functions instead of dismissing them as being on the impossible side.

Philip R. Rogers: The fact that you can get 3 or 4 dB is very startling to me and you are to be congratulated. I have never seen any analysis that comes this close to actual measurement. The 15 dB beyond the quarter-wave is quite a good job of modeling.

William R. Johnson: We had not seen that either until we got this contract and had to basically come up with these measurements. The only weakness that exists is how [illegible] you can extrapolate the laboratory empirical results to an actual spacecraft configuration. That will probably not be 3 dB, but I think we are able to get within a factor of 2, or perhaps 3, of the actual induced voltages and currents.

Philip R. Rogers: What you are saying is that you take a specified harness and put energy of some kind into a pair of wires and find out what comes out on the other wires.

William R. Johnson: That is correct. You put energy in on two wires or one wire. There are many configurations that can be modeled and these include conversion of balanced mode signals to common mode. The problem of chassis ground vs electronic ground that C. L. Miller was speaking of also comes out of this and the models are not really difficult. The point I am trying to make is that we continually tend to discard things that first look too complex. If we do not start picking these things up and analyzing them and finding out what they do, even if we can only do a first-order analysis on them, we are going to be relegated to a "black magic" art.

Philip R. Rogers: If there is a method of defining the coupling factors that well, I agree with you. It should be used. I do not know how to come within 20 dB of this characteristic analytically between two black boxes on a spacecraft. I can guess, but that is about it. Do you have documentation of this method available?

William R. Johnson: No, this contract will be up July 1, 1968, at which time we will be returning it to NASA and I assume they will make it available. There will be a couple of papers given at the 1968 IEEE EMC Conference in Seattle. One will be directly on modeling.

Chet Hastings: I want to make a comment that supports his position on that. We have intentionally used fixed wires and a fixed wiring configuration in lieu of attempting to analyze an aircraft wiring configuration, and then specified the noise immunity needs of the circuitry based on those transfer characteristics. Where you can control the wiring and, in fact, intentionally create a fixed wiring situation, the method works quite well.

Philip R. Rogers: We do the same thing essentially, but it is by guess rather than by actual design numbers.

Ben Weinbaum: I would like to chime in my voice into this chorus and say that determination of transfer functions is possible. I remember we started doing it back around 1961-62, when we laid out harnesses and tried to load them with appropriate terminating impedances; then, drove them with broadband functions to determine the coupling into the other impedances on the system. We have worked both in the time domain and the frequency domain. What made it possible to determine transfer functions as a function of frequency was to fairly conveniently transform functions of time into functions of frequency. This was done through the development of a kind of special purpose analog computer that solved Fourier integrals. It is a kind of laboratory device and, depending upon the program, is a very appropriate thing to do. You get good results.

Philip R. Rogers: This is after you define the interconnection harnesses?

Ben Weinbaum: Yes, after you have the harness and can mock it up. This harness is not necessarily installed and it may not look too much like the harness that will be installed, but you have a good starting point.

Anonymous: In view of the interest in trying to predict or model wire-to-wire coupling, I would like to mention that the Boeing Company, two years ago, put out from Huntsville a report which did one of the most elaborate and scientifically sound pieces of work in this field that has come to my attention. I do not happen to have the reference right now. They started out with the basic field equations and did not make approximations, although it was absolutely necessary that you define the proximity of wires along their length. That meant you could, in fact, define the routing and the bundling. I think they treated 18 cases where wires were bundled in the center of bundles; these were twisted shielded pairs, etc. I would suggest that you look at the Boeing reports if you want to go into it in depth.

Allen E. Dorband: I can vouch for some of the studies that were performed several years ago. I am quite interested in some of the comments that were presented here today in the prediction area. We have definitely not given up the idea, but have run into some rather astounding problems of which some have been mentioned here also. I think we are on safe ground when we talk about general cabling problems, especially when we can mock them up in the laboratory, set up the transfer functions very capably on the computer, and come within a few decibels of predicting the coupling. However, when you get into an area with ground loop problems, they are very unpredictable. We started to do some extensive investigation which B. L. Carlson has done. I believe it was on a special program that was trying to determine ground loop problems. We had the problem of impedances. As long as we could simulate an impedance in a particular path and we could measure this fairly accurately, we had fairly good results. But, where you do not know the impedances across mating surfaces because of bonding problems, maybe semi-loose connections, poor soldering connections, etc., you do have very unpredictable results. I do feel that if we can set up our transfer functions in such a way that we can model them in the laboratory, then take those same models and be certain that we have the same configuration in the spacecraft, we have a good possibility of prediction through computer techniques.

N69-[illegible]443

Static Electricity Case Histories

Sam Sabaroff
Hughes Aircraft Company
El Segundo, California

I. Introduction

In every project there is a class of people which I call "PWs" – that's an abbreviation for professional worriers. One day my boss came to me and said, "Sam, you worry about static," so I joined the large group of worriers. There were reasons for his telling me this back in 1964. One of these was the *Delta* accident killing three people which was attributed to a squib that ignited due to static charges. Actually, a plastic bag was removed and all of a sudden it went up. Then the *Ranger VI* failure at JPL at one time was attributed to static and caused a congressional investigation. There was also an incident at Hughes which was called the T-2 incident.

In my opinion, without the static investigation, such as the one which I started and worked on, we might not have gone into as much detail with EMI, noise pulses, grounding and bonding, and all the other motherhood types of items that we normally deal with in EMI. At that time, we interfaced with JPL and in my opinion the interface was fantastic. We all had similar goals and common aims. Most of the things about which I shall tell are histories of things that happened about 1964. The detail into which failure analysis goes on a program, such as *Surveyor*, is fantastic. There are volumes of material on static charges and discharges, and the problems associated therewith that I have drawn on for this talk. It has been mostly clip and paste with only introductory paragraphs and those comments necessary to tie the material together.

A great many people were involved both at Hughes and JPL in failure review boards in order to satisfy the ultimate requirement of trying to decide why something unusual had happened. The area where no one was quite certain that anything had happened at all, was in static problems. This was because you could not define it too well, could not duplicate the situation too well, and could not look for a real reason which would satisfy someone, such as an investigating committee who knew little about static. A great many informal discussions were held with many people in this study. Particular mention should be made of the Malibu Research Laboratory, the Space Systems Division of JPL, STL, Rocketdyne, General Dynamics, Lockheed, Stanford Research Institute, and NASA. A portion of this study was published in the IEEE Transactions on Electromagnetic Compatibility of December, 1965.

II. Static Charge Sources

The major sources of static charge are on or near the earth. The list could include fuel handling, plastics, rocket engine charging, precipitation, friction, lightning, booster separation, and many others. The effect of a static discharge is impulsive with a steep wavefront and a broad spectrum.

To set the stage, Fig. 1, which appeared in the earlier paper, shows a charged sphere with a horizontal slit in the process of discharge. Note in particular the current path distortion around the slit which results in the voltage E across the slit. The effect of the slit is analogous in certain respects to a slot antenna. The longer the slit at right angles to the current flow, the greater the voltage across it. The voltage is, therefore, available as a source of interference. Figure 2 shows a slit parallel to the direction of the current. In this case, assuming a slit of infinitesimal width, there will be no distortion and thus no voltage across the slit. Figures 1 and 2 illustrate the

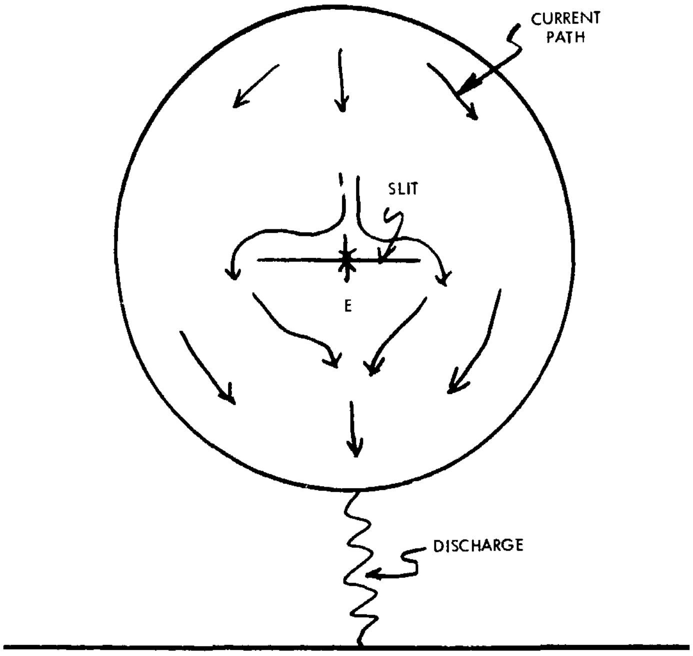

Fig. 1. Charged sphere with horizontal slit

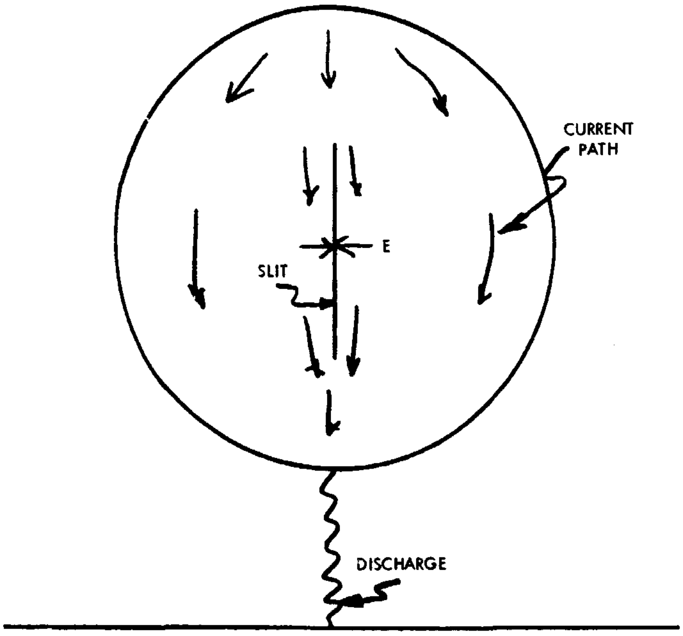

Fig. 2. Charged sphere with vertical slit

dependence of interference on the discharge path and explain the variation in interfering effects with different discharge points.

Figure 3 shows a charged sphere with a grounded island in the process of discharge. Assume that the ground wire is open or has a very high resistance and the whole conducting plane is charged to some voltage, say 100,000 V. Assume now that there is a discharge from the high-conductivity outer surface to ground. The sphere or plane discharges quickly, but the inner island takes time to discharge so there is the possibility of a secondary discharge at the top or wherever there might be a close spacing. Reflection on this indicates that this kind of thing occurs in many of the unexplainable events in static problems. You don't quite know where the discharge will take place, how it will take place, or what effect it will have when it does take place, because it is difficult to observe or duplicate.

Figure 4 shows the *Surveyor* spacecraft inside its shroud in the stowed position with the legs folded up. The folded spacecraft can be considered as the conducting sphere and all the wiring and other items inside the spacecraft as the little islands having various impedances with respect to ground. Figure 5 shows the shroud, which is a dielectric, over the spacecraft. The dielectric, of course, has the possibility of building up a charge on the outside as friction occurs with the air and various particles in the air. At one time, a great deal of time and effort was expended in consideration of making the shroud conducting and of trying to get people to understand the problem. (A professional worrier was on the job.) We had concurrence of some people, but at the higher levels it was disapproved and was not done.

Obviously, some of the management decisions were delicate ones that involved weight, time, delivery, costs, technical problems, and many others. In this particular case, it was decided not to do the things that the professional worriers wanted them to do. In another case, action was taken as the result of a worrier. Figure 6 is a retrorocket which is covered with thermal insulating material. The insulating material is enclosed in a wire mesh. By some experimentation, it was determined that it was possible to build up a static charge on the material, which was made up of Mylar or Teflon aluminized on one side. It was possible to build up voltages on the material on the order of thousands of volts, just by stroking it; so it was obviously a hazard.

In this case, the worrier had bounded the problem. Since management agreed that this was a hazard, the material was sewed with a wire mesh to protect the retrorocket against static charges and discharges on the aluminized surface. Specifications were prepared detailing the sewing method, the kind of wire used, and even the

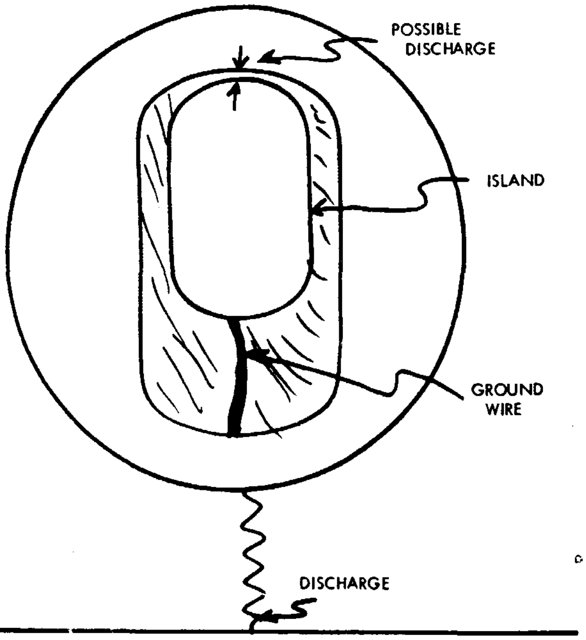

Fig. 3. Charged sphere with island

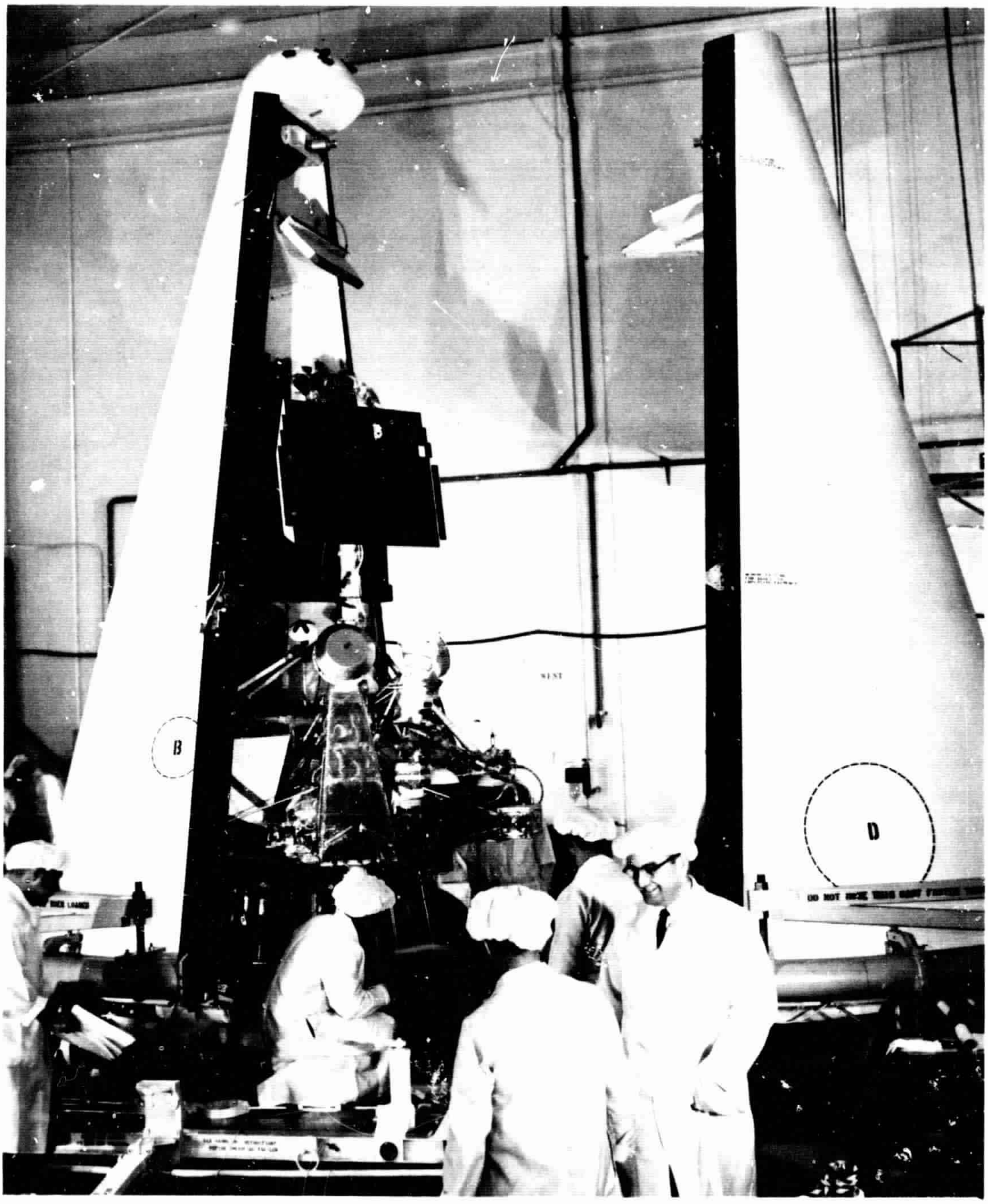

Fig. 4. *Surveyor* spacecraft inside its shroud, stowed position, legs folded up

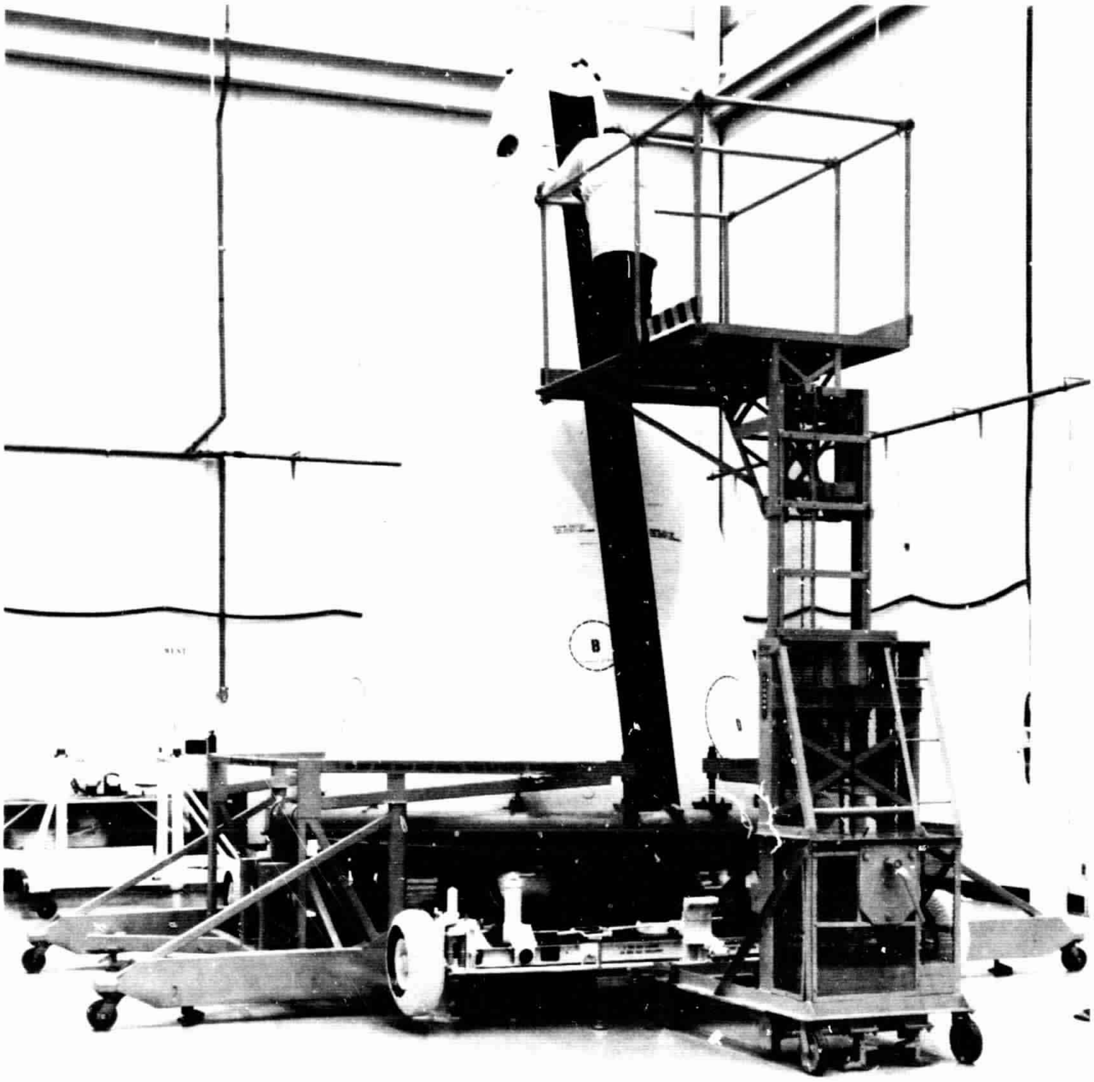

Fig. 5. Shroud over *Surveyor* spacecraft

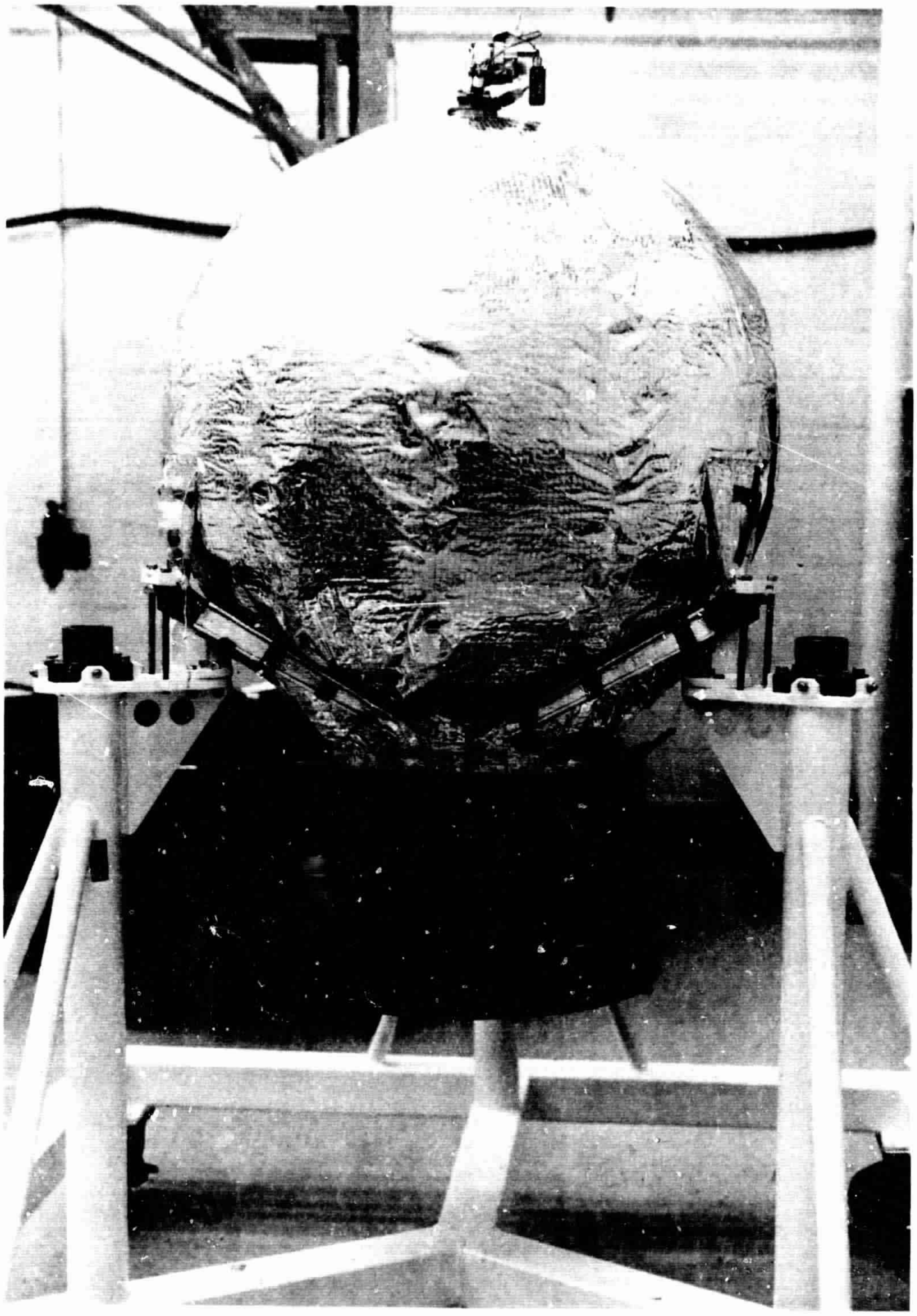

Fig. 6. Retrorocket covered with thermal insulating material

model of sewing machine to use. Quoting from a portion of the specification, "The wire shall be firmly attached to the Teflon surface in a pattern as specified... (in a particular drawing). The sewing shall be firm and tight and shall not pucker or gather the Teflon. There shall be no etching and printing or degradation of the aluminum or Teflon surfaces. There shall be no tears in the film. Breaks in the wire pattern shall be corrected by overrunning. Loose ends of wire and thread shall be trimmed." This continued in considerable detail.

III. T-2 Test Vehicle

Now turning to the T-2 incident which was mentioned at the beginning of this talk; the T-2 test vehicle was a simplified spacecraft designed to test the terminal descent system of the *Surveyor* lunar spacecraft. It contained the essential elements of the *Surveyor* flight control system: the doppler radar, inertial reference, the vernier propulsion system, and the appropriate electronics. The recovery procedure consists of the deployment of a main parachute, inflation of an air bag, and dump of the helium bottle and manifold so as to provide a safe landing. The weight of the spacecraft was severely limited by the scaling required. The spacecraft was dropped from a tethered balloon at an altitude of about 1200 ft. Attachment to the balloon was by means of a gondola which contained external power provisions and release mechanism.

An attempted test of the descent system was made at Holloman AFB on April 28, 1964. The T-2 had a complete system check on the ground including all the mission loads and the emergency recovery provisions. Approximately 40 min prior to its scheduled drop, T-2 was observed falling free from the gondola. Upon observing the unexpected descent, the test director sent the command for emergency recovery. The main parachute, instead of deploying, separated from the craft, leaving T-2 in free fall. It impacted on the ground causing total loss by impact and fire.

Immediately after the accident, the test crew performed a preliminary inspection of the wreckage to determine the status of the various squibs, fuses, and the condition of critical spacecraft elements that could have contributed to the accident. Theoretical and experimental data established the possibility of a high potential existing between a suspended spacecraft and the earth. A calculation indicated that a nominal lightning bolt within 100 mi could induce a current of more than 1 A in a 1200-ft cable for a period of 10^{-5} s. The weather at the test site was quite favorable, but the weather report for that day indicated cumulonimbus clouds usually accompanying thunder storms at 7 a.m. in Western New Mexico and Southern Arizona, with thunder storms later in the afternoon.

At the time of the accident, the tow wire from the spacecraft was ungrounded at earth, because a resistance measurement had been taken with an ohmmeter. What happened was obvious. Theoretical considerations showed that as much as 50,000 V may develop between an ungrounded tow wire and earth. An experimental measurement after the accident showed 13,000 V. Early in the program, the test crew had observed practical evidence of this potential by drawing up to ½-in. arcs between the tow wire and earth. Because of this experience, a permanent ground was designed into the tow wire circuit. This ground was removed during ohmmeter testing. A worrier did not function hard enough somewhere along the line. He did not shout, make himself known, or say that you should not do this, and so it slipped into the procedure.

The test results and the investigation resulted in a great deal of written material. I am merely skimming off the highlights that apply to the static problems. The report said that the practical mechanisms for sudden static discharge included breakdown between the tow wire and the spacecraft ground, breakdown between the tow wire and a 22-V terminal, or breakdown at earth followed by either of the above. The report said, "The investigation has been unable to establish positive evidence of any single event which could have caused all of the observed facts of the accident."

Of course, I'm slanting this to static problems and the opening of the ground circuit for ohmmeter testing as being the cause of the failures. But we must remember that the investigating board covered such a wide area, that this was almost buried in insignificance in the total amount of paperwork. When I reviewed the report, these were the kinds of things which seemed to bear on our problem.

A. SCR Circuit Susceptibility

However, past experience on the program and experimental tests conducted in the course of the investigation showed the susceptibility of the spacecraft SCR circuits to extraneous transient fields or noise. This, together with the one positively identified circuit failure, an open squib interlock which was a real failure, provided a basis for a hypothesis of a single initiating event: a static discharge. The report was not certain about this causing multiple firing of the SCRs. The alternative arrived at was that the accident may be explained by the hypothesis of the firing of a single SCR by static discharge and a coincident additional failure of the foil switches upon airbag inflation.

The board then being unable to cite explicitly the cause of the accident made the following recommendations: (1) further investigations to help establish the possibility and nature of certain failure mechanisms; (2) design changes that would prevent repetition of the disastrous parts of the present accident, whatever its ultimate cause; and (3) procedural changes to add safety or provide diagnostic data in the event of a future accident. Many of these corrective actions had already been recognized and undertaken by the T-2 test group.

The specific corrective actions recommended by the board were then listed. Three of these concerning the static problems were: (1) continue static discharge experiments with the backup vehicle, (2) obtain an understanding of the phenomena of the random firing of the SCR circuits, and (3) determine the resistance of redesigned circuits to all possible expected environments. A test was performed at Holloman AFB on May 7, 1964 in an effort to determine practicably the effect of static discharge on the spacecraft control circuits. It showed that the squibs would blow. There is no doubt in my mind that the reason for the reliability and successful functioning of the *Surveyor* had to do with these early decisions as to what kinds of things to look for and what to do. The static problems and the solutions thereof bear on the whole spacecraft.

One of the recommendations of the board was that squib circuits using SCRs may be reliably used providing certain precautions are observed. These are:

(1) Provide a low resistance, less than 1000-Ω dc path, between gate and cathode on SCRs.

(2) Provide sufficient anode and gate transient decoupling on SCRs in all cases.

(3) Carefully observe temperature limitations.

(4) In procurement, specify sensitivity, dV/dt, and trigger gate current.

(5) Perform 100% testing before installation in the circuit.

(6) RF shield and decouple where necessary.

(7) Provide negative gate biasing, if necessary.

These are all motherhood items that, as RFI people, we would hope would be done normally anyway. So this was an impressive lesson that we should continue to look for these things.

B. Engineering Recommendations

The board then made recommendations as good engineering practice to correct circuit and wiring deficiencies for the squib firing, as follows:

(1) If there is an RF problem or static discharge problem, put circuitry in reasonably well shielded boxes and decouple the input and output lines.

(2) If hard line is necessary, provide a positive static discharge leakage path to earth ground.

(3) Interlock SCR gates without series diode and route through umbilical pins only.

(4) Use negative biasing to gates for increased protection.

(5) Isolate squib circuits from other circuitry and parallel them with their own energy source.

(6) Make all wiring on squib lines either twisted shielded pair, shielded pair, or twisted pair, in that order of preference.

(7) Ground the squib cases to prevent static discharge from case to bridge wire element. This last goes back to the *Delta* malfunction.

These are familiar words now to an EMI engineer but this was back in 1964. This then completes the T-2 incident, which was one of the sparks that ignited the static investigation.

IV. Static Charge on Plastics

Another problem that we encountered at Cape Kennedy was the charge buildup on various plastic coverings that are used for protection of painted surfaces. An investigation was made to see what could be done about controlling any charge buildup in the dangerous environments of propellant loading and whenever the spacecraft was hot. The *Surveyor* spacecraft was almost entirely encased in plastic film for protection.

These wrappings were removed from time to time and were completely removed prior to launch. During unwrapping in particular, high static charges are generated on the plastic. The possibility exists that these charges may cause explosion of the fuel during loading, premature ignition of various squibs, or ignition of the retro-rocket engine during prelaunch checkout.

As a means of reducing the static charge on the plastic, a commercial antistatic unit was considered. This device blows air over needle-like electrodes at high potential. The air passing over the electrodes becomes charged. The charge persists until discharged at a surface by an ion of opposite sign or a normal recombination in the air. If the air passes over a plastic that has picked up a charge by rubbing or other cause, the charge on the plastic is discharged. If the plastic is wrapped around a grounded device, the discharge occurs in a very short time.

This device was extensively tested to make certain that it would work and would not cause any deleterious after effects. The antistatic device was placed approximately two ft from the plastic surfaces under test. The charge on the plastic was measured by using a Keithley Electrometer, Model 200B. The probe was an aluminum disc approximately 1 in. in diameter. The samples consisted of sheets of Teflon, both aluminized and plain, and plain Mylar. The sheets, which were wrapped around an aluminum tube painted with *Surveyor* inorganic paint and suspended in a nonconductive frame, generated the static charge as they were unwrapped. By means of the capacitive pickup probe, the increase in charge as each layer was removed, was easily observed.

The films were rubbed by bare hands, with cotton gloves, and with polyethylene-coated nylon gloves. The reference state was established by measuring the charge developed in normal laboratory air. Then, the experiment was repeated with ionized air blowing charged air over the sample. Each sheet was discharged after mounting in the frame and prior to testing. The charge and discharge in the presence of the ionized air is very rapid, with complete discharge of the plastic surface occurring from 1 to 3 s after generation of the charge. In each of the glove tests with the sheet mounted in the insulating frame, the charge was rapidly removed by the ionized air.

A film of Teflon was rubbed while the film was attached to a painted surface. This charge was discharged; then, when the film was removed, a large charge was noted. When the cover was removed, a large charge was built up. When the film was flooded with ionized air, all the charges were reduced to a low value. A similar effect was observed with Mylar. This system was then used on the spacecraft. Two large ionized air blowers were used to blow on the spacecraft at all times when there was a danger of spark discharge. Now, a question was raised concerning the generation of nitrous oxide and ozone by the operation of this blower. The effect of these chemicals could be deleterious to the metal and other things on the spacecraft. The Health and Safety Branch at Hughes Aircraft Co. was asked to conduct a test on these contaminants. No device was available for measuring the quantity of ozone. However, 0.02 ppm of ozone may be detected by its odor, and no odor of ozone was noted. By this simple test, it was agreed that ozone concentration would be less than that amount. The nitrous gas content of the air was measured and found to be 0.1 ppm. A dangerous amount was considered to be 5 ppm.

These tests pointed out very clearly that the ionized air could be used to advantage for the removal of static charges on plastic surfaces. The source may be several feet away from the plastic surface to be discharged. This system was used on *Surveyor.*

V. Transistor Failure

Turning to another case history, the worrier overlooked something. This concerned a temperature sensor transistor switch failure. As it was unknown why the transistor failed, a whole series of analyses were made and tests conducted to find out the nature of the failure. One of the tests consisted of monitoring the temperature sensor lines, both by scope and recorder, while various spacecraft operations were performed. No unexpected transients were observed on the scope, but transients were recorded on the recorder. Investigation of the recorder transients revealed that these were internal to the recorder–RFI. So, in monitoring the leads on the temperature sensor switch, no transients were observed that would indicate a spacecraft problem was causing the failures.

The failure analysis reports of the failed transistors stated that some of the transistors were cracked, which appeared to be as a result of mechanical shock. Typical failures were a short through the base region, collector-to-emitter short, electrical overstress, current overstress, and collector pellet melted. A harness investigation was run to determine if an intermittent condition in the spacecraft harness may have caused the failure. The wiggle harness test, with spacecraft power supplied, was performed and no voltage transients were detected on the sensor lead. This test consisted of shaking the harness with everything working.

The occurrence of these transistor failures, thought possibly to be due to a high-voltage, low-capacitance electrostatic discharge, prompted the following inquiry into the energy levels required to destroy certain types of transistors. As a result of this guessing that it was due to a static discharge, quite a few transistors were blown up. Each transistor was exposed to increasingly higher levels of energy until a failure occurred. In some cases, the energy levels required to produce failure or degenerative changes appeared to be higher than the 285 μJ available from the test equipment. The energy source consisted of a 6 μF capacitor kept between 500 and 1000 V by a high voltage power supply. The source was employed to charge a much smaller capacitor through the transistor under test each time a knife switch was activated. Any device that exhibited either outright failure or a parameter change exceeding 10% was considered as having failed.

The total number of transistors stressed in the course of this investigation was 19. Of this number, only a few were subjected to each of the several tests. However, certain trends appeared and conclusions were postulated. While certainly not definitive, they are clearly indicative of a relationship between low energy transients beyond the breakdown voltage and semiconductor degradation. Approximately 65% of the transistors failed when subjected to transients having energy levels between 40 and 150 μJ. Those that did not fail withstood energy levels as high as 285 μJ. Only two, of which one was accidentally destroyed, did not show a marked and apparently permanent change in the V_{ce} versus I_c characteristic. Several of those that finally were destroyed also showed a progressive change in characteristics.

One group of transistors was separated into two lots. One lot was stressed by a high-voltage, low-capacitance transient and the other by a lower voltage transient. Those members of each group that did fail, did so as a result of transient energy levels. This led to the tentative conclusion that voltage level, as long as it is in excess of breakdown, is of secondary importance to energy level.

In some transistors there appeared to be a correlation between the BV_{ceo} of an undamaged unit and its susceptibility to damage by a transient applied from collector to emitter. Epitaxial and alloy transistors both exhibited failure in the 40–150 μJ range, although the epitaxial configuration afforded higher breakdown voltages. It appeared that once these voltages were exceeded, epitaxials were no more resistant to transient damage than alloy types. These transistors were dissected and sectioned, and photomicrographs taken. The important point here is that when a static discharge takes place, the transistor doesn't have to burn up; it explodes. The mechanical failures that occurred in the early transistor failures and were attributed to something else, were actually a static discharge. So, if you dissect a transistor that has failed and all you see is a faint crack with no burn, it could very well be due to a static discharge.

It is apparent from these tests that a human charged to a voltage of 1000 V or more by static electricity has sufficient potential energy to destroy a transistor merely by touching any terminal of the transistor with one of the other terminals grounded. The review board in this case made some recommendations to prevent damage.

1. The review of practices to eliminate the opportunity for static buildup on operating personnel and correction where needed.
2. Provide for use of antistatic treated protective clothing and spacecraft covers.
3. Ground the spacecraft at all times.
4. Terminate disconnected connectors with static drain resistors or special terminations when the spacecraft is without all control items installed or connected.
5. Assure that all sensor lines are terminated with transducers or equivalent resistors.
6. Investigate and reinvestigate spacecraft for ground-isolated control items and establish grounds where necessary.

In many cases, a person would walk by a box which was ungrounded and it would build up a potential of several hundred volts. Someone else would walk by and add more charge to it until eventually a transistor would break down. It did not always happen. It was intermittent and depended on the kind of charge that was built up, the polarity, the way it was rubbed, etc.

In closing this brief summary of some static case histories, it must be emphasized that the resolution of this aspect of EMI requires the application of the whole spectrum of EMC capabilities. The analysis of potential problem areas and the application of practical fixes crosses all organizational lines, both technical and administrative. Early recognition and remedial action are a prerequisite to a successful mission, as exemplified by the *Surveyor* program.

Discussion

Lawrence C. Montgomery: I have a couple of comments – one of them is that many engineers have decided that, since the range requires 1-ampere, 1-watt type squibs, they have solved the static problem. They say: why do we have to worry about these static charges? On the Spacecraft Prototype T-21, I think it was 1-A, 1-W squibs that were fired due to static discharge. Therefore, there is still a problem.

Sam Sabaroff: That is true. In many cases the squibs are safer than the associated circuitry. When I say squibs fired, I do not always mean that the squibs themselves were initiated by the static. That is not entirely true. If there is an SCR (silicon controlled rectifier) or transistors somewhere in the circuit, exposed RFI-wise to the external environment, *that* can initiate the explosion of the squibs.

Lawrence C. Montgomery: My second comment is on the ionized air blower. It works quite well to get rid of the static charges; however, some of the scientists should remember to keep an eye on it because on *Mariner* 1967, we had a problem because we saturated one of the instruments with the ionized air blower. We had a hard time finding it. Another comment concerns techniques. You probably all are familiar with the static charge measuring meter that is commonly used. We made handy use of it on the *Surveyor* while at Cape Kennedy, taking measurements every hour or so around the spacecraft, because we did not trust that all of the static charges had been taken care of.

Sam Sabaroff: That is entirely correct. I took the meter home one day and tested it. I had a piece of Teflon and I took what I call my standard for rubbing Teflon, a camel's hair brush, and just brushed it. I could detect thousands of volts on it.

Gurdip S. Saran: There are several important points I would like to bring up – the first one pertains to the voltage buildup on the *Surveyor* spacecraft during the trajectory. S. Sabaroff and I were both involved with this and have done some analysis on it. The first one is the critical voltage breakdown as a function of altitude. Usually I have heard altitudes such as 100,000 or 50,000 ft. I think you must consider the shock around the spacecraft or the area around the nose fairing. It depends on what particular point you are referring to; the booster or the spacecraft. For instance, I think if you will look at the stagnant point at the nose fairing, you probably will have a critical point around 200,000 ft or higher. However, if you are referring to some point in the back, it will probably be around 100,000 ft. I really bring this up just to get some other comments on this.

The second point is that early in the program we had started to think about the electric field strength measurements. We had given some thought to flying an experiment but, as a result of lack of timing, we could not quite get to this. I bring this to the attention of the fellow scientific experimenters in the category that we have been talking about the last few days. There are engineering experiments and the scientific experiments. I would like very much for someone, who has the first opportunity, to fly this particular type of experiment. If he has a better chance of flying this under the classification of a scientific experiment, I would be willing to back it up as a scientific experiment rather than an engineering experiment.

Another point I would like to mention here is the concern we had for a discharge before the spacecraft touched the lunar surface. We did some studies and satisfied ourselves that we would not have a static discharge problem. If you take the exhaust from the retro and from the vernier engines, you can treat them as an equivalent impedance; a certain ionized medium. Without being too fancy, you can say that this ionized medium is going to be a uniform charge distribution with a certain impedance so that it will help drain the charges off if they are built up. Returning to the electric field strength measurements, it would be very useful to have these experiments made in the near future. Like all of us, I would like to be able to make a statement that we can predict the electric field strength, not to approximately one order of magnitude, but within one order of magnitude.

Richard H. Kelkenberg: I am rather ignorant on the subject that you are talking about, but it is quite interesting. The question that comes to my mind is that you talk in terms of possible potentials or that you can measure potentials on the spacecraft, but then you say the key thing is the energy content. Have you actually made measurements to determine what quantities of energy you do accumulate? If you have the potential, is there some way you can actually find the equivalent capacitance so that when you discharge the charge that is accumulated by someone walking by, or by stroking with the camel hair brush, you know how much energy is there?

Sam Sabaroff: Ordinarily, when you delicately rub something, the energy content is not very high. The voltages are high because of the type of insulating surface. I cannot answer your question directly and I really can't give you any numbers. I might quickly point out that one big area of investigation which I didn't even mention is that we actually took a spacecraft, the Spacecraft Prototype T-21 test vehicle, and put it through its paces from the point of view of its susceptibility to static charge and discharge. It was catastrophic. By that, I mean that we ruled out almost everything that could blow out. I have a report on this but don't have time to read from it. It pointed up quite distinctly and quite heavily that we have to keep looking at grounding, bonding, shielding, low resistance grounds, and all sorts of things; which bore fruit on *Surveyor* where 5 out of 7 of the spacecraft were successful.

Discussion (contd)

Henry M. Hoffart: Several years ago, Western Electric issued a report and stated that, on their solid-state production lines, the female workers generated up to approximately 2500 V potential. Now the potential difference can reverse from toe to head and so various parts of your body can have various levels of potential. They found that the average female is equivalent to a 600-pF capacitor; so you can base the energy levels on that.

William J. Coleman: The energy which can be stored electrostatically by a charged object is given by the relatively simple equation that energy is equal to one half the voltage squared times the capacitance. The trick, of course, is to determine the correct value of capacitance to us . In the case of spacecraft or other isolated bodies, one can use the method of equivalent spheres, then simply take the radius of the sphere as being equal to the capacitance. Of course, when you have separating bodies and are worried about the interstage discharge, the capacitance becomes much more difficult to determine because now there is a mutual capacitance parameter to consider. The reason I wanted to make the comment about capacitance is because of the value just quoted for a woman. The capacitance is quoted for workmen as being something like 750 pF. However, this value is obtained by measuring the capacitance of a typical person, geometrically speaking, standing with typical thickness of shoe soles on a conducting floor.

We recently made some measurements of capacitance at the North American Rockwell Space Division, in which we wanted to know the capacitance of an astronaut lying on the couch of the command module. We found that value to be on the order of 1200 pF. Then we noticed of course that the capacitance of a person is exponentially proportional to the distance of the body from the conducting plane. For instance, we had Dr. James W. Haffner stand on a conducting plane with insulated socks on and his capacitance increased to 3,000 to 4,000 pF as I recall. So you have to be extremely careful if you do computations on the energy available for discharge. Make certain that you have the right capacitance. You should not use industrial values, unless you are aware that these values were taken for typical thicknesses of shoe soles.

Sam Sabaroff: We worried about separation of *Surveyor* from *Centaur* and how to keep metallic contact with the *Surveyor* spacecraft until it had gone some distance away, and then have the metallic contact break. This meant then that the charge and potential due to an abrupt separation would be partially nullified. After worrying it right up through to the top level, JPL issued a letter on this subject from which I will read. "The potential problem of electrostatic discharge between the *Surveyor* and *Centaur* during separation has been under comprehensive examination. Consideration has been given to various possible detailed studies and tests to better understand the discharge phenomena. Other programs using similar vehicles that may have encountered electrostatic discharge problems have also been investigated. In addition, possible hardware changes to minimize potential deleterious effects on the spacecraft have been carefully studied. The feasibility of incorporating discharge wires as proposed in the reference letter cannot be tested and verified in time for SC-1. Based on analysis made so far, it has been concluded that the risks of discharge problems for SC-1 are acceptable at this time. However, investigations of the potential problem should continue for subsequent missions." SC-1 had been delayed and delayed due to some of these problems being worked on and our not having full confidence that it would work. So this was a managerial decision and apparently a correct one.

George N. Burkhardt: I would like to point out that the particular recorder that Mr. Sabaroff mentioned here that was recording its own transients was the ground support recorder that I referred to in my talk also. This particular recorder was an integral part of the direction finding equipment that was in use servicing that spacecraft. We measured broadband interference levels from that instrument which, within the band-pass of the receiver, would keep them blocked at all times during tests.

N69-25444

Control of Electrostatic Interference in Spacecraft

Aubrey J. Butts and Robert W. Ellison
Martin-Marietta Corporation – Denver Division
Denver, Colorado

I. Introduction

This paper was written to relate recent subsystem internal EMC problems in the electrostatic area and to convey a concern for the control of such phenomena on spacecraft programs. Hopefully, this discussion of the problem, analysis, and laboratory tests will serve to point out the need for prediction and resolution of electrostatic problems on existing or future spacecraft programs.

Inertial guidance systems anomalies were experienced on two recent spacecraft launches. On one flight, the inertial guidance system commanded shutdown before the programmed velocity-to-be-gained had actually been achieved. On the other flight, the missile steered a course that was not expected. A subsequent bit-by-bit playback revealed that four computer errors had occurred on the first flight at an altitude of 88,000 ft: (1) an error in the multiply operation, (2) an error in instruction processing, (3) an error in the accelerometer processor, and (4) an error in vehicle attitude. Guidance system performance was satisfactory prior to and after the anomaly. On the other flight, an erroneous accelerometer count was generated at an altitude of 58,000 ft; this resulted in a yaw left steering command taking 10.5 s to null. However, transient detectors installed prior to the second flight were not affected. Postflight analysis revealed that the digital computer was more susceptible to submicrosecond transients than the detectors, which in turn indicated that submicrosecond transients were involved.

II. Electrostatic Analysis and Tests

To determine the susceptibility of the guidance system, tests were performed by generating discharges near the complete subsystem. The energy required to create computer errors was discovered to be very small. Only 500–600 ergs were required. Yet, ordnance is typically safe at over 40,000 ergs. It appears that *all* digital systems, encoders, and recorders are equally susceptible to submicrosecond discharges of exceedingly low energy content. This information led us to suspect an electrostatic discharge, since electrostatic discharges typically occur in submicrosecond intervals, do not recur at short intervals, and further, usually involve small energy contents.

The possible sources of electrostatic discharges were investigated. One of the first possibilities involved the payload fairing, which was metal coated with ablative material. It was conjectured that atmospheric ice crystals or dust may have charged the payload fairing with respect to the booster or, at least, charged the coating with respect to the base metal underneath. It was necessary to test the coating since almost no literature was available. Figure 1 shows the test setup. At each altitude of interest, the voltage was raised until the power supply was tripped by a flashover, or "punch through," of the coating. A camera was used to record any flashovers that might be observed with the eye in the darkened chamber. It was found that flashovers were obtained at the altitudes indicated in Table 1. These results seemed to show that a definite problem did exist and that the insulation material (lacquer) covering the ablative coating must be made conductive. Suspecting that the characteristics of these materials might change with temperature, it was decided to repeat the tests with larger test samples and to perform the tests with the coating heated to the temperatures recorded in flight at the times of the guidance anomalies. These tests showed that above temperatures of 140°F it was not possible to generate an electrostatic discharge. This was found to be due to the change in conductivity of the lacquer coating; i.e., as temperature increased, the conductivity of the lacquer also increased, thus leaking any charge to ground.

The next major suspected source of electrostatic discharge was the liquid cooling system associated with the guidance system. It was necessary to establish whether the liquid coolant had any electrostatic charging tendency. Charging tendency is defined as the charge density generated in a liquid when it flows through a capillary under standardized conditions and is expressed in microcoulombs per cubic meter ($\mu C/m^3$). This test technique was developed by the Royal Dutch/Shell Research and Development Department (Ref. 1). The apparatus (Fig. 2) consists of a metal reservoir, a 500-mm metal capillary with a 3-mm bore, and a metal receiving vessel isolated from earth ground by 10^{13} Ω or greater. The metal reservoir and capillary are connected to earth ground. When a liquid is passed through the capillary, a separation of charges takes place. The liquid running into the receiving vessel will become positively or negatively

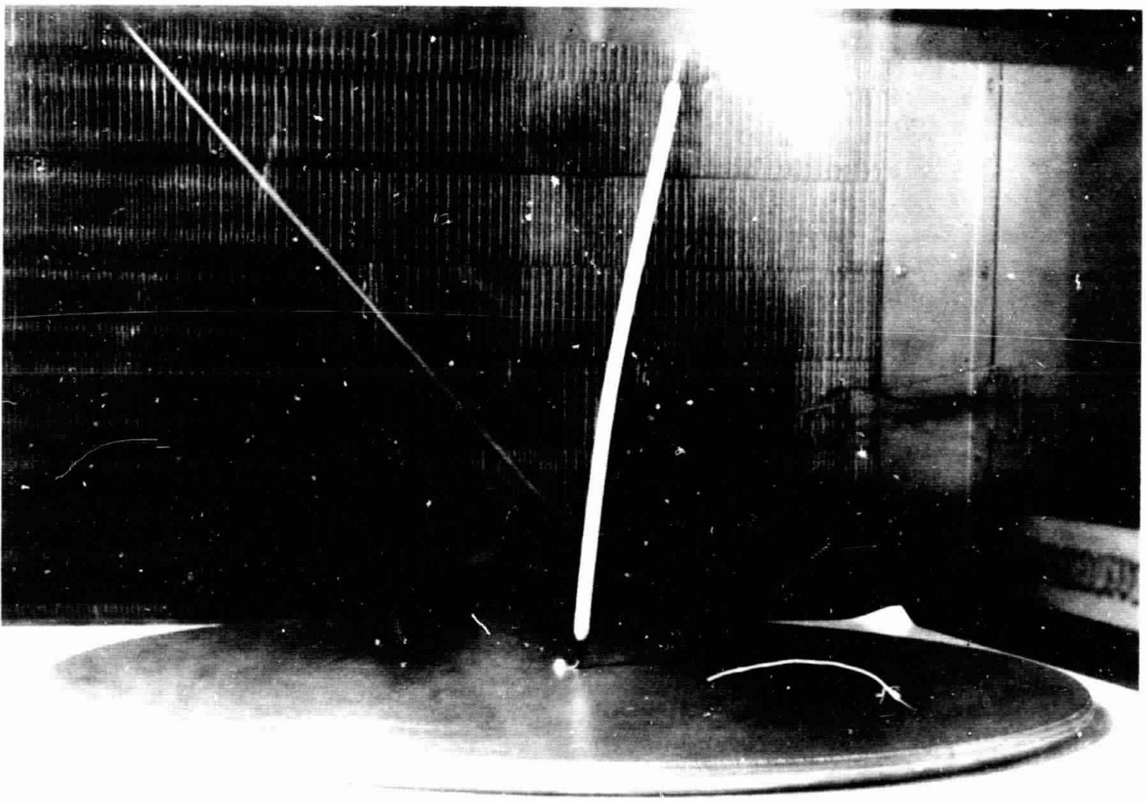

Fig. 1. Arrangement of electrostatic testing of coated panels

Table 1. Panel test results

Altitude, ft	Edge distance, in.	Flashover voltage, kV[a]	
		Panel 1[b]	Panel 501[c]
60,000	2	1.2	4.9
	6	3.0	5.2
	10	5.2	5.2
80,000	6	—	2.9
100,000	2	0.95	1.3
	6	1.6	1.6
	10	1.5	1.5

[a] Flashover voltage is independent of edge distance on panel 501 at 60,000 and 100,000 ft, as well as on panel 1 at 100,000 ft.

[b] 0.025-in. Thermolag and lacquer on aluminum 2 × 2 ft.

[c] 0.005-in. Thermolag and lacquer on aluminum 2 × 2 ft.

charged with the opposite charges flowing from the capillary to earth. The electrostatic voltmeter is connected from the receiving vessel to earth ground and is shunted by a capacitance, C, of predetermined value. Several runs are suggested, after which the charging voltage, V, is averaged.

The charging tendency, C_T, is then calculated from:

$$C_T = V \times C \times 10^{-3} \quad \mu\text{C/m}^3$$

where

C_T = charging tendency in μC/m^3

V = average electrostatic voltage in volts

C = capacitance of receiving vessel plus any added capacitance in pF.

Figure 3 shows the charging tendency obtained on several runs. As will be noted, this particular liquid has a charging tendency of about 3–4 μC/m^3, which indicates that this liquid could cause the transfer system to develop a charge if any of the components failed to provide a leakage path to ground.

The hardware comprising the coolant system was reviewed. The primary wetted parts are Teflon-lined hoses, anodized fittings of the AN type and heat exchanger plates within the computer. It was postulated that electrostatic charging currents would be safely conducted to ground if all metal parts in the system provided less than 10^9 Ω resistance to ground. A simple resistance check was made on three completed systems. All lines were found to have a resistance to ground of less than one Ω, except in one case. This flex line was found to have a high resistance to ground. Further examination showed that this high resistance was provided by the anodized coating on the AN fittings, i.e., the low resistance found on other lines was not there by design, but simply because the anodized coating was scratched off the parts during installation. Thus, the possibility of having a "floated" flex hose had been established even though the probability did not appear to be high. Work was continued to determine what type voltages could be generated by the system in the event a flex hose was not grounded. A simple laboratory test was conducted to determine the electrostatic voltages that could be generated.

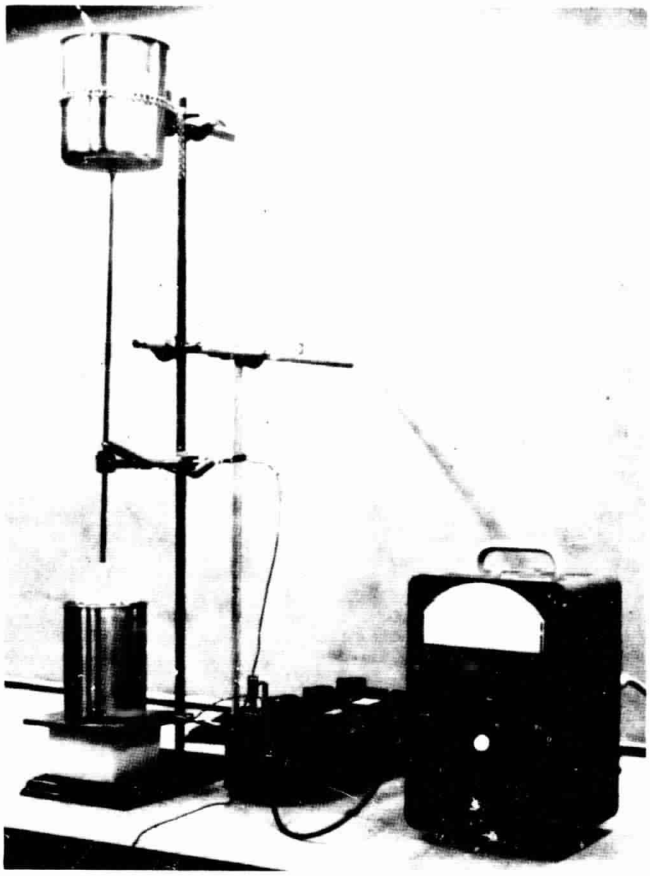

Fig. 2. Charging tendency apparatus

A ground coolant pumping unit was attached to a flex hose loop with a segment of braid floated. In the test setup (Fig. 4), the coolant was circulated at the system flow rates of 0.7 to 1.6 gal/min and the electrostatic voltage on the braid was measured vs time. An electrostatic voltage of −3000 V was obtained in a period of 106 min

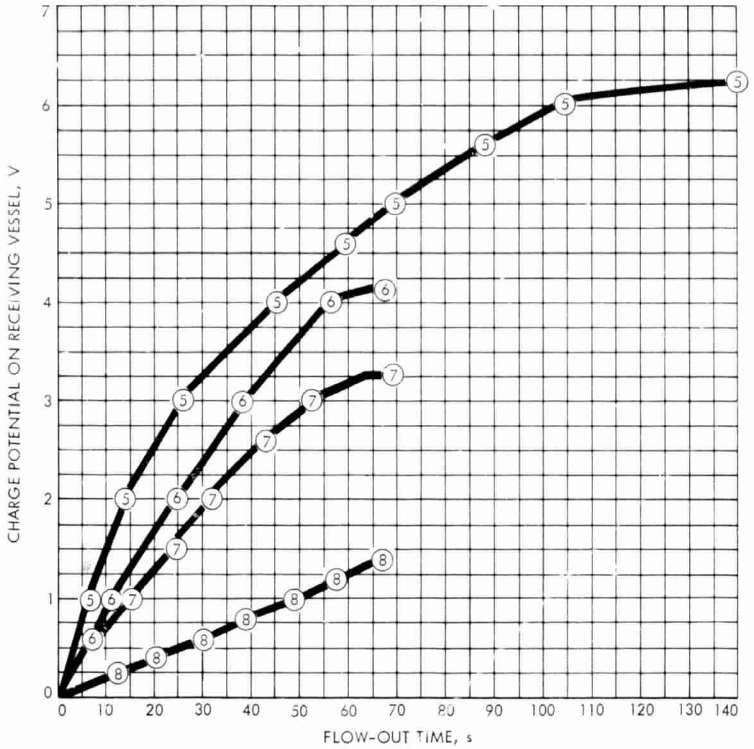

Fig. 3. Charging potential vs flow-out time for test runs 5 through 8, one liter of "fresh" FC-75 fluid

(see Fig. 5). This was sufficient data to indicate that a breakdown could and would occur at upper altitudes.

III. Conclusions

The following observations are offered:

(1) Digital systems have been found to be very susceptible to an electrostatic discharge.

(2) High electrostatic voltages can be generated by certain liquids while moving through ungrounded tubes or pipes.

(3) Insulating coatings or materials may become triboelectrically charged when used on the exterior of spacecraft.

In retrospect, the electrostatic problems that we have discussed and those experienced by such programs as *OSO*, *Scout*, *Minuteman*, and others, serve to point out the need for some down-to-earth control of electrostatics by EMC specifications. In considering what changes must be made in these specifications, we must first agree on the parameter that must be controlled.

A study of various electrostatic phenomena will show that both an insulating material and a charging mechanism are always involved. The charging mechanism involves motion of particles, liquids, gases, or in some instances the insulating material itself. The motion or dynamic situation can seldom be changed or modified enough to eliminate the charging mechanism. For example, liquids must slosh or circulate; payload fairings must be moved through the atmosphere; payload covers must be removed for access; and rocket engine exhaust gases must exit. These and many other dynamic situations are potential electrostatic charging mechanisms which will allow little, if any, modification. Therefore, there is only one factor that can be controlled to any degree: that factor is the resistivity of the materials exposed to these charging mechanisms. If conductive materials were always used, no electrostatic charge could be developed, and a situation that could be called electrostatic compatibility (ESC) would exist.

It is proposed, therefore, that EMC specifications be amended to control usage of insulating materials and finishes. The use of materials or finishes having a resistivity less than 10^{9} Ω-cm will not pose a problem and can be ignored. Only those having a resistivity of 10^{9} Ω-cm or

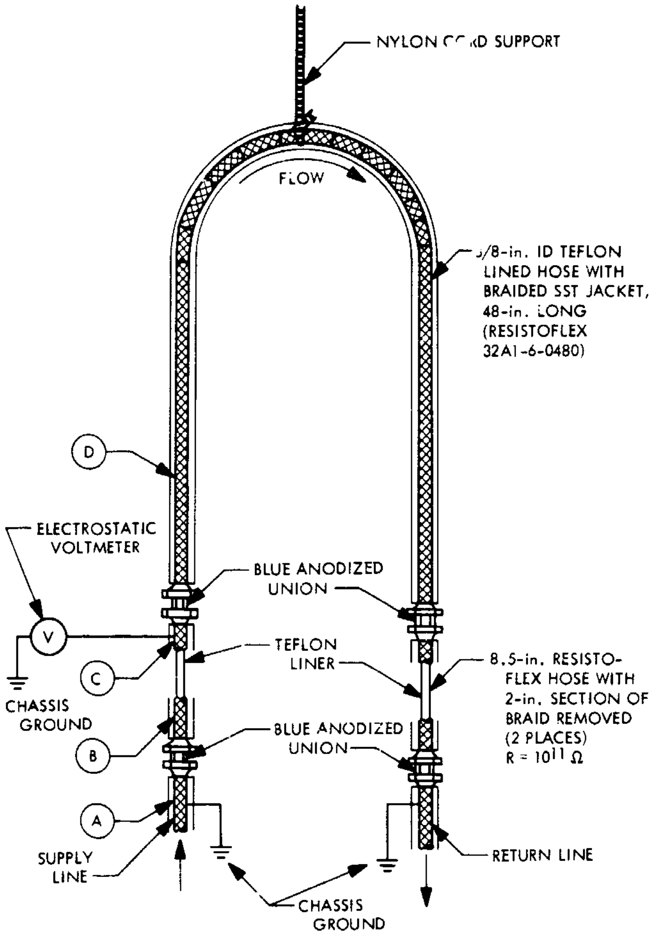

Fig. 4. Arrangement for measuring charge potential under continuous flow conditions

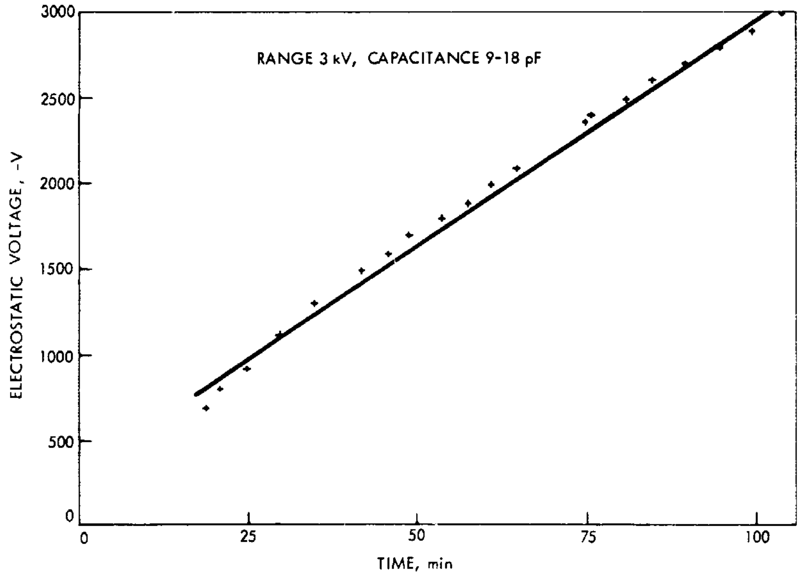

Fig. 5. Electrostatic voltage on the braid vs time

greater need to be examined further. All subsystems should be examined in this fashion. As each material or finish having a resistivity greater than 10^9 Ω-cm is identified, an analysis must be made to determine if the material is exposed to a dynamic situation that could produce an electrostatic charge. By proceeding through the system in this fashion, those insulating materials or finishes that could produce an electrostatic discharge will be pointed out. Those materials that are found to have a high resistivity and could produce an electrostatic discharge must be changed to one having a lower resistivity; alternatively, the design should be modified so that a discharge path is provided.

In many cases, the analysis will result in material or finish usages for which the resistivity is not readily available. The liquid coolant mentioned earlier was just such a case. Determination of the charging tendency of these materials must be made using simulated charging conditions. Tests, such as the payload fairing coating temperature-altitude and the liquid charging tendency, may be necessary. The EMC specification must include a requirement to demonstrate that no electrostatic charging problem will exist when materials having unknown or high resistivities are employed in a situation involving an electrostatic charging mechanism.

In summary, we submit three points:

(1) Digital systems are extremely sensitive to electrostatic discharges.

(2) Insulating materials must be controlled to eliminate electrostatic problems on spacecraft with digital equipment.

(3) EMC specifications should be amended to control usage of all insulating materials and finishes on spacecraft.

Discussion

Robert G. Peltzer: I would like to make a couple of comments that might be pertinent here. In the first place, I think your ideas are very good on this, and I think you can probably achieve good control of what you are after. However, if you are flying a spacecraft with experiments on board, you have another problem. A lot of the particle types will be generating very high voltages which are subject to discharges. I have seen experiments that ran up to about 20,000-kV square waves on some of their grids. You can get corona problems very easily if some package in the system happens to blow out, outgas, and increase the pressure considerably up to the flashpoint. I do not think that you can relax your specifications on the equipment itself that could burn out in this instance. You still have to watch that because you are going to have these experiments flying on some of these spacecraft.

N69-25[illegible]45

The Concept of Single-Point Grounding

Henry M. Hoffart
General Electric Company
Valley Forge Space Technology Laboratories
King of Prussia, Pa. 19406

I. Introduction

Grounding is one of the most critical and generally the most misunderstood interference control requirement for the design engineer, and in some instances, even for the electromagnetic interference control engineer. The term "ground" indicates a connection to earth, which in the case of spaceborne spacecraft, would be an impossible condition. Therefore, the term "ground" for airborne and spaceborne vehicles denotes a common reference point to which all the electrical and electronic equipment contained within the vehicle are referenced. Thus, the single-point grounding concept was developed and specified in numerous documents.

Almost every electromagnetic compatibility specification written specifically for spaceborne vehicles specifies that a single-point grounding concept must be used. In some specifications, single-point grounding is identified as the structure ground point (SGP), wherein ground leads are limited in length to less than 6 ft. The single-point grounding philosophy is often specified for the supporting ground-based equipment in an attempt to minimize potential differences between the spacecraft itself and its ground support equipment.

Frequently, in order to minimize radiation, multiple-ground radio frequency circuits have been found to be necessary. Thus, the single-point grounding concept has been circumvented. An electronic system consists of innumerable discrete units located in a confined area with spacing of several yards between some units. To form a system, these discrete units interface electrically, thus creating a problem as to how to effectively implement the single-point grounding concept. The parameters employed in analyzing and designing an effective grounding concept for any electrical and/or electronic system are a function of the equipment spectrum usage, location of all units, and interface criteria, which include power and single distribution when ground based and spaceborne. The grounding concept must be designed on a system level rather than on an individual equipment basis because of interface requirements. Effective grounding is not difficult to achieve if properly approached within the engineering discipline of electromagnetic compatibility.

The single-point grounding concept is shown to exhibit advantages if effectively implemented. However, the single-point grounding concept will revert to multiple referencing to ground as frequency increases. The transition frequencies will be a function of system configuration and grounding conductor configuration.

II. Grounding

To the uninitiated, the usual idea of handling unwanted electric and electromagnetic energy is to conduct it to earth. This is the approach the electrical power industry undertakes to provide for personnel hazard protection when dissipating power fault, lightning stroke, and magnetic storm currents. During the early part of the 20th century, wireless equipment and radios required a connection to earth. When such equipment was placed on ocean-going vessels and the early biplanes, it was soon determined that a connection to earth was not entirely necessary. At sea, the ocean waters, which contain many conductive salts, provided the conductive medium to dissipate electric and electromagnetic energy from the ship's hull. In aircraft, this energy is dissipated into the atmosphere by the static dischargers located at the trailing edge of the wings. These dischargers contain many fine points to prevent impulsive discharging into the atmosphere. To permit reasonable reception, the early battery-operated radios required a connection to earth in addition to an extensive antenna. Until recently, making a connection to earth was thought to consist essentially of inserting a conducting material or a ground electrode, such as a rod, into the earth just below terrain level. It was the electrical power engineers who first attempted to apply engineering principles to grounding. Their interests were in effectively dissipating large currents safely into the earth, thus reducing personnel hazard conditions. It is only very recently that attention is being given to the natural and man-induced perturbations into earth and their effect on grounding system effectiveness (Refs. 1 and 2).

The intended environment for a spacecraft is space. However, when the vehicle is being assembled and tested at the contractor's facilities, and when the vehicle is on the launch pad prior to lift-off, a connection to earth is made to protect personnel from hazard. Though the subject vehicle may have been designed to effect compliance with the single-point grounding concept, the earth ground characteristics and the grounding system for the vehicle and its associated ground support equipment will alter and, in a great many instances, degrade the vehicle electronic equipment performance.

Because of the concentration of electronic equipment, including high-powered radar and communications transmitters at several launch centers, such as Cape Kennedy, Vandenburg, and Wallops Island, above-surface connections to the ground systems in the earth act as antennas and divert some of the radiating electromagnetic energy into the earth. These induced currents increase the corrosion rate of the ground electrodes, which in turn, due to the formation of semiconductor oxide layers, further increase current flow into the earth, ultimately destroying the ground electrodes. This effect can be observed in many of the urban areas, where tall office buildings built of metal girders, steel reinforcing rods, plumbing, light and power systems, all act as antennas that detect the energy of local broadcast and commercial communications transmitters, and conduct the resulting currents to earth. When you add to this the peaks of energy contributed by magnetic storms conducted into the earth, the effects are evidenced by the increasing frequency of power failures in underground power distribution systems. The transient currents thus induced into the soil cause large transients in the underground power distribution system, resulting in cable and circuit breaker rupture.

Soil structures contain conductive and insulating particles, with distribution varying with distance and depth. For a ground electrode to make an electrical contact to earth, a conducting medium must be present to reduce the resistance introduced by the insulating particles. Such a medium is present in most soil structures, being an electrolyte comprised of the salts present in the soil, and with the moisture or water table, forming electrolytic cells. Because of the variation in soil structures, the electrolytic cells are generally isolated from each other. When a safety ground system is installed, using multiple ground electrodes, connections are made to multiple electrolytic cells (Refs. 3 and 4). Because of the variation in salts and salt content, in addition to the variation in moisture content, each electrolytic cell will display potential variations relative to each other. Thus, the grounding system interconnecting across numerous electrolytic cells initiates a constantly changing current flow in the soil. Depending on the activity of the chemical electrolyte, measurements at distances in excess of 1200 ft from the safety ground system can detect the noise potentials when the safety ground electrodes are interconnected. In most cases, these currents prohibit the referencing of electronic equipment to the safety ground system.

Other electrochemical activities occur in the soil. Soils possessing sulphide and graphite minerals will generate currents in the earth, called spontaneous polarization, and appear as an additional source of noise. Underground water streams generate streaming potentials. A negative potential is left behind with the moving water carrying a positive potential. Other natural phenomena include the potentials induced into the earth from lightning and magnetic storms, in which these potentials, traveling at a rate of ⅓ the speed of light, will discharge into grounding systems. With the reactive components of the interconnecting wires, these potentials cause the ground system to break into transient oscillation. The oscillating ground system will, in turn, induce additional perturbations into the soil and the referenced electronic equipment. Telluric currents, caused in most part by sunspot activity and solar flares, will also induce noise potentials into a ground system. Man has also introduced perturbations into the soil by installing metallic objects, such as gas mains, water mains, and overhead high-tension lines, which induce currents into the sulphides present in the soil structure.

Thus, in spite of the mass of earth's mantle, the multiple-electrode safety ground system is unsatisfactory for instrumentation grounding purposes. The concept of single-point grounding can therefore be used to provide a low-noise connection to earth. A low-noise or quiet ground system is specified in a NASA grounding specification (Ref. 5). The radial ground system (Fig. 1), when installed at the contractor's plant so as to provide a single-point ground reference to earth, as a quiet ground will provide the ground reference for the space vehicle and for the associated ground support equipment. When the space vehicle is remotely located from the ground support equipment, individual radial ground systems provide the quiet ground reference for the vehicle and the ground support equipment, with circuitry isolation being provided between the interfacing remote locations.

III. Single-Point Grounding

Similar ground noise conditions exist in a spacecraft when the on-board electronic equipment is multiple referenced to the vehicle. When noise currents disturb and alter the performance of the referenced electronic equipment, the problem is attributed to "ground loops." Though "ground loops" is an erroneous term, it has become a part of our vocabulary. An analysis of this phenomenon clearly shows that "ground loops" are in reality current loops in the conductive material serving as the ground plane. These current loops are due to mutual inductance coupling from current carrying cables placed in close proximity to the ground plane, which can be the frame and skin of the space vehicle (a practice followed to provide shielding of one side of the cables by the vehicle skin), or can be due to impinging radiated energy or the moving charges on a spacecraft skin while in flight. Impinging radiated energy on the vehicle skin will also create additional current loops, particularly if oxide layers have formed on the skin or frame material, which frequently is aluminum, magnesium, or other lightweight metals that oxidize very readily.

When an electronic unit is to be referenced to a ground plane (Fig. 2), the conductor or connecting wire between the unit to be ground referenced and the ground plane will exhibit a series impedance, which consists of $R_{dc} + R_{ac} + J\omega L$. The series inductance of the connecting wire in parallel with the distributed capacitance between the unit and the case will resonate at some frequency. Below the resonant frequency, the impedance will be approximately equal to R_{dc} up to a frequency between $f_r/2$ and $f_r/10$ (f_r = resonant frequency). The

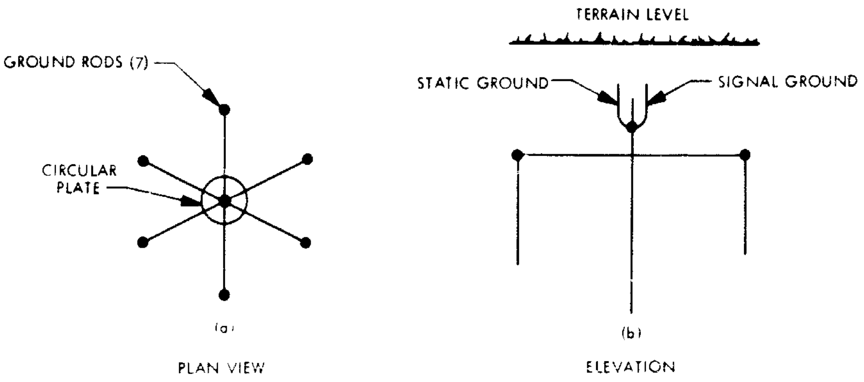

Fig. 1. Radial ground-quiet ground: (a) top view, (b) side view

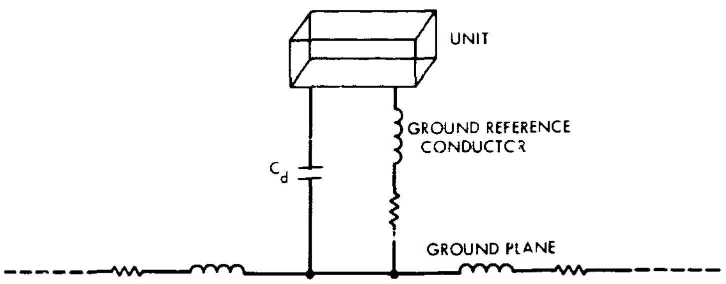

Fig. 2. Grounding criteria

frequency below resonance, at which impedance will begin to rise, will be a function of the "Q" of the grounding circuit. In grounding, therefore, the resonant frequency should be designed to be between an octave to a decade higher than the highest frequency components to be processed by the unit being referred to the ground plane.

It is seldom that a spacecraft or its associated ground support equipment contains a single unit. Instead, two or more units will constitute the electronic system on board the spacecraft or in the GSE equipment. Figure 3 illustrates the conditions existing when units comprising a system are referenced individually to the nearest point on the vehicle. The generator E_n is the eddy current loop in the vehicle skin in series with the skin impedance. The series resistance of the skin combines the dc and ac resistances (with the ac resistance being variable with frequency), in addition to a transient resistance. The transient resistance is an instantaneous increase in resistance which occurs with a rapid change in induced currents into the skin. When the interfacing units have common signal and static referencing, the generator component of the skin appears as an additive signal, and if the noise signal component is of sufficient amplitude, then system performance is degraded or altered to a higher error bit rate.

The standard practice that has been followed in space vehicle design to comply with the single-point grounding specification requirements is illustrated in Fig. 4. Though each unit interfaces, the varying lengths of the ground reference conductors with their associated reactive components will, due to electrical operation of each unit, introduce noise voltages into the individual units comprising the system. In addition, the distributed capacitance between each unit and the vehicle frame and skin will also add noise potentials. The unit farthest from the vehicle single-point ground, with the specified length of the ground reference conductor limited to six ft, will resonate at the lowest frequency and act as a radiator of the signals being processed by the particular unit.

An improvement can be made (Fig. 5), if a conductor serving as a ground plane is used to electrically reference all units to the vehicle single-point ground. This single-point grounding concept places each unit at a

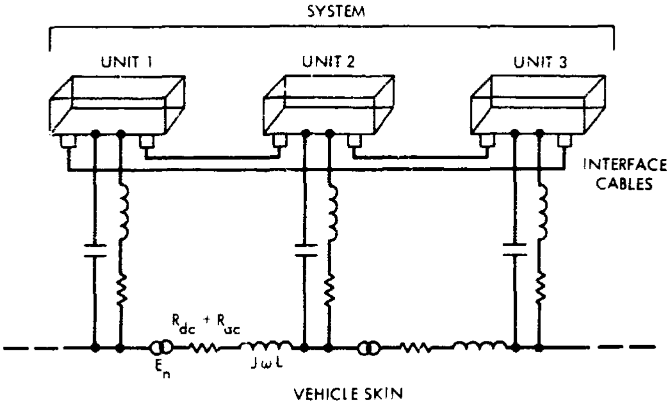

Fig. 3. Multiple grounding to vehicle skin

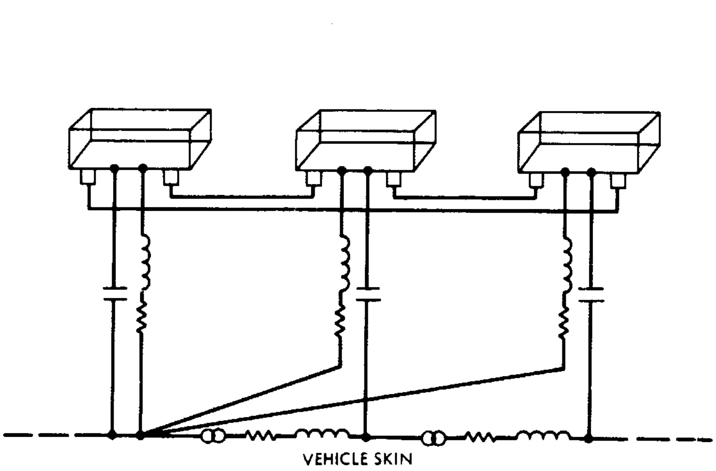

Fig. 4. Standard single-point grounding

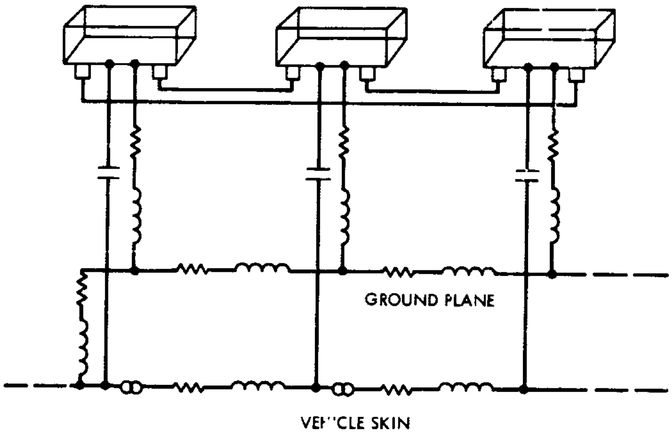

Fig. 5. Improved single-point grounding

smaller potential difference, thus reducing possible EMI perturbations. However, due to reactive losses in the ground plane wiring, this concept is marginal for digital signal format equipment.

Figure 6 illustrates the single-point grounding concept used in the latest series of vehicles. The separation of the static and signal ground planes isolates the signal circuitry from the unit enclosures and reduces the total distributed capacitance by series isolation. Thus, the capacitive coupling coefficient is reduced with a consequent reduction in noise. Nevertheless, as frequency increases, even this system becomes a multiple-ground reference system due to capacitive reactances.

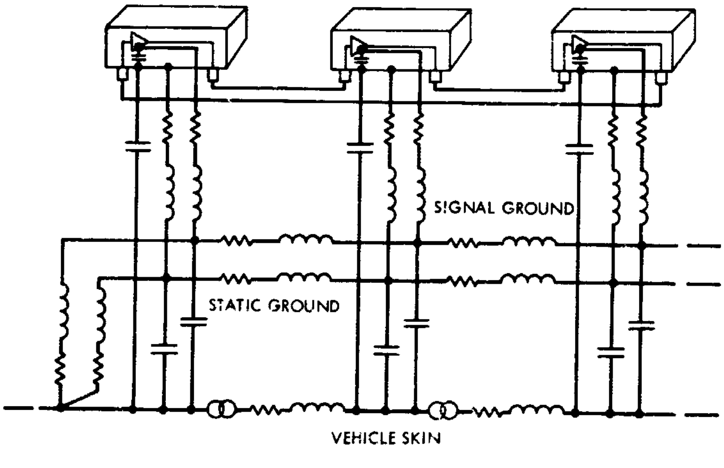

Fig. 6. Optimum single-point grounding

IV. Conductor Configuration

Because wires and conductors display series reactance and impedance variable with frequency, the choice of conductors used for the ground planes becomes critical, especially if the units of the system process high frequency communication signals or fast rise time digital data. Of the various configurations of conductors available, the unilay or concentric-lay stranded conductor has the most rapid increase in series reactance and impedance with an increase in frequency. If the flexibility of the stranded conductor is necessary, then litz wire can effectively replace standard stranded conductors. Litz wire, due to the interweaving of the insulated strands, will display a low impedance characteristic up to the low MHz area of the frequency spectrum.

Rectangular or flat conductors can be used as the equipotential ground planes, provided proximity effects are equal at both edges. Implementation of equal proximity effects for flat conductors is difficult to achieve in either spacecraft or ground support equipment. Unequal proximity effects will alter the phase displacement of the current paths, allowing the flat conductors to function as stub antennas to detect radiation fields or to radiate the current changes in the flat conductor. Because of the increasing separation of currents as frequency is increased due to skin effect, the R_{ac} component increases very rapidly, and the added mutual inductance increases the series self-inductance of the flat conductor.

The solid round conductor, available commercially in sizes up to No. 6AWG, displays less rapid change in series impedance with frequency than the previously mentioned conductor configurations. The optimum conductor configuration is the tubular conductor. Longitudinally, the tube looks like a shorted turn; thus, the conductor displays a series inductance that is inversely proportional to frequency. As the wall thickness is reduced, the R_{ac}:R_{dc} ratio is reduced as well, introducing the additional advantage of reducing the weight of the conductor. Copper tubes are used for ground planes in the new generation of spacecraft now being designed and built. The transmission line concept of the twin tubular buses will further reduce the propagation of noise voltages in the signal and static ground planes. Increasingly, commercially available electronic equipment is being designed with circuitry isolated from the equipment case to enable separate ground referencing. This grounding concept was used for the NASA–ACE–S/C acceptance checkout equipment used in the *Apollo* program (Ref. 6). The 12 systems located in 4 areas have had no significant EMI problems to date.

In a recent spacecraft design, where the electronics system processes analog signal levels in the low μV range, the vehicle ground point is remotely located from the electronics subsystem (see Fig. 7). To comply with the single-point grounding specification requirement and to use the tubular ground distribution system, concentric tubular conductors were used. The wall thickness of the inner and outer copper tubes could be reduced while maintaining sufficient mechanical rigidity and simultaneously reducing weight to a minimum. The outer tube was used as the static ground plane and the inner tube as the signal ground plane, both terminating at the vehicle ground point via a disk. The dielectric between the inner tube and the outer tube is primarily air, with support to the inner tube being provided by an edge wound plastic. At the subsystem end, litz wire was used to separately reference the signal and static grounds. Within the subsystem, small diameter thin-walled twin parallel copper tubes distributed the equal potential signal and static ground reference.

With the increasing use of microminiature circuitry, the effectivity and the series impedance of the ground plane is increasing in importance. The effectiveness of Faraday electrostatic shields to reduce radiation and capacitive coupling between integrated circuit modules depends on the low-impedance connection and the characteristics of the ground distribution system. This is particularly true for manned vehicles, since astronaut personnel hazards have to be minimized by reducing potential gradients.

V. Quiet Ground Noise

It should be no surprise that most so-called quiet grounds that connect to a building safety ground or to a remotely located single-ground electrode have almost as much noise current as the building ground. One installation has a single-ground electrode in the earth, connected via a 400-ft-long No. 2/0 stranded conductor cable to a rectangular copper plate. The vehicle undergoing test is referenced to the quiet ground plate via a smaller diameter stranded conductor. The various subsystems comprising the electronics on board the spacecraft showed degraded performance characteristics. Using standard radio interference-field intensity receivers and spectrum analyzers, current probes and antennas, it was found that local broadcast station signals appeared on

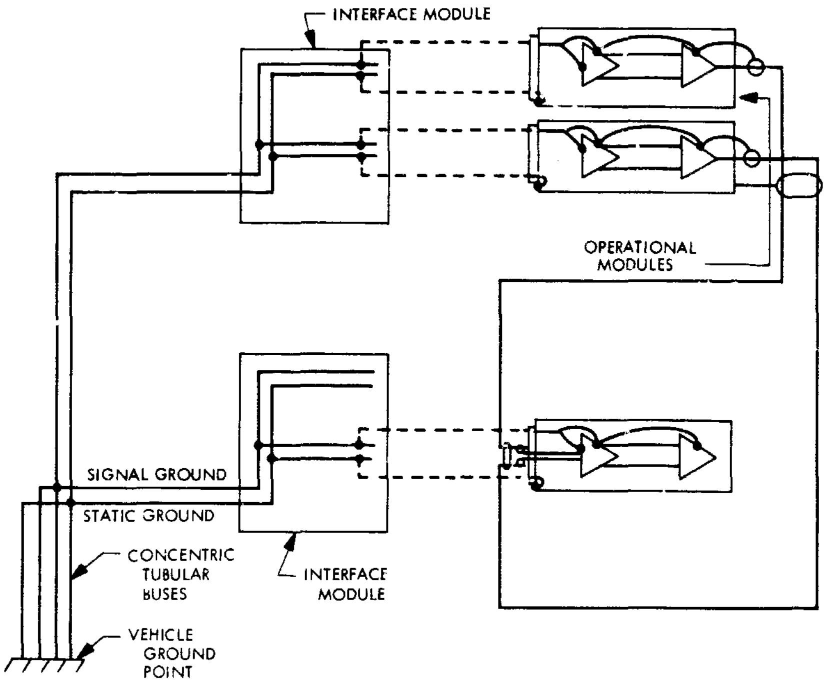

Fig. 7. Ground tree, static/signal ground distribution

the quiet ground. At best, the quiet ground was only 35 dB better than the building safety ground at about 180 Hz. At the higher frequencies, i.e., above one MHz, the quiet ground system noise approached or exceeded the building safety ground noise levels. The noise figures were approximately 80 dB above one μA, rms. The high series impedance exhibited by the ground cables at these frequencies and the length of the cables contributed to the high level of noise components. Revision of the quiet grounding system by replacing the stranded conductors with copper tubing would significantly reduce the noise figures. A nearby small diameter copper water pipe, though multiple referenced to the building metal framework, was decidedly quieter than the quiet ground, being some 40 to 50 dB lower.

VI. Conclusion

The very recent change in the National Electrical Code, reducing leakage and reactive ground currents for electrical and electronic equipment from 0.005 to 0.0005 A, will, in new equipment, reduce currents in the soil and reduce personnel hazard potentials. Interference reduction filter networks will now have to be designed with by-pass capacitors connected from line to line instead of line to ground. Adaptation of line-to-line bypassing for the 400-Hz power lines in spacecraft will reduce circulating currents in the vehicle skin.

Single-point grounding is a useful and effective grounding concept in both spacecraft and associated ground support equipment, if it is effectively implemented. The concept and its use, which have been misused in the past, have created considerable consternation among design engineers (Ref. 7). Designing the grounding system on a system level, with grounding tree distribution, will improve the electromagnetic compatibility characteristics of electronic and electrical equipment, not only in the space program, but also in worldwide communications equipment and systems.

Discussion

Henry M. Hoffart: Because the experimenters are working at low frequencies and with very low amplitudes, the overall grounding system plan can take the experimenter's requirements into consideration. For example, if the experiment is located on a boom of the vehicle, you can run copper tube out to the end of that boom and reference the equipment to that copper tube. Run the wiring inside the copper tube and then there will be a ground reference back to the vehicle single-point ground. The spacecraft will be grounded and mounted on a booster. The booster will have its own single-point ground and the space vehicle will have its own vehicle ground point. In this case, for any interface that exists between the spacecraft and the booster vehicle, both ac and dc isolation must be provided. Isolation of ac will be provided by transformers and dc isolation by a dc supply actuating a relay on command and then either the booster or the space vehicle provides its own dc source.

When you have the vehicle mounted on its launch pad and the ground support equipment is located in the blockhouse or another building, or when the GSE is occasionally located in two or three different areas that are remote from each other, then each equipment has its own instrumentation, radial type ground, individually referencing that equipment to earth. Again there is ac and dc isolation between the various GSE system components that are remotely located. By this means, you can comply with the requirements of the single-point grounding concept and actually have an acceptable grounding system.

Edward R. Zinn: Would you repeat and amplify your last statement on how you employ the single-point ground concept when you have several pieces of GSE equipment?

Henry M. Hoffart: To give an example, at Cape Kennedy there are two GSE equipments that are remotely located from each other; one is at the MSO building, the other at LCC 39 and there is an interface between the two equipments. The distance apart is roughly 5 mi. So, the GSE equipment located in the MSO building is referenced to a radial ground in the earth and distributed out through the building to the equipment. At LCC 39, the equipment has its own radial type ground. The interface between the two equipments is via telephone lines with transformer isolation at each end between the two equipments. So, the grounds are completely isolated and it is completely a two-wire system.

Chet Hastings: We have applied a concept similar to what you are suggesting. From the EMI engineer's work in the beginning stages on equipment, we develop a concept where we implement an overall system drawing of the grounding. This constrains the design process so that the individual designers are forced to come up with the isolation transformers or whatever means are needed to comply with this grounding concept. But the problem comes up in that this costs money and it can always be challenged by design engineers when they can see an easier way to do it. So what has happened to me is that the credibility of the grounding analysis always comes under fire. I wondered if you had some good words on how to overcome that problem.

Henry M. Hoffart: I had that problem initially when I came up with this concept for NASA. I finally convinced them and so now, when any questions come up, I simply point to the equipment that has been built, installed, and used. You cannot argue with success. Actually, the important thing to discuss with design engineers and for them to consider is that any type of wire itself represents a discrete component. In other words, a capacitor has capacitance and we normally treat it as a capacitor, but we also have to recognize the fact that a capacitor has resistance and inductance. A retard coil or an inductor has capacitance and resistance and so on. Well, a wire also has resistance, inductance, and capacitance. If I explain it that way to a design engineer and also explain to him that a ground system, whether it is connected to earth or otherwise (because it isn't always necessary to make the connection to earth in all cases) simply provides a zero potential reference to the equipment, so that all parts of the system can float up and down together when it is tied together as a system. I do not care how much they float as long as the items at opposite ends of the system are floating up and down together so that the relative potential between the two is negligible.

Chet Hastings: I think the point is that there needs to be a more systematic way of applying and analyzing the grounding, so that the answers can be developed in terms that the designer will accept. There is always the matter of economics involved. The designer says, "Yes, that is a good system, but can we get by with a system that is not as good."

Henry M. Hoffart: I agree. The economics involved in that are this. Assume that they are using tubular buses and the twin tubular buses are more expensive initially, but the net result in the long run is that the EMI problems will be far fewer. Economically, the initial cost will be higher but the long-term cost and the ability to deliver the vehicle or the equipment on time will not have suffered.

William R. Johnson: We have been studying grounding from an analytical and an operational standpoint at TRW for some time now. We have about reached the conclusion that a single-point ground system will work if you do the proper things, or a multiple-ground system will work if you do the proper things. Unfortunately, it seems that no one does the proper things to either system. One of the biggest fallacies that we found in single-point grounding is this concept of actually having one single point on the ground plane system. When you have separation over an earth that has fairly high resistivity, and the earth does appear primarily resistive, then you have to maintain a physical single point because a common resistance current flow in a ground plane will actually cause different potentials to exist. When you try to extrapolate this same technique into a spacecraft system where you have a ground plane, although perhaps mediocre in some cases, you carry with you disadvantages, the primary one being that you have to carry wires from each individual system or subsystem back to this single point or mecca that they generally refer to as a vehicle ground point.

Typically, we do not carry each individual circuit back because the amount of wiring would probably create the need for larger boosters. So, we bunch them all together and carry them back. Basically, we get unity mutual coupling then between these individual circuits because of common impedances, both the resistive portion and the mutual inductive portion. If you carry them back separately but they are all in fairly close proximity, you lose the mutual resistive component of coupling, but you still retain a fairly [illegible] sized mutual inductance.

Now, if you have a ground plane that is modestly good, you have a situation similar to that on which Boeing did some work a couple of years ago on mutual inductive coupling for aircraft structures. They found that the resistive components of the current that flow in the ground plane tend to bunch up under the wires at very low frequencies. This means that at some distance away, if you set another circuit down, you really don't see the potential lines in the ground plane as though the current were flowing homogeneously to the ground. They found that in two circuits, both referenced to ground at each end, the mutual inductive coupling would take over in a region of 400 or 500 Hz for an aluminum structure. The problem then is one of mutual inductive or mutual capacitive coupling.

Discussion (contd)

At the low frequency region, at modest currents, we generally have mutual inductive coupling. Therefore, carrying the wires back to this central ground point creates an additional area of wiring over which the mutual inductive coupling is very good. If we use the technique of grounding the individual circuit to the ground plane at some point on the ground plane, and ground the second circuit at some point close to its terminus rather than carry it back to the same point that the first one was grounded, we can eliminate or at least reduce the mutual inductive coupling. The only problem we have then is mutual resistance, which would tend to put the ground plane at these two different points at different potentials. This is overcome again by the fact that the mutual resistive currents or the resistive components of the current tend to flow near the circuits at fairly low frequencies. So we really strap ourselves carrying all this extra wire around and we strap ourselves further by actually creating paths just to implement a philosophy. I frankly do not think this philosophy has ever been looked into in enough detail analytically to really determine that it is justifiable.

Henry M. Hoffart: I feel that it is justifiable if it is approached intelligently. I think the big problem is the fact that the term is misconstrued. Perhaps we ought to change the term to a single-point grounding concept. Everybody feels as though all you do is make one connection to the spacecraft regardless of the length of the leads. This is the big problem. Then you end up as you have stated, with a large group of leads which have resistive and mutual coupling components involved. I believe that the term itself has evolved into an erroneous connotation. Perhaps we ought to change the term. Actually the single-point grounding concept is a good one if it is effectively implemented. You still end up with multiple-point grounding because as you go higher in frequency, due to capacitive reactance, you are going to be multiple grounded anyway. So you only have a single-point grounding concept at the very low frequency end of the spectrum.

William R. Johnson: This is quite true, and I wonder why we try to extend it then into regions of frequency where it has distinct disadvantages. In the 60-Hz environment, in checkout, and such things as this, there are inherent advantages in single-point grounded balanced circuits, but we run into great disadvantages very quickly, at least in the spacecraft field. Trying to implement either philosophy parochially, gets us into a lot of trouble *OGO* is an example of one where we used the hybrid grounding system. Experiments that were sensitive to magnetic fields obviously could not tolerate currents flowing on shields that were induced down in the spacecraft area. They could not tolerate single-wire circuits which used the ground as a return path because of the magnetic moment. So, those circuits were left floating at the boom ends. The electrostatic experiments, such as Bob Peltzer's, required no E fields. They could tolerate magnetic fields, so everything got grounded in many places. I think the grounding has got to consider the circuit needs, and not just follow a philosophy.

G. L. Miller: I have some reservation about this whole scheme that you have outlined which I think I could make clearer by referring to your Fig. 6. Now, in that scheme we see that the signal grounds are hooked into the lowest points of the triangles, which are intended to be amplifiers inside each box. The amplifier ground is referred to the line that you have called signal ground. The case, however, is referred through capacitive coupling to what you call vehicle skin. That means that the case is moving with respect to the signal ground. That means that if there is capacitive coupling as you have drawn it between the amplifier input and the case, which there will be, that signal enters directly into the amplifier.

Henry M. Hoffart: Correct, but normally what will happen because of the dimensions of the case? The value of capacity between amplifier and case is normally larger than from case-to-vehicle skin value. The total area in one case will only be one side of the case, the capacity between one side of the case and the vehicle skin, whereas in the other there is the entire case and the electronics, its associated capacitance, and also the wiring that would be internal to the case.

G. L. Miller: It seems to me that there is no size of it which is good news. Any size is bad news; the only size which is any good is zero.

Henry M. Hoffart: That's right. But we can't achieve zero; if we attempt to insulate, we simply increase the value of that capacitor.

G. L. Miller: No, the point is that you would not care what its value was if you referred the amplifier ground locally to the box, which is what we do. What you have done is to refer the amplifier ground to some external line which you are calling signal ground. It seems to me that this scheme is inherently noise sensitive. This is a scheme which, it seems to me, is one which tends to pick up noise rather than reject it. I think the scheme that you showed in your Fig. 7 works only because you are using a balanced system. As I understand Fig. 7, at the top you have a couple of boxes marked interface module. Those are single-ended amplifiers, the output of which is then taken, balanced, to a differential amplifier. That means that the noise signals, which I have just mentioned, enter by virtue of the very scheme you are using and are cancelled out due to the fact that you are taking differences. But, you would be even further ahead of the game if they never entered in the first place.

Henry M. Hoffart: Figures 6 and 7 actually show the same grounding concept.

G. L. Miller: Yes, I realize it is showing the same grounding concept and I am pointing out that I disagree with it.

George N. Burkhardt: I want to support Dr. Miller. The modification which I discussed about our PCM input drawer and which resolved the bit error scatter problem was done simply because this type of philosophy existed throughout the system. Noise was being coupled in via the floating electronic circuits, as opposed to the chassis circuits. We brought the PCM card itself right to the chassis ground point and provided an extremely low impedance over the frequency range of interest to the main central-point ground system. The central-point ground system that we use approaches this configuration; however, the mechanical configuration, which is equivalent to the schematic in Fig. 7, is simply a daisy chain from rack to rack to rack, as opposed to using the concept of an individual ground bus from each rack to a point, and then paralleling that with hard-line interfaces. The hard-line interfaces between the equipments have impedances an order of magnitude greater, so that they do not aid at all. Their long coaxial cables do not aid in broadening the ground plane; they look much more like antennas. I think, really, there is a big credibility gap. You have to have a good initial concept that you follow throughout the system, and the individual problems that always will occur regardless of the base line you establish for grounding, will have to be treated uniquely. The solution to that problem may or may not follow the general rule that you establish. The primary objective is to get those units and those signals to a point within the system, that represents the lowest possible impedance to a zero potential.

Robert O. Lewis: I like the single-point ground system, but only for one reason. It is easy to go from a single-point ground system to a multipoint ground system, but it is extremely difficult to go from a multipoint ground system to a single-point ground system.

Discussion (contd)

Robert F. Witters: I have two questions regarding your use of litz wire. First, what size litz; and second, since the advantages of litz pretty well disappear above 2 MHz, did you do something special?

Henry M. Hoffart: No. In most cases, when you need flexibility, we are fortunate in the fact that the equipment requirements do not exceed 2 MHz. I have used litz wire in sizes up to AWG No. 10. They are commercially available.

Robert F. Witters: How many strands?

Henry M. Hoffart: I have some No. 10 from Hudson Wire Co. for example, which has something like 320 strands to it.

R. C. Snare: You suggest the running of copper tube [illegible] craft to the end of the booms. Would you explain what [illegible] copper tubes you are talking about?

Henry M. Hoffart: It is very thin-walled copper tube. The smaller the wall thickness to diameter ratio, the more effective it is.

R. C. Snare: What size are we talking about?

Henry M. Hoffart: 1/4 or 3/16-in. diameter tubes.

R. C. Snare: There are three experiments on the *OGO-E* spacecraft on the end of an 18-ft boom with three joints in it. The signal ground and power ground for each experiment were separate. Are you talking about running six copper tubes out to the end of this boom and still have it unfold?

Henry M. Hoffart: No, why do the three experiments need to have three separate connections back to the vehicle ground point?

R. C. Snare: I just assumed your premise was that you had separate grounds all the way back to a common ground point.

Henry M. Hoffart: No, I have a grounding tree. I do not see any reason why the three experiments out at the end of the boom would have to use six conductors or even three conductors for that matter. Why could not the power and signal ground come back simply as a double conductor for all three experiments?

R. C. Snare: The other question I have is how do you get it around the joints in the folding boom?

Henry M. Hoffart: We had a condition similar to that and at the joint I would put in some litz wire as a jumper across that area.

References

1. Hoffart, H. M., *Instrumentation Grounding at NASA/KSC*. Paper 6-10.3, presented at the Thirteenth Southeastern Instrument Conference, Instrument Society of America, Cocoa Beach, Fla., Apr. 18–20, 1967.
2. Hoffart, H. M., "Instrument Grounding Keeps Space Signals Clean," *Instrumentation Technology Magazine*, pp. 41–44, Aug. 1967.
3. Hoffart, H. M., and Kloiber, F. W., *Electromagnetic Compatibility Principles and Practices*, NASA Issuance No. NHB 5320.3, Chap. 8, National Aeronautics and Space Administration, Washington, D.C., Oct. 1965.
4. Hoffart, H. M., "The Concept of Instrumentation Grounding as it Differs from Lightning and Power Fault Safety Grounding," proceedings of the 1966 Institute of Electrical and Electronic Engineers International Convention, New York, N.Y., Vol. II, March 1966.
5. *Performance Specification for Equipment Grounding Requirements on Preflight Acceptance Checkout Equipment—Spacecraft (P) ACE-S/C Program*, NASA/MSC (P) ACE-S/C Project Office Specification 53, Rev. 1, Nov. 15, 1963.
6. Hoffart, H. M., and Ball, N., "EMC Control Effort on the ACE-S/C System (Apollo Program)," proceedings of the Tenth Tri-Service Conference on Electromagnetic Compatibility, Chicago, Ill., pp. 58–76, Nov. 1964, and *Frequency Magazine*, Jan./Feb., 1965.
7. *Instrumentation Grounding and Noise Minimization Handbook*, AD-612 027, Consolidated Systems Corporation, Pomona, California, Jan. 1965.

N69-25946

Noise Problems With Single-Point Ground Systems

Richard H. Kelkenberg
Lockheed Missiles and Space Company
Sunnyvale, California

I. Introduction

In the last few years, most spacecraft electronics have been designed under some type of electromagnetic compatibility (EMC) program. These EMC programs have set design and performance requirements for individual black boxes in an attempt to minimize the occurrence of electromagnetic incompatibilities in the totally assembled spacecraft system. However, it appears that these equipment requirements are incomplete or lacking in some specific areas. This is confirmed when one type of EMC problem consistently occurs in the assembled spacecraft electronic system.

One problem area of this nature, the "ground noise problem," is the subject of this paper. More than one spacecraft integrating contractor has faced this problem, which is usually discovered during the first integrated system checkout of subsystems. Symptoms of this problem may be noisy outputs or improper output behavior. After extensive troubleshooting, the problem is labeled as a "ground noise problem" or "spikes on the ground bus."

The intent here is not to discuss the various merits and faults of the single-point and multipoint ground concepts, but to discuss noise problems that more frequently occur with single-point grounding than with multipoint grounding. The noise problems occur in equipment that meets the requirements of an EMC specification, but in the actual system, the equipment malfunctions. It is susceptible to noise voltages existing between a return and vehicle structure or between two different classes of returns.

This is a type of noise that is rarely covered in the present EMC specifications. Thus, the essence of the problem is that units are designed under the assumption of equipotential returns and structure ground, and are literally tested under this condition as individual units. But in an actual system, the units are exposed to an infinite variety of alternating current voltages between return leads and their cases. The following discussion examines the details of this problem. First, an analysis is made of the ground noise mechanism, then three examples of actual noise problems are reviewed. Finally, suggested design and test requirements are presented to minimize this type of problem.

II. Analysis of Unit Susceptibility

To understand the susceptibility of units to ground noise, the possible noise current paths are examined. Figure 1 represents, by a lumped parameter model, the input power and case structure current conducting paths.

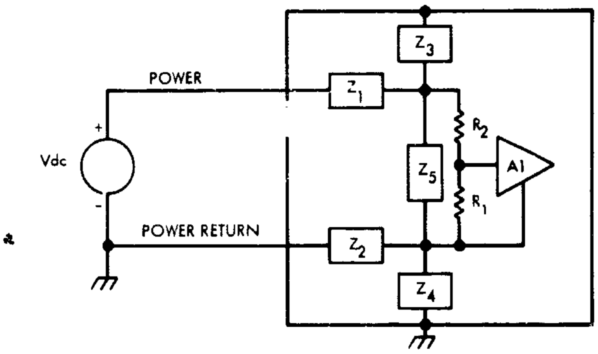

Fig. 1. Power input noise current model

Impedances placed in series with the power input are indicated by Z_1 and Z_2. These typically represent filters placed for meeting EMC requirements. The power input isolation from the unit case is depicted by Z_3 and Z_4. Normally this is the direct current isolation requirement of one MΩ or greater, but in this model it also represents the ac impedance. Internal loads are described by Z_5. The sensitive amplifier within the unit is described by A1. Using this model, it is easier to visualize the current paths that may reach the amplifier A1. The effects of the ac noise in series with the dc source will not be discussed, since they are covered by EMC requirements. Z_1 and Z_2 need only be made large enough to reject the ac noise frequencies. Attention shall be focused on the effects of ac noise voltages existing between the power return and structure.

In Fig. 2, an ac generator has been placed between the power return and structure. In addition, low impedances at Z_2 and Z_3 have been replaced with short circuits. Now it is easy to see that the ac voltage can flow into the unit and out through the unit case. Currents flowing through R_1 and R_2 produce voltages going directly to the amplifier A1. In practical terms, Fig. 2 is the case where the input filtering is located in the high side only, and a low capacitive reactance exists between the internal wiring and case.

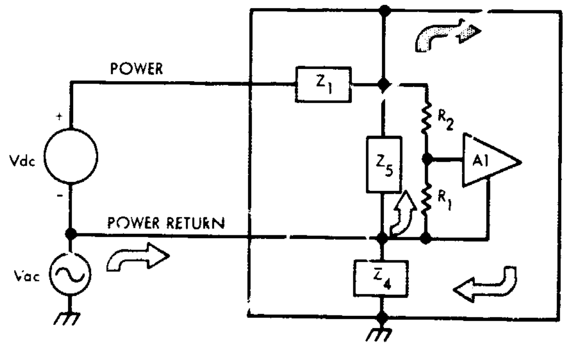

Fig. 2. Noise current with no return filter

The other case (Fig. 3) is the direct opposite of the preceding one. This is where the current flows into the unit on the power wire. Actual cases where current could flow in this path are remote. Designers normally locate filtering in the ungrounded power lead, so that Z_1 is a large rather than a low reactance. Thus, with this model for input power lines, it is demonstrated that the ac noise between the power return and the structure can flow into sensitive circuits within the units. But even more notable is the fact that units can be insensitive to large ac noise currents existing between the power input and the power return lead while being sensitive to return noise. Therefore, it can be concluded that a unit designed to normal EMC conducted susceptibility requirements possesses an unknown susceptibility characteristic to noise between the power return and structure.

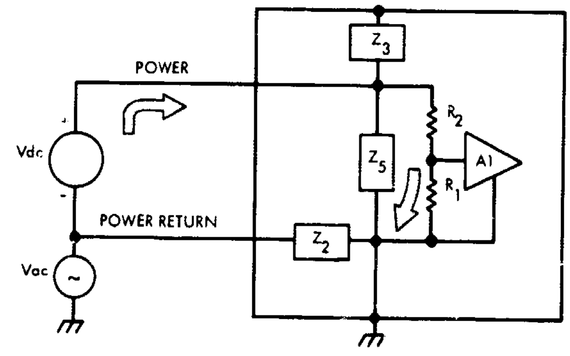

Fig. 3. Noise current with return filter only

A lumped parameter model, similar to the one of the previous discussion, can be used to examine susceptibility between two different types of returns. The returns can be power and signal, or two different signal returns. Within this general category, there are two types of possible current paths. The first type is where the current flows between internal high and low level leads in a manner similar to the cases just described. The second type of conduction path is through return lead common impedances. Therefore, two lumped parameter models will be used.

The first type of model (Figs. 4 and 5) investigates the possible paths of ac currents in a unit between the input power return and an output signal return. Impedances Z_1 through Z_5 represent a power input circuit identical

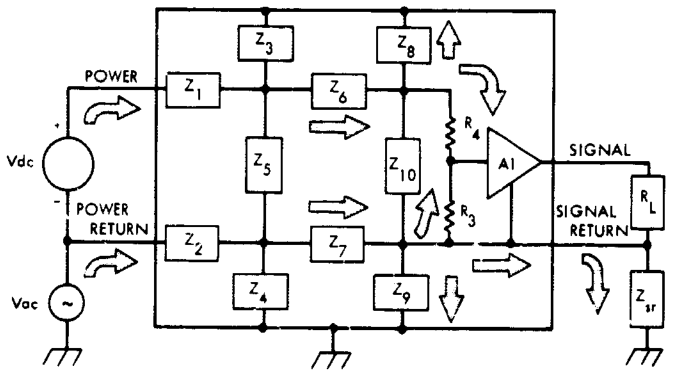

Fig. 4. Power return current path model

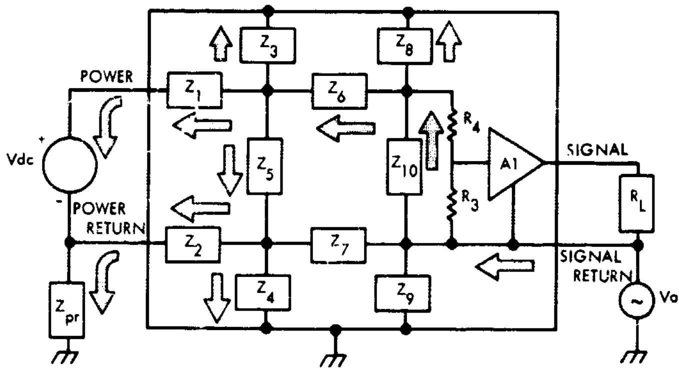

Fig. 5. Signal return current path model

to those in Figs. 1, 2, and 3. Z_6 and Z_7 represent the isolation impedances between the input power and the signal power. These typically are in the form of regulated power supply circuitry. Impedances Z_8 and Z_9 are the isolation impedances of the signal circuits from the unit case. Impedance Z_{10} depicts the load impedance between the signal return and its power source. A resistor network of R_3 and R_4 is connected to the sensitive amplifier; Z_{pr} of Fig. 5 and Z_{sr} of Fig. 4 are the impedances existing between the structure and power return and signal return, respectively.

Figure 4 shows the possible current paths for noise existing between the power return and the structure. As in the previous case, here are two paths of entry on the power inputs. How far the currents proceed is determined by the isolation impedances between power and signal circuits Z_6 and Z_7. With low isolation impedances, as with capacitive leakage in transformer windings, the impedances of the signal circuits determine if the currents reach the amplifier A1. Also external signal return impedance to structure (Z_{sr}) establishes whether A1 is affected. Thus, with ac noise between the power return and structure, there exist all the current paths described in the power input case plus the condition where the external impedance Z_{sr} can affect the results. Under certain design conditions, it is possible that the magnitude of Z_{sr} alone will determine the equipment susceptibility characteristics.

Also, if Z_{sr} is large, ac noise voltages may exist across it. This condition is illustrated by Fig. 5. In this case, the only path of current entry is through the signal return wire. Current entering on the signal return and proceeding beyond the upper node of R_4 can affect the amplifier A1. Current flowing through Z_8 is entirely a new situation from that described in the previous power return noise examples. Sensitivity due to current flow through Z_6 is somewhat redundant and bilateral to previous discussions, but there are some unique susceptibility situations. For example, if Z_1 and Z_2 are large and Z_3 is small, susceptibility tests on the power input would not reveal the sensitivity of the A1 amplifier to signal return noise.

The second type of noise current is conduction through a common return impedance. A lumped parameter model is shown (Fig. 6) with a common impedance Z_{14} between the two amplifiers A1 and A2. The impedance Z_{14} could represent the wire inductive reactance between the returns for A1 and A2. Thus, it could represent the impedance between two classes of signal returns or even the

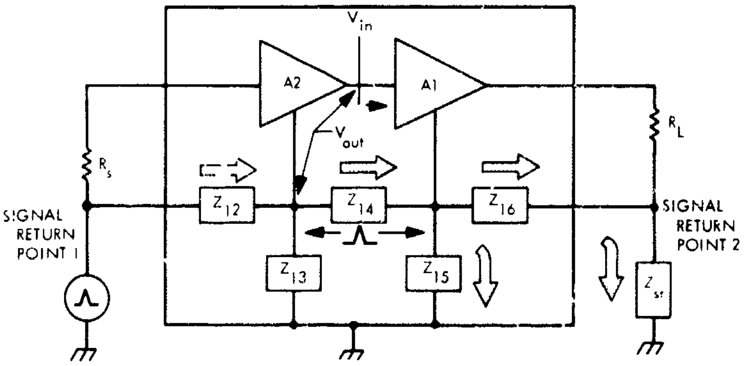

Fig. 6. Common return impedance model

impedance between different physical points on the same return. For this reason, the noise generator is depicted as a transient generator to emphasize the high frequency impedance aspect. The other line impedances are represented by Z_{12} and Z_{16}; capacitive reactances between returns and unit case are elements Z_{13} and Z_{15}; and the external impedance between signal return and structure is Z_{sr}. In this case, the input to amplifier A1 is affected by noise across Z_{14}. This noise is in series with the output of amplifier A2. Therefore, the amplifier A1 responds to the sum of A2 output voltage and the voltage across Z_{14}. Besides the impedance value of Z_{14}, the impedances of Z_{15}, Z_{16}, and Z_{sr} are equally important. In fact, this model shows that indiscriminate grounding of returns to case can make a unit more sensitive.

The common return impedance model (Fig. 6) was constructed with the noise generator located away from the amplifier A1. The same type of sensitivity can be examined by redrawing the figure with the noise generator and Z_{sr} interchanged. The results would be the same, except that some susceptibility characteristics would be bilateral and some unilateral. In other words, to determine the sensitivity of actual units, the noise must be injected in both returns.

The simple lumped parameter models (Figs. 1–6) illustrate how noise existing between returns and structure can affect electrical equipment. Before proceeding into the discussion of some practical examples of ground noise problems, the theoretical impedance of low-resistance ground wire will be investigated.

III. Impedance Characteristic of Ground Wires

The behavior of a low-resistance ground wire is best described by the analysis of a lossless transmission line terminated in a small resistance. This model can be used to investigate the impedance between a ground wire and the structure to which its terminating end is attached. For any transmission line, the impedance at any point looking toward the terminated end is[1]

$$Z_{in} = Z_o \frac{Z_t \cosh \gamma d + Z_o \sinh \gamma d}{Z_o \cosh \gamma d + Z_t \sinh \gamma d} \qquad (1)$$

where

Z_{in} = impedance at any point toward termination impedance

Z_o = characteristic impedance of line

Z_t = termination impedance

d = distance from point to termination

γ = propagation constant consisting of an attenuation constant α and phase constant $+ j\beta$

By making trigonometric substitutions to eliminate hyperbolic functions and retaining only the phase constant portion of the propagation constant, the equation for a lossless line becomes

$$Z_{in} = Z_o \frac{Z_t \cos \beta d + j Z_o \sin \beta d}{Z_o \cos \beta d + j Z_t \sin \beta d} \qquad (2)$$

where

β = phase constant = $\dfrac{2\pi f}{v}$

f = frequency

v = phase propagation velocity

---

[1] Reference Data for Radio Engineers, p. 558.

From this equation it can be seen that at very low frequencies, the impedance becomes

$$Z_{in} = Z_t \qquad f \to 0 \tag{3}$$

This relationship will hold true until the imaginary term of the numerator of Eq. (2) becomes significant. Therefore the condition of 3-dB inaccuracy will be when

$$Z_t \cos \beta d = Z_o \sin \beta d \tag{4}$$

$$\tan \beta d = \frac{Z_t}{Z_o} \tag{5}$$

which for

$$\beta d < \pi/8 \qquad \text{and} \qquad \frac{Z_t}{Z_o} < \pi/8$$

becomes

$$\beta d = \frac{Z_t}{Z_o} = \frac{2\pi f}{v} d \tag{6}$$

such that for

$$f < \frac{Z_t}{Z_o} \frac{v}{2\pi d} \tag{7}$$

Eq. (3) is an accurate description of the ground wire impedance. When Z_t is resistive, this frequency range may be designated the "resistive region."

At higher frequencies, the impedance will have a large imaginary component, so that it may be called the "inductive region." For conditions where

$$Z_t << Z_o$$

Eq. (2) becomes

$$Z_{in} = +j Z_o \tan \beta d \tag{8}$$

and further for $\beta d < \pi/8$

$$Z_{in} = +j Z_o \beta d \tag{9}$$

since

$$Z_o = \sqrt{L/C}$$
$$v = 1/\sqrt{LC}$$

where

L = inductance of line per unit length

C = capacitance of line per unit length

Hence

$$Z_{in} = +j 2\pi f (L \times d) \tag{10}$$

Thus, in the inductive region the impedance is simply the reactance due to the inductance, which is the product of the inductance per unit length times the line length. This region is approximated in this manner until the frequency reaches

$$f = \frac{v}{16 d} \tag{11}$$

Beyond the frequency of Eq. (11), Eq. (8) describes the impedance which increases nonlinearly with frequency. The maximum impedance at one quarter wavelength and at cyclic half wavelengths is

$$Z_{in} = \frac{Z_o^2}{Z_t} \quad \left(\beta d = (2n - 1)\frac{\pi}{2}, n = 1, 2, 3, \ldots\right) \tag{12}$$

With the same periodicity, the value of Eq. (3) repeats itself

$$Z_{in} = Z_t \quad (\beta d = n\pi;\ n = 0, 1, 2, 3, \ldots)$$

Thus, this entire analysis is simply a restating of basic transmission line theory. However, it places the discussion of ground wire systems in the proper perspective.

The meaning of the preceding equations is clarified by using them to determine the characteristics of a typical ground wire system. Take for example a 10-ft ground wire with a characteristic impedance of 200 Ω between it and structure. Under the assumption of linearity, this would be equivalent to 0.22 μH/ft and 5.5 μμF/ft. The resulting phase propagation velocity is 908 ft/μs. The end of the wire terminated to structure has a 0.1-Ω termination resistance, which is large compared to the wire resistance. According to Eq. (7), the impedance will be 0.1 Ω until the frequency reaches

$$f = \frac{Z_t}{Z_o} \frac{v}{2\pi d} = \frac{0.1}{200} \times \frac{908}{2\pi\, 10} = 7.3 \text{ kHz}$$

At frequencies increasing beyond this point, the impedance is the inductance of Eq. (10).

$$Z_{in} = +j\,2\pi f\,2.2 \times 10^{-6}$$

until

$$f = \frac{v}{16\,d} = 5.7\ \text{MHz}$$

The maximum impedance per Eq. (13) is

$$Z_{in} = \frac{Z_o^2}{Z_t} = \frac{200^2}{0.1} = 400\ \text{k}\Omega$$

which occurs when

$$\frac{2\,\pi f\,d}{v} = \pi/2$$

$$f = \frac{v}{4\,d} = \frac{908}{4 \times 10} = 22.7\ \text{MHz}$$

The impedance behavior of this example ground wire is graphed in Fig. 7. Note that the resistance regions end at the low frequency of 7.3 kHz. In the inductive region, the impedance is 1.2 Ω at 100 kHz and this is with a 10-ft wire. Longer ground wires, as indicated by Eq. (10), will produce directly proportional larger impedances.

From this analysis, it is seen that a low resistance ground wire system has distinct frequency-dependent operating ranges. At very low frequencies, it presents the terminating resistance; at increasingly higher frequencies, it presents an inductive reactance dependent on the system wiring configuration and is independent of the terminating impedance. At higher frequencies, the system presents cyclic resistive peaks and valleys. Therefore, from a theoretical standpoint it is illustrated how a low resistance ground system possesses large impedances. Next, some examples will be presented of actual equipment used in spacecraft that possessed sensitivity to ac noise on ground leads.

IV. Examples of Equipment Noise Sensitivity

The first example pertains to a very high gain amplifier in a horizon sensor system. A diagram of the key components is seen in Fig. 8. The sensing unit, a bolometer, is mounted directly on the sensor lenses. The output of the bolometer drives an amplifier with a gain of 80 dB The power supplied to the unit is a regulated +28 volts dc, which is further filtered and regulated by internal active circuits. The return lead is isolated from the case except for a 0.1-μF capacitor. Also, there is no filtering in the return lead, since it also functions as the signal return. Thus, the unit is designed to withstand sizable magnitudes of ac noise existing between the +28-V input and the return lead. However, noise voltages as small as 30 mV peak-to-peak between the return and case appear on the amplifier output. This sensitivity extends over two decades (see Fig. 9), starting at approximately 1 kHz.

Analysis has shown that the sensitivity has been caused by capacitive leakage currents from the bolometer to the case. The lens is isolated by a plastic gasket material from

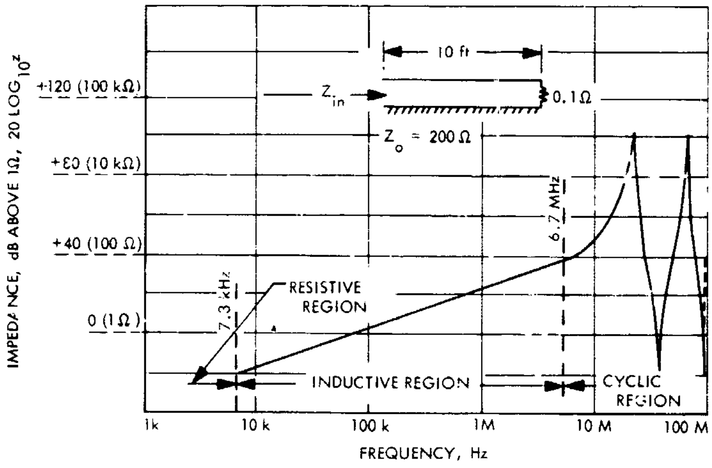

Fig 7. Example of ground wire impedance characteristics

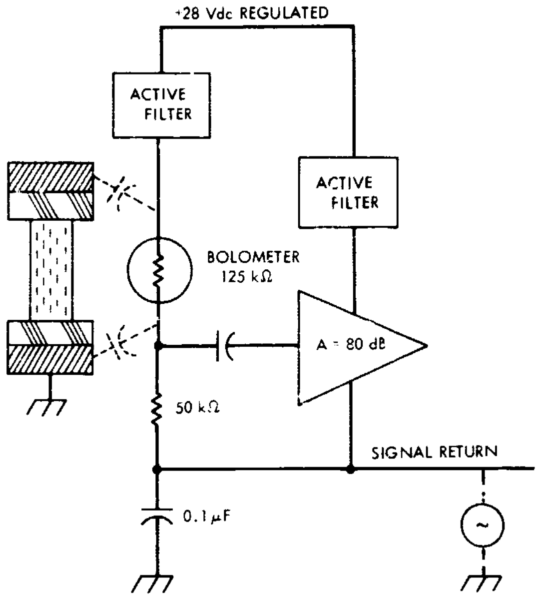

Fig. 8. Horizon sensor circuit

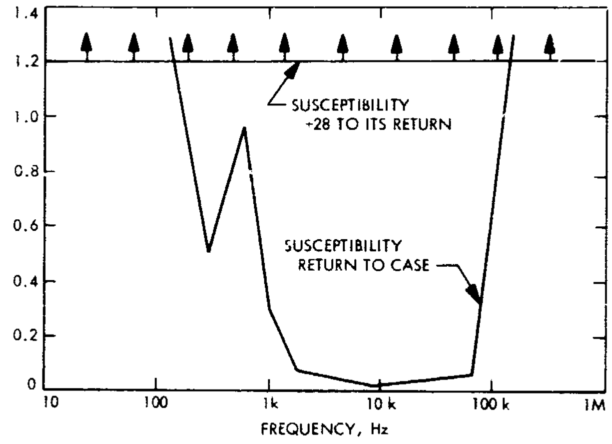

Fig. 9. Horizon sensor circuit sensitivity

the case. With the 80-dB sensitivity of the amplifier, leakage currents causing voltages of approximately 10 μV can significantly affect the output. Thus with this sensitivity, nanoampere currents leaking across the bolometer circuit affect the output. The only method of preventing the effects of ground noise is to attach the return lead directly to the case.

The second example concerns a heater control circuit which uses a regulated voltage for the temperature measurement and control loop. The control loop ultimately regulates the flow of current from an unregulated voltage source through heater resistors. Figure 10 is a sketch of the noise-sensitive components. The output of the temperature control loop (output of Q1) drives two transistors that perform the actual power control. The output of transistor Q2 drives a large power transistor Q3 connected into the unregulated power circuit. Under certain temperature conditions, all transistors operate in their linear regions.

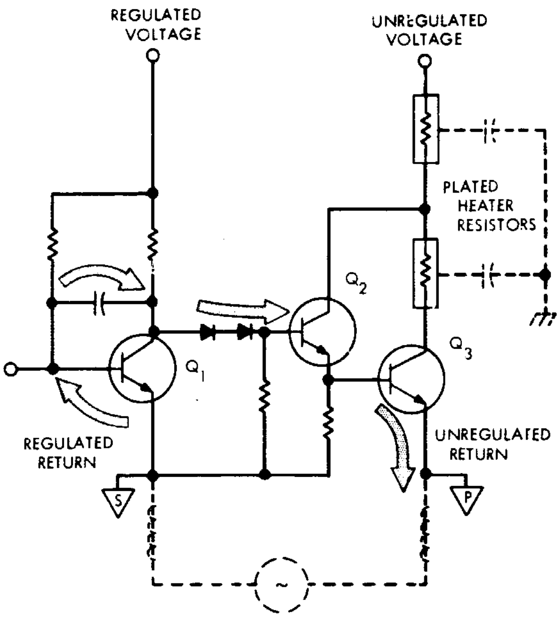

Fig. 10. Heater control circuit

In this case the problem occurs when the two returns are separated by increasing lead length, for not only will the transistors respond to noise, but they also have a tendency to oscillate. With long leads, noise voltages exist between the returns, as shown by the phantom lines in Fig. 10. A path for noise current to flow through the transistors is shown by the arrows in the diagram. The current through the power transistor causes a larger current to flow due to the gain of that transistor. With inductance caused by long lead length, the circuit is provided the necessary phase shift between input and output required for oscillation.

Evaluation proved the noise gain characteristic of this unit to be unusual. The gain was determined from three points to the heater output, as shown in Fig. 11. As described previously, the most sensitive path is between returns. However, it was also found that a sensitivity exists between regulated voltage and the case, which is more critical than between the voltage and its return. This example and this graph vividly illustrate the many potential sensitivities of a unit.

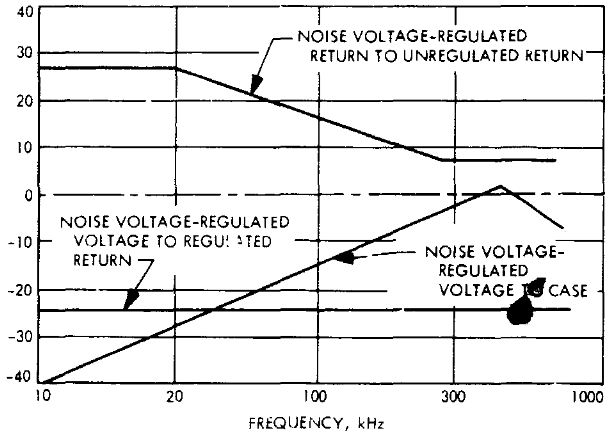

Fig. 11. Heater control circuit noise sensitivity characteristics

The third example is a signal decoder unit whose outputs drive relays. A block diagram of the components of interest is shown in Fig. 12. The unit uses a common signal return for input signals and relay outputs with the attachment to structure on the signal input side. This return is isolated from the input power ground (not shown) by a dc-regulated supply. The unit functions by the use of a decoding matrix logic which selects the proper relay to operate. In the decoding matrix, some of the latest state-of-the-art solid state components are utilized. It was discovered that the unit provides false outputs when short width pulses are applied between the relay return and case, with grounding as shown in Fig. 12.

Further, it was found during tests that transients caused false outputs when applied between the physically separated ends of the common return designated signal input return and the relay output return. However, for improper operation, the transients had to be less than 400 ns wide and greater than 5 V peak-to-peak. In this case, the impedance of the length of wire, used as a return between the decoder circuit output and the relay driver circuit input, is sufficient to sustain the short duration voltage spike. This narrow spike, rich in high-frequency components, generates a common impedance voltage into the relay driver. The only corrective method which can be applied external to the unit is to attach the signal return to the case at both points.

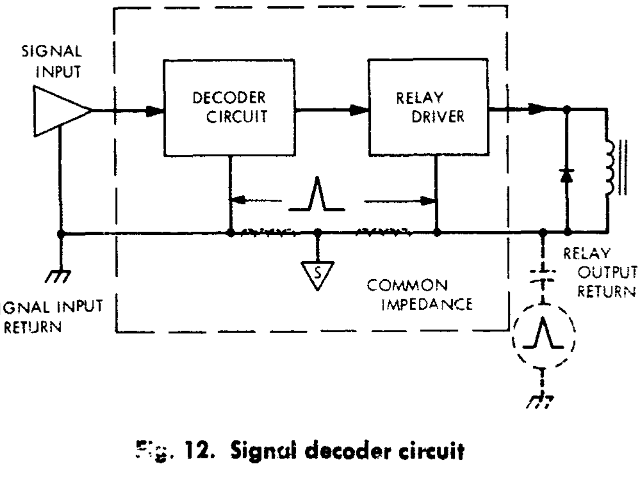

Fig. 12. Signal decoder circuit

V. Requirements and Tests for Ground Noise

It has been pointed out by both analytical discussion and actual examples that electronic units have sensitivities to ground noise which may go undetected during unit tests. After reviewing this problem, it is quite obvious that some additional unit EMC requirements and tests would be beneficial. The conducted susceptibility testing should expose the units to ground noises similar to those occurring in spacecraft. To do this, the low-frequency sine wave and transient susceptibility tests should be modified and increased in scope.

One change that should be made in the low-frequency sine wave susceptibility testing is to relocate the injection transformer. At present, the transformer is required to be located in the ungrounded lead. This location does not expose the unit to ground noise, except for the voltage dropped in the return leads in the test setup. In contrast, if the transformer is located in the return lead (Fig. 13), the return lead is impressed with an ac voltage with respect to the case. At the same time, the ac voltage is imposed between the high and return leads, as when the transformer is located in the ungrounded lead.

In a similar manner, the transient susceptibility test signal should be applied between returns and case. Also, the nominal 10-μs pulse width for the transient test is insufficient for present circuit designs. Pulse widths should be added in the range of 100–500 ns. These narrow pulse widths should be placed only on the returns because they normally have little filtering. Other than returns, filtered power inputs, which are designed to reject the 10-μs pulses, normally can reject narrow pulses.

The scope of conducted susceptibility testing should be increased to encompass all classes of returns routed

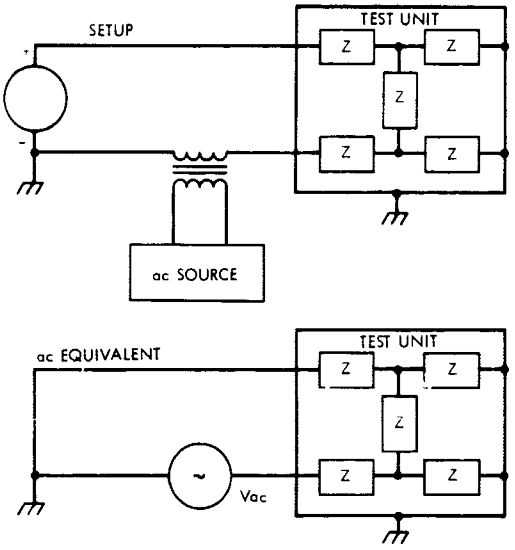

Fig. 13. Revised AF-conducted susceptibility test setup

external to a unit. Test signals should be applied between each return and case while other normally grounded returns are grounded to case. In this way, each unilateral current path from returns to case and from returns to returns will be tested. The amplitude of the test signal need not be as large as the power input susceptibility levels. But the levels should be chosen to be consistent with possible system worst-case levels. In this manner, potential problem areas are identified.

VI. Summary

This paper has attempted to focus attention on one area of EMC that requires improvement. Current EMC specifications do not prevent the building of electronic units that are sensitive to ac noise existing between returns and case and between different returns. An analysis of units has proven that this weakness does exist and has shown how the impedance of return wires permits noise voltages. In addition, three examples of actual problems due to this type of ac return noise have demonstrated the validity of the analysis.

Therefore, to decrease the probability of noise problems of this nature, it is proposed for individual units that:

(1) AF-conducted susceptibility tests be performed with the transformer located in the return lead.

(2) Transient susceptibility tests be added to inject signals between return and case.

(3) Transient susceptibility tests on returns utilize pulse widths between 100 and 500 ns.

(4) Conducted susceptibility tests be added for all returns routed external to a unit.

The incorporation of these recommended requirements, though increasing the amount of unit testing, will provide necessary coverage of an area that accounts for a large number of spacecraft system problems.

Discussion

Richard H. Kelkenberg: I was particularly interested to hear Mr. Hoffart's talk, because I think there is a comparison in the way we attack the problem. I believe he is attacking it primarily from the point of how to prevent noise from occurring in a system by the design of a grounding system. I talk about how to minimize a unit's susceptibility to noise in ground systems. What I call ground noise, some people call common mode noise.

When a spacecraft is in some of its first integrated system tests, noises are found occurring between the power return and structure, signal return and structure, return to return, return type A to return type B, or return type A to return type A. In contrast to what Mr. Hoffart said, I take the view that there is no such thing as a zero reference potential. If you use that concept, there really is no such thing as a multipoint grounding system, except in the physical sense.

We have this problem today because we are overlooking some things. One of the things is that we have a great feeling of confidence when we meet our susceptibility that we have set up between the power input and power return. But, even if we meet these requirements, we still have problems. Most specifications that I am aware of do not speak of this problem. The only exception that I know of is that of Mr. Lewis from Boeing or some of his other people. I have seen one of his proposed specifications, in which he did apply signals and tried to cover this environment of noise existing between the power return and the structure of the unit.

Chet Hastings: Would you advocate that such a circuit level ground noise analysis is the role of the EMI engineer on a project, or would you advocate strengthening the design process by having the design people responsible for carrying out such an analysis?

Discussion (contd)

Richard H. Kelkenberg: I guess I am not worried about the name of the game. I like to consider myself an EMI engineer who is concerned with designers' problems, or an EMC engineer. The management policies and the personal relationships that are involved in getting these jobs done is a matter that each company has to work out for its own particular situation. If you work in a company where there is management that gives a lot of backup for EMC, maybe it is the job of the EMC engineer. But in other areas, if EMC is not contractually required, as in some of the cases we were talking about previously, it may be the role of the design engineer. It is a management problem. I am strictly addressing myself to what I feel is a technical problem.

Chet Hastings: I am asking the question because the implementation of EMC is the responsibility of the EMC community. We cannot presume that the other person will get the job done; it is up to us to see that it is done. I am asking you what you do to implement this information; or do you analyze it yourself and come up with the results which you put out in an advisory circular?

Richard H. Kelkenberg: In my particular situation, I found that in my working environment right now the best way to get things done is to put it into the specification in the designer's language. The EMI section of the specifications I am involved with are 1½ or 2 pages because I tell what I want. If I put it in the specification and it is signed off, I get what I have asked for. That is how I operate.

Chet Hastings: So what that would mean is that you would specify, for example, the voltage amplitude of the ground noise requirement into a particular black box (or something like that) on the signal leads which you have predetermined from a network analysis (or something like that), or by guessing at the pickup in the ground leads.

Richard H. Kelkenberg: I am not entirely guessing. I am making an educated guess, just as you do on EMI specifications when you have to defend a particular requirement. You have an EMC specification that says you have to have a 50-V transient. I could ask why you do not use a 42.5-V transient. I pick my voltages on the basis of what we have in our system environments and then I add on a safety factor. Whether that safety factor is 6 dB or 12 dB, the voltage always comes out to be a nice round number.

Chet Hastings: But the point is that you are carrying out the analysis that allows you to specify this and you are not having the designers do it as a normal part of the design process. You are asking them to make an analysis based on information which you have in the specification that says so much ground noise exists.

Richard H. Kelkenberg: I do this as much as possible. I specify what we consider to be the noise environment, based on any measurement that we have. They may be meager measurements, but if there are any measurements at all, we use them as the basis for building our requirements. Then, once you have established what the requirements are for the designer, by whatever techniques of analysis he has, he just designs it that way. He does not build it and then analyze whether he has compatibility. We work on the positive approach of telling him what the environment is and letting him design to live within it. I work with the designers and I say, "You have all these other 10 or 20 subsystems. Those people are all working against you. They are going to try to make your box look bad. I am here to help you."

Chet Hastings: On the horizon sensor circuit (Fig. 8) you showed the 0.1-μF capacitor from the bottom of the bolometer to the chassis and showed that there was a common ground noise problem. I missed the point. What was the ultimate solution to avoid common mode noise into that amplifier?

Richard H. Kelkenberg: The solution was to ground out the noise coming into the box or shorten down the leads. The problem occurred when the system wiring would get too long.

Chet Hastings: Due to loop pickup in the AC loop formed by the capacitor?

Richard H. Kelkenberg: I do not know. You are missing the point that I am talking about. My point is that, regardless of how the noise gets there, it is going to be there, and if it is going to be there, you tell the designer that it is going to be there and he had better design to accommodate it. Whether it is 0.5 V or 100 mV, it is your duty as far as EMC engineering is concerned to define what that is, because the people are saying that they have problems. Why they have problems is because nobody is designing to accommodate the problems.

Chet Hastings: I have the same problem that you have illustrated, realizing that the capacitor was necessary due to the stray capacitance variation between the case and the bolometer. It was a design requirement that they have the capacitance, so we had to tolerate the ground noise coming in by that path. One solution, which I will share with you, was that we used a ground connection that came directly into the bolometer low side and then the common mode noise that developed along the amplifier path by another wire was all taken in to the output signal. In other words, we allowed the noise to exist, but it only manifested itself as part of the output which was at a much higher level and became a less significant part of the total signal. So it was an allowable error. That is why I was interested in what you had done.

Richard H. Kelkenberg: I think that is a good concept. It just illustrates that you cannot make any rule in EMC that is going to make everybody happy. What you are saying in principle is that you allowed the noise where the signal-to-noise ratio was great enough, so that you did not care about it. My feeling is that that is doing a good engineering job.

Joseph C. Thornwall: We build scientific experiments and we have noticed that the most important path is that common return. It is meaningless to try to pump current into the hot side of the power line, because I do not know anyone who does not have some impedance there. The very vulnerable parts of the circuit are the returns and we have found this to be a good criteria of how susceptible an amplifier is. I am not an EMI engineer and so I do not know anything about these terms, but that is what we have found in building amplifiers.

G. L. Miller: I would like to agree entirely with these points that you have made and which Mr. Thornwall has made about testing packages for ground return, as well as power supply line sensitivity to transients. We have done this routinely with our packages simply by means of having a small toroidal transformer and passing the various ground and power supply wires through it in turn, and injecting spikes of the order of 1 or 2 V. One thing I would like to add, however, is the advantage of doing this as a function of frequency. One should have a pulse generator which generates a fast narrow pulse and then one should scan this as a function of frequency. For example, in our IF amplifiers we would find in packages which would exhibit this ground-to-ground noise problem, that you could hit the subharmonic of the IF. Every time one of those spikes came along, it shock excites the IF filters and if you are at a subharmonic, the effect is enormously enhanced. I would like to suggest that this be added as a piece of that specification.

Discussion (contd)

Richard H. Kelkenberg: I think that is a good comment. I also want to point out that he is only talking about 1-V spikes, so that people do not go away with the misunderstanding that we are talking about 50-V spikes.

G. L. Miller: These were 3-V supplies, though.

William R. Johnson: I think that a lot of these problems can be further minimized if we recognize that, if we did not put that ground asymmetrically in that power circuit or in any of the other circuits, but put it in the center of them and ran it symmetrically, most of our common mode problems would disappear.

Richard H. Kelkenberg: When I was introduced to EMC, RFI, and EMI, I was told that single-point grounding was the only way to go. My own personal feeling on this has always been since that time, and since I have run into problems, and I assume that you have, that it has always been a constant battle to justify why everybody is always so strong on single-point grounding. What is wrong with multipoint grounding? I have found some answers both ways. I think Mr. Lewis from Boeing expressed my feeling, and I have heard other people say this: if there is one thing you can say about a single-point grounding system, it is that when you want to go from single-point to multipoint grounding, it takes a wire, or wires.

N69-25447

PRECEDING PAGE BLANK NOT FILMED.

"REPRODUCIBILITY OF THE ORIGINAL PAGE IS POOR."

EMI Problems in Scientific Payloads for Space Applications

Joseph C. Thornwall
Goddard Space Flight Center
Greenbelt, Maryland

I. Introduction

The experiences and techniques described in this paper are a result of six years of work at the Goddard Space Flight Center designing and building the electronics for scientific payloads for an *OAO* and several *OSO* satellites, *Aerobee* rockets and balloons. This experience has shown that most of the EMI problems that occur, when a payload is integrated into a space vehicle, are a result of improper electronic circuit layout and design. This can be a very serious problem because, as a rule, the troubles are not discovered until the time of integration, and the launch schedules generally do not permit the time to make basic design changes in the unit that are actually necessary to correct the problems. What is generally done at this time is to try this or that on a cut-and-try basis, such as adding filters to the interface wires, placing the complete experiment in a shielded container, and disconnecting certain ends of the shields of particular shielded interface cables. In short, anything is tried that will reduce the noise to an acceptable level. The only trouble with this approach is that one seldom finds the basic cause of the problems. Also, conditions may change at a later date, and the noise may reappear because the basic troubles were not corrected. Moreover, the kind of things that are done on this cut-and-try approach sometime end up in vehicle handbooks telling an experimenter how he should terminate the shields or handle this or that ground, etc.

II. Signal and Power Interface Sources

One of the major sources of noise in a space vehicle is brought about by the way most vehicles take care of the signal and power interface between the experiment and the spacecraft. The way this is done is reminiscent of the way the wire communication companies, back in the early days of telephone, tried to conduct voice signals from one point to another. It was a common practice in those days to run one conductor on a pole high above the earth, drive a long ground rod into the earth near each end of the line, and allow the voice signal return to be conducted through the earth. When it rained, communications were good; when lightning struck, communications were certain to deteriorate. During prolonged dry periods, the subscriber had to shout into the instrument in order to be heard. Also, if there were many subscribers using the same scheme, there would certainly be a lot of crosstalk in the common path of the earth. The telephone company must have soon realized that economy was not the most important factor, and in order to obtain reliable

"REPRODUCIBILITY OF THE ORIGINAL PAGE IS POOR."

communications, they were forced to use a balanced pair of electrical conductors which were isolated as much as possible from the noisy and unpredictable earth.

This analogy may be a bit exaggerated when applied to the interface between an experiment package and a space vehicle; at least the vehicle frame is not used directly. A separate signal and power common is generally available and the metal frame of the vehicle is not deliberately used as a return path for signals and power. However, there is one basic flaw in this scheme. Signal and power transients with fast time rates of change conducted on unbalanced lines can still be injected, as noise into the vehicle frame, into adjacent conductors and into vulnerable circuits of an experiment. So, whether it is intentional or not, the vehicle frame becomes a potential source of noise on any unbalanced signal and power system.

III. Design for Minimum Response to Noise

The best way for the experiment designer to solve this problem, knowing that it exists, is to design and fabricate the sensitive circuits of the experiment so that they will have a minimum response to the noise. The most vulnerable circuits in a typical experiment are the high-gain amplifiers. Figure 1 is a block diagram of an amplifier connected to a detector and power source. This diagr was drawn to show how noise on the chassis can coup into an amplifier. Chassis connections C, D, E, F, and H (Fig. 1) do not necessarily represent conductive connections, but may actually be capacitive reactances between various circuit components close to the chassis.

The impedances shown are the impedances of interconnecting wires or the impedances between chassis. All of these impedances can have noise pulse voltages developed across them that can couple into the amplifier. To reduce the effect of this noise, the value of these impedances must be arranged to minimize the amplitude of noise voltage across points A and B. This is accomplished by making some impedances large and some small. In general, impedances Z_1–Z_4 should be made as small as possible and impedances Z_5–Z_9 should be made as large as possible. As a practical matter, impedances Z_5–Z_9 can be made large by insulating the experiment chassis from the vehicle frame. These precautions will not necessarily eliminate the noise coupled into an amplifier, but they will certainly minimize it.

It should be noted that only one of the chassis impedances, Z_1 between point B and the chassis, should be made small. This is the connection that is made to the common input of the amplifier. The reason for this is that

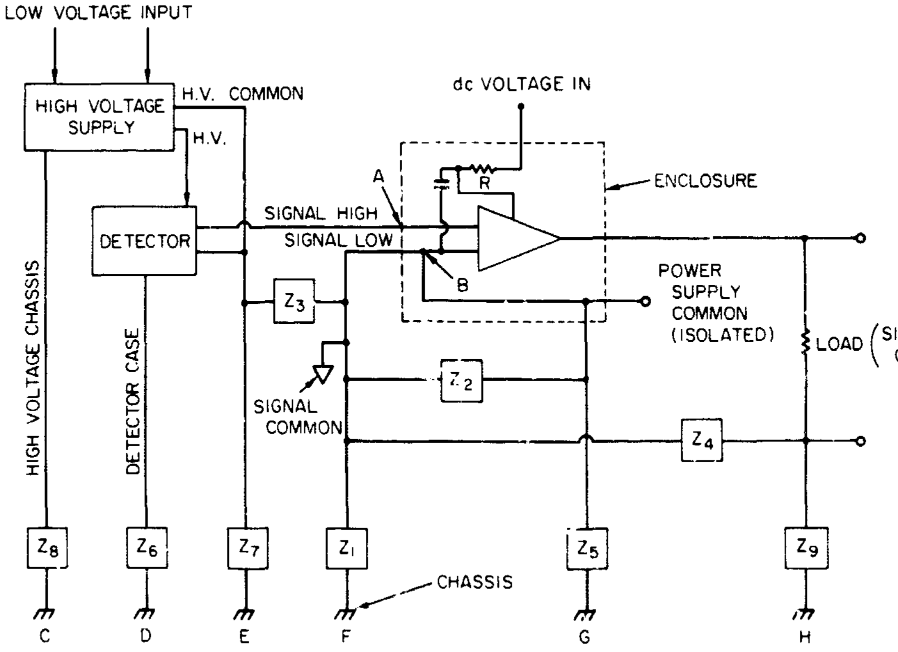

Fig. 1. Common returns of amplifier connected to a detector and power source

by making impedance Z_1 as low as possible, the signal high input at point A will be surrounded by an enclosure that is at the same relative noise signal potential as the signal low input at point B. Thus, if a noise signal should appear on the chassis of the experiment package at this point, both the signal high and the signal low will follow in common mode and thus minimize the difference of potential between points A and B.

Figure 2, a simplified block diagram of the area around the input of the amplifier (shown in Fig. 1), was drawn to illustrate another vulnerable part of the circuit. This diagram shows what can happen if the signal and various power commons are not connected to the proper place at the input of the amplifier. Assume that J (Fig. 2) is a convenient point in the system to which all of the commons are connected. The impedances Z_7 and Z_3 represent the impedances of the wires connected between the detector and amplifier signal low. Let us assume that there is some high-frequency power supply ripple or other noise on the low-voltage dc input to the amplifier.

There is incorporated in this amplifier a low-pass filter R_1 and C_1 that is supposed to bypass this noise so that it will not be introduced into the input of the amplifier. The only trouble with this arrangement is that the noise pulse currents flowing through capacitor C_1 must return through Z_3 as it flows back to the power supply common. So, instead of decreasing the noise on the input of the amplifier as the value of capacitor C_1 is increased, the noise input will actually increase. To eliminate this voltage source, impedance Z_3 must be made as small as possible. In addition to this, there is another similar noise source from bypass capacitor C_2 conducting noise currents through impedance Z_7 that will also introduce a noise signal to the amplifier input. It can be concluded from these arguments that *all* commons must be connected together at point B and at no other point. Also, if there are several amplifiers in a system, all operating from the same low-voltage power supply, a flat braid (low inductance strap) or the experiment chassis should be used to connect the B points of all of the amplifiers.

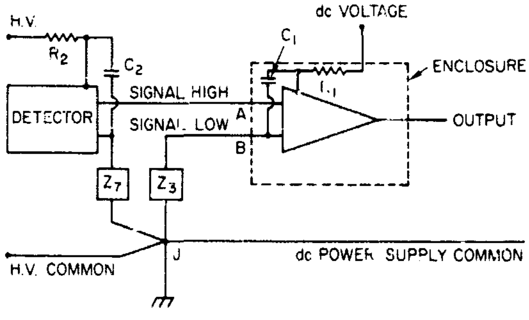

Fig. 2. Common returns of input to amplifier, simplified diagram

There are many other ways in which noise signals can be introduced into an amplifier; however, many of them can be eliminated by using an isolation power supply. Figure 3 is a schematic of the power supply common between the experiment and the vehicle. The vehicle power common (point F, Fig. 3) is generally connected to the spacecraft frame at a point far removed from the chassis of the experiment (point E). If the experiment does not have an isolation power supply to break this path, a chassis ground loop will be present through impedances Z_1, Z_3 and Z_7, and any noise pulse currents flowing over this path will cause noise signals to be introduced into the amplifier input by the voltage drops across these impedances.

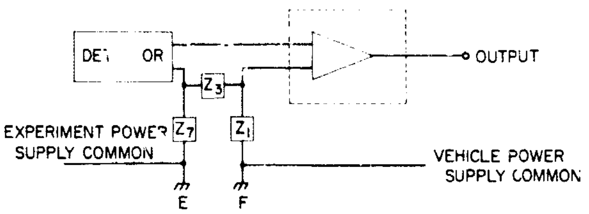

Fig. 3. Power supply common between experiment and vehicle, simplified diagram

It is evident from this discussion that, for maximum noise immunity, all conductive paths between the space vehicle and the experiment should be eliminated. Figure 4 is a schematic diagram of one of the signal isolation techniques that has been used with good results in a camera and sequence timer we have flown on *Aerobee* rockets. A great deal of care has gone into the design and fabrication of these timers because the mission would fail if they were to respond to one noise pulse during the rocket flight.

A sequence timer, for example, is used to turn on and off several experiments, initiate camera timers at the proper time, and perform other experiment control functions during the flight. The initiation of the timing sequence is started at T − 15 s and from that time on, during the launch and powered and coasting phases of the rocket flight, this timer must operate without a single

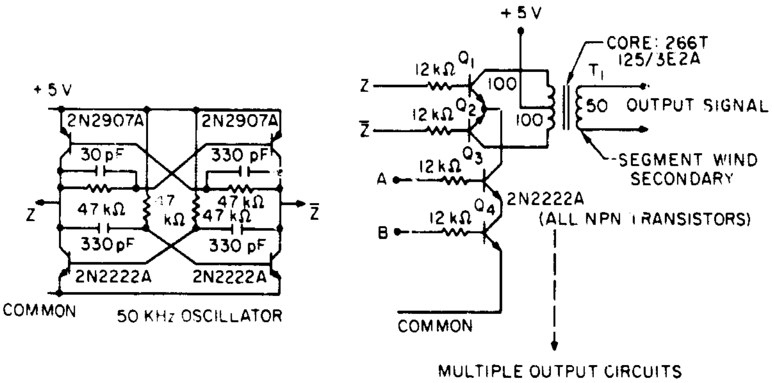

Fig. 4. Signal isolation technique of camera and sequence timer for *Aerobee* rockets, schematic

response to external noise. All power and signal connections to the timer were conductively isolated. The output of the circuit (Fig. 4) is used in this application to control a relay and camera solenoids at a remote location.

The 50-kHz oscillator is a complementary-symmetry flip-flop connected as a free-running multivibrator. The single multivibrator on the left side (Fig. 4) was used to drive several of the circuits shown on the other side of the figure. The output circuit, driven by this multivibrator, is a push-pull transformer-coupled amplifier with gate transistors Q_3 and Q_4 connected in series with the emitter returns of push-pull transistors Q_1 and Q_2. The secondary of transformer T_1 is segment-wound from the primary to minimize the capacitance between these windings. This particular transformer has an interwinding capacitance of approximately 15 pF and an output impedance of 30 Ω.

Transistors Q_3 and Q_4 comprise a two-input "and" gate. As many as four series-connected transistors have been used to provide more complicated logic. The circuit operates very simply; transistors Q_1 and Q_2 conduct through the series-connected gate transistors Q_3 and Q_4, when inputs A and B are both positive, and cause a 50-kHz signal to appear on the isolated secondary winding of transformer T_1. To achieve a maximum of noise immunity, this output signal was conducted on a twisted-pair balanced line enclosed in a shield.

This type of carrier scheme provides an excellent means of rejecting noise that may be induced in the output line, between the experiment and the load, and noise that may be present on the common return of the load circuit. One side of the secondary winding on transformer T_1 can be connected to any power common in a system, no matter how noisy. Any noise signals that are present on both conductors, i.e., unbalanced noise voltages, must pass through the very small 15-pF interwinding capacitance to gain access to the experiment, and any balanced noise signal voltages must be of sufficient magnitude to couple into the 30-Ω twisted pair shielded line.

IV. Signal and Power Isolation

Transformer circuits, both linear and nonlinear core types, have been found to be very useful for signal and power isolation in experiment design. Figure 5 is a classic example of conductive isolation using a nonlinear core transformer; three commons are isolated in one transformer. This circuit was used in an experiment in which a standard robot camera was used to take pictures of the sun. This camera has a solenoid for operating the camera shutter and a dc motor for driving a 35-mm film transport mechanism. The solenoid requires a dc current of 0.68 A and the motor requires 0.40 A. Because of a variable motor load and commutator and brush arcing, while operating in a vacuum environment, the motor generates considerable noise. To keep this noise from being introduced into the telemetry common return and the signal-carrying circuits of the experiment, a separate power common lead was provided just for the motor and solenoid (point A, Fig. 5). The problem is that a signal is required for telemetering back to the ground a record of the solenoid closure and motor operation time.

A straightforward way to provide a signal would be to drop a small portion of the voltage applied to the motor and solenoid across a resistor in the common return and apply this voltage to the telemetry input. Unfortunately

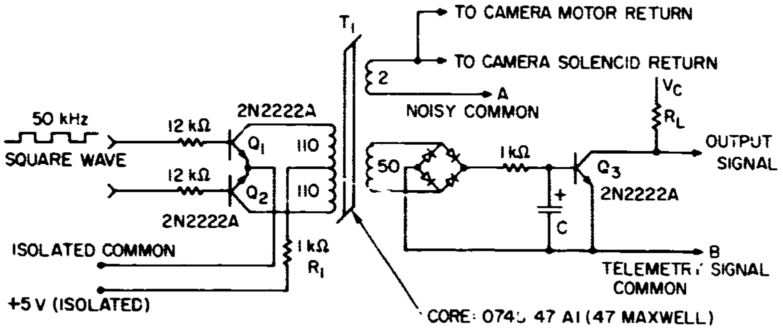

Fig. 5. Conductive isolation using a nonlinear core transformer in a camera motor and solenoid indicator circuit

this would mean connecting the rocket signal common (point B, Fig. 5) together with the noisy motor and solenoid common (point A, Fig. 5). This would cause the noise appearing at point A to be present on all of the signals applied to all telemetry inputs. This is a good example of how an unbalanced signal input system can present problems.

This circuit provides the necessary isolation and operates in the following way: push-pull transistors Q_1 and Q_2 are driven by a 50-kHz square wave to provide a signal on the 50-turn secondary winding when there is no current through the two-turn winding. The value of resistor R_1 is small compared to the impedance of the 110-turn primary winding of transformer T_1, and most of the 5 V appears across the primary. Under these conditions, the bridge rectifier provides a positive dc voltage to the base of switch transistor Q_3 and the output signal line is clamped to the telemetry signal common. The output signal will remain at approximately 0 V until a current from either the camera motor or solenoid is applied to the two-turn winding. The operation of the camera solenoid or motor applies an excitation to the two-turn winding of 0.8 to 1.3 A-t and drives the core far into saturation. This causes the impedance of the primary of transformer T_1 to go to a very low value, compared to the value of resistor R_1, and all of the primary signal voltage drops across resistor R_1. The output square-wave voltage appearing on the 50-turn winding drops to zero under these conditions and transistor Q_3 turns off, which causes the output voltage to rise to the value V_c and remain there as long as the camera solenoid or motor is operating.

This single small transformer performs the function of isolating the common returns of three power supplies and signal circuits and does it very effectively. In fact, the telemetry records that are acquired during the actual flight are so free of noise that they look as though they had been obtained under laboratory conditions on the ground.

V. Proper Design and Fabrication

These circuits represent only a small sample of the kinds of things that can be done to eliminate noise signals from an experiment. The most important thing to remember is that an experiment that is improperly designed or fabricated can never be completely free of noise problems, either internal or external. Worse than that, because of the many paths for noise to enter an experiment, it is extremely difficult, if not an impossible task, to solve the noise problems at the time of integration in the vehicle. About all that can be done at integration time is to isolate and filter at the interface and hope this will do the job, and that conditions will not change after launch. On the other hand, if every precaution, as described here, has been taken in the design and fabrication of an experiment, it is generally a simple matter to find the entrance point for the noise and take steps to correct the problem. This is true because, if the circuits have been handled properly, there can only be a few places for noise to enter the experiment, and these points will be well known.

A good example of this is the problem that came up when our first camera timer was integrated into a system. Every precaution was taken in the design of this equipment to eliminate the obvious conductive paths between the timer circuits, other circuits of the experiment and the vehicle, except one. This was an output flip-flop used to control a relay at a remote location for opening the camera shutter. This flip-flop was powered directly from a common battery bus and the output line was run a considerable distance to the camera. All input signals to this flip-flop were conductively isolated from the timing circuits. The unit functioned very well during ground tests up to the point where the experiment package was placed into a "stow" condition in preparation for reentry into the atmosphere. At this time the flip-flop in the timer was spuriously triggered. It was obvious that the noise entrance was via the flip-flop output line or power bus, because the input was just too well isolated for the noise to enter from the input side of the flip-flop.

It was found experimentally that, when the timer package was lifted from the vehicle, the flip-flop did not respond to the noise. Investigation showed that a relay at a distance from the timer package, part of the vehicle electronics, was opening at this time. Furthermore, there was no diode across the relay coil and, as a result, a voltage spike of 600–1000 V was produced during the collapse of the relay's magnetic field. This voltage transient was apparently coupling into the output flip-flop via the output signal line or power supply common to the flip-flop and back to the chassis.

This problem was solved by placing a diode across the relay coil (to eliminate the noise at the source) and by insulating the timer chassis from the vehicle. The flip-flop did not spuriously respond when the relay transient was removed and it would not have been necessary to insulate the chassis. But it was felt that, since the unit was not being tested under actual flight conditions, it would do no harm to insulate the chassis and it just might prevent a spurious response during the actual flight. A 50-kHz carrier signal scheme has been incorporated into subsequent units and, as a result, there has never been a spurious response in later flights.

VI. Recommendations to Eliminate Noise Signals

In conclusion, the most important points and precautions that should be observed to minimize noise pulses coupling into the circuits of an experiment are summarized. It is interesting to note that, if noise is introduced into an experiment when signal cable shields are tied to the chassis, it is a good indication that amplifiers in the experiment are improperly connected. This is especially troublesome if the interface signals have not been conductively isolated. Without this isolation, the vehicle and experiment chassis will be connected together through the interface. An unbalanced shielded cable that has one end of the shield floating will radiate. Therefore, it is essential that the shield tie to the chassis to eliminate this radiation. One end of the shield should never be removed from the chassis just because it reduces the noise in an experiment. It is much better to locate the point at which the noise is introduced into the system and find some method to remove this path or, better still, the circuit layout or cabling within the experiment should be changed so that it does not respond. This is very important because there is no assurance that conditions will remain the same during the actual flight, and if a circuit has been found to be vulnerable to noise on the ground, it may respond under the new conditions that exist after the vehicle is launched.

The points and precautions to observe in experiments, so that noise signals are eliminated, are summarized as follows:

(1) Use an isolation power supply.

(2) Connect the experiment isolation power supply common return to the lowest level amplifier in the system.

(3) In a multiple amplifier system, connect all of the amplifier common returns together with a flat braid.

(4) If at all possible, conductively isolate the signal outputs and inputs to further remove the conductive paths between the experiment and the spacecraft.

(5) Electrically insulate the experiment chassis from the spacecraft.

(6) Do not allow the current from pulsed electromechanical devices within the experiment to flow on the experiment chassis.

(7) Provide isolated balanced pair conductive paths for all pulsed devices within the experiment (stepping motors, calibrators, relays, etc.).

(8) Connect the experiment chassis common to the same point as the experiment isolation power supply common.

(9) Connect the detector signal common to the same point as the experiment power supply common at the amplifier input.

(10) The shields on all shielded wires should be connected to the chassis at as many points as possible.

Discussion

Guy L. Ottinger: I enjoyed your presentation and agree with many of your precautions. Some of them clash violently with so-called standard EMI practices that we are bound to do by many of the specifications or good practice manuals, handbooks, etc. Perhaps your solutions in some cases might be a quick fix, whereas if they designed a little differently, we could all live together. I am thinking of the one case where you recommend that the chassis of the box be lifted from the structure. I would hazard a guess that if you did that, quite a large number of boxes would not work at all. We have run into this quite frequently. Sometimes the best solution is that the better you strap it down, the more zero equipotential ground plane you have, and the better it works. It is obviously a design problem internally in the box. That is why sometimes in the fixes that you apply, you use trial and error and do the best you can.

Joseph C. Thornwall: Yes, I think the point is that the reason it works is because it is tied down. If you take it off, you have a kind of vulnerability as I've pointed out earlier. I do not think the experimenter should be demanding shields and filters outside. That is my personal opinion. His troubles are probably right inside.

Roy A. Long: I would like to emphasize the same point. In looking at these problems usually from a different aspect than most of you, we come from the radio frequency world down to looking at grounding problems, rather than starting with dc and going up. Leaving the chassis disconnected from the spacecraft is really inviting trouble from some of the other systems, such as receivers or transmitters getting into the systems we are concerned with. There is no ground on the spacecraft that you could make that is any better than the flat plate on which you are mounting the instruments. You cannot carry a wire anyplace and have it be a lower reactance. There are problems quite often at the edges of these plates, where bonding processes are used that are not conductive, and I think this is an area that needs some consideration and some work in future spacecraft. But this low impedance plane on which you mount most equipment is as good a ground plane as you can get without making it bigger. Isolating the instrument from it is more commonly going to create problems, than get rid of them; if not for the immediate system in question, then for some of the other systems on the spacecraft. In your points and precautions summary, item 10 said to ground the shields at as many points as possible and item 5 said to isolate the instrument. These two do not seem quite consistent.

Joseph C. Thornwall: When I talk about grounding shields, I am talking about one side or the other of the isolation transformer that you use to get conductive isolation. Remember that these experiments are inside of another enclosure represented by the spacecraft. Unfortunately, *OSO* for instance, spins and there are panels on the top covers that are insulated, because they want to reduce eddy currents and the drag caused by them. But we are inside of another enclosure. I do not think it would work so well without another enclosure around it.

Albert C. Whittlesey: I am changing the subject because we are nearing the end of this workship and there is one thing that has not been talked about up to this point, which I would like to present for your thoughts. At JPL we use an ac power supply which produces a square wave. This has numerous advantages from the point of view of the EMI engineer. I will explain a few of them. It saves the RFI engineer a lot of RF susceptibility testing time because, whenever it is on the bench and operating with this ac power supply, it has a noise source. All the designers are going to build it so that it will withstand this noise source that they have in the power supply. I think it sounds humorous, but it is very serious because, if you tell the designer that they are going to have a quiet spacecraft, they will not give any thought to noise. When they know that they have this noise, they will work hard to design good circuits so they will not be susceptible to this noise or any other noise that is known to be present. Second, all the user subsystems are guaranteed to have spike isolation at the power inputs because they have a transformer rectifier device there. In our case this is a 50-V peak-to-peak square wave. Thirdly, all the inverters for all the user subsystems are in the same phase because there is only one inverter. So, of necessity they are going to be in phase. There will not be any harmonics or beat frequencies generated.

The principal disadvantage that I can see is that maybe there are some particular experiments that would be basically incompatible with this, try as you may to reduce all the noise. In addition, it will not meet the MIL specs for conducted noise on power lines. The reason I am bringing it up is because I think it is a system that has benefits for the EMI engineer and the spacecraft as a whole, and yet I have seen some power supplies of this type totally rejected in the initial conceptual phase of a project just because the engineers knew it would not meet EMI specs that may have been imposed.

Joseph C. Thornwall: Is this on a balanced system such as a twisted pair which is routed around?

Albert C. Whittlesey: Yes, it has to be balanced. It is balanced on both ends and center-tapped with twisted shielded wires running throughout the spacecraft.

Joseph C. Thornwall: That seems to me like the biggest advantage in a system like that. Unbalance is one of the things that causes us so much trouble. The telemetry signals and the output from the experiment to the interface with the spacecraft being unbalanced seems to be one very bad source of noise. That should be one way of reducing it.

William R. Johnson: I want to agree with both Mr. Thornwall and Mr. Kelkenberg on the advantages of the balanced circuitry. Our low-frequency problems are primarily common mode and primarily they are due to unbalances in the circuitry. My comment earlier, that we put the ground in the center, meant symmetrically in the source or load end. Secondly, I agree also with the second comment that this type of system generally creates problems in the RF region. The thing that we have really got to concern ourselves with is that we take into account, from an engineering standpoint, the differences. There are no good design practices that cover 9 or 10 decades of frequency. A lot of the good design practices books that we go by should have been burned 20 or 30 years ago.

H. T. Howard: I have a general comment that involves all of us. I see rising up the answer to some of these problems being specifications and paper work. This is a great fear to me as a scientist and as a person trying to produce hardware to go on flight programs. For example, when *Voyager* was active, delivery dates quoted were 6 years. Part of the problem is the specifications and paper work involved. We must do the best we can to keep this in check. There are some engineers who can only do specifications and paper work. However, this is a complicated problem. The experiments we are trying to do are complicated and require that top flight people be involved in the details. It requires that they be involved very early and that they be competent to use all of the analytical tools and all of the data available, and use it both in the time and the frequency domains. We have seen some examples here where people have actually taken harnesses and made various measurements in an effort to determine what the situation really is.

Discussion (contd)

We have seen examples in several papers where this work is discarded and a return made to "cut and try." I think this is unfortunate, since you cannot replace the analytical approach with cut-and-try techniques. You cannot replace good people and common sense with paper work and specifications.

The point of this is that I would hope in our getting together here, with the scientific community face to face with the EMC fraternity, that what we get out of it is the awareness that very early in the game we all have to talk together. We understand the spacecraft, or try to. Many of you understand what is going to come out of the spacecraft in the real world. I think we can design around it. Mr. Thornwall has shown some excellent examples. Dr. Miller and Mr. Lie have come across some things that seem obvious once you analyze them. It is important that we all get together early in the program and talk and design around these things; perhaps change the spacecraft, perhaps go to a different power system, but get at them early. Then we can have the specifications and the paper work. Maybe you can make a paper system fly, but before then, it is going to take sharp people, not sharp paper work.

Joseph G. Bastow: In concluding this workshop, I have asked Mr. C. P. Wilson of NASA Headquarters *Mariner* 67 Program Office, which sponsored these sessions, to say a few words.

C. P. Wilson: Mr. Howard just about summed up the whole workshop very neatly. It seems clear to me that it has been very fruitful to have brought together here people who are intimately familiar with spacecraft design, who have experienced problems on GSE, and who are actively engaged with experiments. Looking at the interfaces and exchanging this information I think has been a good thing. It appeared to me that there were surprises on both sides of the aisle. I also got the idea that we really were talking about two different classes of spacecraft. There seems to be one class in which we are making measurements of particles and fields and then there is a class which does not make measurements of particles and fields. The problems appear to be very different. I also heard many times in the papers: the thing you have to do is to get the word to the design engineer very early in the program; and nobody can argue with this. I cannot help but feel that our search for knowledge in the exploration of space is enhanced by this kind of an exchange, and I hope that we can have more that will be equally fruitful.