NASA CONTRACTOR REPORT

NASA CR-1358

NASA CR-1
C. 1

TECH LIBRARY KAFB, NM
0060521

LOAN COPY: RETURN TO
AFWL (WLIL-2)
KIRTLAND AFB, N MEX

PLANETARY FILM RECONNAISSANCE SYSTEM

by Robert Bashe and Ira Schwartz

Prepared by
FAIRCHILD CAMERA AND INSTRUMENT CORP.
Syosset, N. Y.
for Langley Research Center

NATIONAL AERONAUTICS AND SPACE ADMINISTRATION • WASHINGTON, D. C. • JUNE 1969

NASA CR-1358

TECH LIBRARY KAFB, NM

0060521

PLANETARY FILM RECONNAISSANCE SYSTEM

By Robert Bashe and Ira Schwartz

Distribution of this report is provided in the interest of information exchange. Responsibility for the contents resides in the author or organization that prepared it.

Prepared under Contract No. NAS 1-7688 by
FAIRCHILD CAMERA AND INSTRUMENT CORP.
Syosset, N.Y.

for Langley Research Center

NATIONAL AERONAUTICS AND SPACE ADMINISTRATION

For sale by the Clearinghouse for Federal Scientific and Technical Information
Springfield, Virginia 22151 – CFSTI price $3.00

ABSTRACT

Fairchild Space and Defense Systems has designed and fabricated a Planetary Film System (PFS) that incorporates film as the recording medium in conjunction with automatic film processing and a solid state electro-mechanical readout device. The experimental camera-processor-scanner system developed under contract to NASA, Langley Research Center is described. Initial performance evaluation tests are discussed and the direction of continuing effort in the development of such future scientific reconnaissance film systems is indicated. The results of a program extension covering both hardware modification and additional performance testing are described in the enclosed report supplement.

The camera portion of the system incorporates a variable framing rate and a reversible film transport drive. The format is 3 inches by 1 inch, on 35mm film. The processing section utilizes the Fairchild FAIRWEB monobath impregnated web for complete processing and drying of exposed film. The web is encapsulated to prevent evaporation of the processing chemicals, a technique well suited for the processing of film on long duration reconnaissance missions.

The conversion of developed scene images into equivalent time-varying video signals is accomplished by an electro-mechanical scanner which uses precision lead screw drives and a semiconductor source and detector for scanning. The use of a mechanical scanner results in high linearity for film readout. The selectable scan rate is compatible with projected unmanned interplanetary spacecraft data transmission rates. The introduction of solid state linear arrays of sources and sensors can provide high readout data rate capabilities for advanced scientific space missions.

The extensive tests performed during the program extension established the desired performance of the PFS hardware in conformance with the design objectives. In particular, the scanner performance exceeded the goals originally established.

Recent trade studies performed by Fairchild regarding planetary imaging mission objectives and sensor selection have pointed out the desirability of utilizing silver halide film. The experimental hardware which has been designed, fabricated and assembled, can now be utilized for detailed investigations of various film processing and readout design parameters. Knowledge gained by the use of this equipment will represent a significant contribution to the development of film imaging systems for planetary observation and cartographic missions.

ACKNOWLEDGEMENT

This report was prepared under NASA Contract NAS1-7688 for Langley Research Center by Fairchild Space and Defense Systems (FSDS), a Division of Fairchild Camera and Instrument Corporation.

Fairchild Space and Defense Systems is indebted to Messrs. Duncan E. McIver Jr. and Leonard P. Kopia for their guidance and general assistance during the program. Special mention must also be made of the valuable cooperation of other personnel from NASA-Headquarters and Langley Research Center.

The following program personnel contributed significantly to the design and fabrication of the Planetary Film Reconnaissance System and to this final technical report.

Robert Bashe	–	Program Manager
Samuel Abrahams	–	Project Engineer
Paul Reichel	–	Principal Engineer
Ira Schwartz	–	Senior Electrical Engineer
Herman Lindner	–	Senior Mechanical Engineer

The authors are grateful to numerous FSDS personnel who contributed to the program effort. Sincere appreciation is expressed to management and consultant personnel for their advice and review.

TABLE OF CONTENTS

Section	Title	Page No.
	ABSTRACT	iii
	ACKNOWLEDGEMENT	iv
	LIST OF ILLUSTRATIONS	vii
1	INTRODUCTION AND SUMMARY	1
1.1	PROGRAM OBJECTIVES	2
1.2	PROGRAM TASKS	3
1.3	PROGRAM SUMMARY	4
1.4	PROGRAM RECOMMENDATIONS	7
2	EXPERIMENTAL PLANETARY FILM SYSTEM	10
2.1	SYSTEM DESCRIPTION	10
2.2	CAMERA SUBASSEMBLY	18
2.3	PROCESSOR SUBASSEMBLY	23
2.4	SCANNER SUBASSEMBLY	27
3	PFS EVALUATION TESTS	37
3.1	PFS CAMERA TESTS	37
3.2	PFS FAIRWEB PROCESSOR TESTS	42
3.3	PFS SCANNER TESTS	45
4	ADDITIONAL PFS CONSIDERATIONS	47
4.1	ADVANTAGES OF FILM SYSTEMS	48
4.2	GEOMETRIC FIDELITY	50
4.3	IMAGE RECONSTITUTION	54
4.4	IMAGE MOTION COMPENSATION TECHNIQUES	57
4.5	FAIRWEB PROCESSING	59
4.6	SOURCE/DETECTOR SURVEY	62

TABLE OF CONTENTS
(Continued)

Section		Title	Page No.
5	SUPPLEMENT:	PFS MODIFICATION AND EVALUATION	64
5.1	TASK 1	CAMERA TRANSPORT MODIFICATION	65
5.2	TASK 2	FAIRWEB AND LABORATORY IMAGERY	69
5.3	TASK 3	PROCESSOR DESIGN IMPROVEMENTS	70
5.4	TASK 4	SCANNER SOURCE AND DETECTOR CIRCUITRY IMPROVEMENT	71
5.5	TASK 5	SCANNER SOURCE AND DETECTOR SURVEY	78
5.6	TASK 6	SCANNER SPOT SIZE AND RESOLUTION TESTING	80
5.7	TASK 7	SCANNER FILM TRANSPORT MODIFICATION	83
5.8	TASK 8	SCANNER FRAME PLATE SYNCHRONIZATION	84
5.9	TASK 9	SCANNER METRIC ACCURACY CAPABILITY	85

LIST OF ILLUSTRATIONS

Figure No.	Title	Page No.
1	PLANETARY FILM SYSTEM BREADBOARD	14
2	PFS CONTROLS FUNCTIONAL BLOCK DIAGRAM	16
3	PFS CAMERA AND PROCESSOR STATIONS	19
4	PFS CAMERA AND PROCESSOR MECHANICAL SCHEMATIC	20
5	PFS CONTROL ELECTRONICS AND DRYER PANELS REMOVED SHOWING PROCESSOR WEB DRIVE AND ACTUATING MECHANISM	25
6	PFS FILM SCANNER SUBASSEMBLY	28
7	SCANNER MECHANICAL LAYOUT	29
8	SPECTRAL DENSITY CURVE FOR SO-243	36
9	PFS CAMERA TEST EXPOSURES – LAB PROCESSING	43
10	PFS CAMERA TEST EXPOSURES – FAIRWEB PROCESSING	44
11	COMPARISON OF FAIRCHILD FAIRWEB PROCESSING WITH KODAK D-76 PROCESSING FOR SO-243 HIGH DEFINITION FILM	61
12	PFS PHOTOGRAPHY - EXPOSURE: 1/50 SEC; f/8	66
13	PFS PHOTOGRAPHY - EXPOSURE: 1/50 SEC; f/11	67

LIST OF ILLUSTRATIONS
(Continued)

Figure No.	Title	Page No.
14	PFS PHOTOGRAPHY - EXPOSURE: 1/50 SEC; f/16	68
15	LIGHT SOURCE DRIVER CIRCUITRY	73
16	SCHEMATIC OF DETECTOR CIRCUITRY	75
17	TYPICAL DETECTOR OUTPUT SIGNAL WAVE-FORMS VS. FILM TRANSMITTANCE	76
18	DETECTOR SIGNAL AMPLITUDE VS. FILM TRANSMITTANCE	77
19	SCANNER OUTPUT FOR GROUP +6 TARGET	82
20	SCANNER SQUARE WAVE RESPONSE	83

PLANETARY FILM RECONNAISSANCE SYSTEM

By Robert Bashe and Ira Schwartz
Fairchild Space and Defense Systems

SECTION 1 - INTRODUCTION AND SUMMARY

The successful use of film systems in spaceborne reconnaissance missions has provided impetus for the development of an experimental scientific reconnaissance film system which is unique in that the readout is accomplished with a small, light weight, two axis electro-mechanical film scanner using a solid state light source and a solid state light sensor.

In general, film systems provide the highest resolution imagery obtainable, wide area coverage, format selectability, self-contained data storage and data readout flexibility. The highly accurate mechanical lead screw film scanner approach offers growth potential in the area of geometric fidelity in readout, which is essential for the successful accomplishment of future missions involving the mapping of the lunar and planetary surfaces.

This report describes the experimental camera-processor-scanner system designed and fabricated by Fairchild Space and Defense Systems for the NASA-Langley Research Center. The results of initial performance tests and recommendations for future system development are presented. The results of program extension, which included hardware modification and extensive evaluation testing, are described in the enclosed Report Supplement.

The objectives and major tasks of the overall program are described in this introductory section. A brief summary of program results and recommendations is also included.

1.1 PROGRAM OBJECTIVES

The objectives of this overall program have included the design, fabrication, assembly, test and evaluation of a breadboard Planetary Film System (PFS), consisting basically of a camera, processor and scanner with an integral film transport mechanism. The complete system was to be operated in a laboratory environment to demonstrate the use of advanced film processing and scanning techniques suitable for future lunar or planetary scientific reconnaissance missions.

The PFS hardware was to incorporate a medium resolution camera lens, FAIRWEB monobath saturated web processing and a solid state mechanical drive film scanning device. The PFS laboratory unit was to be used to obtain photography under various lighting conditions and at various rates. Processing and scanning of selected exposed portions of the film were to be accomplished.

Image motion compensation (IMC) techniques and methods for reconstruction of scanned imagery were to be considered, but not developed for inclusion in the experimental PFS hardware.

The program was extended to include additional tasks involving hardware modification, investigation and evaluation.

1.2 PROGRAM TASKS

This section summarizes the tasks performed under the original terms of the Planetary Film Reconnaissance System contract.

Task 1. Planetary Film System Breadboard Design

a. Camera Assembly: Design and fabrication of an experimental camera with the capability of providing photography under varying lighting conditions at selectable cycling rates and frame numbers per sequence.

b. Film Transport Mechanism: Design and fabrication of an experimental film transport mechanism capable of transporting film from a supply cassette, through the camera assembly, processing station, mechanical scanner, and to a takeup cassette for storage. The film transport contains provisions for reversing the film motion and is capable of calling up various film segments on command for picture taking, processing, or scanning purposes.

c. Film Processor Assembly: Design and fabrication of a FAIR-WEB saturated web processor (SWP) and dryer for the experimental breadboard system.

d. Film Scanner Assembly: Design and fabrication of an experimental solid state mechanical drive film scanner. Evaluation of the use of a monochromatic light source with Kodak Type SO-243 film.

Task 2. Planetary Film System Breadboard Integration and Evaluation

Integration, debugging and testing of the experimental system and breadboard assemblies fabricated in Task 1.

Task 3. Additional System Considerations

Consideration of methods of reconstructing photographs from signals generated by the scanning readout assembly, the effect of system geometric non-linearities or distortions on the use of reconstructed photographs and methods of equipping the film platen with IMC.

1.3 PROGRAM SUMMARY

The primary tasks of study, design, fabrication and assembly of an experimental PFS have been successfully completed. The camera, processor and scanner stations have been debugged and operation has been demonstrated.

The resolution capability of the 6 inch f/2.8 Schneider Xenotar lens when used in combination with Type SO-243 film was determined to be 117 line pairs per mm on axis for high contrast targets. Results of the lens-film resolution tests are included in this report.

Initial camera test runs were made and imagery was obtained to allow comparison of laboratory hand processed film to automatic FAIRWEB processing. As a result of these early tests, camera and processor modifications were made to improve the performance of the original design implementation. Additional film transport and processor web separation design changes were made during the program extension period. Sample PFS photographic imagery is presented in this report and in the supplement.

An industry source/detector survey was conducted during the

program to ensure that the components selected were representative of the current state-of-the-art technology. Component selection and optical design for the scanner were derived from laboratory tests. An alternate GaAs light emitting diode, rated at approximately twice the power output of the one used for the laboratory bench test setup, was obtained toward the latter part of the program.

A densitometric test for a monochromatic scanner light source was performed to determine the density variations to be expected as compared to the normal ASA diffuse density curve.

Scanner operational tests revealed the need for certain modifications and improvements. The scanner controls were modified so as to synchronize the film flattening plate drive directly to the line indexing carriage. Additional modifications of the camera, processor and scanner subassemblies were incorporated during the program extension period.

Extensive tests of scanner performance, particularly regarding its dynamic range, resolution, and geometric fidelity capability, were accomplished during the program extension. The results of these tests demonstrate the success in completely satisfying and exceeding original design goals set for the experimental Planetary Film System.

In summary, the experimental film reconnaissance system developed for NASA - Langley Research Center by Fairchild Space and Defense Systems is available for detailed performance evaluations of ad-

vanced techniques for film processing and readout. The system has been designed to serve as a flexible, easily accessible research unit which allows exposure of frames at various cycling rates, processing and readout of selected frames, readout in laboratory ambient light and readout at selected rates and selected resolutions. The processing technique used in the experimental model is suitable for long duration space missions and the precise lead screw drive readout scanner concept can provide extremely high metric accuracy.

1.4 PROGRAM RECOMMENDATIONS

A brief summary of recommended program efforts for the next phase of PFS development are presented below. Included are tasks consistent with a minimum recommended follow-on program effort, which if sponsored and pursued in a timely manner would permit the development of space hardware in time for missions in the early 1970's.

The potential application of the PFS to future planetary, lunar and earth satellite mapping programs, as an alternate to film retrieval, makes it imperative to continue both the development and evaluation of the device. In addition, equipment must be developed to permit reconstitution of the scanned imagery and tests must be performed to permit an assessment of the metric fidelity of the readout. Further development of source driver and detector electronics circuitry is needed to extend the dynamic range of the scanner and to allow a greater signal operating margin. The use of linear arrays of solid state sources and detectors to provide wide bandwidth data readout rates should be investigated.

The major tasks recommended for PFS program continuation include:

1. Design and fabrication of equipment capable of reconstituting the photographs from signals generated by the scanner readout assembly, to permit evaluation of the PFS and demonstrate its performance.

2. Extensive testing of the PFS breadboard including the evaluation of critical performance parameters and long term operation. Determination of: source and detector stability as a function of varied electrical parameters and time, long term effectiveness of FAIRWEB, system performance for various targets including high/low contrast, and multi-spectral effects of system operation on film over extended time periods.

3. Feasibility study to provide increased scanner bit rate capability (which will be required for future missions) through the use of solid state linear array techniques for illumination and sensing.

4. Cartographic system error analysis of a potential design configuration. Comparison of PFS system mapping capabilities with systems employing electronic scan techniques and other processing methods (e.g., Lunar Orbiter system).

To supplement the recommended hardware development tasks and to permit a logical, orderly space system development program, various supporting tasks also should be considered. In particular, for anticipated missions, system analyses related to specific sensor subsystem

requirements should be performed. Scientific mission objectives and imaging system configurations and requirements should be established as early as possible. Detailed imaging system studies should be conducted to parametrically determine requirements for system parameters such as format size, film length, shielding, resolution, dynamic range and metric accuracy. In addition, consideration should be given to techniques and requirements for image motion compensation, automatic exposure control, data annotation and a dual resolution coarse/fine data readout capability.

SECTION 2

EXPERIMENTAL PLANETARY FILM SYSTEM

This section describes the experimental PFS hardware developed for system demonstration, test and evaluation. The resulting hardware is a relatively compact photo subsystem, packaged in two readily separable units, with a simple, easily removed control panel, on which the bulk of the control electronics circuitry is mounted. Thus, the experimental hardware unit provides the flexibility necessary for the development and evaluation of new techniques.

2.1 SYSTEM DESCRIPTION

The overall system operation and performance, including the mechanical and electrical implementation is described in this subsection, with the three major subassemblies discussed in more detail in the following subsection.

2.1.1 PFS Functional Operation and Performance Summary

The experimental PFS hardware was developed to demonstrate, in a laboratory environment, the functions required of a complete high resolution planetary reconnaissance film system including picture taking, processing and film scanning. The unique features of this system include FAIRWEB processing and a readout subsystem which incorporates a two axis electro-mechanical film scanner using a solid state light source and sensor.

The camera portion of the system is a frame camera that utilizes an off-the-shelf Schneider Xenotar 6-inch, f/2.8 lens with moderate performance capability. The camera framing rate is variable and the film transport drive is designed to allow for both forward and reverse film motion. The format is 3 inches by 1 inch, on standard 35mm perforated Kodak Type SO-243 film. A platen is used that can incorporate additional film flattening capability by means of vacuum.

The processing section provides the capability of complete processing and drying of film exposed in the camera portion of the breadboard system. The reversible film transport permits the processing of any portion of the film on command. The Fairchild FAIRWEB monobath impregnated web performs the film processing function. The web is encapsulated to prevent evaporation of the processing chemicals during long duration planetary reconnaissance missions.

The conversion of developed scene images into equivalent time-varying video signals is accomplished by the electro-mechanical scanner. The scanner uses a precision lead screw drive to provide the line scanning of the 3 inch wide format. A Gallium Arsenide light emitting diode source provides continuous radiation through the film at a wavelength of 0.9 microns. The amplitude-modulated signal that results from transmission through the scene imagery is detected by a phototransistor that is matched in spectral sensitivity to the output of the light emitting diode. A spot size

of 1/4 to 1/2 mil diameter is achieved by a 40 to 1 optical minification of the source limiting aperture. The source and sensor, rigidly mounted on a precise carriage, are driven by a synchronous motor for line scanning; a pulsed stepper motor accurately indexes the carriage to the next scan line. Line spacing is either 1/4 mil or 1/2 mil; the line scan rate is determined by gearing and motor speed.

The Planetary Film System characteristics are summarized in Table 1.

2.1.2 PFS Mechanical Implementation

The PFS breadboard shown in Figure 1, includes two housings which are latched together to form the complete system. The upper housing, which is 15" x 17" x 11 1/2", contains the camera, scanner, and system controls. The rear cover of this unit also serves as the control panel for the system. The covers of both units are mounted with quick disconnect fasteners for rapid installation and removal.

The lower housing, which is 15" x 17" x 13 1/2", contains the processor, FAIRWEB supply and film dryer. The interface connections between the two housings consist of an electrical ribbon type connector which mates automatically as the two units are brought together, and a timing belt which is installed manually. Four heavy duty quick release latches hold the units together. The units can be separated, and run individually if desirable for testing purposes.

TABLE 1

PLANETARY FILM SYSTEM CHARACTERISTICS

CAMERA ASSEMBLY (Including film transport)

1. Lens: Schneider Xenotar, 150mm, f/2.8.
2. Photography at various cycling rates: 15, 30, 60 sec/frame.
3. Manual control of frame bursts.
4. Resolution goal: 80 lp/mm.
5. Reversible film transport.
6. Indexing of desired film frame.
7. Film flattening, if required.
8. No IMC mechanism on the breadboard.

PROCESSOR ASSEMBLY

1. FAIRWEB processing.
2. Process and dry selected frames.
3. WEB contact only during processing.

SCANNER ASSEMBLY

1. Source: GaAs; detector: Si phototransistor.
2. Variable line scan rate.
3. Variable line advance.
4. Scan any segment of film on command.
5. Scanning in ambient light.
6. Dynamic range goal: (100:1)

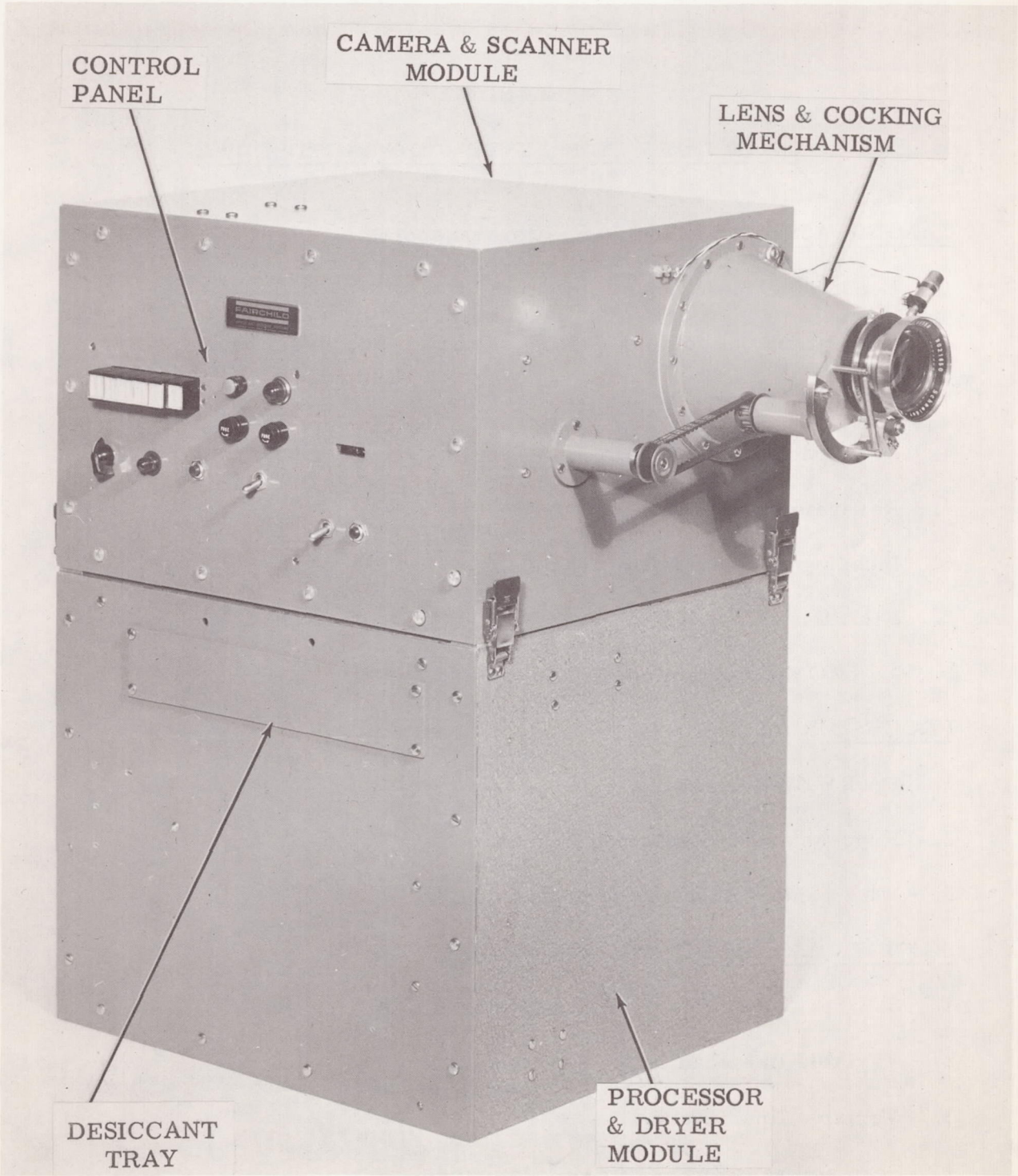

FIGURE 1. PLANETARY FILM SYSTEM BREADBOARD

2.1.3 PFS System Controls

The control panel, located on the rear cover of the upper housing, contains all of the switches and indicators needed to operate the system in its various modes of operation. Figure 2 represents the system controls functional block diagram. The mode switch provides for selection of any one of the five basic operational modes: 1) picture taking, 2) processing, 3) scanning, 4) reverse and 5) forward index. Positive interlock is provided on this switch to preclude operation of more than one mode at a time. The power-on switch provides the system with the voltages necessary for operation: 115VAC, 60 Hz; +28VDC; and ±10VDC. Fuses are located on the control panel for the AC power and +28VDC.

The picture taking cycle has three rates of operation with imaging once every 15, 30, or 60 seconds. The rate is selectable by means of the intervalometer switch located on the control panel.

A twelve-minute drying period is needed after the processing mode switch has been placed to the off position. A panel lamp provides an indication of this continuing processing operation after the processing mode switch has been placed in the off position.

In the scanning mode, a separate momentary pushbutton switch is provided to activate the line scan motor at the beginning of a frame. This is required since the line scan motor automatically stops at the completion of a frame. When the scanning mode is activated, +28VDC and ±10VDC

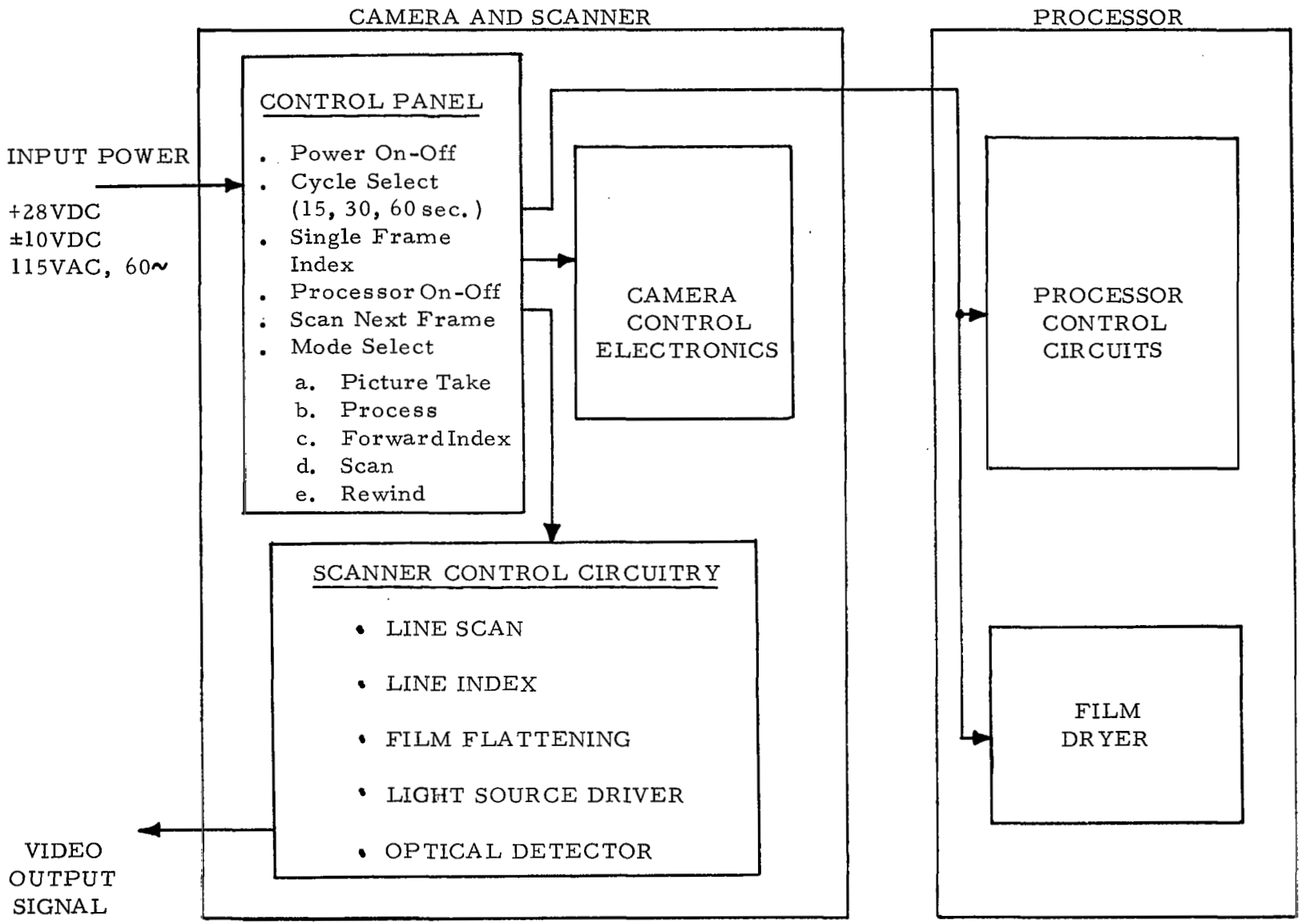

FIGURE 2. PFS CONTROLS FUNCTIONAL BLOCK DIAGRAM

power is applied to the source driver and photodetector electronics.

In the forward index mode, an additional momentary pushbutton switch is provided to cycle the system one complete frame. This provides the indexing capability needed to sequence frames into the scanner. Ordinarily, after scanning of a complete frame takes place, the scanner controls are automatically de-energized and the mode switch is placed to the off position. The forward index mode then provides the means for moving the next frame into the scanner and scanning continues as soon as the scanning mode is again energized.

2.2 CAMERA SUBASSEMBLY

The camera subassembly uses 35mm perforated SO-243 film and has a 1" x 3" format. It is operated in an autocycle mode at any of three selectable cycling rates; i.e., 15, 30 or 60 seconds. The camera station for the PFS is shown in Figure 3.

The camera subassembly functions and its design implementation are described in the following paragraphs.

2.2.1 Camera Mechanical Implementation

The camera section of the system consists of a 6", f/2.8 Schneider Xenotar lens, a platen which is designed for vacuum film flattening, a motorized sprocket transport system, and supply and takeup spools. Figure 4 represents a mechanical schematic of the camera and processor.

The transport system is driven through a slip clutch by a constantly rotating motor. After receiving a pulse from the system control unit, the platen is raised, a solenoid unlatches the one revolution/cycle shaft, causing the shutter to cock and allowing the metering sprocket to advance the proper amount of film into the format area. The one revolution shaft is then relatched, and the platen is lowered. This metering operation is accomplished in six seconds. A pulse, supplied by the system controls to the shutter trip solenoid, actuates the lens shutter at the predetermined cycling rate. The camera is then recycled.

Since the film is always engaged in a sprocket, and the relationship

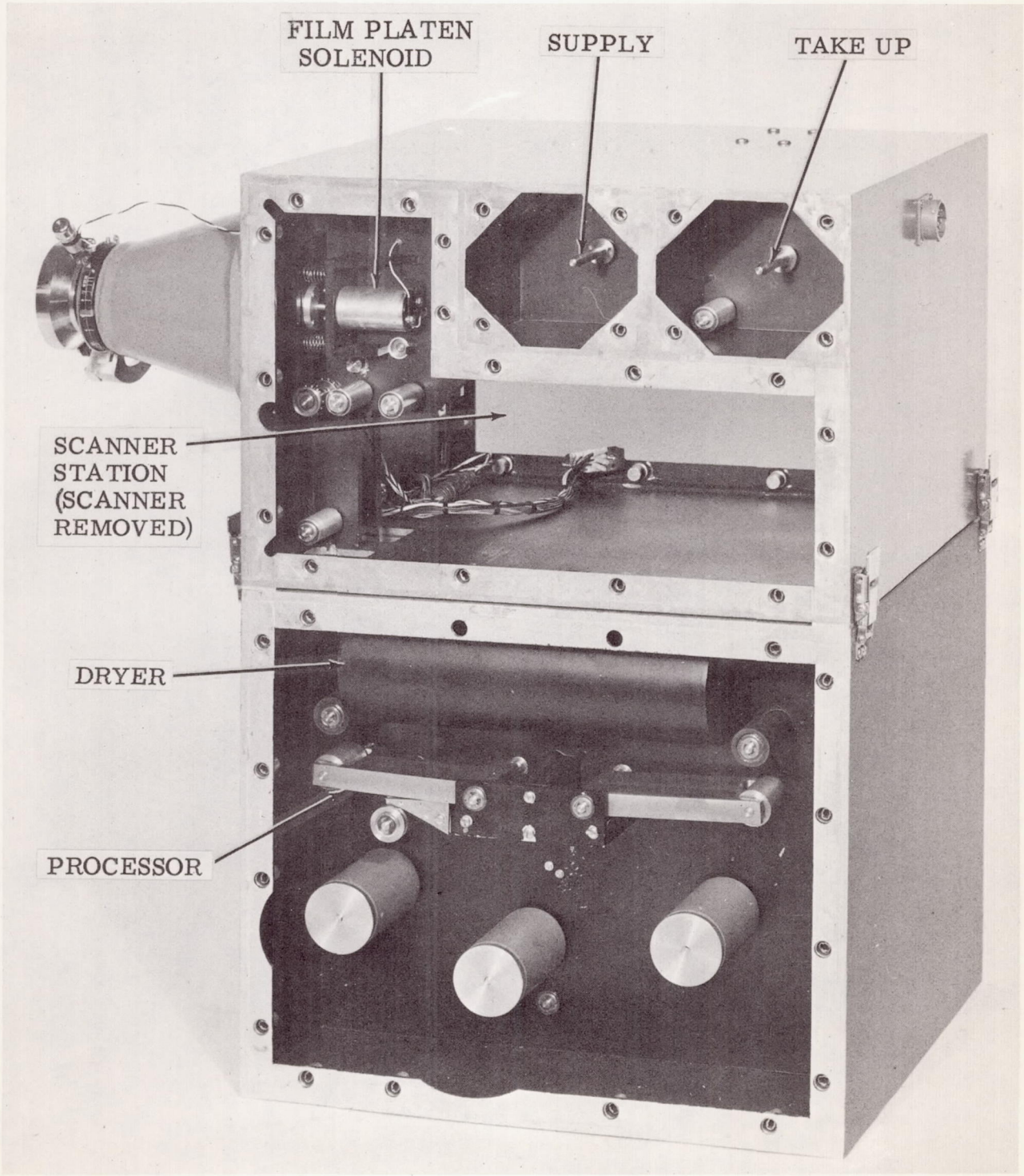

FIGURE 3. PFS CAMERA AND PROCESSOR STATIONS

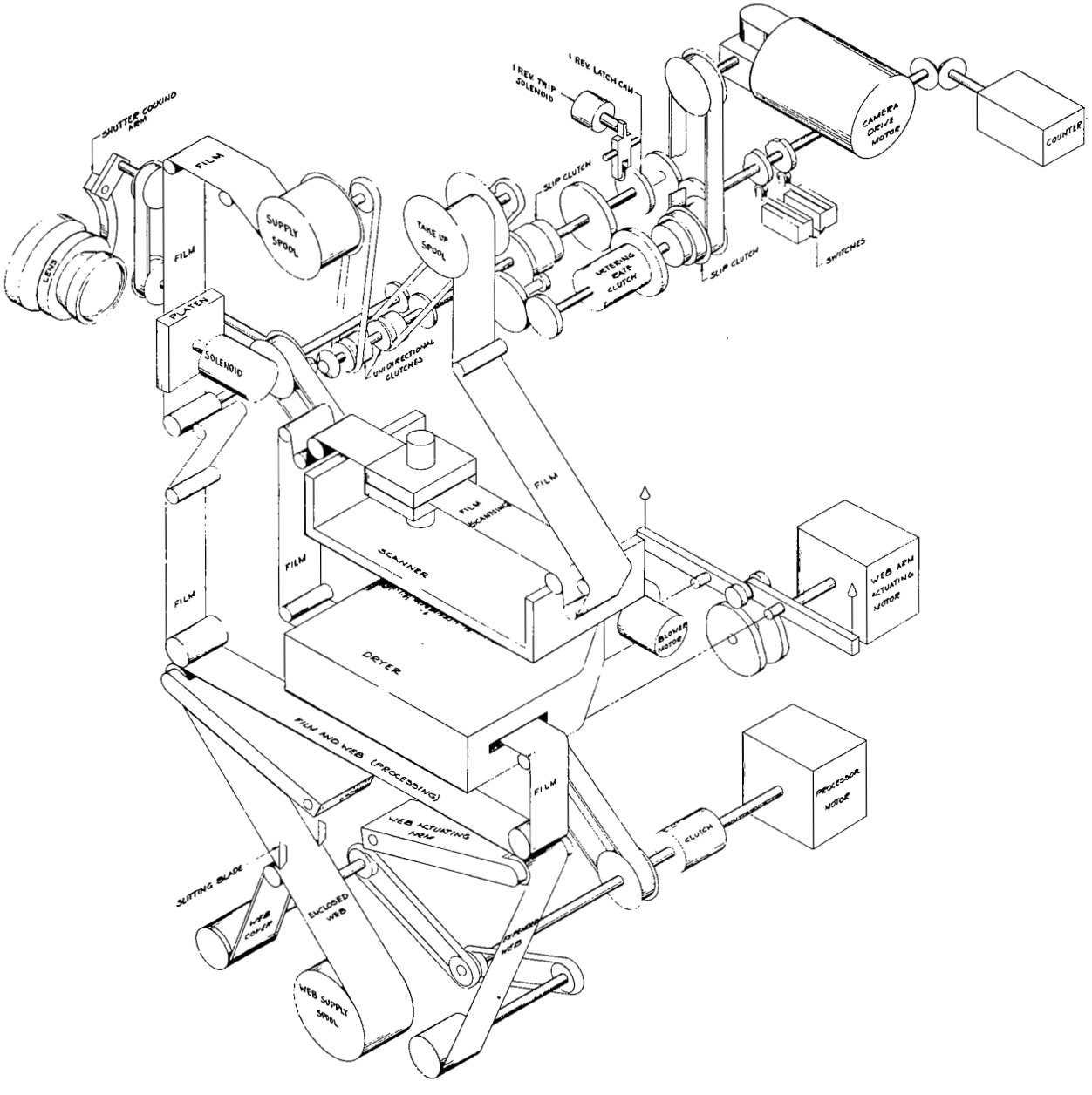

FIGURE 4. PFS CAMERA AND PROCESSOR MECHANICAL SCHEMATIC

between the sprocket and the one revolution latch is fixed, it is possible to index a given frame into any station of the camera, scanner, or processor by monitoring the counter on the one revolution shaft. A clutch in the transport system permits the metering sprocket to be reversed for film rewind. The rewind rate is ten times faster than the metering rate.

The supply and takeup spools are located in separate light tight compartments. The supply spool must be loaded in a darkroom, but the remainder of the threading procedure may be accomplished under ambient light conditions.

The spools are independently driven through unidirectional clutches and spring belts. Only one spool can drive depending on the mode selected (metering or rewind).

2.2.2 Camera Electrical Implementation

The camera control electronics employs relay logic to accomplish the necessary camera functions during the picture taking cycle. The camera timing is derived from the one revolution/cycle shaft by a cam activated switch. An intervalometer, with a panel mounted switch, allows the operator to select one of three different camera cycling rates, 15, 30 or 60 seconds.

Upon application of power to the camera subassembly, the transport motor and metering rate clutch are immediately energized. The cam activated switch on the one revolution shaft delivers a pulse to the camera intervalometer in accordance with the selected cycling rate. At the end of the

selected interval, the shutter trip solenoid is energized and the lens shutter is fired, imaging the scene. After a short delay, the one revolution solenoid is energized, unlatching the one revolution/cycle shaft, and the film is then transported for six seconds. During the film transport interval, the platen drop solenoid is energized to raise the platen and provide clearance for the film.

The time delay circuitry for the intervalometer, one revolution solenoid, and platen drop solenoid utilize unijunction relaxation oscillator timers that pulse relay drivers; these relays in turn supply +28VDC power to the proper solenoid.

2.3 PROCESSOR SUBASSEMBLY

The processor in the PFS system develops, fixes and drys the film containing the photography taken by the camera. Developing and fixing is done by applying FAIRWEB to the exposed film, maintaining contact for four minutes and then separating the FAIRWEB from the film. The Fairchild FAIRWEB monobath impregnated processing web is ideal for use on planetary reconnaissance missions, where extreme long life characteristics under adverse environmental conditions are required. The web structure is inert, and is capable of carrying a higher percentage by volume of processing chemicals than any other web material currently available. Fairchild has stored FAIRWEB for over two years without performance degradation.

To provide protection from evaporation, the impregnated processing web is kept encapsulated until the exposed film is ready for processing. When the processing cycle commences, the encapsulation package is cut open and the web is brought into contact with the exposed film. The FAIRWEB used in the PFS hardware is encapsulated in metallized mylar for long term storage. A more detailed description of FAIRWEB saturated web processing is provided in Section 4.5. Refer to Figure 3 for a view of the processor station.

The processor functions and its design implementation are described in the following paragraphs.

2.3.1 Processor Mechanical Implementation

The processor section of the system (refer to the mechanical

schematic, Figure 4) consists of a drive system for the FAIRWEB processing material, a drive for actuating the applicator arms, and a dryer.

When the processor is activated, the applicator arms lift the FAIRWEB material and apply it to the film by means of the two rollers at the ends of the arms. At the same time that the processor drive motor and the dryer blower are started, the processor motor, in addition to driving the FAIRWEB, is clutched into the camera transport system to synchronize the speed of the film with the FAIRWEB material. The processing drive speed is 3 inches/min. The processor drive mechanism is shown in Figure 5.

Prior to applying the FAIRWEB to the film, the web encapsulating material is slit open by two blades and wound onto a takeup spool. The exposed web is then applied to the film and travels in contact with it for four minutes, before being wound up on a takeup spool. The film then enters the dryer. Ambient air, blown through a silica gel filled tray, is recirculated around the film which travels through the dryer at a speed of 3 inches/min. The desiccant tray is easily accessible for inspection or refilling.

When the processor is shut off, the applicator arms pivot down, separating the FAIRWEB from the film. The web drive is stopped by declutching it from the processor drive, but the latter drive continues to move processed film through the dryer until the last frame of processed film is dried.

2.3.2 Processor Electrical Implementation

Processing of the film is started when the processing mode switch is

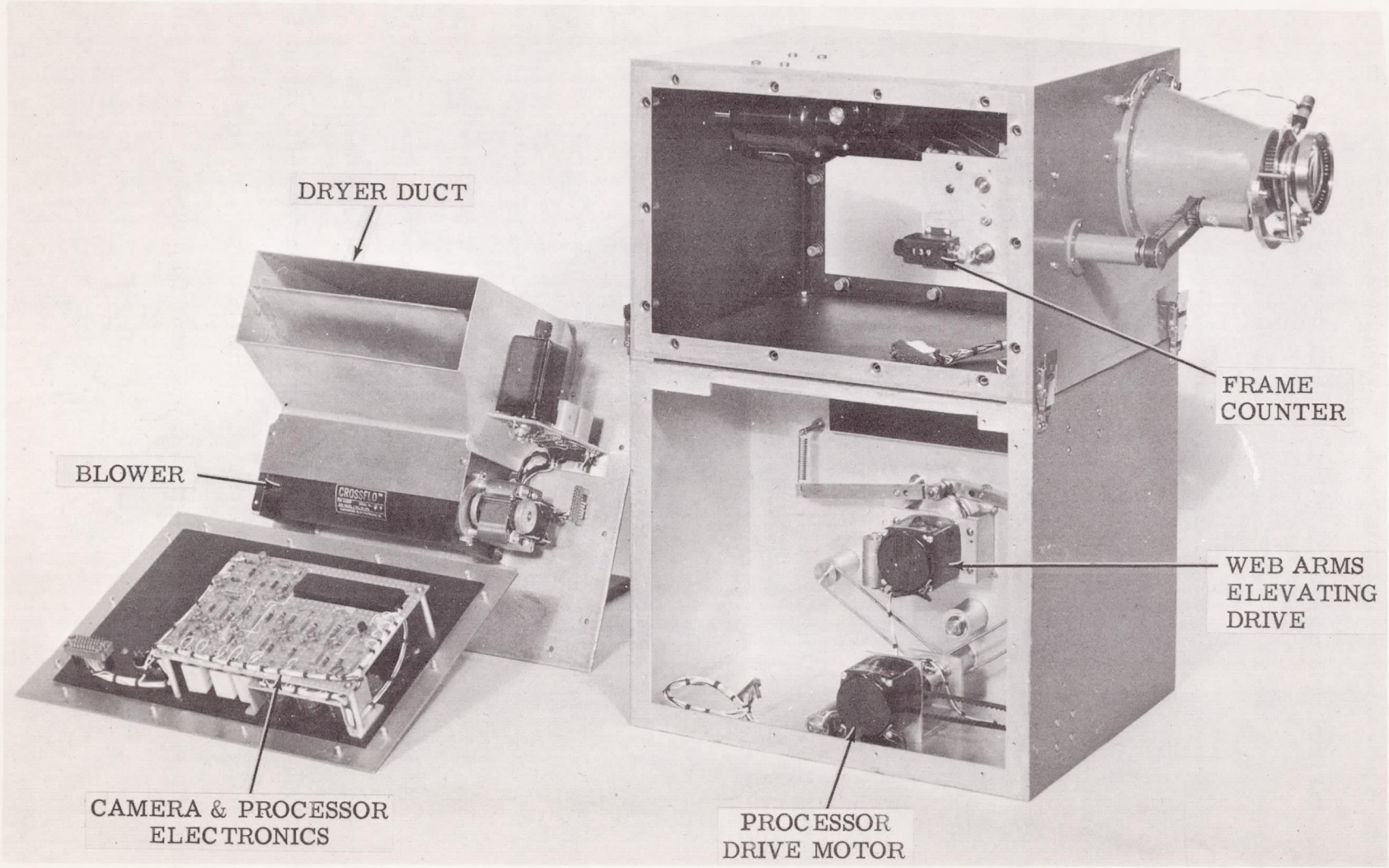

FIGURE 5. PFS CONTROL ELECTRONICS AND DRYER PANELS REMOVED SHOWING PROCESSOR WEB DRIVE AND ACTUATING MECHANISM

depressed. Upon activation of this mode, the applicator arms raise the FAIR-WEB material into contact with the film. The applicator arm drive motor is energized through two limit switches. The engage switch drives the arms upward; the disengage switch shuts off the drive when the FAIRWEB is separated from the film. As the FAIRWEB is placed in contact with the film, the processor drive motor, web drive clutch and dryer blower are energized through the closed contacts of the process relay. Processing action continues as long as the mode switch remains depressed in the processing position.

When the processing operation is stopped, the applicator arm motor, which drives the FAIRWEB downward and away from the film, is energized through the disengage limit switch, the normally closed contacts of the processor power relay and the closed contacts of the process relay. The web drive is stopped by removing +28VDC power from the web drive clutch. An adjustable time delay relay performs the timing function to permit the processor drive motor and dryer blower to continue their operation for approximately twelve minutes so that all the processed film can be moved through the dryer. At the end of twelve minutes, the processor drive motor and dryer blower revert to the off condition and the processor subassembly is ready for a new processing cycle. An indicator lamp on the control panel operates during this twelve minute period to alert the operator to the fact that although the mode switch is in the off position, film drying is still going on.

2.4 SCANNER SUBASSEMBLY

The scanner is the last station of the PFS system, and its function is to readout the processed photographs. This is accomplished by projecting a 1/4 mil diameter scanning spot through the film and monitoring the brightness of the spot with a phototransistor detector. The scanning spot is driven along the three inch length of the format, then stepped perpendicularly 1/4 mil and driven back. This procedure is repeated until the complete 1" x 3" format is scanned. The PFS scanner subassembly is illustrated in Figure 6.

The scanner functions and its design implementation are described in the following paragraphs. In addition, densitometric data is presented to indicate the effect of using monochromatic light to scan imagery.

2.4.1 Scanner Mechanical Implementation

The scanner for the PFS system is an opto-mechanical device with a solid state source and detector. It consists of a carriage for line scanning and a subcarriage for line indexing, with individual drives for each carriage. In addition a film flattening plate mechanism is used. The scanner mechanical layout is shown in Figure 7.

The source and detector optical system is mounted on the indexing subcarriage. The system consists of a GaAs light emitting diode, a phototransistor detector, a reticle, a lens system for demagnifying the reticle spot, and a lens system for remagnifying the spot for the detector.

The optics for the scanner are mounted in two tubes which straddle

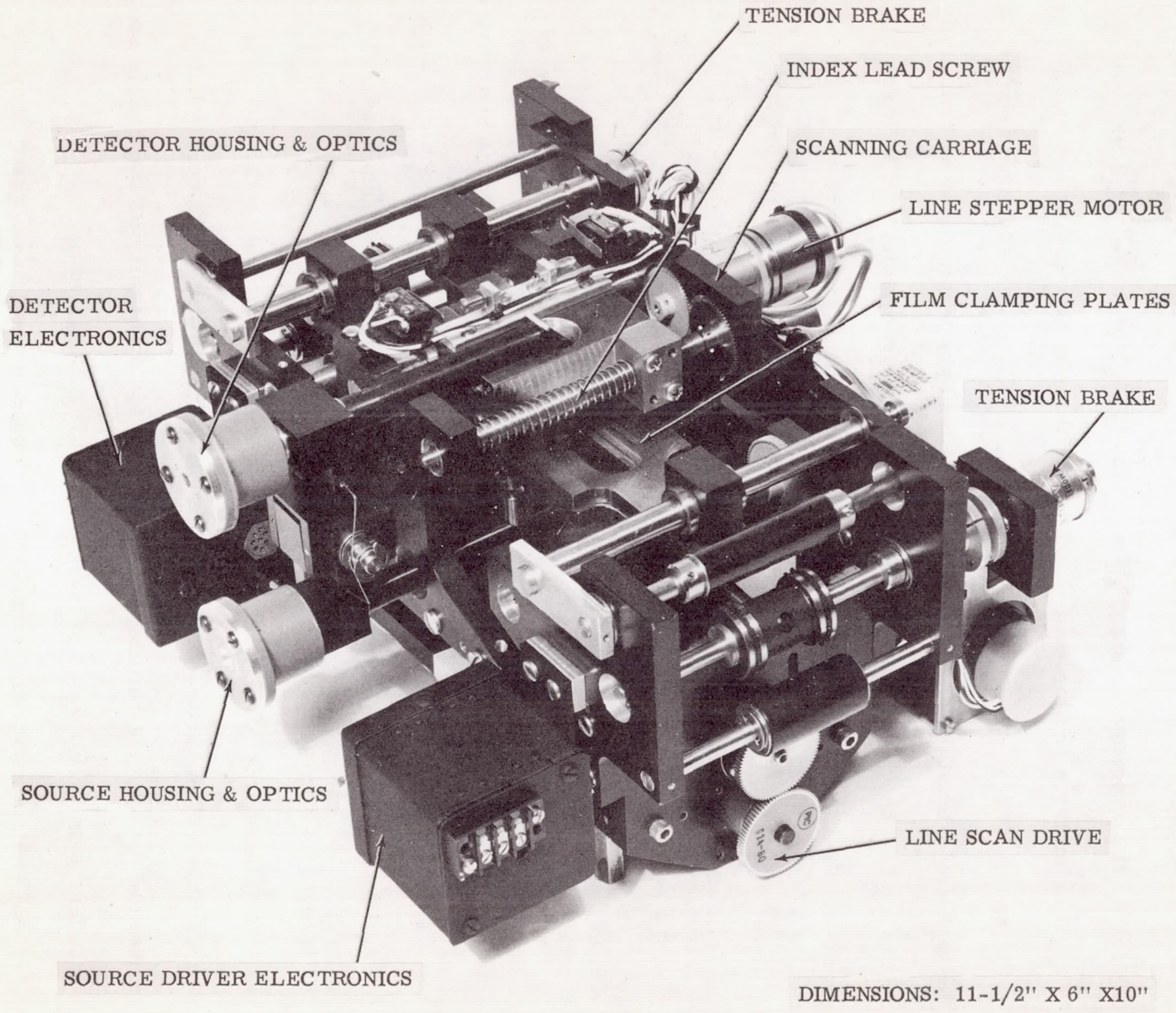

FIGURE 6. PFS FILM SCANNER SUBASSEMBLY

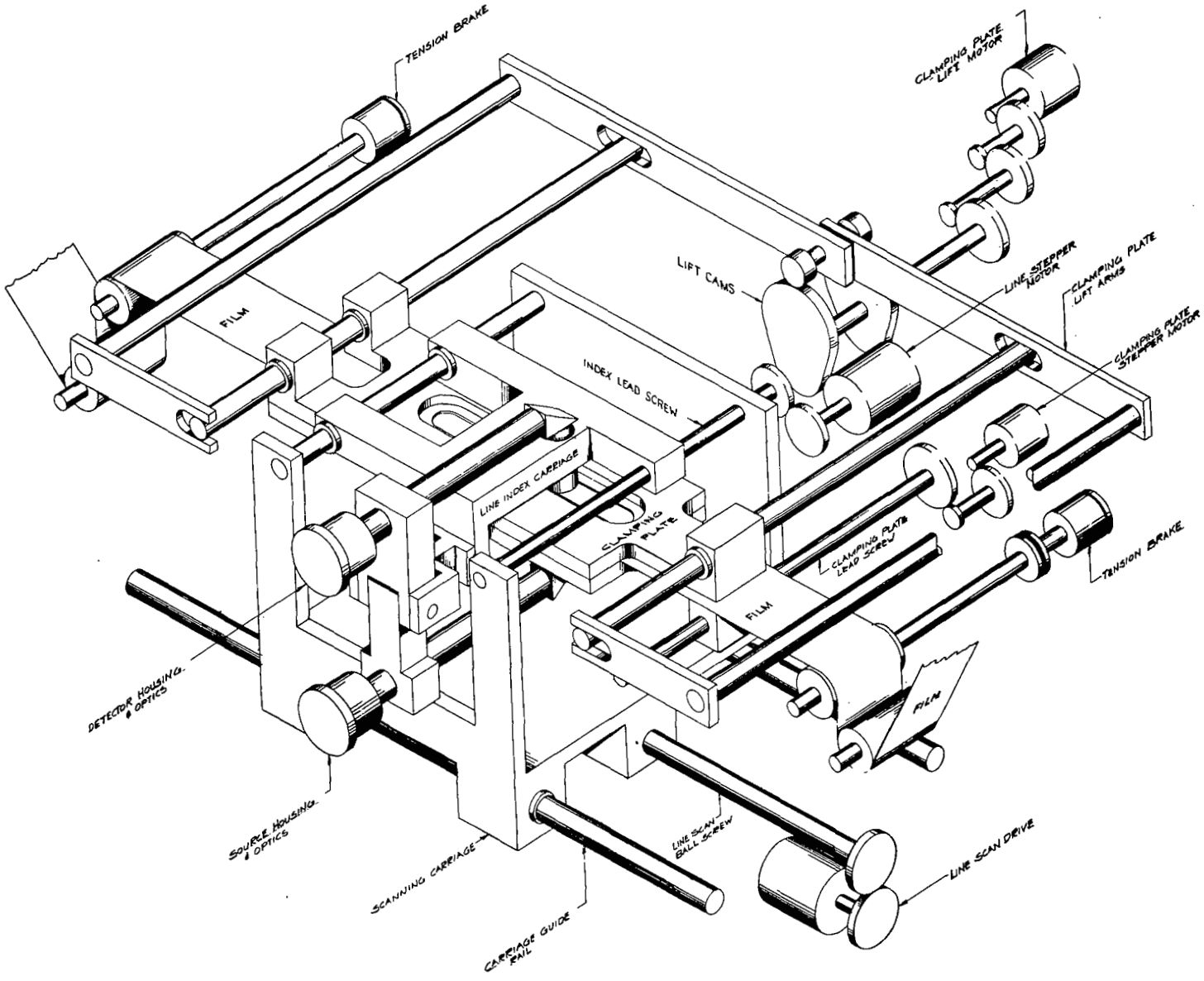

FIGURE 7. SCANNER MECHANICAL LAYOUT

the film. The lower optical tube contains the GaAs diode, a reticle with a 0.01 inch spot, a mirror for folding the optical path and a Nikon 40 power microscope objective for demagnifying the 0.01 inch reticle spot to the 1/4 mil diameter. This microscope objective is uncorrected, since the projection is done directly onto the emulsion side of the film.

The upper tube houses the photo detector, a mirror for folding the light path and a Nikon 40 power microscope objective. Since these optics are located on the opposite side of the film from the emulsion side, the microscope objective is corrected for the thickness of the film. The purpose of this system is to remagnify the spot after it passes through the film, and to focus it on the sensitive area of the phototransistor. The optical system position is completely adjustable and the lenses are adjustable for focus.

The line scan carriage is driven by a hysteresis motor through a ball lead screw. The carriage is guided on two accurately ground rails by ball bushings mounted to the carriage base. A negator spring is used to apply a constant load in one direction and eliminate end play from the drive. The line index carriage, which carries the source and detection systems is mounted on the line scan carriage and travels with it. At the end of each line scan, this index carriage is indexed to the next line by means of a geared down stepper motor actuating a lead screw. This drive also has end play removed by means of a loading spring.

The film flattening plates are normally kept in an open position with

a gap of 1/8 inch for film clearance. When a photograph is fed into the instrument for scanning, these plates are clamped together by means of a set of cams and lever arms, which are driven by a stepper motor. The film is clamped by the plates until 400 1/4 mil lines (or 200 1/2 mil lines) have been scanned, at which time the plates open, and index to a new position. The indexing is accomplished by a stepper motor and lead screw in a manner similar to that of the line index carriage.

In order to avoid film movement during the complete frame scan cycle, a sprocket at the entrance, and one at the exit of the scanner lock the film in place. A small brake coupled to each of the sprocket shafts provides the locking action.

2.4.2 Scanner Electrical Implementation

The functions of the scanner subassembly electronics include:

1) Control of the movement of the line scan carriage and line index carriage.
2) Control of the movement of the film flattening plates.
3) Activation of the solid state, GaAs light emitting diode source.
4) Detection and amplification of the light transmitted through the film to provide an analog output signal of the density variations in the photographic imagery.

When the scanning mode is activated, the scanner power relay provides 115VAC, 60 Hz, +28VDC and ±10VDC power to the scanner

subassembly. Line scanning begins immediately, with the line scan carriage driven by the hysteresis line scan motor. When the line scan carriage reaches the end of the scan line, a limit switch de-energizes the scan motor and activates the line index carriage to move to the next line. The index carriage is driven by a permanent magnet stepper motor which moves it approximately 1/4 mil, equivalent to the scanning spot size. As soon as stepping has occurred, the line scan motor is energized to drive in the reverse direction thus moving the line scan carriage back across the frame. When a complete frame has been scanned out, the line scan motor is stopped automatically. A new frame is moved into the scanner and scanning resumes when the operator depresses the momentary pushbutton scan start switch on the control panel.

The film flattening plates are controlled by permanent magnet stepper motors in a manner similar to the line index carriage. One motor drives the plates to the open position, creating the 1/8 inch clearance gap while the second motor, after a 1/2 second delay, translates the plates 0.1 inches. The entire operation of lifting and indexing is accomplished in 7 seconds. Both stepper motors are operated in an open loop system configuration, driven by the stepper driver and logic circuitry that is pulsed by a gated relaxation oscillator. The movement of the plates is positively controlled and synchronized with the movement of the line index carriage by means of limit switches on the plates. Both the line scan and line index motions are

interrupted for the 7 second period while the flattening plates are being indexed to a new position on the photographic frame.

The sprocket brakes that prevent film motion during the scan cycle are energized as soon as the scanning mode is selected. The two brakes, one coupled to the entrance sprocket, and the other coupled to the exit sprocket, are activated simultaneously from the +28VDC power supply.

A three stage transistorized source driver is employed to energize the GaAs light emitting diode. The first stage of the driver is a 10kHz Colpitts oscillator. The oscillator signal is applied to a second stage amplifier which in turn drives the third stage power amplifier. The light output of the GaAs diode, which is in the collector stage of the power amplifier and is continuously modulated at the 10kHz rate, illuminates the source optical system. The transistor collector current driving the light source is a constant direct current plus an alternating current of peak value equal to the direct current component. Thus, the light output from the device is modulated and proportional to the current through the diode. This modulation technique provides a carrier frequency for which the detector amplifier circuitry can be optimally designed. Additionally, operation about a high carrier frequency avoids the low frequency noise which is inherent in the photodetector.

Most of the experimental work to date has been done with the Philco GAE-406 light emitting diode. This device is specified to provide a CW output of 30 milliwatts at room temperature. Section 4.6 contains tables of

selected source and detector characteristics. A Texas Instruments Inc. diode, type PEX1206, also was obtained for evaluation. The PEX1206, which is produced in limited experimental quantities, provides 60 milliwatt output power at room temperature and represents the very latest development in pulled grown crystal GaAs technology.

Recent experimental work at Texas Instruments Inc. has led to improved conversion efficiency in GaAs light emitting diodes. These newest devices are solution grown junction diodes of mesa type construction as compared with the earlier types, like the PEX1206, which are pulled grown crystal devices. Although work is still in the laboratory stage, sample devices will soon be available for system evaluation. The increase in efficiency is over 100% at room temperature, resulting in efficiencies of about 10% for the newer solution grown devices compared to the typical 4% efficiency for the pulled crystal types.

The detector circuitry employs a silicon phototransistor, type 2N2452, as the sensor transducer. The phototransistor peak spectral response matches the wavelength of the radiation emitted by the GaAs diode, namely, 900 nanometers (nm). The sensor output current creates a voltage across a high impedance parallel L-C circuit tuned to a center frequency of 10 kHz. This voltage is then applied to a field effect transistor which acts to impedance isolate the output signal. The output of the detector circuitry is, therefore, a 10 kHz carrier signal, amplitude modulated by the film density variations.

2.4.3 Scanner Densitometry Study

A densitometry study of FAIRWEB processed SO-243 film was conducted to determine the effect of monochromatic scanning of photographic imagery. The GaAs scanner light source used in the PFS scanner emits at 900 nanometers with a narrow spectral bandwidth of 45nm.

Samples of SO-243 film were exposed and processed. The exposure was 1/100 sec. with a neutral density filter of 1.8 in an E.G. & G. Sensitometer. The samples were processed with Fairchild FAIRWEB monobath processing solution for 10 minutes. The film samples were then monochromatically scanned in a Cary spectrophotometer for discrete wavelengths in a wavelength range of 400 to 1200 nm.

The resultant specular densities are plotted in Figure 8 as a function of exposure for scanning wavelengths of 800, 100 and 1200 nm. Visual diffuse density is plotted on the same graph. It can be seen that all of the curves follow the pattern of conventional D Log E curves and it can be concluded that the appearance of photographic imagery will not be altered when scanning is performed with a GaAs light source at the 900 nm wavelength.

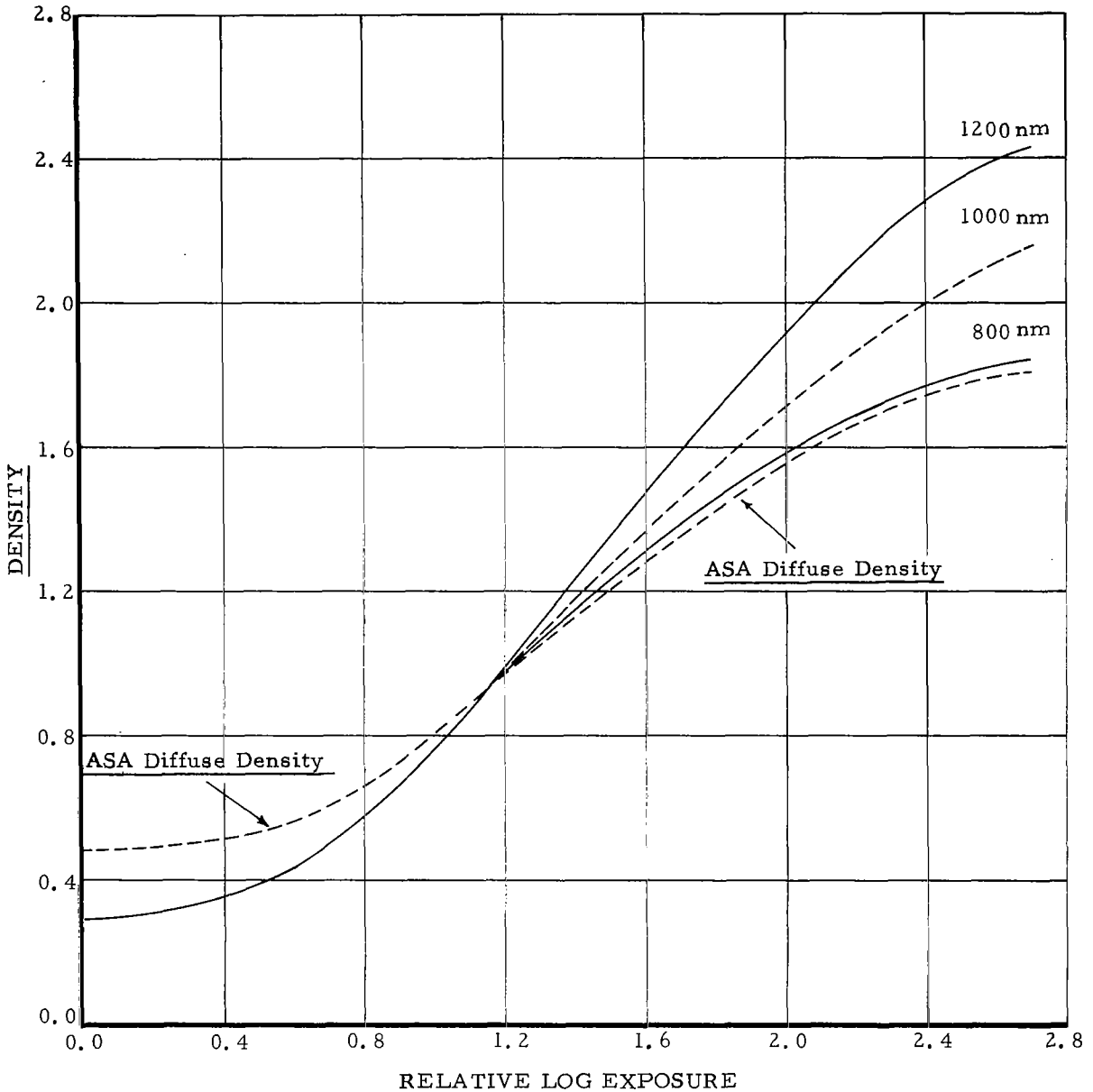

FIGURE 8. SPECTRAL DENSITY CURVES FOR SO-243 FILM

SECTION 3

PFS EVALUATION TESTS

Evaluation tests of the PFS hardware have been performed to determine component performance, subassembly operation and overall system operation and control. As is common in the development of any complex electro-mechanical equipment, various problems became apparent during test and evaluation, which were impossible to anticipate during the original PFS design phase. Design modifications and improvements suggested as a result of the test phase of the program are described and many of the changes already have been incorporated into the PFS unit.

3.1 PFS CAMERA TESTS

Component tests and operational tests of the PFS camera subassembly are described in the following subsections.

3.1.1 PFS Lens Tests

A lens with a minimum visual resolution of approximately 150 line pairs/mm was specified to satisfy the PFS resolution requirements. The lens obtained is a 6 inch f/2.8 Schneider Xenotar. Tests were performed to determine the lens-film resolution on SO-243 film with tray processing by D-19 developer to a gamma of 2.6. The test facility utilized a 177 inch parabolic collimator and a high contrast (1000:1), sixth root of two, target. Test results indicated the suitability of the lens for experimentation with the PFS breadboard unit.

The results of a through-focus test in flange focal distance (F.F.D.) increments of 0.001 inch are presented in Table 2. The increments were measured with a dial indicator accurate to ±0.001 inch; however, the value of the flange focal distance is accurate only to ±0.005 inches. The values for tangential resolution (T) and radial resolution (R) in line pairs/mm are indicated in the table.

Additional testing was done for on-axis and half-field angle conditions of 3° and 6°. For these tests the lens was rotated 90° and 180°, the target was photographed and the film processed as described earlier. Table 3 tabulates the resulting resolution values for 0°, 90° and 180° rotations of the lens.

3.1.2 PFS Camera Operation

Initial tests of the camera were performed without film and the unit functioned properly in all required modes. However, when the camera was loaded with film, it was found that the film path was too slack and that the film tended to wander and mistrack. The slack film path was caused by the supply spool, which had a tendency to unwind excess film during operation. A friction device was added to the supply spool to eliminate this problem. The poor tracking, caused by misalignment between the spools and the sprocket was corrected by shimming these components into proper alignment. Film tracking can be improved further with the use of either tapered or

TABLE 2. TANGENTIAL AND RADIAL RESOLUTION (LINE PAIR/MM) VERSUS F. F. D. FOR VARIOUS OFF-AXIS ANGLES

F. F. D. (in.)	0° T/R	3° T/R	6° T/R	9° T/R	12° T/R	15° T/R	18° T/R
5.472	59/ 66	74/ 66	91/ 82	81/103	64/ 82	47/ 79	42/ 79
5.473	74/ 74	74/ 83	91/ 82	81/103	58/ 92	42/ 79	42/ 79
5.474	93/ 93	93/ 93	91/ 82	81/103	58/ 82	37/ 79	37/ 88
5.475	104/117	104/117	91/ 82	72/103	58/ 73	37/ 79	33/ 79
5.476	117/104	104/104	102/ 92	81/103	51/ 73	33/ 70	33/ 79
5.477	104/103	104/117	102/ 92	91/103	40/ 65	24/ 70	24/ 70

TABLE 3. TANGENTIAL AND RADIAL RESOLUTION (LINE PAIR/MM) VERSUS F. F. D. FOR VARIOUS LENS ROTATION ANGLES

F. F. D. (in.)	0° Rotation			90° Rotation			180° Rotation		
	0° T/R	3° T/R	6° T/R	0° T/R	3° T/R	6° T/R	0° T/R	3° T/R	6° T/R
5.475	104/117	104/117	91/ 82	104/104	117/104	91/ 82	104/104	104/104	91/ 82
5.476	117/104	104/104	102/ 92	104/104	117/104	81/ 82	117/104	104/104	81/ 92
5.477	104/131	104/117	102/ 92	104/117	104/104	81/ 82	104/117	104/116	91/ 92
5.478	117/131	104/117	91/103	117/117	104/104	72/ 73	117/117	104/104	81/ 82
5.479	104/104	93/104	91/103	104/104	93/ 93	72/ 73	104/104	93/ 93	81/ 82
5.480	93/104	93/ 93	91/ 92	93/ 93	83/ 83	64/ 65	93/ 93	93/ 83	72/ 73

flanged rollers in the camera subassembly.

In the rewind cycle, the same problem of a slack film path became apparent. Since in rewind the roles of the two spools are reversed, (takeup becoming supply), friction was added to the takeup spool. A remaining problem in the rewind mode was that the film would throw a loop off the metering sprocket when it started to rewind. It was determined that this was due to the platen not unclamping the film fast enough before the metering sprocket had started to turn. The solution for use in the lab, was to put the unit into forward index mode to raise the platen before going into the rewind mode. Incorporation of a small time delay into the metering rate clutch so as to make its pull-in time slightly longer than that required for the platen lift solenoid would provide more system flexibility by allowing film rewind directly from any other mode without first going into the forward index mode.

Another problem concerned the coasting of the camera film transport motor when switching out of the picture taking mode or forward index mode. The metering rate clutch, which in the unenergized position engages the rewind mechanism, has a very short drop-out response time. Thus, when leaving the picture taking or forward index mode, the metering rate clutch deenergized rapidly while the transport motor coasted to a stop, and caused the film to begin to reverse. A delay-on-drop-out time delay relay, with a two second delay incorporated, was used in series with the metering rate clutch to delay its deenergizing and eliminate the problem.

Outdoor photography, taken at various cycling rates, shutter speeds and diaphragm openings, has proven satisfactory. However, further film flattening would be required to improve the lens-film resolution. The camera platen has been designed to utilize vacuum flattening and the camera controls are designed to provide +28VDC driving voltage to a vacuum solenoid. Addition of a vacuum solenoid, and a hose to the platen from an external vacuum pump, is all that is required to achieve this improvement.

3.2 PFS FAIRWEB PROCESSOR TESTS

The processor tests involved the processing of film exposed in the camera. Although the initial exposed pictures were developed, it was found that an excessive amount of FAIRWEB unrolled from the supply spool, and that a loop of spent web was thrown. By tensioning the supply spool, the former problem was solved, and by reversing the rotation of the spent web takeup, the loop was eliminated. Other photo and processing runs were made with fairly successful results.

The effect of long term stationary contact of the FAIRWEB material with the film was considered; however, this condition does not occur in any mode of operation of the PFS system, since the FAIRWEB material and the film are in contact only during processing. However, the performance of the mechanism which separates the FAIRWEB material from the film could be further improved. The modifications suggested include the use of a slower drive for the applicator arms, a time delay on the web drive for movement of the web material after disengagement, and a somewhat firmer drive on the spent web takeup.

Examples of laboratory processed and FAIRWEB processed PFS test exposures are presented in Figures 9 and 10 respectively. The two example images were obtained under varying conditions and exposure times and are included only to qualitatively illustrate the processing capability of FAIRWEB.

FEB. 19 - AFTERNOON
CLEAR, SUNNY
PROCESSING - D76
SHUTTER SPEED - 1/50 SEC F8

FIGURE 9. PFS CAMERA TEST EXPOSURES - LAB PROCESSING

FEB. 20 - AFTERNOON
OVERCAST CONDITIONS
PROCESSING - FAIRWEB
SHUTTER SPEED - 1/10 SEC F8

FIGURE 10. PFS CAMERA TEST EXPOSURE - FAIRWEB PROCESSING

3.3 PFS SCANNER TESTS

During the design phase of the program, laboratory testing was performed to establish the optical system geometry and the suitability of various source-detector combinations for the PFS scanner (see Section 4.6). The testing phase utilized the Philco GAE-406 light emitting diode as the source and the Fairchild 2N2452 phototransistor as the optical sensor. A more efficient Texas Instruments light emitting diode has been obtained and data has recently been made available concerning significantly more powerful diodes. Tests were performed with 1/4 and 1/2 mil aperture sizes and minification optics to determine the influence of detector subsystem noise on the required dynamic range. Since film densities in the range of 1.5 are to be scanned, a total light attenuation of 97% must be overcome by the source-detector electronics in order to provide a usable signal out of the detector circuitry. The minimum useful signal-to-noise ratio (S/N) is 2:1, but a ratio of 3:1 is more desirable for the output signal from the scanner, since further signal conditioning will be required in a spacecraft system.

The testing phase pointed out the need for proper shielding and grounding in the source-detector circuitry. Since the noise level of the scanner output signal directly affects the S/N level, considerable effort was expended to eliminate noise sources internally generated in the electronics or externally conducted to the output signal. The results of laboratory tests indicated that sufficient signal power could be obtained

with source limiting optics providing the necessary 1/4 mil spot size on the film and that a S/N ratio of 3:1 could be achieved with additional amplification to increase the signal amplitude.

Since the film flattening plates have a useful aperture of only approximately 0.1 inches, they must be moved at the completion of every 400 1/4 mil scan lines (or 200 1/2 mil scan lines). The original approach was to independently time the scanning of the index carriage and to move the plates at the end of a fixed period of time. The timing was controlled by a time delay relay arranged for delay-on-drop-out operation. However, this approach proved inadequate because of the high noise sensitivity of the relay. The relay drops out before its proper timing period has elapsed. The solution is to mount limit switches on the flattening plates with the limit switches actuated by contact with the index carriage. This approach provides positive synchronization between the flattening plates and index carriage and also eliminates the need for the time delay relay.

SECTION 4

ADDITIONAL PFS CONSIDERATIONS

Considerations of PFS metric accuracy potential and image reconstitution were also designated as tasks for the program. Such considerations are presented in this section.

The use of a film camera system incorporating a FAIRWEB processor and a precision lead screw driven solid state scanner offers great potential for future scientific space mission applications. Film systems have significant advantages over other space reconnaissance sensor systems.* For such systems, the FAIRWEB monobath impregnated processing web is the only material currently available that can simply and successfully operate under the space environmental mission conditions after long term storage during interplanetary flight. The use of a mechanical film scanner in conjunction with advanced cartographic film camera techniques will result in a system to satisfy future space mapping requirements.

The advantages of film systems in comparison to electro-optical systems for scientific space reconnaissance missions are described in this section. In addition, information is presented concerning the potential geometric fidelity or metric accuracy of the PFS, techniques for image reconstitution, and techniques for providing the camera with an image motion compensation capability.

---

*Fairchild Space and Defense Systems, "Martian Orbital Photographic Study," Report S&T-C67-3, December 30, 1967.

4.1 FILM SYSTEM ADVANTAGES

Photosensor system assessment studies and comparative tradeoff analyses indicate that there are outstanding advantages associated with the use of film systems for scientific space reconnaissance during the mid-1970's. Certain of these advantages which can apply to the potential utilization of the PFS technology are briefly summarized here. Consideration is given to resolution and coverage capabilities, dual resolution capability in a single system, stereo and mapping capabilities and data readout flexibility.

Resolution - A planetary film system requires the least mass to provide high resolution sensing (including film, processor and shielding) compared to electro-optical systems employing vidicon or return beam vidicon photosensor devices. This relationship holds for interplanetary data communication rates of 10^4 to 10^5 bits/second and for Martian missions as long as 200 days in orbit.

Coverage - The number of photographs required to provide a desired terrain coverage should be minimized to simplify imagery handling on earth. The number of frames required is a function of both sensor format and ground resolution. Film systems require the least number of photographs because of the relatively large film format sizes compared to the formats available with electro-optical devices. Extended length formats e.g. (57 x 220 mm) can be readily used with film systems.

Dual Resolution System - Film systems can provide dual resolution sensing capability by imaging through a dual lens system onto separate portions of the film strip. This approach cannot be used for electro-optical devices, since multiple camera heads would be required.

Stereo and Mapping Capabilities - The larger format size and higher resolution of film systems results in more useful stereo data than for vidicon sensors. In addition, the film system can provide greater geometric fidelity, particularly if a precision mechanical scanning device is utilized.

Data Readout Flexibility - The film scanning system can be implemented with coarse and fine scan capability but it is doubtful if such a feature could be incorporated for systems using tape recorder storage. Storage on film also permits repeated imagery readout or delayed readout during the mission without loss of information.

4.2 GEOMETRIC FIDELITY

The geometric fidelity potential for a mechanical lead screw readout device is discussed in this section although a complete cartographic system error analysis must be performed to determine overall geometric fidelity of a specified space mapping system. Based upon initial ground resolution and geometric fidelity objectives, such an analysis should include evaluation of all optical, electrical and mechanical system degradation elements. In particular, analytical consideration must be given to spacecraft velocity, altitude and attitude sensing errors, environmental control and power supply variations, optical system distortions, film dimensional stability, platen and reseau design, IMC mechanization, film processing variations, film readout fidelity and ground reconstitution accuracies.

A complete system analysis is not possible in the absence of specific information on mission parameters, vehicle characteristics and the sensor design configuration. However, based upon current FSDS design considerations, the mechanical accuracy aspects of the readout scanner of a potential space film camera system can be generally evaluated. In order not to degrade the quality of imagery, the scan readout function must be accomplished with a high degree of precision. This requires smooth and repeatable line scanning, with line indexing sufficiently accurate to prevent line to line overlapping or voiding. The major factors determining overall scanner system mechanical dimensional fidelity are:

1) scanner dimensional stability errors

2) line scan velocity accuracy and repeatability errors

3) orthogonality errors

4) line index errors

5) dynamic loading errors

Suitable dimensional stability of scanner component parts is easily achieved by means of conventional metallurgical treatment. Critical components, such as the film flattening plates, can be stress relieved, and the guide rails hardened to eliminate the introduction of possible errors due to material dimensional change caused by residual stresses that result from fabrication processes. Temperature caused errors could be made negligible by enclosing the scanner in a controlled environment. Such an environment would also be necessary to assure the dimensional stability of the film.

Line scan velocity accuracy and repeatability includes two sources of error: lead screw pitch error and velocity error. A pitch error of 0.0001 inch per inch is specified by lead screw manufacturers. This error is fixed over the length of the screw and, by preloading, can be corrected to 0.00002 of an inch over the entire length of the lead screw. A negator spring is used in the experimental scanner subassembly to provide this preloading. Velocity errors due to gearing and motor speed variation can be reduced to very small, almost negligible values by means of puck drives.

Orthogonality accuracy, or the degree to which the x and y axes of the format remain orthogonal during readout, is dependent on two factors: parallelism of guide rails and angular alignment of the scan and index carriages. Parallel guide rails, utilizing rectangular or square flats, together with preloaded bearings, can ordinarily provide flatness and parallelism to 0.00005 of an inch. Precise angular alignment of the scan and index carriages can be achieved, without much difficulty, to an accuracy to 2 seconds of arc. This provides an error of 0.00001 inches per inch or 0.00003 inches for the 3 inch format length.

Line indexing errors include the index lead screw error and the stepping motor or angular drive error. As in the case of the scan lead screw, a pitch error of 0.0001 inch per inch is attainable with the index lead screw. Preloading can be provided with a simple extension spring. The stepping motor error, including gear variations in the angular drive, can be in the order of 0.00001 inch per inch.

The errors incurred due to the structural response cause by dynamic loads are directly associated with the scanner configuration and those constituents which introduce forcing functions into the system. The vibrations and shock impulses imparted to the scanner by motor drives, gearing and mass accelerations and decelerations must be reduced via damping and energy absorption techniques. Further, the stiffness of the structural members must be engineered with specific attention

to section modulii and end fixities. This treatment will provide the necessary protection against deflection and rotation excursions, which could otherwise create loss of control over critical dimensions (e.g. the illuminator to film relationship).

The total geometric distortion, the summation of all the mechanical sources of error discussed here, is on the order of 0.02% distortion over the entire format.

4.3 IMAGE RECONSTITUTION TECHNIQUES

Actual reconstitution of scanned imagery was not included as part of the contractual program reported on in this report. However, since ultimate verification of total system performance can only be measured by reconstructing the photographs readout from the scanner subassembly, various methods of reconstitution have been considered.

Preliminary considerations of reconstitution implementation techniques involved four possible schemes:

1) real time reconstruction on film using an integral scan/reconstitute carriage
2) real time reconstruction using a separate, remote carriage
3) video input to a storage oscilloscope
4) video input to a laboratory oscilloscope with continual photography of the scope trace.

To retain the metric accuracy inherent in the scanner subassembly performance, it appears that the use of either of the oscilloscope approaches, as considered in 3) and 4), would be self defeating. Thus, real time reconstruction with a precision carriage, is indicated, since the geometric fidelity could best be maintained by reconstituting the image in the same manner as readout is accomplished, i.e., a precise lead screw driven carriage.

Consideration of a choice between an integral carriage mounted

above the present readout carriage and a separate, adjacent carriage driven synchronously with the readout carriage, focuses onto the problems of space availability in the breadboard system and stability of the present scanner drives. To place a reconstitution carriage above the readout carriage would require extensive rework of the camera-scanner housing since the breadboard system virtually completely fills the available space. Placing the carriages "piggy-back" could possibly place an excessive load on the present line scan and line index motors and effect their regulation and stability.

Fabrication of a separate adjacent carriage would require the generation of synchronization signals for line start, line stop, frame start and frame stop. Additional circuitry and sensors would be required on the readout scanner to provide these needed signals. A light emitting source would expose the film through a minification optical system by providing a spot size for imaging comparable to the scanner readout spot size. A variety of interchangeable sources can be considered for use with the laboratory reconstitution equipment, i.e., solid state or conventional, CW or pulsed, sub-lasing or lasing, visible or infrared. Analyses and tradeoffs must be performed to properly select the light source and to specify the matching films for a particular mission application.

The use of a separate adjacent carriage precisely synchronized

with the readout scanner motion will provide the simplest, most flexible and most economical approach to satisfy current needs for imagery reconstruction in conjunction with operation and evaluation of the experimental planetary film reconnaissance system.

4.4 IMAGE MOTION COMPENSATION TECHNIQUES

Image motion compensation (IMC) would be required in an operational system in order to obtain the best possible resolution and metric accuracy. Basically IMC can be obtained in two ways for a system of this type. One method is to hold the film stationary and move the lens to compensate for the image motion; the second method is to hold the lens still and move the film and platen. The former method has been used on Fairchild rotary prism panoramic cameras such as the KA56, KA77, KA78. These cameras, however, are of a reconnaissance type, and do not require that additional data, such as accurate fiducials and reseau patterns, be exposed on the film during IMC and picture exposure.

For mapping cameras, certain advantages are gained by moving the film and platen with the lens held stationary. Since the platen and film relationship remains fixed, a reseau pattern can be projected on the film at the instant of exposure. Also, a much smaller mass (film and platen) need be accelerated and decelerated. This moving platen method is currently being used on Fairchild mapping cameras such as the F639 and the KC6A.

Two methods can be used to drive the moving film and platen combination. In either case, a hysteresis synchronous motor would probably drive the reduction unit to the IMC cam. The reduction unit may be either a gear reduction drive or a friction drive. Gearing, even with the use of

the most accurately cut gears, introduces a certain amount of chatter which tends to degrade resolution. A friction drive will eliminate any chatter in the IMC system. The driving is done by hardened and polished steel discs and idler rollers loaded against each other with enough force to transmit the required torque. This method of driving has been used in equipments developed by Fairchild with excellent results.

4.5 FAIRWEB PROCESSING

The porous plastic used for FAIRWEB has been specifically developed for film processing. FAIRWEB is a saturated microporous, unplasticized polyvinyl chloride which will not be affected by, or affect, the photographic processing solutions. It is non-fibrous and flexible with approximately 80% of its 0.008 inch thickness being void volume.

FAIRWEB is essentially non-compressible and, therefore, will not drip. Its tensile strength of 2 lb./inch of width is sufficient for this application. Where greater strength is required a thin plastic support, similar to a film base support for gelatin, or a plastic laminate for paper, may be interleaved within the roll.

FAIRWEB is microporous and will not adversely affect processing uniformity. It exhibits superb sheet integrity and can be easily separated from the processed emulsion. It will not adhere to the emulsion unless allowed to dry completely while in contact.

Monobath processing, as the name implies, uses a single solution which simultaneously develops and fixes the film. Processing is carried to completion so that overdevelopment is impossible even if the minimum required processing time is exceeded. The saturated web is brought into contact with the silver halide emulsion for processing. The processing liquid diffuses into the silver halide emulsion from the web. The solution

content of the web is approximately 165 gm/m^2 and virtually all the liquid in the web is available for processing. The web may be stripped from the film immediately upon completion of processing or may be retained in contact until it can be conveniently removed. In case of misalignment between the film and the saturated web, the web corrects itself.

The monobath chemicals are dissolved in water which can evaporate in a reduced pressure environment. In order to protect the web from the environment, it is encapsulated in a flexible, heat sealable, aluminized mylar plastic sandwich to prevent evaporation. The web remains sealed until needed for processing, at which time the envelope is opened and the web is brought into contact with the exposed film. The encapsulated FAIRWEB material can be frozen for long term storage and can withstand temperatures up to 190°F. FAIRWEB storage capability of 24 months has been demonstrated with no degradation of performance.

Present state-of-the-art experience on rapid processing (five minutes or less) with FAIRWEB indicates sensitometric results sufficiently close to those of film manufacturers. Figure 11 presents a sensitometric curve comparing FAIRWEB processing with D-76 processing for SO-243 film processed to a gamma of 1. The illustrated processing curves are fairly well matched. The sensitometry of FAIRWEB processed film can be changed by modifying the monobath chemistry.

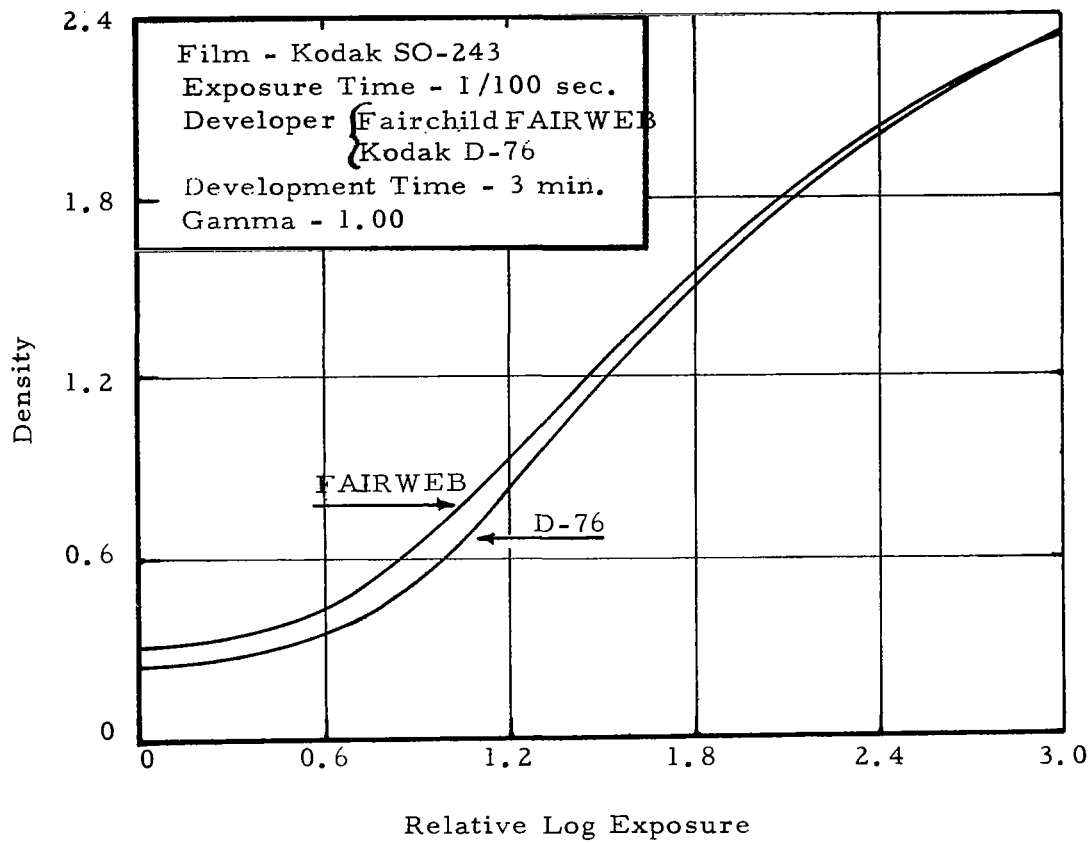

FIGURE 11. COMPARISON OF FAIRCHILD FAIRWEB PROCESSING WITH KODAK D-76 PROCESSING FOR SO-243 HIGH DEFINITION FILM

4.6 SOURCE/DETECTOR SURVEY

A survey of available light emitting diode sources and optical detectors was conducted during the course of the program. Since the usefulness of the scanner output signal depends so heavily on these devices, a continual search must be made of component manufacturers to locate and evaluate new devices that could improve system performance. Tables 4 and 5 respectively list the characteristics of the leading sources and detectors currently available. The tables were prepared after careful consideration of devices manufactured by twenty firms. In addition to the light source devices listed in Table 4, the anticipated availability of high power solution grown junction diode sources should be considered for use in the PFS.

TABLE 4. GaAs LIGHT SOURCE

Manufacturer and Type	CW Output Power (mw)	Wavelength (Microns)	D. C. Current at 25°C	Beam Divergence Angle	Efficiency (%)
Philco GAE-406	30	0.92	2 amps	30°	1
T.I. PEX 1203	40	0.93	300 ma	130°	10
T.I. PEX 1206	60	0.93	1 amp	130°	4

TABLE 5. OPTICAL DETECTORS

Manufacturer and Type	Peak Sensitivity Wavelengths (Microns)	Sensitivity (MAX) at 25°C	Dark Current (MAX) at 25°C (nA)	Response Time
Fairchild NPN Planar Phototransistor, 2N2452	0.85	200 $\mu A/mW/cm^2$	10	1.0 μsec.
HP Associates Silicon Planar PIN Photodiode, No. 4201	0.85	1.0 $\mu A/mW/cm^2$	2	1.0 nsec.
E. G. &G. Silicon Photodiode, No. SGD-100	0.92	0.5 $\mu A/\mu W$ (active area: .051 cm^2)	50	4.0 nsec.
Crystalonics N-Channel Fotofet, FF600	0.95	800 $\mu A/FC$	3	30 nsec.

SECTION 5

FINAL REPORT SUPPLEMENT

PFS MODIFICATION AND EVALUATION

A breadboard Planetary Film Reconaissance System, consisting basically of a camera, processor and scanner with an integral film transport mechanism, has been designed, fabricated, assembled, tested and evaluated. The completed system, when operated in a laboratory environment, demonstrates the use of advanced film processing and scanning techniques suitable for future planetary reconnaissance missions.

A program extension, authorized by NASA-Langley Research Center, covers performance of additional tasks related to the following specific areas of investigation and/or hardware modification:

Task 1. - Camera Transport Modification

Task 2. - FAIRWEB and Laboratory Imagery Processing.

Task 3. - Processor Design Improvements

Task 4. - Scanner Source and Detector Circuitry Improvement

Task 5. - Scanner Source and Detector Survey

Task 6. - Scanner Spot Size and Resolution Testing

Task 7. - Scanner Transport Modification

Task 8. - Scanner Frame Plate Synchronization

Task 9. - Scanner Metric Accuracy Capability

The initial PFS breadboard evaluation tests pinpointed certain areas for hardware modification. The implementation of these modifications has improved system operation and increased the total flexibility and overall usefulness of the PFS breadboard as a research tool. The additional tests and performance evaluations have permitted the specification of the Planetary Film System (PFS) performance capabilities, particularly in terms of scanner dynamic range, resolution and metric accuracy.

The additional tasks performed by Fairchild Space and Defense Systems during the program extension are described in the following subsections of this report supplement. Results and evaluations of PFS tests are presented and illustrated. The discussions of the program task efforts are presented in the order listed in the contract, although, in actuality the tasks involving hardware modifications were performed prior to the performance of the appropriate tests.

5.1 TASK 1-Camera Transport Modification

The camera transport mechanism has been modified to improve the accuracy of film positioning with respect to the format plate. In the camera subassembly, the platen presses against the format plate during exposure, thereby clamping the film in place. The format plate was accurately repositioned to improve film positioning. This improvement is evident in subsequent photography which shows the imaged frames precisely centered on the film. Sample imagery is shown in Figures 12, 13 and 14.

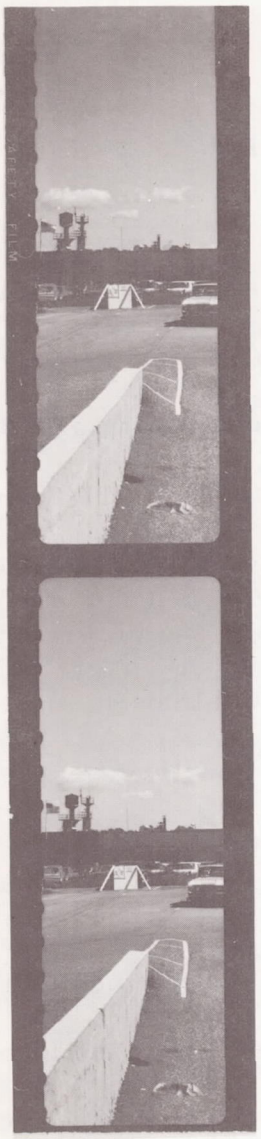

LAB
PROCESSED

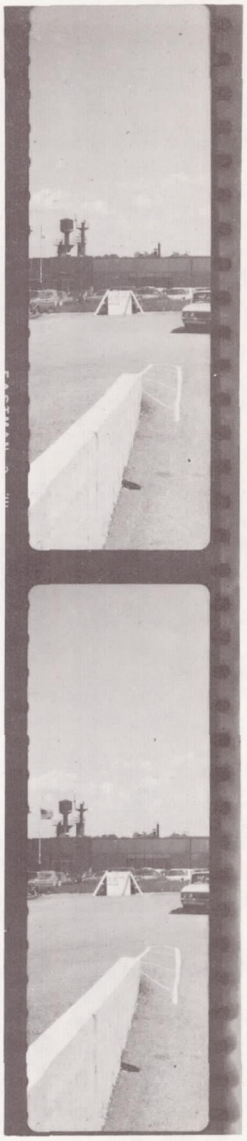

FAIRWEB
PROCESSED

FIGURE 12 PFS PHOTOGRAPHY

EXPOSURE: 1/50 sec; f/8

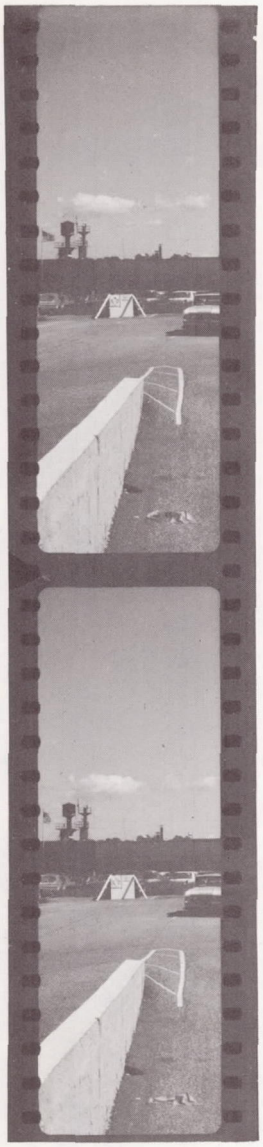

LAB
PROCESSED

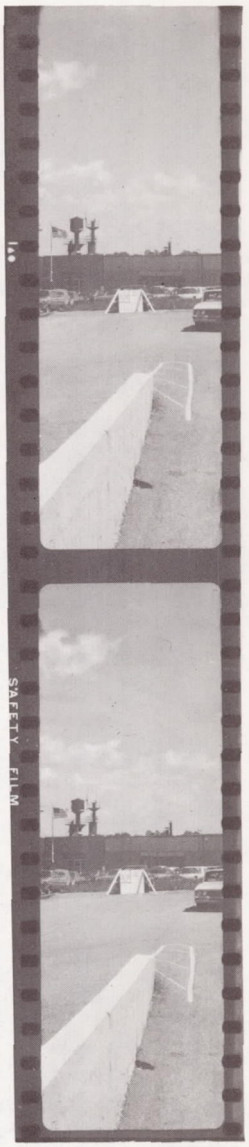

FAIRWEB
PROCESSED

FIGURE 13 PFS PHOTOGRAPHY

EXPOSURE: 1/50 sec; f/11

LAB
PROCESSED

FAIRWEB
PROCESSED

FIGURE 14 PFS PHOTOGRAPHY

EXPOSURE: 1/50 sec; f/16

5.2 TASK 2-FAIRWEB and Laboratory Imagery Processing

Additional PFS photographs processed by FAIRWEB saturated monobath web in the PFS breadboard have been compared with those processed by standard laboratory techniques. Several series of outdoor exposures were made on SO-243 type film at various diaphragm settings. An enlarged National Bureau of Standards Test Chart 25X, mounted on plywood and placed 150 feet from the PFS breadboard unit, was used as a resolution target. Each test included both FAIRWEB processing in the PFS breadboard system and processing in the Photo Science Laboratory. Exposure times ranged from 1/25 to 1/100 second; diaphragm settings were f/4 through f/16. For the initial tests, lab processed exposures were developed in D-76 developer to a gamma of 1. Subsequently, the lab processed film was developed in a Versamat Automatic Processor using MX641 developer to a gamma of 1.29

Examples of lab processed and FAIRWEB processed PFS test exposures are presented in Figures 12, 13 and 14. These samples were taken at 1/50 second exposure times with diaphragm settings of f/8, f/11, f/16 respectively. Although the appearance of the FAIRWEB processed frames differs somewhat from the lab processed frames no apparent degradation in resolution could be determined for the test exposures. A spongy texture was apparent in some of the FAIRWEB processed imagery. This is most probably due to the fact that the encapsulated

FAIRWEB used in these tests was not refrigerated, but had been stored for approximately 7 months in a normal laboratory environment. It is believed that such uncontrolled storage, with temperatures varying from about 65 to 85° F, may permit a certain amount of drying out of the monobath in the processing web. It must be emphasized, however, that this effect did not appear to cause any degradation in the resolution of the resulting FAIRWEB processed imagery.

5.3 TASK 3-Processor Design Improvements

Design changes have been incorporated into the processor assembly to improve the FAIRWEB takeup drive, the film-processing web pressure roller system, and the film-processing web separation controls.

The FAIRWEB takeup drive was modified by replacing the drive spring belt with a rubber "O" ring belt and by incorporating a 12 oz.-in. torque spring wound brake for the supply spool and a 32 oz.-in. torque spring wound slip clutch for the expended web takeup spool. The resulting improvements provide better tracking of the web during processing. The expended web and encapsulation materials now wind more evenly and individual frames show uniform processing over the entire format area.

Since the quality of processing is a function of the film-processing web contact, an effort was made to determine and then establish the range of optimum contact pressure by adjusting the spring tension in the pressure

roller system. Experiments were conducted using different extension springs and suitable springs were selected to properly load the pressure rollers against the web applicator arms.

Modification of the film-processing web separation controls has involved the rewiring of the processor web drive clutch and web disengage clutch. Previously, the web drive was deenergized after a processing sequence and the web applicator arms would pivot down, thereby separating the FAIRWEB from the film. The processor drive continued to move processed film through the dryer until the last frame of processed film was dried. As a result of the modification, the FAIRWEB continues to be driven for a short period of time, while the applicator arms are being lowered and after they are lowered. Improved uniform separation has been achieved with no detectable FAIRWEB pull-off line on the film.

5.4 TASK 4-Scanner Source and Detector Circuitry Improvement

Improvement of the light source and photodetector circuitry has resulted in a better signal-to-noise ratio(S/N) for the readout signal. Since the S/N ratio affects the scanner dynamic range capability, efforts to maximize the S/N ratio have been aimed at directing maximum source energy onto the detector and, simultaneously, reducing the detector noise level. Significant improvement has been achieved in accomplishing both these goals. The final circuit provided a measured peak S/N voltage ratio of 167:1 for clear film (base plus fog density of 0.3) with a spot size diameter

of 0.25 mil at the film plane. A film density range of 1.5 on a photographic wedge, which corresponds to a contrast range of 32:1, was scanned; a S/N ratio of better than 5:1 was obtained for the 1.5 density step. The testing was done entirely with the T.I. PEX-1206 light emitting diode. (Earlier testing had utilized only the Philco GAE-406 source which has roughly one half the power output of the PEX - 1206.)

The original, three stage transistorized source driver electronics has been considerably modified to provide flexibility in testing and evaluation. The new test circuit is shown in Figure 15. The fixed 10 KHz Colpitts oscillator was replaced with an adjustable audio oscillator and an adjustable laboratory power amplifier was utilized in place of the original second stage amplifier. This configuration provided a capability for over 100% sinusoidal modulation of the light source driving current (all tests were performed at 100% modulation). The emitter current value of Q1 was first set to 0.5 amps D.C. by adjustment of R1. The signal voltage driving the base of Q1 was then increased by varying the voltage control provided on the H-P power amplifier until a 100% modulated signal voltage was observed on an oscillioscope at the emitter of Q1. Since only the A.C. component of the light source driving current produces a useful radiated signal, the optimum driving condition requires 100% modulation with as large a current value as the source diode power dissipation will permit. A 1.0 ampere peak to ground value for the emitter current was used consistently in all

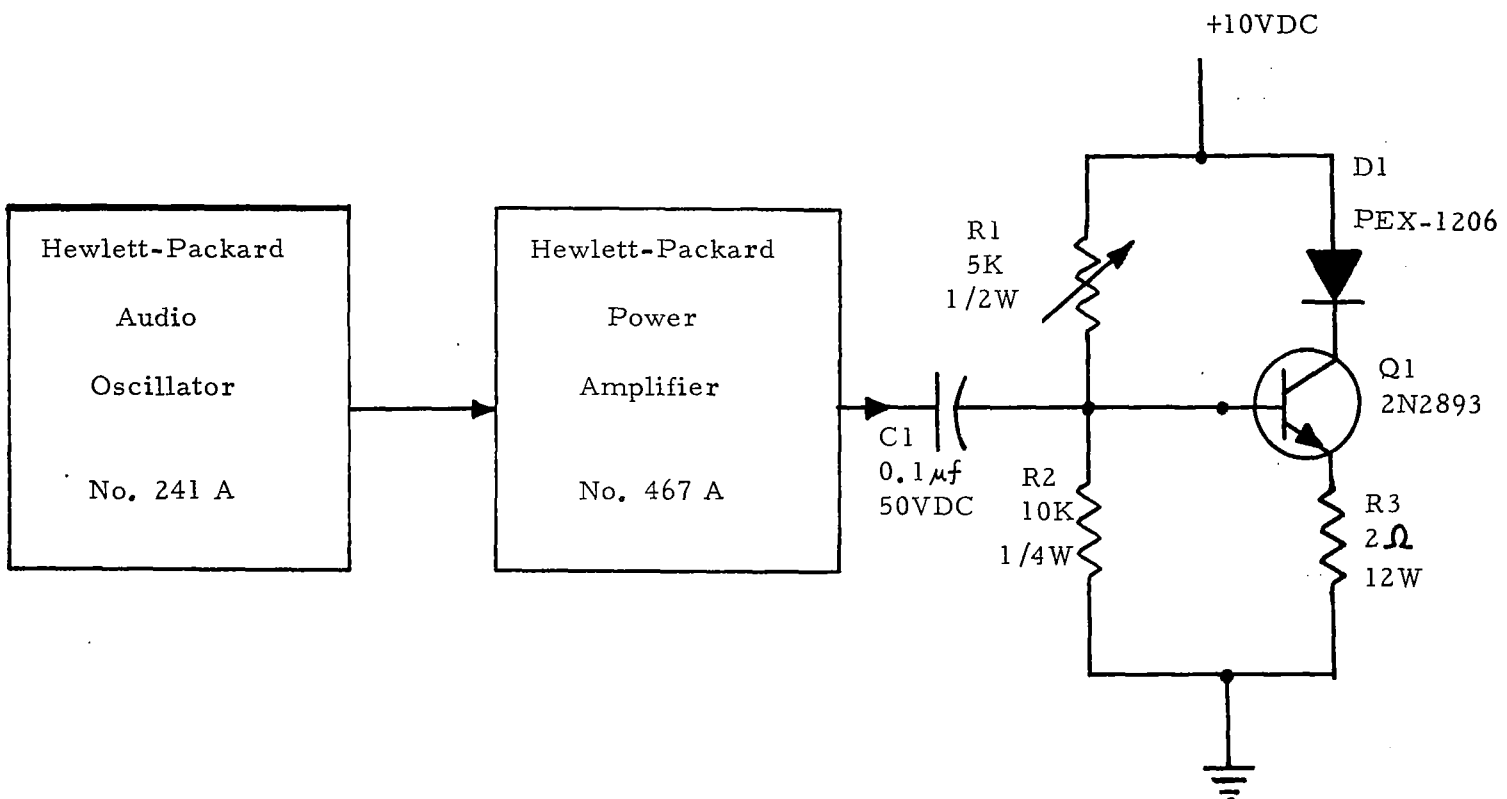

FIGURE 15. LIGHT SOURCE DRIVER CIRCUITRY

the testing, although this is somewhat lower than the maximum rated current.

The detector circuitry was completely redesigned to provide low noise, high gain amplification for the phototransistor. The final circuit, shown in Figure 16, provides a peak S/N voltage ratio of 167:1 when clear film is scanned with a 1/4 mil diameter spot. The circuitry employs a 2N2452 silicon phototransistor, a tuned L-C filter as the collector load and two stages of amplification. Q2 and Q3 form an audio amplifier which includes additional tuning by means of L2 and C2. The first stage, Q2, is a common-source amplifier with an unbypassed source resistor, R6, that supplies substantial degeneration for stability and low distortion. The second stage, Q3, is also a common-source amplifier, with separate outputs from its drain (high impedance) and source (low impedance) to accomodate various loads. With potentiometer R7 set for maximum gain, the maximum input signal to Q2 before output-peak clipping is 7 millivolts RMS. The corresponding maximum signal outputs are 2 volts RMS for output 1 and 0.45 volt RMS for output 2. The inductance and capacitance values for the two tuned circuits provide for tuning the peak output to 10KHz.

Typical detector output signals are shown in the oscilloscope photos of Figure 17 for several different values of film transmittance using a 1/4 mil diameter (6 micron) spot size. The resultant scanning grey shade dynamic range was tested by scanning a standard photographic step wedge.

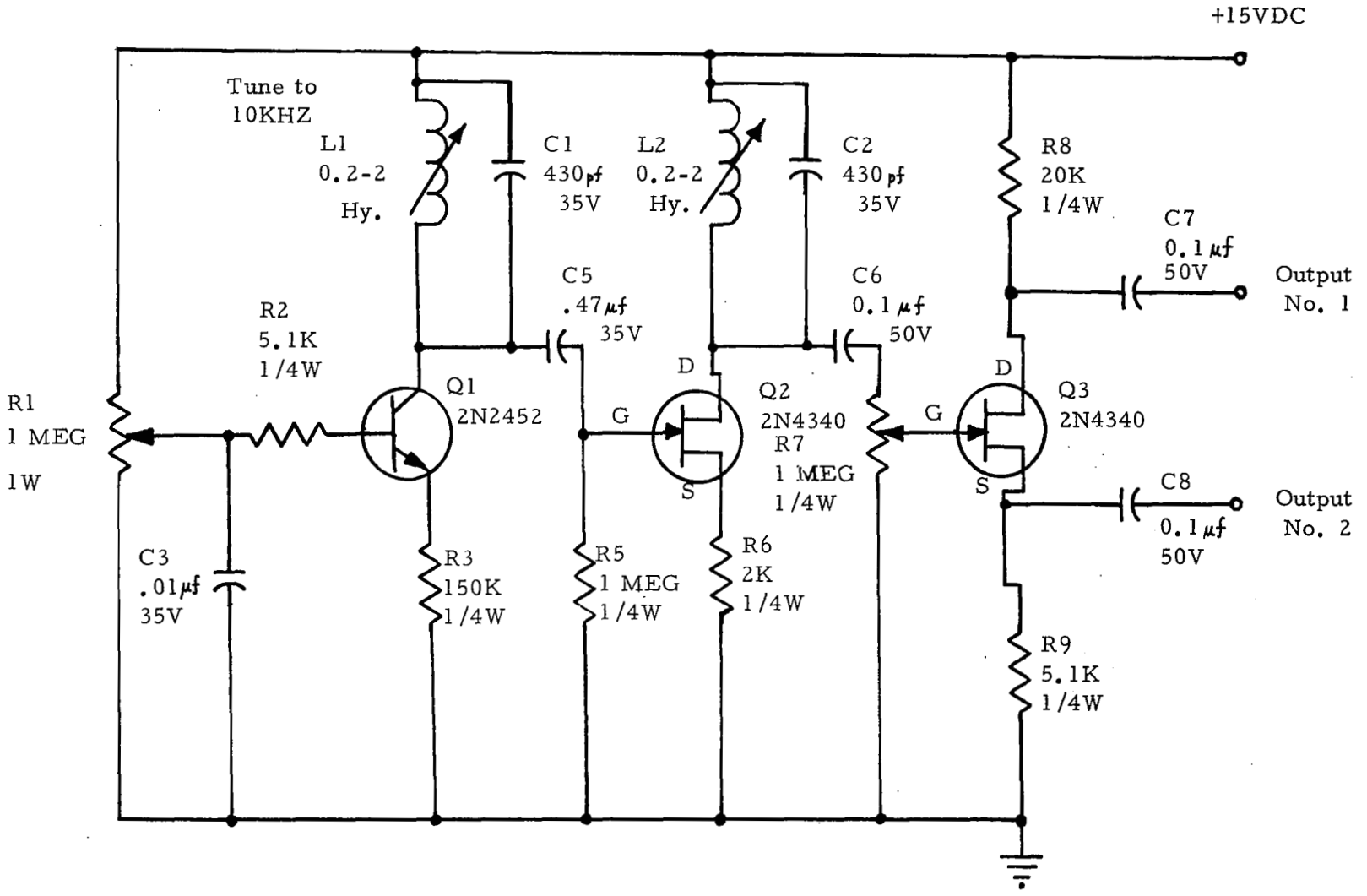

FIGURE 16. SCHEMATIC OF DETECTOR CIRCUITRY

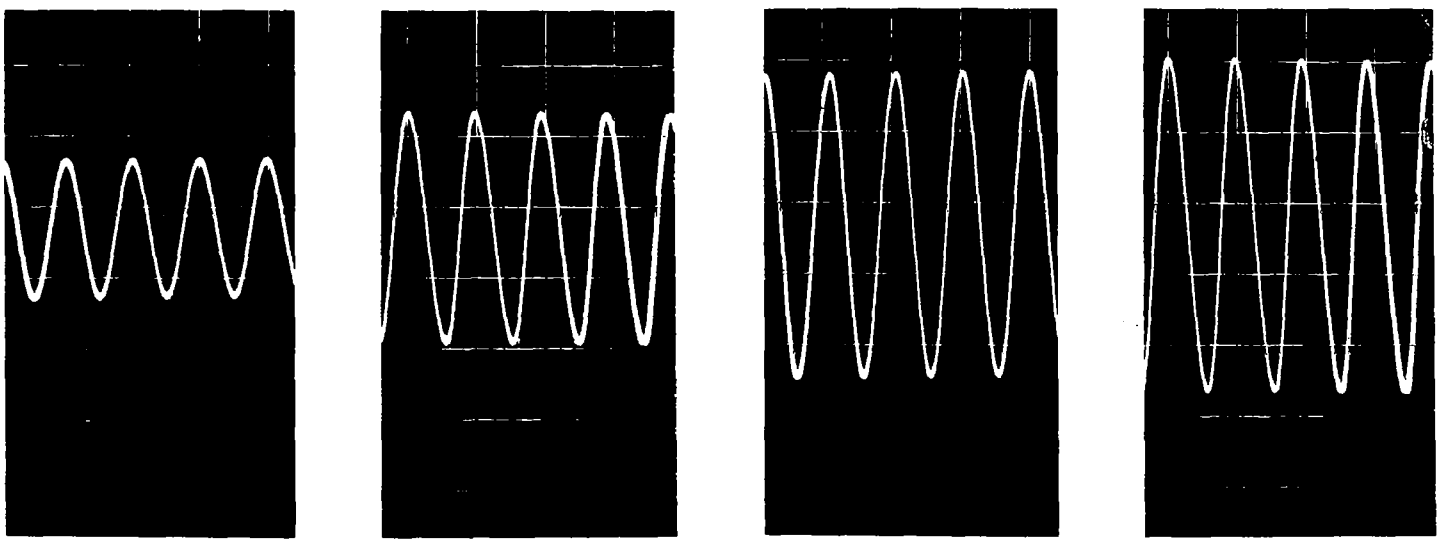

FILM
TRANSMITTANCE:

25.6% 35.4% 42.7% 46.7%

FIGURE 17 TYPICAL DETECTOR OUTPUT SIGNAL WAVEFORMS VS. FILM TRANSMITTANCE (SCANNING SPOT SIZE: 0.25 MIL DIAMETER)

The detector signal amplitude is plotted in Figure 18 as a function of step wedge transmittance where the relationship between density and transmittance is given by: $\text{Density} = \log_{10} \frac{1}{\text{Transmittance}}$.

A total density range of 1.5, corresponding to a dynamic range of 32:1 (10 standard grey shades), is indicated by these results.

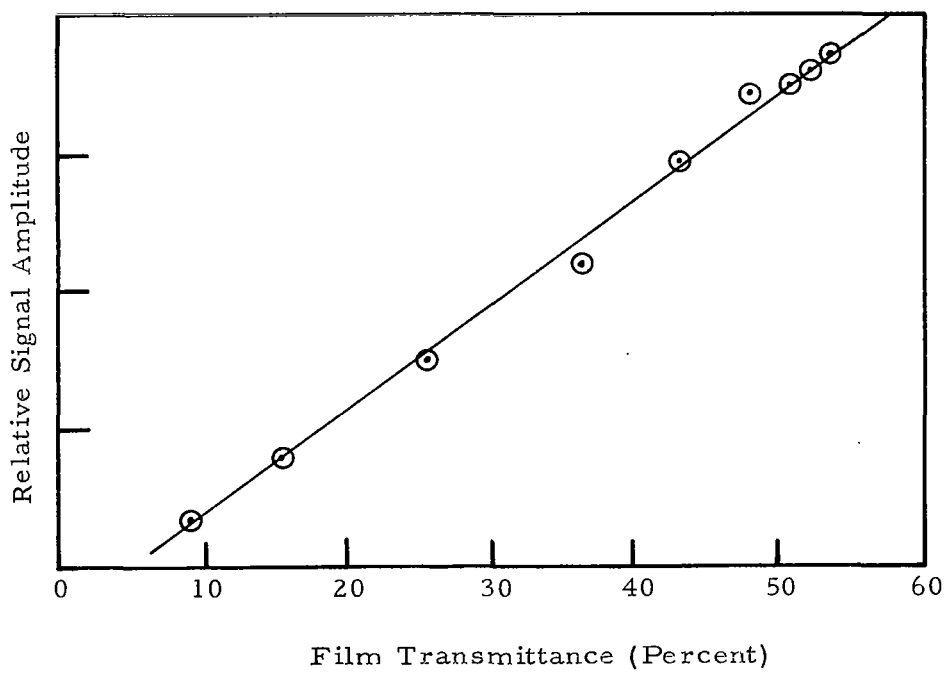

FIGURE 18. DETECTOR SIGNAL AMPLITUDE VS. FILM TRANSMITTANCE

5.5 TASK 5- Scanner Source and Detector Survey

An extensive survey of suitable source and detector components was conducted during the initial phase of the Planetary Film Reconnaissance System program. This survey has been continued during the program extension period.

Tests performed during the program extension have exclusively involved use of the Texas Instrument PEX-1206 high power GaAs light emitting diode. For room temperature operation, this device is the most powerful commercially available near infrared solid state source. The PEX-1206 provides an output of 60 milliwatts at a wavelength of 0.93 microns with a total emission angle for half intensity of 130 degrees. The diode has a 72 mil diameter hemispherical dome of n-type GaAs completely enveloping a 20 mil diameter p-type region centered at the base of the hemisphere. The interface between the n-type material and p-type material is the light emitting junction, which yields high total power output over a wide emission angle with an efficiency of about 4%.

The recent survey reveals that new experimental flat junction devices can provide significantly higher on-axis radiance. Texas Instruments personnel report that a circular flat junction MESA type solution grown GaAs device, with a junction diameter of 10 mils, can provide improvement in detectable power output of at least an

order of magnitude for a 1/4 mil diameter scanning spot.

The important parameters for an optimum solid state photodetector include: peak sensitivity at light source emission wavelength, high quantum efficiency, low noise, wide dynamic range, and good frequency response. The Fairchild NPN planar 2N2452 phototransistor has been used in the PFS scanner. However, improvement in system performance could be obtained with better spectral matching of the peak emission wavelength of the source to the peak sensitivity wavelength of the detector. The present peak wavelengths are 0.93 microns for the PEX-1206 source and 0.85 microns for the 2N2452 detector. Newer developmental avalanche silicon photodiodes offer promise of precise spectral matching to the peak emission wavelength of the source. This may be achieved by suitable doping of impurity elements into the silicon.

The importance of solid state linear arrays for significantly higher data readout capability has been recognized since the inception of the program. Continuing discussions with both Fairchild Semiconductor and Texas Instruments reveal that both high power GaAs source arrays and integrated silicon phototransistor detector arrays can be reliably manufactured. Although these arrays are in the research and development stage, both firms are proceeding with intensive work in this area.

The source array appears as the more critical item at this time. A typical source array would consist of 5 to 10 elements of solution grown GaAs in a linear or staggered monolithic array. Each source element would have either a 4 mil diameter circular or square emitter spaced on 7 mil centers. Phototransistor detector arrays of 10 to 100 elements are available at element packing densities of 400/inch and 1250/inch.

5.6 TASK 6- Scanning Spot Size and Resolution Testing

The theoretical result of decreasing the scanning spot size is to increase the resolution capability of the readout subsystem, assuming other factors are satisfied, e. g., sufficient illumination. Laboratory tests involved the scanning of a portion of a high contrast USAF resolution test chart with selected scanning apertures. The readout signal was photographed on a scope and measured to determine the square wave response of the scanner for specific scanning spot diameters. The test target was a high contrast, USAF-1951 resolution test chart on 4-1/2 mil thick film. Scanning was accomplished for group +6 target elements 2 through 6, corresponding to resolving power values ranging from 71.84 lp/mm to 114.03 lp/mm.

Initial tests were conducted with 0.5 and 0.25 mil diameter spot sizes at the film plane. (Ignoring the Kell factor, a 0.25 mil spot diameter is required to satisfy the specified scanner design goal of

80 lp/mm.) Upon completion of the detector circuitry improvement task (Task 4), additional tests were conducted with 0.4 and 0.2 mil diameter spot sizes.

A typical oscilloscope trace photograph for group +6 elements, scanned with the 0.2 mil spot size, is shown in Figure 19. Comparative calculated results are presented in Figure 20; averaged values of percent modulation are plotted as a function of spatial frequency for the test data obtained with 0.4, 0.25 and 0.2 mil diameter spot sizes. The 0.2 mil diameter test results indicate a response of 50% at 80 lp/mm and better than 25% at 100 lp/mm.

The theoretical limit on the size of the spot diameter is a function of the wavelength of the light imaged through the film and the F-number of the minifying optical lens, if the light source illumination is sufficient. Although higher source brightness can be achieved by operating the source at lower temperatures, the attendant increase in system complexity and weight is undesirable. The excellent results achieved with the present source and the anticipated further improvement in power output expected from the flat junction GaAs devices, leads to the firm belief that increased resolution is attainable with room temperature operation of light emitting diodes. Future tests with higher power sources should involve use of both high and low contrast resolution targets.

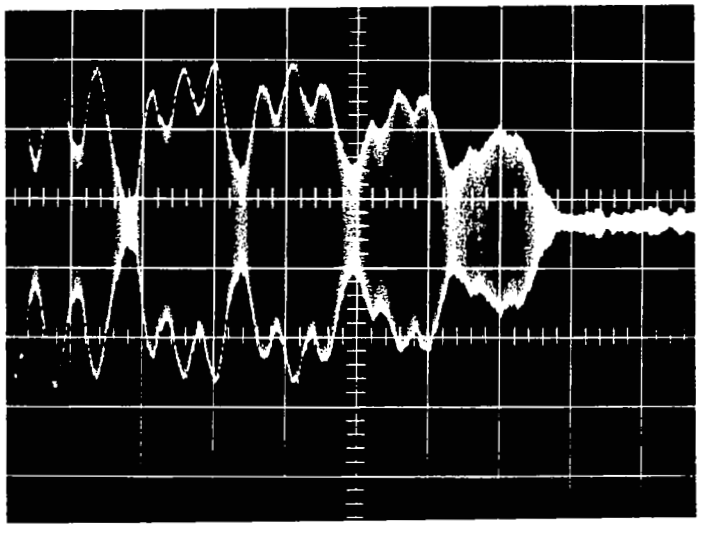

SCANNING
SPOT SIZE
0.4 MIL DIA.

ELEMENT No.:	2	3	4	5	6
lp/mm:	72	81	91	102	114

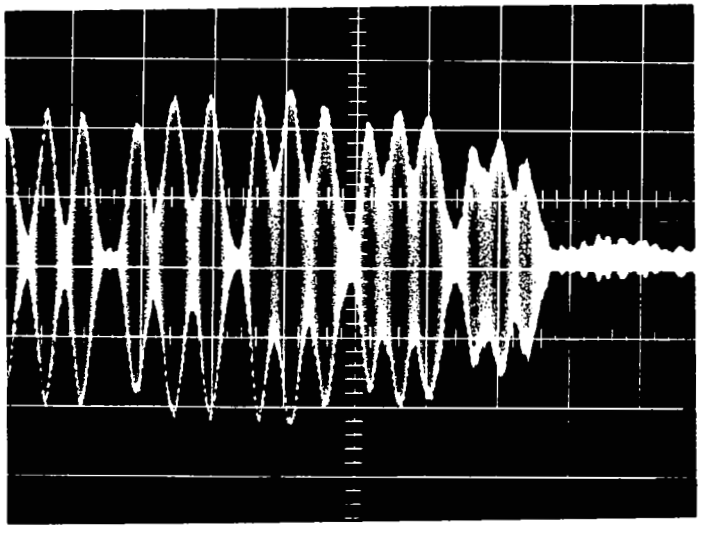

SCANNING
SPOT SIZE
0.2 MIL DIA.

FIGURE 19. SCANNER OUTPUT FOR GROUP +6 TARGET

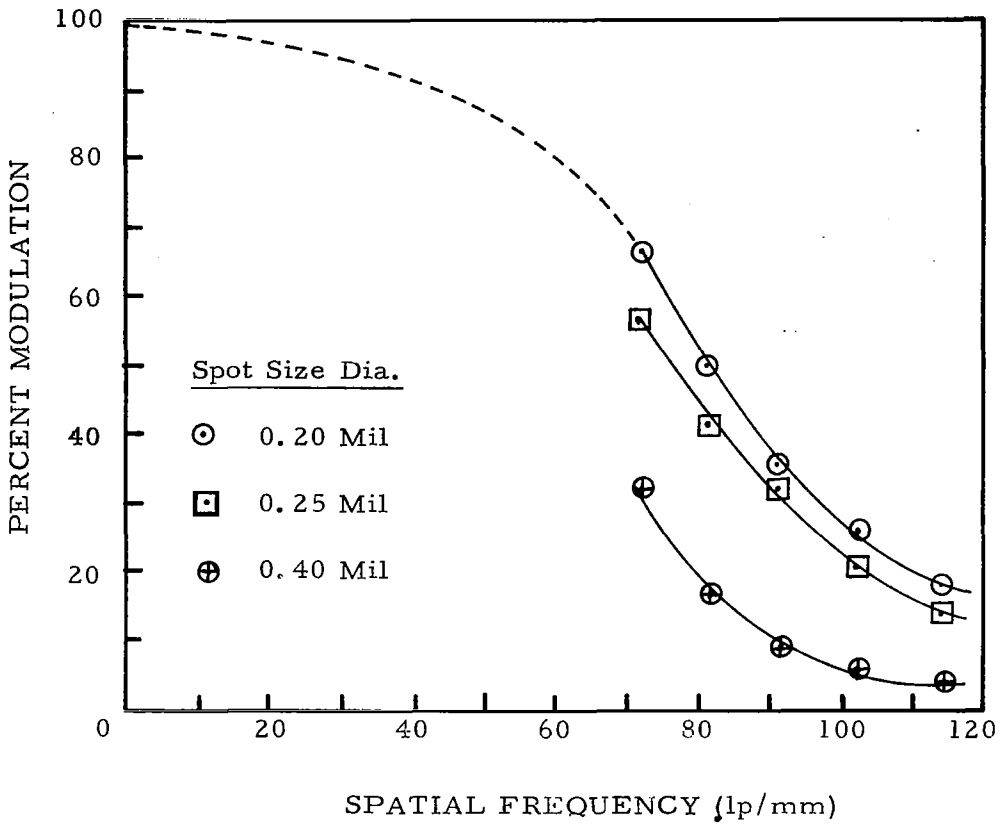

FIGURE 20. SCANNER SQUARE WAVE RESPONSE

5.7 TASK 7- Scanner Film Transport Modification

Modification of the scanner film transport has been accomplished in order to improve the positioning accuracy of the photographic frame with respect to the scanner assembly. In order to scan a particular frame, it is necessary to energize the film transport and move the frame into position in the scanner assembly. Proper positioning requires that each succeeding frame be precisely moved into a corresponding position. This modification was completed by careful relocation of the scanner assembly mounting holes in the module

structure.

Alternatives to the presently used framing plates were considered. These plates, which maintain film flatness during scanning, must be moved periodically since the useful aperture is only 0.1 inches wide. No suitable alternate film clamping technique has been devised. Further testing experience with the present implementation may indicate the possibility of increasing the useful aperture width.

5.8 TASK 8- Scanner Frame Plate Synchronization

The film frame plates must be moved at the completion of every sequence of 400 - 1/4 mil scan lines (or 200 - 1/2 mil scan lines). The original design relied on independent timing, with movement of the frame plates at the end of a fixed period of time. This timing was controlled by a time delay relay designed for delay-on-drop-out operation. However, this approach proved inadequate because of high noise sensitivity of the relay. The relay frequently dropped out before its proper timing period had elapsed. The proposed solution was to provide positive interlock with the scanner carriage, eliminating the need for the relay, and permitting the scan mode to be started or stopped at any time during readout without losing synchronization. The hardware has been modified by mounting limit switches on the upper film frame plate, adding a cam and shaft to the frame plate drive, and changing the frame plate drive control circuitry.

5.9 TASK 9- Scanner Metric Accuracy Capability

The inherent geometric fidelity potential of a mechanical lead screw readout device was recognized early in the program. The present breadboard system was aimed at demonstrating overall system feasibility in the three functional modes of imaging, processing and scanning, but was not designed specifically to provide extremely high metric accuracy performance. However, preliminary studies concluded that the geometric distortion limitation due to all mechanical sources of error, should be only on the order of 0.02% over the entire format for a well designed solid state scanning system.

The basic metric accuracy capability of the experimental Planetary Film System scanner has been established as a result of laboratory tests. The experimental tests included the scanning of two different types of targets each containing transparent bars of calibrated lengths. One target type consisted of photographically reproduced clear strips on 35 mm film. The second target type consisted of slits made by removing the film between adjacent sprocket holes on 35 mm film. The ends of the strips or slits were sharply defined edges with high density areas surrounding the transparent areas.

Grid pattern targets were initially prepared for metric accuracy testing. Optical galvanometer recordings and oscilloscope photographs were obtained while dynamically scanning the grid pattern.

It was determined, however, that the response time of the recorder was too slow to permit accurate measurement and that sufficiently accurate measurements could not be made from the photographs. An alternate technique was devised which involved the use of an electronic counter to count the number of cycles of the modulated carrier. This technique was found satisfactory, since the 10 KHz carrier signal is detectable when a clear area is scanned, but not when high density areas are scanned.

The target bar lengths were measured on a Mann Optical Comparator to an accuracy of 1 micron. The clear film strip targets were 31.481, 51.114 and 63.286 mm in length; the film slit targets were 25.575, 39.807, 54.033, 63.523 and 68.269 mm in length. The targets were scanned dynamically and the number of 10 KHz carrier sine wave cycles detected by the phototransistor were counted on the electronic counter. Each target spacing was measured thirty times in this way and average values were calculated. An oscilloscope was used to monitor the detected sine wave signal to insure valid counter readings. Calculated distance values were compared to the actual optical comparator measurements to determine the percent error in distance.

The average percent error for the slit targets was 0.053% and the average for the imaged strip targets was 0.056%. The combined average for all the measurements was 0.054%. These results include

all sources of error, such as instrument error, reading error and scanner mechanical error.

The standard deviation was computed for the thirty measurements made for each target bar length. This provides an approximate indication of the repeatability of the scanner by giving a value for the dispersion of the data. The standard deviation ranged from 0.010% to 0.023%. The combined average standard deviation was 0.015%.

NASA-Langley, 1969 —— 14 CR-1358