General Disclaimer

One or more of the Following Statements may affect this Document

- This document has been reproduced from the best copy furnished by the organizational source. It is being released in the interest of making available as much information as possible.

- This document may contain data, which exceeds the sheet parameters. It was furnished in this condition by the organizational source and is the best copy available.

- This document may contain tone-on-tone or color graphs, charts and/or pictures, which have been reproduced in black and white.

- This document is paginated as submitted by the original source.

- Portions of this document are not fully legible due to the historical nature of some of the material. However, it is the best reproduction available from the original submission.

Produced by the NASA Center for Aerospace Information (CASI)

NASA GRANT NGR 11-002-085

BEHAVIOR OF NOZZLES AND ACOUSTIC LINERS IN THREE-DIMENSIONAL ACOUSTIC FIELDS

Quarterly Report for Period 1 March 1969 to 31 May 1969

Prepared by: Ben T. Zinn, Principal Investigator

Allan J. Smith, Jr., Research Engineer

B. Robert Daniel, Research Engineer

School of Aerospace Engineering

Georgia Institute of Technology

Atlanta, Georgia

N69-30293

(ACCESSION NUMBER)

14

(PAGES)

CR-98487

(NASA CR OR TMX OR AD NUMBER)

(THRU)

1

(CODE)

28

(CATEGORY)

FACILITY FORM 602

I. PROGRAM OBJECTIVES

The possibility of exciting a given acoustic mode in a liquid-propellant rocket motor depends on the nature of the interaction that occurs between this mode and the various physical processes and mechanical components that are present in the system. While some of the physical processes (e.g., the combustion process) will tend to "feed" energy into the wave and hence excite it, other processes will "act" as energy sinks and thus tend to attenuate the wave. The excitation of a given acoustic mode depends on the balance that exists among the various "gain" and "loss" mechanisms. Quantitative information about the various "gain" and "loss" mechanisms, as they are related to various modes, must become available before a reliable design procedure for liquid-propellant rocket engines can be established.

Of special importance is the need for quantitative understanding of the effect that the presence of a converging-diverging nozzle at one end of the combustor has upon the behavior of the natural modes of the combustion chamber. While it is generally accepted that the presence of a converging-diverging nozzle will tend to damp the longitudinal modes, its influence upon the transverse and three-dimensional modes is still open to question. Analytical studies[1,2] indicate that the response of a nozzle that is subjected to transverse or three-dimensional acoustic oscillations depends on its geometry, the mode and frequency of the oscillations, and the Mach number of the entering mean flow. Surprisingly, the results of these analytical studies also point out the possibility that under certain conditions the nozzle might actually "pump" energy into

the combustion chamber and thus have a destabilizing effect. These analytical predictions have never been verified experimentally; they have nevertheless been used in design by several major rocket manufactures. To improve existing design procedures it is important that these analytical predictions be checked experimentally.

The experimental determination of the response of several converging-diverging nozzles that are subjected to three-dimensional or transverse acoustic oscillation is one of the objectives of the present study. More specifically, it is the aim of this study to experimentally determine the dependence of the nozzle admittance relation, which quantitatively describes the wave-nozzle interaction, upon the nozzle shape, frequency and mode of oscillation, and upon the Mach number of the entering mean flow. Attaining this goal requires the development of special experimental facilities as well as new measurement techniques. Work performed during the first quarter of investigation was devoted to the design of the experimental facilities and the development of a theory that will provide the foundation for the new measurement techniques.

The second objective of this program is the investigation of the behavior of acoustic liners in simulated rocket environment. The majority of past studies of wave attenuation by Helmholtz resonators were limited to one-dimensional oscillations while the presence of mean flow past or through the resonators was not properly accounted for. There exists a need to experimentally determine the effect of various design parameters upon the attenuation caused by a liner when it is subjected to three-dimensional or transverse acoustic oscilla-

tions. Such information should be obtained from carefully controlled experiments in which the flow conditions inside an unstable rocket engine will be simulated as closely as possible. The cold flow rocket simulator that is presently being designed at Georgia Tech will provide the environment in which such experiments can be conducted. It is one of the objectives of this program to combine theory and experiments in the quantitative determination of the influence of liner design parameters and engine flow conditions upon the damping effectiveness of acoustic liners that are subjected to three-dimensional and/or transverse pressure oscillations. Such information is a prerequisite for the establishment of reliable design procedure for effective acoustic liners.

II. PROGRESS TO DATE

A. Theoretical Studies

1. Theoretical Considerations of Impedance Tubes For Three Dimensional Oscillations.

Classical theory which provides the foundation for the design of impedance tube experiments[3] assumes that the pressure oscillations are one-dimensional and that they are superimposed upon a quiescent medium. In order to achieve the objectives outlined in the introduction of this report the classical theory had to be modified to account for the presence of one-dimensional mean flow and three-dimensional pressure oscillations. It was the objective of this theoretical study

to obtain expressions that will describe the dependence of the amplitude of the three-dimensional pressure oscillations upon the "end-wall" admittance, the Mach number of the mean flow and the frequency and transverse mode of oscillation. Since this expression will depend upon the acoustic admittance presented to the waves at one end of the tube, then a change in this admittance will result in changes in the axial distribution of the pressure amplitude. If a relationship between the pressure amplitude and admittance function at one end of the tube is known, then for given experimental conditions the measurement of the axial variation of the pressure amplitude along the tube can be used to determine the admittance function at the end of the tube. In the present investigation such a method will be used in the experimental determination of the admittance function of supercritical nozzles that are subjected to pressure oscillations that depend on more than one space dimension.

During the first quarter of investigation a theory that resulted in an analytical expression that describes the axial variations of the amplitude of a three-dimensional pressure oscillation has been developed. This expression can be considered as the counterpart of the classical one-dimensional expression that is used in the design of one-dimensional impedance tubes. The theory shows that the standing three-dimensional wave pattern can be considered as a superposition of incident and reflected waves. Knowing the ratio of reflected and incident pressure amplitudes and the phase shift upon reflection, the standing three-dimensional wave pattern in the tube can be established.

The analysis that produced the expression for the amplitude of the three-dimensional pressure oscillations was based on the following

assumptions: (1) the unsteady flow is inviscid and irrotational; (2) the mean flow is one-dimensional, and its Mach number does not vary along the tube; and (3) wave attenuation along the tube is neglegible. An investigation is presently under way to determine whether some of these assumptions may be relaxed, and the analysis extended to consider more general flow situations.

The results obtained in the above-mentioned investigation were used to develop a computer program that will determine the admittance at the end of the tube (i.e., the nozzle admittance) from available experimental data. This computer program is divided into several parts. In the first part the variation of the pressure amplitude along the tube, for a given admittance at the end of the tube and for given operating conditions, can be determined. In another part of the program the admittance at the end of the tube can be computed from input data that consists of the values of the pressure amplitude at three locations along the tube. This computer program is used at present to determine the optimum axial locations of the pressure transducers that will be used in the actual experiments. In addition this program is currently utilized in an investigation directed at the determination of the errors in the calculated admittance function that will result from experimental errors in the measured pressure amplitude.

In a different study, another computer program that was originally used in combustion instability studies[2] has been modified to compute the nozzle admittance function for a given nozzle configuration and given operating conditions. This program computes the admittance function by numerically solving a system of differential equations originally de-

rived by Crocco[4] in his study of wave propagation in supercritical converging-diverging nozzles. The admittance functions computed in this program will be compared with those measured experimentally. Such comparison will shed the necessary light upon the applicability in rocket design of available nozzle theories.

2. Acoustic Liner Studies

During the first quarter all relevant literature on acoustic liners has been surveyed. This has been done in order to avoid unnecessary duplication of effort. It has been found that although several excellent theoretical studies (e.g., ref. 5) of the problem are presently available, no experimental study aimed at direct verification of the theoretical findings has been conducted to date. The literature survey revealed an interesting theoretical study[6], conducted by Brillouin, in which the liner response was related to properties (e.g., the effective mass and the effective resistance) of a single resonator. This study[6] which has been restricted to longitudinal oscillations has since been extended to consider the case of transverse oscillations. The theoretical results obtained in this study are presently being programmed for numerical computations. These results will serve as guidelines in the planning of the acoustic liner experiments.

Additional study on the interaction of a single Helmholtz resonator with finite amplitude sound waves has also been conducted. In this study the model of the resonator's flow field that was used in an earlier study[7] has been modified to better fit experimental

observations of the flow field[8]. The results produced in this experimental study are in excellent agreement with available experimental data on resonator resistance. The results obtained in this study will be used as guidelines in the experimental determination of the impedance of a single Helmholtz resonator that is subjected to transverse and three-dimensional pressure oscillations. It is also hoped that the results obtained in this study will serve as a first step in the development of a more comprehensive theory that will describe the behavior of arrays of Helmholtz resonators when the latter are subjected to finite amplitude pres ure oscillations.

It has recently been found that the Russian literature contains a considerable number of studies that may be relevant to our investigations of acoustic liners. These papers are presently being reviewed, and all relevant information will be gathered.

B. Design of Experimental Facilities

The main objective of this portion of the program was the design of an acoustic facility capable of closely simulating the flow conditions in an unstable liquid-propellant rocket engine. The choice of rocket simulator chamber diameter was determined by three factors: (1) the upper limit of frequency at which the acoustic power output of the acoustic driver drops off (1000 cps), (2) the frequency spacing between the various transverse acoustic modes of the chamber and (3) the blow-down time of the air supply system at the test Mach numbers. The chamber length (10 ft.) was selected to be consistent with previous impedance tube work at Georgia Tech. The selection of a chamber dia-

meter and chamber Mach numbers fixed the nozzle throat diameter. The remainder of the nozzle dimensions were selected to fit the requirements of available theoretical studies on the subject[4] as well as reflect current nozzle design practices. An injector with a showerhead orifice pattern is included as an integral part of this test apparatus. The driving characteristics of the combustion process are simulated by acoustic drivers that are placed 4-in. downstream of the injector. The chamber pressure has been determined by the requirement that the flow at the nozzle throat be sonic during the experiment. It can be seen from this short discussion that the design of this cold-flow facility attempted to simulate every aspect of the flow in an unstable rocket engine with the exception of the combustion process.

Airflow requirements for the experiment will be provided by an existing 3000 psia air supply with a storage capacity of 500 cubic feet. The testing time available for a continuous run is approximately 200 seconds with a 11.375-inch diameter impedance tube with a chamber pressure of 30 psia and a mean flow Mach number of 0.16.

The test apparatus and supporting facility are shown in Figure 1. The test apparatus consists of the injector, chamber (i.e., impedance tube), exhaust nozzle, acoustic liner, and acoustic drivers. The intended operating conditions for this facility include chamber Mach numbers up to 0.20 at total pressures in the chamber up to and including 50 psia. Regulator valves will maintain the desired pressure levels in the impedance tube and across the acoustic drivers.

The injector will be fabricated from a 12-in. ips blind flange with a 150 lb. ASA rating. The air will pass through the injector

plate via a showerhead injector orifice pattern. The main objective of this design is to keep the velocity distribution of the entering air as uniform as possible and at the same time keep the acoustic impedance of the injector as high as possible. The latter can be achieved by uniformly-spaced holes and a large pressure drop across the injector.

The chamber (i.e., the impedance tube) is fabricated from an aluminum pipe that has an inner diameter of 11.375-in., a wall thickness of 0.687-in., and an overall length of 10-ft. The acoustic drivers can be mounted on the chamber at a location 4-in. downstream of the injector face at three different tangential positions: 0°, 90°, and 180°. The first tangential mode can be made to spin or stand by properly selecting two of these three ports. Pressure oscillations within the chamber will be monitored by 7 or 8 - depending on the mode - pressure transducers, Photocon Model 403. There are 9 axial locations at which 2 transducers can be mounted at 0° and 270°. A tenth axial position, 5-inches upstream of the exhaust nozzle (or liner), has 4 pressure ports located at 0°, 120°, 180°, and 270°. Because a given mode has established characteristics, the selection of pressure transducer position will be determined by the mode to be tested. To date the chamber has been designed and ordered and we are presently rechecking our original design.

Two exhaust nozzles have been designed. The first nozzle has an entrance design Mach number of 0.08 while the second has an entrance design Mach number of 0.16. Both nozzles have a radius of curvature at the inlet and radius of curvature at the throat equal

to the chamber radius of 5.688-in. However, the convergent half-angle of the first nozzle is 15° while that of the second nozzle is 30°. The test results of the first nozzle are expected to agree more closely to Crocco's Nozzle Admittance Theory than the results of the second nozzle because of the small angle assumption of that theory. Originally, the design of both nozzles called for aluminum to be the nozzle material but subsequent cost analyses indicated that a reinforced plastic (i.e., fiberglass) would cut the cost of fabrication by a factor of three. Consequently, both nozzles are being redesigned for the new manufacturing technique. Both nozzle designs will be submitted to the NASA project engineer for his approval prior to the initiation of the final phase of the fabrication cycle.

Two different types of acoustic drivers will be used. For the no-flow experiments (reference data), two 75-watt, electro-magnetic University acoustic drivers will be used. For those experiments with flow, two 4000 watt, electro-pneumatic Ling drivers will be used.

There is one area of great concern at this time, namely the noise generated within the air stream by the normal shocks in the valves. The required pressure drops across the valves require the valves to operate critically, thereby inducing a considerable amount of noise to the entire system. Various techniques to suppress this noise are being investigated and show that this problem can be circumvented to a great extent. The residual noise can then be tolerated.

C. Expected Progress During Next Report Period

During this quarter theoretical investigations aimed at improv-

ing existing impedance tube theories and available measurement techniques will continue. Computer programs developed to date will be used in an error analysis that will determine the accuracy and reliability of the experimental data. The nozzle computer program will be used to numerically calculate the theoretical nozzle admittance function. The predictions provided by these calculations will be used for comparison with the experimental data. Theoretical investigations of acoustic liners will continue and liner experiments will be planned and designed.

Design and fabrication of all components of the experimental facility will be completed. Installation and preliminary checkout of various support systems will be initiated.

REFERENCES

1. "Three Dimensional Combustion Instability in Liquid Propellant Rocket Engines: A Parametric Study," co-authored with C. T. Savell and W. Mikolowsky, Proceedings of the 5th ICRPG Combustion Conference, CPIA publication No. 183, Dec., 1968.

2. "A Theoretical Study of Three Dimensional Combustion Instability in Liquid Propellant Rocket Motors," co-authored with C. T. Savell, to appear in the proceedings of the Twelfth International Symposium on Combustion.

3. Kinsler, L. E., Frey, A. R., "Fundamentals of Acoustics," second edition, John Wiley and Sons, New York, 1962.

4. Crocco, L., Sirignano, W. A., "Behavior of Supercritical Nozzles Under Three Dimensional Oscillatory Conditions" AGARDograph 117, 1967.

5. Oberg, C. C., Kuluva, N. M., "Acoustic Liners For Large Engines," Rocketdyne Report R-7792, March 1969.

6. Brillouin, J., "Sound Absorption By Structures With Perforated Panels," translated from French (by T. J. Schultz) appeared in Sound and Vibration during 1968 (exact issue unknown).

7. "A Theoretical Study of Nonlinear Dissipation in Acoustic Liners," Proceedings of the 4th ICRPG Combustion Conference, CPIA Publication No. 166, Vol. I, December, 1967, pp. 135-150.

8. Ingard, U., Labate, S., "Acoustic Circulation Effects and Nonlinear Impedance of Orifices," J. Acoust. Soc. of Amer., Vol. 22, No. 2, March 1950, pp. 211-218.

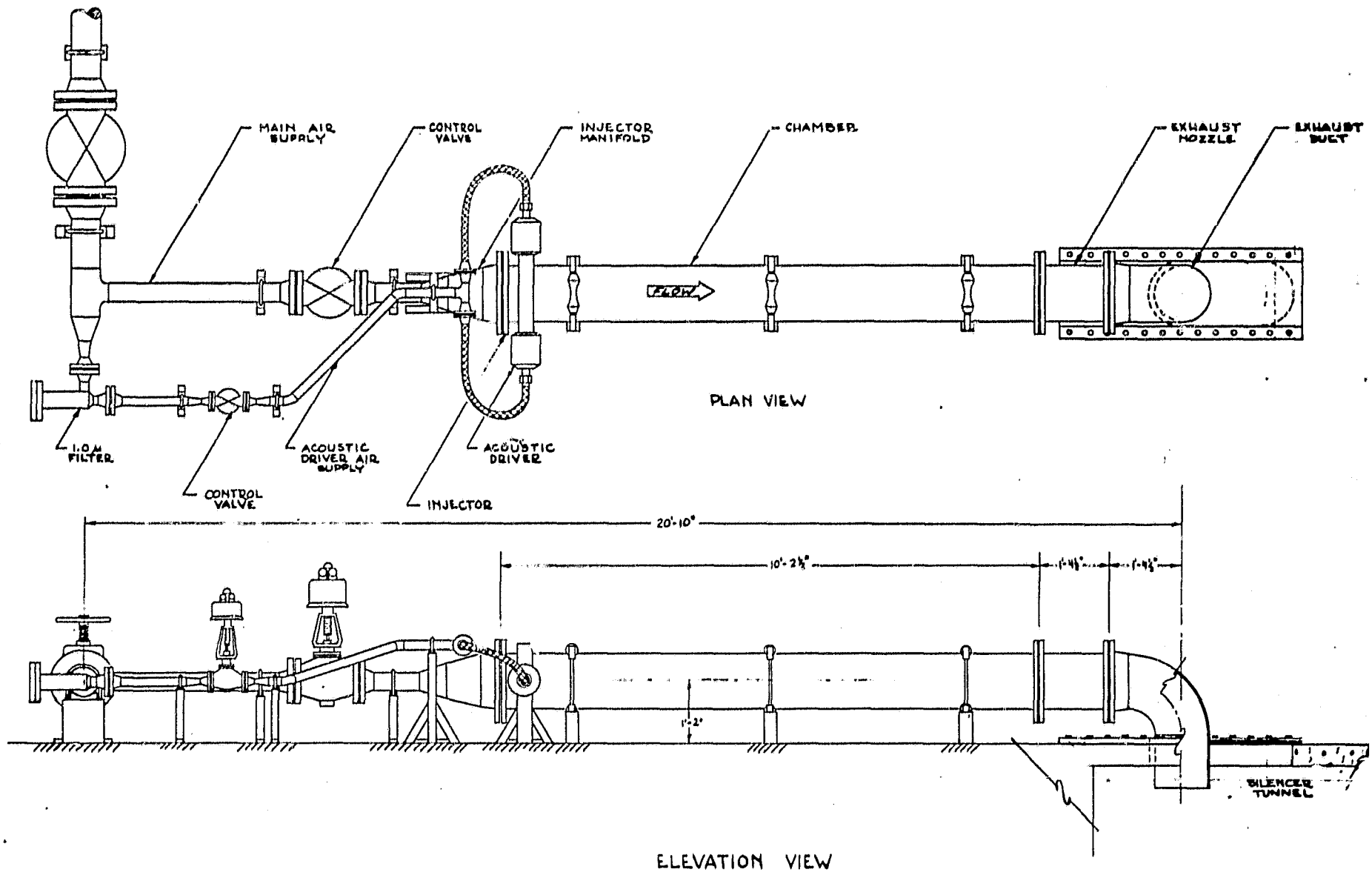

FIG. 1 EXPERIMENT EQUIPMENT SCHEMATIC