N 70 20656
CR 86331

THE OCULOMETER

A Summary Report

by John Merchant

October 1969

Prepared Under Contract No. NAS 12-531

Honeywell Radiation Center
Lexington, Massachusetts 02173

CASE FILE COPY

Electronics Research Center
National Aeronautics and Space Administration
575 Technology Square
Cambridge, Massachusetts 02139

Matthew Hillsman
Technical Monitor
NAS 12-531
Electronics Research Center
575 Technology Square
Cambridge, Massachusetts 02139

Requests for copies of this report should be referred to:

NASA Scientific and Technical Information Facility
P.O. - Box 33, College Park, Maryland 20740

THE OCULOMETER
A SUMMARY REPORT

by John Merchant

October 1969

Prepared Under Contract No. NAS 12-531
Honeywell Radiation Center
Lexington, Massachusetts 02173

Electronics Research Center
National Aeronautics and Space Administration
575 Technology Square
Cambridge, Massachusetts 02139

TABLE OF CONTENTS

FOREWORD 1
SUMMARY 1
INTRODUCTION 2
DESCRIPTION 4

APPENDICES

A 32
BASIC OCULOMETER SENSING PRINCIPLE 32

LIST OF ILLUSTRATIONS

FIGURE	TITLE	PAGE
1	New Retinal Method of Pupil/Iris Boundary Illumination	5
2	Contrast Between Pupil And Other Areas Of Eye	7
3	Pupil Area Of The Eye	8
4	Eye Image	9
5	Pupil And Corneal Tracking Scans	10
6	Oculometer Tracking System	11
7	Optomechanical Unit	12
8	Electronics Unit	13
9	Eye Tracking With The Oculometer	14
10	Portion Of X-Y Chart Recorder Print-Out Showing Typical Horizontal And Vertical 2X rms Noise Level Of Oculometer Plus Eye Dither For A Single Subject	15
11	Comparison Of Oculometer With Electro-Oculography	17
12	Two Oculometer Configurations	18
13	Breadboard Remote Oculometer: Opto-Mechanical Assembly	19
14	Breadboard Remote Oculometer: Opto-Mechanical Assembly and Mirror Control Electronics	20
15	Breadboard Remote Oculometer Opto-Mechanical Unit	21
16	Eye Direction Measurement With Remote Oculometer	23
17	Total System Block Diagram	24
18	Isometric Drawing & Parts List	26
19	Experimental Arrangement For Pupil Reflectivity Tests	29
20	Operating Contours	30
21	Microdensitometer Traces Of Pupil Gradient	31
22	Xenon Short Arc Ray Distribution	33
23	Relative Spectral Distribution	34
24	Radiance Of Varian Xenon Arc At Specified Wavelength	35
25	Basic Sensing Principle	36

THE OCULOMETER
A SUMMARY REPORT

by John Merchant

Honeywell Radiation Center
Lexington, Massachusetts

FOREWORD

This report summarizes the work performed under Contract NAS12 531. A detailed description of the work performed is given in the following individual reports:

Vol. 1. "Interim Report: Laboratory Oculometer," September 1968. NASA CR-1422

Vol. 2. "Interim Report: Design of a Breadboard Remote Oculometer," December 1968. NASA CR-1459

Vol. 3. "Interim Report: System Design Study for an Optimal Remote Oculometer for use in Operational Aircraft," December 1968. NASA CR-1562

Vol. 4. "Interim Report: Design of the Advanced Remote Oculometer," September 1969. NASA CR-86309

SUMMARY

The development of the Oculometer has been supported by NASA to provide a much needed means of accurately monitoring eye fixations without subject interference, and also as a possible new means of human control - eye control. With eye control the subject will perform a pointing or tracking task by eye, instead of by manual control.

In the early phases of the program, basic feasibility was established and the fundamental optical and electronic techniques developed. This work culminated in the delivery to NASA of first a proximate Oculometer and later a remote Oculometer. These units, and a similar unit at Honeywell, have been used in a variety of ways to show how this new, unattached, method of eye direction

sensing can be applied for various measurement and control applications:

- Man/Computer Interaction by Eye - The Oculometer was set up in front of a computer driven display. The subject looked at the display via the Oculometer which then reported the position of his fixation point on the screen to the computer. Fixation point display, dynamic control by eye, and display modification based upon eye fixations (i.e., a teaching machine situation) were demonstrated (by Project MAC, at the Massachusetts Institute of Technology).

- Laser Pointing by Eye - A two-axis steerable laser beam was controlled by the Oculometer as the subject looked at a scene via the Oculometer (by Honeywell and McDonnell Aircraft Company at McDonnell).

- Target Designation by Eye - The operator looks, via the Oculometer, at a CRT display from an infrared mapper. Target coordinates are generated automatically, and almost instantaneously, by the operator simply pushing a button whenever he sees a target--which causes the Oculometer output to be sampled. (By Honeywell for the Rome Air Development Center under Contract numbers F30602-68-C-0103 and F30602-69-C-0178.)

Following the successful development of the first breadboard Oculometer units, a design study of a remote Oculometer for aircraft use was performed. This remote Oculometer was intended by NASA for pilot eye fixation measurement and to be suitable (ultimately) for flight use with no interference being caused to the pilot.

In the final phase of this contract, a design was developed for the optomechanical part of a remote Oculometer intended for laboratory or simulator use, and capable of being developed easily, by careful packaging design, into a flight unit which would fit into the space normally occupied by a standard 3-inch panel instrument.

INTRODUCTION

The Oculometer is an electro-optical device that measures the direction of pointing of the human eye. It is not attached to the subject, and operates with essentially invisible infrared radiation.

The Oculometer can find application in cases where eye direction is to be measured with a minimum of interference to the subject -e.g.,

(a) psychological and physiological monitoring

(b) eye control - that is the direct control of target acquisition/tracking systems by Oculometer signals defining the direction of pointing of the operator's eye.

The Oculometer has been developed from the concept proven in an earlier breadboard unit. This demonstrated the feasibility of measuring eye direction according to the basic Oculometer sensing principle, namely that eye direction is defined by the position of a corneal reflection (of the radiation source within the Oculometer) relative to the center of the pupil (Appendix A).

The work, under the present contract, has proceeded in three phases:

Phase 1, March 1967 - April, 1968.--A laboratory Oculometer was constructed in the proximate configuration. It utilized invisible IR illuminating radiation and a new "bright pupil' illumination technique. (Reported in "Interim Report: Laboratory Oculometer, September, 1968).

Phase 2, July, 1968 - December, 1968.--The proximate Oculometer was converted to a breadboard remote configuration. This unit operates at 3 feet from the subject and has a two-axis moving mirror system to allow 6 inches of head motion in two axes. (Reported in "Interim Report: Design of a Breadboard Remote Oculometer," December, 1968).

A design study was performed of a remote Oculometer for aircraft use. (Reported in "Interim Report: System Design Study for an Optimal Remote Oculometer for use in Operational Aircraft," December, 1968).

Phase 3, March 1969 - October, 1969.--A design was completed for the optomechanical part of an Oculometer incorporating a new xenon illuminator, an automatic focusing system, and a high performance two-axis moving mirror system. Experimental work was performed to evaluate two xenon short arc lamps, and also to investigate the detailed characteristics of the optical signal received by the Oculometer from the eye. (Reported in "Interim Report: Design of Advanced Remote Oculometer," September, 1969).

The principal results of the work to date are:

(1) Development of an electro-optical system that can rapidly acquire and track eye detail, and compute eye direction, several feet from the subject if desired, without requiring clamping or any other attachment to the subject.

(2) Construction of laboratory Oculometers in the proximate and remote configurations.

(3) Completion of the system design (with detailed experimental investigations in selected areas) of the optomechanical part of a remote Oculometer. A remote Oculometer for aircraft which will fit into a standard aircraft instrument panel can be based upon this design.

DESCRIPTION

Phase 1: Laboratory Oculometer Development

New illuminating technique.--In the prior breadboard system the eye was illuminated by visible radiation to show the iris as relatively bright and the pupil relatively dark. A new, and improved illumination technique was used in the proximate laboratory Oculometer in which the eye is illuminated with almost invisible IR radiation to show the pupil as a bright uniform disc (together with a small highlight corneal reflection) against a virtually black background.

The new illumination technique is illustrated in principle in Figure 1. Light is projected from a small light source onto the retina via a beam splitter in front of the eye. An image of the light source is formed on the retina and a fraction of the incident radiation is scattered back from this point on the retina. Some of the scattered rays are collected by the eye lens and then refracted in such a way that when emerging from the eye, the rays retrace, exactly, the path of the incident rays from the light source. The emergent rays are passed through the beam splitter to a lens, which is located at the virtual image of the light source in the beam splitter. Since the emergent rays are focussed back, by the

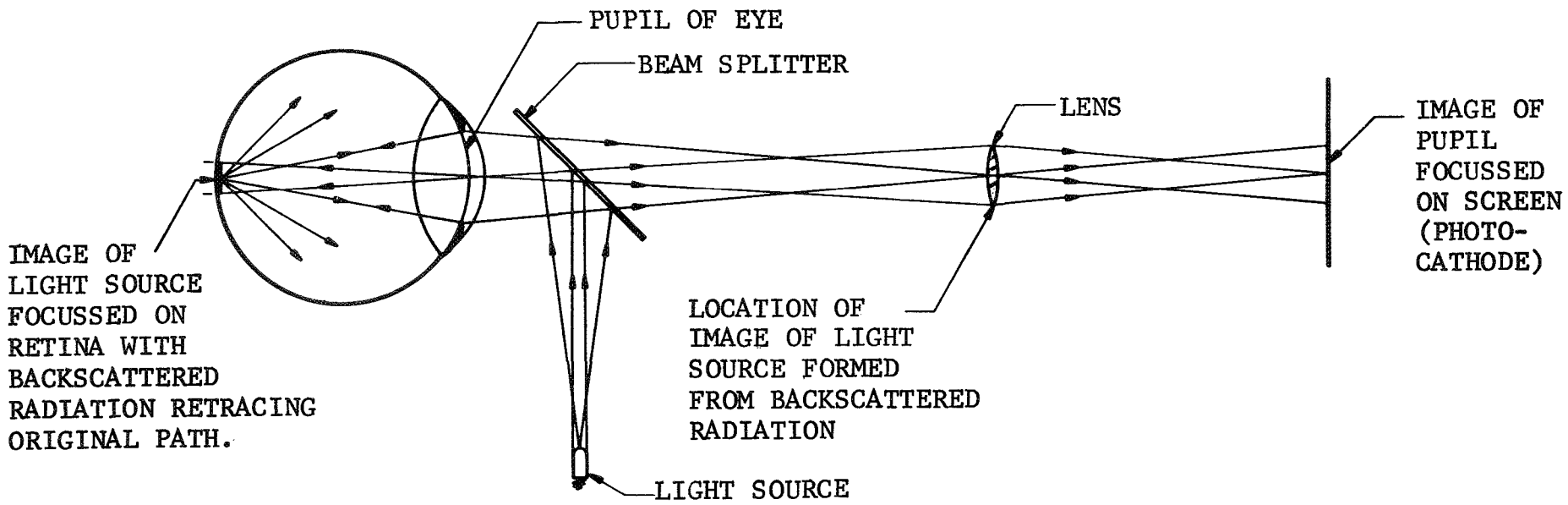

Figure 1.--New Retinal Method Of Pupil/Iris Boundary Illumination

eye lens, to the light source, the emergent rays passing through the beam splitter converge to a small area at the lens, corresponding to the small area of the light source. The power of the lens is chosen to cause an image of the pupil to be focused onto the screen (e.g., photocathode).

A prime advantage of the new method is that the f/number (typically 50) of the collecting optics (i.e., the aperture of the lens in Figure 1) does not govern, in a conventional way, the brightness of the pupil image on the screen. The dominant factor in this respect is the f/number of the eye lens: f/7 for a 3 mm pupil. This fact makes possible the use of a high f/number optical system which yields, in turn, the advantages of:

(1) good depth of focus,

(2) improved resolution.

Moreover, with a high f/number optical system, all other regions of the eye, even though they are illuminated by the same light source, do not show up brightly on the screen (Figure 2). Thus the pupil area stands out very clearly and uniquely (Figure 3), thereby facilitating acquisition and reliable tracking.

Proximate Laboratory Oculometer.--In this Oculometer, the new, 'bright pupil' illumination technique generates an eye image (as illustrated in Figure 4) at the photocathode of an image dissector tube.

A coarse raster scan acquires the eye detail, pupil/iris boundary and corneal reflection, and then a double circular scan tracked this detail (Figure 5). The basic electronic system block diagram is shown in Figure 6.

The optomechanical part of the Proximate Oculometer is shown in Figure 7 and the associated electronics unit in Figure 8.

Results.--An early experiment with the Oculometer is shown in Figure 9. This graphically illustrates how the eye can be used, by means of an Oculometer, to perform accurate designation.

Figure 10 shows the output of the Oculometer plotted on an x-y recorder as the subject looks successively at a matrix of fixation points 2 degrees apart.

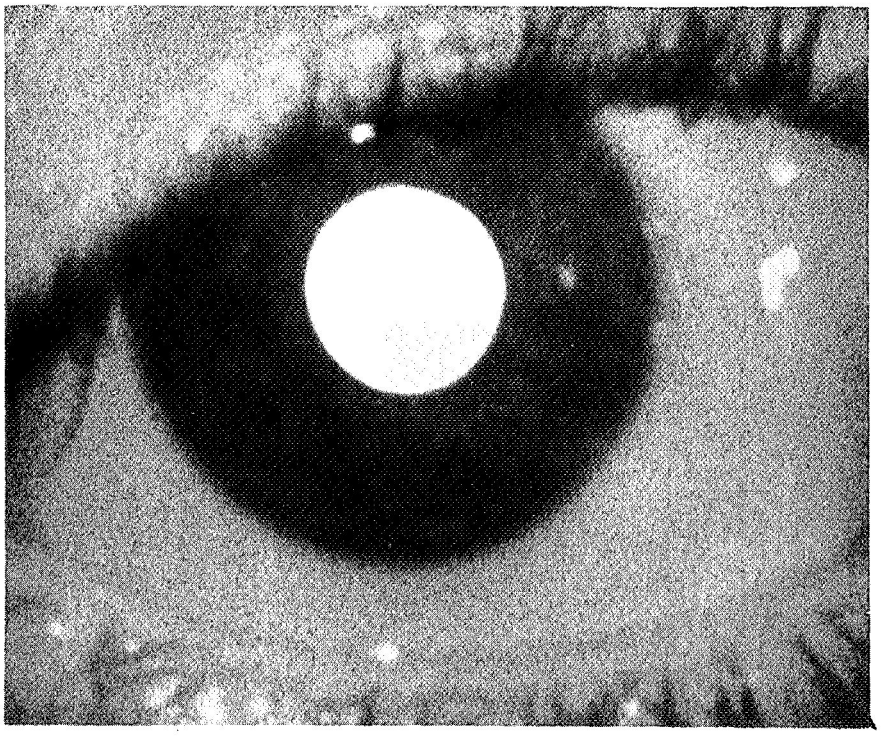

Figure 2.--Contrast Between Pupil And Other Areas Of Eye

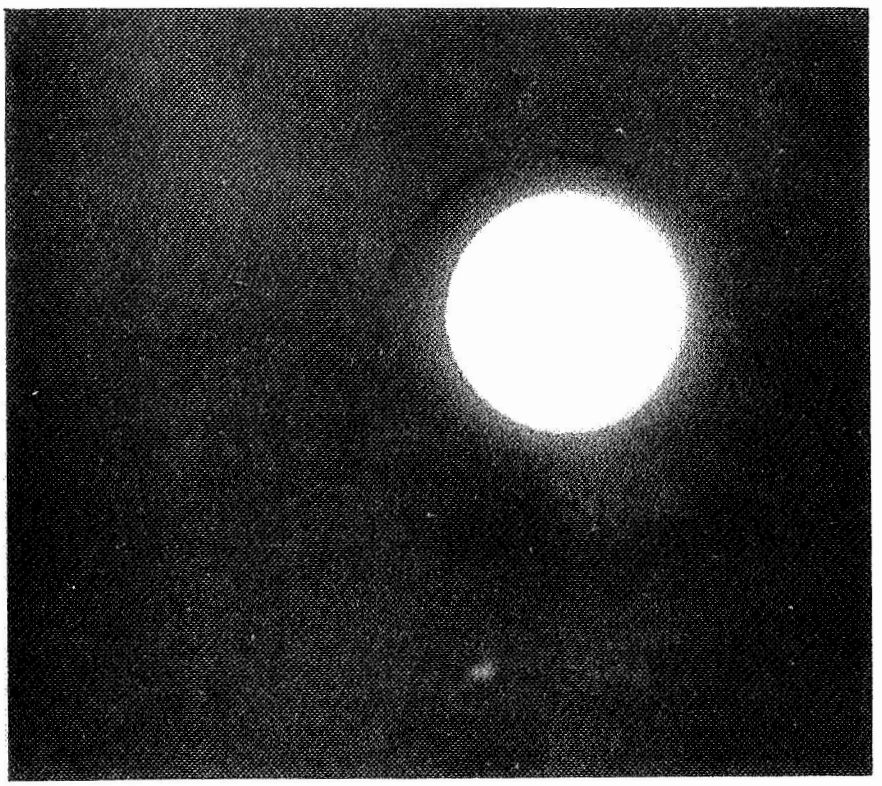

Figure 3.--Pupil Area Of The Eye

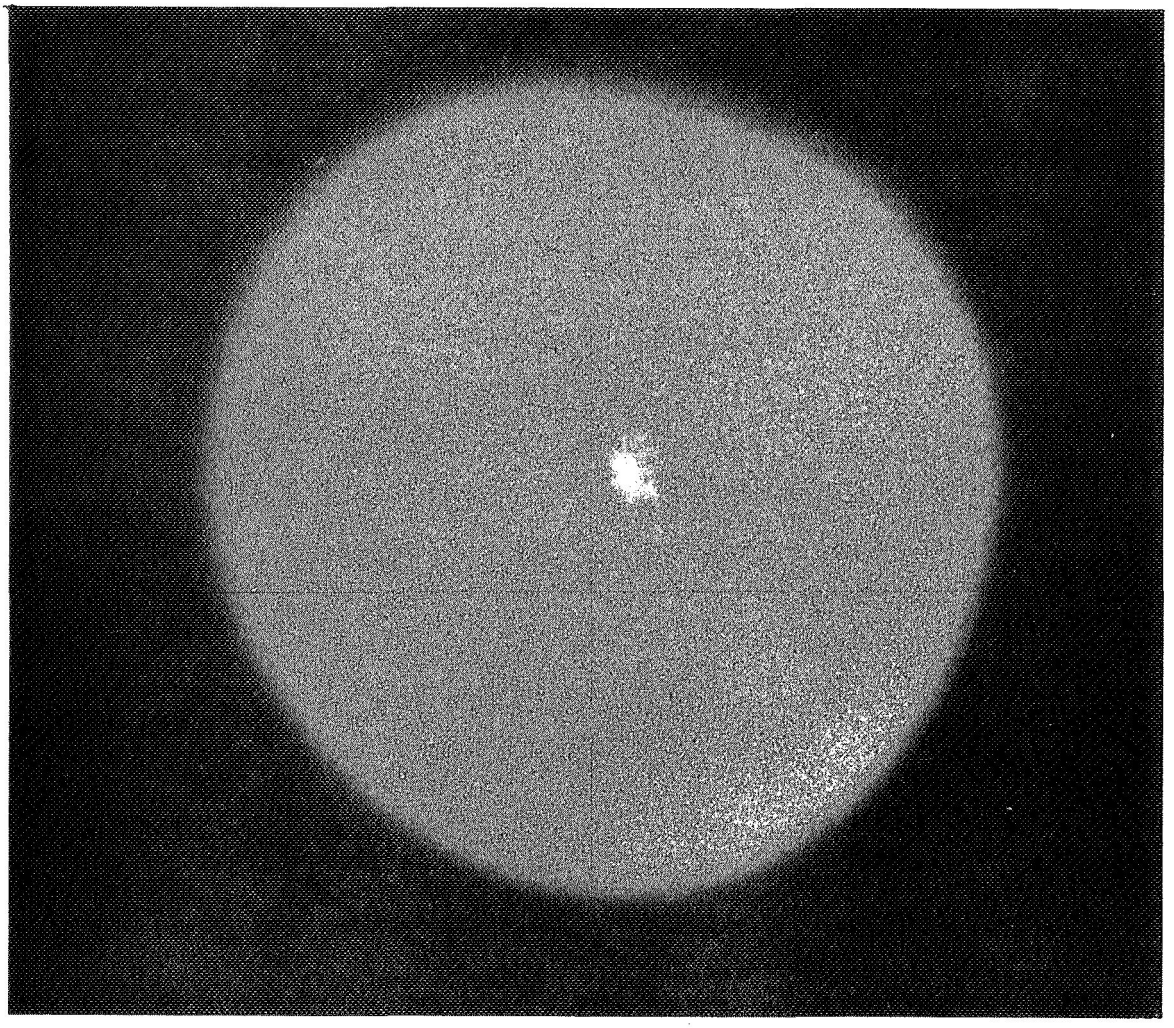

Figure 4.--Eye Image

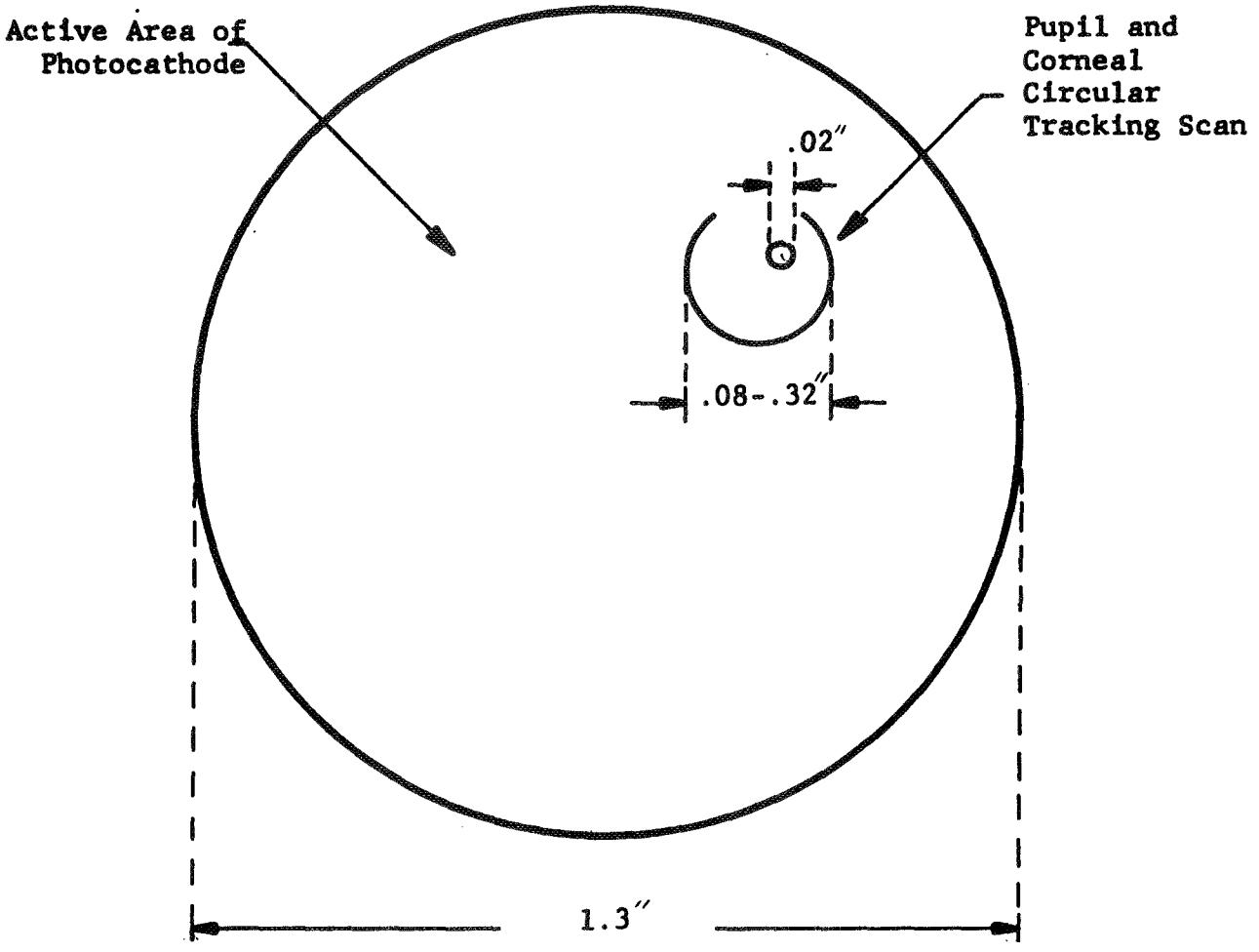

(All dimensions are in inches and are referred to the Eye Space)

Figure 5.--Pupil And Corneal Tracking Scans

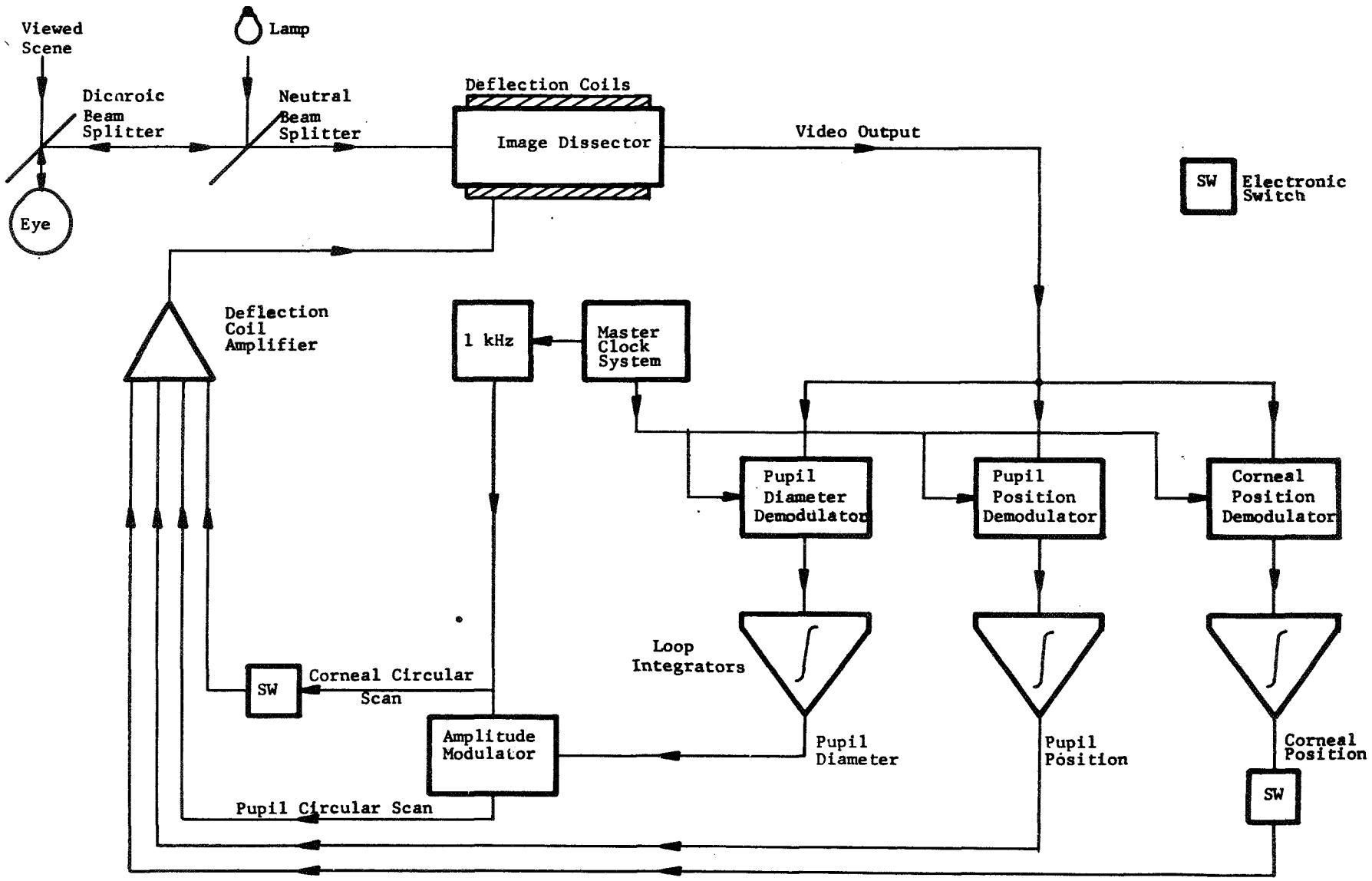

Figure 6.--Oculometer Tracking System

Figure 7.--Optomechanical Unit

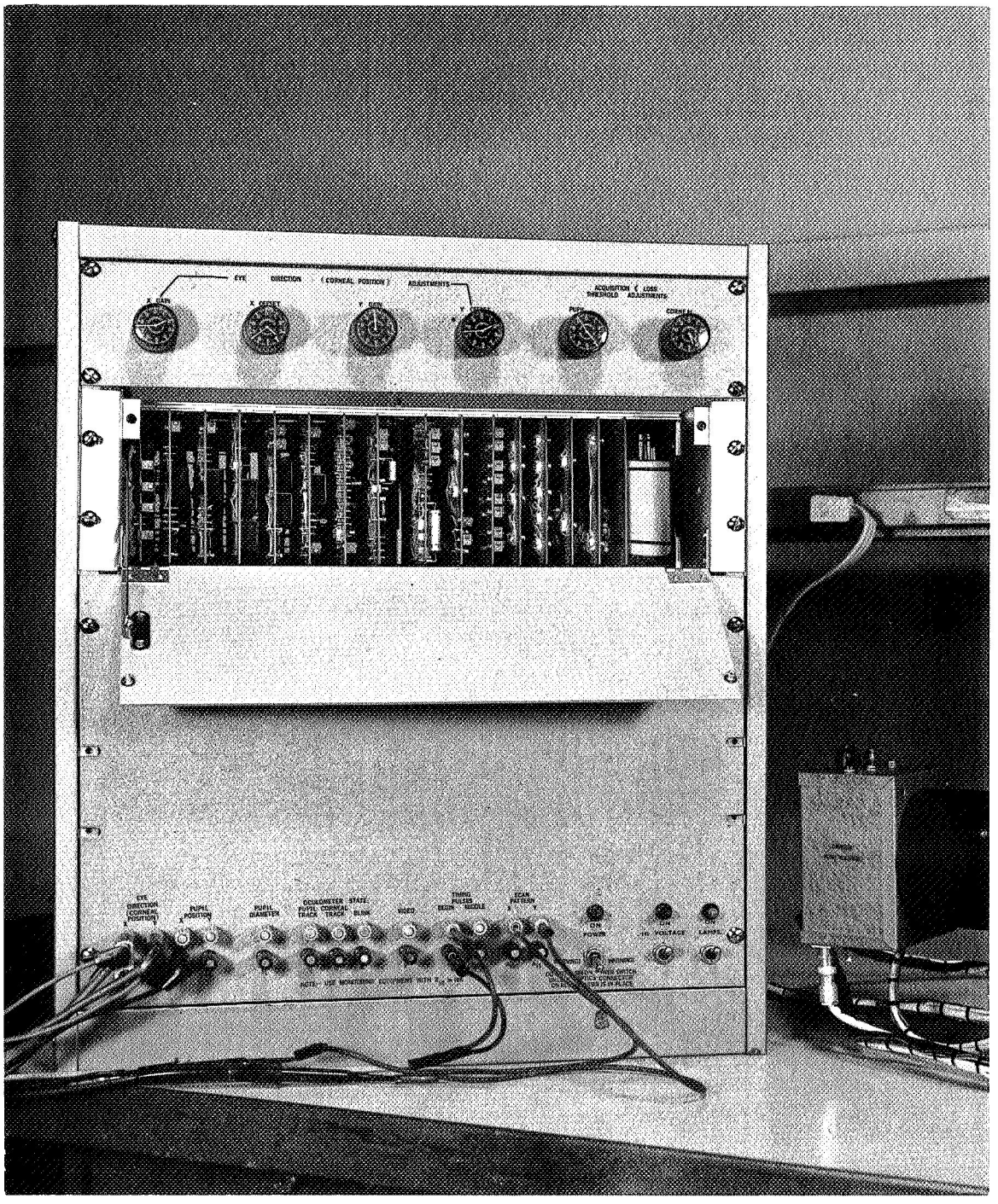

Figure 8.--Electronics Unit

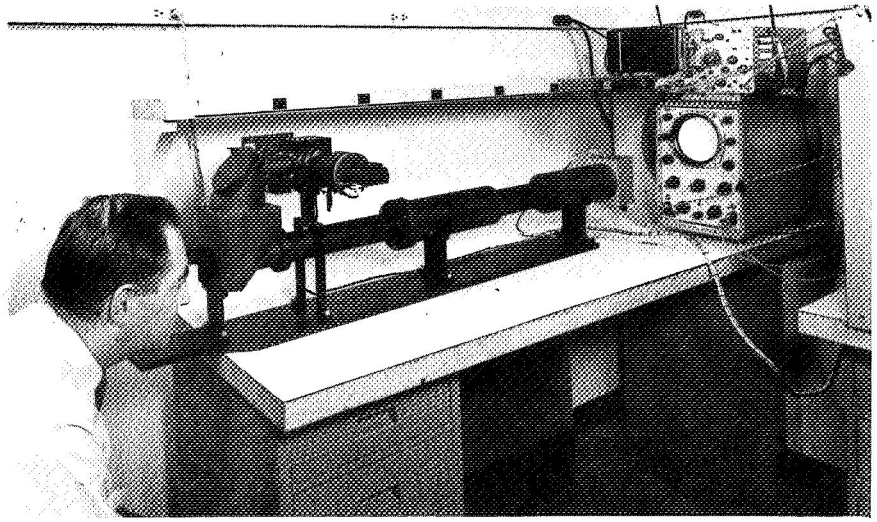

A

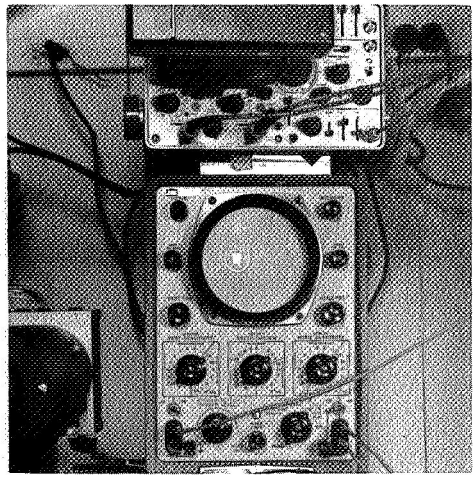

B

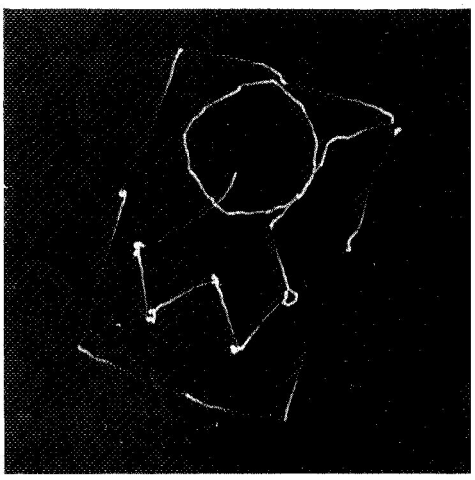

C

The operator (A) scans his eye over the outer edge of the Oscilloscope (B), the circular edge of the CRT Screen, and then fixates at each of the six control knobs. The Oculometer measures the direction of his eye during this operation and a record of the Oculometer output (C) shows an "eye-drawing" of the Scope.

Figure 9.--Eye Tracking With The Oculometer

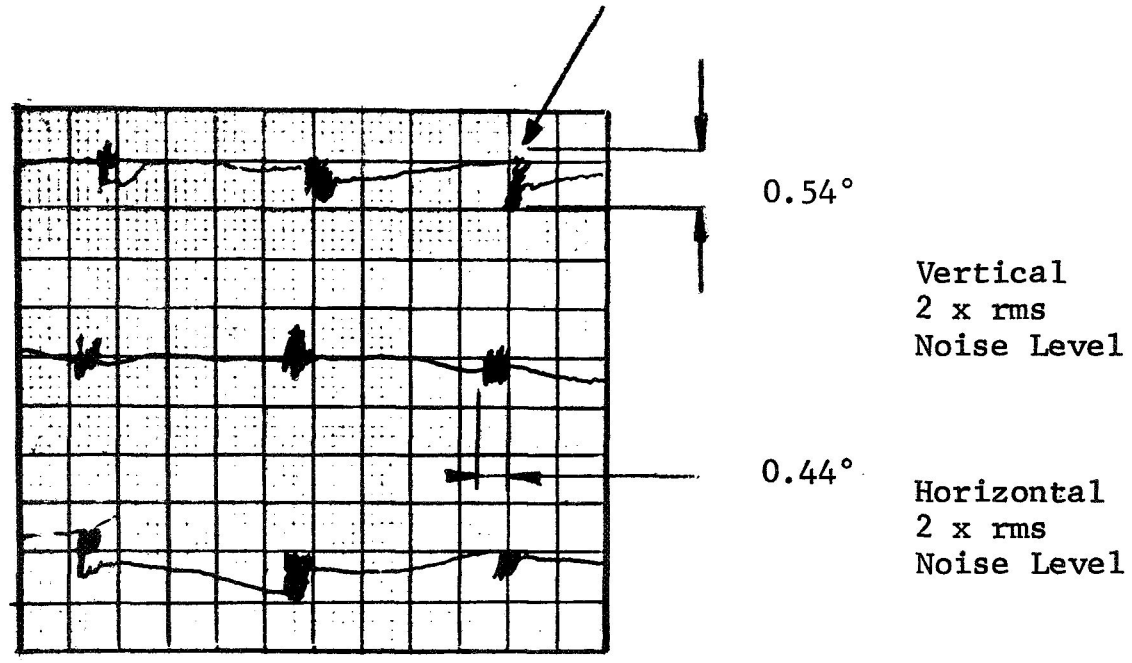

Figure 10.--Portion Of X-Y Chart Recorder Print-Out Showing Typical Horizontal And Vertical 2X rms Noise Level Of Oculometer Plus Eye Dither For A Single Subject.

Figure 11 shows the x eye direction output of the Oculometer together with a simultaneous EOG recording of the x eye direction as the subject executes a 5-degree step displacement followed by a series of 1-degree steps. The Oculometer accurately follows the fastest eye motion and also the noise level of the Oculometer is of the same order as the involuntary nystagmus of the eye.

Phase 2: Breadboard Remote Oculometer Program and Design Study

Breadboard Remote Oculometer.--The Oculometer developed under Phase 1 was in the proximate configuration (Figure 12a). Another possible version of the Oculometer, called the remote Oculometer, is shown in Figure 12b. Here the optics are designed such that the eye is tracked when it is several feet from the device; otherwise the two versions of the Oculometer are the same. If the remote version of the Oculometer is used, a moving mirror may be utilized to move the field of view of the instrument (typically 1-inch diameter) in synchronism with movements of the subject. Thereby the device can measure eye direction under a reasonably large range of lateral head movement by the subject, e.g. up to several feet. The remote Oculometer thus offers significant advantage where, (1) the measuring device must be located several feet from the subject, and (2) where the subject must be afforded a large range of lateral head movement.

In order to prove the feasibility of the remote Oculometer concept, a breadboard of the device was designed and fabricated. Specifically, this involved the design and fabrication of (1) a new optomechanical unit appropriate to the remote Oculometer, (2) a two-axis moving mirror assembly and (3) an additional electronics unit with which to control the moving mirror rotation angles. When the above three items were completed, they were integrated with the electronics unit originally built for the laboratory Oculometer. Testing of the assembled remote Oculometer indicated that the expected performance had been achieved. Figures 13, and 14 are photographs of the breadboard device (exclusive of the laboratory Oculometer electronics). Figure 15 shows a labeled line drawing of the remote Oculometer.

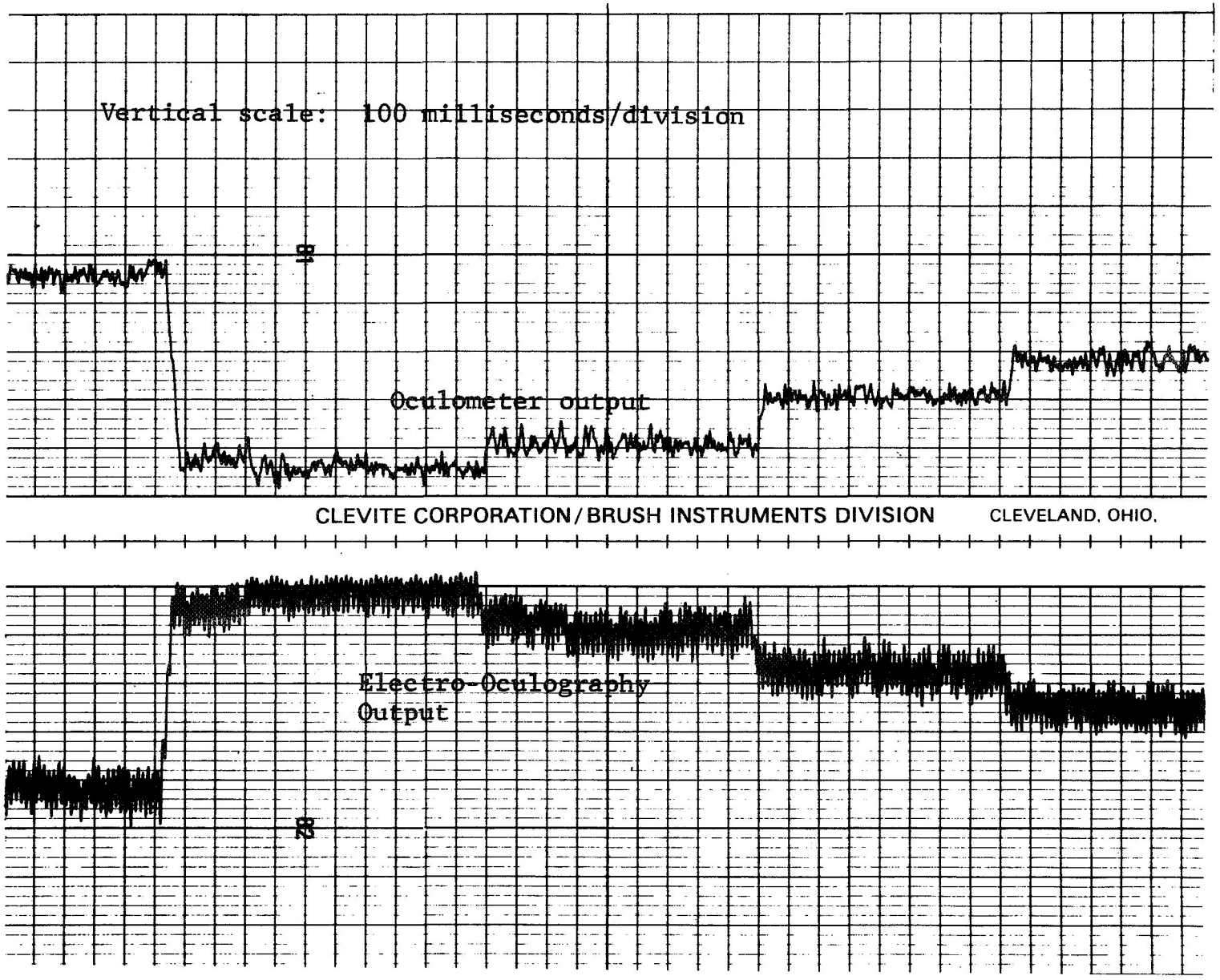

Figure 11.--Comparison Of Oculometer With Electro-Oculography

A) LABORATORY PROXIMATE OCULOMETER

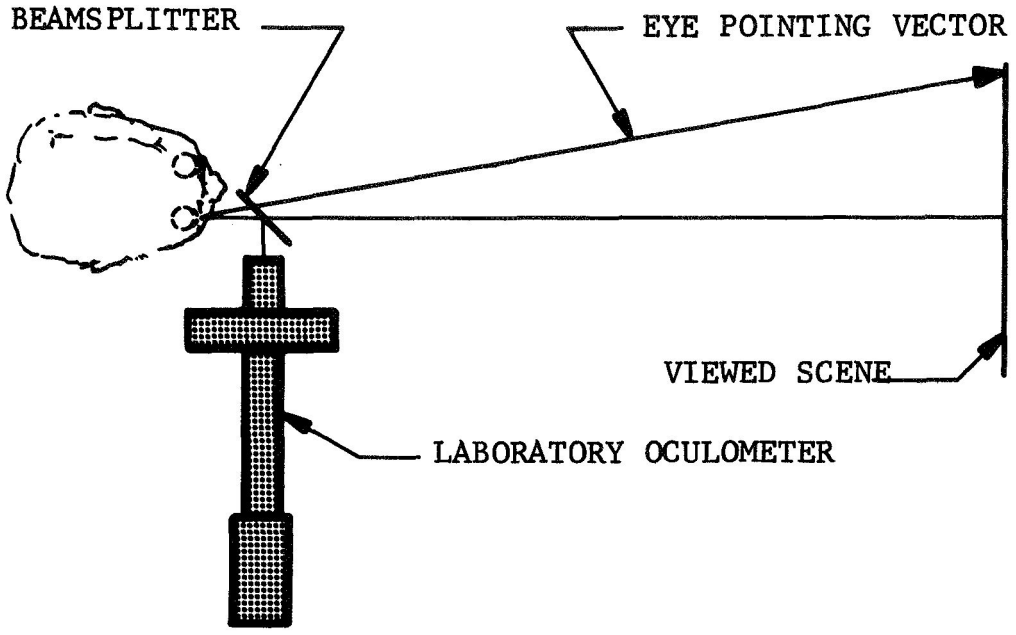

B) REMOTE OCULOMETER

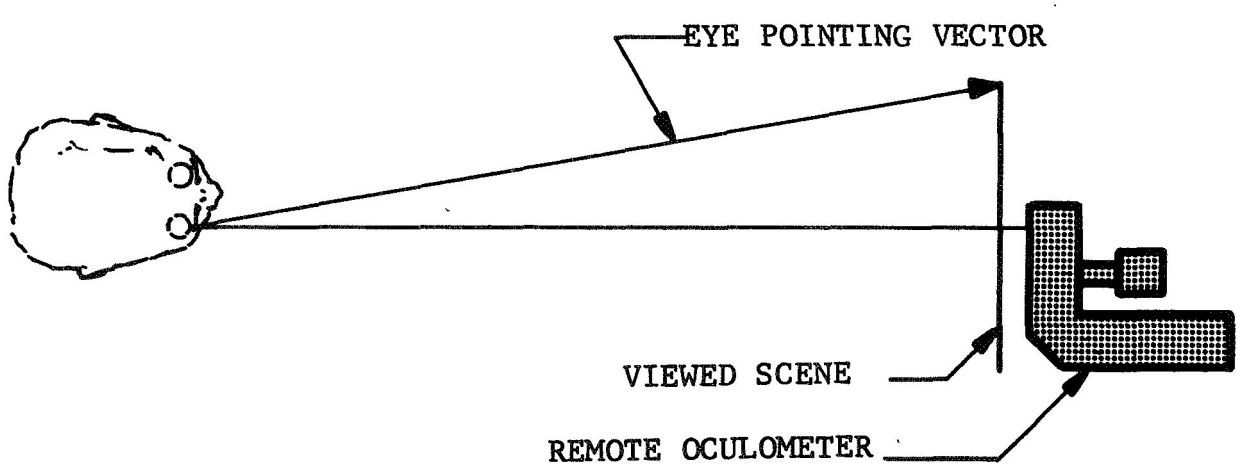

Figure 12.--Two Oculometer Configurations

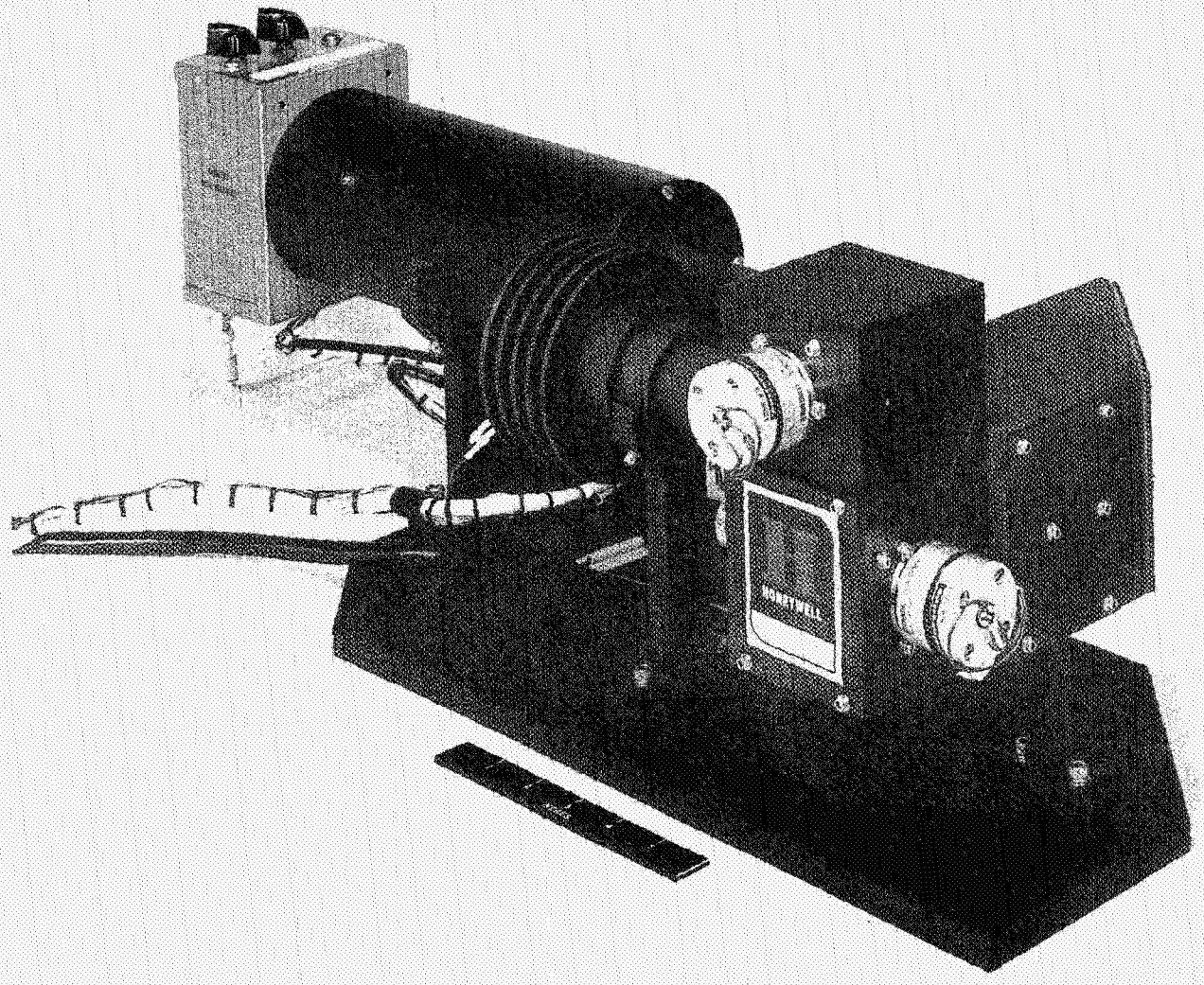

Figure 13.--Breadboard Remote Oculometer: Opto-Mechanical Assembly

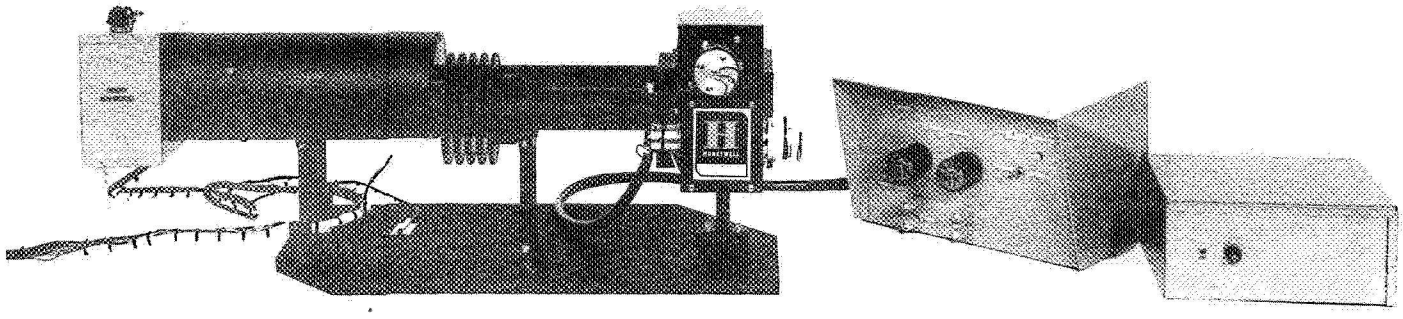

Figure 14.--Breadboard Remote Oculometer-Opto-Mechanical Assembly and Mirror Control Electronics

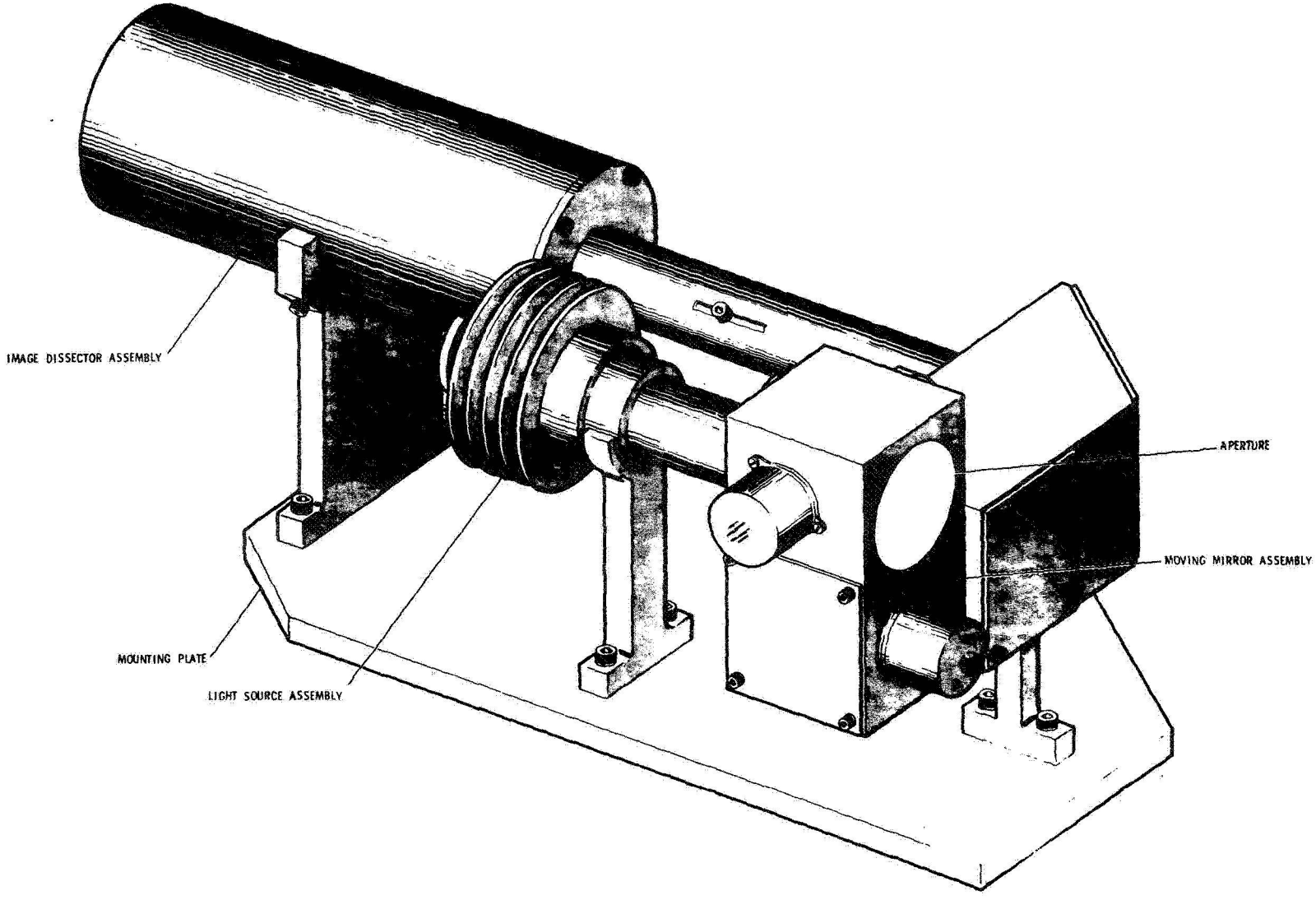

Figure 15.--Breadboard Remote Oculometer Opto-Mechanical Unit

In the operation of the remote Oculometer, the eye is illuminated by the new "bright pupil" technique, and the eye area is imaged onto the sensitive area of an image sensor. The image sensor scans the boundary of the pupil and the corneal reflection. A measurement of the distance between the pupil centroid and the corneal reflection centroid is thereby made. The geometry of the Oculometer optics and the eye optics is such that this distance is proportional to the subject's eye pointing direction. In the remote Oculometer configuration, this distance is proportional to the angle θ between the eye pointing vector and the vector between the eye and the collection aperture of the device; this is shown in Figure 16. Thus, if the eye is fixating at a given object and the head moves in the eye space, the Oculometer output will not change. A complete discussion of the relation between eye direction and the pupil-corneal reflection distance is presented in "Interim Report: System Design Study For An Optimal Remote Oculometer For Use In Operational Aircraft." It should be noted, that in the laboratory, or proximate, Oculometer design, the pupil-corneal reflection separation is proportional to the angle ψ between the eye direction vector and the device optical axis. With reference to Figure 16, this angle ψ is equal to $(\theta - \phi)$.

The basic electronic system block diagram for the remote Oculometer is shown in Figure 17.

Design study.--In this work a number of specific design factors were investigated in relation to a remote Oculometer for aircraft use. These involved:

- the range of allowable eye motions, as defined by pupil obscuration and corneal reflection integrity
- computation of eye direction from Oculometer measurements
- the effect of head roll
- eye safety (safe retinal irradiance levels)
- analysis of the bright pupil technique
- definition of the optical signal
- characteristics of xenon short arc lamps
- subjective visibility of the Oculometer source
- selection of operating wavelength
- photocathode damage
- use of an image intensifier/image dissector combination
- dynamic characteristics of the Oculometer in typical aircraft vibration environments
- moving mirror system analysis
- telephoto optical system
- helmet marker

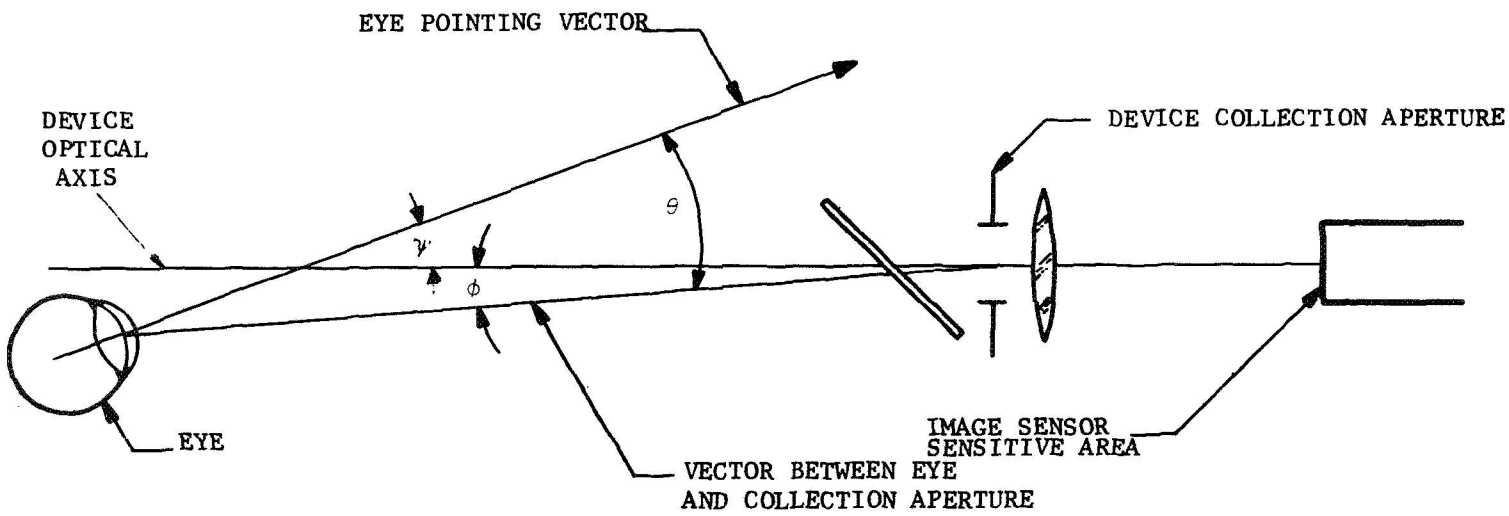

Figure 16.--Eye Direction Measurement With Remote Oculometer

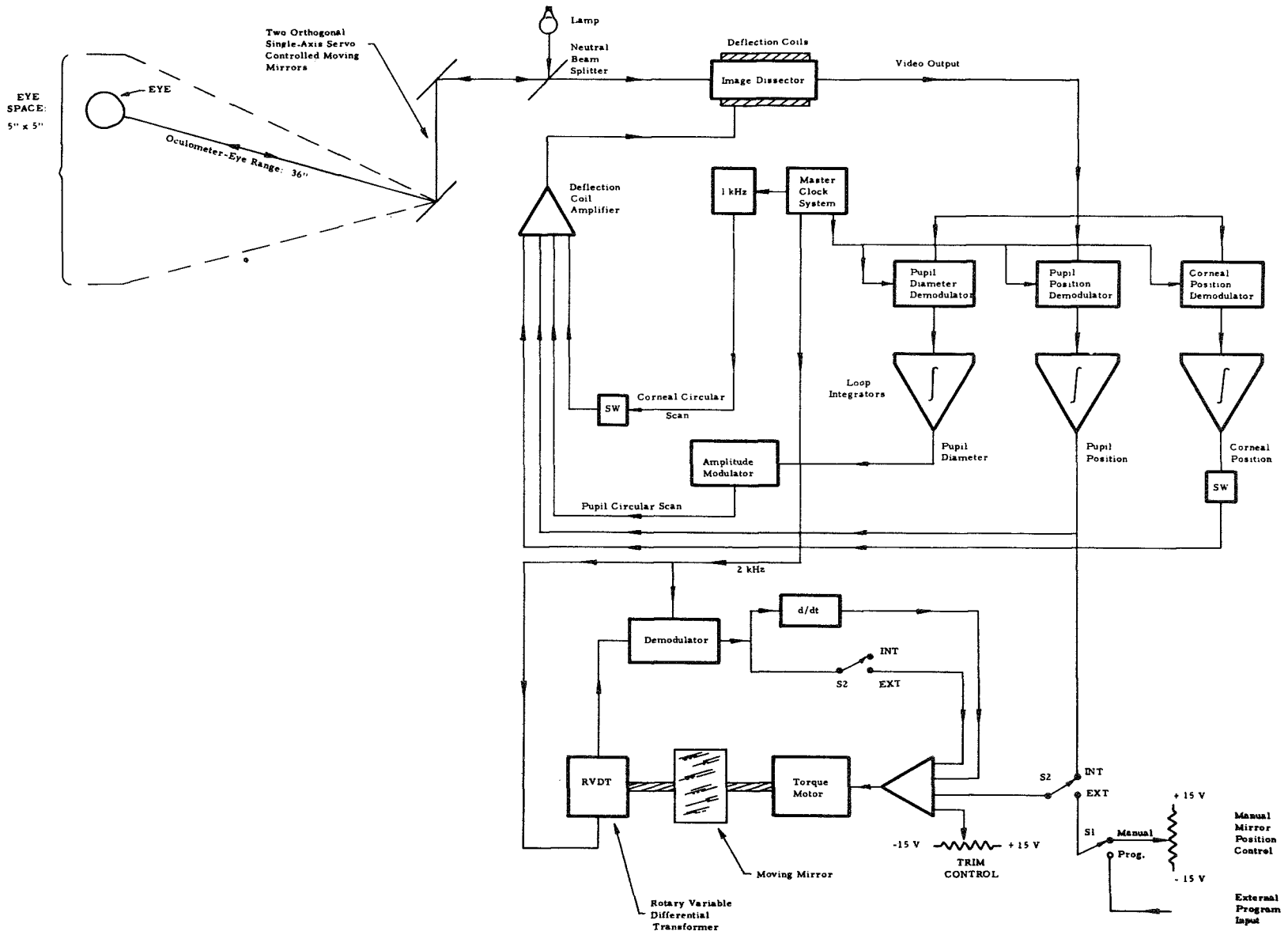

Figure 17.--Total System Block Diagram

Phase 3: Remote Oculometer Design

This phase of the program resulted in the design of the optomechanical part (Figure 18) of a remote Oculometer intended for laboratory or simulator use, and capable of being developed by careful packaging design , into a flight unit which would fit into the space normally accompanied by a standard 3-inch aircraft panel instrument. As part of this design effort, experimental work has been performed to provide certain optical design information.

The principal results of the design program were:

1) Detailed characteristics of the optical signal received by the Oculometer from the eye.

2) Optimized optical design allowing for operation with almost all subjects under almost all conditions.

3) Development of a new fail safe xenon arc illumination system, for improved ambient discrimination.

4) Development of an accommodation sensing technique that is incorporated into the new Oculometer design.

5) Design of an automatic focusing system to permit axial head motions.

6) Specification of all optical elements, and their relative placement in the new remote Oculometer.

Autofocus system.--A special autofocus sensor system was incorporated into the design in order to permit ±6 inches of head motion in the z axis. The magnitude and sign of any out-of-focus condition is to be determined by sensing the effect of an unsymmetrical rotating aperture on the corneal reflection image.

For the purpose of explanation, assume that the corneal reflection is a point source and - apart from out-of-focus blur - is imaged as a point. Under these conditions, the image of the corneal reflection in the general out-of-focus condition, is a sharp image of the defining aperture. The size of the image is proportional to the degree of out-of-focus, and the orientation of the image relative to the orientation of the defining aperture

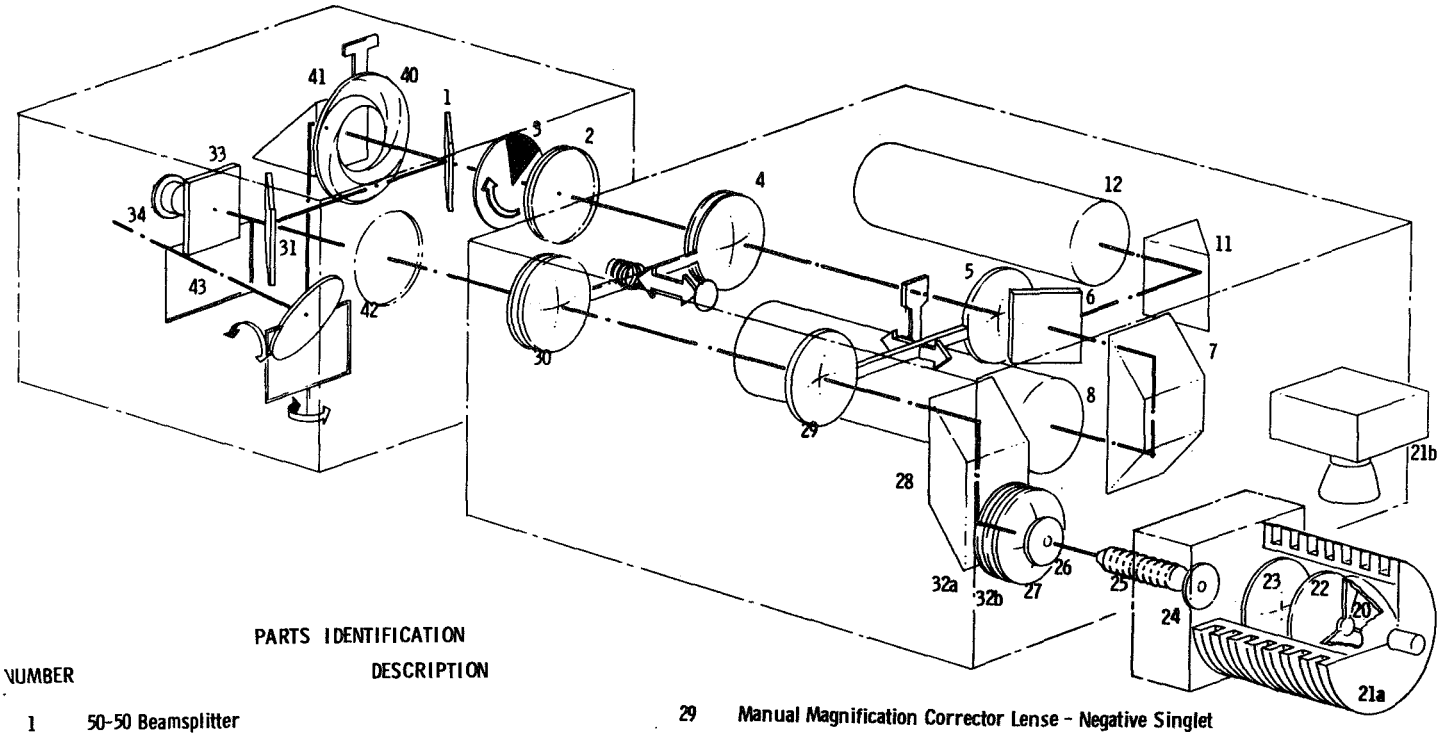

PARTS IDENTIFICATION

NUMBER	DESCRIPTION
1	50-50 Beamsplitter
2	Narrow Band Infrared Filter
3	Rotating Occluded Aperture
4	Automatic Focussing Lense Positive Doublet
5	Manual Magnification Corrector Lense Negative Singlet
6	75-25 Beamsplitter
7	Trapezoidal Prism-Specialized Use
8	Image Dissector 5 Mil Aperture
11	Right Angle Prism
12	Scanning Photomultiplier
20	Xenon Arc Source Varian X6163S
21	Cooling Fins And Blower
22	Narrow Band Infrared Filter
23	Aspheric Condensing Lense
24	Aperture
25	Totally Incoherent Fiber Optics Bundle
26	Aperture
27	Aspheric Condensing Lense
28	Rhomboidal Prism-Specialized Use
29	Manual Magnification Corrector Lense - Negative Singlet
30	Automatic Focussing Lense Positive Doublet
31	Narrow Band Hot Mirror
32	Broad Band Filter
33	Narrow Band Hot Mirror
34	Silicon Detector
40	Manually Variable Iris Diaphram
41	Right Angle Prism
42	Scanning Mirror - Dual Axis
43	Exit Window

Figure 18.--Isometric Drawing & Parts List

depends upon the sign of the out-of-focus condition. In the normal operation of the Oculometer, the corneal reflection image is scanned around the image dissector aperture in a circular scan of diameter equal to the diameter of the aperture. It is clear that, in the ideal case, the image dissector output will have a sinusoidal modulation impressed upon it. The magnitude of this modulation will vary with the out-of-focus condition. The phase of the sinusoid will change as the system goes through the exact focus condition.

The out-of-focus error signal derived from this modulation will drive the autofocus motor, which in turn will control the axial portion of the positive lens in the telephoto lens system.

Optical signal measurements.--The basic function of the Oculometer is to electro-optically track both the pupil/iris boundary of the eye and also a corneal reflection formed by the eye. The eye is illuminated, by the Oculometer, with near IR (virtually invisible) radiation so that a sufficiently intense image of the eye is formed at the photocathode of an image dissector tube. The image dissector acquires and tracks the pupil iris boundary and the corneal reflection detail in the eye image existing at the photocathode.

A conventional eye illumination system would show the pupil as a black disc set against a relatively bright eye. The "bright pupil" illumination technique used in the Oculometer, however, shows the pupil as bright and shows the surrounding regions of the eye as relatively dark. This bright pupil has been successfully used in the proximate and remote Oculometers.

The technique has been investigated experimentally in phase 1 and analyzed theoretically in phase 2. The latter analysis has indicated the need for additional experimental work in order to formulate an optimum design.

The important performance parameters of the bright pupil technique in this respect are:

a) the effective pupil reflectivity (i.e., the ratio of the intensity of the actual pupil image to the image intensity that would have resulted if a perfect white diffusing screen had been substituted for the eye).

b) the contrast between the bright pupil and the (relatively) dark iris.

c) the absolute intensity of the pupil image.

d) the signal/noise ratio in tracking the pupil/iris boundary with a given photosensitive surface (this can be derived from the absolute pupil signal (Item c) and the pupil/iris contrast ratio (Item b).

A detailed photographic measurement program was performed to determine these parameters under a wide range of conditions. A typical experimental arrangement is shown in Figure 19. The results are summarized in Figure 20 which shows the operating contours of the Oculometer as a function of

- system F/number
- pupil diameter
- state of accommodation
- pupil reflectivity variations over the population

Accommodation sensing.--One result of this pupil intensity investigation was the specification of a means of measuring accommodation with the Oculometer. With slight modification, the optical system can produce a gradient in the pupil intensity (across a pupil diameter) the magnitude and sign of which is proportional to the state of accommodation of the subject relative to the distance of the Oculometer from the subject. A microdensitometer trace of a pupil image showing such a gradient is shown in Figure 21.

Xenon short arc study.--In order to provide maximum ambient light discrimination, a xenon short arc lamp was selected for the illuminator in the new remote design.

An experimental investigation was made of two short arc lamps (the Varian 150 watt and PEK 35 watt units), to determine

- spectral characteristics
- arc radiance
- arc stability
- ray divergency
- lifetime

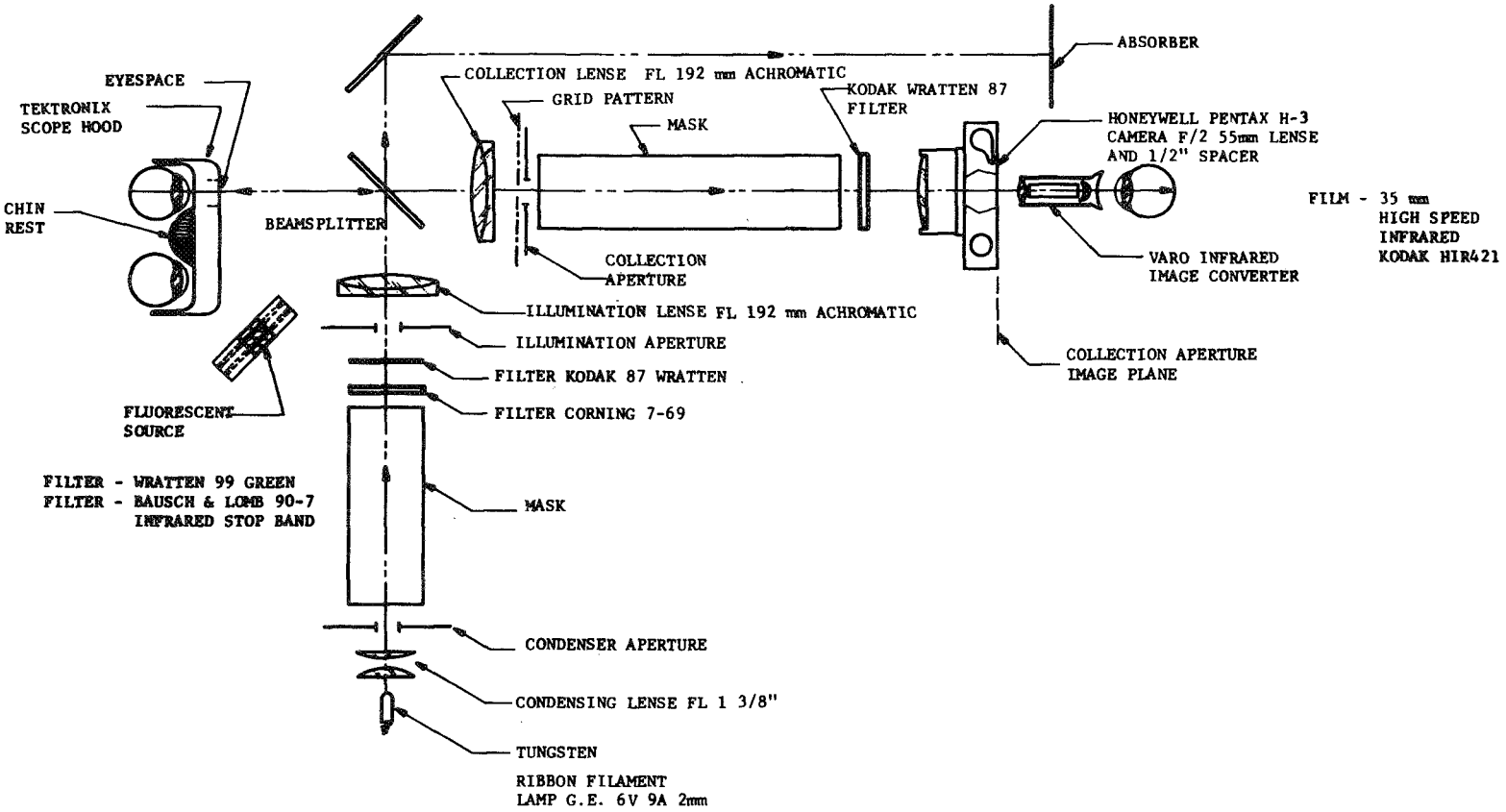

Figure 19.--Experimental Arrangement For Pupil Reflectivity Tests

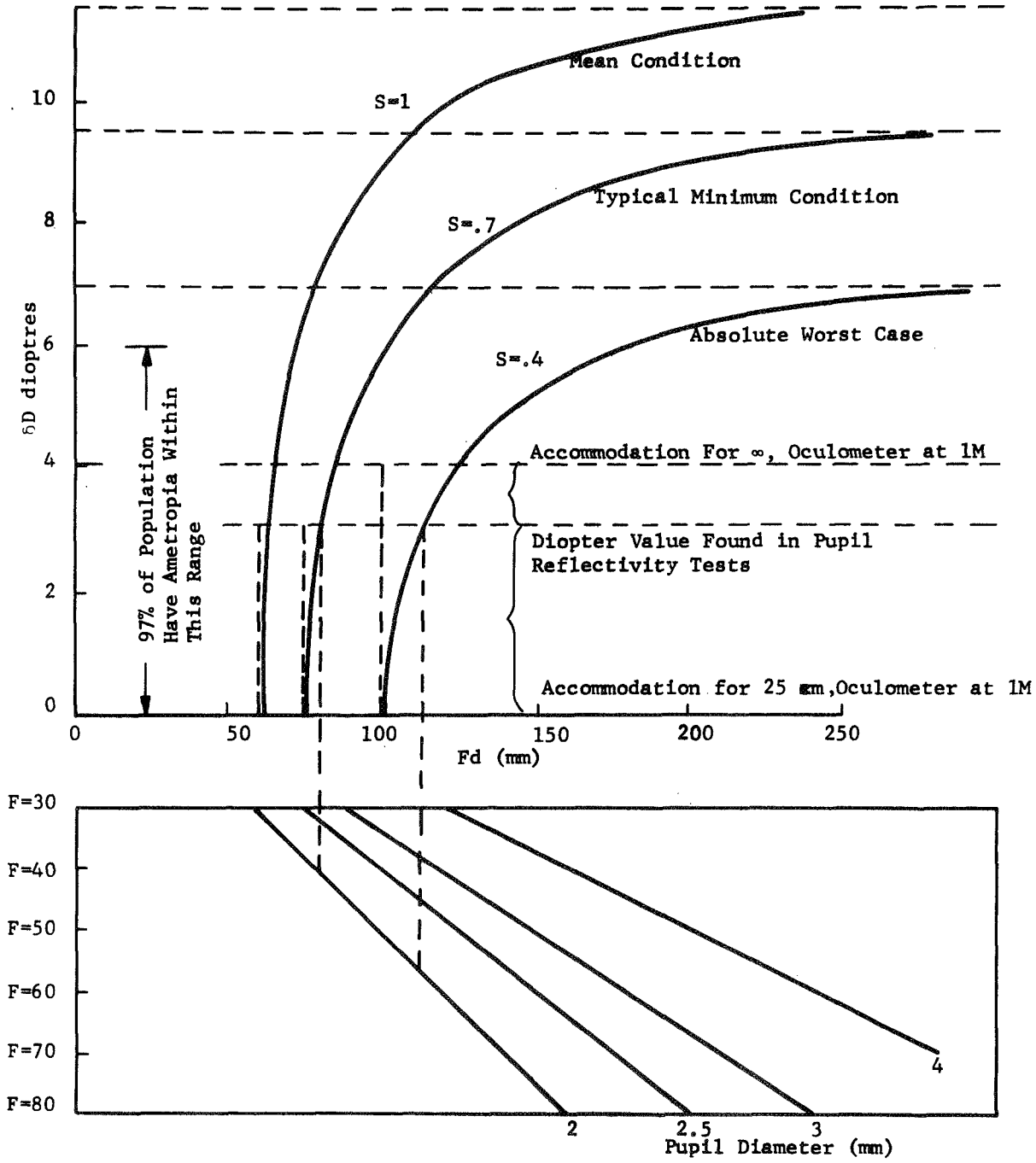

Figure 20.--Operating Contours

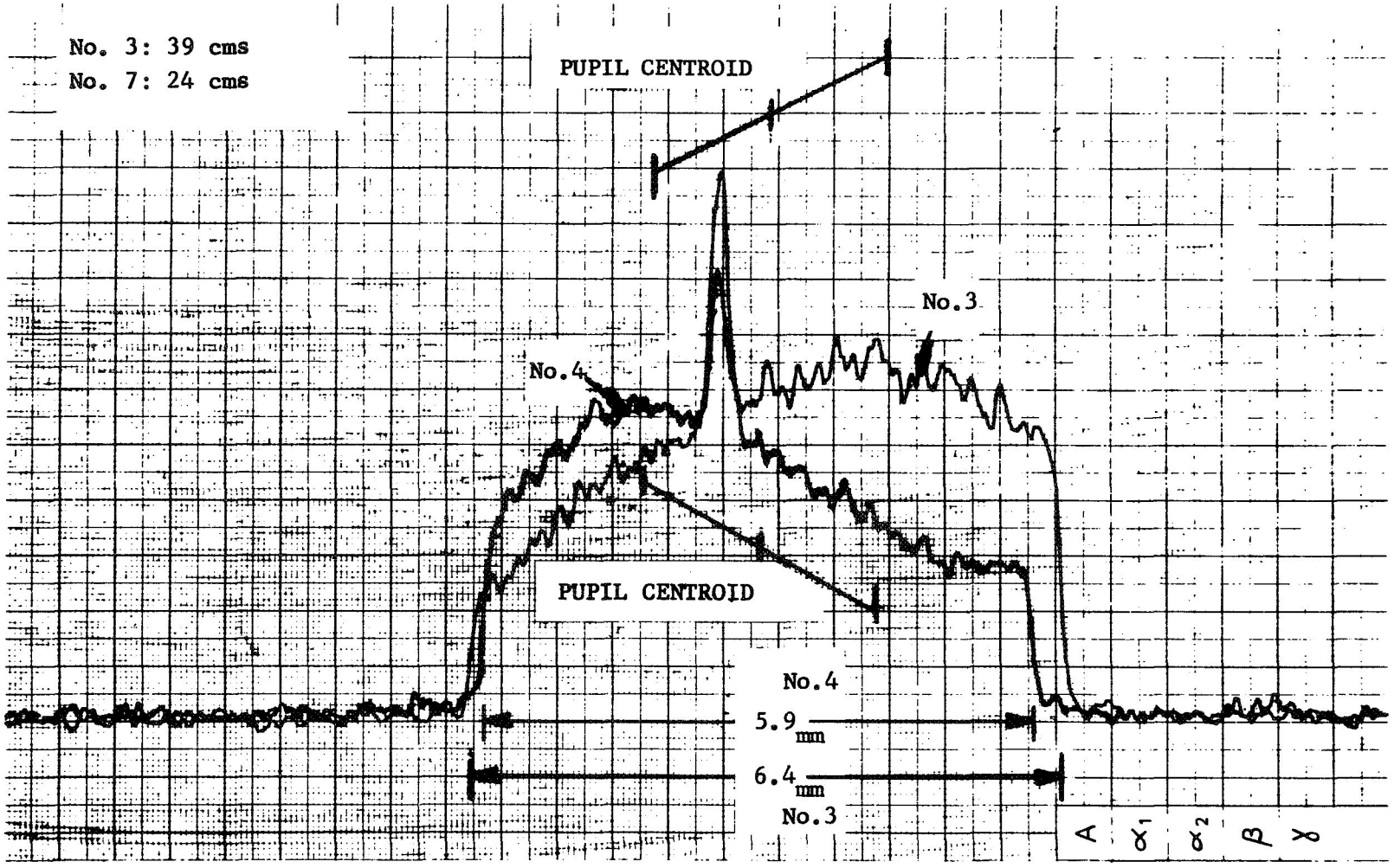

Figure 21.--Microdensitometer Traces Of Pupil Gradient

The distribution of rays found from the Varian lamp is shown in Figure 22. A screen placed at the image plane (3 5/8 inches from the sapphire window of the lamp) shows a central hot spot in the image. As the screen is moved away from the lamp, the light distribution on the screen corresponds to the ray pattern as shown in Figure 22.

If the central, collimated rays coming from the arc image are collected and the peripheral, divergent rays obscured by means of 1.5-inch diameter aperture placed 26 inches from the lamp, the arc image (due to the collimated rays only) can be investigated. The particular arc image due to the collimated rays can be recreated by placing a lens at the aperture (26-inches from the lamp). This experiment shows that the arc image due to the collimated rays has a central cold spot with side arms, which are an image of the electrode supporting arms. In contrast, the arc image due to all rays has a central hot spot. The spectral characteristics and the arc radiance of the Varian short arc lamp are shown in Figures 23 and 24.

APPENDIX A

BASIC OCULOMETER SENSING PRINCIPLE

The basic sensing principle of the Oculometer is that eye direction is defined by the position of a corneal reflection (of the radiation source within the Oculometer), relative to the center of the pupil.

More specifically, imagine that the eye is illuminated by a point source at infinity and is imaged onto a screen by an optical system whose point collection aperture is also at infinity, coincident with that of the illumination source. Some of the collimated radiation incident at the eye (Figure A.1) is reflected at the corneal air surface (the reflection factor is about 2.5%). The rays reflected from the cornea appear to diverge from a point within the eye which is the virtual image of the source. The corneal reflection of a finite bundle of collimated rays is actually an extended surface, not a point. However, this will not affect the basic result because, in the present case, only the rays from an infinitely small incident bundle are reflected back to the collection aperture. The actual ray reflected back from the cornea to the infinitely small collection aperture, at infinity and coincident

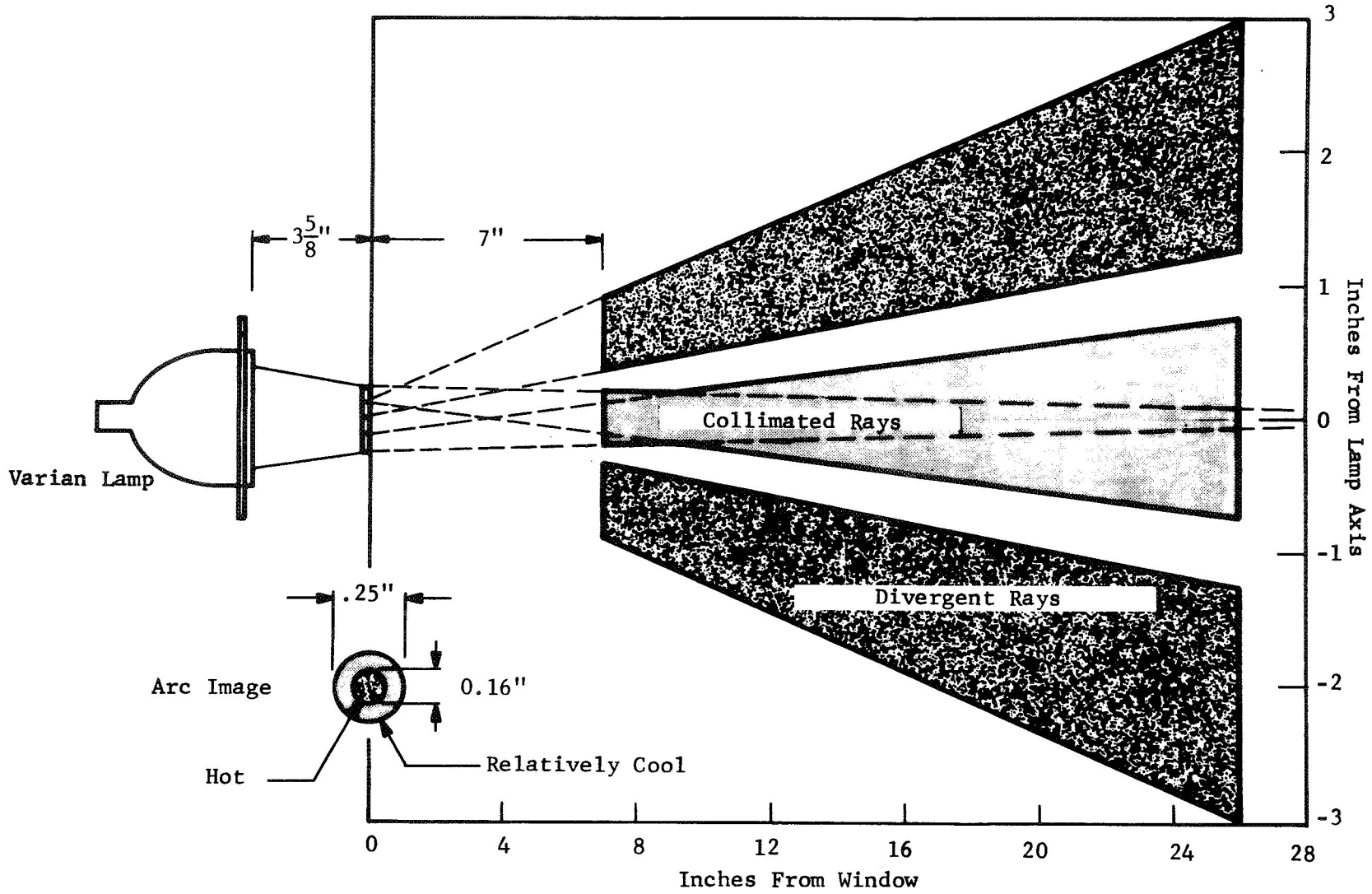

Figure 22.--Xenon Short Arc Ray Distribution

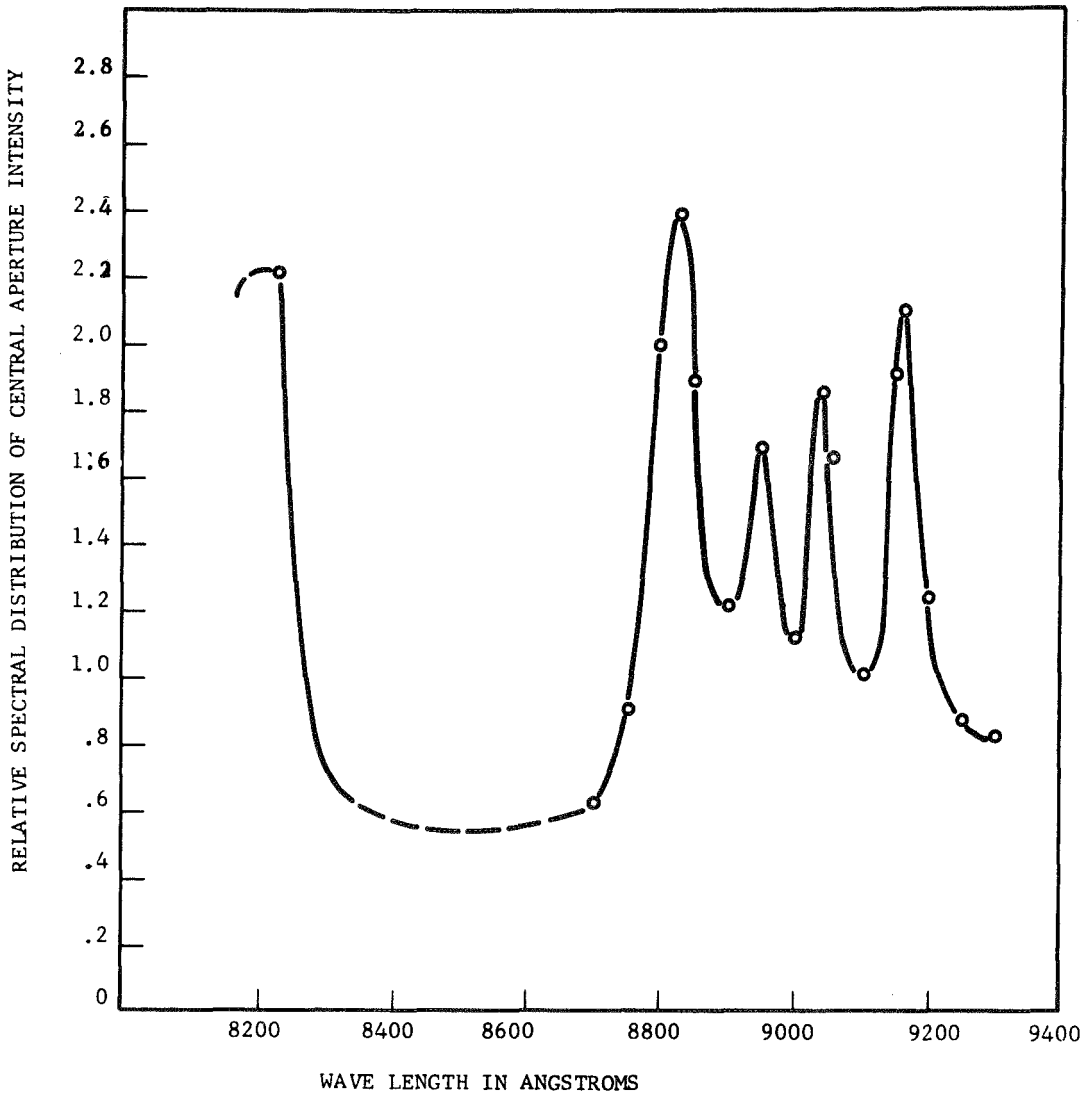

Figure 23.--Relative Spectral Distribution

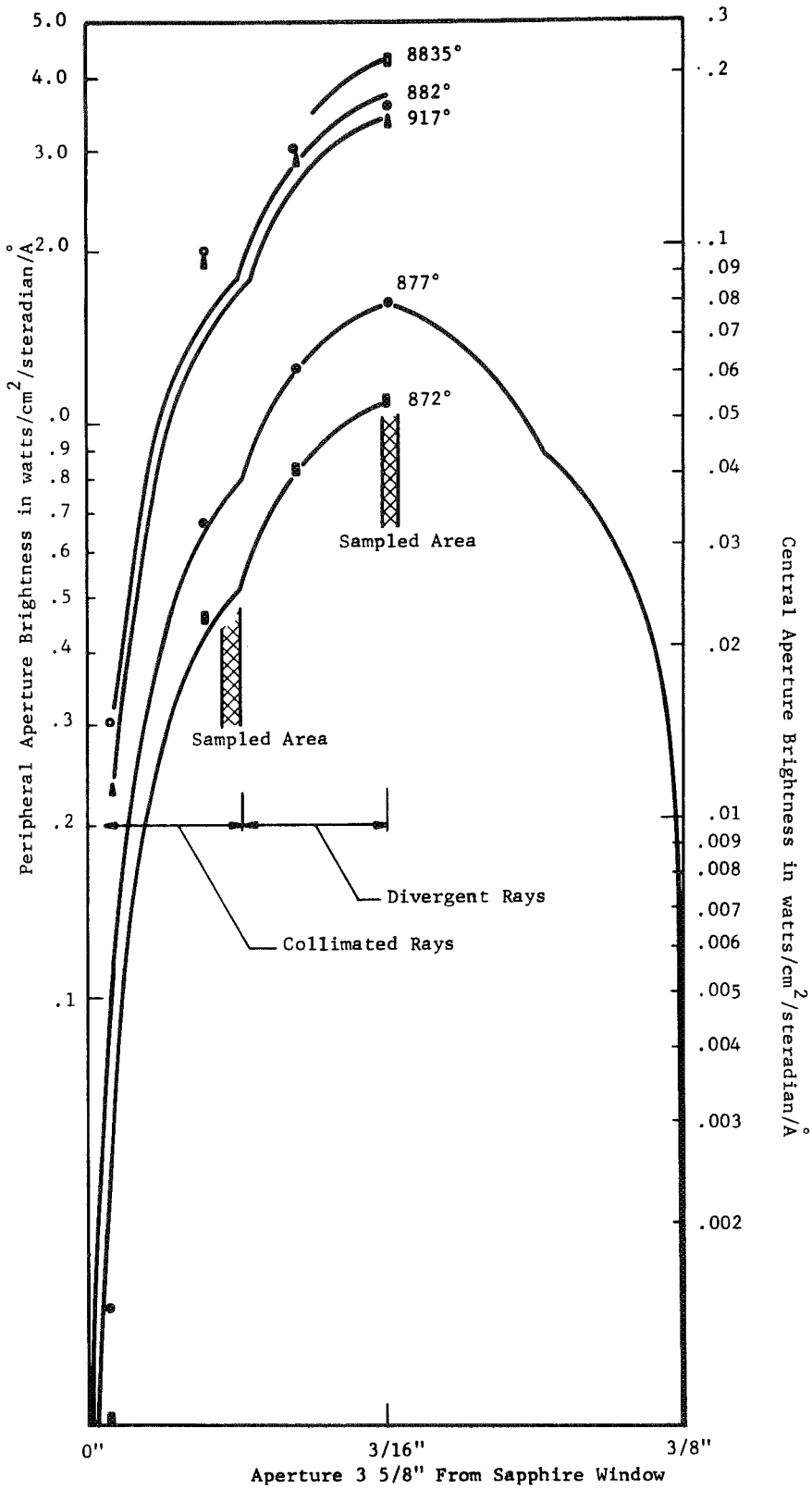

Figure 24.--Radiance Of Varian Xenon Arc At Specified Wavelength

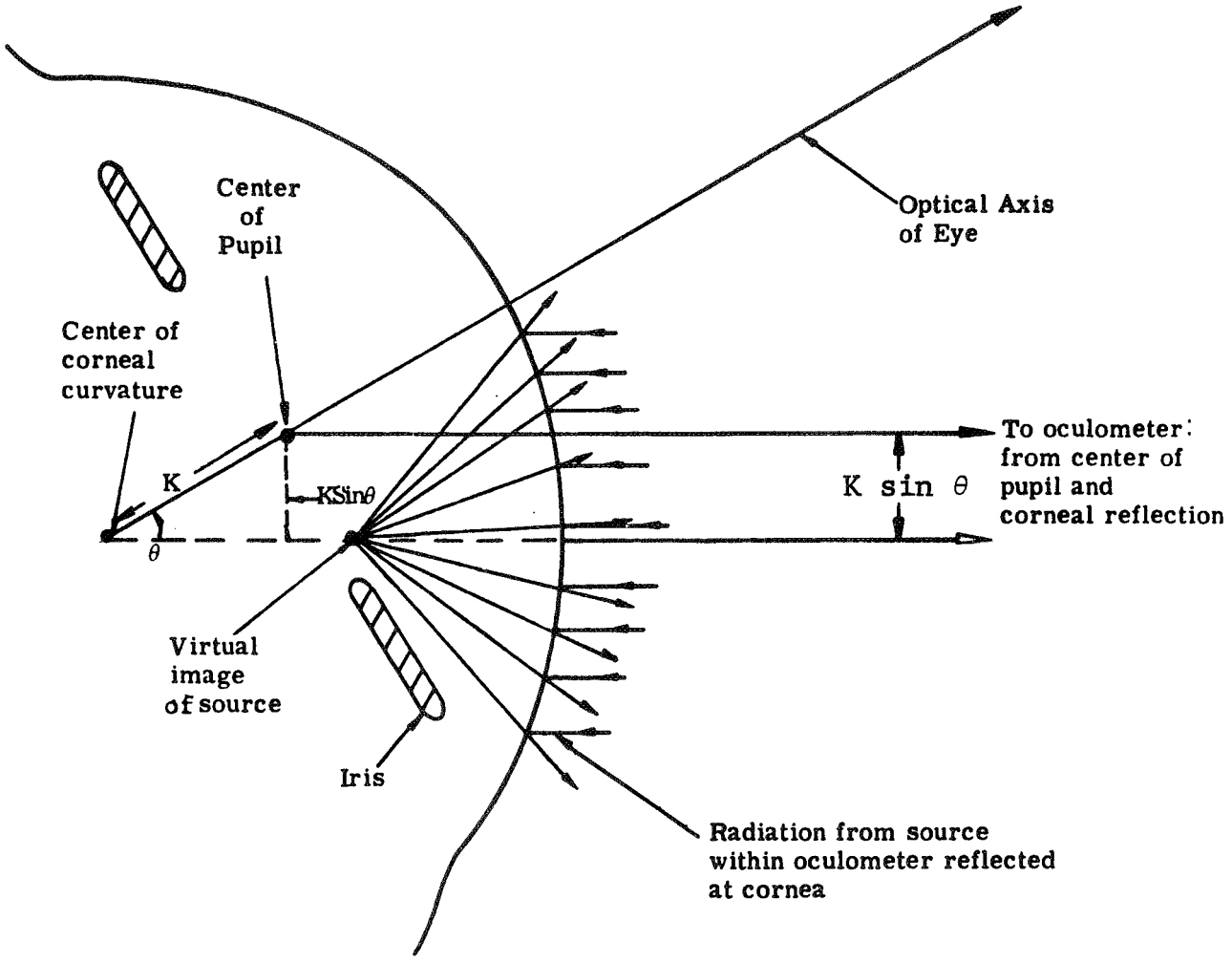

Displacement of corneal reflection from center of pupil, K Sin θ, is proportional to the angular direction, θ, of the eye, and is independent of the position of the eye.

Figure 25.--Basic Sensing Principle

with the source, corresponds to that particular normal to the corneal surface which is parallel to the incident collimated rays.

The pupil-iris boundary is illuminated in the Oculometer in such a way as to make this boundary clearly visible. By tracking this boundary, the center of the pupil can be determined. It can be assumed for the present purpose, therefore, that there is a luminous point at the center of the pupil. Because the aperture of the collection optics is assumed, for the moment, to be infinitely small and located at infinity, the only ray from this (imaginary) point at the center of the pupil, that will be collected, is the ray parallel to the incident collimated bundle. The displacement of the corneal reflection from the center of the pupil is, therefore, (from Figure A.1) $K \sin \theta$ where θ is the angle between the geometric axis of the eye and the direction of the incident collimated beam (which is a reference direction, the optical axis of the Oculometer) and K is a dimensional constant of the eye. Thus by measuring the displacement of the corneal reflection from the center of the pupil, in the eye image, a measure is obtained of the direction of the geometric axis of the eye.

Under the conditions stated, the displacement between the rays from the center of the pupil and from the corneal reflection is independent of the position of the eye in all three dimensions. That is, if the eye moves (with no rotation) in any direction, the displacement between the two rays is invariant. The displacement between the rays is solely a function of the angular direction of the eye.