General Disclaimer

One or more of the Following Statements may affect this Document

- This document has been reproduced from the best copy furnished by the organizational source. It is being released in the interest of making available as much information as possible.

- This document may contain data, which exceeds the sheet parameters. It was furnished in this condition by the organizational source and is the best copy available.

- This document may contain tone-on-tone or color graphs, charts and/or pictures, which have been reproduced in black and white.

- This document is paginated as submitted by the original source.

- Portions of this document are not fully legible due to the historical nature of some of the material. However, it is the best reproduction available from the original submission.

Produced by the NASA Center for Aerospace Information (CASI)

X-525-69-389
PREPRINT

NASA TM X-63943

DIAGNOSTIC PROCEDURES FOR ANTENNA HYDRAULIC DRIVE SYSTEMS

G. C. WINSTON
R. B. TATGE
J. J. LOMBARDO

JUL 1970
RECEIVED
NASA STI FACILITY
INPUT BRANCH

SEPTEMBER 1969

GSFC — GODDARD SPACE FLIGHT CENTER
GREENBELT, MARYLAND

N70-30824

(ACCESSION NUMBER)	(THRU)
37	1
(PAGES)	(CODE)
TMX 63943	C3
(NASA CR OR TMX OR AD NUMBER)	(CATEGORY)

FACILITY FORM 602

X-525-69-389

DIAGNOSTIC PROCEDURES FOR ANTENNA HYDRAULIC DRIVE SYSTEMS

G. C. Winston

R. B. Tatge*

J. J. Lombardo

September 1969

*Mechanical Engineering Laboratory, Research and Development Center, General Electric Company, Schenectady, New York

GODDARD SPACE FLIGHT CENTER
Greenbelt, Maryland

PRECEDING PAGE BLANK NOT FILMED.

DIAGNOSTIC PROCEDURES FOR ANTENNA HYDRAULIC DRIVE SYSTEMS

ABSTRACT

Maintenance of a high level of reliability of the hydraulic drive subsystems of large steerable antennas requires an agressively pursued, continuing program of monitoring, testing and maintenance. The use of commonly supplied instrumentation such as temperature and pressure gauges and of physical inspections while important and necessary are insufficient for reliability levels required for space exploration. A diligently conducted program of periodic fluid sampling and analysis greatly improves overall system reliability but has serious limitations which prevent attainment of the reliability required. A study of more powerful methods involving the analysis of vibration signatures has shown the feasibility of detecting developing malfunctions in their incipient stage. This would permit corrective action to be taken during non-critical periods and hopefully circumvent the great majority of failures. Work in this area has reached the point of beginning a thorough field evaluation and extension of the technique to the full subsystem.

PRECEDING PAGE BLANK NOT FILMED.

CONTENTS

	Page
ABSTRACT	iii
INTRODUCTION	3
DRIVE SUBSYSTEM DESCRIPTION	6
FACTORS EFFECTING RELIABILITY	9
HYDRAULIC FLUID ANALYSIS	9
Fluid Sampling	9
Fluid Analysis	10
Limitations of Fluid Analysis	12
MECHANICAL SIGNATURE ANALYSIS	14
Goals of Signature Analysis	14
Application of the Technique	15
Application to the Hydraulic System	19
Experimental Program	20
Test Results	20
Field Evaluation	25
Further Development	30
CONCLUSIONS	33

ILLUSTRATIONS

Figure		Page
1	Apollo 85-foot Antenna	2
2	Hydraulic Power Package	4
3	Hydraulic Circuit Schematic	5
4	Large Contaminant Particles	13
5	Transient Averaging	18
6	Piston Pump Waveforms - Normal Operation	21
7	Piston Pump Waveforms - With Cavitation	23
8	Galled Vane Pump Ring	24
9	Vane Pump Summed Waveforms	26
10	Servo Valve Waveforms - Valve Opening	27
11	Data Acquisition System	29
12	Data Reduction System	31

DIAGNOSTIC PROCEDURES FOR ANTENNA HYDRAULIC DRIVE SYSTEMS

INTRODUCTION

The success of most spacecraft projects, whether manned or unmanned, is highly dependent upon reliable support by ground based antenna systems. The antenna pictured in Figure 1 is typical of systems in use throughout the worldwide spacecraft tracking networks of the National Aeronautics and Space Administration (NASA). It is used for spacecraft tracking, commanding and telemetry data acquisition. This antenna employs an 85-foot diameter parabolic reflector to collect radio frequency energy. The parabola is rotated about two orthogonal axes by hydraulic drive subsystems which form a part of the antenna's servo control system. NASA antennas of this general type range in size from 30-foot diameter to 210-foot diameter parabolas. A total of 30 such antennas are in use. All of these employ hydraulic drives. In addition, there are numerous smaller hydraulically driven array type antennas in use.

NASA tracking stations are grouped by mission into three networks. These are the Space Tracking and Data Acquisition Network (STADAN) supporting scientific spacecraft programs and operated by the Goddard Space Flight Center (GSFC), the Manned Space Flight Network (MSFN) supporting the Apollo program and also operated by GSFC, and the Deep Space Network (DSN) supporting deep space probe programs and operated for NASA by the Jet Propulsion Laboratory. The work described here is being conducted in connection with the MSFN. With minor modifications the results are applicable to all hydraulically driven antennas, however.

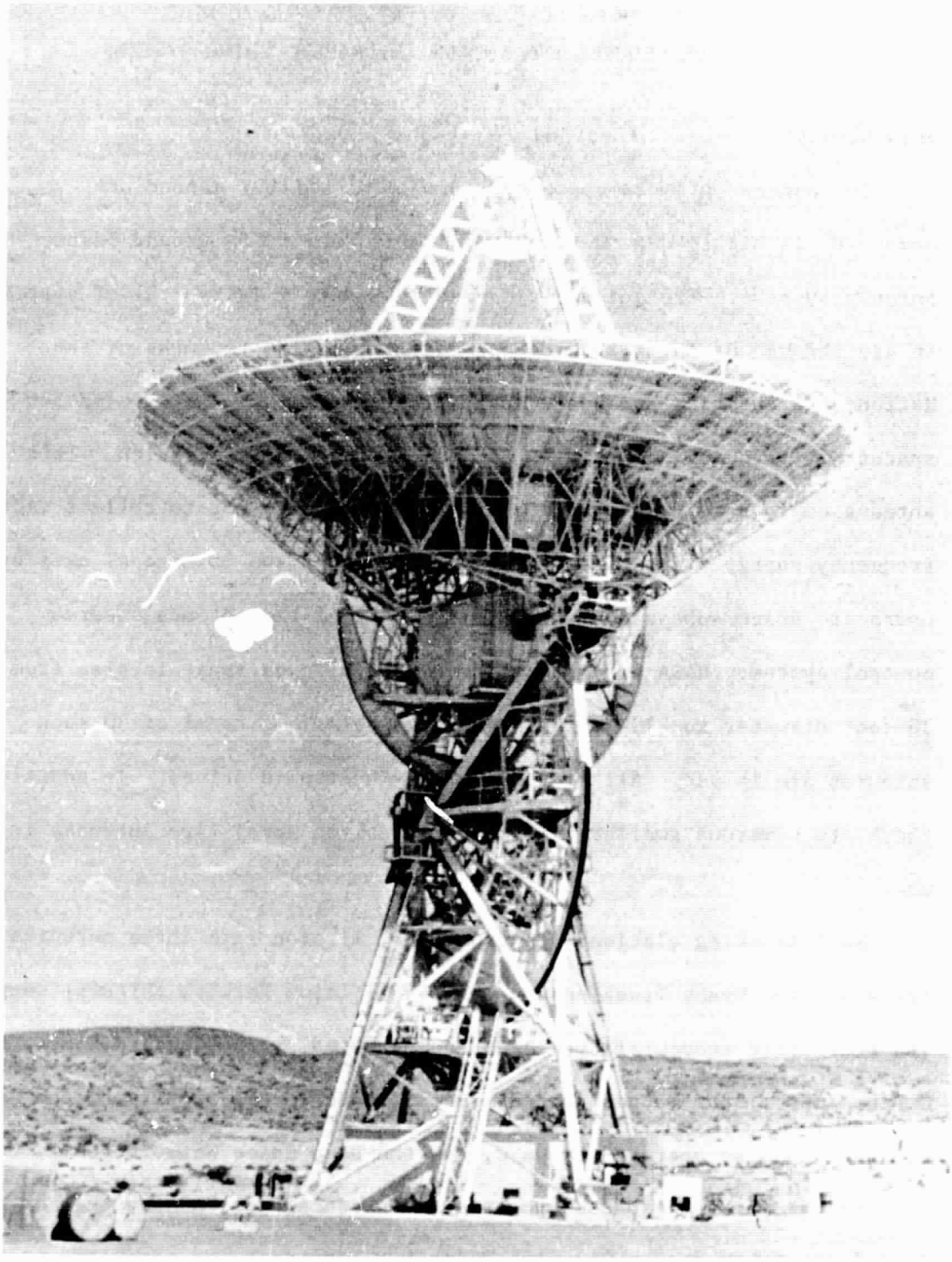

Figure 1. Apollo 85-foot Antenna

Maintenance of a high reliability in an overall space project requires, of course, a much higher reliability of the individual subsystems which must operate together. This imposes a particularly severe requirement on the antenna drive which is one of the few complex subsystems in which little redundancy is feasible. If sufficient drive reliability cannot be maintained the alternative is the expensive one of providing completely redundant antenna systems. The effective reliability of the drive can be increased substantially if developing failure conditions can be detected in time that corrections are made during scheduled maintenance periods and before operational use is affected. Development work on such detection means for hydraulic drive subsystems using both conventional (fluid sampling) and advanced (vibration signature analysis) techniques is described here.

DRIVE SUBSYSTEM DESCRIPTION

Individual hydraulic power packages, mounted on the antenna, are used for the two axes. One of these packages is shown in Figure 2. Flexibl hose connections are made to fixed displacement hydraulic motors which operate through gear boxes and bull gears to drive the antenna. Connections are also made to the hydraulically operated braking system. Figure 3 is a simplified schematic of the hydraulic circuit. An electric motor rotates a variable displacement servo pump (PV) which supplies high pressure fluid at controlled flow rates to the hydraulic motors (MF1 and MF2). The pump's displacement and therefore the flow rate is controlled by a closed servo loop. An electronic servo amplifier (not shown) supplies

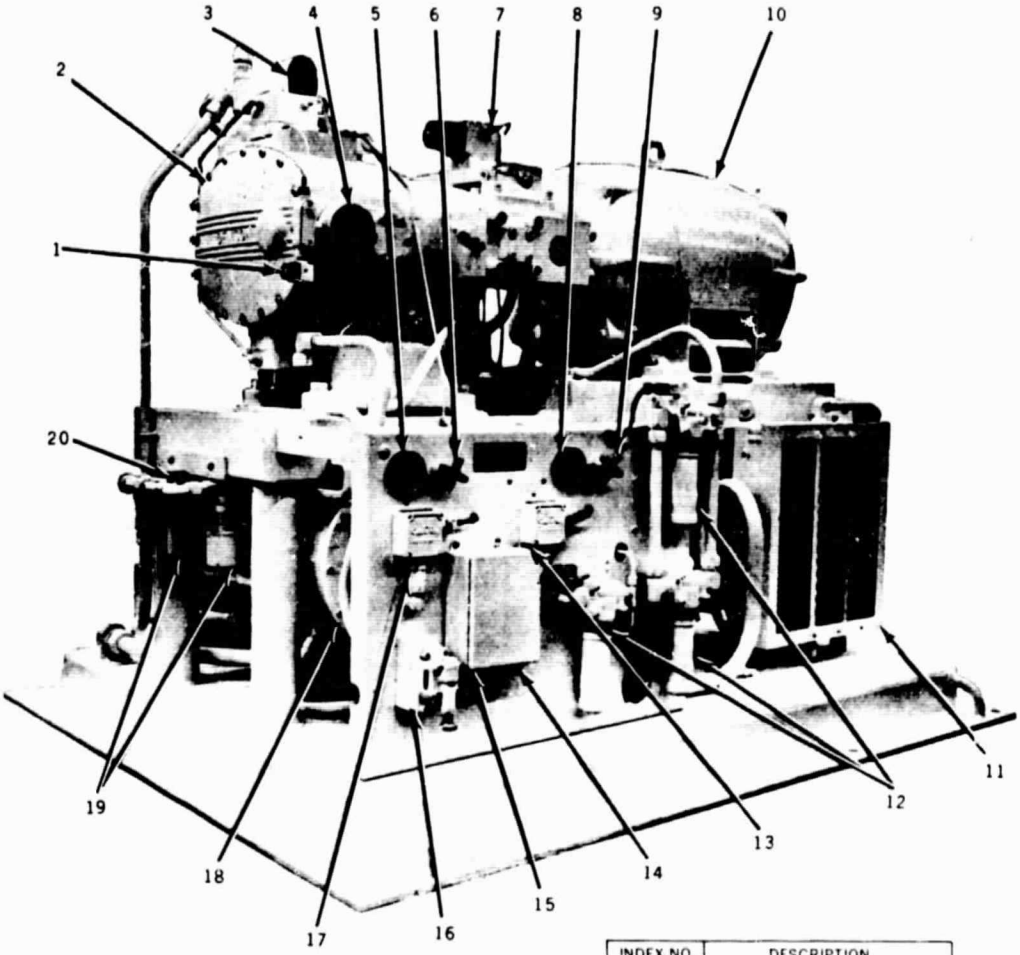

INDEX NO.	DESCRIPTION
1	JACK
2	SERVO PUMP
3	SERVO VALVE
4	YOKE POT. AND POSITION IND.
5	PRESSURE GAUGE
6	NEEDLE VALVE
7	SOLENOID VALVE
8	PRESSURE GAUGE
9	NEEDLE VALVE
10	AC PRIME MOVER
11	HEAT EXCHANGER
12	FLUID PRESSURE FILTERS
13	PRESSURE SWITCH
14	JACK
15	JUNCTION BOX
16	RELIEF VALVE
17	PRESSURE SWITCH
18	HYDRAULIC RESERVOIR
19	LOW PRESSURE FILTERS
20	FILTER CONDITION IND.

Figure 2. Hydraulic Power Package

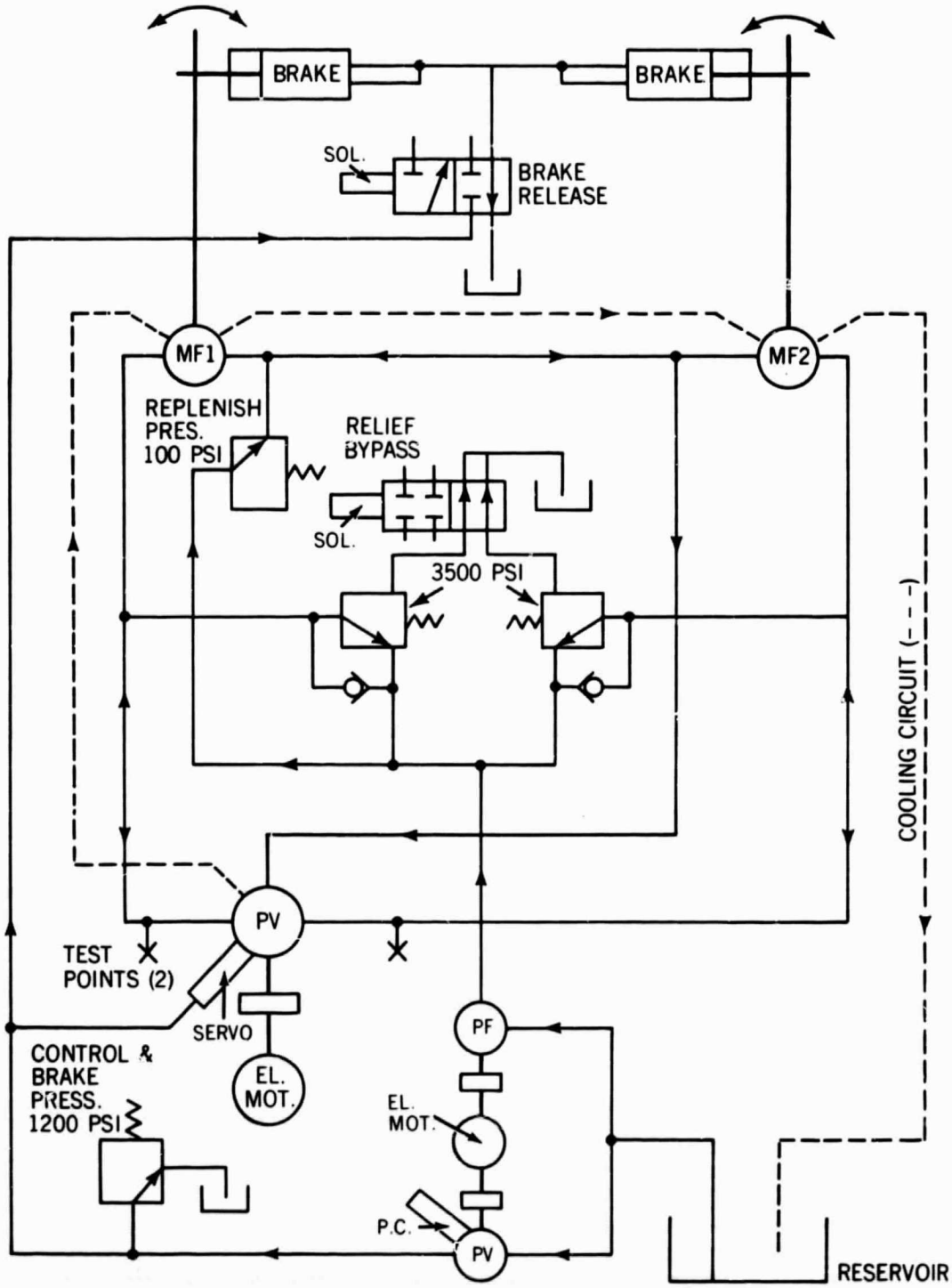

Figure 3. Hydraulic Circuit Schematic

current to a servo valve which controls fluid flow to a pair of actuators located in the pump case. The position of these actuators determines the pump stroke through a yoke mechanism and hence the output flow rate. The yoke's position is measured by a potentiometer which provides a feedback signal to the servo amplifier.

Two hydraulic motors are used per axis. They are series connected in the pump's output circuit such that for a given direction of output flow one motor is driving the antenna while the other is being driven by the bull gear and is pumping against a small pressure head. When the pump's output flow reverses direction the motors exchange roles and the antenna is driven in the opposite direction. This scheme maintains the gear face contacts and effectively eliminates gearing backlash. A vane-type pump (PF) supplies the replenishing circuit which provides fluid to the motor circuit to make up for leakage. It also maintains small opposing torques in the motors to provide anti-backlash action when the antenna is not being driven. The pressure compensated variable displacement pump (PC - PV) supplies the variable displacement pump control circuit described earlier and the brake circuit. In addition to the components shown in Figure 3, the complete drive contains a number of solenoid operated and pressure relief valves, filters and other minor items, some of which are shown in Figure 2.

FACTORS EFFECTING RELIABILITY

The drive subsystem design emphasizes reliability throught the selection and derating of components, by extensive use of filters and in provisions for monitoring and testing. Fluid pressure level and temperature are

monitored continuously and abnormal conditions indicated at the operator's console. In addition, extreme conditions automatically cause shut-down. Fluid samples may be taken at a number of points for analysis.

There are, however, a number of factors which tend to reduce reliability. The drive subsystem is characterized by relatively massive external construction and numerous delicate internal parts and close tolerances. The clearance between the pistons and cylinder walls of the servo pump is on the order of 0.0002 inch while the servo valve spool clearance is 25×10^{-6} inch, for example. There are many areas of high unit stress. Operating pressure and flow rates are high -- up to 3000 psi and 60 gallons per minute, respectively. Reservoir fluid temperature is normally maintained in the range 100°F to 120°F by heaters and heat exchangers but local temperatures in the working areas of pumps and motors may exceed this range considerable. Perhaps the most detrimental aspects of the drive subsystem applications are the environment and operating conditions. The antenna installations extend from desert regions to the sub-arctic. The drive subsystem is fully exposed to the weather. The application inherently requires frequent high torque reversals and stop-and-go operation. Cold starts after shut-down periods of several hours are common. Finally there are the contingencies of field operations, usually in remote locations.

Malfunctions can develop from many causes most of which can be classified as follows:

1. Wear resulting from prolonged operation at high velocity and

load. Bearings, gears and sliding parts such as pump pistons and servo valve spools are likely areas of wear.

2. Metal erosion from high fluid velocity and pressure gradients. Erosion is greatly accelerated by the presence of small particle contaminants (below 5 microns diameter) in the fluid. Serious erosion usually begins at the edges of valve ports and nozzle tips.

3. Cavitation due to vaporization of the hydraulic fluid. Cavitation increases erosion and can contribute to failures resulting from high shock levels.

4. Galling and scoring caused by large contaminate particles.

5. Metal-to-metal contact due to a lubrication breakdown. Hydraulic components are largely self-lubricating using the hydraulic fluid as the lubricant. Areas requiring lubrication which are not in the main stream of fluid flow are provided with passages admitting a small amount of fluid. Blockage of these passages by contaminates results in a loss of lubricant.

6. Fatigue resulting from high stress and vibration levels.

Sudden, catastrophic failures of components may occur; however, most failures are preceded by symptoms which develop over a period of time. In addition, many subsystem failures are the result of a gradual deterioration in a component which finally reaches a point at which subsystem performance quickly declines. In many cases the antenna's servo control system tends to compensate for the performance degradation in the

drive and thus masks it from external view until a fairly sharp threshold is reached at which this compensation is no longer possible.

Development of reliable means of detecting and evaluating early symptoms of drive subsystem degradation is needed. To fully meet this need, sufficiently early detection must be provided to permit corrections to be made during non-critical, scheduled maintenance periods including time for air-delivery of depot parts to any station. Identification of the developing condition must permit delivery of the proper parts and planning of the repair effort before the system is taken out of service. The detection process must be highly reliable. It is desirable that failures of this process be on the false-alarm side; however, the number of these must be minimal to maintain confidence in the process and to avoid unnecessary tear-downs. It is well known that disassembling equipment such as this unnecessarily can contribute to future malfunctions.

HYDRAULIC FLUID ANALYSIS

Fluid Sampling

Rigorous procedures for taking fluid samples in the MSFN were developed concurrently with the installation and initial operation of the antenna systems. This network consists of three 85-foot diameter and twelve 30-foot diameter antennas. Beginning with the first Apollo antenna installation, fluid samples were returned to GSFC for analysis. This assured the use of a uniform analysis technique for all antennas and problems inherent to the subsystem design could be detected more quickly by centralized analysis.

Two methods are available for obtaining fluid samples. The first is from bleed points at the output of the servo pump. This provides a sample of the fluid as it circulates through the system. The condition of this fluid is a function of its original condition, the internal generation of contaminates and the effectiveness of the filters. The second method of fluid sampling consists simply of draining off the sediment contents of the filter cases. This provides a more concentrated sample of contaminants accumulated over a period of time.

Fluid Analysis

Goals of the fluid analysis were to determine the cleanliness of the fluid and to detect developing malfunctions by identifying and relating contaminants found in the fluid. The first goal required that a maximum acceptable particle count be established. Particle counts were performed on a large number of samples taken from the twelve 30-foot systems over a period of several months. Particles were classified in size ranges of 5 to 15 microns, 15 to 25 microns and over 25 microns. The average counts in these ranges were computed. The resulting figures as given in Table I were then established as the maximum acceptable particle counts.

SIZE RANGE (microns)		
(5-15)	(15 - 25)	(> 25)
14,000	1,800	1,300

TABLE I

Maximum Acceptable Contaminant Particle Counts for MSFN 30-Foot Antenna Drives

Table I corresponds approximately to a class 3 system according to the present SAE-ASTM-AIA standards for hydraulic fluids as given in Table II.

CONTAMINATION LEVELS SAE, ASTM, AND AIA

TENTATIVE STANDARD FOR HYDRAULIC FLUIDS

Size Range (microns)	Contamination Class						
	0	1	2	3	4	5	6
5- 10	2700	4600	9700	24000	32000	87000	128000
10- 25	670	1340	2680	5360	10700	21400	42000
25- 50	93	210	380	780	1510	3130	6500
50-100	16	28	56	110	225	430	1000
> 100	1	3	5	11	21	41	92
Total Number of Particles Larger Than 5 Microns	3480	6181	12821	30261	44456	112001	177592

TABLE II

The established particle counts have proved to be maintainable with care and to contribute to a low rate of failures in the drive subsystem.

Fluid filters are located at a number of critical points. Identification of the sediment bowl samples with a particular filter helps to isolate the source of contaminants to a certain part of the system. Larger particles indicative of an immediately serious condition are usually trapped by the filters and hence do not appear in the bleed samples. They are present in the sediment samples, however. Identification of the material of these particles and a knowledge of the materials used in the various subsystem components further isolates the source of contaminants. Emission

spectroscope and X-ray diffraction analyses have been used in difficult cases in which the contaminant material could not be identified by visual inspection. A few large contaminant specimens are shown in Figure 4. The grid size in this Figure is 3000 microns on a side.

The sampling and analysis procedures just described are normally performed at intervals of one hundred operating hours. This interval may be decreased to as few as four hours when unusual conditions appear. The fluid analysis function was transferred to station personnel after procedures and standards were established and all subsystems were found to be operating at their expected level of reliability. This permits a more immediate evaluation of fluid conditions by field personnel. The value of a diligently pursued, periodic fluid analysis program is thoroughly demonstrated by numerous cases in which potential failure conditions were detected.

Limitations of Fluid Analysis

Fluid analysis and physical inspection have long been the standard methods of monitoring the condition of hydraulic systems. As applied to the antenna drive subsystems these methods have serious limitations, however. (1) The fluid analysis procedure is tedious and time consuming, requiring a great deal of skill and dedication on the part of the analyst. To be effective it must be performed under clean room conditions which are difficult to assure in the field. (2) By the time clear indications of trouble appear the condition has frequently progressed to a point at which a complete breakdown is near. (3) A significant level of contamination is required for detection to occur. In the meantime these contaminants

ZINC ALLOY SLIVER AND CARBON

ZINC ALLOY SLIVER

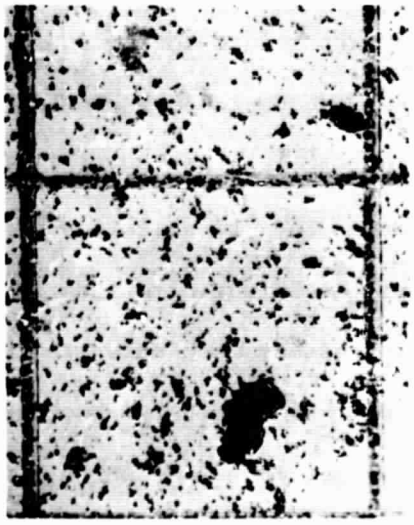

COPPER FLAKES

COPPER FLAKES AND ORGANIC FIBERS

Figure 4. Large Contaminant Particles Indicating Serious Component Damage

are causing erosion and abrasion of parts and clogging narrow passages contributing to additional problems. (4) Fluid analysis is sensitive to only those malfunctions which generate fluid contaminants. Portions of the mechanism not in contact with the fluid stream are not monitored. (5) Gross indications which are evident from a physical inspection usually indicate an advanced state of deterioration.

MECHANICAL SIGNATURE ANALYSIS

Goals of Signature Analysis

Experience from the fluid analysis program clearly indicated a need for better methods. Greater sensitivity is needed to permit detection of developing malfunctions in their very early stages. A wider range of conditions need to be monitored than is possible by present methods. The new methods must be easily applied. They must reduce the human factor in data collection and analysis. Data collection should be performed external to the drive subsystem and without reducing its inherent reliability. A search for methods satisfying these criteria led to selection of mechanical signature analysis for investigation. This technique offers data collection from externally mounted transducers with no effect upon subsystem operation. The fundemental mechanical events which occur in machinery, such as rolling, sliding, impacts, and flow all produce distinctive noises which can be interpreted to describe the internal condition. Noise changes are often a precursor of performance degradation in machines. Listening is an old diagnostic technique; in its simplest form it requires only a skilled and experienced mechanic. It is the goal of Mechanical Signature Analysis to automate the skilled mechanic while at the same time extending his ability

through the use of thorough engineering evaluation coupled with sensitive and selective instrumentation. The data analysis is adaptable to automatic data processing techniques either by special purpose equipment or by digital computers.

Application of the Technique

The problem in diagnostics is to develop a selective technique for extraction of discriminants which are highly correlated with the internal condition under study. The defect will usually be small, so the desired signal will probably be hidden by a high background level. The instrumentation technique must reliably sort out the discriminant from the welter of signals which may be present, many of them being perfectly normal and of no particular interest.

There are two approaches to effective discriminant extraction. The first is statistical: measure signals from a large sample of machines known to be good and with known defects, and describe their differences so that instruments can be built to recognize these changes. This approach is valid in some applications, but not in the monitoring of antenna hydraulic systems where a statistically significant sampling is not practical. A second approach, which was implemented, is based on an understanding of the processes by which vibration signals are generated and transmitted. Through the use of analytical models the characteristic signatures of both normal and abnormal conditions can be predicted. With this in hand, an analysis method is selected for discriminant extraction. This may then be tested and refined experimentally in the laboratory and in the field. The key elements are:

1. Understanding the mechanics of the machine, including its failure modes.

2. Understanding of the processes by which normal and abnormal signals are generated and propagated.

3. Selection and attachment of appropriate sensors.

4. Selection and test of a technique for extracting malfunction signatures from the raw data.

The instrumentation used for signature extraction should be no more complex than necessary. As a rule, the poorer the signal-to-noise ratio (signal being defined as a diagnostic discriminant and noise everything else), the more complex the instrumentation must be. Processing of signals is usually accomplished by waveform analysis, spectrum analysis, or a combination of both.

The waveform of the vibration of a machine may contain a great deal of diagnostic information. For example, the timing of events (as indicated by transient noises) relative to each other may be significant. Alternately, the presence or absence of particular noises indicative of mechanical events can be of diagnostic importance. In some cases these can be seen in a display of the raw waveform, while in others simple frequency-filtering before display may clean up the signal and make the discriminants more evident. In the most difficult situations these approaches are not adequate and more sophisticated signal processing is needed.

It is the character of most machinery noises that they are repetitive at some predictable rate, usually tied to shaft speed. Motors, pumps, and gears are good examples. Other components, such as rolling element bearings, produce noises which repeat at a rate related to shaft speed, but not synchronous with it. A powerful technique called transient averaging or signal summation can be used to extract repetitive signals from a noisy background, the only important practical restriction being that a trigger

signal synchronous with the disturbance must either be extracted or artificially generated. The principle is demonstrated in Figure 5. In effect, the signal is broken into segments, each having a period equal to that of the disturbance being studied. Successive segments are added to each other as shown. Each of the periods is divided into many discrete elements of time, and when addition is performed only those elements at the same instant (relative to the trigger previously described) are summed. Signal components which occur with the same frequency as the trigger (or a multiple of it) add directly as the number of summations. If the signal has non-synchronous components, either periodic or random, their sum grows as the square-root of the number of summations. As a result, the signal-to-noise ratio of the sum improves (relative to the raw signal) as $\sqrt{n}$, n being the number of summations. A variety of commercial instruments are available to perform this function; most take the form of small, wired-program digital computers. They act (in this application) as very narrow band comb filters in which those signal components synchronous with the trigger are passed while other signals are rejected. In effect the instrument re-combines them to establish the repetitive portions of the waveform.

A second approach to signature analysis is frequency filtering, or Fourier Analysis of the signal. This is a familiar and often-used technique, easily implemented with commercially available instruments. Any frequency analyzer has limitations, one of them being the rejection in the stop-band. If the components being measured are synchronous with a trigger, the transient averager may be used to effectively increase that rejection. The waveform

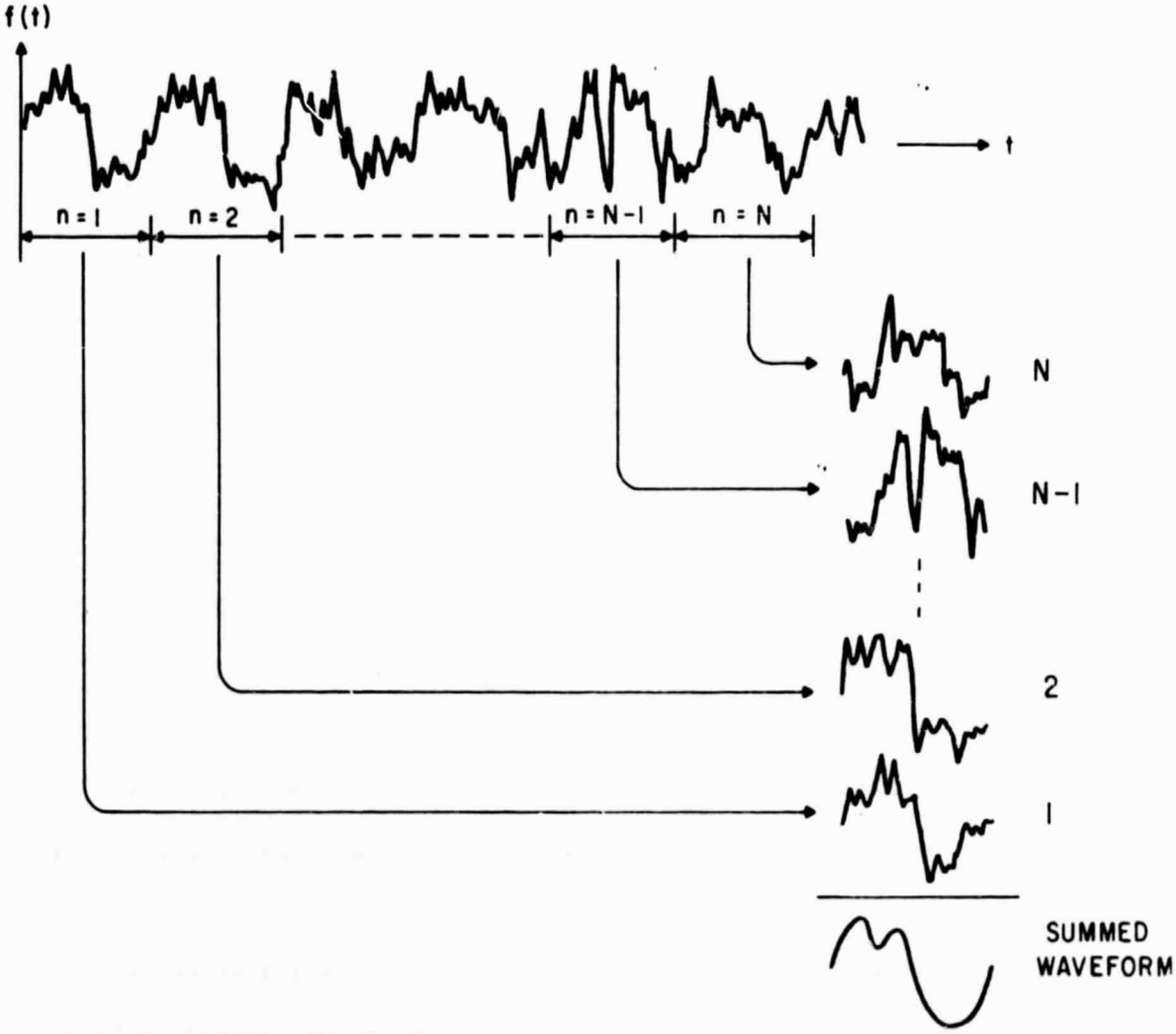

Figure 5. Transient Averaging

is first summed, then a Fourier Analysis is made of the summed signal. Summation throws away most of the interfering signals, making the analyzer's job much easier.

Application to the Hydraulic System

The 30-foot antenna drive subsystem was selected for study because of the large number of them in use and because one is conveniently located at GSFC. Five specific hydraulic components were studied in detail. These were chosen for their importance to the system and because they were typical of a wide range of similar devices. They were the variable displacement piston pump, the dual vane pump, a solenoid valve, the servo valve, and a pressure relief valve. A detailed analysis of each was made in order to understand its dynamics and the vibration signals it was expected to produce. In each case the analysis resulted in a computer simulation of the device.

In the case of the pumps the pressure fluctuations developed as the result of pulsating flow were the main subject of investigation. The flow from a pump is naturally unsteady as a result of geometrical considerations and leakages. The flow perturbations, acting against the load, result in pressure variations, the amplitude and character of which vary when malfunctions are present. The solenoid valve was analyzed by a balance-of-forces approach in order to predict its response. The servo valve was analyzed to determine its transient response by a technique analogous to that used by electrical engineers in studying amplifiers, a transform from frequency and phase response to amplitude vs. time. The pressure relief valve is a mechanical servo which was studied to determine its transient response and stability, as reflected by its output pressure fluctuations.

It will be noticed that pressure signals were the result of many of these analyses, while vibration was the parameter actually sensed for diagnostic purposes. These are of course related by a transfer function which is very complex. Rather than attempt to predict this with accuracy, recourse was made to experiment. The analysis was used to predict qualitatively the kinds of changes to be expected for various malfunctions, and the experimental program was devised to quantify them.

Experimental Program

The experimental program had two phases. The first phase included building a hydraulic loop using components of the hydraulic system normally used on the antenna. Tests were run on the loop to verify the analytical work and to refine the instrumentation which that analysis showed to be sensitive to the predicted diagnostic discriminants. Following that, the tests were repeated using components either intentionally damaged or which had been detected by fluid analysis as being damaged in the field. All of these components worked normally in the hydraulic sense, that is, there was no noticeable performance degradation even though there was a degree of mechanical damage. Finally, these components were removed from the test loop, mounted on the antenna at GSFC, and the tests were rerun to confirm that the techniques found applicable in the laboratory were still valid in the field environment.

Test Results

Figure 6a shows the raw waveform of the piston pump vibration along with a once per revolution trigger signal. The pump had seven pistons, and it can be seen that there is a component with that periodicity. Figure 6b

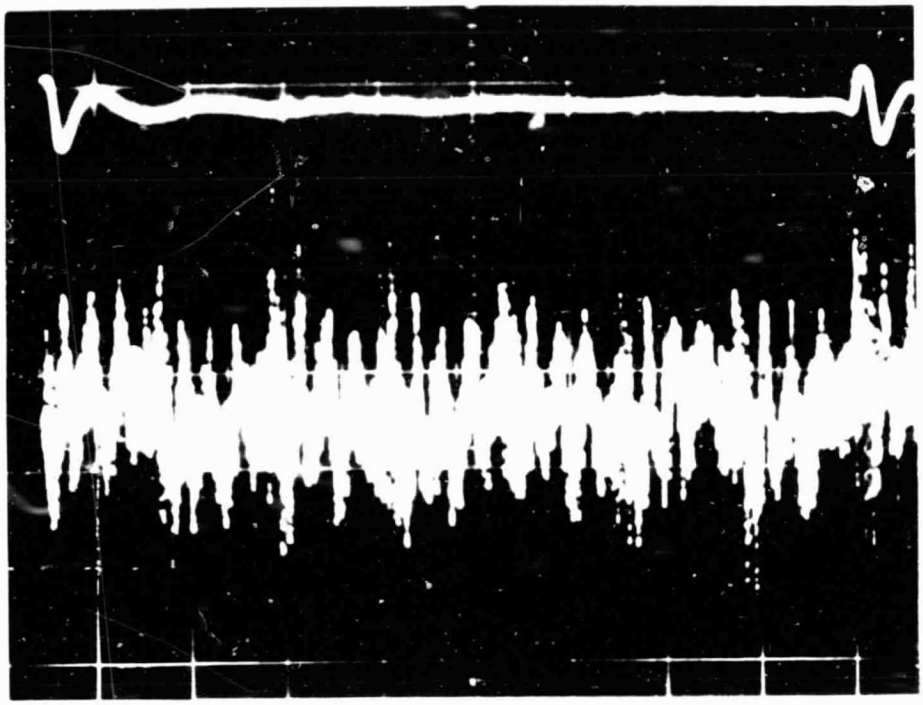

RAW WAVEFORM

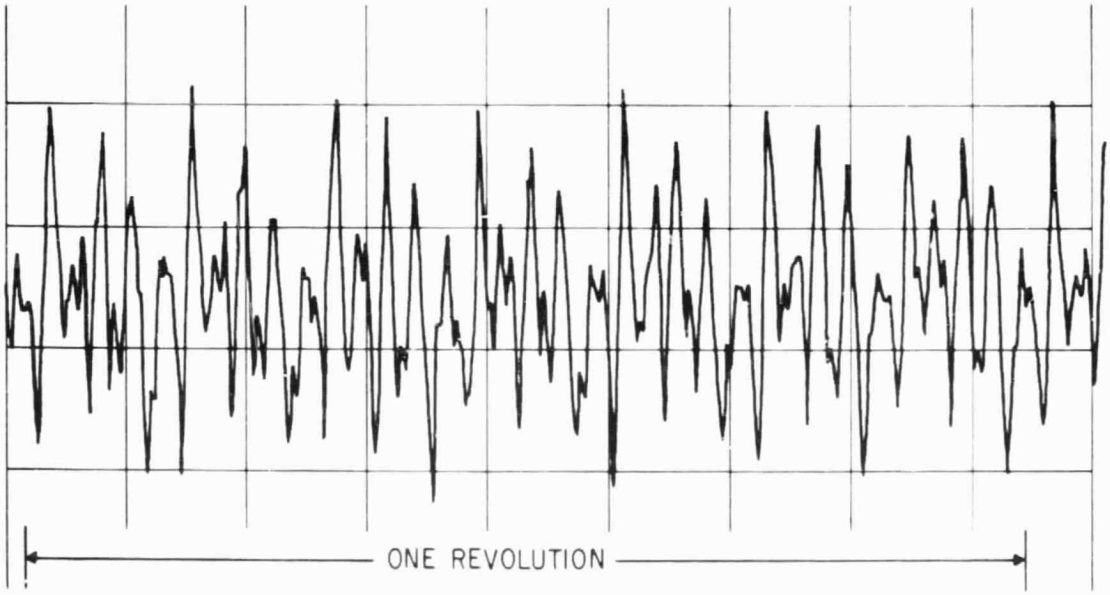

SUMMED WAVEFORM

Figure 6. Piston Pump Waveforms – Normal Operation

shows the same signal after 200 summations. The details of the signal, obscured in Figure 6a, are very clear. The seven-per-revolution component can be seen, as well as other, higher harmonics, particularly 35-per-revolution. The amplitudes of these components can be extracted by Fourier Analysis; the computer modeling shows that the relative amplitudes of these components is affected by wear and leakage, so that this gives valuable diagnostic information.

Figure 7a shows the raw waveform of the piston pump, measured in the laboratory, with the inlet throttled to intentionally induce cavitation. Note the seven periodic bursts of noise caused by the cavitation, not seen in Figure 6. Figure 7b shows data recorded on the actual antenna at its maximum tracking rate of four degrees per second. The same tell-tale signature is present (it was not seen at lesser rates), indicating that the pump can cavitate in a potentially damaging manner even when the system is "normal".

Figure 8 shows a damaged vane pump ring. This galling was detected by means of fluid analysis which showed an abnormal quantity of silver-gray metalic particles in a filter sediment bowl sample. A number of these particles exceeded 500 microns in size. They were traced to the vane pump through the filter location and by their composition.

After removal from service this pump was installed in the hydraulic loop and laboratory tested.

The pump normally generates twelve bursts of noise each revolution, corresponding to the twelve vanes. Noise is not phase-coherent from burst-to-burst, so the transducer signals were rectified before summing.

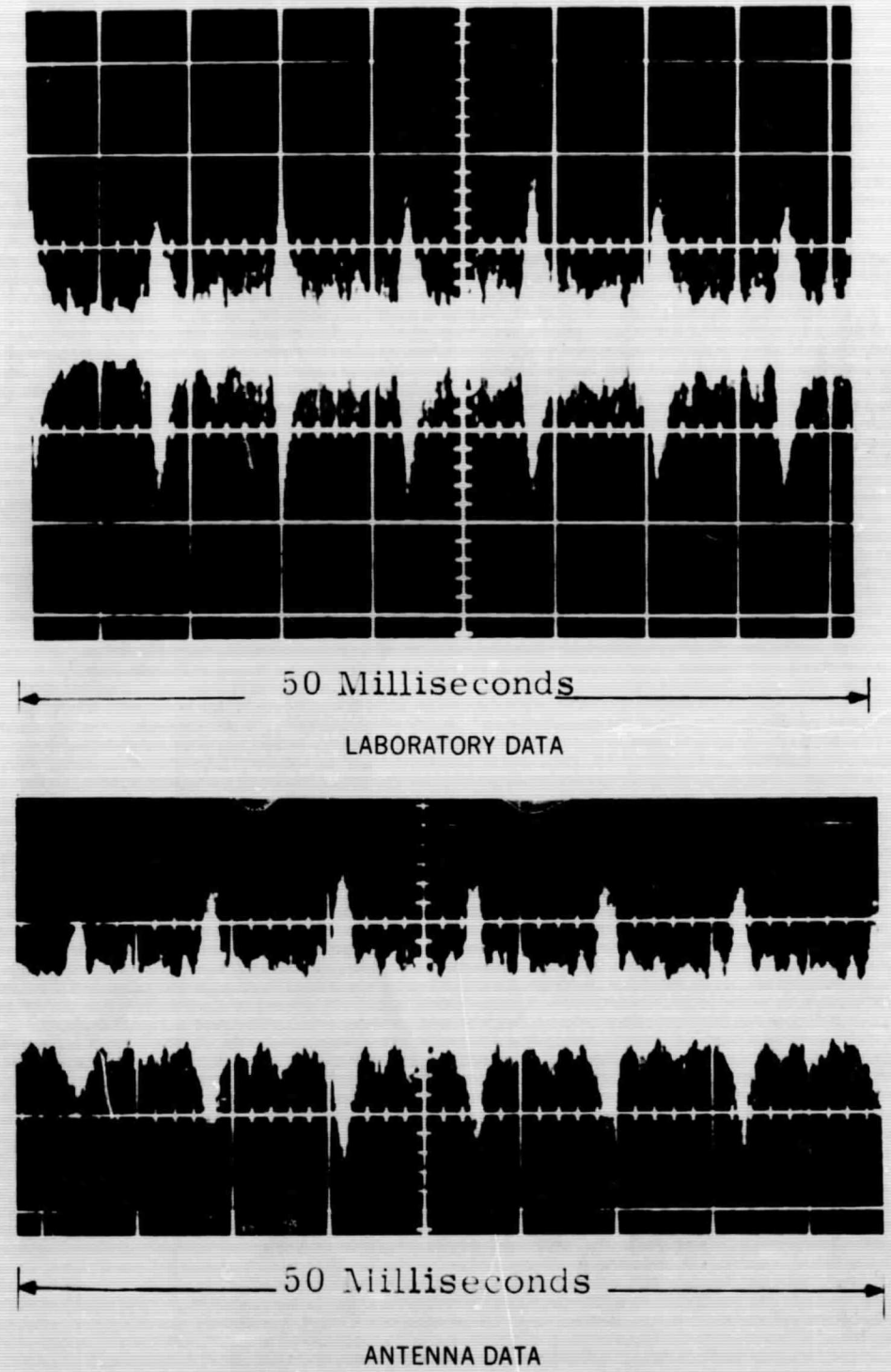

Figure 7. Piston Pump Waveforms – With Cavitation

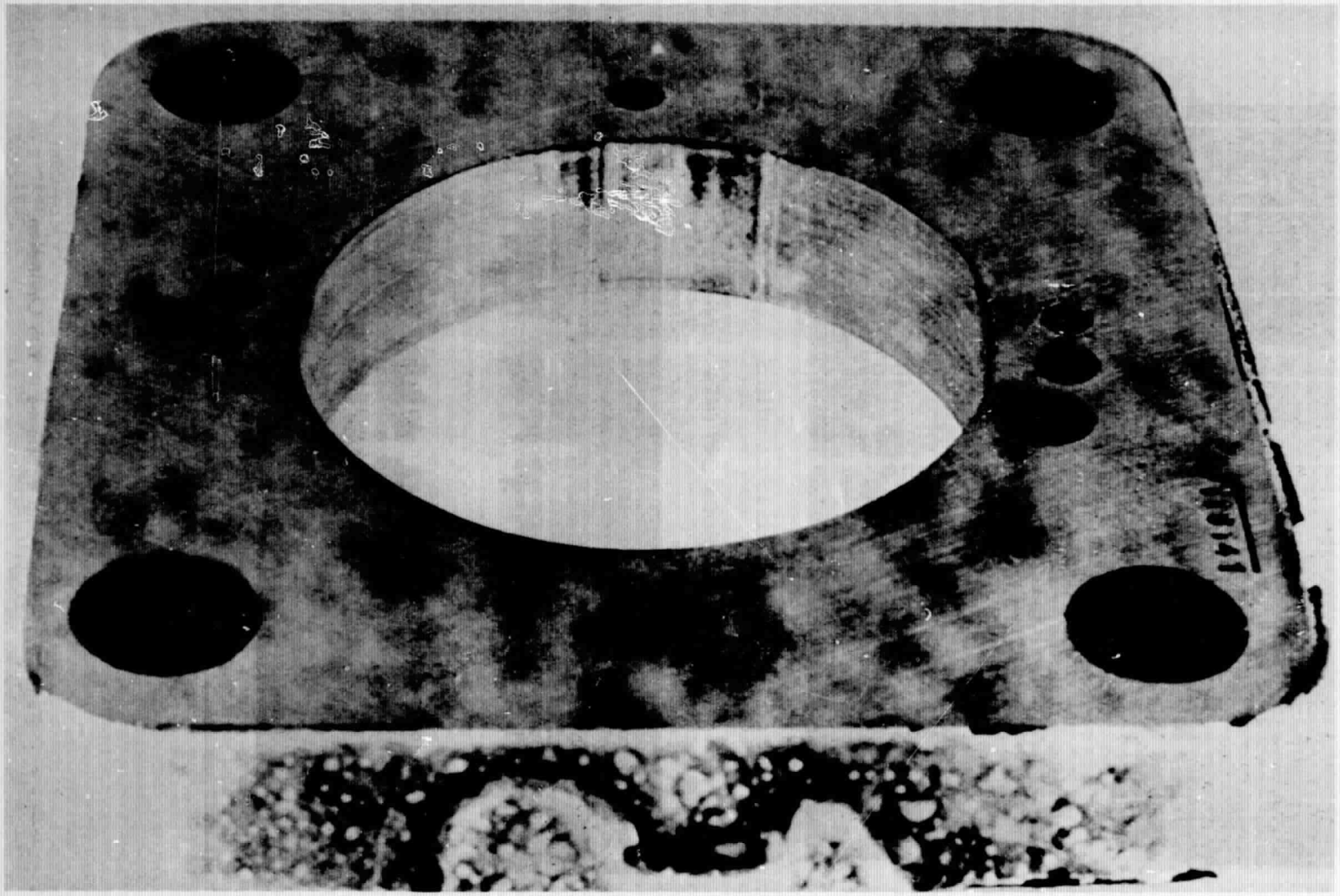

Figure 8. Galled Vane Pump Ring

The top curve of Figure 9 shows the normal pump signature, while the bottom curve shows, to the same scale, the signature of the same pump with the damaged outer ring. The large change which the defect made in the mechanical signature shows that, in all probability, it could have been detected much earlier had vibration analysis been available in the field.

As an example of mechanical signature analysis employing a technique other than summation consider the servo valve. This is an electro-hydraulic device in which current through the coils of a torque-generating device operates a hydraulic preamplifier which in turn controls the position of a spool; this permits the flow to be directed to either of two ports. When the net error signal to the coils is zero, a feedback spring causes the spool to assume a neutral position in which the only flow is due to leakage. An error signal causes the spool to displace and the valve to pass flow. The mathematical analysis shows that the valve does not respond immediately to a step input; there is an inherent delay of a few milliseconds. This can be seen in the top curve of Figure 10 which is the valve vibration after high pass filtering. Flow noise is at first low (due only to leakage), then it abruptly jumps in amplitude as the valve responds and passes flow. The bottom trace shows the flow noise of another valve with excessive leakage. The leakage is sufficiently large that the transition which is obvious in the top curve can no longer be seen.

Field Evaluation

The work described above has demonstrated the feasibility of detecting and identifying drive malfunctions by the signature analysis technique.

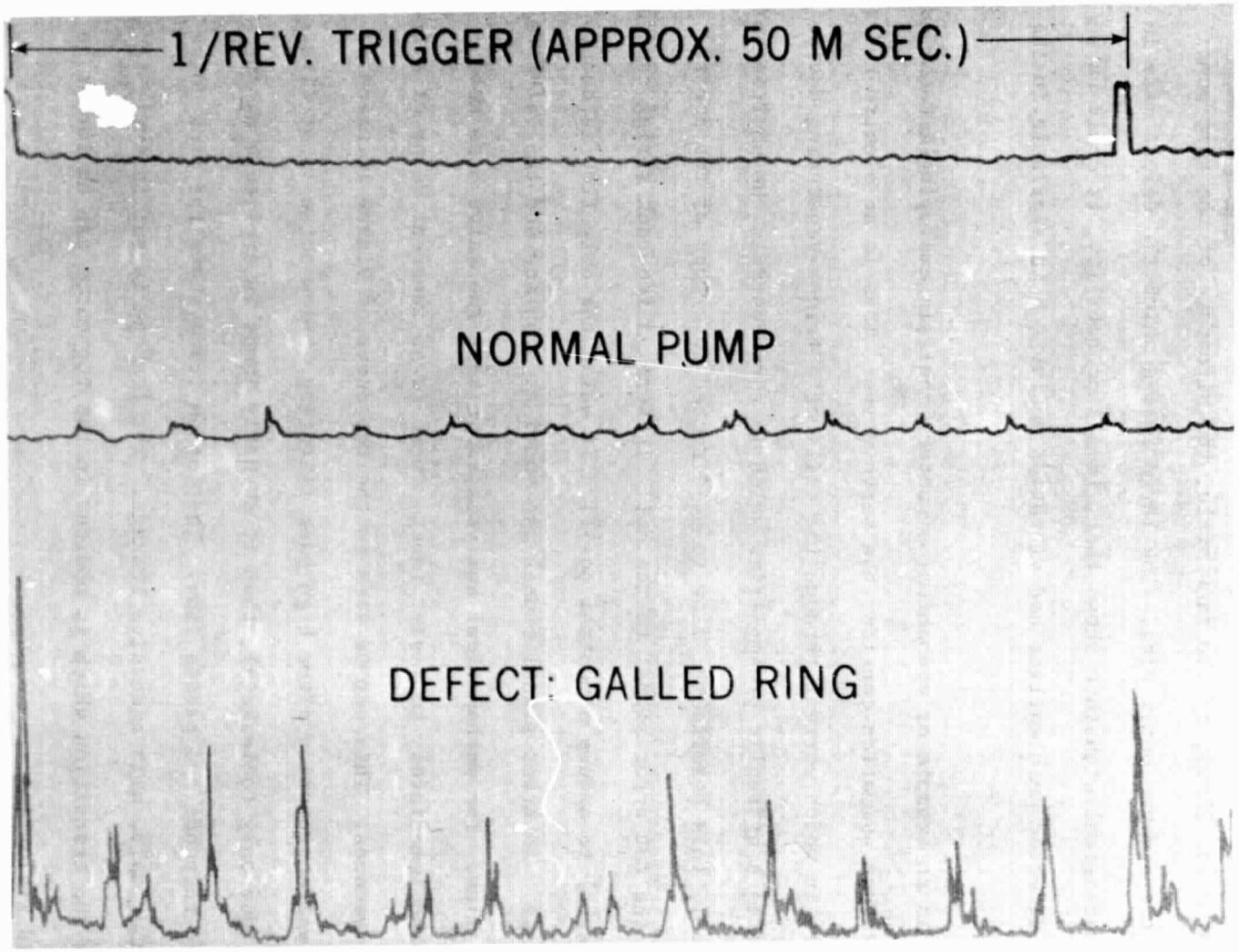

Figure 9. Vane Pump Summed Wavetorms

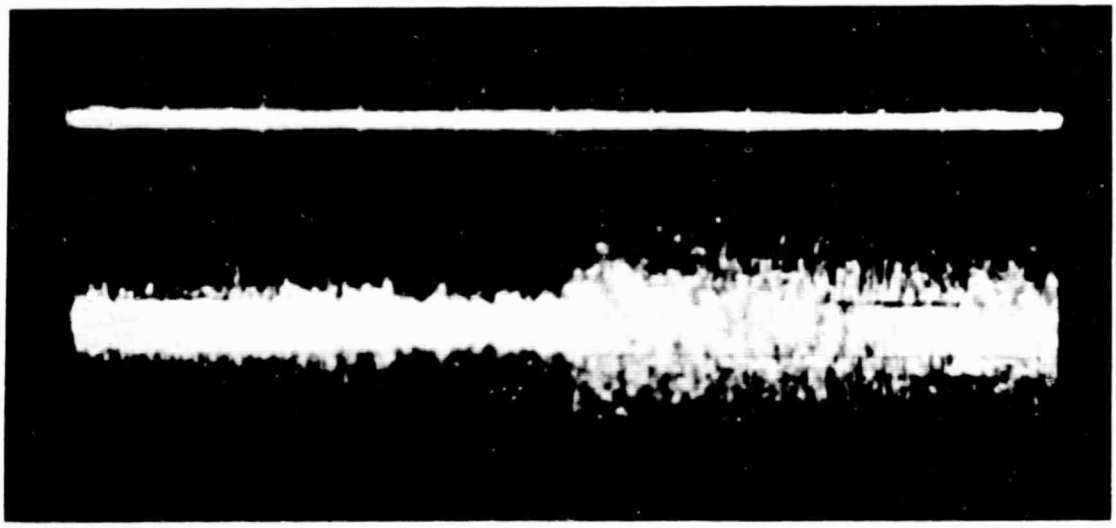

NORMAL VALVE

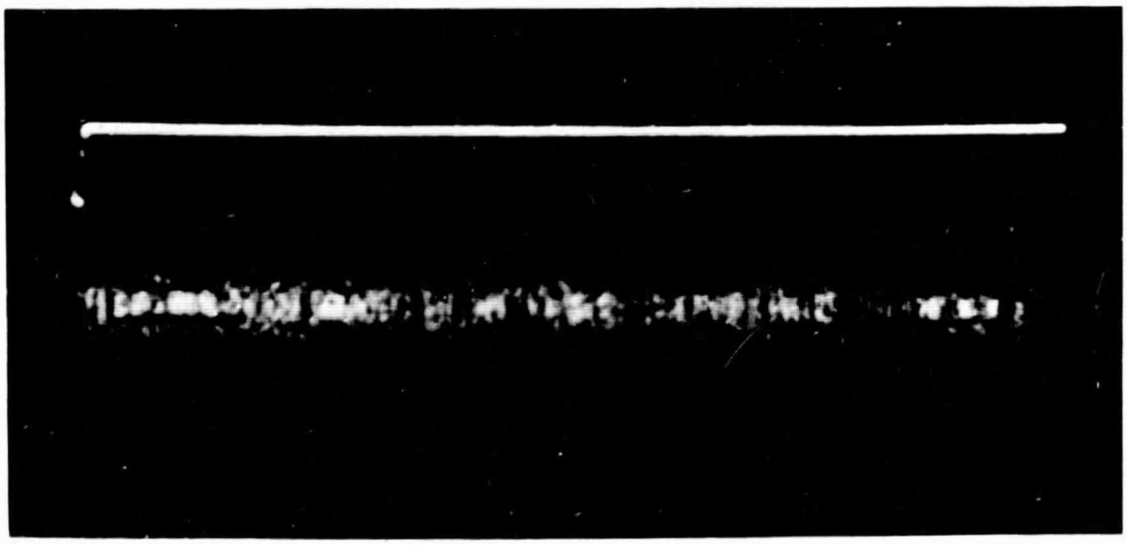

LEAKY VALVE

Figure 10. Servo Valve Waveforms – Valve Opening

This was demonstrated under laboratory conditions and in a limited field test. The second phase of the program involves more extensive field tests and additional laboratory development. Antennas at five tracking stations are being instrumented for data collection. These include three 85-foot antennas located at Goldstone, California; Madrid, Spain and Canberra, Australia and two 30-foot antennas located at Antigua, West Indies and Guaymas, Mexico.

The data acquisition system is shown in Figure 11. Vibration signals are sensed by accelerometers mounted directly on the exterior of the hydraulic machinery. These are designed to withstand the rigors of outdoor exposure, and include built-in amplifiers so that moderately long lines can be driven without signal degradation. The Data Acquisition Control has two functions. It serves as an interface to power the accelerometers and retrieve their signals, and it includes control circuits which are used to exercise particular components of the hydraulic system. In performing this latter function, trigger signals are generated which are useful in the data reduction process. The various vibration signals, the triggers, a once-per-revolution signal from a shaft-position sensor and verbal annotation are all recorded on a multi-channel instrument-quality magnetic tape recorder. The station procedure will be to record data while operating the drive through a prescribed set of exercises. The resulting data tape will be sent to GSFC for analysis. This procedure will permit a thorough field evaluation of the technique and an abundant supply of data for further development of analysis procedures.

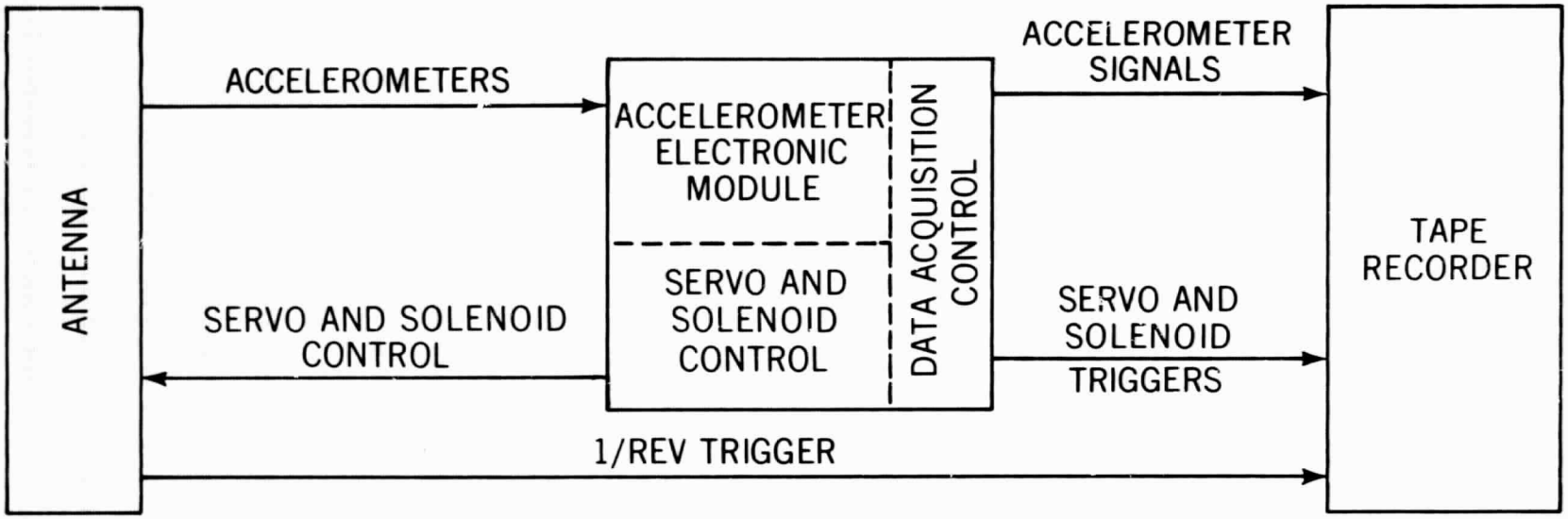

Figure 11. Data Acquisition System

The equipment used at the GSFC data reduction facility is shown in Figure 12. It is built around a tape reproducer and a transient averager. Signals may be conditioned by filtering, amplification, and rectification before being fed to the averager. The output from the averager may take one or more of several forms. First, the signal stored in memory may be displayed as an amplitude vs. time plot by means of an X-Y recorder; Figures 6b and 9 are examples. Alternately, the memory may be read out repetitively into a crestfactor meter, which is particularly useful in assessment of spall development in rolling-element bearings. Thirdly, a selected portion of the memory can be circulated and analyzed for its spectral components by means of a spectrum analyzer. The functions of the analysis system, both during the sequence in which the averager acquires data and that in which it plays the reduced data out for further analysis and interpretation, are under direction of the Analysis Control Module.

Further Development

Concurrently with the evaluation program, development of the technique will be continued with studies of additional components and malfunctions. In addition, the procedures will be adapted to additional hydraulic drive configurations.

An Antenna Simulator, located at GSFC, is an outgrowth of the hydraulic loop which was used in the verification of the concepts of the signature analyses. It includes the same basic hydraulic components, but with additional features which enhance its flexibility and usefulness. The simulator will be used for continuing research into failure mechanisms

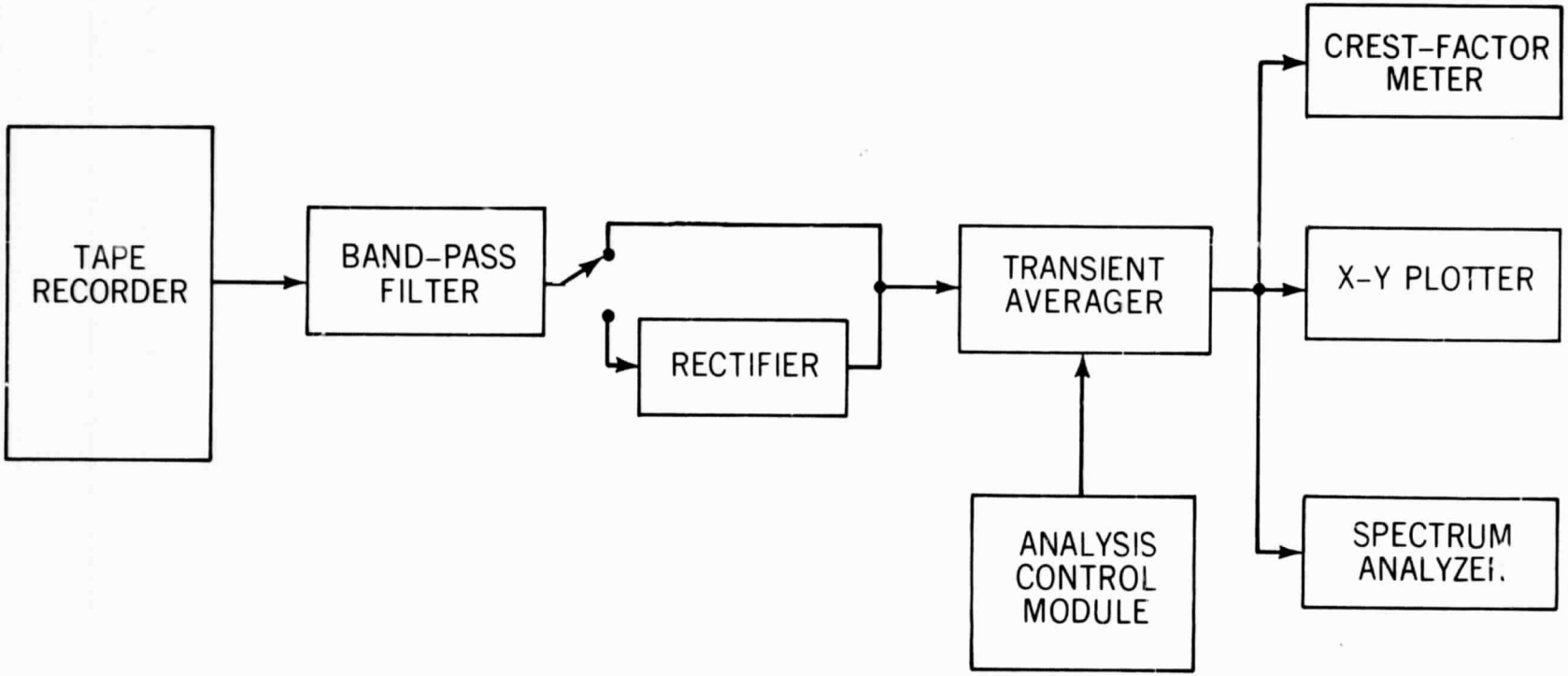

Figure 12. Data Reduction System

and their characteristic signatures. Because this is basically a laboratory facility, it permits experimentation which would be difficult to duplicate in the field because of cost, antenna availability, and possible hazard.

Several fundamental questions are to be answered based upon the information and experience gained during the second phase of the program.

1. What are the optimum procedures for collecting and analyzing data? This requires determination of the accelerometer mounting locations for the best trade-off between the number of locations and complexity of the analysis required to isolate signals resulting from the various internal processes. Selection of the best analysis methods must consider their power in detecting and identifying many specific conditions, complexity of the analysis process and the above trade-off.
2. What is the proper mix of signature analysis and fluid analysis? Neither of these techniques alone is expected to provide the degree of system reliability required in the most economical manner.
3. Should the analysis be performed by specialized hardware or by computer software?
4. Should the analysis be performed at the individual stations or centralized at GSFC?

Answers to questions 3 and 4 are closely interrelated and involve many factors. Analysis by specialized hardware at the stations would

require a set of this hardware at each station, whereas a single computer software development would serve all Apollo stations since they have identical computer installations. The hardware approach at the stations would probably require more training and greater skill and produce more variable results. Centralized analysis would require much less hardware but an equal expense for computer software development. However, the volume of data to be processed at a central point might well make computer analysis preferable. Data analysis at the stations would appear to have advantages in shorter response time, ease of repeating or expanding upon questionable results and greater involvement and understanding by station personnel.

CONCLUSIONS

Periodic fluid analysis has been found to be a valuable aid in the maintenance of antenna hydraulic drives. This technique has limitations, however, which indicate the need for more powerful methods. The most serious of these limitations stem from the facts that fluid analysis monitors only those portions of the machinery which are in contact with the fluid flow and that it is insensitive to the early indicators of malfunctions. Mechanical signature analysis overcomes these limitations. Results to date indicate that it may be successfully applied in the field to high performance hydraulic drive systems. It appears that signature analysis coupled with a diligent fluid analysis program will provide the extremely high reliability level required in space exploration.