Report MDC E0056

A TWO-STAGE FIXED WING SPACE TRANSPORTATION SYSTEM

N70-31598

FINAL REPORT

Volume II Preliminary Design

Contract No. NAS 9-9204 Schedule II

FACILITY FORM 602

N70-31598 (ACCESSION NUMBER)

(THRU)

367 (PAGES)

1 (CODE)

CR #102087 (NASA CR OR TMX OR AD NUMBER)

31 (CATEGORY)

MCDONNELL DOUGLAS CORPORATION

COPY NO. 21

Report MDC E0056
15 December 1969

A TWO-STAGE FIXED WING SPACE TRANSPORTATION SYSTEM

FINAL REPORT

Volume II Preliminary Design

Contract No. NAS 9-9204 Schedule II

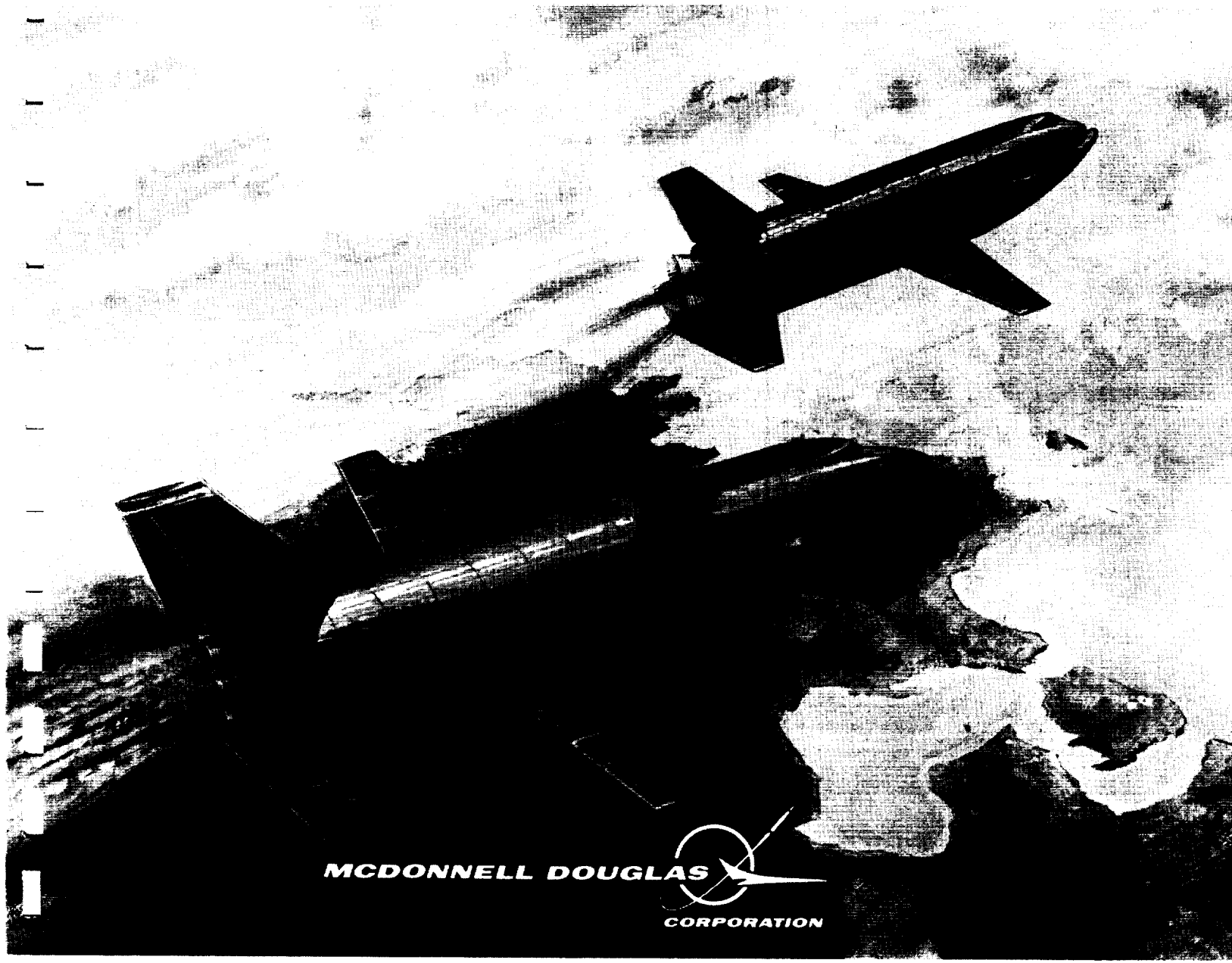

FOREWORD

This report in three volumes, summarizes the results for a McDonnell Douglas Phase A study of a Two Stage-Fixed Wing Space Transportation System for NASA MSC, and is submitted in accordance with NASA Contract NAS9-9204 Schedule II. The three volumes of the report are: Volume I - Condensed Summary; Volume II - Preliminary Design; Volume III - Mass Properties. This is Volume II which presents the preliminary design and analysis data.

This was a five month study commencing 16 July 1969 with the final report submitted on 15 December 1969. The objectives of the study were to provide verification of the feasibility and effectiveness of the MSC in-house studies and provide design improvements, to increase the depth of engineering analyses and to define a development approach. The preliminary design was to be accomplished in accordance with the design requirements specified in the statement of work, and with more detailed requirements provided by MSC at the outset of the study.

After the study had progressed to about the mid-point, NASA redirected the study from a baseline 12,500 lbs payload orbiter to a 25,000 lbs payload orbiter and changed the payload compartment size from 11 ft diameter by 44 ft, long to a 15 ft diameter by 60 ft long. Directly after this change the program was interrupted so that MDAC could respond to special emphasis requirements imposed by the September Space Shuttle Management Council Meeting.

In the interest of clarity and expediting the report, the additional configurations studied will not be covered in the document. Only the configuration having a 25,000 lbs payload in a 15 ft diameter by 60 ft long payload compartment is described in this report. However the information on other configurations had been transmitted previously to NASA as the work progressed.

The study included eight tasks: Flight Dynamics Analysis, Thermal Protection System, Subsystem Analyses, Design; Mass Properties Analysis; Mission Analysis; Design Sensitivity Analyses; and Programmatic Analyses.

The study was managed and supervised by Winston D. Nold, Study Manager of McDonnell Douglas Astronautics Company - Eastern Division. NASA technical direction was administered through James A. Chamberlin, and contractual direction was provided by Willie S. Beckham from NASA Manned Spacecraft Center.

TABLE OF CONTENTS

SECTION	TITLE	PAGE
	FOREWORD	i
1.	SUMMARY	1-1
2.	STUDY GUIDELINES	2-1
3.	DESIGN INTEGRATION	3-1
3.1	Vehicle Characteristics	3-1
3.1.1	Launch Configuration	3-1
3.1.1.1	Stage Mate Arrangements	3-2
3.1.2	Orbiter	3-3
3.1.2.1	Confiugration Description	3-3
3.1.2.2	Design Features	3-3
3.1.2.3	Inboard Profile	3-5
3.1.2.4	Subsystem Arrangement	3-6
3.1.2.5	Personnel Provisions	3-6
3.1.2.6	Interstage Connection	3-8
3.1.2.7	Payload Integration	3-9
3.1.2.8	Payload Deployment	3-10
3.1.2.9	Docking Provisions	3-10
3.1.2.10	Fuselage Shingle Installation	3-11
3.1.2.11	Leading Edge Construction	3-12
3.1.3	Booster	3-13
3.1.3.1	Configuration Description	3-13
3.1.3.2	Design Features	3-14
3.1.4	Landing System-General	3-15
3.1.4.1	Orbiter Landing System	3-15
3.1.4.2	Booster Landing System	3-17
3.2	Structural Design	3-19
3.2.1	Description of Structures	3-19

SECTION	TITLE	PAGE
3.2.1.1	Orbiter Fuselage	3-19
3.2.1.2	Booster Fuselage	3-25
3.2.1.3	Wing Structures	3-26
3.2.2	Structural Design Criteria	3-27
3.2.2.1	Definitions	3-28
3.2.2.2	General Arrangement and Design Weights	3-28
3.2.2.3	Fundamental Criteria	3-28
3.2.2.4	Mission Phase Related Criteria	3-30
3.2.3	Loads	3-33
3.2.3.1	Ground Phase	3-37
3.2.3.2	Ascent Phase	3-39
3.2.3.3	Cruise Phase	3-39
3.2.3.4	Landing Phase	3-39
3.2.4	Analysis	3-48
3.2.4.1	Fuselage Structures	3-48
3.2.4.2	Fixed Lifting Surfaces	3-71
3.2.4.3	Thermal Protection System Structures	3-75
3.3	Mass Properties Summary	3-89
3.4	Subsystems	3-90
3.4.1	Hydraulic System	3-90
3.4.1.1	General	3-90
3.4.1.2	Systems Quantity	3-90
3.4.1.3	Power Source	3-91
3.4.1.4	System Characteristics	3-92
3.4.2	Environmental Control System	3-93
3.4.2.1	Orbiter ECS	3-93
3.4.2.2	Booster	3-98

SECTION	TITLE	PAGE
4.	AERODYNAMICS	4-1
4.1	Ascent Confiugration Aerodynamics	4-2
4.2	Hypersonic Aerodynamics	4-3
4.3	Transonic Trim Requirements	4-6
4.4	Subsonic Transition Aero ($\alpha = 0 \rightarrow 90°$)	4-6
4.5	Subsonic Trim Aerodynamic Characteristics	4-8
5.	THERMAL PROTECTION SYSTEM	5-1
5.1	Summary	5-1
5.2	TPS Baseline Description and Weights	5-3
5.2.1	Orbiter TPS	5-3
5.2.2	Booster TPS and Weight	5-7
5.2.3	Orbiter TPS Weights and Distributions	5-8
5.3	Heating Rate Distributions	5-11
5.3.1	Baseline Design Distributions	5-11
5.3.2	Fuselage Bottom Heating; Data and Theory	5-15
5.3.3	Laminar Fuselage Heating	5-17
5.3.4	Flow Interference Effects	5-18
5.4	Design Trajectories and Surface Temperature Predictions	5-21
5.5	TPS Material Evaluations	5-25
5.5.1	HCF Insulation	5-26
5.5.2	Carbon	5-27
5.5.3	Insulation	5-32
5.6	Metallic Vs. Non-Metallic TPS Comparisons	5-35
5.7	Thermal Protection Analysis	5-39
5.7.1	Thermal Model	5-39
5.7.2	Thermal Properties	5-40
5.7.3	Thermal Sizing Assumptions	5-40
5.7.4	Cross Range Trajectory Heating Rates	5-40
5.7.5	Fuselage Heating Distributions	5-44
5.7.6	Wing Heating Distributions	5-49

SECTION	TITLE	PAGE
5.8	Space Shuttle TPS Problems	5-52
6.	PROPULSION	6-1
6.1	Boost Engine Analysis	6-2
6.1.1	Sizing	6-2
6.1.2	Bell Vs. Aerospike Comparison	6-4
6.1.3	Gimbal Limits Analysis	6-5
6.1.4	Boost Engine Feed System	6-7
6.2	Orbit Propulsion	6-10
6.2.1	Requirements	6-10
6.2.2	Orbit Maneuver System Description	6-12
6.2.3	Reaction Control System (RCS) Description	6-14
6.2.3.1	RCS Engine Arrangement	6-14
6.2.3.2	RCS System Type	6-15
6.3	Subsonic Cruise	6-16
6.3.1	Orbiter Cruise Propulsion	6-17
6.3.1.1	Engine Selection	6-17
6.3.1.2	Fuel Requirements	6-17
6.3.1.3	Installation Features	6-18
6.3.1.4	Design Improvements	6-20
6.3.2	Booster Cruise Propulsion	6-20
6.3.2.1	Engine Selection	6-20
6.3.2.2	Fuel Requirements	6-23
6.3.2.3	Installation Features	6-23
6.3.2.4	Design Improvements	6-23
6.4	Sensitivities	6-23
7.	INTEGRATED AVIONICS	7-1
7.1	System Definition	7-3
7.2	Data Management System (DMS)	7-5
7.2.1	Requirements	7-5
7.2.2	System Description	7-5
7.2.3	Alternate	7-10
7.2.4	Conclusions and Recommendations	7-12

SECTION	TITLE	PAGE
7.3	Self Test and Warning	7-13
7.3.1	Summary	7-13
7.3.2	Functional Requirements and Goals	7-13
7.3.3	System Concept	7-14
7.3.4	Built-in Test Implementation	7-15
7.3.5	Central Computer Complex BIT Software	7-19
7.3.6	CCC BIT Sequencing and Control	7-20
7.3.7	BIT Display Formatting	7-20
7.3.8	Installation	7-20
7.4	Displays and Controls	7-21
7.4.1	Requirements	7-22
7.4.2	Baseline Description	7-22
7.4.3	Alternate Concept Evaluations	7-27
7.4.4	Technology Status	7-28
7.4.5	Problem Areas/Technology Recommendations	7-30
7.5	Guidance Navigation and Control	7-31
7.5.1	Requirements	7-31
7.5.2	System Description	7-33
7.5.3	System Evaluation and Trade-offs	7-34
7.5.4	Conclusion and Recommendation	7-40
7.6	Telecommunications Subsystems	7-42
7.6.1	Requirements	7-42
7.6.2	System Description	7-43
7.6.3	Alternate Concepts Evaluated	7-53
7.6.4	Conclusions and Recommendations	7-53
7.7	Electrical Power	7-60
7.7.1	Electrical Power Requirements	7-60
7.7.2	Electrical Power Subsystem (EPS) Baseline	7-60
7.7.2.1	Orbiter Power Source	7-66
7.7.2.2	Booster Power Source	7-66
7.7.3	Alternate Concepts	7-67
7.7.4	Distribution Voltage Trade Study	7-67
7.7.5	Reliability	7-69
7.7.6	Conclusions and Recommendations	7-69

SECTION	TITLE	PAGE
7.8	Integrated Avionics Reliability	7-70
7.9	Equipment Installation	7-70
8.	PERFORMANCE AND FLIGHT MECHANICS	8-1
8.1	Ascent Trajectory Analysis	8-1
8.2	Booster-Orbiter Separation	8-3
8.3	Booster Entry/Flyback	8-5
8.4	Entry Trajectory	8-6
8.5	Angle of Attack Transition	8-7
8.6	Obiter/Booster Jet Engine Level Flight Envelopes.	8-8
8.7	Approach and Landing	8-9
8.8	Go-Around	8-11
8.9	Take-Off Performance and Ferry Capability	8-11
8.10	Handling Qualities	8-12
8.10.1	Longitudinal Short Period Dynamics	8-12
8.10.2	Lateral-Directional Dynamics	8-14
8.10.3	Reentry Control	8-17
9.	OPERATIONS, SAFETY & MAINTENANCE	9-1
9.1	Ground Operations	9-1
9.1.1	Ground Checkout	9-1
9.1.2	Operational Techniques	9-2
9.1.3	Facilities	9-5
9.1.4	Ground Support Equipment (GSE)	9-6
9.2	Maintenance	9-7
9.3	Safety Analysis	9-9
9.3.1	Goals and Guideline	9-9
9.3.2	Design Evaluation for Safety	9-11
9.3.3	Critical Subsystem Identification	9-15
9.3.4	Landing Analysis	9-16
10.	DEVELOPMENT, TEST, AND PRODUCTION	10-1
10.1	Supporting Research and Technology Development.	10-1
10.2	Development Test Plan	10-15
10.2.1	Phase B Definition	10-17
10.2.2	Phase C Design	10-17
10.2.3	Phase D Acquisition	10-18

SECTION	TITLE	PAGE
10.2.3.1	Development Tests	10-18
10.2.3.2	Vehicle Proof and Functional Tests	10-27
10.2.3.3	Qualification Tests	10-27
10.2.3.4	Acceptance Tests	10-27
10.2.3.5	Aerospace Ground Equipment (AGE)	10-28
10.2.3.6	Development Flight Test	10-28
10.3	Specifications	10-32
10.4	Program Control	10-35
10.5	Reliability Analysis	10-38
10.5.1	Reliability Criteria and Goals	10-38
10.5.2	Subsystem Apportionments	10-39
10.5.3	Subsystem Estimates	10-39
10.6	Test and Checkout	10-45
10.6.1	Test and Checkout Philosophy	10-45
11.	FACILITIES REQUIREMENTS	11-1
11.1	Manufacturing and Assembly	11-1
11.2	Ground Test	11-1
11.3	Flight Test	11-3
11.4	Operations	11-3
11.4.1	On-Pad Build-Up	11-4
11.4.2	Pre-Pad Erection	11-4
12.	REFERENCES	12-1

LIST OF EFFECTIVE PAGES

i through viii

1-1

2-1 through 2-4
3-1 through 3-99
4-1 through 4-10
5-1 through 5-53
6-1 through 6-23
7-1 through 7-72
8-1 through 8-18
9-1 through 9-16
10-1 through 10-47
11-1 through 11-4
12-1 through 12-3

1. SUMMARY

The growth of future manned space exploration is dependent upon the development of a reusable space transportation system with operational practices similar to present day aircraft procedures. Such a system could achieve a dramatic reduction of operational costs and allow a rapid expansion of space flight.

A two stage configuration satisfying these requirements has been conceived by NASA-MSC. An important feature of this configuration is that both the orbiter and booster have fixed wings and tail and look similar to conventional aircraft. The fixed wing provides good subsonic cruise and horizontal landing characteristics which are very similar to present day high performance aircraft.

The ability to enter the atmosphere with a fixed wing is made possible by configuring the vehicle to be aerodynamically stable at high angles of attack of approximately 60°. This effectively exposes only the bottom surface to the entry heating, which in turn is also considerably reduced because of the low planform loading. Sufficient analysis has been accomplished to show that this concept is feasible. A vehicle can be aerodynamically configured to have a hypersonic through subsonic velocity high α trim point and also be able to fly subsonically at a trim low α.

A reaction control system is used to provide on-orbit attitude control and terminal rendezvous and docking translation ΔV. The RCS also provides attitude damping and roll attitude control for lift vector orientation about the velocity vector during entry.

Designs of both stages incorporate conventional structural design techniques. The fixed wing is of conventional construction, except for the heat protection. The fuselage uses an integral tank structure with associated frames to pick up the concentrated loads. The fan cruise engines are fixed in the forward fuselage which aids in balancing the vehicle and simplifies the installation. The primary heat protection is provided by silica cloth faced hardened insulation and pyrolized carbon laminate composite.

We have concluded that this concept is a viable configuration. The technical analysis and design results bear this out. As appropriate, pertinent analyses and data generated by the NASA-MSC in-house study is included in the report.

2. STUDY GUIDELINES

A Configuration Control Plan was established to provide a common working baseline for all elements in the study. This plan contained the guidelines and constraints under which the study was to be conducted. For completeness and to provide an insight as to why certain systems were configured as shown, the guidelines and constraints are included herein.

Programmatic Considerations

- o Initial Operational Capability - Mid 1976.
- o Assume a 10 year operational program.
- o Use FY72 as technological base.
- o Weights will be reported in accordance with MIL M 38310A (Modified).
- o Launch rates will vary between 10-100/year.
- o Space to ground communications via a comm satellite are assumed.
- o The vehicle and its systems shall be capable of use for 100 missions with a minimum of maintenance.

Mission

- o Baseline mission orbital parameters shall be 270 n.m., 55° inclination.
- o Launch site - ETR or WTR. Specified payload assumes ETR launch to baseline mission orbit.
- o Payload - Major emphasis of the study will be the design of a 25,000 lb. payload system with a 15 ft. diameter by 60 ft. cargo bay. Excursions to examine a 50,000 lb. payload system with a 15 ft. diameter by 60 ft. bay will be permitted.
- o Return opportunity to primary landing site shall be available at least once every 24 hours.

Operations

- o No restrictions of a safety or operational nature will be imposed on launch azimuth selection.
- o Vehicle shall have a 2000 fps ΔV capability over that required to reach a reference 51 x 100 n.m. insertion orbit.

- All mission ground operations shall be conducted from a common facility.
- Vehicle shall be designed for maximum onboard control utilizing onboard and ground capabilities as appropriate to minimize costs.
- The launch site, a landing facility and servicing facility shall be in the same location to minimize costs.
- The vehicle shall have minimal assembly and checkout requirements at the launch facility.
- Use of specialized facilities (clean rooms, altitude chambers, etc.) on a routine basis shall be minimized.
- To accomplish rendezvous, vehicle shall be designed to accommodate a 60 second launch window.
- Vehicles must hard dock to space station/base.
- Cargo and personnel transfer shall be IVA.
- Vehicle cruise flight landing characteristics shall be comparable to existing high performance aircraft.
- Vehicles shall be capable of landing on standard runways of 8,000 ft. length.
- The vehicle shall be equipped with an automatic rendezvous capability.

Vehicle

- Systems shall provide for 7 days of consumables. Mission durations in excess of this amount will be treated as cargo.
- The vehicle shall have a two-man flight crew but shall be flyable by one crewman.
- The boost vehicle will be capable of both manned and unmanned operations.
- Provisions to "safe" the vehicle at mission termination shall be provided onboard.
- Cargo will be self contained and provide protective devices as required.
- Vehicle shall have capability to deploy the cylindrical payload sizes specified.
- Vehicle shall be designed to flight loads acceptable to nonflight crew personnel. Limits include commercial V-N limits; 3G eyeball in accelerations.

- Redundant systems shall have capabilities such that the nominal mission may be continued. No minimum backup, minimum performance approach for backup systems is acceptable.
- The vehicle shall provide for safe mission termination for malfunctions during all mission phases. Desired approach is for personnel egress prior to liftoff and intact abort subsequently.
- Redundance techniques which minimize or eliminate transients during failure and switchover are preferred.
- All subsystems shall be designed to fail operational after failure of the most critical component and fail safe after the second. Electronic systems shall be designed to fail operational after failure of two (2) most critical components and fail safe after the third (3) failure.
- The vehicle shall have design characteristics (i.e. planform loading and trimmable attitude) and reentry flight parameters that will provide low heating rate profiles necessary for maximum utilization of reusable thermal protection materials.
- Vehicle sensitivity to weather during all prelaunch operations shall be minimized.
- Sensitivity to fluid consumables loading shall be minimized.
- EVA capability shall be provided.
- Vehicles shall have cruise capability on conventional jet engines to accommodate ferrying, incremental flight testing and horizontal end of mission landing.
- Vehicle shall be capable of a landing go-around with engine out.
- Landing visibility shall be comparable to current high performance aircraft.
- It shall be possible to perform a direct reentry from circular orbits as high as 270 n. mi. at inertial flight path angles at 400,000 ft. up to a maximum of $\pm 1.5°$ and yaw angles of $\pm 45°$ at the nominal angle of attack $\pm 5°$.
- The reentry vehicle shall have static aerodynamic stability in pitch and yaw and neutral stability in roll based on the stability axis systems. This will permit Reaction Control System (RCS) damping of attitude rates and

lift vector orientation control by means of roll control about the velocity vector. Aerodynamic controls shall not be employed for hypersonic or supersonic aerodynamic control except for trim adjustments required by off-nominal payload CG and weight.

- Cabin shall provide shirtsleeve environment.
- Vehicle shall have pressurizable passageway for IVA crew access to payload bay.
- Vehicle atmosphere and pressure must match space station/base when docked.
- Vehicle shall have an onboard checkout capability for use during preflight and flight mission phases.
- G&N functions shall be performed onboard utilizing ground and other navigations aids as appropriate. The system shall impose no attitude restrictions on the S/C.
- A three axis translation system and a three axis attitude control system will be provided. Design should minimize coupling with a thruster inoperative.
- No ablative or transpiration cooled thermal protection systems are acceptable.
- Boost engines to be considered are: high pressure bell engine; aerospike engine (alternate).
- Cruise engines will be fixed.

Other Considerations

- 1962 U.S. Standard Atmosphere will be used.
- 99 percent winds will be used for loads analysis.
- Hypersonic L/D's will be referenced to conditions at MACH 20 and 200,000 feet.

3. DESIGN INTEGRATION

3.1 Vehicle Characteristics - The system shown in Figure 3.1-1 is a two stage fixed wing vehicle consisting of a first stage (BOOSTER) which provides launch capability utilizing ten (10) high pressure bell engines of 400,000 lbs sea level thrust.

The second stage (ORBITER) is sized to carry 25,000 pounds payload into orbit and return. The orbiter uses two (2) high pressure bell engines of 400,000 lbs sea level thrust.

Both vehicles are capable of low level horizontal flight, approach, landing and go around.

VEHICLE CHARACTERISTICS

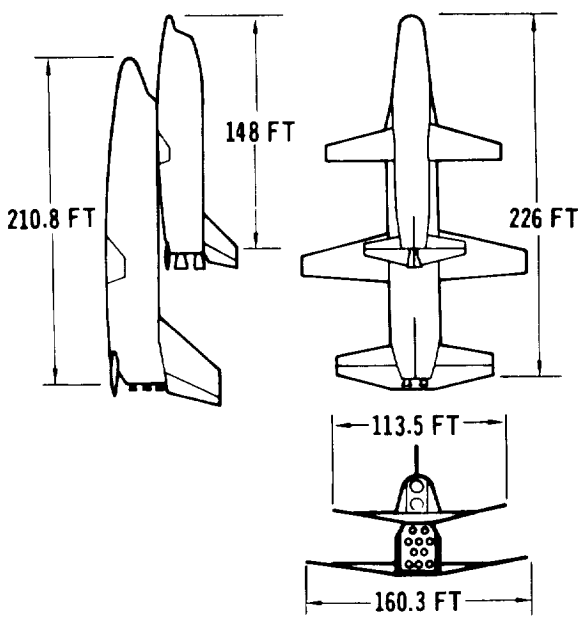

PAYLOAD: 25,000 LB (UP & DOWN)
PAYLOAD BAY: 15 FT x 60 FT
GROSS LIFT OFF WT: 2.854 M LB
CROSS RANGE: 230 N.M.
MANEUVERING ΔV: 2000 FT/SEC
MAX L/D HYPERSONIC
ORBITER: 1.6
BOOSTER: 1.6
LANDING SPEED: 138 KNOTS
MAX L/D SUBSONIC
ORBITER: 8.10
BOOSTER: 7.15
LANDING WEIGHT
ORBITER: 158,840 LB
BOOSTER: 317,310 LB

Figure 3.1-1

3.1.1 Launch Configuration - The launch arrangement configuration Figure 3.1-2 stands 226 ft above the launch pad. The base of the launch pad is inclined 1.3 degrees so that the thrust vector of the booster engines passes through the center of gravity and is normal to the surface of the earth.

LAUNCH ARRANGEMENT

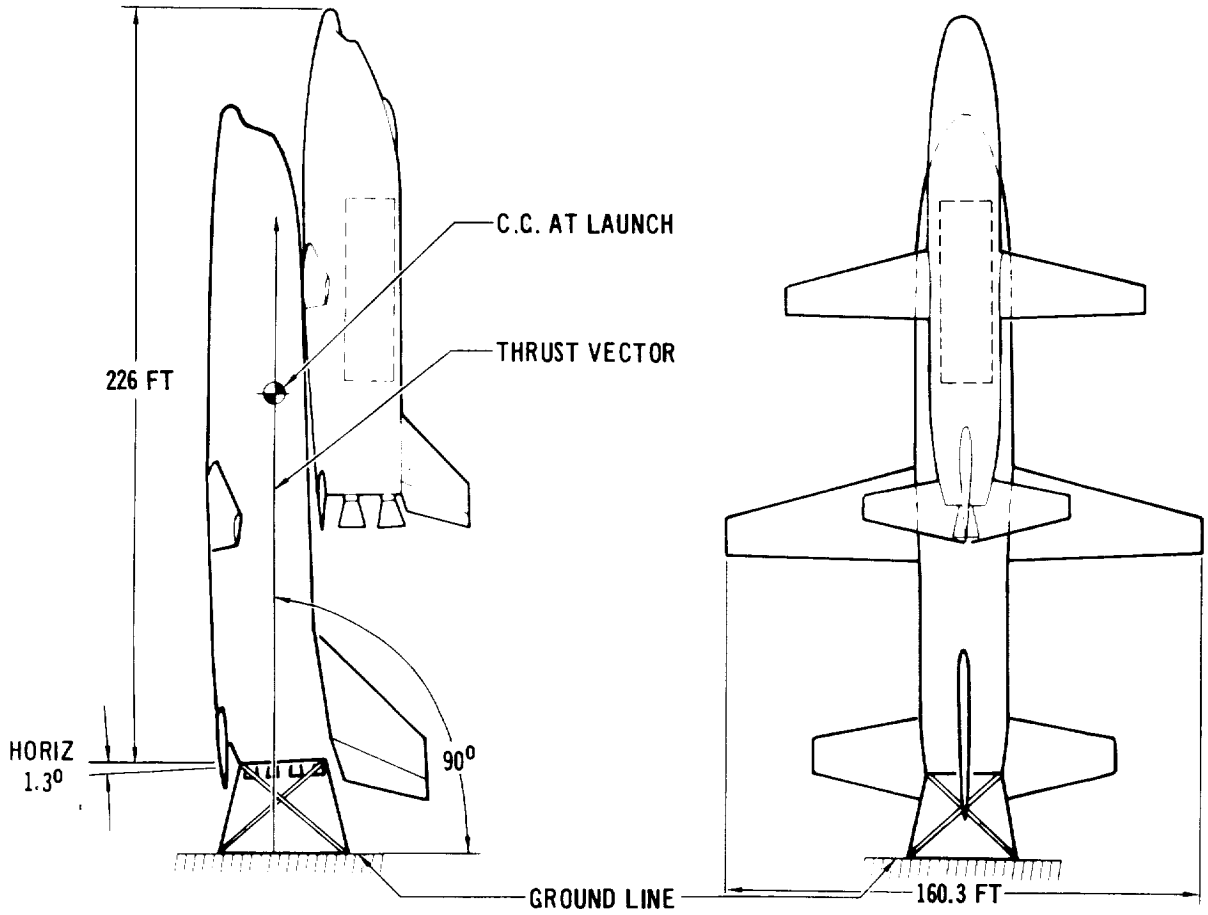

Figure 3.1-2

3.1.1.1 Stage Mate Arrangements - The orbiter is mounted well forward on the booster. This location was chosen over the two alternates shown in Figure 3.1-3 for the following reasons:

a. The gimbal angle variation required to track the center of gravity is the lowest. This means the most allowable remaining gimbal angle for control purposes.

b. The wing angle of attack during boost can be arranged to be zero at maximum dynamic pressure on both vehicles. This is not true for alternate II.

c. Aerodynamic surfaces are not in close proximity to each other thereby minimizing aeroelastic flow interference problems.

d. Configuration has the capability of mating stages horizontally prior to erecting for launch. Alternate II does not have this advantage.

e. No folding aerodynamic surfaces are required. Alternate I vertical fin of booster must fold.

STAGE MATE ARRANGEMENTS

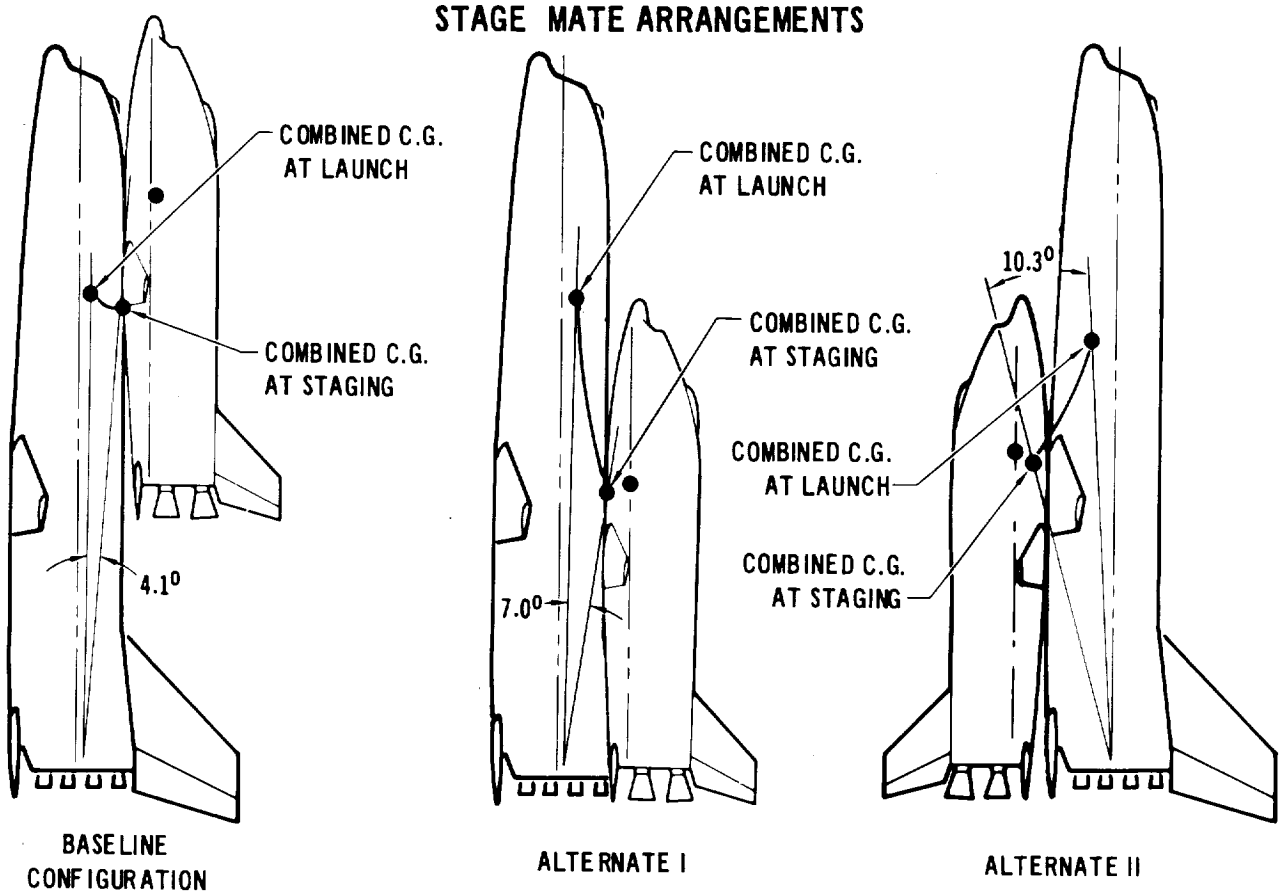

Figure 3.1-3

3.1.2 Orbiter

3.1.2.1 Configuration Description - The orbiter is a fixed wing reusable vehicle accommodating a crew of two with a payload capability of 25,000 pounds to and from orbit. The payload cargo bay is 15 ft in diameter and 60 ft long and payload deployment capability is provided. The General Arrangement and Geometric Data is shown in Figures 3.1-4 and 3.1-5.

3.1.2.2 Design Features - The orbiter controls for the subsonic landing and approach consist of conventional ailerons, elevators, rudder and double slotted flaps. The RCS system provides orientation control throughout entry and orbital phases. Four (4) turbofan engines provide power for conventional airplane flying qualities and landing practices. A retractable tricycle landing gear is provided. Two (2) boost engines are provided for initial orbital injection, orbital maneuvering and deorbit.

a. Structure - General - The orbiter structural design approach utilizes the main propellant tanks as an integral part of the fuselage structure.

The aluminum tanks are combined with titanium longerons, frames and skin to form the basic fuselage structure.

The wings, stabilizer and fins are conventional titanium integral stiffened skin, spar and rib construction. The details of the structure are covered in Section 3.2.

b. Thermal Protection System - General - The Orbiter Thermal Protection design approach consists of Hardened Compacted Fibers (HCF) and pyrolized carbon laminate. The nose, chine line, leading edge of wing, stabilizer and fin utilize pyrolized carbon laminates. The fuselage bottom, sides and under side of the wing and stabilizer utilize HCF. Further details are covered in Paragraph 3.1.2.10 and 3.1.2.11 and Section 5.

GENERAL ARRANGEMENT – ORBITER

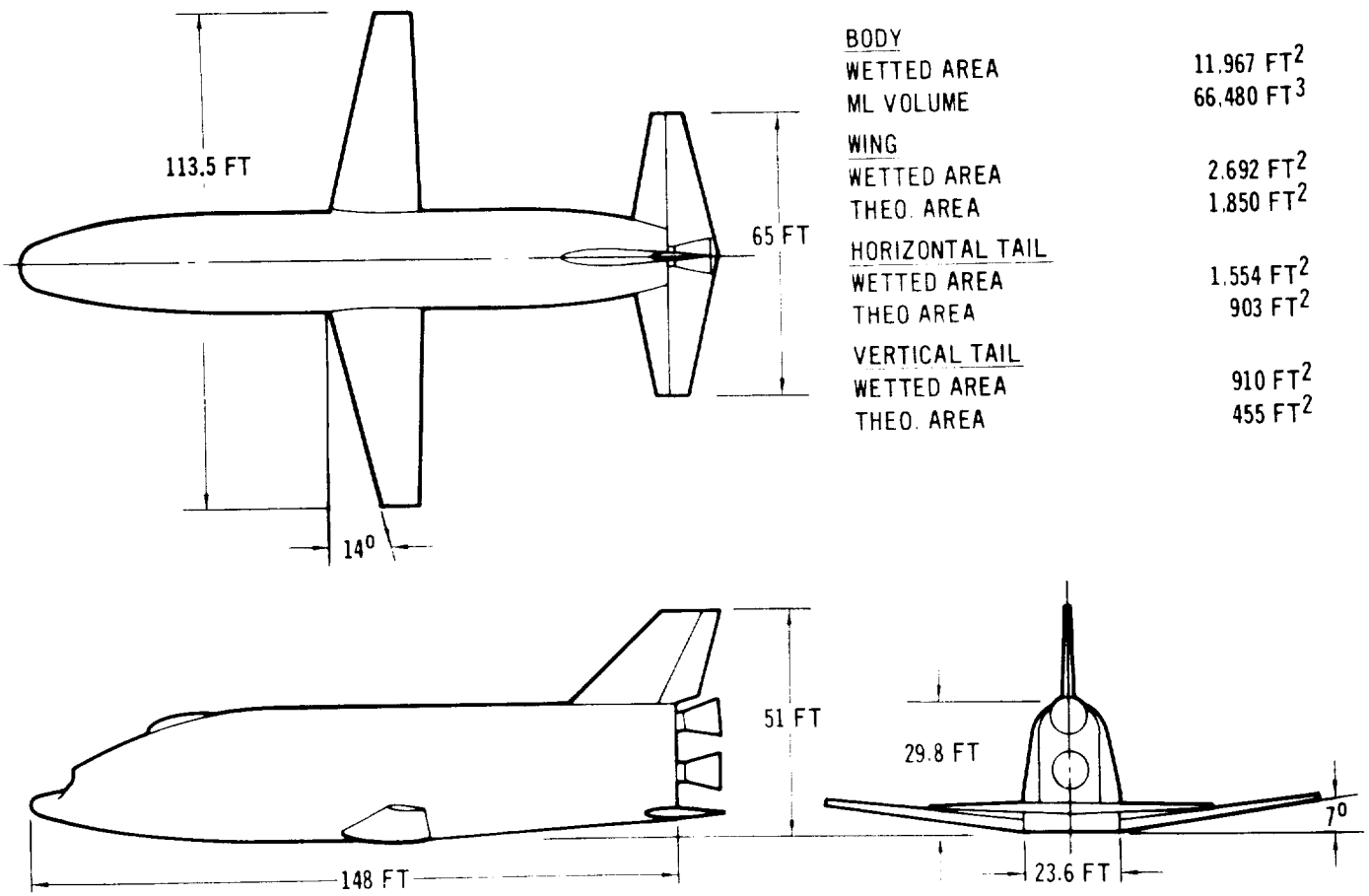

BODY	
WETTED AREA	11,967 FT^2
ML VOLUME	66,480 FT^3
WING	
WETTED AREA	2,692 FT^2
THEO. AREA	1,850 FT^2
HORIZONTAL TAIL	
WETTED AREA	1,554 FT^2
THEO AREA	903 FT^2
VERTICAL TAIL	
WETTED AREA	910 FT^2
THEO. AREA	455 FT^2

Figure 3.1–4

GEOMETRIC DATA - ORBITER

Vehicle Weights	
Gross Weight	602,280 lb.
Entry Weight	161,910 lb.
Landing Weight	158,840 lb.
Vehicle Geometry	
Total Projected Planform Area	5,150 ft
Body Geometry	
Wetted Area	11,967 ft^2
ML Volume	66,480 ft^3
Length	148 ft
Bottom Wetted Area	3,027 ft^2
Wing Geometry	
Wetted Area	2,692 ft^2
Theoretical Area	1,850 ft^2
Exposed Area	1,346 ft^2
Span (b)	113.5 ft
Aspect Ratio (AR)	7:1
Dihedral Angle	7°
L. E. Sweep	14°
Taper Ratio	.353:1
M.A.C. ($\bar{c}$)	17.5 ft
Root Chord (C_R)	24.1 ft
Tip Chord (C_T)	8.5 ft
Airfoil Section at Root (body ℄)	NACA 0014-64
Airfoil Section at Tip	NACA 0010-64
Flaps, Double Slotted	30% C X 60% b exposed
Flaps Movement Max	55°
Ailerons	25% C X 30% b exposed
Ailerons Deflection	± 20°
Horizontal Tail Geometry	
Wetted Area	1,554 ft^2
Theoretical Area	903 ft^2
Exposed Area	777 ft^2
Span (b)	65 ft
Aspect Ratio (AR)	4.68:1
L. E. Sweep	10°
Taper Ratio	354:1
Root Chord (C_R)	20.5 ft
Tip Chord (C_T)	7.25 ft
M.A.C. ($\bar{c}$)	14.9 ft
Airfoil Section	NACA 0012-64
Elevator	56% C X b
Elevator Deflection	± 40°
Vertical Tail Geometry	
Wetted Area	910 ft^2
Theoretical Area	455 ft^2
Exposed Area	455 ft^2
Span (b)	21.2 ft
Aspect Ratio (AR)	.98:1
L. E. Sweep	45°
Taper Ratio	.472:1
Root Chord (C_R)	29.2 ft
Tip Chord (C_T)	13.75 ft
M.A.C. ($\bar{c}$)	22.4 ft
Airfoil Section	NACA 0012-64
Rudder	30% C X b
Rudder Deflection	± 25°

Figure 3.1-5

3.1.2.3 Inboard Profile - The arrangement of key features are shown in Figure 3.1-6. The turbofan cruise engines are located in the nose of the vehicle to provide a favorable center of gravity for subsonic, horizontal flight. The on-orbit propellant is located as close to the rocket engines as possible to minimize trapped fluid and line losses. The forward interstage attach point is located at the orbiter gross weight center of gravity so that the stage separation is mainly translational with a minimum of rotation for the orbiter.

The electrical power equipment, batteries and fuel cells are located in the forward section to aid in locating the center of gravity as far forward as possible.

The payload actuation mechanism is located in an unpressurized area. This mechanism can be used to rotate the payload and extend it out over the front of the vehicle when docking is required for the mission.

The equipment located in the pressurized area aft of the crew is normally used by the crew during the mission.

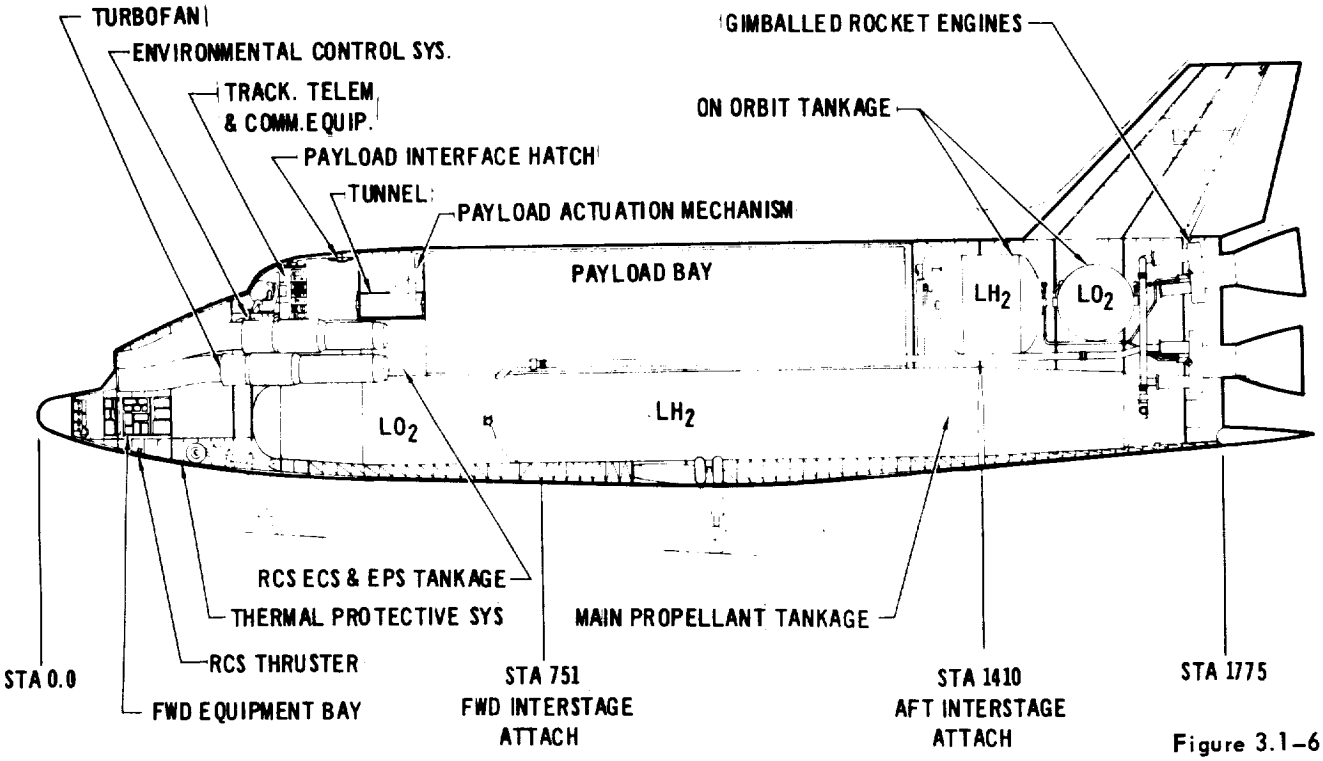

Figure 3.1-6

3.1.2.4 Subsystem Arrangement - Figure 3.1-7 shows the design approach for subsystem integration with emphasis given to location of equipment in a forward equipment bay, installation of environmental control system adjacent to cabin, provision of guidance and navigation system on a "common base" to expedite alignment and checkout, and proximity of in-flight equipment for rapid crew access and control. This approach enhances reliability, alleviates maintenance problems, and provides c.g. control.

3.1.2.5 Personnel Provisions - Figure 3.1-8 shows ingress/egress features for the two man flight crew. IVA crew transfer is possible by two (2) routes: either through the payload tunnel, or through the payload interface hatch. EVA can be accomplished through the payload interface hatch. Ingress/egress after launch mating will be done via the payload interface hatch while post landing and ferry operation ingress/egress is realized through the lower hatch and nose gear area.

SUBSYSTEM ARRANGEMENT – ORBITER

- EQUIPMENT STOWED IN FORWARD SECTION TO AID IN C.G. CONTROL
- PROXIMITY TO COCKPIT PERMITS IN FLIGHT ACCESS TO CERTAIN SYSTEMS
- PROXIMITY TO COCKPIT SIMPLIFIES ENVIRONMENTAL CONTROL OF SENSITIVE COMPONENTS

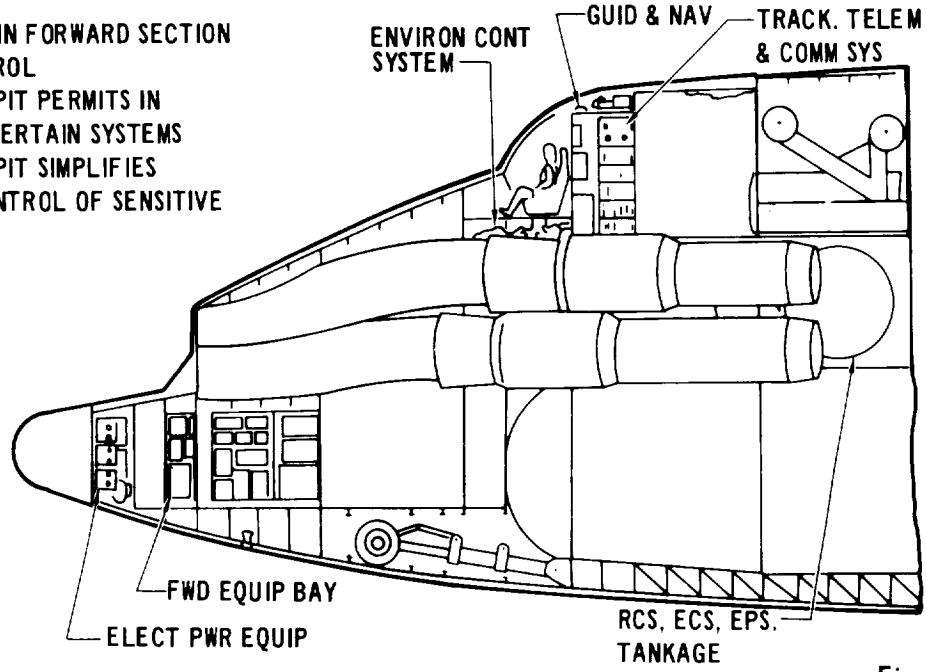

Figure 3.1–7

PERSONNEL PROVISIONS

- TOP HATCH USED AFTER LAUNCH MATING WITH BOOSTER
- LOWER HATCH USED FOR POST LANDING EGRESS & FERRY OPERATION

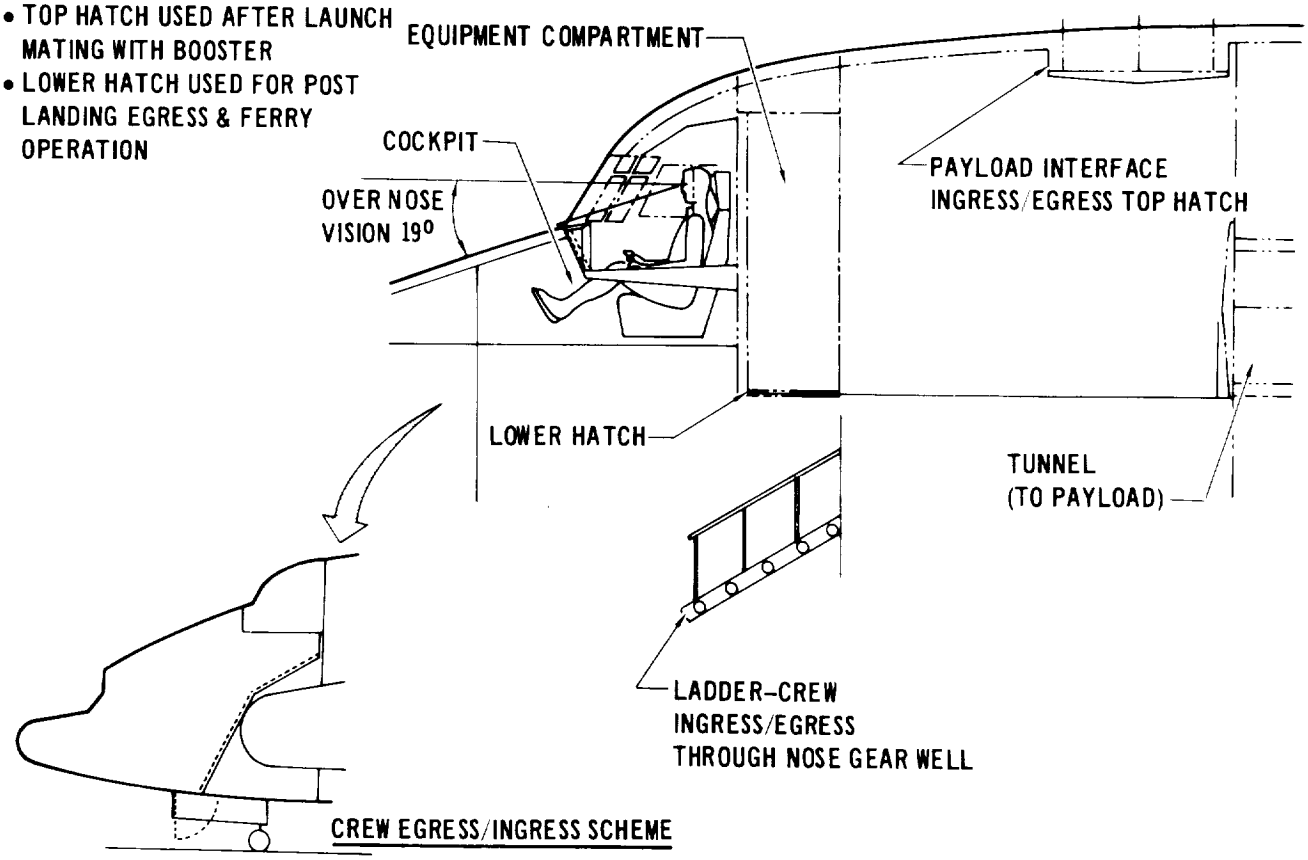

Figure 3.1–8

3.1.2.6 Interstage Connection - The mated configuration employs a statically determinate, three point interstage connection consisting of one forward point and two aft points plus a pin to react side loads which is located between the two aft points. Refer to Figure 3.1-9.

INTERSTAGE CONNECTORS – SEPARATION

- STATICALLY DETERMINATE INTERSTAGE CONNECTION
  - FWD POINT: REACTS DRAG, VERTICAL & SIDE LOADS & SEPARATES VEHICLES.
  - AFT CONNECTORS: REACTS VERTICAL LOADS AT TWO CONNECTOR LINKS. SHEAR PIN REACTS AFT SIDE LOADS.
- CONNECTION ADVANTAGES:
  - ALLOWS MISALIGNMENT BETWEEN FWD & AFT POINTS.
  - ALLOWS FOR THERMO EXPANSION BETWEEN VEHICLES.
- PYROACTUATION FOR UNLOCKING AND SEPARATION ENERGY
- AFT CONNECTOR LINKS RETRACT INTO FAIRING ON BOOSTER AFTER SEPARATION.
- MINIMUM INTERRUPTION OF ORBITER TPS
- SEPARATION THRUST AT ORBITER c.g.

INTERSTAGE CHARACTERISTICS

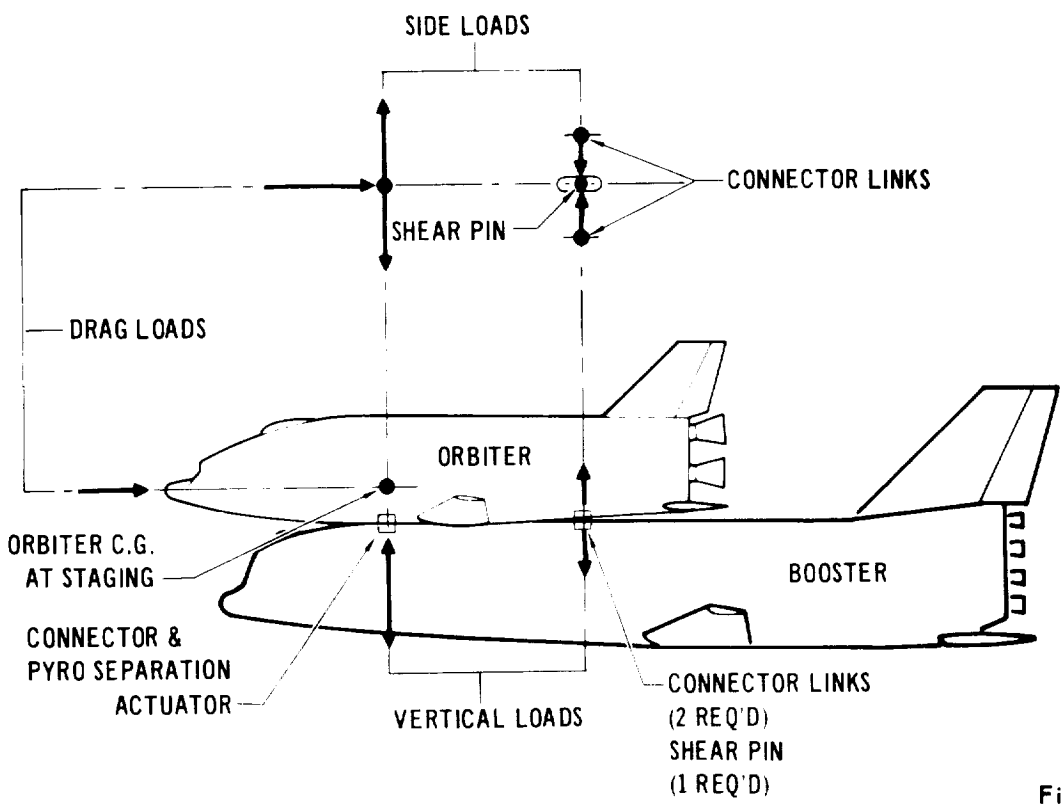

Figure 3.1-9

At the forward point is a rigid connection that has a pyroactuation feature which provides energy for unlocking and vehicle separation. The two aft points have tension/compression links which are free to rotate fore and aft as required for vehicle tolerances and/or thermo expansion or contraction. The aft links contain a latching device, at their orbiter interface end, which is unlatched via pyroactuation prior to energizing of the forward connection for vehicle separation. The shear pin has lateral capability only and converts lateral shear loads into axial loads in the aft links. All operational components of the system are mounted on the booster permitting a minimum interruption of orbiter lower surface TPS.

3.1.2.7 Payload Integration - The stowed centroid of the 15 ft diameter X 60 ft payload volume is located at the fore and aft vehicle landing condition c.g. The payload is housed beneath clamshell doors, that are non-structural as related to vehicle primary loads, and is secured for flight with mounting rail type locking mechanisms located along both sides of the vehicle adjacent to the longerons which support the clamshell door hinges. The clamshell doors are operated about their hinge by electro-mechanical actuators and are pulled up and secured along the vehicle top centerline by mechanical latches.

On mission access to a stowed payload or the payload bay is provided by a tunnel (with hatch) extending from the cockpit area through the payload adapter. Refer to Figure 3.1-10, 3.1-11 and 3.1-12.

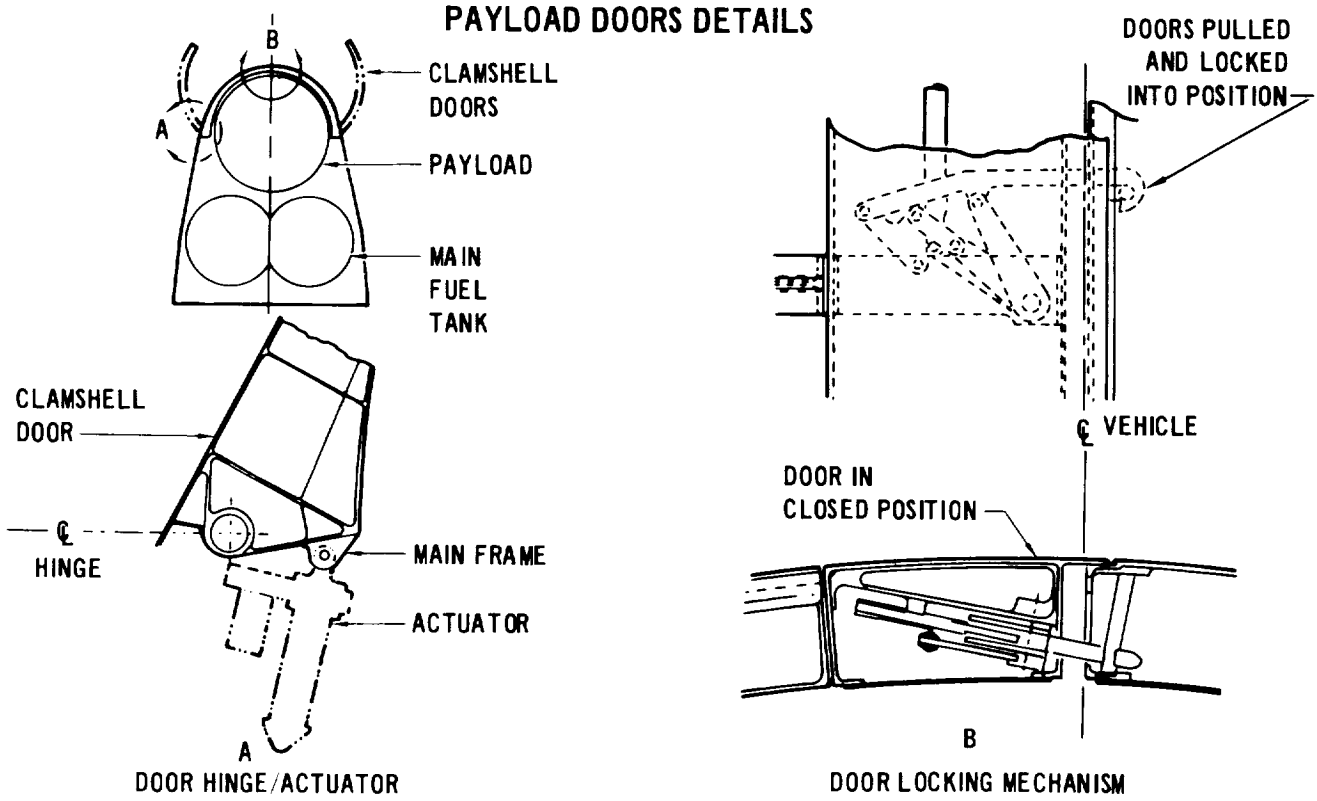

Figure 3.1-10

PAYLOAD MOUNTING RAIL LOCKING MECHANISM DETAILS

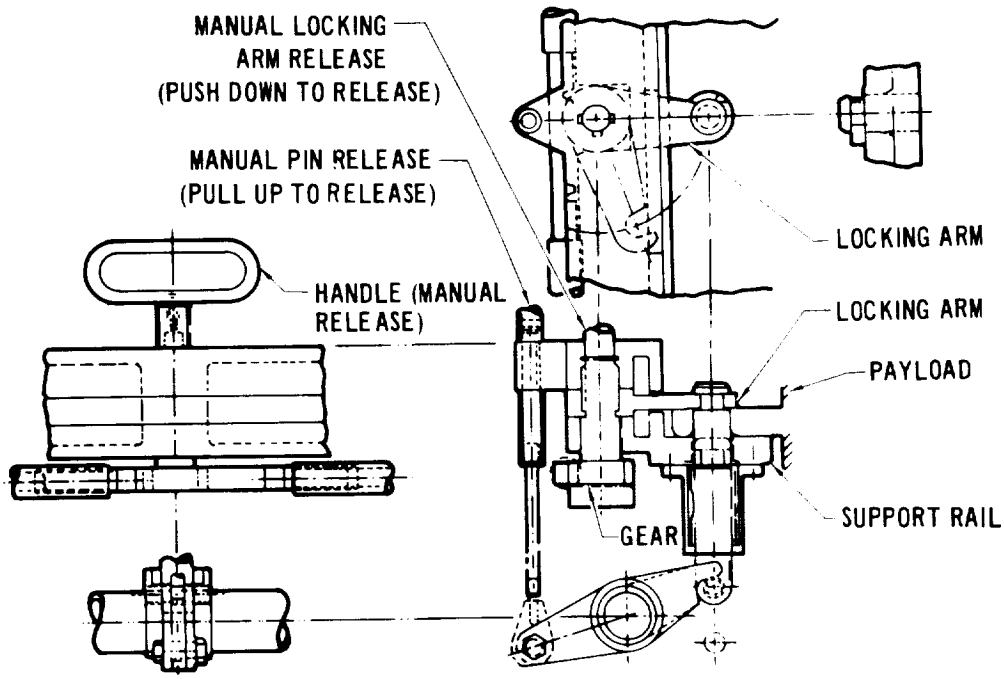

Figure 3.1-11

3.1.2.8 Payload Deployment - With the clamshell doors open the payload can be deployed directly from the payload bay or it can be electro-mechanically extended on a payload adapter to any selected position from stowed to a forward position over the vehicle nose. These operations can also be reversed.

3.1.2.9 Docking Provisions - Refer to Figure 3.1-12. In the case of a payload or payload container which might have a docking interface installed, the clamshell doors are opened and the payload extended to the forward position. Docking is then accomplished with the payload extension mechanism providing energy absorption. After docking, the ingress-egress hatch located in the vehicle top of the cabin area can be rigidized to the payload or payload container to permit personnel transfer to another vehicle or station. With the payload in the forward extended position the clamshell doors are closed. The vehicle can be separated from a deployed payload by mechanically releasing the payload adapter from the payload in which case the adapter can be retracted into the vehicle and clamshell doors closed. All of these operations are reversible.

DOCKING PROVISIONS

- DOCKING VISIBLE TO PILOT
- ACCESS TO PAYLOAD MODULE IN STOWED AND EXTENDED POSITIONS
- EXTENSION MECHANISM PROVIDES ENERGY ABSORPTION FOR DOCKING
- CLAMSHELL DOORS CLOSE WITH PAYLOAD MODULE EXTENDED

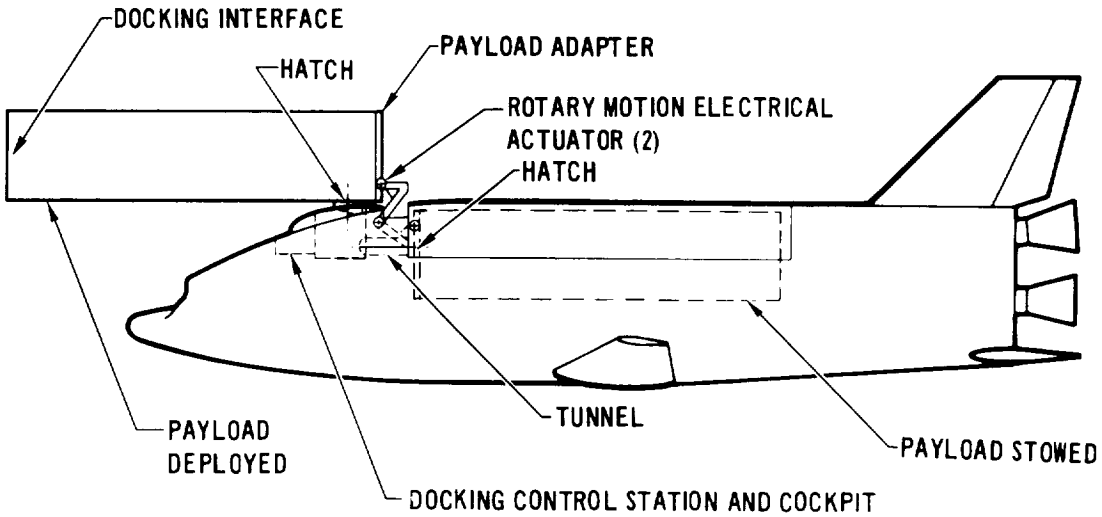

Figure 3.1-12

3.1.2.10 Fuselage Shingle Installation - A typical installation is shown in Figure 3.1-13. Shingle assemblies approximately 20 inches wide and of one piece length are installed both over the fuselage lower surface and partially up the fuselage lower sides. A shingle assembly consists of a silica HCF panel bonded to a phenolic honeycomb panel. The shingles are held to a shingle support frame by retainer assemblies consisting of silica HCF strips bonded to titanium Pi sections. The Pi section protrudes between and overlaps the phenolic honeycomb panels while the silica HCF strip falls flush with the shingle outer ML. Mounting fasteners are installed through holes in the silica HCF strips which hold the Pi section hard against the support frame. Silica HCF plugs are installed to insulate the fasteners. Gaps are provided between the phenolic honeycomb panels and the Pi section legs to allow for differential movement between the shingles and support frames due to thermo expansion or contraction.

TYPICAL FUSELAGE SHINGLE INSTALLATION

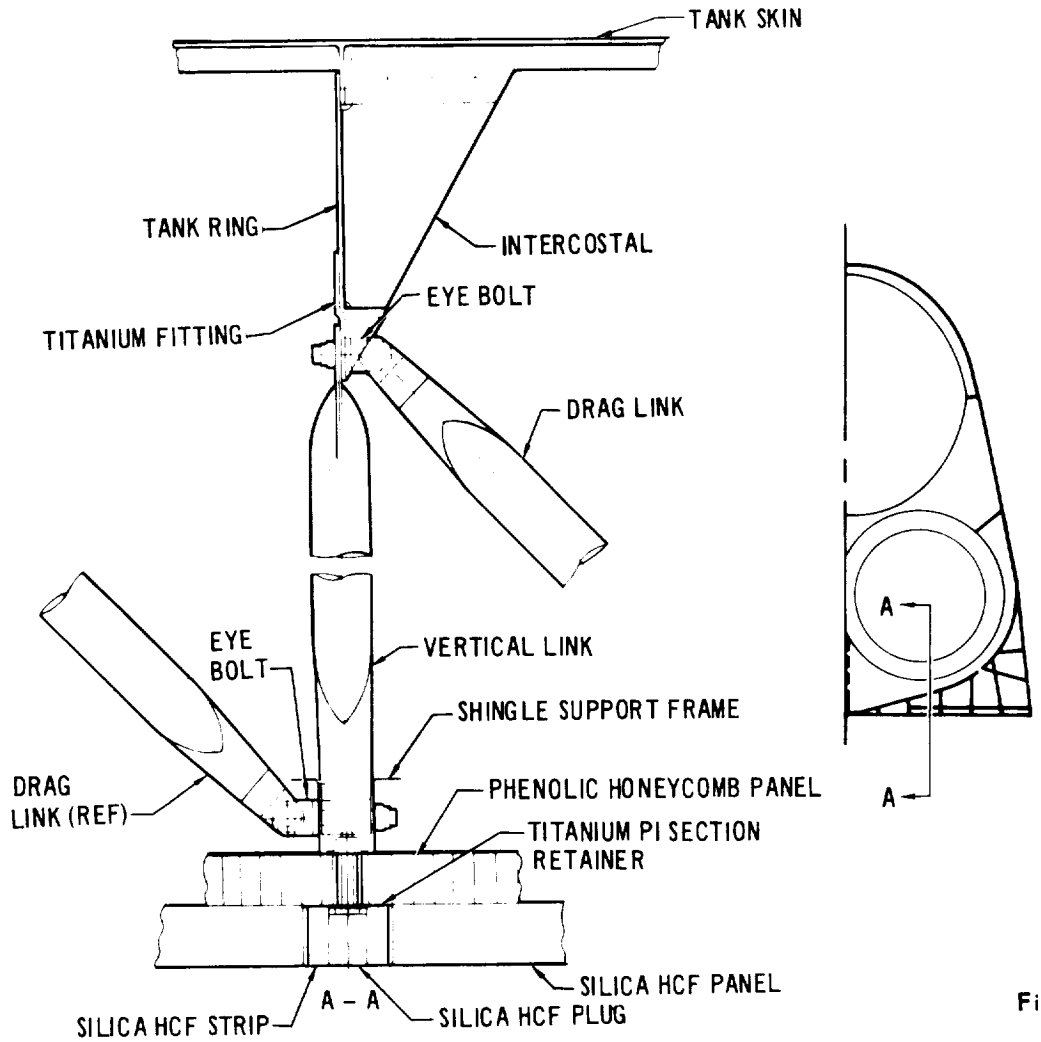

Figure 3.1-13

3.1.2.11 Leading Edge Construction - The interference region of the wing leading edge is designed for periodic replacement of its thermo protection system. Carbon-carbon laminate panels with integral mounting bosses are provided for this purpose. Looking at a cross section of the leading edge the panels extend from above the chord plane back to the 15% spar on the lower side of the leading edge. In a spanwise direction the panels are divided to provide for local replacement. Carbon-carbon laminate support assemblies of the same design as the panels are used to support the panels along each chordwise splice. As installed the bosses extend through zirconia insulation blankets and through to the inner surface of the carbon-carbon honeycomb leading edge structure where mounting fasteners are installed. Zirconia plugs are installed flush into the hollow bosses to insulate the fasteners. Refer to Figure 3.1-14.

LEADING EDGE CONSTRUCTION

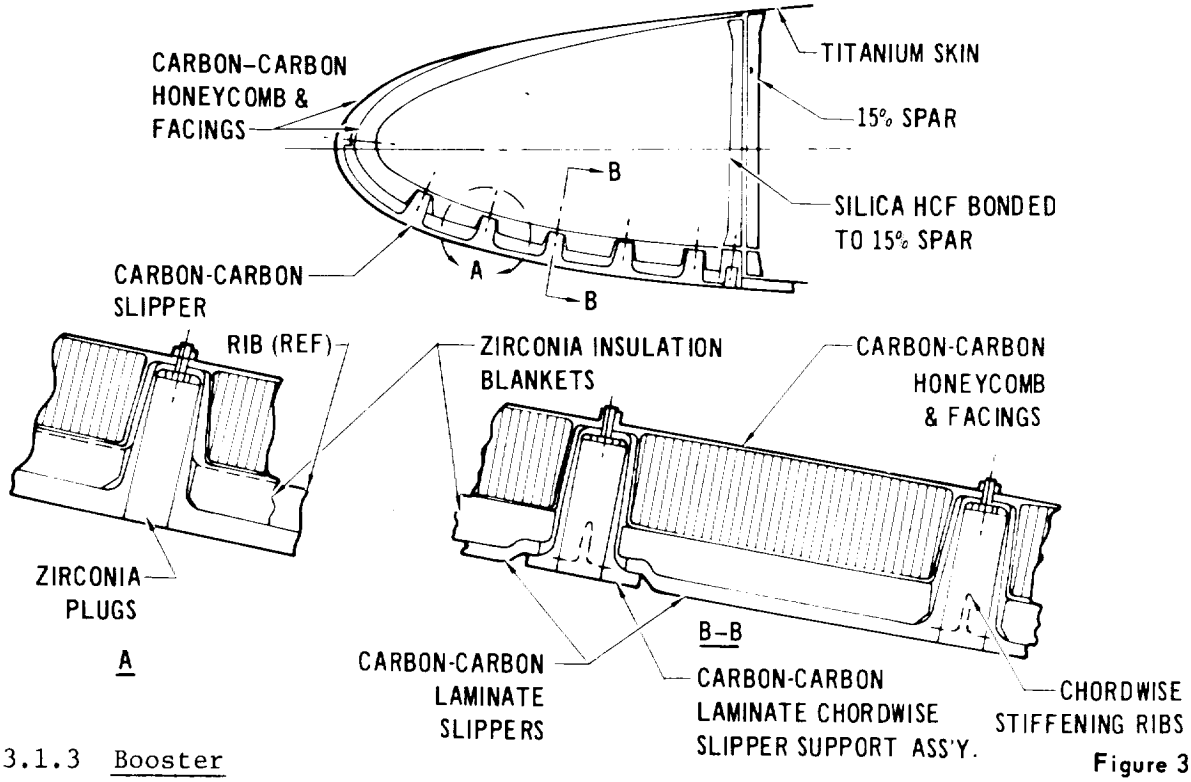

Figure 3.1-14

3.1.3 Booster

3.1.3.1 Configuration Description - The booster is a fixed wing reusable vehicle which is capable of both manned and unmanned operations. The general arrangement and geometric data is shown in Figure 3.1-15 and 3.1-16.

GENERAL ARRANGEMENT - BOOSTER

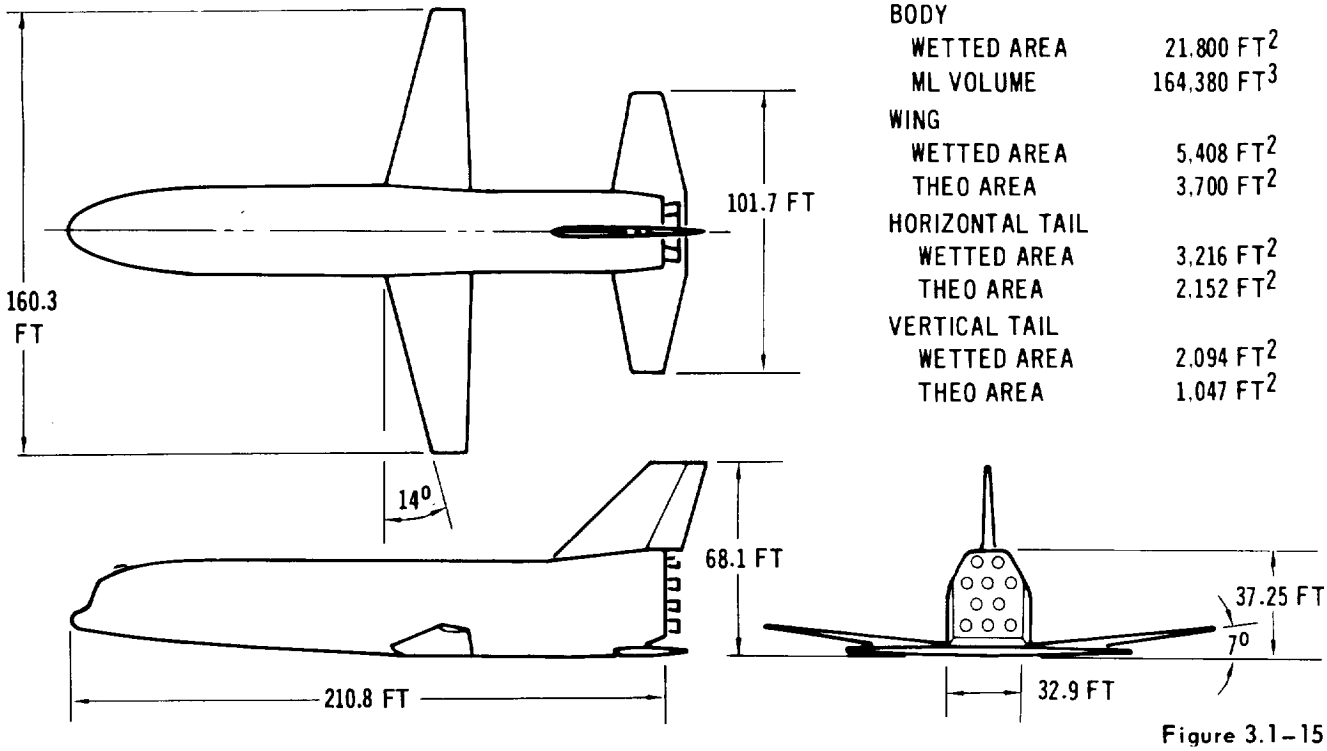

BODY	
WETTED AREA	21,800 FT^2
ML VOLUME	164,380 FT^3
WING	
WETTED AREA	5,408 FT^2
THEO AREA	3,700 FT^2
HORIZONTAL TAIL	
WETTED AREA	3,216 FT^2
THEO AREA	2,152 FT^2
VERTICAL TAIL	
WETTED AREA	2,094 FT^2
THEO AREA	1,047 FT^2

Figure 3.1-15

GEOMETRIC DATA - BOOSTER

Vehicle Weights	
Gross Weight	2,251,910 lb.
Entry Weight	414,730 lb.
Landing Weight	317,310 lb.
Vehicle Geometry	
Total Projected Planform Area	10,152 ft^2
Body Geometry	
Wetted Area	21,800 ft^2
ML Volume	164,380 ft^3
Length	211 ft
Bottom Wetted Area	5,840 ft^2
Wing Geometry	
Wetted Area	5,408 ft^2
Theoretical Area	3,700 ft^2
Exposed Area	2,704 ft^2
Span (b)	160 ft
Aspect Ratio (AR)	6.92:1
Dihedral Angle	7°
L. E. Sweep	14°
Taper Ratio	.353:1
M.A.C. ($\bar{c}$)	24.8 ft
Root Chord (C_R)	34 ft
Tip Chord (C_T)	12 ft
Airfoil Section at Root (body ℄)	NACA 0014-64
Airfoil Section at Tip	NACA 0010-64
Flaps, Double Slotted	30% C X 60% b exposed
Flaps Movement Max	55°
Ailerons	25% C X 30% b exposed
Ailerons Deflection	± 20°
Horizontal Tail Geometry	
Wetted Area	3,216 ft^2
Theoretical Area	2,152 ft^2
Exposed Area	1,608 ft^2
Span (b)	101.6 ft
Aspect Ratio (AR)	4.8:1
L. E. Sweep	10°
Taper Ratio	.397:1
Root Chord (C_R)	28.6 ft
Tip Chord (C_T)	11.34 ft
M.A.C. ($\bar{c}$)	22.5 ft
Airfoil Section	NACA 0012-64
Elevator	56% C X b
Elevator Deflection	± 40°
Vertical Tail Geometry	
Wetted Area	2,094 ft^2
Theoretical Area	1,047 ft^2
Exposed Area	1,047 ft^2
Span (b)	30 ft
Aspect Ratio (AR)	.9:1
L. E. Sweep	45°
Taper Ratio	.462:1
Root Chord (C_R)	43.3 ft
Tip Chord (C_T)	20 ft
M.A.C. ($\bar{c}$)	32.7 ft
Airfoil Section	NACA 0012-64
Rudder	30% C X b
Rudder Deflection	± 25°

Figure 3.1-16

3.1.3.2 Design Features - The booster is powered by ten (10) rocket engines during ascent. Six (6) cruise engines are provided to permit the booster to fly back to the launch site after separation from the orbiter. Controls for the subsonic landing approach and cruise consist of conventional ailerons, elevators, rudder and double slotted flaps. The RCS system provides attitude orientation throughout the hypersonic entry. Figure 3.1-17 shows the arrangement of key features of the booster. The booster is equipped with a conventional retractable tricycle landing gear.

IN-BOARD PROFILE – BOOSTER

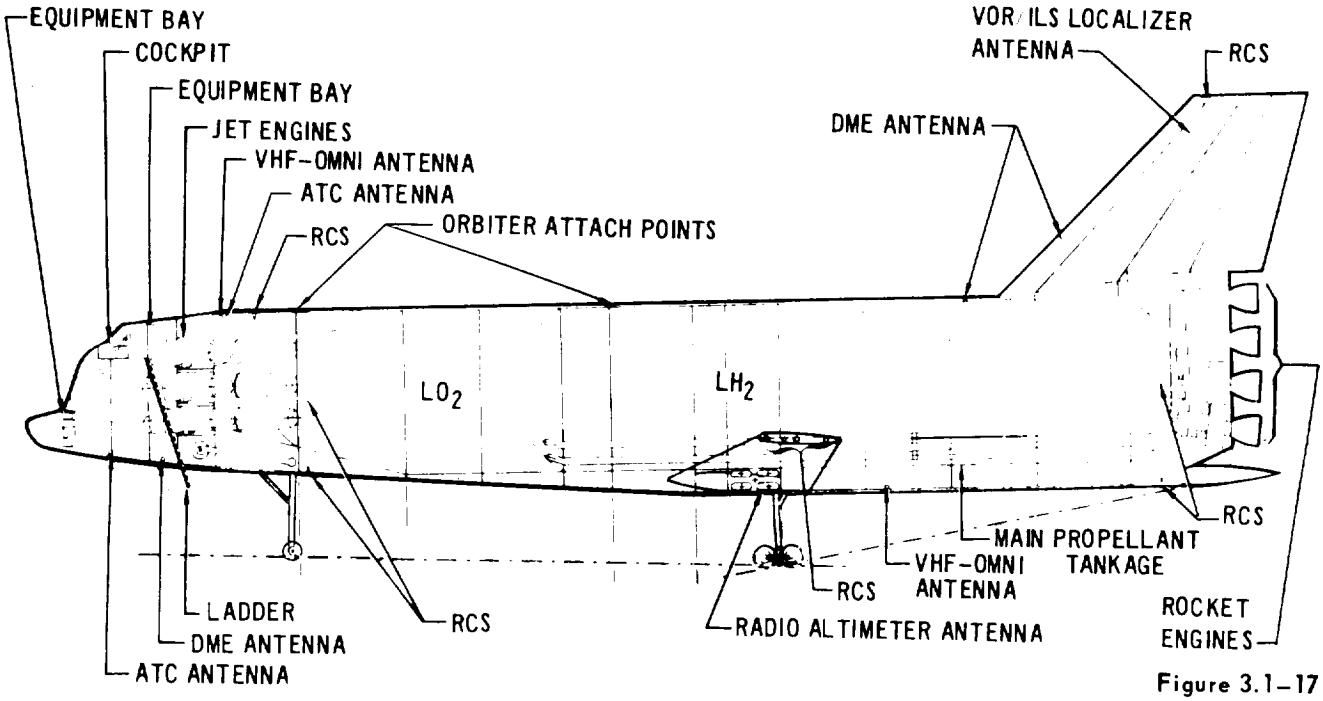

Figure 3.1-17

3.1.4 Landing System-General - A conventional aircraft type landing gear design is employed on both the orbiter and booster. Designs meet operational and braking requirements for a runway length of 8000 ft.

Tire sizing is compatible with HIAD medium load pavement with overload factor up to 1.5 (250 psi max. pressure).

Lift spoilers will probably be required for wet weather ground control.

3.1.4.1 Orbiter Landing System - The orbiter landing system is designed for the primary mission (return from orbit) touchdown operational phase. Refer to Figure 3.1-18 and 3.1-19. The gear is designed for the following conditions:

Landing Weight	with payload	158,840 lbs
Landing Weight	without payload	133,840 lbs
Sink Rate	10 fps	

A drag chute is provided for wet runway conditions.

Main Gear

Max Load/Strut - 213,000 lbs ult. (vertical)

Wheel & Tire Size -	40 X 17.5 - 18 Type VIII Dual
Tire Pressure	217 psi
Strut Stroke -	16.0 in
Brake Heat Sink Material	Non-Structural Beryllium

Anti-Skid is required

Deployment Mechanism - Hydraulic

Nose Gear

Max Load	69,000 lbs ult. (Vertical)
Wheel & Tire Size	26 x 8.0 - 14 Type VIII Dual
Tire Pressure	217 psi
Strut Stroke	16.0 in

Nose Wheel Steering is required

Deployment Mechanism - Hydraulic

LANDING SYSTEM INSTALLATION – ORBITER

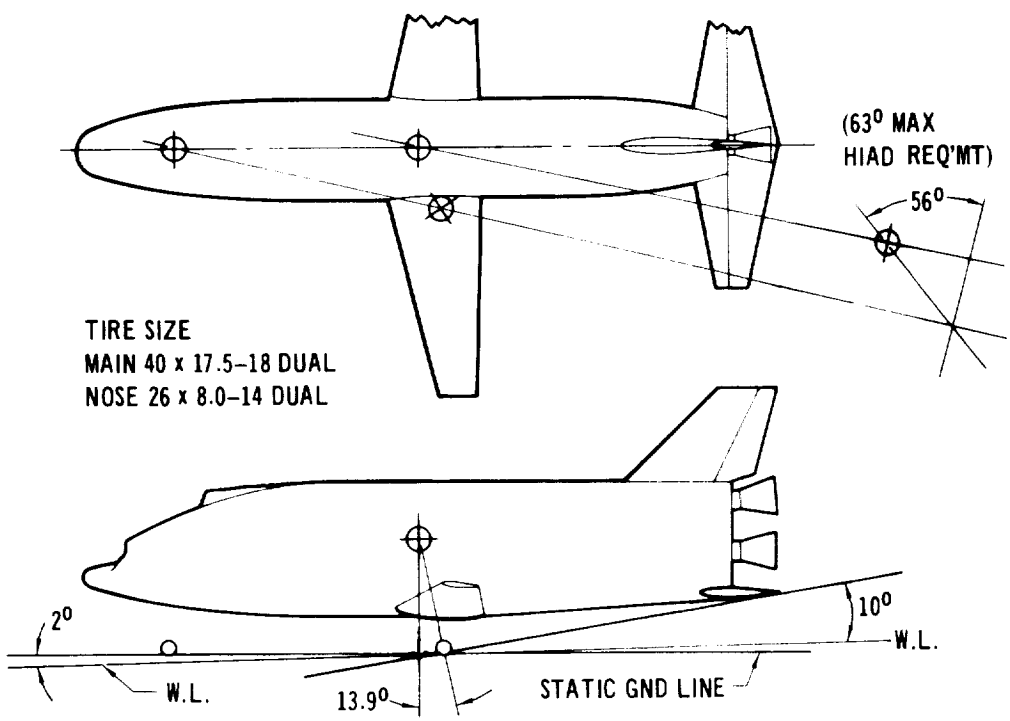

Figure 3.1–18

MAIN LANDING GEAR – ORBITER

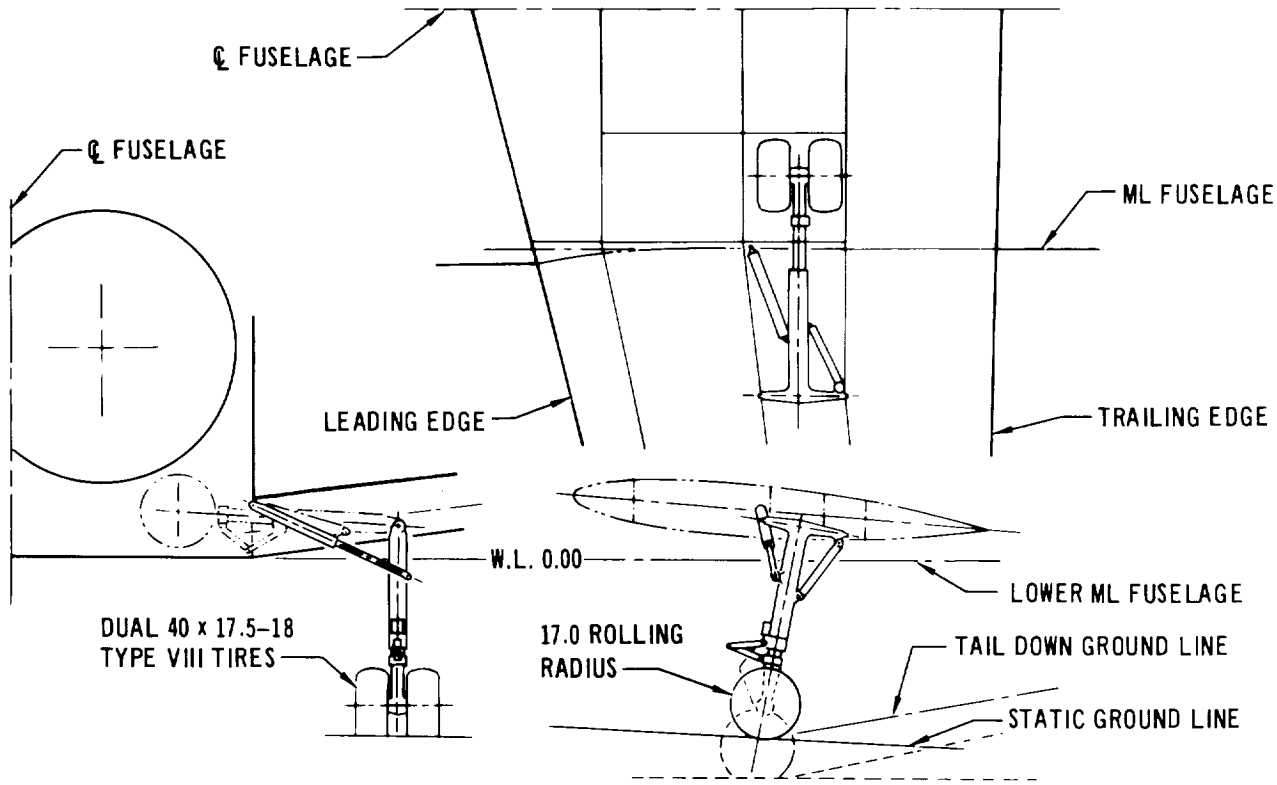

Figure 3.1–19

3.1.4.2 Booster Landing System - Refer to Figures 3.1-20 and 3.1-21. The booster landing system is designed for landing conditions resulting from a sub-orbital trajectory return. The gear is designed for the following conditions:

Landing Weight - 317,310 lbs

Sink Rate - 10 fps

A drag chute is provided for wet runway conditions.

Main Gear

- Max Load/Strut - 429,000 lbs ult. (Vertical)
- Wheel & Tire Size - 44 X 13.0 - 20 Type VII Dual Tandem
- Tire Pressure - 215 psi
- Strut Stroke - 16.0 in.
- Brake Heat Sink Material - Non-Structural Beryllium
- Anti-Skid is required
- Deployment Mechanism - Hydraulic

Nose Gear

- Max Load - 138,500 lbs ult. (Vertical)
- Wheel & Tire Size - 36 X 11 - 16.0 Type VII Duals
- Tire Pressure - 205 psi
- Strut Stroke - 16.0 in.
- Nose Wheel Steering is required
- Deployment Mechanism - Hydraulic

LANDING SYSTEM INSTALLATION – BOOSTER

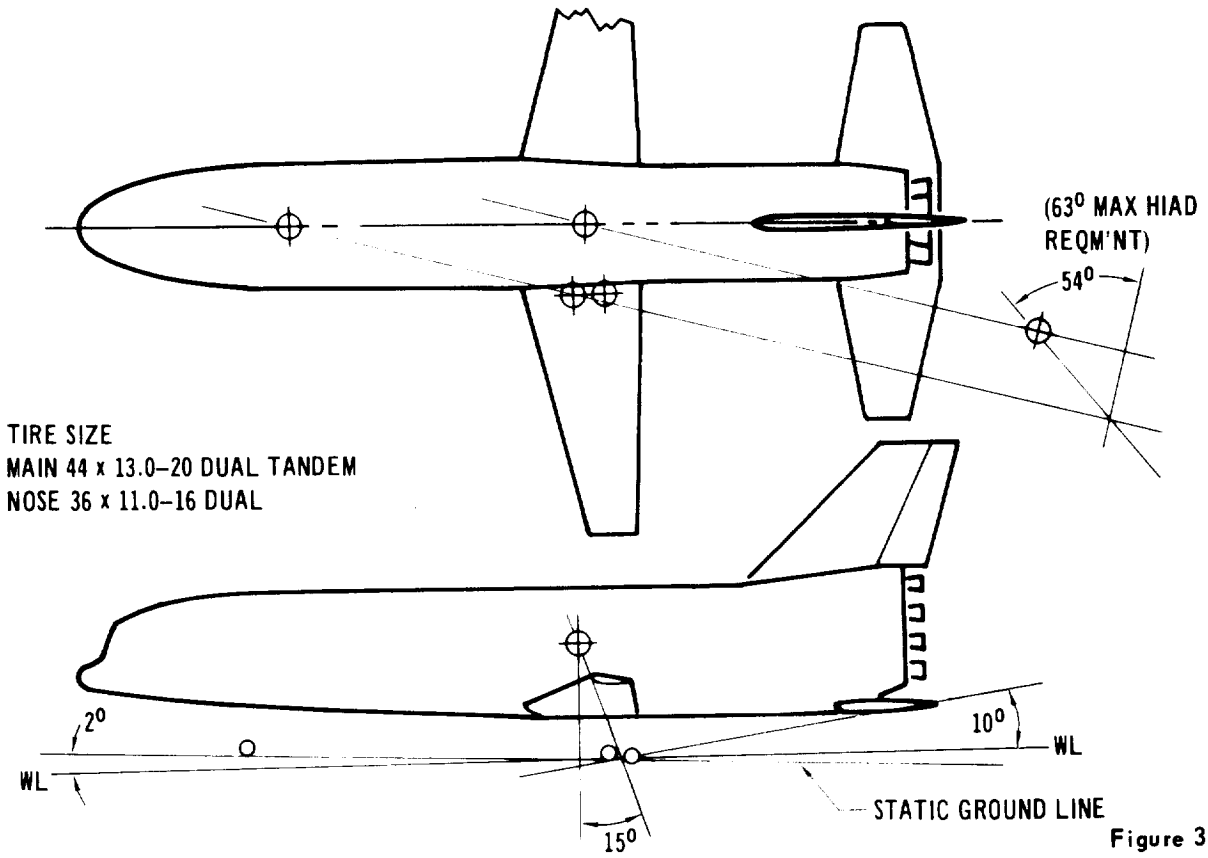

Figure 3.1–20

LANDING GEAR – BOOSTER

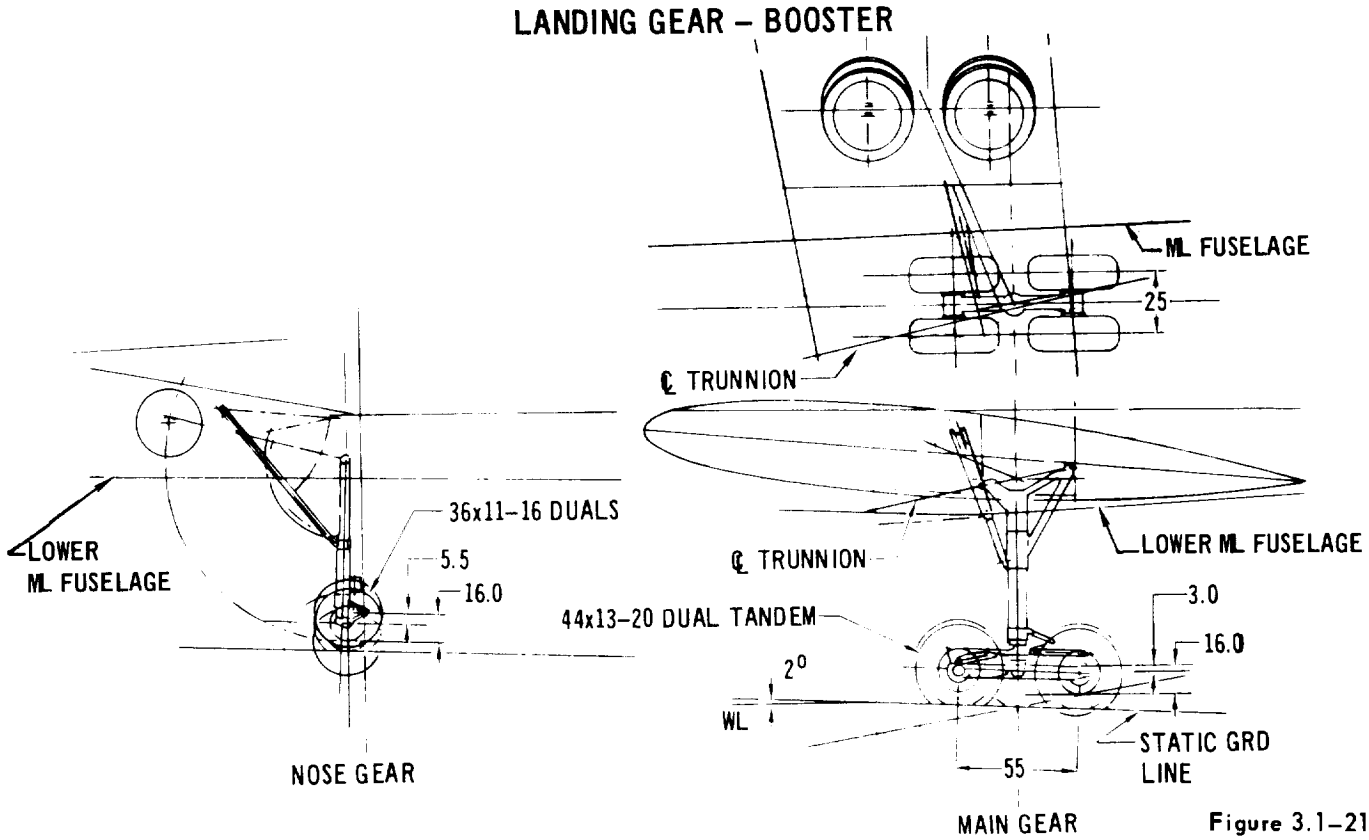

Figure 3.1–21

3.2 Structural Design - Orbiter/Booster structures are described and bases of the designs are given in this section. Weight optimization is primary in design conception and choice of materials. Criteria and design loads are given, and analyses are presented. Criteria were coordinated with the NASA MSC Shuttle group. Other available data were utilized where applicable to the point design presented herein. The basic design philosophy includes the following: Fiscal year 1972, "state-of-art" technology, the employment of conventional design concepts, and the utilization of elements of structure in multiple functions.

3.2.1 Description of Structures - The system is a two stage vehicle with the second stage (orbiter) being supported from the first stage (booster) during launch and ascent. A statically determinant attach arrangement for mating the vehicles is shown in Figure 3.2-1. The forward attachment is also the separation actuator located in the plane of orbiter c.g. This strong point carries all drag load plus normal and lateral loads between vehicles. Lateral loads only are transmitted by the aft C_L pin. All other loads are carried by the two aft links.

3.2.1.1 Orbiter Fuselage - Primary structures are shown in Figures 3.2-2 and 3.2-3. Basic body bending/shear structure is made up of upper longerons adjacent to the payload compartment and the propellant tank structures below the payload joined by fuselage side skin panels. Two integrally stiffened cylindrical tank shells are joined at a common keel web in a "double bubble" arrangement. Side panels are single skin, stiffened by corrugations. These panels and payload doors are the upper surface of the fuselage. Tank shell structure is aluminum for compatibility with propellants and protected by moldline Thermal Protection System (TPS) shingles. Shell stiffening frames spaced at 20 inch intervals also support the TPS, upper side panels and longerons. Frames are titanium to minimize heat conductance to the tanks. The upper structures are warm during launch and entry, and also are titanium for good strength/weight ratio at elevated temperatures.

The forward fuselage structural shell is titanium single skin stiffened by corrugations and frames, and forms the M.L. except where non-structural surfaces exist, such as engine and nose landing gear doors. Intercostals and frames are transition structures between the forward fuselage and the propellant tank as illustrated in Figure 3.2-4.

Surface TPS is radiation cooled. The heat protection structures are also shown in Figure 3.2-2. Insulation (silica HCF) is bonded directly to the forward fuselage shell surface aft to the propellant tanks. In the main body area twenty inch long HCF shingle panels form the bottom and the sides up to approximately six

INTER-STAGE CONNECTORS – SEPARATION

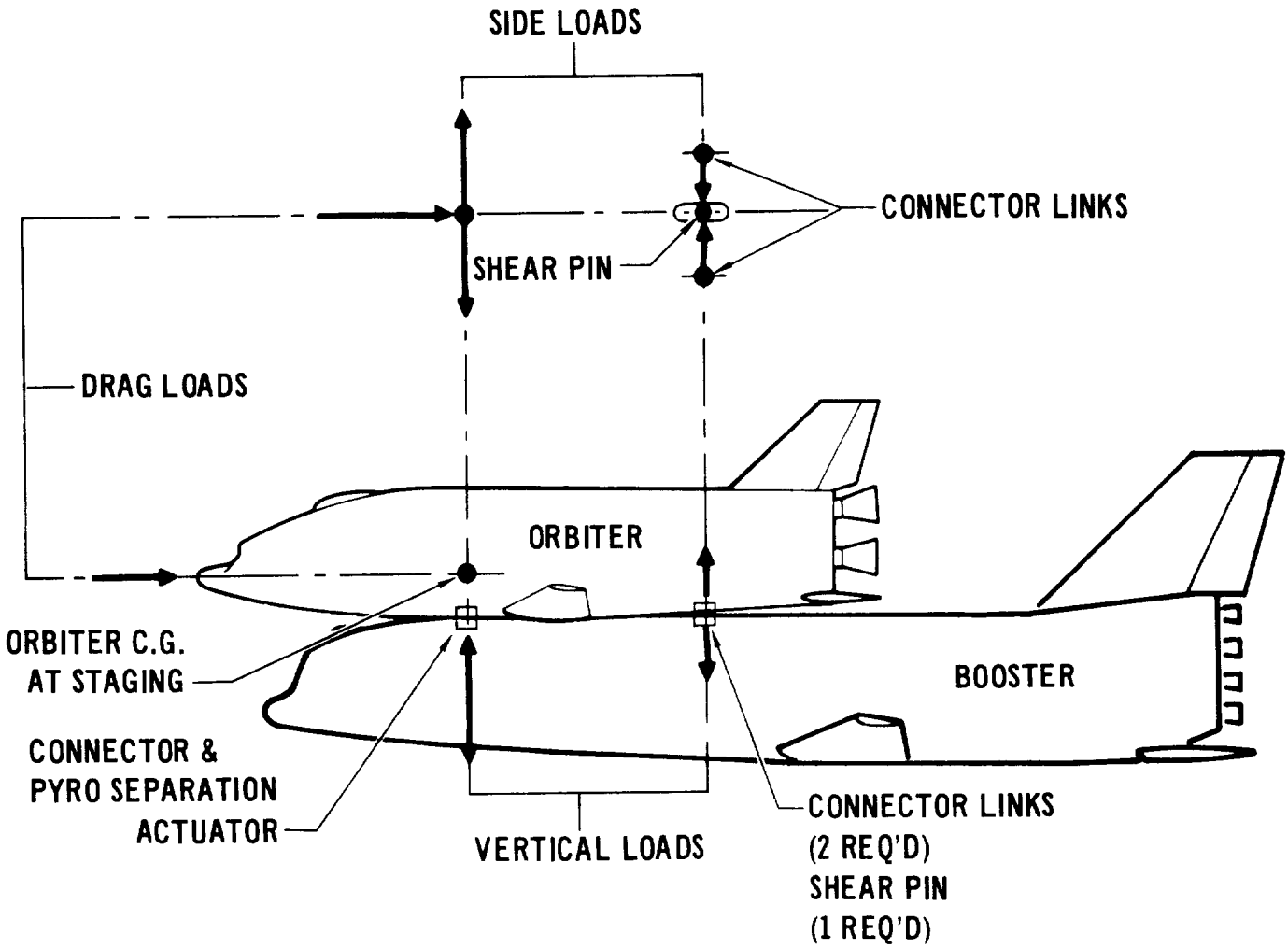

Figure 3.2–1

STRUCTURAL ARRANGEMENT – ORBITER

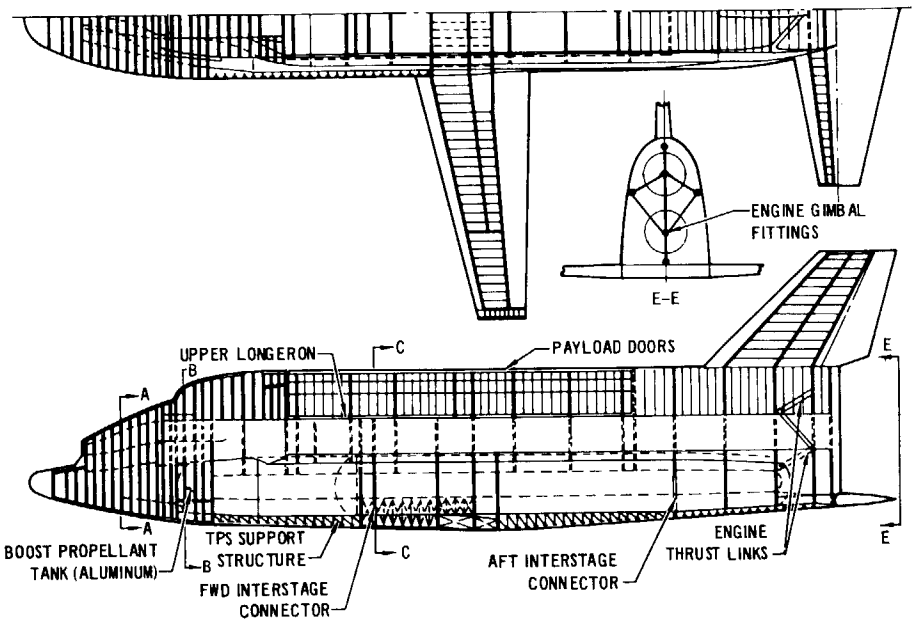

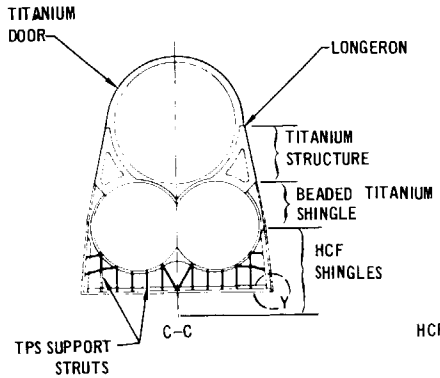

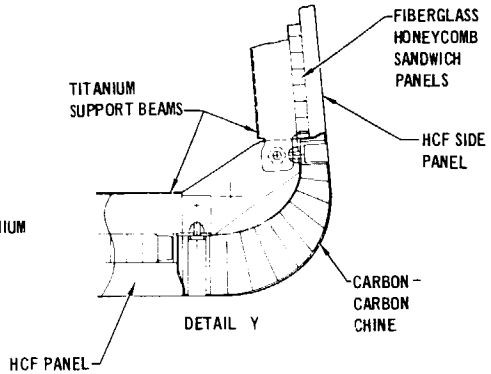

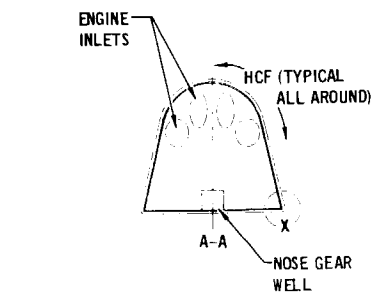

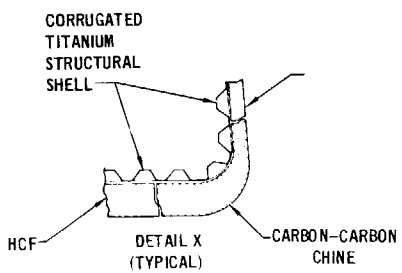

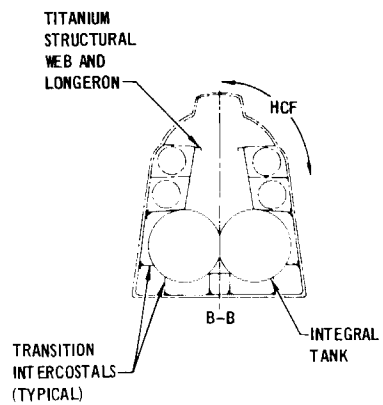

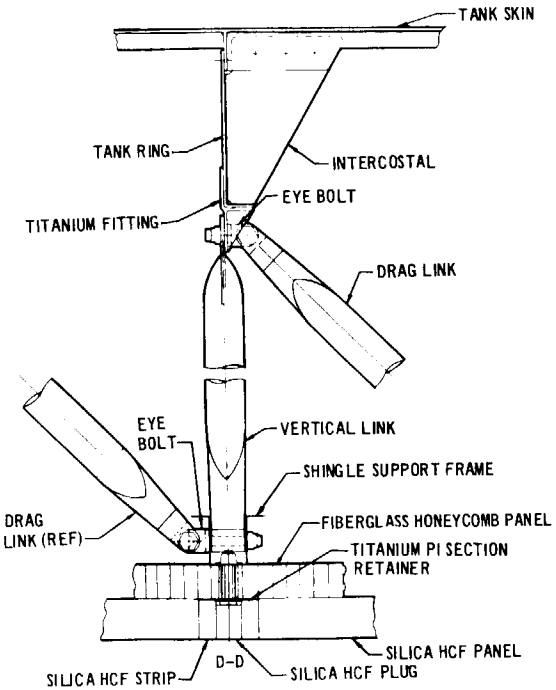

Figure 3.2-2

FOLDOUT FRAME

FOLDOUT FRAME

PRIMARY STRUCTURE – ORBITER

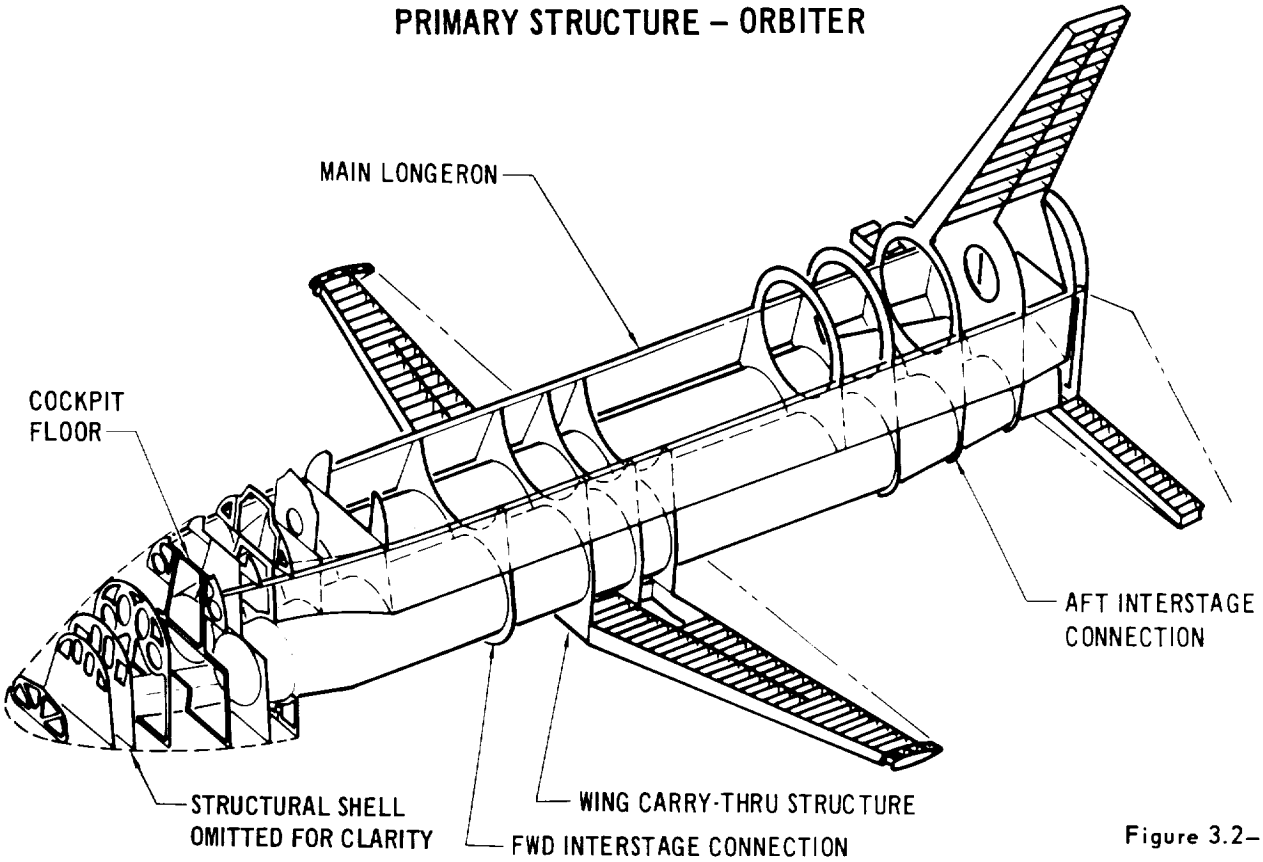

Figure 3.2–3

FORWARD FUSELAGE/CENTER FUSELAGE LOAD DISTRIBUTION – ORBITER

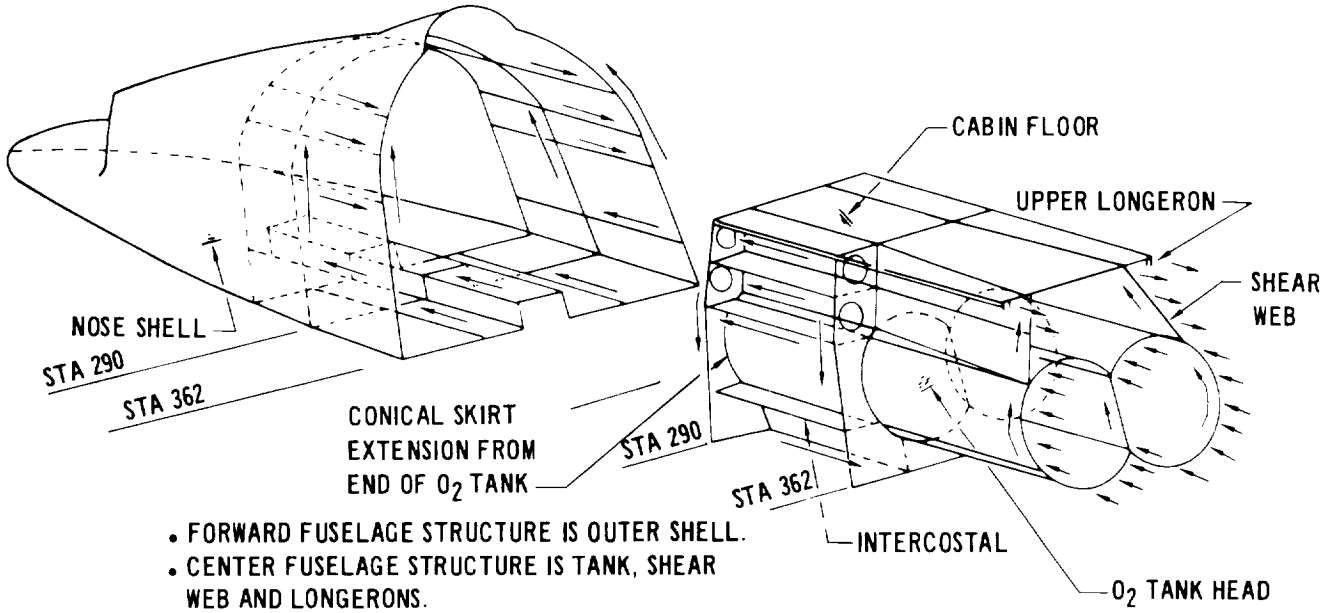

- FORWARD FUSELAGE STRUCTURE IS OUTER SHELL.
- CENTER FUSELAGE STRUCTURE IS TANK, SHEAR WEB AND LONGERONS.
- LOADS BETWEEN THE CENTER AND FORWARD FUSELAGE ARE REDISTRIBUTED BY 12 INTERCOSTALS AND BULKHEADS AT STATIONS 290 AND 362.

Figure 3.2–4

feet above the chine lines. Single thickness beaded titanium panels form the surface between the HCF shingles and fuselage structural side skins. HCF is bonded to fiberglass honeycomb panels which distribute surface pressure loads to small lateral shingle support beams. The beams are attached to the tank shell stiffening frames by titanium links spaced at approximately 24 inches across the fuselage. Removable Pi shaped elements attached to the beams retain the shingles and provide a gap for thermal expansion.

Boost engines are supported by a tripod arrangement of linkage thrust structures for each engine. Linkage loads are transferred to the keel web, upper longerons and frames at stations 1635 and 1717. The frames also serve as main support elements for vertical and horizontal tails as illustrated in Figures 3.2-5 and 3.2-6.

Jet engines are supported on longitudinal intercostals attached to the forward fuselage shell and by bulkheads at stations 320, 362 and 400. The bulkheads also serve as primary structures supporting cabin pressurization and nose gear loads.

The wing is attached to the fuselage at three major frames in the plane of wing spars at stations 391, 972 and 1024, and to the keel web in the plane of the wing ℄ rib. Normal wing loads and symmetrical wing torque are supported at the frames and drag loads are supported at the keel web as shown in Figure 3.2-7.

ENGINE THRUST STRUCTURE – ORBITER

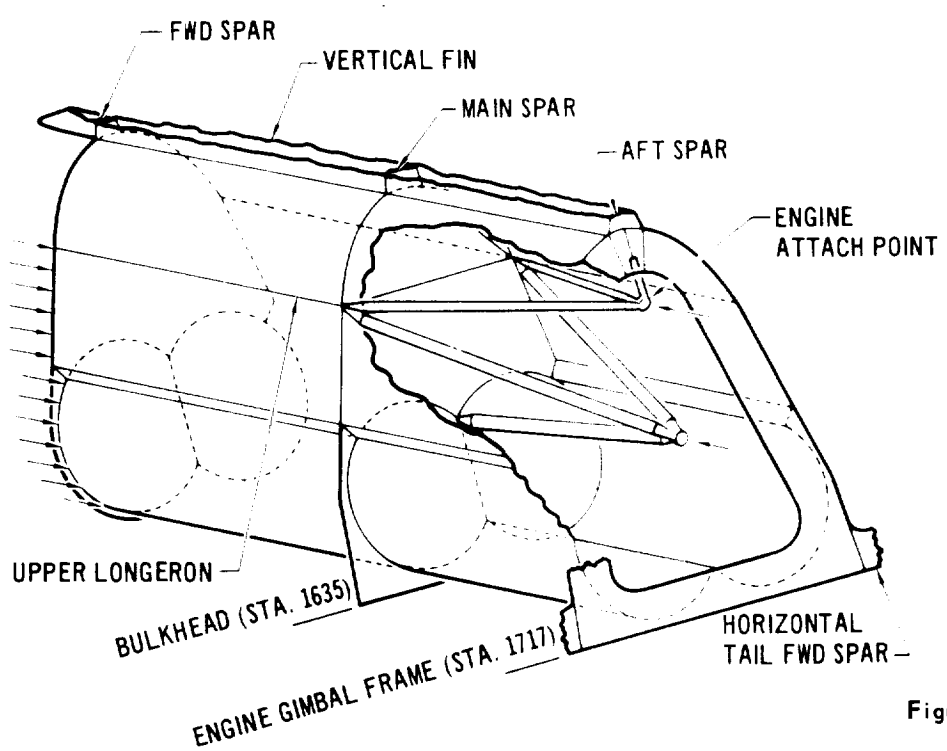

Figure 3.2-5

HORIZONTAL TAIL SUPPORT STRUCTURE – ORBITER

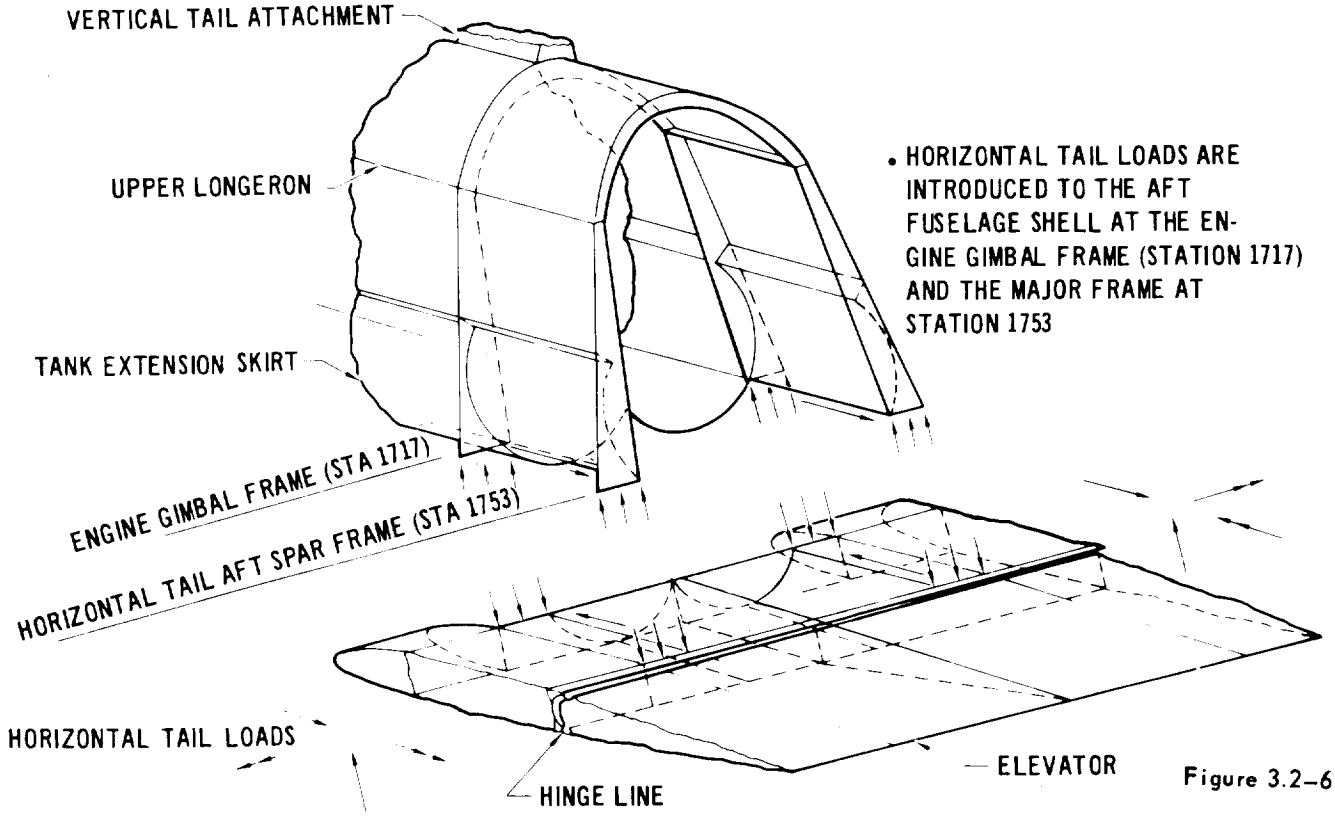

Figure 3.2–6

WING/FUSELAGE DISTRIBUTION – ORBITER

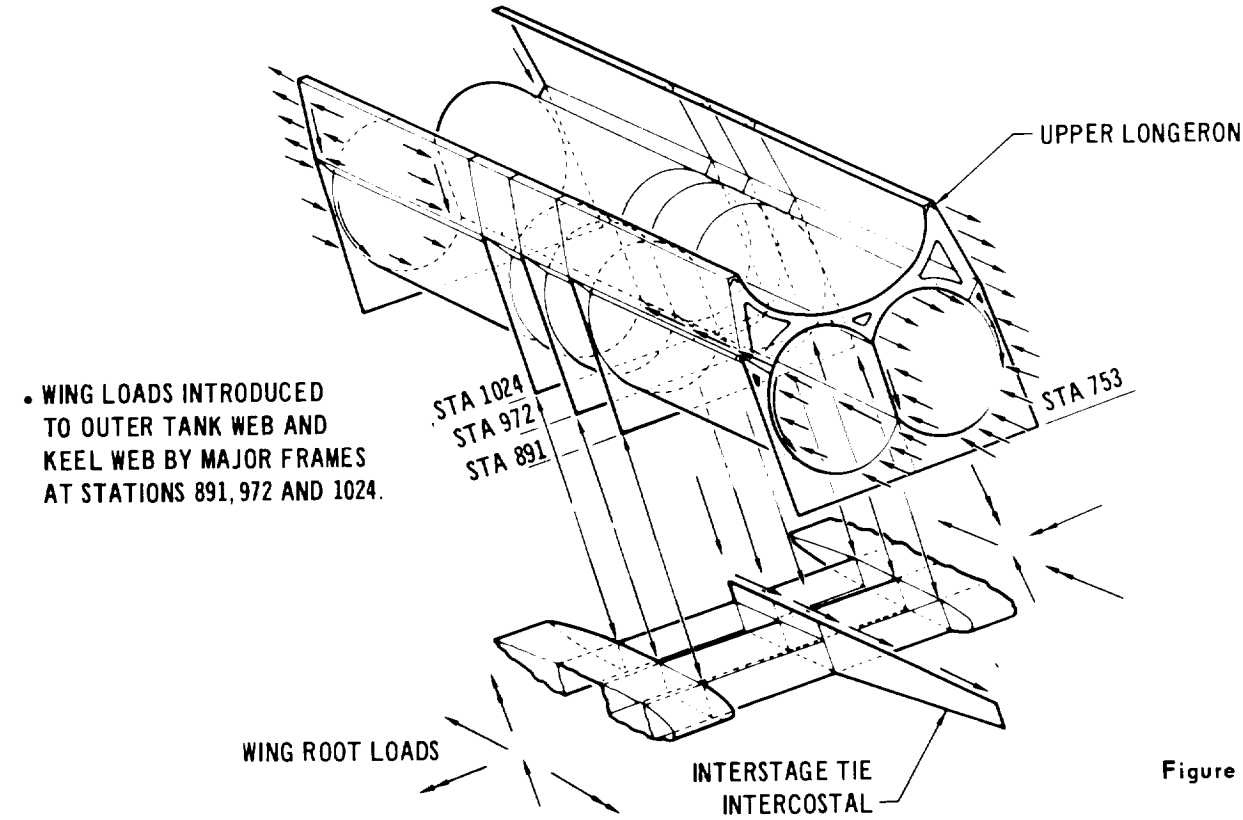

Figure 3.2–7

3.2.1.2 Booster Fuselage - The booster fuselage as shown in Figure 3.2-8 is similar in concept to the orbiter fuselage. The main propellant tanks are "integral" aluminum body structure and carry overall vehicle loads as well as internal pressures. The forward fuselage primary structure is the outer shell which consists of stiffened titanium skins and frames, protected from ascent and reentry heating with external HCF similar to the arrangement on the orbiter forward fuselage.

Transfer of overall body loads from the outer shell of the forward fuselage to the main propellant tanks utilizes intercostals and frames at stations 566 and 790. Propellant tanks become the primary structure from this point aft to the thrust and tie-down structures. The thermal protection system, similar to that of the orbiter consists of shingles supported on beams and links to stiffening rings on the primary body structure.

The booster thrust structure, shown in Figure 3.2-9, is a conical shell extension of the aft end of the H_2 tank. Seven of the ten engines mount on intercostals attached to the conical shell and two major rings. Three engines central to the shell are mounted on beams which attach to the shell. The vehicle

STRUCTURAL ARRANGEMENT – BOOSTER

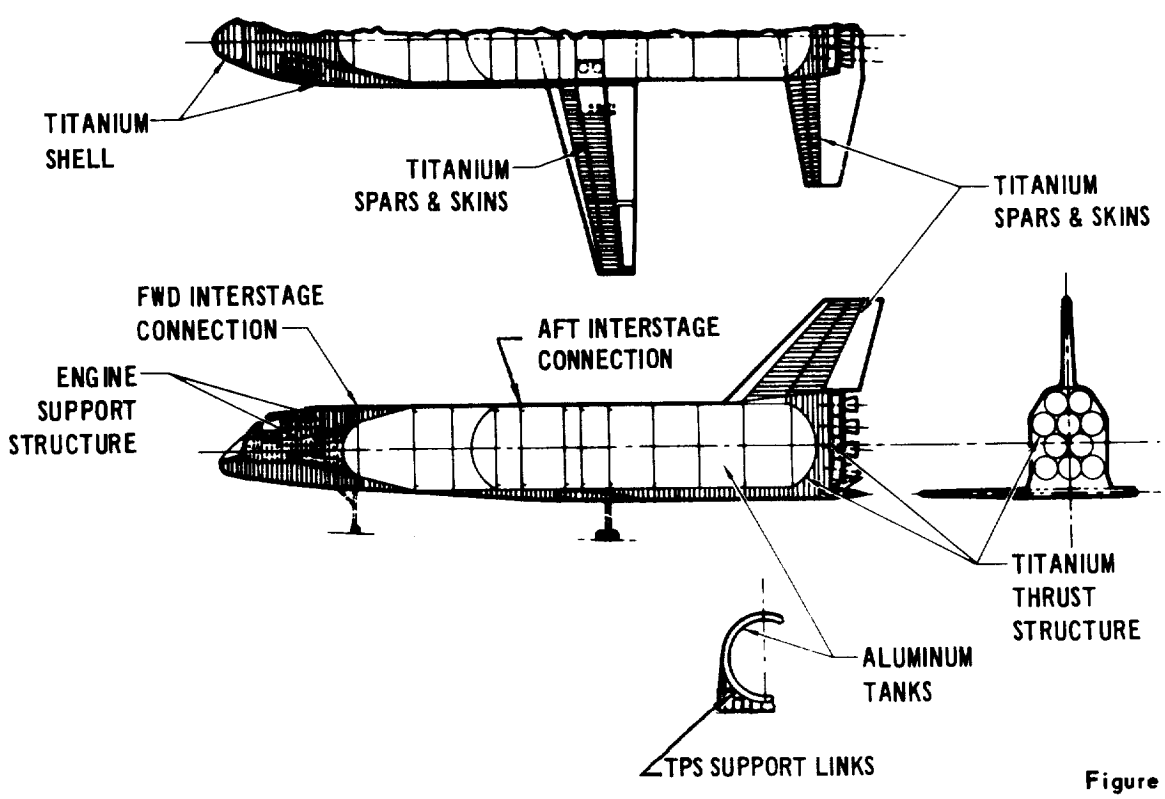

Figure 3.2-8

THRUST STRUCTURE – BOOSTER

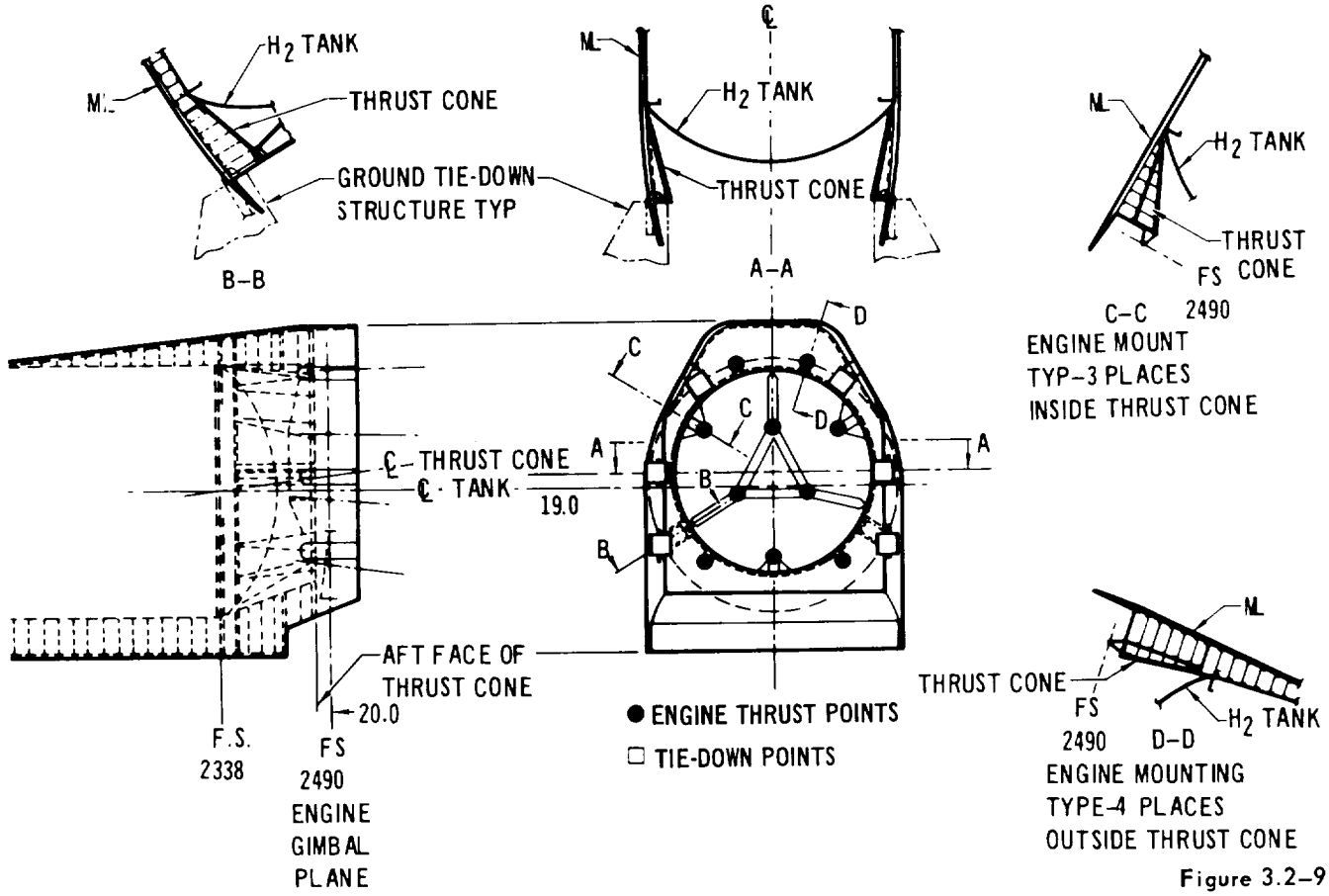

Figure 3.2–9

is supported on the pad in launch attitude at six hard points in the thrust cone structure. The hard point loads are transmitted to the thrust cone structure by intercostals arranged in a manner similar to the engine mounting intercostals.

Major rings in the thrust cone also distribute vertical and horizontal tail loads to the body structure (thrust cone).

The concept of surface TPS is similar to that for the orbiter except that shingles cover the entire main body area for tank protection. Temperatures are lower than for the orbiter such that HCF shingles are limited to the bottom and side regions within approximately four feet of the chine lines. The remaining areas are covered by the lightweight single thickness beaded titanium panels over the sides and top and a smooth titanium single skin, stiffened by internal corrugations on the bottom center of the fuselage.

3.2.1.3 Wing Structures - The orbiter, as shown in Figure 3.2-10, and booster wings are similar in concept.

WING STRUCTURAL ARRANGEMENT - ORBITER

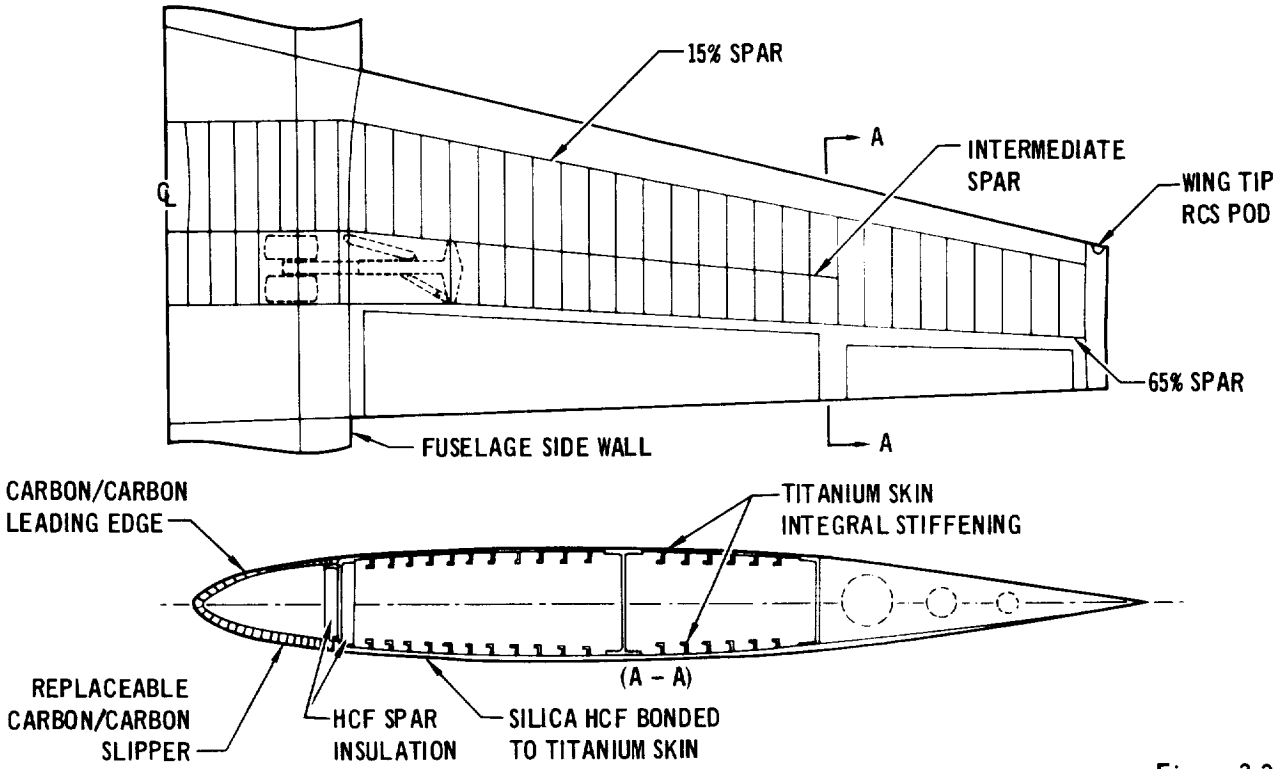

Figure 3.2-10

The primary two cell wing box is made of 6Al-4V titanium with integrally stiffened skins of conventional arrangement. The main box is protected from reentry heating by external insulation (HCF) bonded to the lower surface. The thickness of the HCF is established to not exceed a bond line temperature of 500°F. The upper wing surface experiences temperatures of less than 800°F, and therefore is not insulated. The Orbiter wing leading edge (L.E.) is constructed of carbon/carbon composite honeycomb sandwich material that serves as structure and requires no additional TPS. The titanium structural box is insulated from L.E. radiative heat by a layer of HCF on the front spar. The Booster wing leading edge experiences lower temperatures, relatively, and is a titanium structure with external insulation (HCF).

3.2.2 Structural Design Criteria - The criteria summarized here were assembled to establish a basis for the study structural analysis tasks. Items usually found in a contract definition or acquisition phase structural design criteria were included only if necessary for the analysis planned for this stage of the development cycle. Continued expansion of the structural design criteria in scope and level of detail is planned as the Space Shuttle development cycle progresses.

3.2.2.1 Definitions

a. Structural Requirements - Structural requirements are values of specific design condition parameters such as loads and temperatures which satisfy conditions derived from the structural design criteria.

b. Design Conditions - The definitions of the combinations of natural and induced environments, based on the structural design criteria, which uniquely establish the structural design requirements.

c. Factor of Safety - Ratio of allowable load (or stress) to limit load (or stress) at the temperature which defines the allowable and is used to account for uncertainties and variations from item to item in material properties, fabrication quality and details and internal and external load distributions.

d. Temperature Uncertainty Factor - The temperature uncertainty factor is an arbitrary factor applied to predicted temperature to account for uncertainties in the thermal analysis.

e. Limit Load - Limit load is the maximum load or combination of loads the structure is expected to experience in a specific condition.

f. Ultimate Load - The product of the factor of safety times limit load.

g. Nominal Heating Effects - Nominal heating effects are temperatures or heating rates the structure is expected to experience based on nominal environments, performance and trajectories.

h. Predicted Heating Effects - Nominal heating effects are temperatures or heating rates which the structure is expected to experience during a design mission. Predicted temperatures are analogous to limit loads and include the effects of dispersions.

i. Design Heating Effects - Design heating effects are predicted heating effects with additional heating rate or temperature factors to account for analytical uncertainties.

3.2.2.2 General Arrangement and Design Weights - The vehicle arrangement used for the structural load calculation is as defined in Section 3.1 of this volume. The design weights for the 1st Stage and the 2nd Stage are presented in Figure 3.2-11 for the pertinent mission phases. These design data were used for determining the preliminary structural requirements.

3.2.2.3 Fundamental Criteria - The FAA (part 25), the applicable portions of the Military Specifications (8860 Series) and supersonic transport specifications are used as guidelines in establishing criteria for the vehicle. The intent is to

ORBITER/BOOSTER DESIGN WEIGHTS

MISSION PHASE	BOOSTER WEIGHT (LBS)	ORBITER WEIGHT (LBS)
Pre-Launch	2,251,910	602,280
Ascent		
Lift-off	2,251,910	602,280
Staging	414,730	602,280
Injection	--	202,280
Entry	414,730	167,260
Cruise	397,310	161,910
Landing	317,310	158,840

Figure 3.2-11

merge the appropriate items of spacecraft criteria with well established air transport criteria, modified if necessary to reflect the STS mission requirements. The following subsections define specific criteria related to the areas of strength, stiffness, factors of safety and pressurization factors. These data are the minimum requirements for the design and structural analysis of the vehicle.

Strength - The structure shall withstand limit load combined with predicted heating effects, without experiencing detrimental deflections.

The structure shall withstand the following ultimate conditions without failure: limit load combined with design heating effects or ultimate load combined with predicted heating effects, whichever is more critical. Structural reusability shall be based upon loads, temperatures and other environments resulting from nominal flight trajectories. The main propellant tankage criteria is as follows. The proof and burst pressure factors applied to the maximum operating pressures shall be 1.0 and 1.4 respectively. The mechanical load combinations shall be as follows:

a. Ultimate mechanical loads shall be combined with loads resulting from

ultimate compartment pressure except that where compartment pressure loads relieve mechanical loads, limit pressure loads shall be used with ultimate mechanical loads. Compartment pressures shall be based on maximum vent pressure or minimum regulator pressure whichever is most severe.

b. The tank pressures shall be combined as indicated in a. for mission phases in which the primary propulsion system is activated. For mission phases following ascent in which the primary propulsion system is not used the tanks shall be considered to be pressurized to the standby operating pressure or depressurized, whichever results in maximum loadings.

c. In addition to withstanding pressure differentials resulting from normal operations, common bulkheads shall be capable of withstanding loads resulting from a loss of 50 percent of the normal operating pressure in either tank, combined with inertia loads.

1. Factors of Safety - The required factor of safety shall be 1.4, except for cruise and landing phases when the factor of safety shall be 1.5. The "Design" load philosophy, FS = 1.0, is used for landing gear.

2. Dynamic Amplification Factor - The flexible body effects on overall loads shall be accounted for during ascent for multiplying the rigid body net loads normal to the C_L by a factor of 1.4 and the net axial loads by a factor of 1.1. Dynamic amplification factors applied to the rigid body limit loads shall be 1.6 for nose gear conditions and 1.2 for main gear conditions.

3. Design Heating Effects - Design heating effects shall be obtained by multiplying the temperatures resulting from predicted heating effects by an uncertainty factor of 1.1 when analytical uncertainties exist.

4. Pressurization Factors - The following proof and burst factors shall be applied to the maximum operating pressure of various components; excluding main propellant tanks.

Type of Vessel	Proof Factor	Burst Factor
Manned Compartments	1.33	2.0
Pneumatic Vessel	1.67	2.22
Hydraulic Vessel	1.5	2.5
Pyrotechnic Devices	1.2	1.5
Lines and Fittings	2.0	4.0

3.2.2.4 Mission Phase Related Criteria - The mission phase related criteria applicable to the study are defined herein.

Pre-Launch Phase - The Aerospace Vehicle (AV) or the BV and OV separately shall be designed for conditions resulting for 99% probability of non-exceedance surface winds and gusts for the launch site. The vehicles shall be mounted in a vertical position with or without propellant on-board, whichever is more critical. The resultant loads shall account for steady state winds, gusts, vortex shedding and dynamic effects. NASA Report TMX-53328 shall be used as a guide in defining the ground phase environments.

Ascent Phase - The Space Shuttle shall be designed for vertical liftoff as the primary ascent mode. The design winds aloft shall be 95% probability of non-exceedance for the launch site. The maximum dynamic pressure at staging shall not exceed 100 psf. Vehicle strength shall be provided for the structural requirements resulting from a malfunction of any single engine. The following condition shall be used to determine maximum airloads normal to the direction of flight unless wind response trajectory analyses have been performed for the specific configuration under study.

$M = 1.1$ $\alpha q = 3000$ deg-psf

$q = 505$ psf $\beta q = 5050$ deg-psf

The maximum longitudinal load factor during ascent shall be 2.5 for 1st stage flight and 3.0 for 2nd stage flight. The ascent design trajectory is shown in Figure 3.2-12.

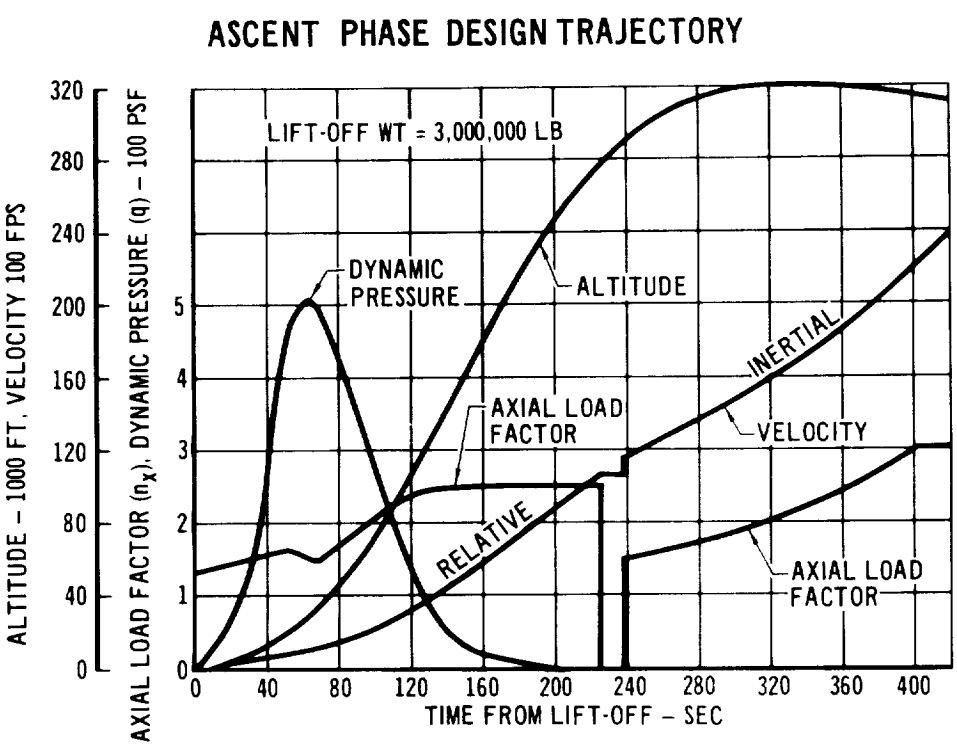

Figure 3.2-12

Entry and Transition Phase - The baseline entry design trajectory is presented in Section 8.4. Loads and structural temperatures based on this trajectory shall be limit and predicted, respectively. Transition from the entry attitude or configuration to the airplane cruise attitude or configuration shall be initiated at a Mach number of .4 or less. The design speed envelope for the orbiter vehicle is shown in Figure 3.2-13.

ORBITER DESIGN SPEEDS STRUCTURAL LIMIT

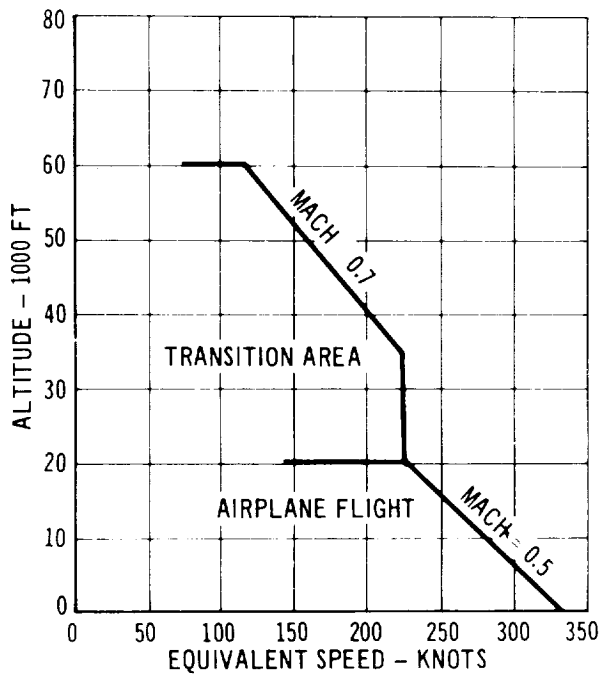

Figure 3.2-13

Cruise Phase - The V-n diagram for the orbiter is presented in Figure 3.2-14. The 2.5g load factor is common to both vehicles but stall lines and dive speeds are configuration dependent. Types of maneuvers required shall be based on applicable transport aircraft specification. The gust criteria of MIL-A-8861 is applicable. Engine-out side slip conditions shall apply to multi-engine cruise configurations.

Landing Phase - Vehicles shall be designed for sink speeds of 10 fps. Landing gear loads resulting from these conditions are neither limit nor ultimate but are treated as "design" values. Body load distributions resulting from these conditions are limit. Landing gear yielding or minor damage is acceptable at design levels provided the gear is functionally capable of one more landing. The dynamic amplification factors which are applied to the rigid body landing loads are as defined in Section 3.2.2.3.

ORBITER V-n DIAGRAM
Sea Level

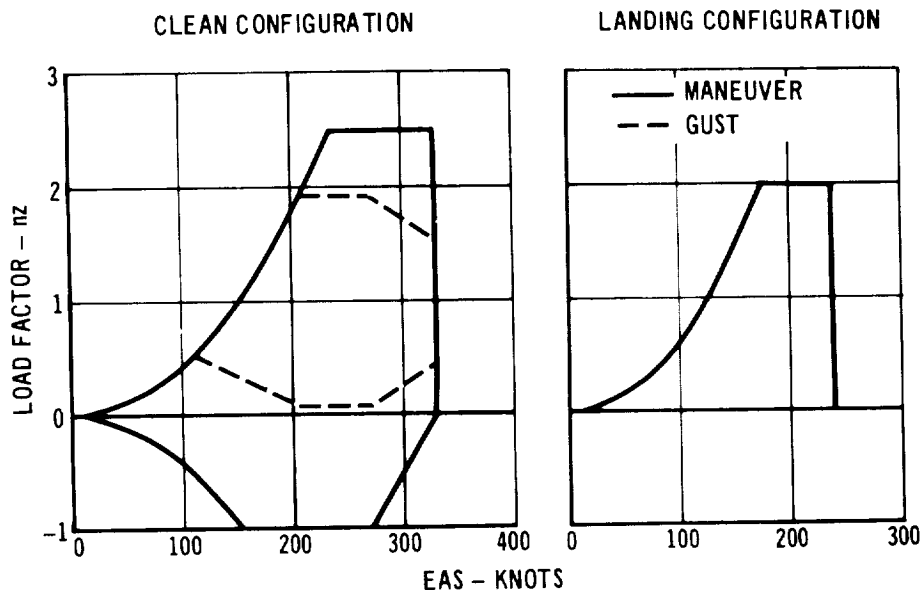

Figure 3.2-14

3.2.3 Loads - The Space Transportation System Vehicle loads presented in this section are based on the structural design criteria of Section 3.2.2 and the geometry described in Section 3.1. The magnitude of the structural loads is influenced by the vehicle mass distributions, locations of the interface attach points, and unsymmetrical aspects of the ascent configuration. The depth of the loads analyses is consistent with the conceptual nature of the study. For example, detailed wind response trajectory simulations were not performed to select the maximum airload condition. In lieu of this, values of αq = 3000 deg-psf and βq = 5050 deg-psf were used. This was judged to be conservative based on previous experience. Similar approximations are used in other areas.

The loading conditions which occur during the mission cycle are summarized in Figure 3.2-15. The conditions which are of major significance are noted. Limit load envelopes for the orbiter and booster fuselage are shown in Figures 3.2-16 and 3.2-17. The maximum load levels and the conditions for which they occur are indicated. Detailed load distributions for these conditions are presented in subsequent paragraphs.

SUMMARY OF DESIGN CONDITIONS

MISSION PHASE	LOAD CONDITION	VEHICLE SEGMENTS
GROUND HANDLING	HOISTING & JACKING	"HARD-POINTS" ONLY
PRE-LAUNCH	• GROUND WINDS	AFT FUSELAGE (STAGE 1 ONLY)
LAUNCH & ASCENT	RELEASE	INTERNAL MASS ITEMS
	• MAX DYNAMIC PRESSURE	EXTERNAL PANELS, FUSELAGE & INTERSTAGE ATTACHMENTS, AERO SURFACES.
	• MAX LONGITUDINAL LOAD	FUSELAGE INTERSTAGE ATTACHMENTS
	SHUT-DOWN	INTERSTAGE ATTACHMENTS & MASS ITEMS
	STAGING	RELEASE MECHANISM
ORBIT	CABIN PRESSURE DOCKING	CREW COMPARTMENT MECHANISMS
RE-ENTRY	• PRESSURE TEMPERATURE COMBINATIONS	EXTERNAL PANELS
TRANSITION	MAX NORMAL LOAD FACTOR	WING, CONTROL SURFACES
CRUISE	• V-N DIAGRAM & FLAP CONDITIONS	WING AND CONTROL SURFACES
LANDING	• TOUCHDOWN	FUSELAGE, LANDING GEAR AND AND MASS ITEMS
TAXI & TAKE-OFF	TOWING & BRAKING	LANDING GEAR

• DENOTES MAJOR DESIGN CONDITIONS

Figure 3.2–15

ORBITER VEHICLE NET LOAD ENVELOPE

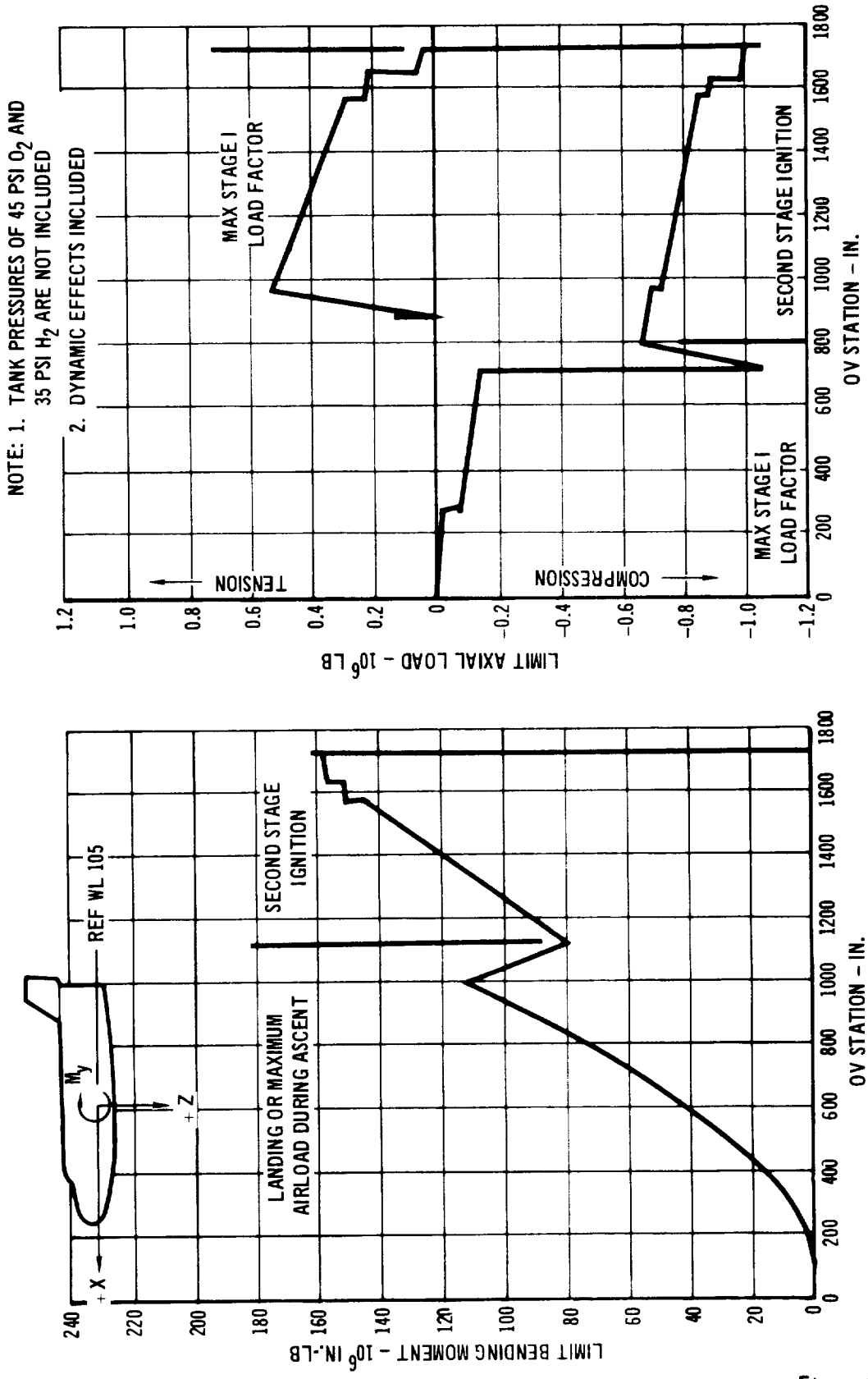

Figure 3.2–16

BOOSTER VEHICLE NET LOAD ENVELOPE

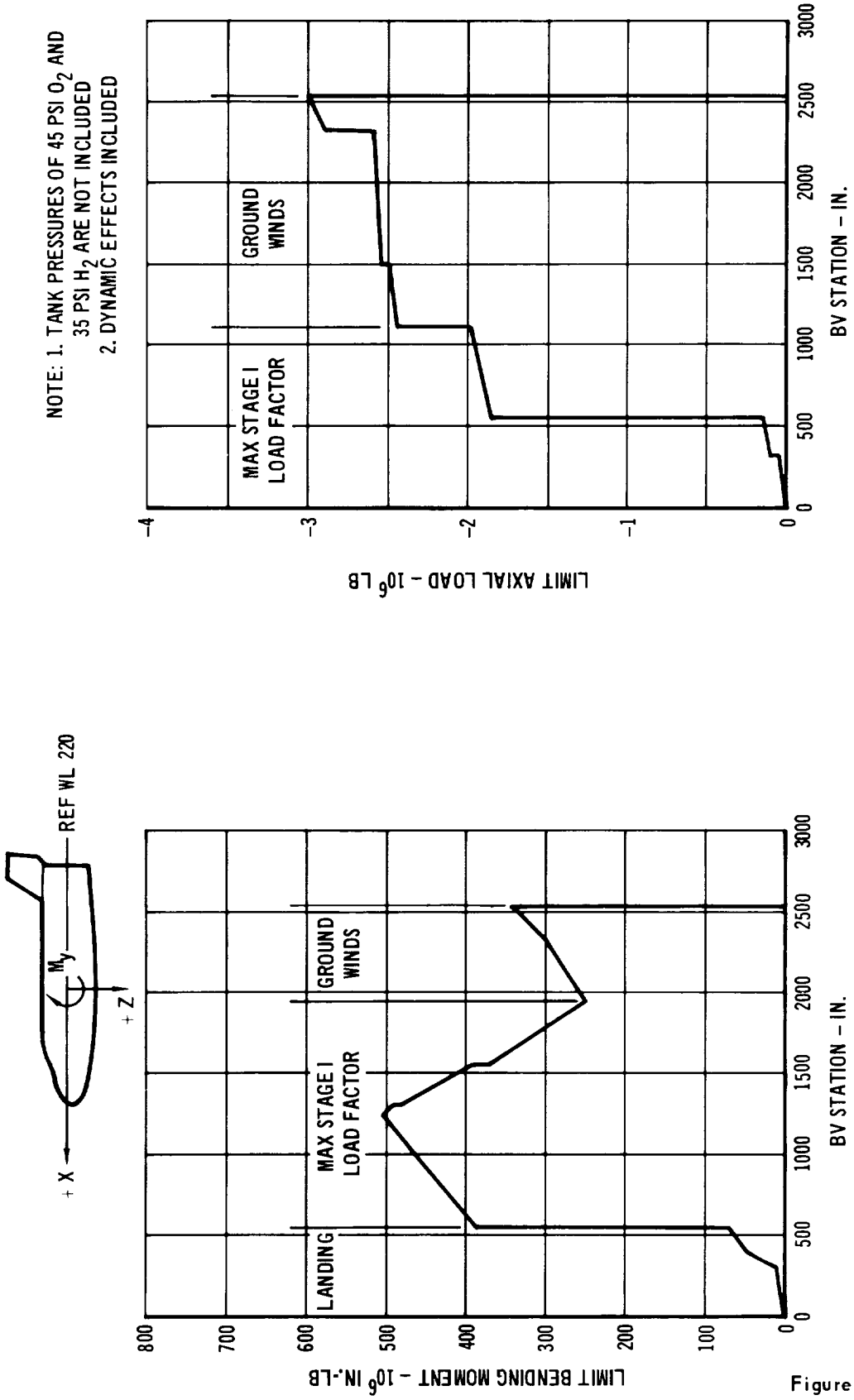

Figure 3.2–17

3.2.3.1 Ground Phase - The ground wind condition results in maximum loading for the aft portion of the booster when the two vehicles are erected in the vertical launch position. The resultant load includes the effect of steady winds, gusts, vortex shedding, and dynamic response to the gust. The vehicle is canted 1.3 degrees in pitch for the maximum lift-off weight condition. Net load distributions on the booster are presented in Figures 3.2-18 through 3.2-20.

BOOSTER VEHICLE SHEAR DISTRIBUTION
GROUND WIND CONDITION

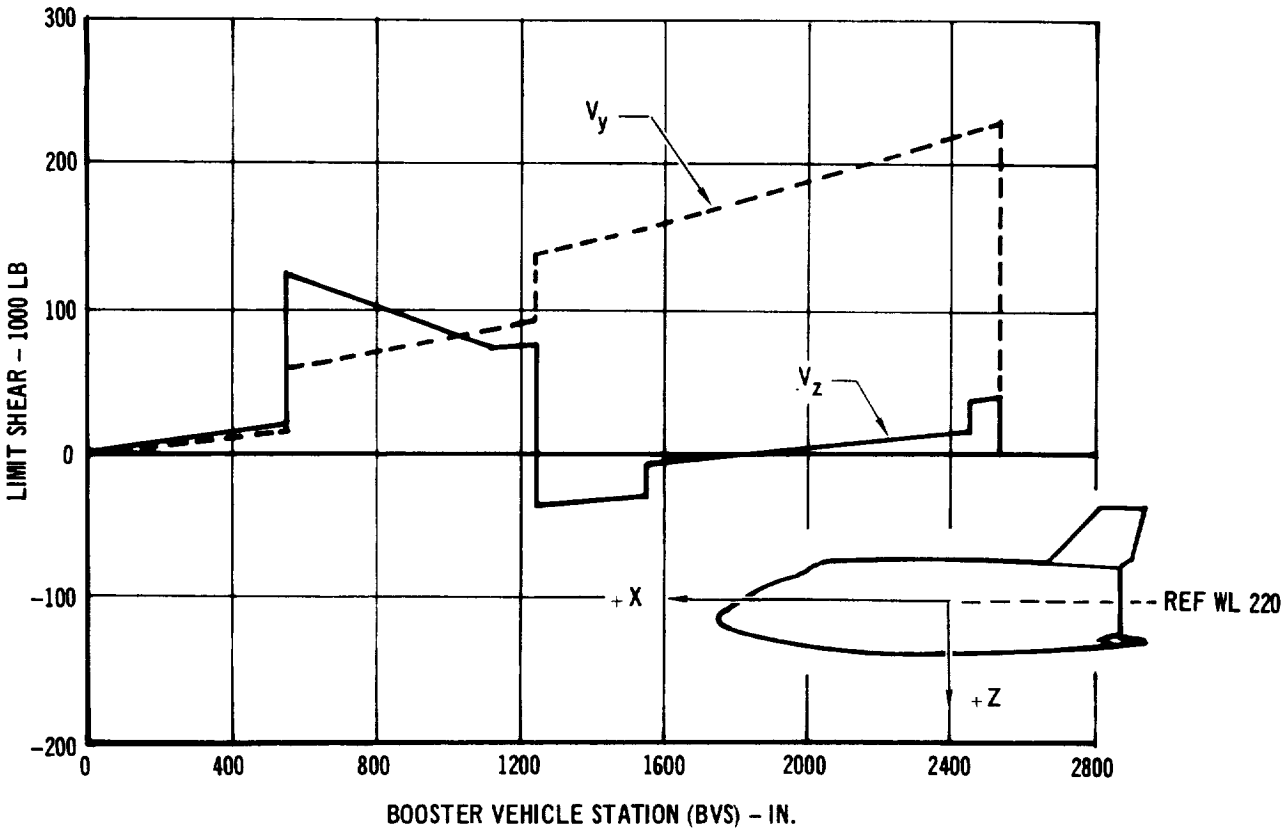

Figure 3.2-18

BOOSTER VEHICLE BENDING MOMENT
GROUND WIND CONDITION

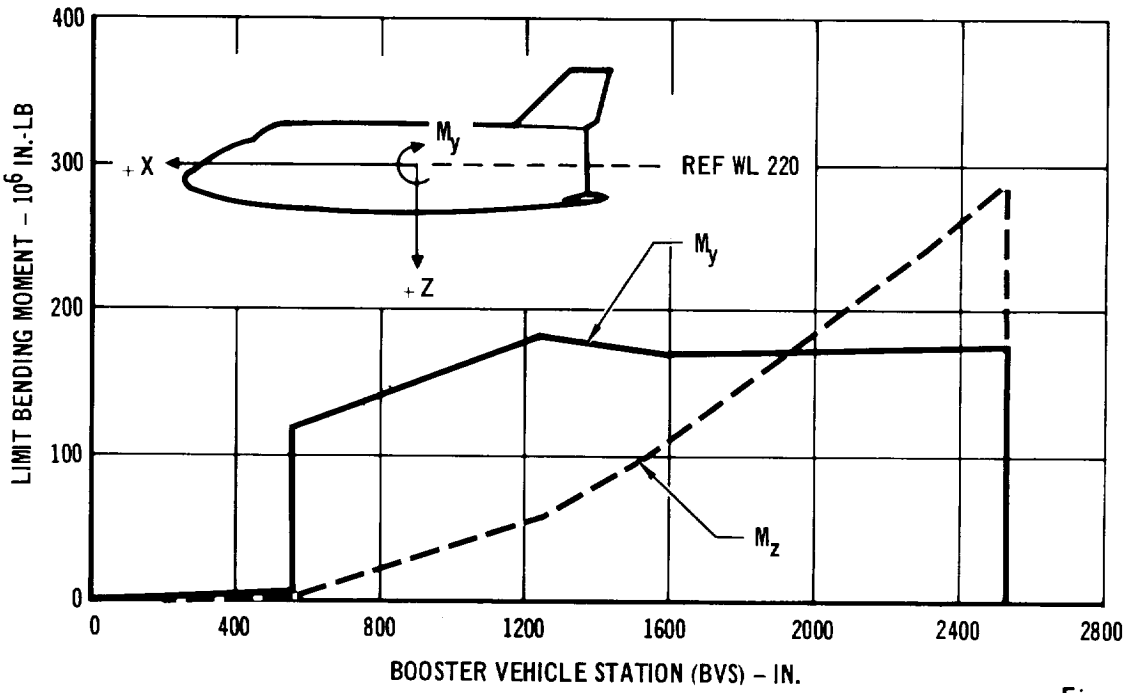

Figure 3.2–19

BOOSTER VEHICLE AXIAL LOAD
GROUND WIND CONDITION

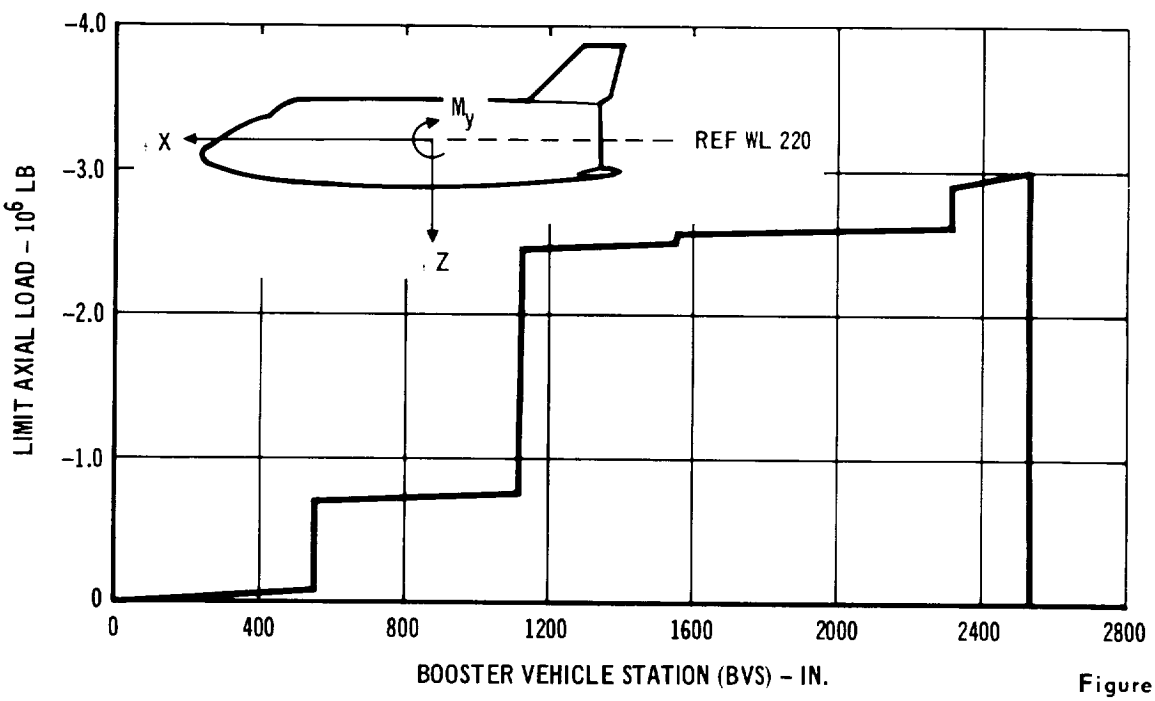

Figure 3.2–20

3.2.3.2 Ascent Phase - Significant loadings on the orbiter and booster occur during the period of maximum dynamic pressure, at maximum longitudinal acceleration just prior to end of first stage boost, and at second stage ignition. Net load distributions for these conditions are presented in Figures 3.2-21 through 3.2-32. Orbiter/Booster interface loads for these conditions are shown in Figure 3.2-33.

3.2.3.3 Cruise Phase - In the airplane cruise phase the maximum design normal load factor is +2.5 or -1.0. The maximum wing bending occurs in the clean wing configuration for a normal vertical load factor of 2.5. This condition is presented in Figure 3.2-34 for the orbiter vehicle.

3.2.3.4 Landing Phase - The design sink speed for landing for both the orbiter and booster is 10 feet per second. The design loads on the fuselage during landing result from a two point landing with 1 g on each main gear and 1 g lift. This results in a 3 g bending condition on the fuselage. The distributed loads for this condition are shown in Figure 3.2-35 for the orbiter and Figure 3.2-36 for the booster.

ORBITER VEHICLE SHEAR DISTRIBUTION
MAXIMUM βq CONDITION

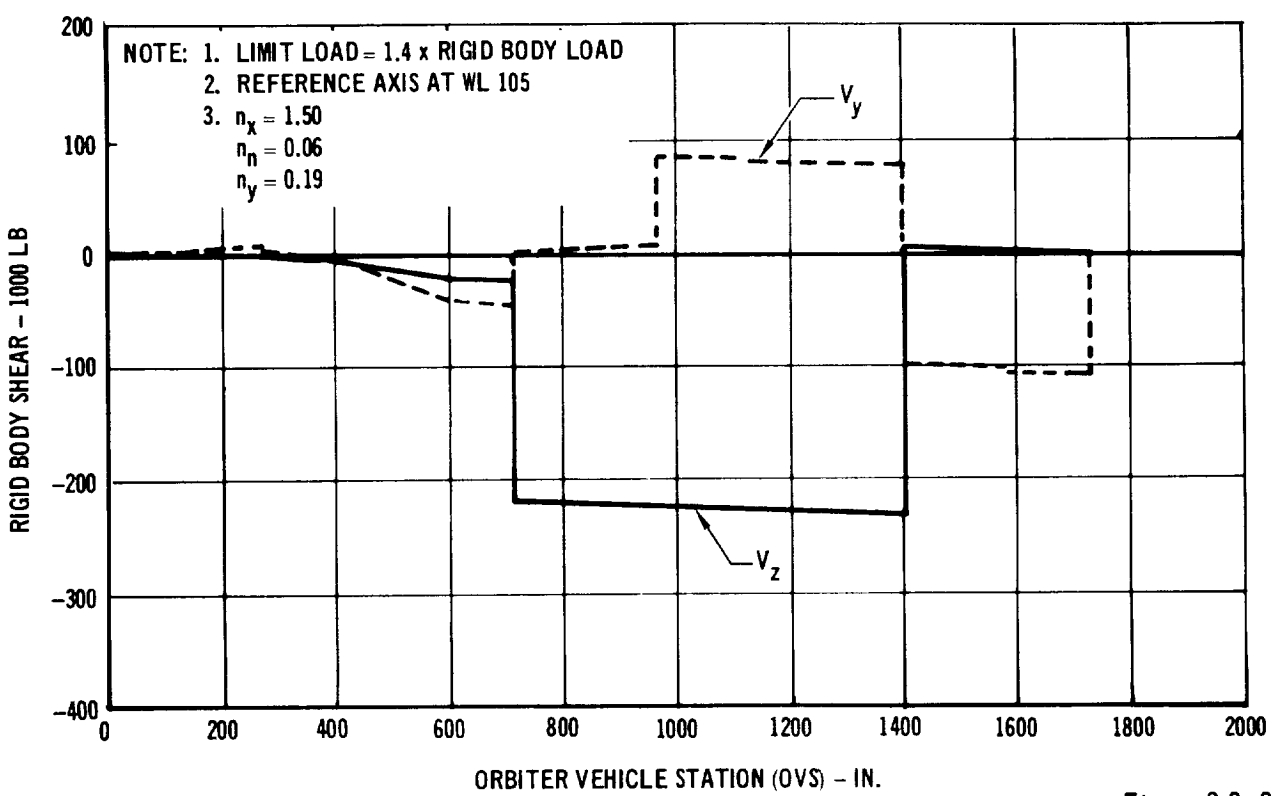

Figure 3.2-21

ORBITER VEHICLE BENDING MOMENT
MAXIMUM βq CONDITION

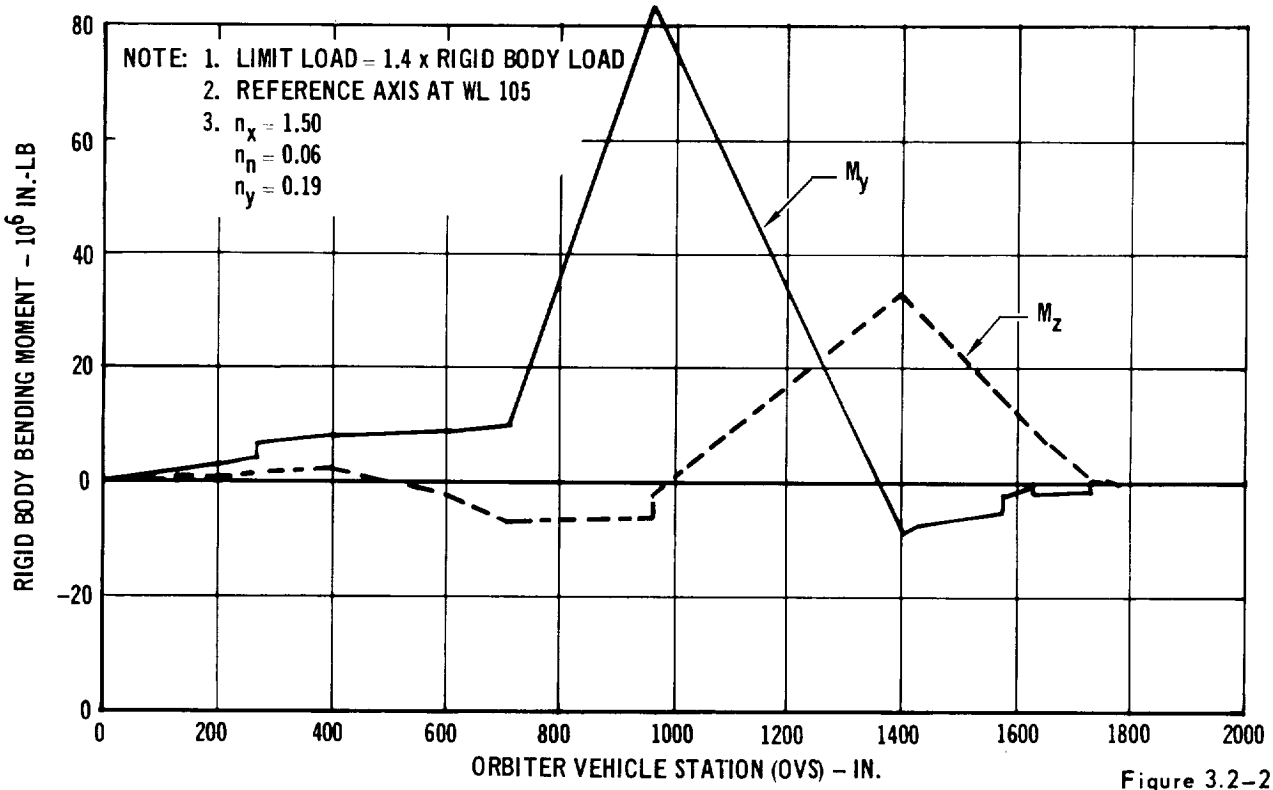

Figure 3.2–22

ORBITER VEHICLE AXIAL LOAD
MAXIMUM βq CONDITION

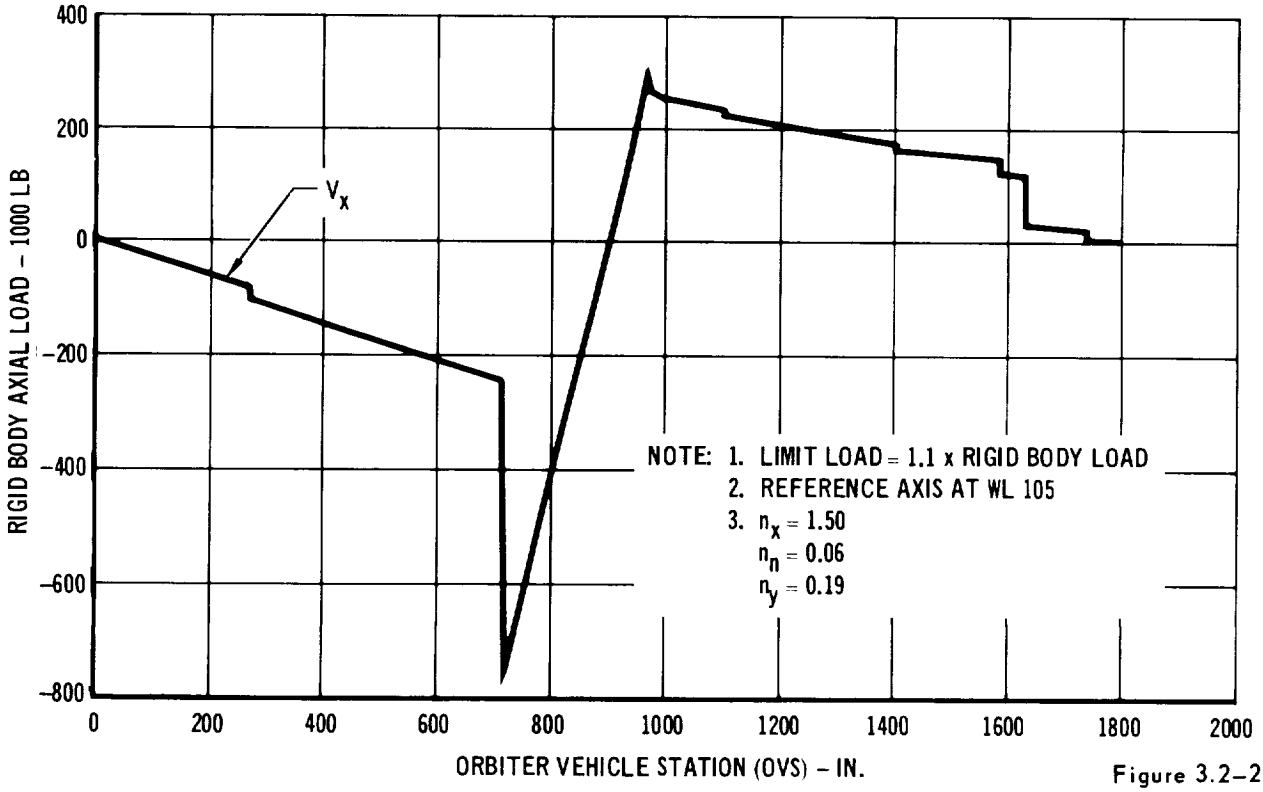

Figure 3.2–23

ORBITER VEHICLE SHEAR DISTRIBUTION
END OF FIRST STAGE BOOST

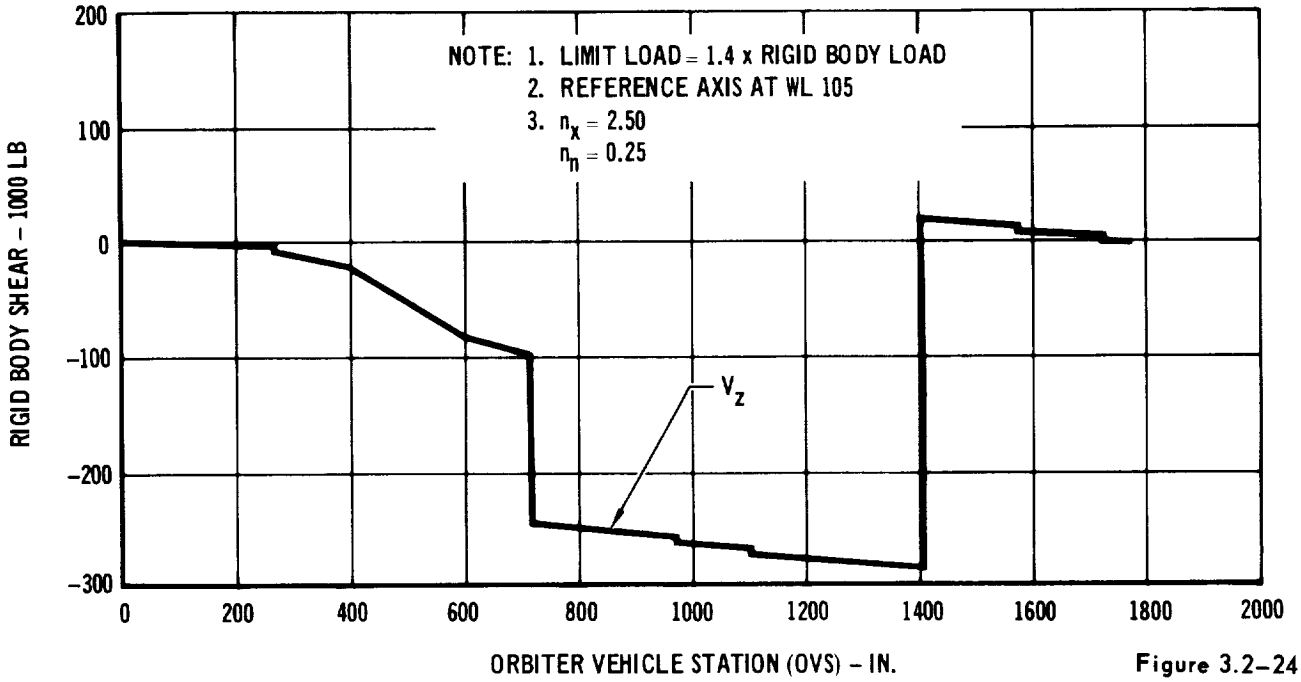

Figure 3.2–24

ORBITER VEHICLE BENDING MOMENT
END OF FIRST STAGE BOOST

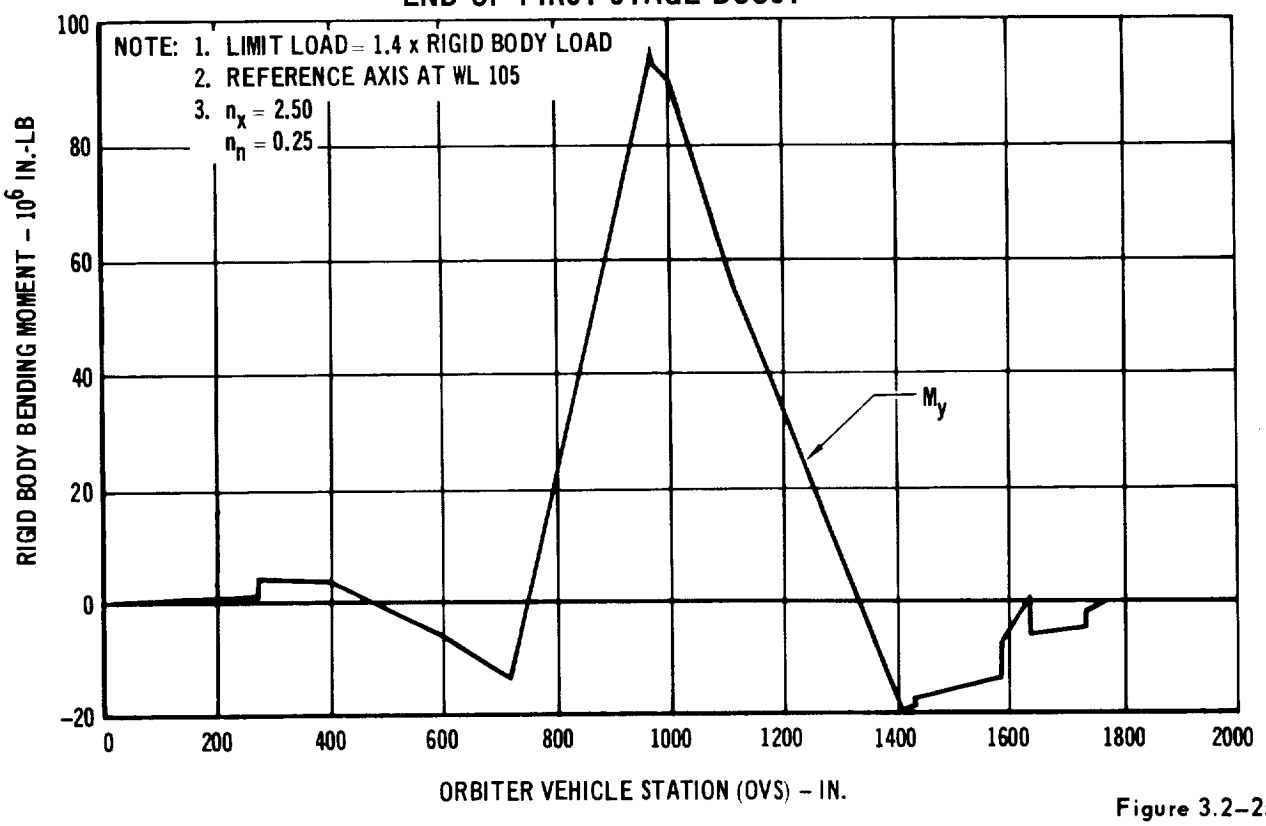

Figure 3.2–25

ORBITER VEHICLE AXIAL LOAD
END OF FIRST STAGE BOOST

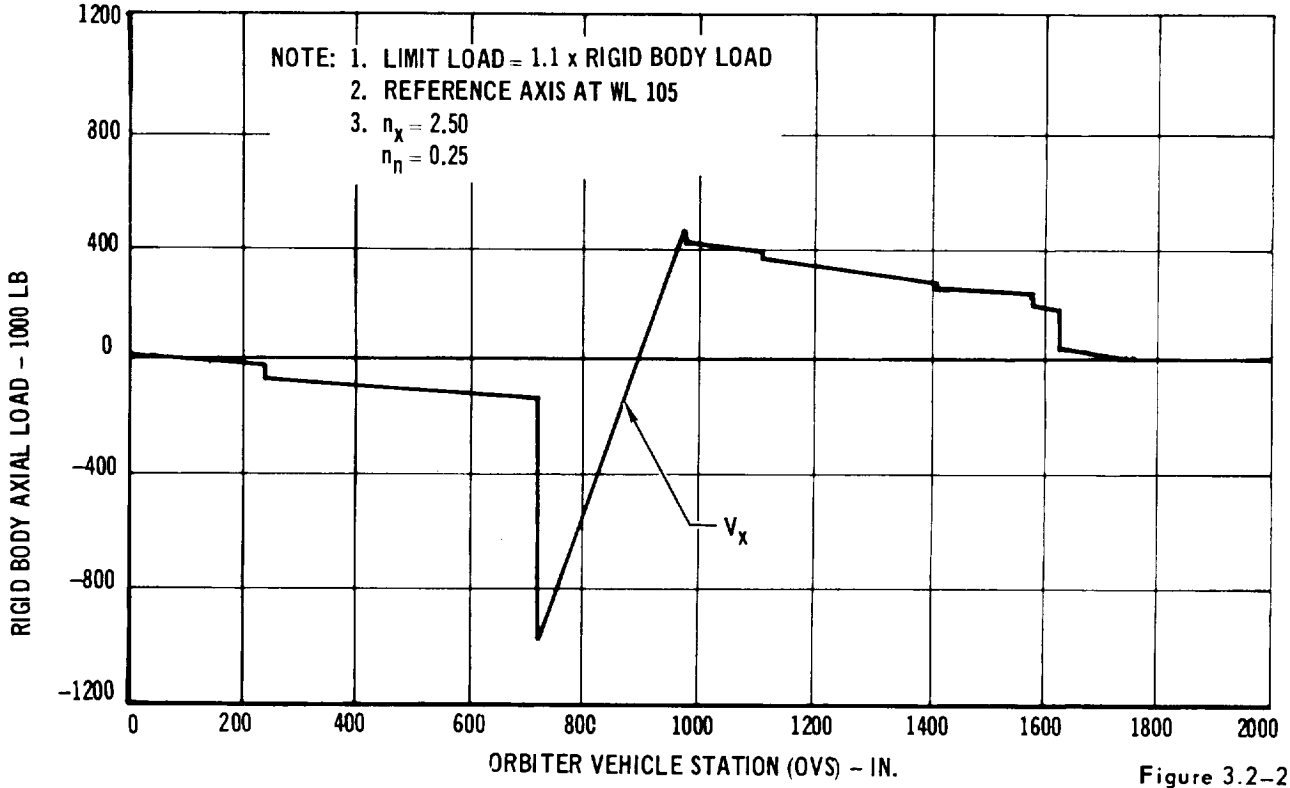

Figure 3.2-26

BOOSTER VEHICLE SHEAR DISTRIBUTION
END OF FIRST STAGE BOOST

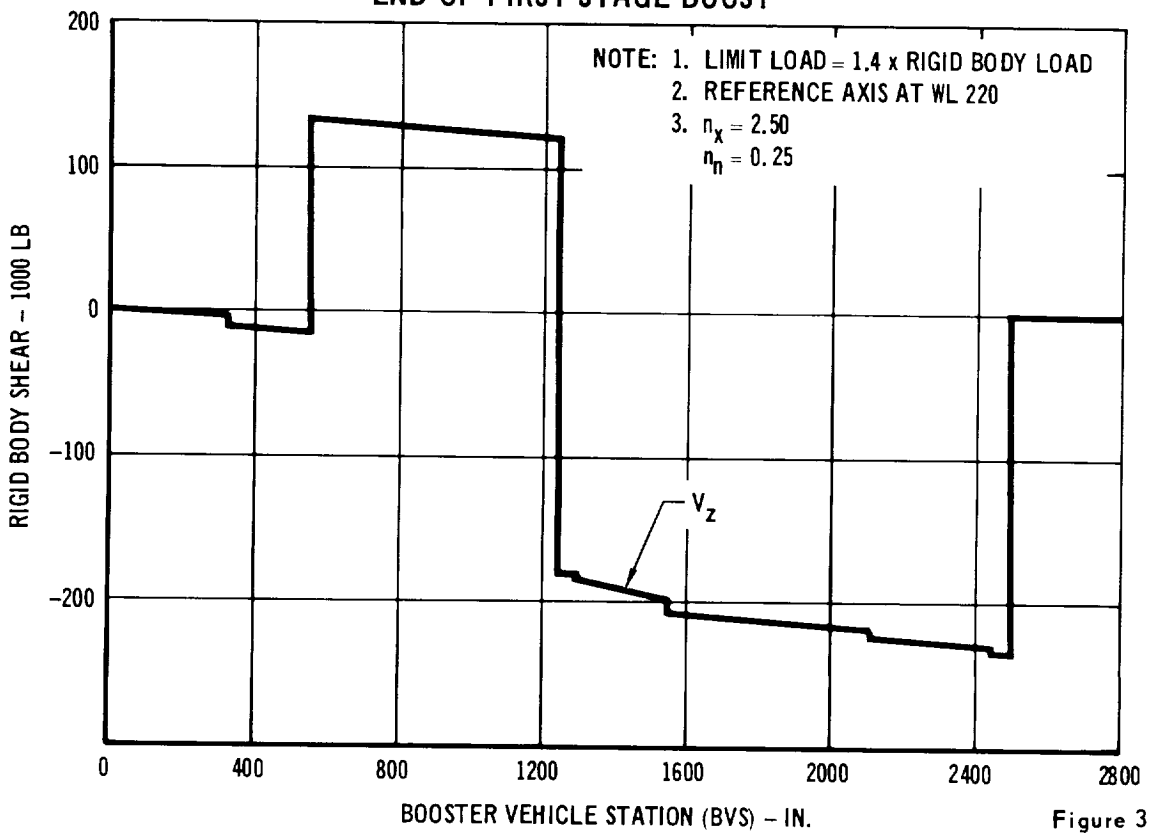

Figure 3.2-27

BOOSTER VEHICLE BENDING MOMENT
END OF FIRST STAGE BOOST

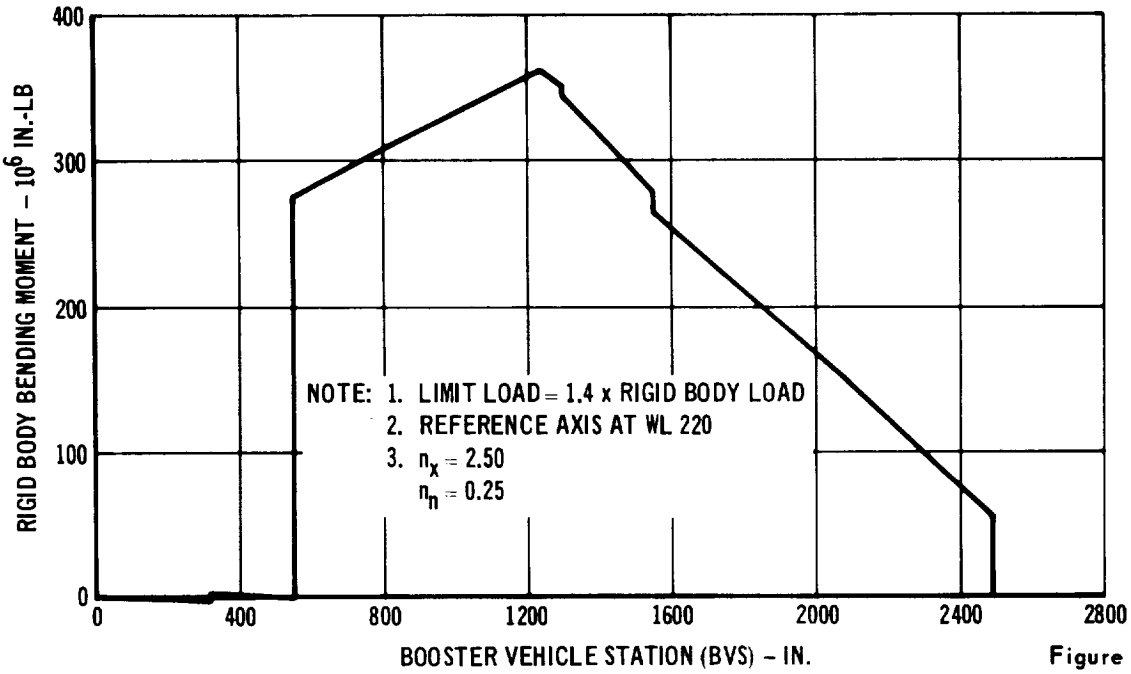

Figure 3.2–28

BOOSTER VEHICLE AXIAL LOAD
END OF FIRST STAGE BOOST

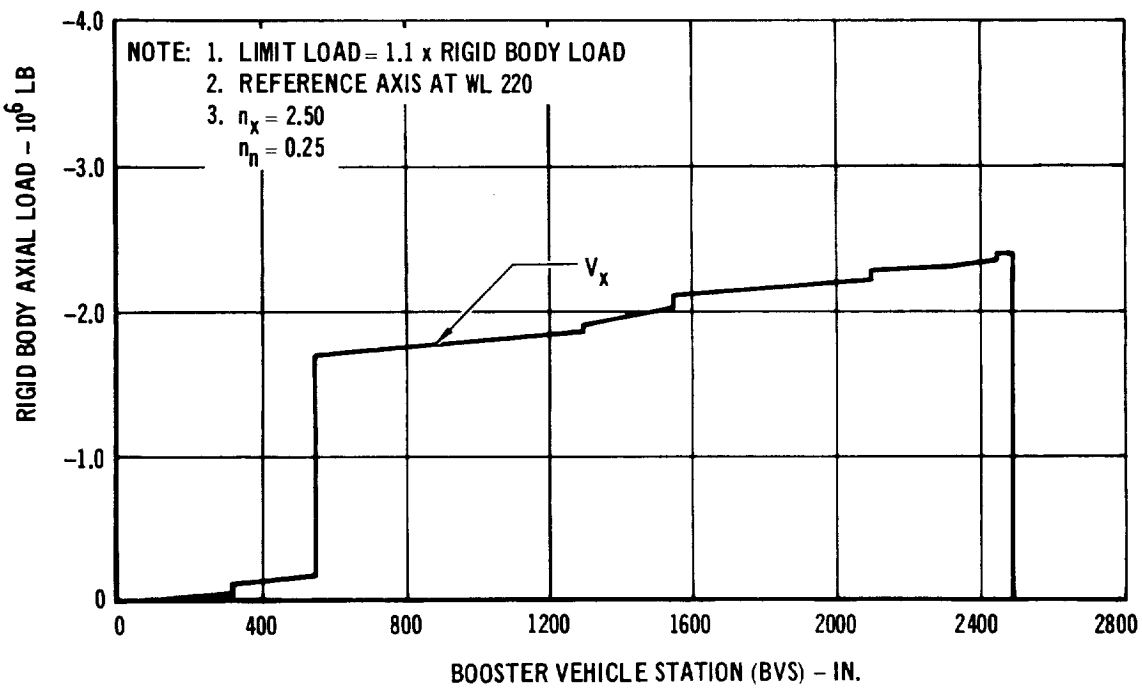

Figure 3.2–29

ORBITER VEHICLE SHEAR DISTRIBUTION
SECOND STAGE IGNITION

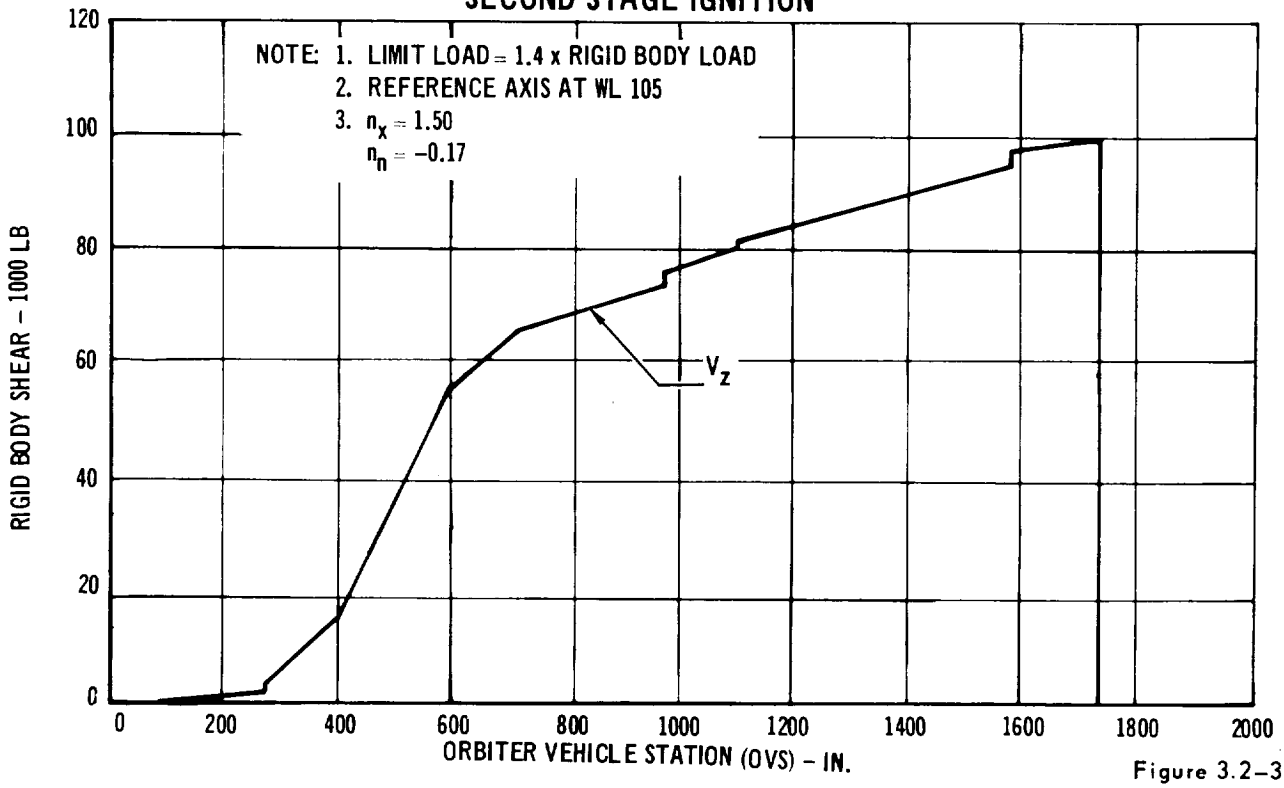

Figure 3.2–30

ORBITER VEHICLE BENDING MOMENT
SECOND STAGE IGNITION

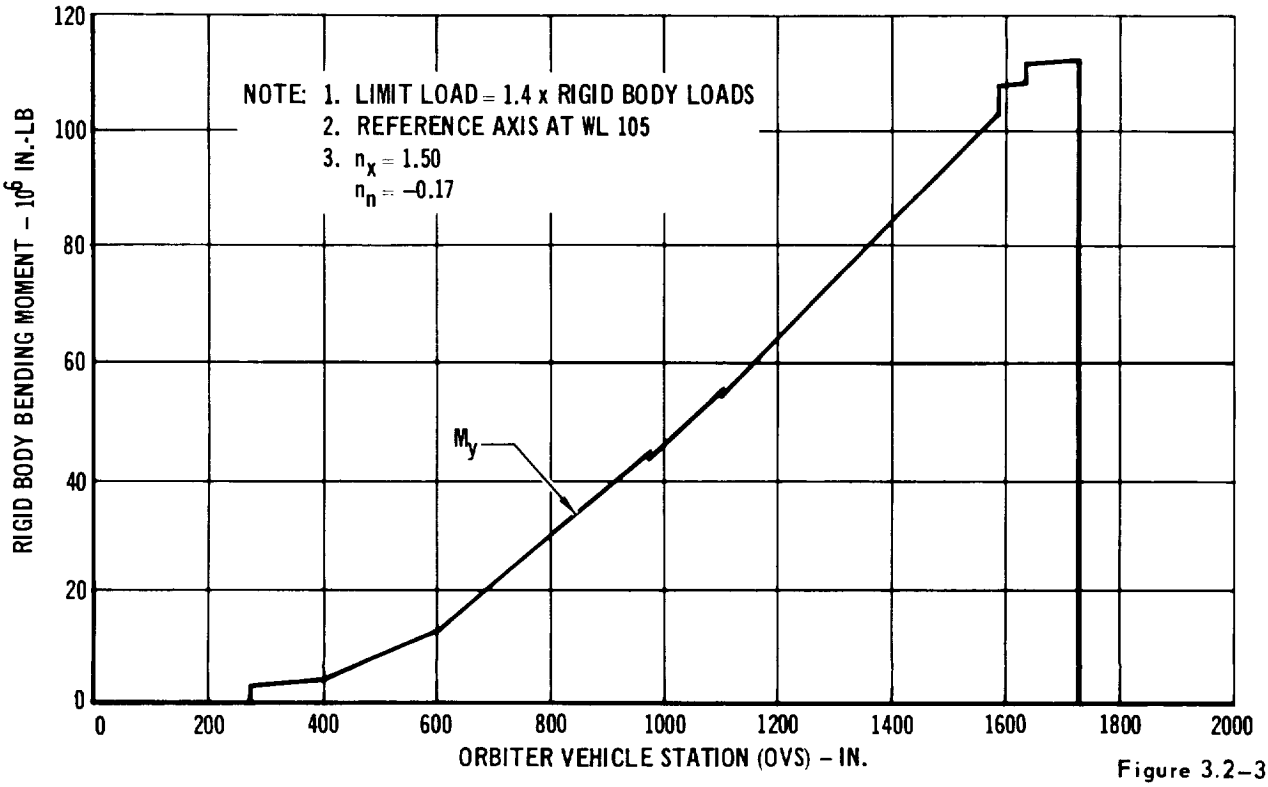

Figure 3.2–31

ORBITER VEHICLE AXIAL LOAD
SECOND STAGE IGNITION

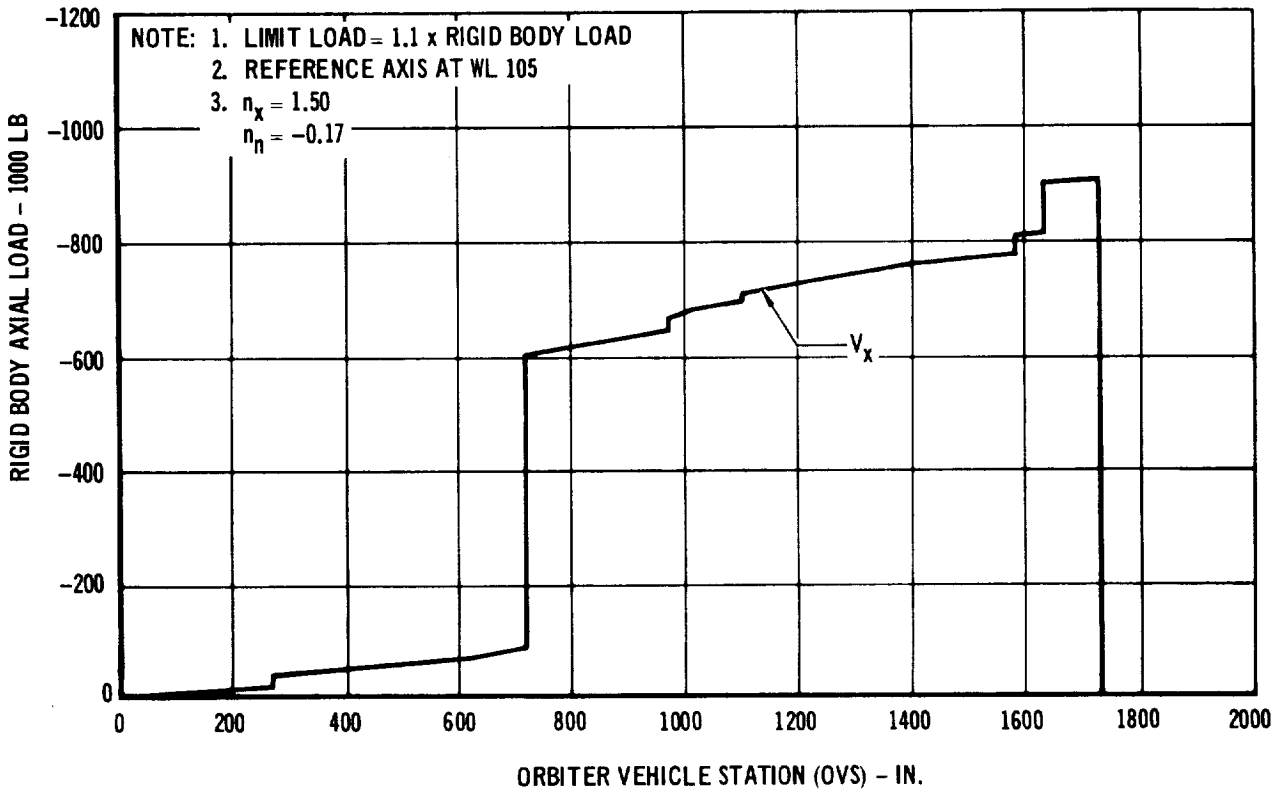

Figure 3.2-32

ORBITER/BOOSTER RIGID BODY INTERFACE LOADS

CONDITION	DESCRIPTION	LIMIT RIGID BODY LOADS (10^6 LB)						
		R_{x_a}	R_{y_a}	R_{z_a}	R_{y_b}	R_{z_b}	R_{y_c}	R_{z_c}
A-1	MAX q	1.197	0	0.136	0	-0.106	0	-0.106
A-2	MAX βq ($\beta q = 5050$)	1.197	0.199	0.136	-0.116	-0.024	-0.116	-0.187
A-3	MAX αq ($\alpha q = 3000$)	1.197	0	0.202	0	-0.063	0	-0.063
A-4	END OF STAGE 1 BOOST	1.545	0	0.178	0	-0.150	0	-0.150

NOTE: 1. DYNAMIC MAGNIFICATION FACTORS ARE:
1.4 - LATERAL LOADS
1.1 - LONGITUDINAL LOADS
2. FACTOR OF SAFETY IS 1.4

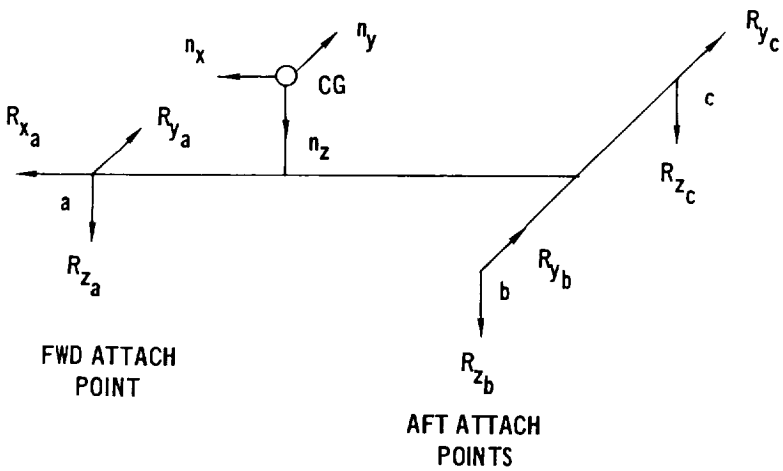

Figure 3.2-33

ORBITER VEHICLE
LIMIT WING LOADS

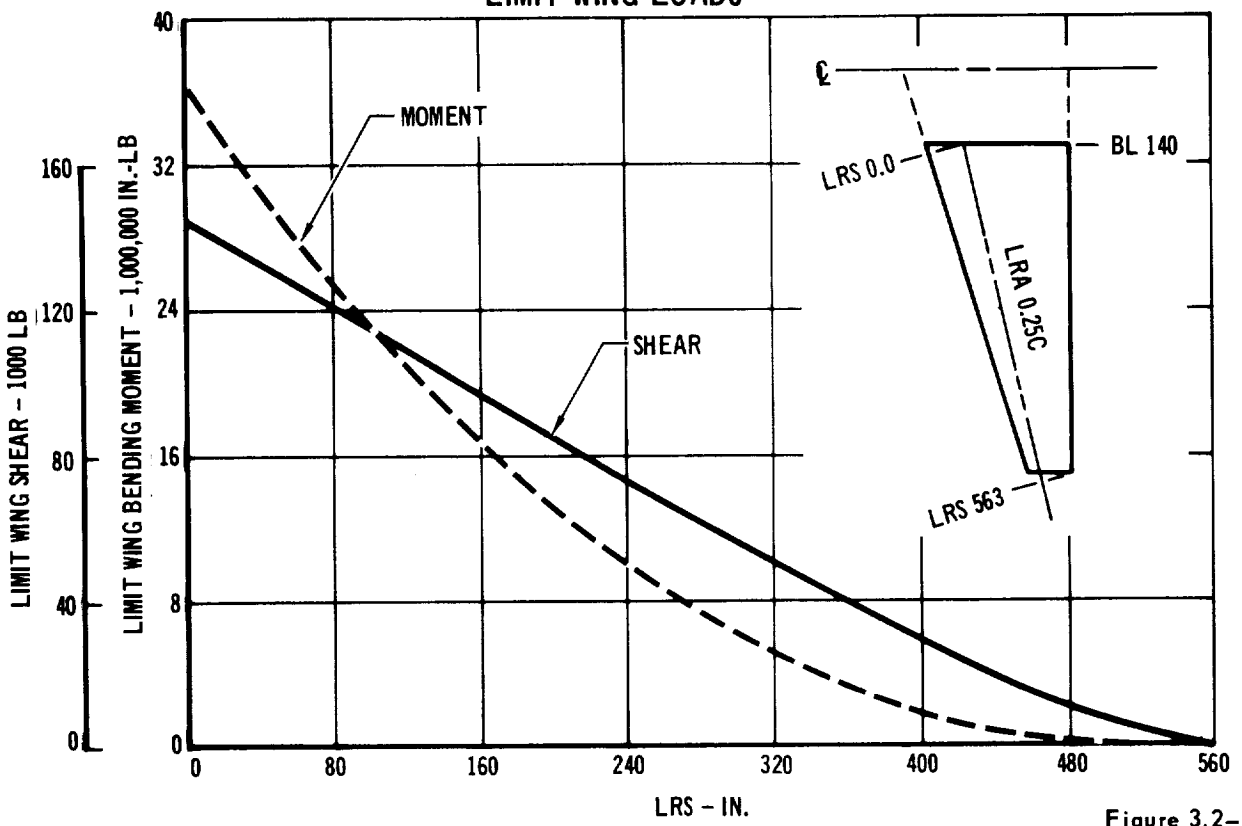

Figure 3.2-34

ORBITER VEHICLE BENDING MOMENT
LANDING CONDITION

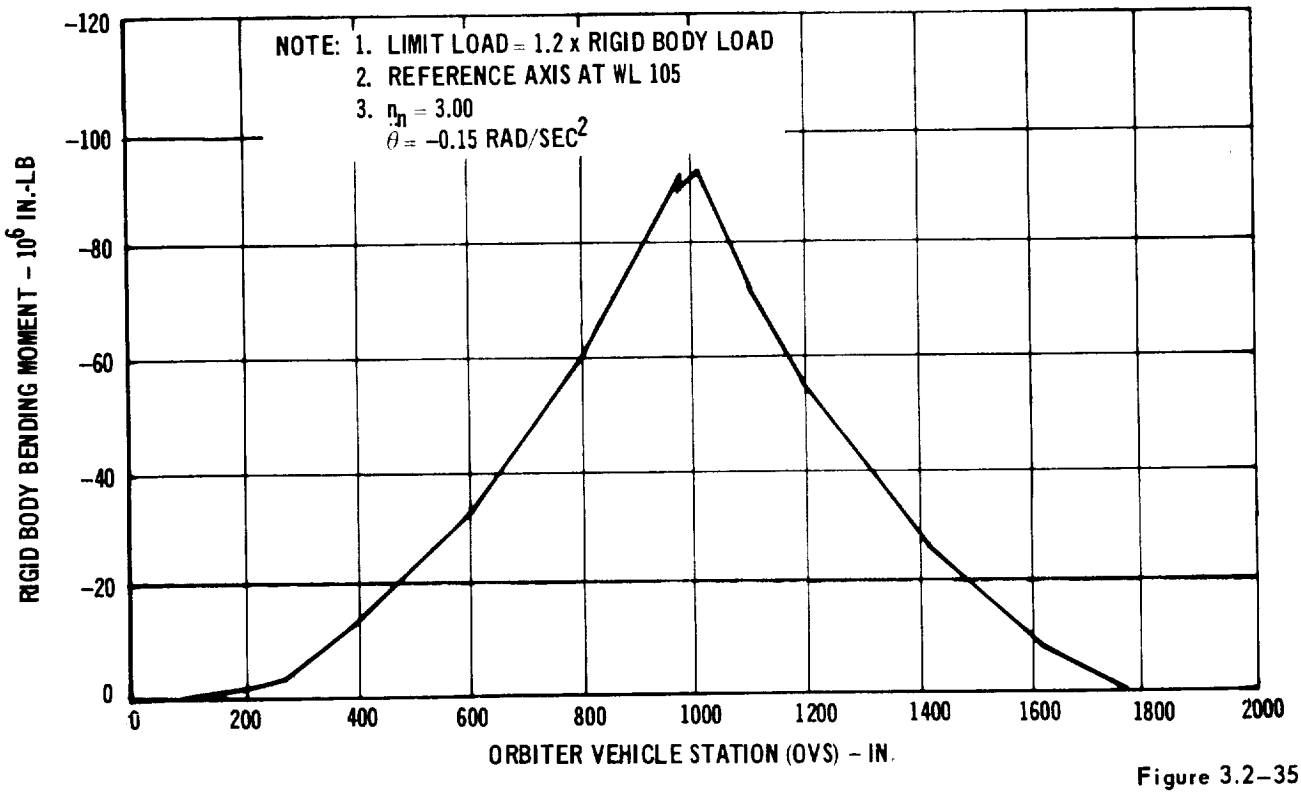

Figure 3.2-35

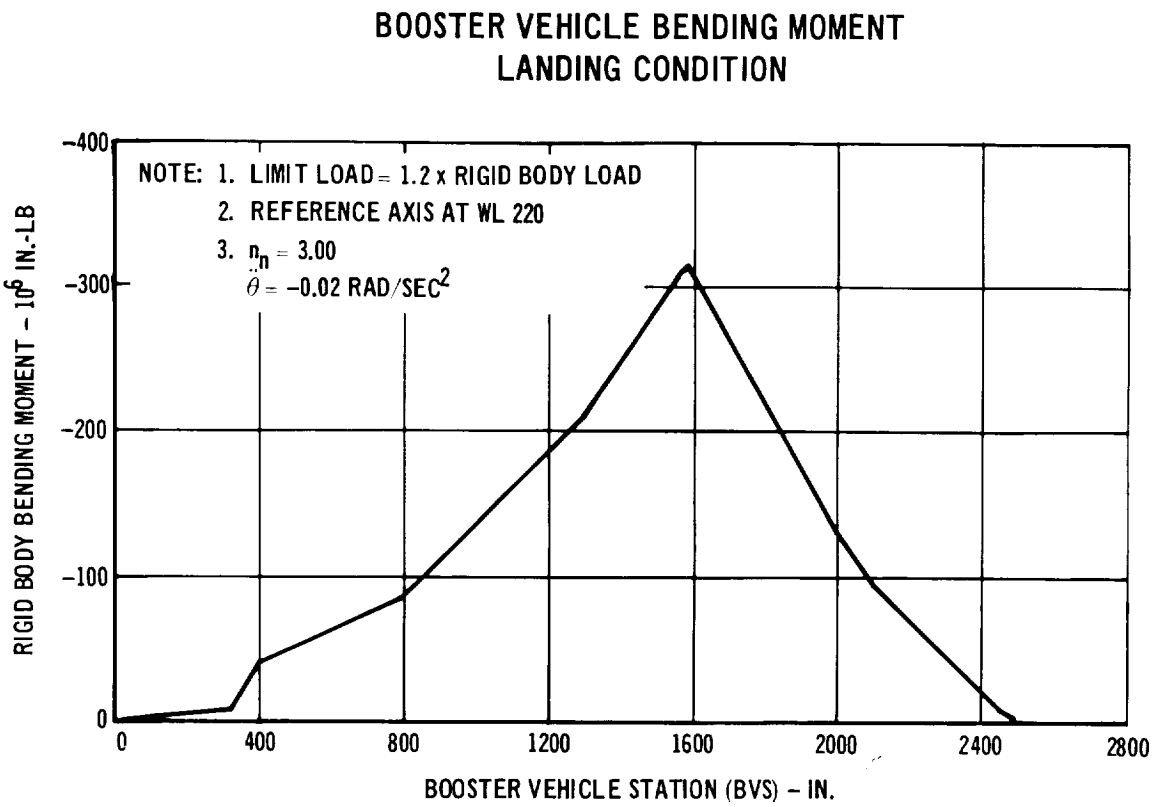

Figure 3.2-36

3.2.4 Analysis - Studies centered primarily on fuselage and TPS structures. Wing and tail structures are conventional except for the hot L.E. design. The basis of concepts and typical stress analyses are presented.

3.2.4.1 Fuselage Structures

a. Concept - The cylindrical tanks (booster) or an arrangement of cylindrical segments into multiple "bubble" tanks (orbiter) are optimum for tank pressures, which are primarily requirements affecting fuselage tank weight. A segmented shell requires a tension web joining lines of intersection of the segments. For any of these concepts and a given pressure, tank weight is dependent only on material and tank volume. A single cylinder for the booster and a double "bubble" arrangement for the orbiter accomplish good volumetric utilization with the least complexity (number of shell segments and webs). Continuing study is intended for increasing volumetric efficiency to decrease vehicle size or increase propellant capacity.

Tank structures are integrated into fuselage bending/shear structures. Recently studies of integral and non-integral tank concepts for hypersonic aircraft were conducted for tank shells using the multiple "bubble" arrangement of cylindrical segments. As shown in Figure 3.2-37, integral design with the higher volumetric efficiency also resulted in least unit structural weight. In the case of the orbiter payload arrangement similar maximum utilization is not feasible and tank cylinders are small relative to fuselage height. Hence fuselage side structures are also made to carry fuselage axial/bending loads by shear attachment to the tanks, thus utilizing available surface structures to maximize section modulus.

INTEGRAL AND NON-INTEGRAL TANK CONCEPTS

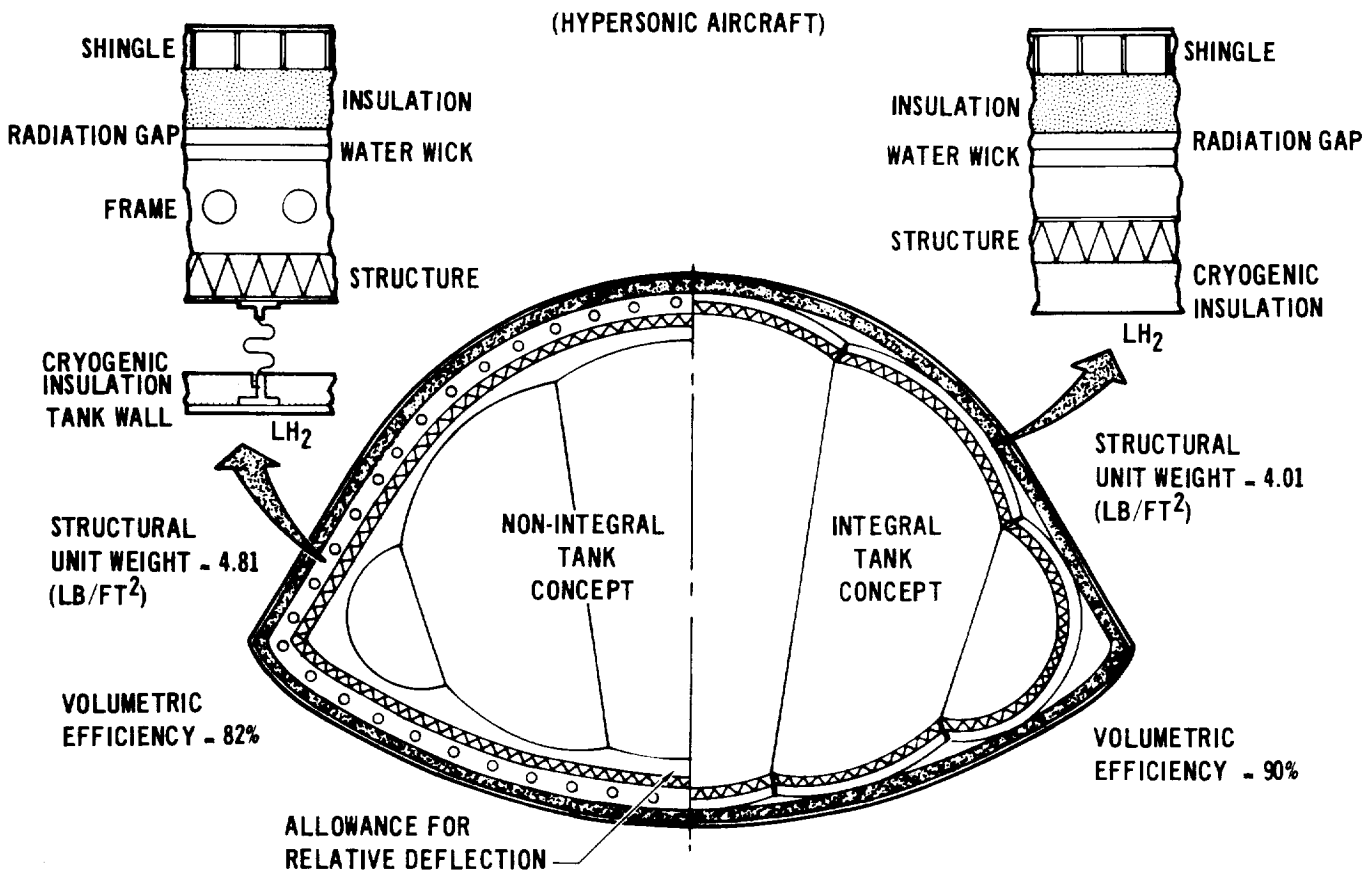

Figure 3.2–37

b. Bending/Shear Structure, Orbiter - Investigation of the integral tank concept included (a) warm and cool upper structures, (b) insulated (internal tank) warm shell, and non-insulated, cold tank shell and (c) 2021-T81 aluminum and 6Al-4V titanium tank structure. Comparison (a) considers effects of thermal strains for warm structures, TPS weight for cool structures and strength at temperature. Comparison (b) considers the effects of thermal strains and strength at temperature. Aluminum offers good compatibility with the propellants whereas titanium is the more efficient based on strength at temperatures including cryogenic. Study included the primary fuselage structures over the length of the tanks.

The critical conditions in the LO_2 tank region is End of 1st stage boost. Critical conditions in the LH_2 region are (1) End of 1st Stage Boost on the forward upper structure, (2) 2nd Stage Ignition on the aft upper structure and (3) Landing for the lower tank wall. Tank operating pressures (LO_2-45 psi limit and LH_2-35 psi limit) plus head pressures establish minimum required skin gages. Thermal strains are superimposed and are maximum during launch for non-insulated tank shells.

Cross section stress distribution is based on assumption that plane sections remain plane for thermal loads as well as mechanical loads. It is assumed that an inner tank lining (three ply: FEP/alum./FEP) is necessary for titanium shells to ensure against incompatibility with both propellants. For "non-insulated" tanks as used herein sufficient internal insulation is used in the LH_2 tank such that shell temperatures do not fall below the minimum (-320°F) in the LO_2 tank.

Results of the fuselage configuration study are shown graphically in Figure 3.2-38. TPS weight is the shingle panels, support structure and insulation mounted on the panels. In summary: (a) Warm upper structures in lieu of TPS insulation shingles provides a significant weight saving, (b) cold (cryogenic) tank shells result in a small structural weight saving and (c) aluminum tanks are slightly more efficient than titanium tanks with internal lining (without a fuel barrier, titanium tanks are least weight).

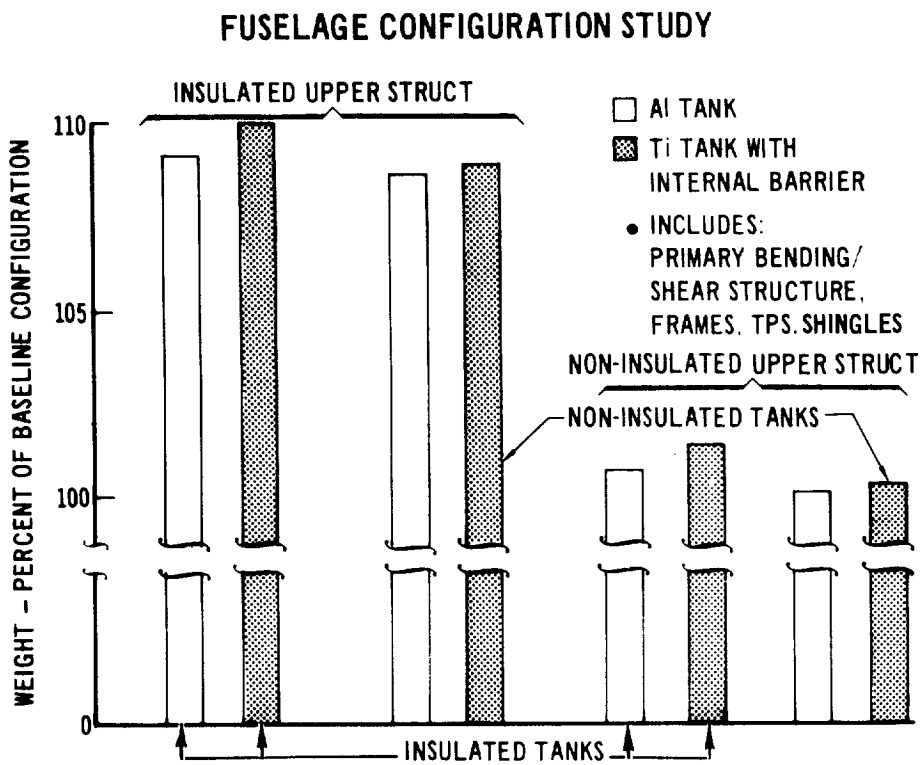

Figure 3.2-38

The upper fuselage structure is 8Al-1Mo-1V titanium selected for high strength and stiffness efficiencies. Aluminum 2021-T81 is chosen for the tank structure because of excellent weldability and strength down to cryogenic temperatures. However, in a final analysis of tank materials, aluminum alloys should include 2014-T651 and 2219-T87. A favorable alternate to titanium 6Al-4V in cryogenic applications is 5Al-2.5Sn for improved notch sensitivity and ductility.

A typical analysis of the fuselage shell is illustrated in Figure Figure 3.2-39 for the section at station 1000.

ORBITER FUSELAGE SECTION ANALYSIS - STATION 1000

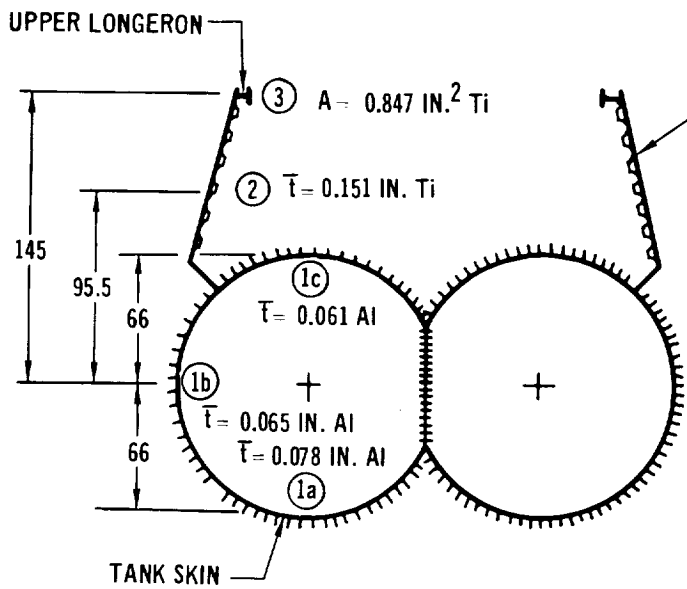

Effective Area
= 85.2 in^2 of -320° Al

Effective Moment of Inertia
= 343,500 in^4 of -320° Al

Neutral Axis
= 34.4 in above tank C_L

Limit Axial Loads and Moments (Ref. Section 3.2.3)

Note: + Moments = compression in longeron
+ Axial Load = Tension

Condition	Axial Load (10^{-3} lbs)	Moment (10^{-6} in lbs)
Max βq	+275	+107
End of 1st Stage Boost	+463	+127.5
2nd Stage Ignition	-744	+ 63
Landing	0	-112

Design Loads

Conditions include ultimate flight loads plus tank pressure (either limit or ultimate, whichever is more critical). Moments are referenced to section centroid.

Figure 3.2-39

Design Loads (Cont.)

Condition	Ultimate Axial Load (10^{-3} lbs)	Ultimate Moment (10^{-6} in lbs)	Limit Tank Pressure (psig)	Temperature
Max βq	+385	+163	36.1	Upper Long.= 200°F Side Panel = 200°F Tank = -320°F
End of 1st Stage Boost	+650	+201	36.8	Upper Long.= 300°F Side Panel = 550°F Tank = -320°F
2nd Stage Ignition	-1,040	+ 52.3	36.1	Upper Long.= 300°F Side Panel = 550°F Tank = -320°F
Landing	0	-168	0	Upper Long.= 200°F Side Panel = 200°F Tank = 200°F

Internal Loads

Condition	Location	Ultimate Flight Loads (lb/in or lb)	Thermal Gradient Loads (lb/in or lb)	Tank Pressure Loads		Total Loads (Ultimate)
				Limit (lb/in or lb)	Ultimate (lb/in or lb)	
Max βq	1a	+ 3500	- 567	+1445	+2020	+4953 lb/in
	1b	+ 1395	+ 562	+1005	+1410	+3367 lb/in
	1c	- 703	+2180	+ 567	+ 794	+2271 lb/in
	2	- 3230	-2320	+ 730	+1020	-4820 lb/in
	3	-43100	-4330	+ 585	+ 820	-46845 lb
End of 1st Stage Boost	1a	+ 4450	-1220	+1470	+2060	+5290 lb/in
	1b	+ 1860	+ 930	+1025	+1425	+4215 lb/in
	1c	- 729	+3080	+ 576	+ 807	+3158 lb/in
	2	- 3720	-5070	+ 742	+1040	-8048 lb/in
	3	-51300	+2660	+ 630	+ 882	-48010 lb
2nd Stage Ignition	1a	+ 208	-1220	+1445	+2060	+1048 lb/in
	1b	- 466	+ 930	+1005	+1410	+1874 lb/in
	1c	- 1140	+3080	+ 567	+ 794	+2734 lb/in
	2	- 2840	-5070	+ 730	+1020	-7180 lb/in
	3	-26200	+2660	+ 585	+ 820	-22950 lb
Landing	1a	- 3290	0	0	0	-3290 lb/in
	1b	- 1125	0	0	0	-1125 lb/in
	1c	+ 1040	0	0	0	+1040 lb/in
	2	+ 3980	0	0	0	+3980 lb/in
	3	+48700	0	0	0	+48700 lb

Figure 3.2-39 (Continued)

Analysis of Lower Tank Skin

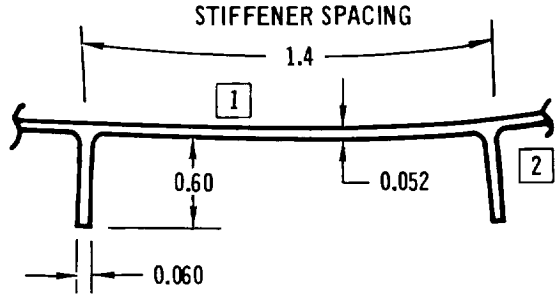

Material = 2021 - T81

t = .078 in

I/inch = .0026 in^4/in

N_{max} = -3290 lb/in ultimate
(Landing at T = 200°F)

	Room Temp	-320°F	200°F
F_{tu}	66,000 psi	82,200 psi	61,400 psi
F_{cy}	--------	74,500 psi	57,700 psi
E_c	--------	---------	9.8×10^6 psi

Hoop Tension Check (50 psi ultimate at 1g at time of filling tank)

$$f_t = \frac{p\ R}{t} = \frac{50\ (66)}{.052} = 63{,}500 \text{ psi}$$

Using Room Temperature properties

$$M.S = \frac{F_{tu}}{f_t} - 1 = \frac{66000}{63500} - 1 = \underline{\underline{.04}}$$

Local Buckling Check (Ref. 3-1)

Ele	b	t	b/t	$\sqrt{\frac{F_{cy}}{E}\ b/t}$	$\frac{F_{cc}}{F_{cy}}$	F_{cc}	bt	F_{cc} bt
1	1.4	.052	26.9	2.04	.79	45,500	.0728	3310
2	.626	.06	10.4	.798	.69	39,800	.0376	1490
							.1104	4800

$$F_{cc_{avg.}} = \frac{\Sigma\ F_{cc}\ bt}{\Sigma\ bt} = \frac{4800}{.1104} = 43{,}500 \text{ psi}$$

Figure 3.2-39 (Continued)

$$f_c = \frac{N}{t} = \frac{-3290}{.0777} = 42{,}300 \text{ psi}$$

$$M.S. = \frac{F_{cc}}{f_c} - 1 = \frac{43{,}500}{42{,}300} - 1 = \underline{\underline{.03}}$$

Overall Buckling Check

(Based on Hetenyi,"Beams on Elastic Foundation")

$$F_{cr} = \frac{2E}{r\ t} \sqrt{t_s\ I}$$

$$= \frac{2\ (9.8 \times 10^6)}{66\ (.0777)} \sqrt{.052\ (.0026)}$$

$$= 44{,}300 \text{ psi}$$

$$M.S. = \frac{F_{cr}}{f_c} - 1 = \frac{44{,}300}{42{,}300} - 1 = \underline{\underline{.05}}$$

Analysis of Upper Longeron

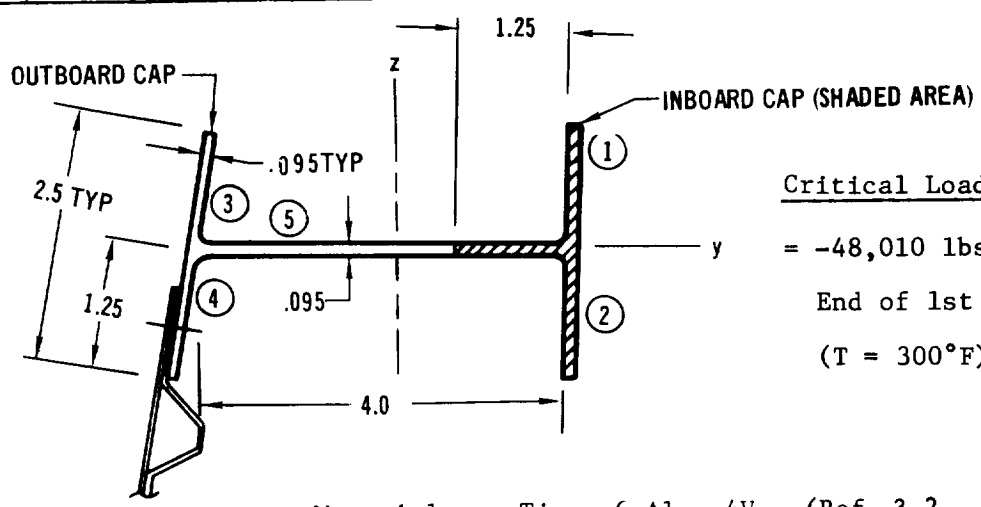

Critical Loading

= -48,010 lbs ultimate at End of 1st Stage Boost (T = 300°F)

Material = Ti 6 Al - 4V (Ref 3-2)

F_{cy} = 130,000 psi
E_c = 15.1×10^6 psi
} 300°F

Figure 3.2-39 (Continued)

Ele	b	t	b/t	$\sqrt{\frac{F_{cr}}{E}}\, b/t$	$\frac{F_{cc}}{F_{cy}}$	F_{cc}	bt	F_{cc} bt
1	1.25	.095	13.2	1.225	.48	62,400	.119	7430
2	1.25	.095	13.2	1.225	.48	62,400	.119	7430
3	1.25	.095	13.2	1.225	.48	62,400	.119	7430
4	1.25	.095	13.2	1.225	.48	62,400	.119	7430
5	4.0	.095	42.2	3.92	.46	59,800	.380	22700
							.856	52420

$$F_{cc_{avg.}} = \frac{\Sigma\, F_{cc}\ bt}{\Sigma\, bt} = \frac{52,420}{.856} = 61,200 \text{ psi}$$

For the inboard cap with $\frac{L'}{\rho} = \frac{20}{.588} = 34$

$F_c = 52,900$ psi (Ref. 3-1)

For the outboard cap with $\frac{L'}{\rho} = \frac{20}{1.68} = 11.9$

$F_c = 60,300$ psi

Thus, $P_a = F_{c_{inbd.}} A_{inbd.} + F_{c_{outbd.}} A_{outbd.}$

$= 52,900\ (.352) + 60,300\ (.495)$

$= 48,550$ lbs

$$M.S. = \frac{P_a}{P} - 1 = \frac{48,550}{48,010} - 1 = \underline{\underline{.01}}$$

Figure 3.2-39 (Continued)

Analysis of Typical Side Panel Corrugation

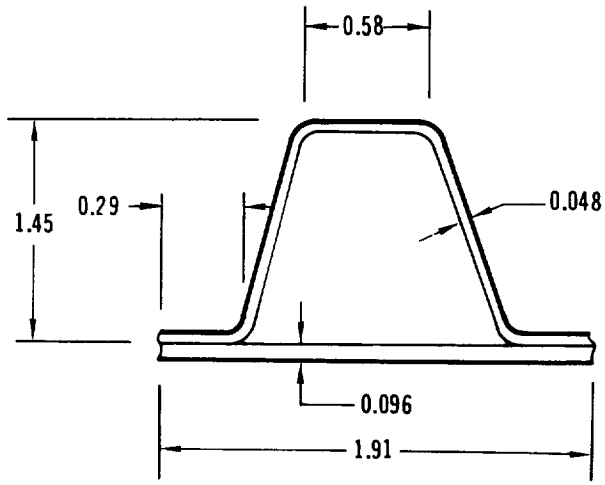

Geometry

I/cycle = .0988 in^4

A/cycle = .374 in^2

t = .151 in

Material = Ti 8 Al - 1Mo - 1V (Single Annealed) (Ref. 3-2)

F_{tu} = 116,000 psi
F_{ty} = 96,600 psi
E_c = 15.75 x 10^6 psi
at 550°F

Critical Condition = -8048 lb/in ultimate, Δp = 0 for condition End of 1st Stage Boost (T = 550°F)

The beam column equation used in the analysis is:

$$\left(\frac{P_{cr}}{F_{cc}A}\right)\left(\frac{P_a}{P_{cr}}\right)^2 - \left(\frac{P_{cr}}{F_{cc}\,A} + \frac{P_{cr}\;Y_o}{M_a} = \frac{M_o}{M_a} + 1\right)\left(\frac{P_a}{P_{cr}}\right) - \left(\frac{M_o}{M_a}\right) + 1 = 0$$

(Ref. 3-1)

The solution to this equation for given material properties, lateral pressures, and section geometry is programmed on the GE 420 computer (Program SHELLWHG).

For the above section:

N_{cr} = 8500 lb/in ultimate

$$M.S. = \frac{N_{cr}}{N} - 1 = \frac{8500}{8048} - 1 = \underline{\underline{.05}}$$

Figure 3.2-39 (Continued)

c. Bending/Shear Structure, Booster - The basic structural shell is the cylindrical tank stiffened as necessary to carry fuselage beam loads. Aluminum 2021-T81 is again used. Tanks are protected by TPS such that thermal stresses are not significant. Again, tank pressures establish minimum required skin gages. Except for aft fuselage, critical conditions are End of 1st Stage Boost on the upper shell and Landing for the lower shell. Aft structures, not including thrust structure, are critical for the Ground Wind condition. A typical analysis of the tank shell is shown in Figure 3.2-40 for the section at station 1581.

d. Thrust Structures - As previously described the more conventional thrust and tie down structural concepts are applicable to the booster fuselage shape and engine arrangement. Engines are supported by a conical skirt extension of the tank shell. Orbiter engines introduce thrust loads primarily into the upper fuselage structures where the longerons are principle local load carrying members. Tripod truss type thrust structures extending back from such local hard points are most adaptable. Engine thrust and gimbal moments superimpose and truss links are critical as beam columns. Critical tripod conditions occur in support of an individual engine when the remaining engine is out. A 10% thrust increment due to overspeed is used. Analysis of a major link is given in Figure 3.2-41.

e. Interstage Structures - Figure 3.2-42 illustrates load distribution in the orbiter. The single forward attachment is made on vehicle CL at station 753 bulkhead and the aft attachment at station 1410 bulkhead. The forward intercostal distributes drag load to the tank shell structure from station 753 back to the wing carry through. Therefore major fuselage bending and shear loads are introduced at the wing support frames in addition to the forward and aft bulkheads. Thus the wing carry through box also serves as fuselage redistribution structure during ascent.

Comparison of wing box design moments and shears for End of 1st Stage Boost and the 2.5g airplane condition is given in Figure 3.2-43. No beef-up is necessary other than in spar shear webs for the structure as designed for aircraft requirement.

The orbiter interstage tie intercostal is analyzed in Figure 3.2-44. Typical analysis of a fuselage bulkhead is illustrated in Figure 3.2-45 for the lower structure at station 1410.

BOOSTER FUSELAGE SECTION ANALYSIS - STATION 1581

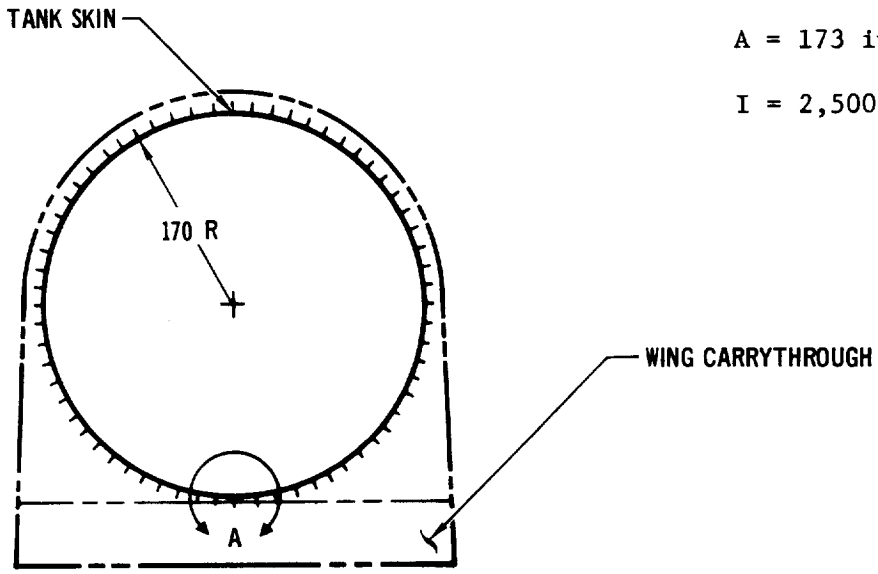

$A = 173\ in^2$

$I = 2{,}500{,}000\ in^4$

CHECK LOWER TANK SHELL

Limit Load (Landing = critical condition for lower shell)

M = -379,000,000 in lbs (Reference Figure 3.2-36)

Temperature = 200°F

Tank Pressure = 0.0 psig

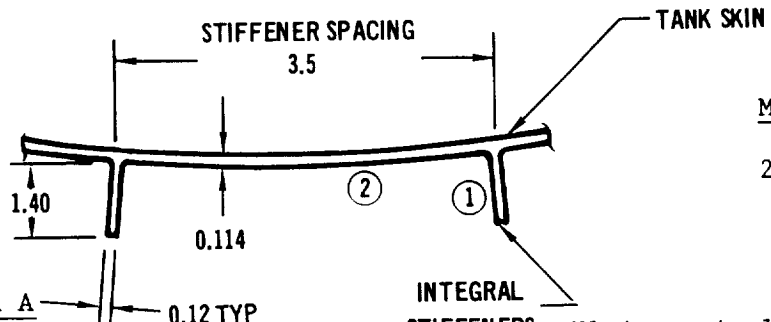

Section A
t = .162 in
I/inch = .0271 in^4/in

Material = 2021-T81

200°F $\begin{cases} F_{tu} = 61400 \text{ psi} \\ F_{cy} = 57700 \text{ psi} \\ E_c = 9.8 \times 10^6 \text{ psi} \end{cases}$

Ultimate Applied Load - $\frac{My}{I}\bar{t}$ =

$$= \frac{379{,}000{,}000\ (1.5)(.170)(.162)}{2{,}500{,}000}$$

= 6280 lbs/in ultimate compression

Figure 3.2-40

Local Buckling (Ref. 3-1)

Ele	b	t	b/t	$\sqrt{\frac{F_{cy}}{E}}$ b/t	Fcc/Fcy	Fcc	bt	Fcc bt
1	1.457	.12	12.1	.928	.60	34600	.175	6060
2	3.5	.114	30.7	2.35	.71	40800	.400	16320
							.575	22380

$$Fcc_{avg} = \frac{\Sigma Fccbt}{\Sigma bt} = \frac{22380}{.575} = 39000 \text{ psi}$$

$$fc = \frac{N}{t} = \frac{6280}{.162} = 38800 \text{ psi}$$

$$M.S. = \frac{Fcc}{fc} - 1 = \frac{39000}{38800} - 1 = \underline{\underline{0.0}}$$

Overall Buckling

$$F_{cr} = \frac{2E}{r\bar{t}} \sqrt{t_s I}$$ (Based on Hetenyi "Beams on Elastic Foundation")

$$= \frac{2(9.8 \times 10^6)}{170(.162)} \sqrt{.114(.0271)}$$

$$= 39500 \text{ psi}$$

$$M.S. = \frac{Fcr}{fc} - 1 = \frac{39500}{38800} - 1 = \underline{\underline{.02}}$$

Figure 3.2-40
(Continued)

ENGINE THRUST STRUT ANALYSIS

(Strut ③ on Upper Engine Support)

Orbiter Upper Engine Strut Geometry

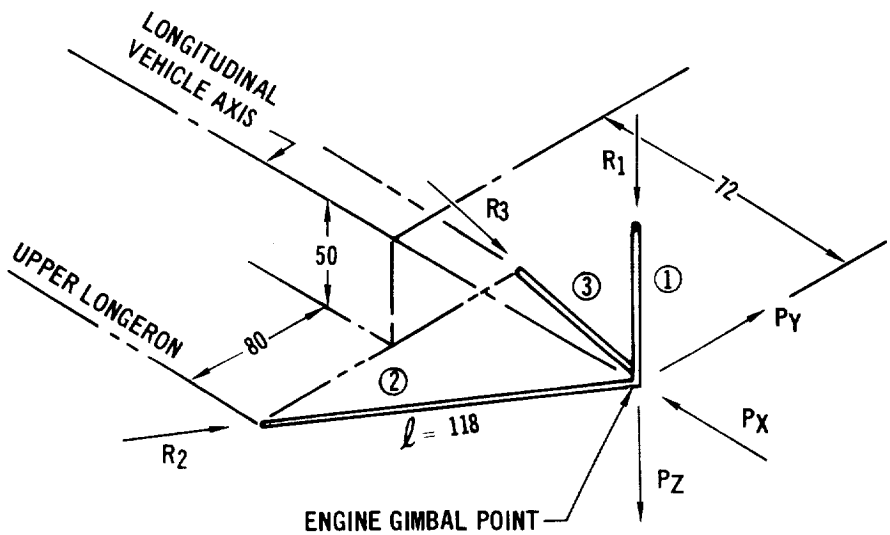

The maximum axial loading of strut ③ occurs with lower engine shut down, 10% overspeed on upper engine, and a gimbal angle of 12° up (5° nominal + 7° gimbal) and 1° left. For this condition, the loads are shown below:

Ultimate Thrust Loads					
P_x (lbs)	P_y (lbs)	P_z (lbs)	R_1 (lbs)	R_2 (lbs)	R_3 (lbs)
698000	12400	148000	336000	566800	585200

In addition to the above axial loads, an end moment of 1,880,000 in lb ultimate (based on engine actuator capability) can be superimposed.

Figure 3.2-41

Carrying 1/2 the moment on each of strut (2) and (3).

Strut (3) will have the following free body.

Ultimate Loads and Geometry (Temperature = 250°F)

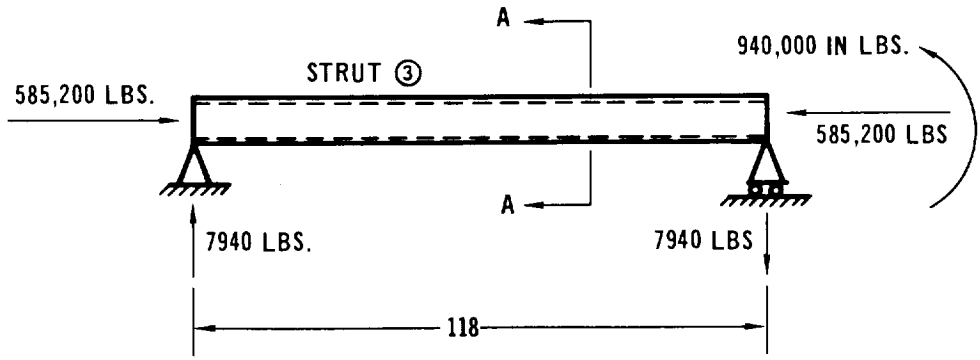

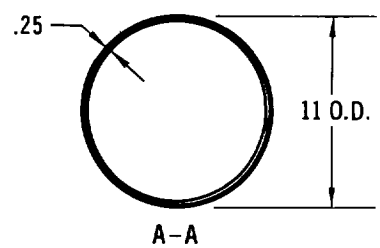

$A = 8.43 \text{ in}^2$
$I = 122 \text{ in}^4$
$L' = 118 \text{ in}$
$\rho = 3.8 \text{ in}$

Material = Ti 6Al-4V (Aged) (Ref. 3-2)

Properties at 250°F

$F_{tu} = 137{,}000$ psi

$F_{cy} = 131{,}000$ psi

$E_c = 15.4 \times 10^6$ psi

Local Buckling Check

$$F_{cr} = .3\, E \frac{t}{R} \quad \text{(Ref. 3-3)}$$

$$= .3\,(15.4 \times 10^6)\left(\frac{.25}{5.375}\right)$$

$$= 215{,}000 \text{ psi} \Rightarrow \text{no local buckling}$$

Figure 3.2-41 (Continued)

Beam Column Check

For Pure Axial load. (Ref. 3-1)

$$P_{cr} = F_c A = A \left[F_{cc} - \frac{F_{cc}^2}{4\pi^2 E} \left(\frac{L'}{\rho}\right)^2\right]$$

$$= 8.43 \left[137{,}000 - \frac{(137{,}000)^2}{4\pi^2 \ (15.4 \times 10^6)} \left(\frac{118}{3.8}\right)^2\right]$$

$$= 900{,}000 \text{ lbs}$$

For Pure Moment (Ref. 3-1)

$$M_{a_{plastic}} = 2Q_m F_{rb}$$

$$= 2 \ [2 \ R^2 \ t] \ F_{rb}$$

$$= 2 \ (2) \ (5.375)^2 \ (.25) \ (137{,}000)(.975)$$

$$= 3{,}860{,}000 \text{ in lb}$$

The applied moment will be amplified by beam column deflections.

$$M = M_o + Py \quad \text{(Ref. 3-1)}$$

where

$$y = \frac{y_o}{1 - \alpha}$$

For

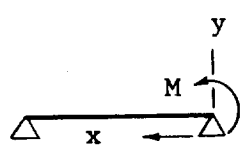

$$y_o = \frac{M}{6 \ EI} \left(3 \ x^2 - \frac{x^3}{\ell} - 2\ell \ x\right) \quad \text{(Ref. 3-3)}$$

At the point of max. beam column moment, $x \approx \frac{\ell}{4}$

$$yo = \frac{940{,}000}{6(15.4 \times 10^6)(122)} \left[3(29.6)^2 - \frac{(29.6)^3}{118} - 2(118.6)(29.6)\right]$$

$$= .385 \text{ in}$$

$$\alpha = \frac{P}{P_{cr}} = \frac{585{,}200}{900{,}000} = .65$$

$$M_{x = \frac{\ell}{4}} = M_o + \frac{Py_o}{1-\alpha}$$

$$= .75 \ (940{,}000) + \frac{585{,}200 \ (.385)}{1 - .65} = 1{,}350{,}000 \text{ in lb}$$

Figure 3.2-41 (Contunied)

Using the interaction equation

$$R_b + R_c = 1$$

Where

$$R_b = \frac{M}{M_a} = \frac{1,350,000}{3,860,000} = .35$$

$$R_c = \frac{P}{P_{cr}} = \frac{585,200}{900,000} = .65$$

$$M.S. = \frac{1}{R_b + R_c} - 1$$

$$= \frac{1}{.35 + .65} - 1 = \underline{\underline{0.0}}$$

Figure 3.2-41
(Continued)

INTERSTAGE LOAD DISTRIBUTION – ORBITER

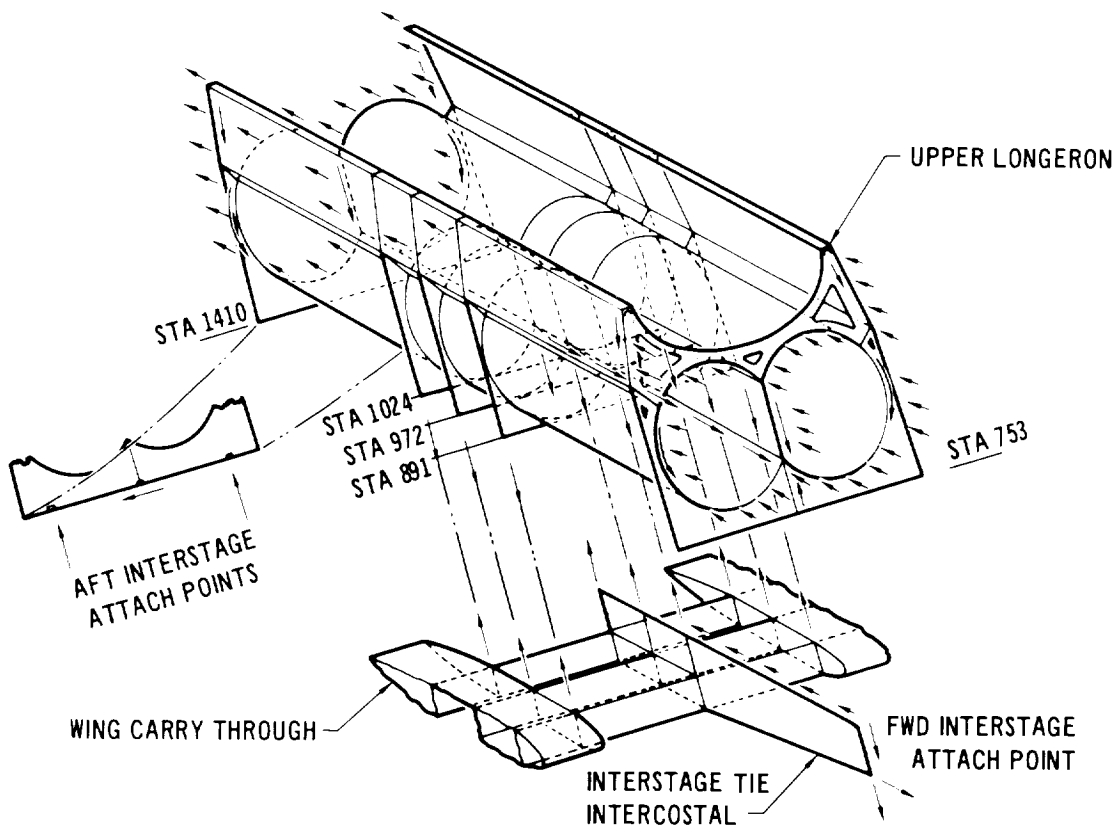

Figure 3.2-42

WING CARRY-THRU STRUCTURAL LOADS COMPARISON (ORBITER)

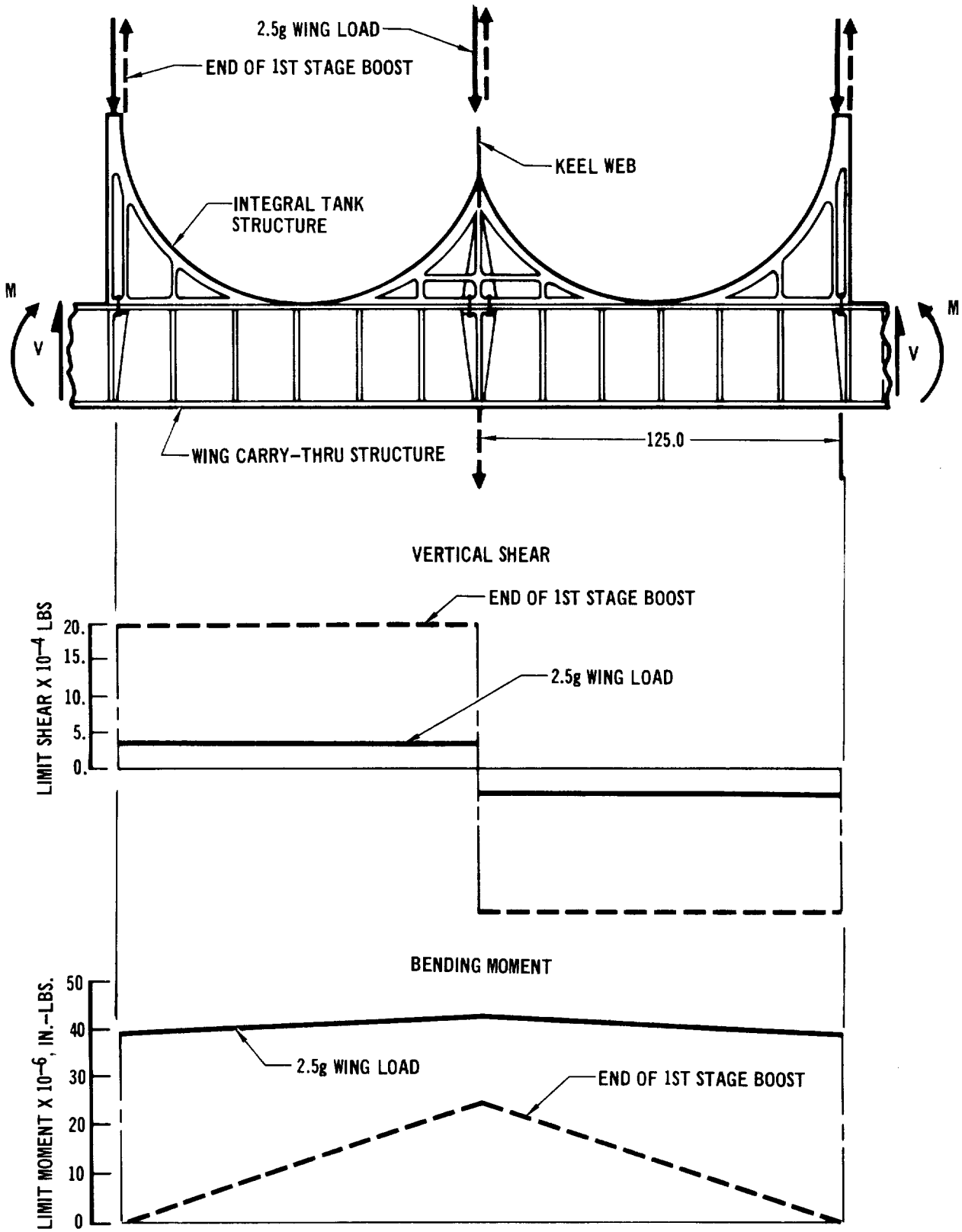

Figure 3.2-43

ORBITER INTERCOSTAL ANALYSIS - FORWARD INTERSTAGE ATTACHMENT

Limit Applied Loads - (Ref. Figure 3.2-33)

Critical Condition: End of 1st Stage Boost

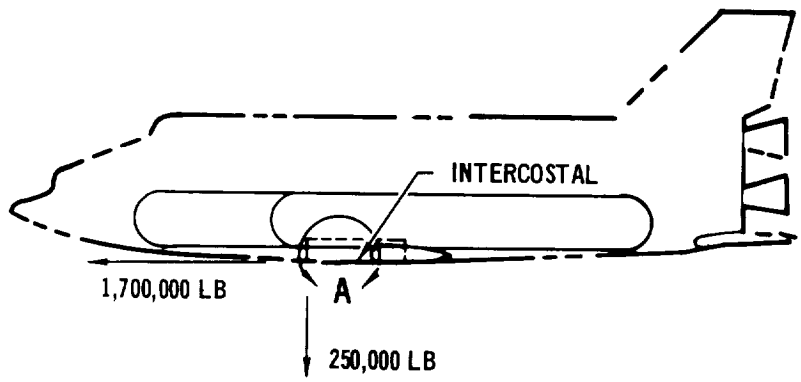

Design Loads (Ultimate)

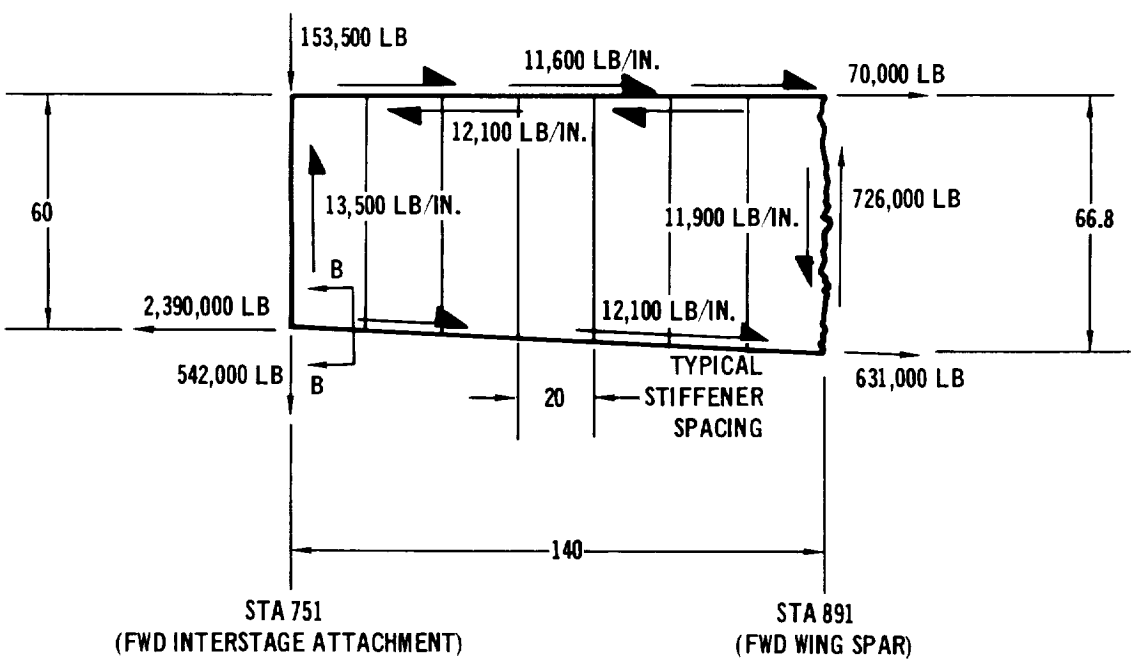

SECTION A

Figure 3.2-44

Check Lower Cap

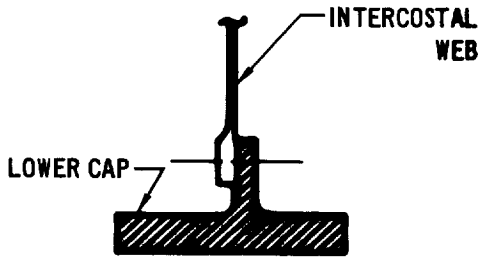

B–B

(Temperature, T = 90°F)

Material: Ti - 6Al-4V

F_{tu} = 160,000 psi (Ref. 3-2)

Section Property: A = 15. in^2

Load: P = 2,390,000 lbs

Stress: $f_t = P/A = \frac{2,390,000}{15} = 159,000$ psi

$$M.S. = \frac{F_{tu}}{f_t} - 1 = \frac{160,000}{159,000} - 1 = \underline{\underline{.01}}$$

Check Typical Shear Web Bay (At Room Temperature)

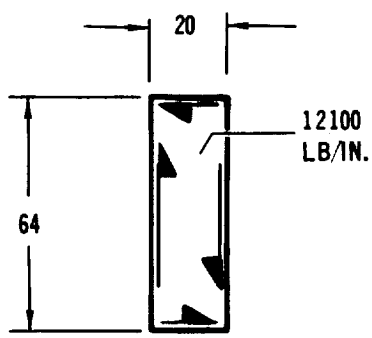

TYPICAL SHEAR WEB BAY

Material: 7178-T6 Alum. (Ref. 3-2)

Section Property: t = .35 in.

Shear Flow: q = 12,100 lbs/in.

$$\frac{qd^2}{t^3} = \frac{12,100(20)^2}{(.35)^3} = 1.125(10)^8 \text{ psi}$$

(Ref. 3-4)

$$\frac{he}{d} = \frac{64}{20} = 3.2$$

T_a = 34,600 psi (T/T_{cr} = 1.9)

$$T = q/t = \frac{12,100}{.35} = 34,600 \text{ psi}$$

$$M.S. = \frac{T_a}{T} - 1. = \frac{34,600}{34,600} - 1. = \underline{\underline{0.0}}$$

Figure 3.2-44
(Continued)

ORBITER FRAME ANALYSIS - AFT INTERVEHICLE TIE (STATION 1410)

Limit Applied Loads
(Ref. Figure 3.2-33)

Critical Condition:
Max βq

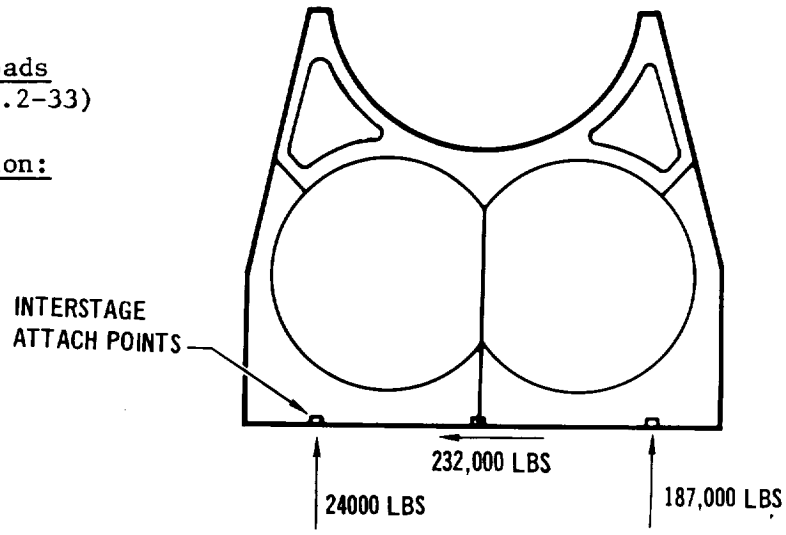

Design Loads (Ultimate)
For inflection points at the tank sides and assuming uniform tank shear flow, the lower portion of the frame is balanced as shown below.

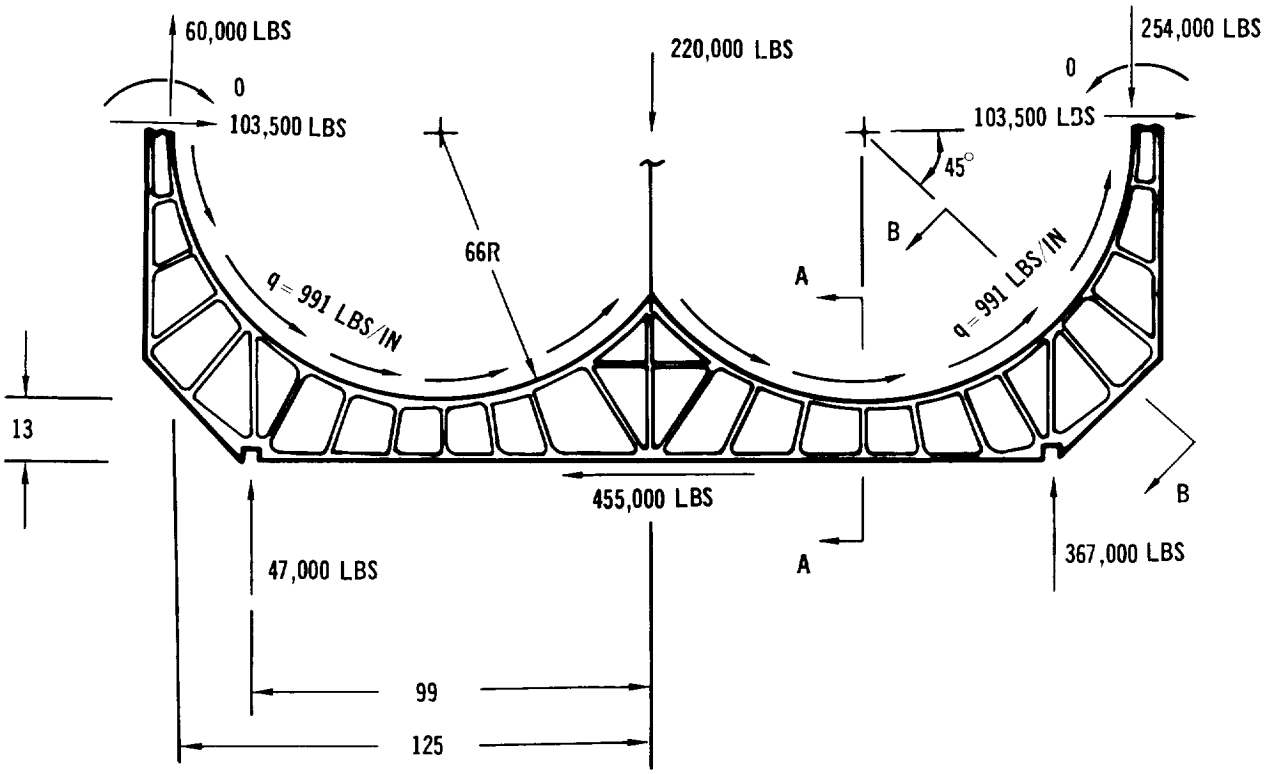

Figure 3.2-45

Section A-A

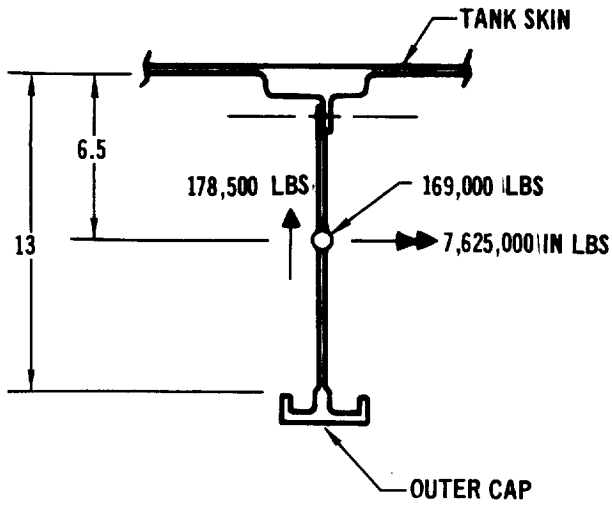

Outer Cap load = 496,000 lbs comp.
Inner Cap load = 675,000 lbs tension

Check Outer Cap

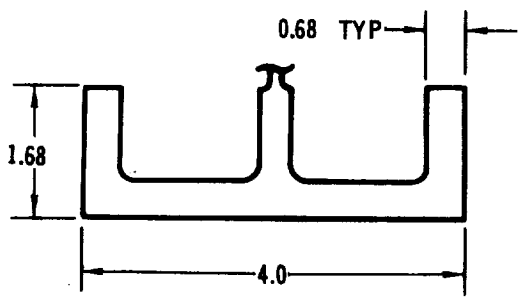

Material = Ti 6Al-4V (Ref. 3-2)

F_{tu} = 160,000 psi
F_{ty} = 150,000 psi
E_c = 16.4 x 10^6 psi
} 90°F

Section Properties

A = 4.76 in^2
I_y = 7.36 in^4
ρ = 1.24 in

Ele	b	t	b/t	$\sqrt{\frac{F_{cy}}{E}}\ b/t$
1	1.34	.68	1.97	.188
2	1.68	.68	2.47	.236

$\Rightarrow F_{cc} = F_{tu}$ = 160,000 psi
(Ref 3-1)

Assuming lateral support from gussets every 45 in ,

$$\frac{L'}{\rho} = \frac{45}{1.24} = 36.4$$

Figure 3.2-45
(Continued)

$$F_c = F_{cc} - \frac{(F_{cc})^2}{4\pi^2 E}\left(\frac{L'}{\rho}\right)^2 \quad \text{(Ref. 3-1)}$$

$$= 160{,}000 - \frac{(160{,}000)^2}{4\pi^2(16.4 \times 10^2)}(36.4)$$

$$= 108{,}000 \text{ psi}$$

$$f_c = \frac{P}{A} = \frac{496{,}000}{4.76} = 104{,}500 \text{ psi}$$

$$MS = \frac{F_c}{f_c} - 1 = \frac{108{,}000}{104{,}500} - 1 = \underline{\underline{.03}}$$

Section BB

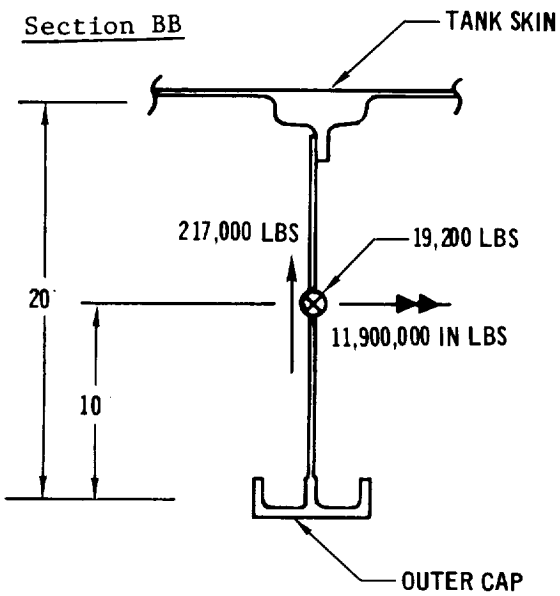

Outer Cap load = 604,000 lbs comp.
Inner Cap load = 587,000 lbs tension

Check Outer Cap

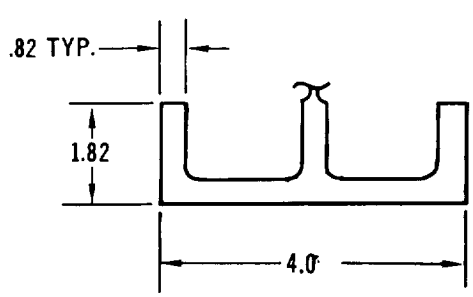

Material = Ti 6Al - 4V (Ref. 3-2)

F_{tu} = 160,000 psi
F_{ty} = 150,000 psi
E = 16.4 x 10^6 psi
} 90°F

Section Properties

A = 5.74 in^2
I = 8.52 in^4
ρ = 1.22 in

Figure 3.2-45
(Continued)

Assuming lateral support from gussets every 45 in

$$\frac{L'}{\rho} = \frac{45}{1.22} = 36.9$$

$$F_c = F_{cc} - \frac{(F_{cc})^2}{4\pi^2 E} \left(\frac{L'}{\rho}\right)^2$$

$$= 160{,}000 - \frac{(160{,}000)^2}{4\pi^2 \ (16.4 \times 10^6)} \ (36.9)^2$$

$$= 106{,}300 \text{ psi}$$

$$f_c = \frac{P}{A} = \frac{604{,}000}{5.74} = 105{,}000 \text{ psi}$$

$$\text{M.S.} = \frac{F_c}{f_c} - 1 = \frac{106{,}300}{105{,}000} - 1 = \underline{\underline{.01}}$$

Figure 3.2-45 (Continued)

Aft attach loads for the booster are supported on the frame at station 1223. The forward attach point is at station 566 where the bulkhead is also utilized to support the nose gear. The interstage drag intercostal runs to the jet engine support bulkhead at station 391. In both the orbiter and booster the drag load applies tension stresses rather than compression to the M.L. caps of the intercostals.

3.2.4.2 Fixed Lifting Surfaces - The main box structures are of conventional design and arrangement. HCF insulation is bonded directly to the lower surfaces of the wing and horizontal tail allowing maximum skin temperatures of 500°F. Titanium 6Al-4V is used for good strength efficiency at temperature. Integrally stiffened skin panels similar to fuselage tank shell structures provide maximum utilization of surface structures for beam bending strength.

The hot L.E. structure, however, is not conventional. External HCF is not used because of the high temperatures on L.E. surfaces and associated poor reusability. Carbon/carbon materials are being developed which offer a considerable weight advantage over the dense hot metals. The present concept is shown in Figure 3.2-46. A honeycomb sandwich supports L.E. air pressures. Replaceable slippers form the lower M.L. where high temperatures (3090°F) result in maximum material deterioration by oxidation. Analysis of the honeycomb sandwich is given in Figure 3.2-47 for maximum surface pressures encountered in aircraft mode and using preliminary material properties presently available.

REPLACEABLE "SLIPPER" LEADING EDGE CONSTRUCTION
Slipper Designed for 10 Flights

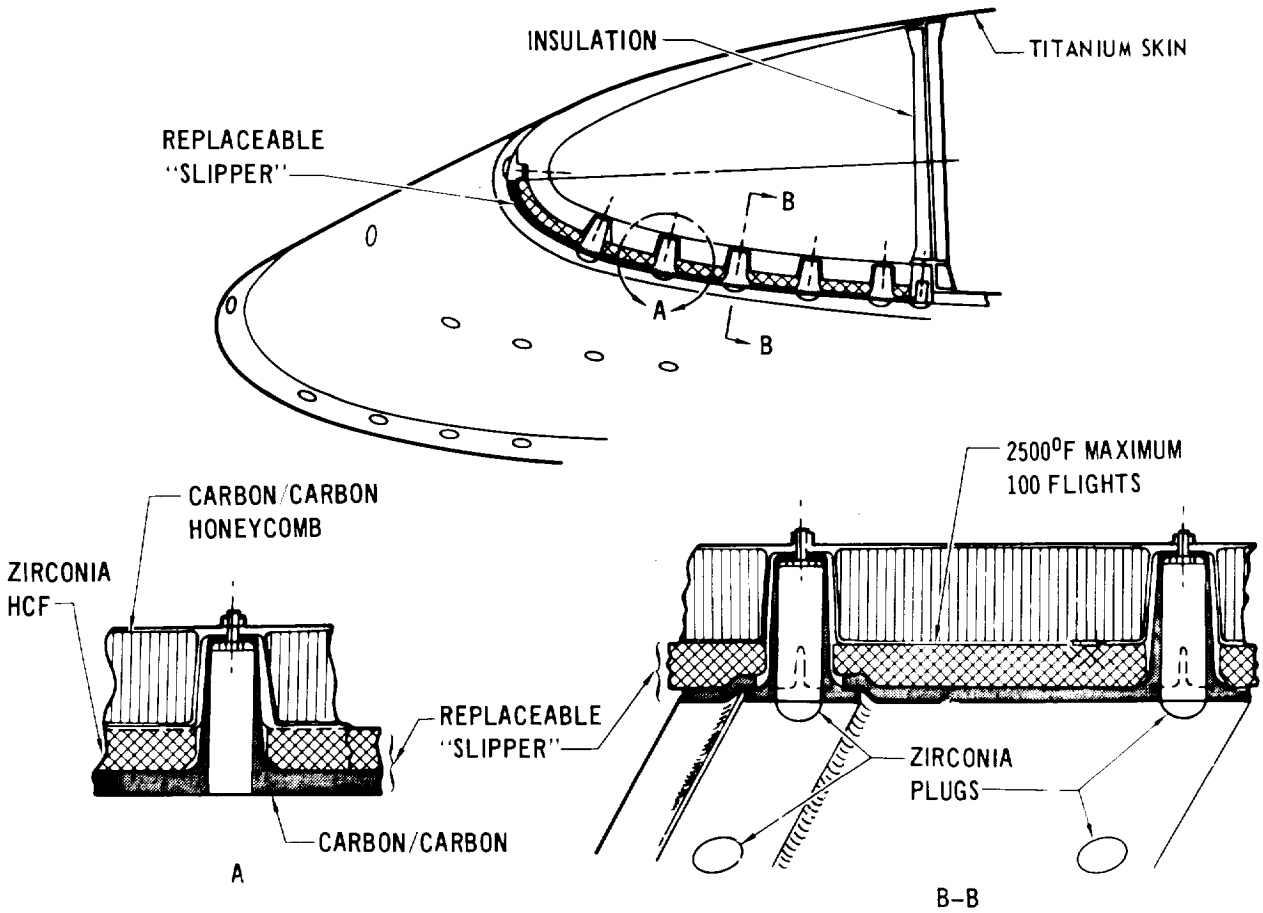

Figure 3.2–46

ORBITER LEADING EDGE ANALYSIS (Section at 1/4 SPAN)

Limit Loads - Critical condition = 2.5 g's at M = .5

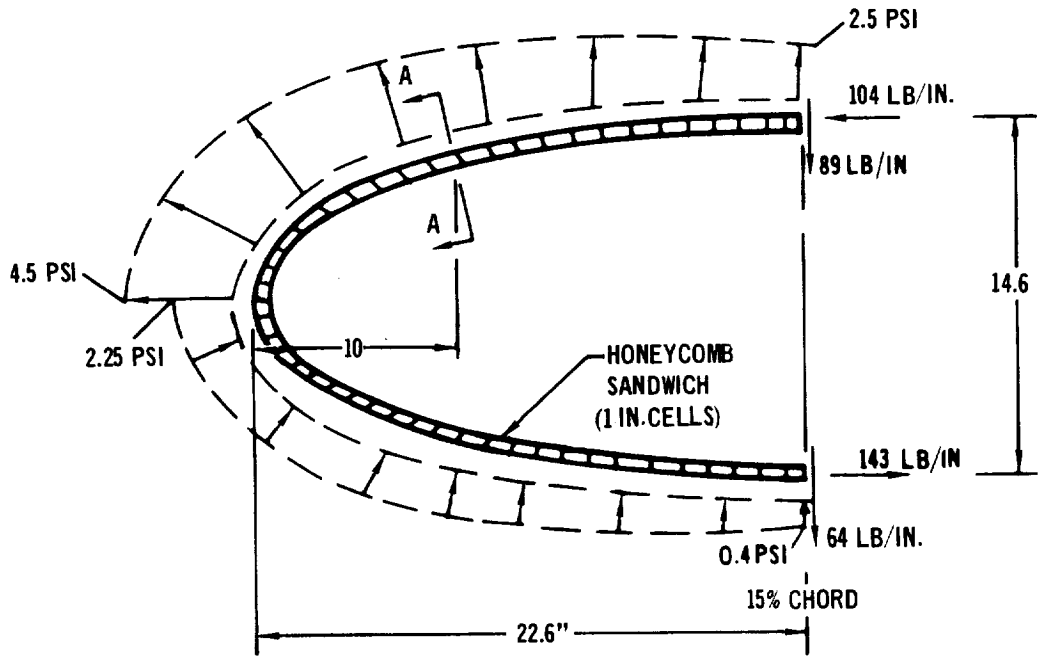

Check Section A-A (Max Bending Section)

Ultimate Loads

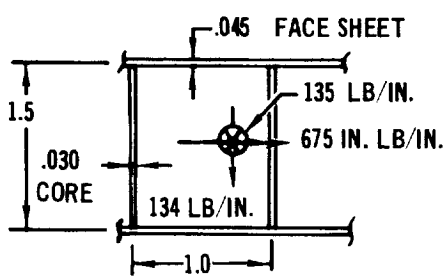

SECTION A-A

Predicted Material Properties

Carbon/Carbon
(Room Temperature to 3000°F)

F_{cy} = 14,000 psi
F_{tu} = 11,000 psi
E = 3.4×10^6 psi

} Face Sheet

Core Shear Strength = 90 psi

Core Shear

$$f_s = \frac{134}{1.5} = 89.4 \text{ psi}$$

$$M.S. = \frac{90}{89.4} - 1 = \underline{\underline{.01}}$$

Figure 3.2-47

Bending

Tension Face Sheet

$$f_t = \frac{M}{ht} - \frac{P}{2t}$$

$$= \frac{675}{1.5\ (.045)} - \frac{135}{2\ (.045)}$$

$$= 8{,}490 \text{ psi} \quad \text{Ult}$$

$$\text{M.S.} = \frac{11{,}000}{8{,}490} - 1 = \underline{\underline{.29}}$$

Compression Face Sheet

Intercell Buckling (Ref. 3-5)

$$F_c = .75\ E_f \left(\frac{tf}{s}\right)^{3/2}$$

$$= .75\ (3.4 \times 10^6) \left(\frac{.045}{1.2}\right)^{3/2}$$

$$= 18{,}300 \text{ psi}$$

Greater Than F_{cy},

Therefore Use $F_c = F_{cy} = 14{,}000$ psi

$$f_c = \frac{M}{ht} + \frac{P}{2t}$$

$$= \frac{675}{1.5\ (.045)} + \frac{135}{2\ (.045)}$$

$$= 11{,}510 \text{ psi}$$

$$\text{M.S.} = \frac{14{,}000}{11{,}510} - 1 = \underline{\underline{.22}}$$

Figure 3.2-47 (Continued)

3.2.4.3 Thermal Protection System Structures - TPS structures support surface pressures and transmit the loads to the fuselage shell frames or rings. Hot metal shingles and HCF insulated fiberglass shingles were sized for weight comparison. Predicted temperatures and pressures for metal shingles are given in Figure 3.2-48. Maximum temperatures are the basis for choice of metal used whereas maximum loading conditions are critical for sizing. Predicted temperatures and pressures for fiberglass shingles are given in Figure 3.2-49. HCF insulation is sufficient to limit maximum bondline (HCF/fiberglass) temperature at a maximum adhesive allowable of 500°F. Variation of temperature and pressure during launch and reentry are given in Figures 3.2-50 and 3.2-51.

Surface panels are simply supported by continuous lateral beams spaced at 20 inch intervals and in the plane of fuselage frames. Links spaced at 24 inch intervals along the beams tie the shingles to the fuselage frames.

Stiffness of shingles is considered in addition to strength. Deflections are limited to avoid high local heating and temperature rise. The fiberglass panels are most sensitive because of low material modulus of elasticity. For the study maximum panel deflection relative to the lateral beams and maximum beam deflection relative to the links are each limited to 0.5 inch. The maximum possible combined deflection is 1.0 inch. Generally, the metal shingles and support structure are critical for strength and the structures utilizing HCF are designed by strength and stiffness.

Weights based on various surface pressure levels are given in Figure 3.2-52 and 3.2-53 for fiberglass and metal shingle structures (TPS insulation not included) respectively. Metal structural weights are for Rene' 41 which is most generally applicable for the orbiter.

Beaded shingles are shown to be the lightest concept for metal panels. The weight of structures for a fiberglass shingle is approximately the same. The smooth surfaced metal construction using a skin stiffened by internal corrugations results in heaviest structural weight.

The present vehicle skin concept is smooth over forward fuselage, bottom fuselage and the lifting surfaces (wing and empennage) where aerodynamic heating is critical. Beaded panels are utilized primarily over remaining fuselage areas of the booster using titanium for maximum efficiency at predicted temperatures.

Typical analyses of Rene' 41 and fiberglass shingle TPS structures are given in Figures 3.2-54 and 3.2-55.

ORBITER FUSELAGE TEMPERATURES AND PRESSURES FOR METALLIC SHINGLES

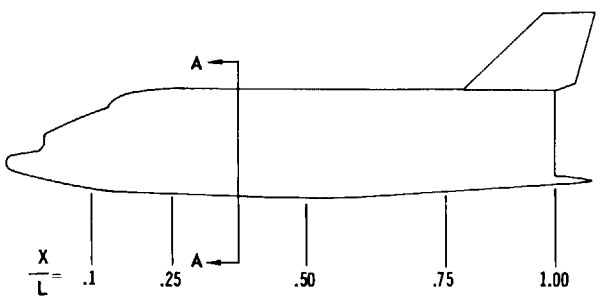

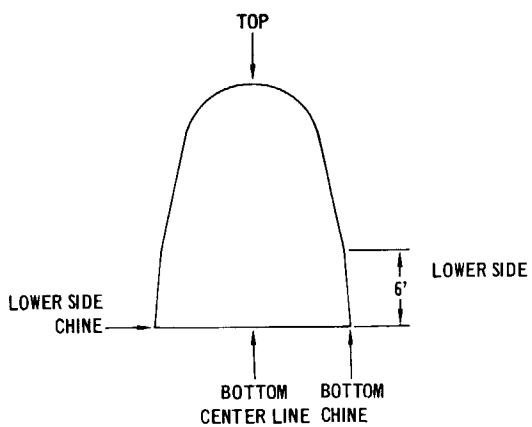

SECTION A–A

*NOTE: POSITIONS FOR TEMPERATURES ARE GIVEN AS:
1) BOTTOM – BOTTOM CENTER LINE/BOTTOM CHINE
2) LOWER SIDE – SIX FT ABOVE CHINE/LOWER CHINE

MISSION PHASE	LOCATION	X/L	MAX TEMPERATURE CONDITION		MAX PRESSURE CONDITION	
			* TEMPERATURE	ULT. PRESSURE	TEMPERATURE	ULT. PRESSURE
LAUNCH	BOTTOM – MOLD LINE	.10	690/810	.28	140°	1.4
		.25	620/910	1.28	75°	8.4
		.50	575/695	.63	75°	4.5
		.75	550/650	0	75°	0
		1.00	525/625	0	75°	0
	LOWER SIDE – MOLD LINE	.10	700/810	.28	140°	1.4
		.25	690/710	.11	75°	.77
		.50	575/675	.06	75°	.42
		.75	550/650	.01	75°	.10
		1.00	515/625	0	75°	0
	TOP-MOLD LINE	.10	1300	.21	140°	1.12
		.25	780	.09	75°	.62
RE-ENTRY	BOTTOM – MOLD LINE	.10	1680/1910	.14	300°	.48
		.25	1510/1720	.14	270°	.48
		.50	1350/1560	.14	240°	.48
		.75	1330/1495	.14	230°	.48
		1.00	1330/1450	.14	230°	.48
	LOWER SIDE – MOLD LINE	.10	850/1140	0	145°	0
		.25	850/1140	0	145°	0
		.50	1100/1420	0	145°	0
		.75	850/1140	0	145°	0
		1.00	850/1140	0	145°	0
	TOP SIDE – MOLD LINE	.10	720°	0	130°	0
		.25	590°	0	110°	0
CRUISE	BOTTOM– MOLD LINE	.1	200°	1.4	75°	1.4
		.25	200°	.7	75°	.7
		.50	200°	1.4	75°	1.4
		.75	200°	0	75°	0
		1.0	200°	0	75°	0
	LOWER SIDE – MOLD LINE	.1	200°	.7	75°	.7
		.25	200°	.35	75°	.35
		.50	200°	.7	75°	.7
		.75	200°	0	75°	0
		1.0	200°	0	75°	0
	TOP SIDE– MOLD LINE	.10	200°	.7	75°	.7
		.25	200°	.35	75°	.35

Figure 3.2–48

FOLDOUT FRAME 2

ORBITER FUSELAGE TEMPERATURES AND PRESSURES FOR FIBERGLASS/HCF SHINGLES

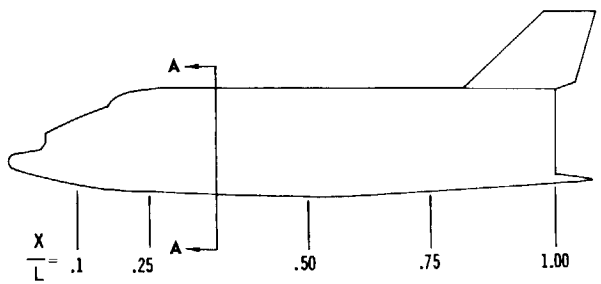

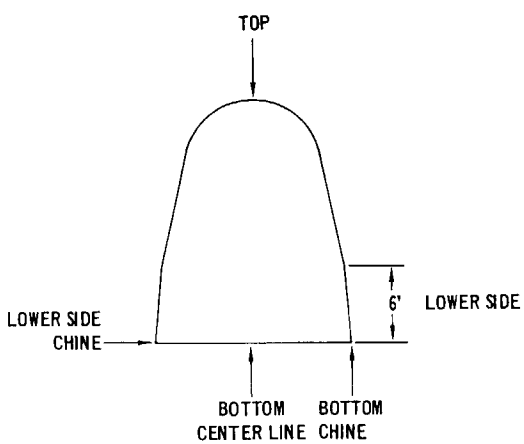

SECTION A–A

MISSION PHASE	LOCATION	X/L	BOND LINE TEMPERATURE	ULTIMATE PRESSURE
LAUNCH	BOTTOM-HCF BOND LINE	.1	90	1.4
		.25	90	8.4
		.50	90	4.5
		.75	90	0
		1.0	90	0
	LOWER SIDE-HCF BOND LINE	.1	90	1.4
		.25	90	.77
		.50	90	.42
		.75	90	.10
		1.0	90	0
	TOP-HCF BOND LINE	.1	90	1.12
		.25	90	.62
RE-ENTRY (MAXIMUM TEMPERATURE AND PRESSURE ASSUMED TO OCCUR AT THE SAME TIME.)	BOTTOM-HCF BOND LINE	.10	450	.48
		.25	450	.48
		.50	450	.48
		.75	450	.48
		1.00	450	.48
	LOWER SIDE-HCF BOND LINE	.10	450	0
		.25	450	0
		.50	450	0
		.75	450	0
		1.00	450	0
	TOP-HCF BOND LINE	.1	450	0
		.25	450	0
CRUISE	BOTTOM-HCF BOND LINE	.1	500	1.4
		.25	500	.7
		.50	500	1.4
		.75	500	0
		1.00	500	0
	LOWER SIDE-HCF BOND LINE	.10	500	.7
		.25	500	.35
		.50	500	.7
		.75	500	0
		1.00	500	0
	TOP-HCF BOND LINE	.10	500	.7
		.25	500	.35

Figure 3.2–49

FOLDOUT FRAME 1

FOLDOUT FRAME 2

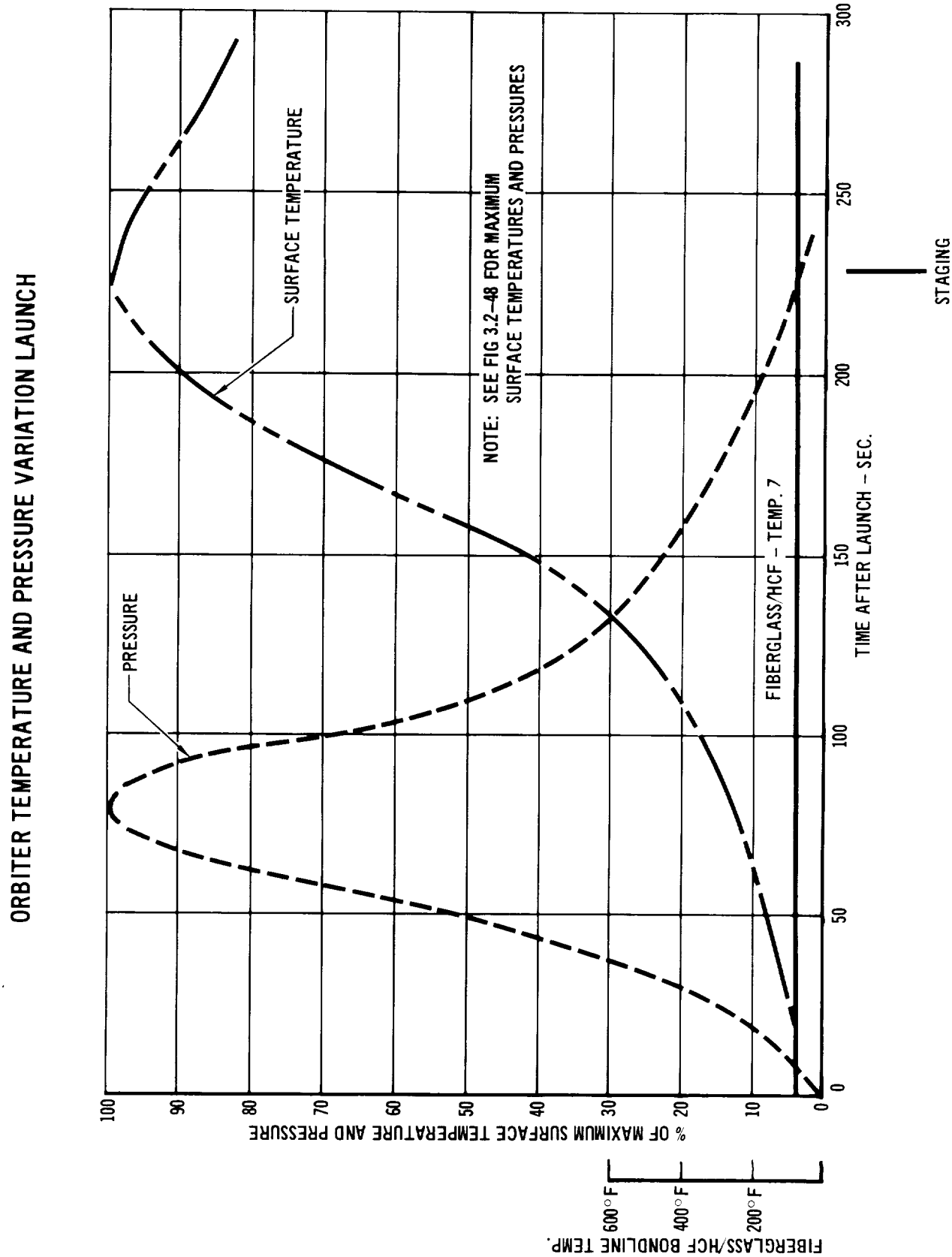
ORBITER TEMPERATURE AND PRESSURE VARIATION LAUNCH
PRESSURE
SURFACE TEMPERATURE
NOTE: SEE FIG 3.2-48 FOR MAXIMUM SURFACE TEMPERATURES AND PRESSURES
FIBERGLASS/HCF - TEMP. 7
STAGING
TIME AFTER LAUNCH - SEC.
0
50
100
150
200
250
300
% OF MAXIMUM SURFACE TEMPERATURE AND PRESSURE
0
10
20
30
40
50
60
70
80
90
100
FIBERGLASS/HCF BONDLINE TEMP.
200°F
400°F
600°F

Figure 3.2-50

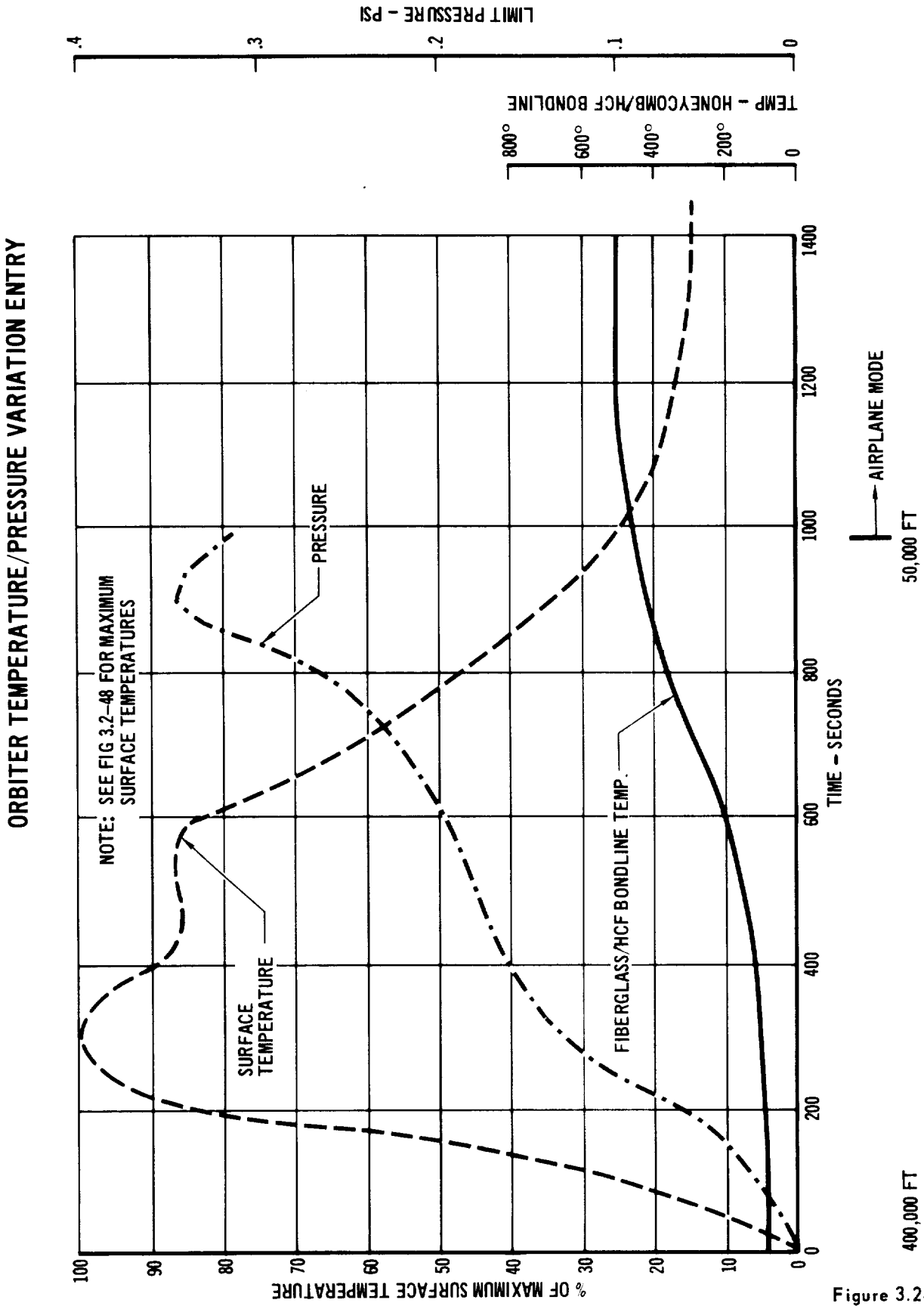
ORBITER TEMPERATURE/PRESSURE VARIATION ENTRY
NOTE: SEE FIG 3.2-48 FOR MAXIMUM SURFACE TEMPERATURES
PRESSURE
SURFACE TEMPERATURE
FIBERGLASS/HCF BONDLINE TEMP.
% OF MAXIMUM SURFACE TEMPERATURE
100
90
80
70
60
50
40
30
20
10
0
TIME - SECONDS
0
200
400
600
800
1000
1200
1400
AIRPLANE MODE
50,000 FT
400,000 FT
TEMP - HONEYCOMB/HCF BONDLINE
800°
600°
400°
200°
0
LIMIT PRESSURE - PSI
.4
.3
.2
.1
0

Figure 3.2-51

FIBERGLASS HONEYCOMB/HCF TPS STRUCTURAL WEIGHTS

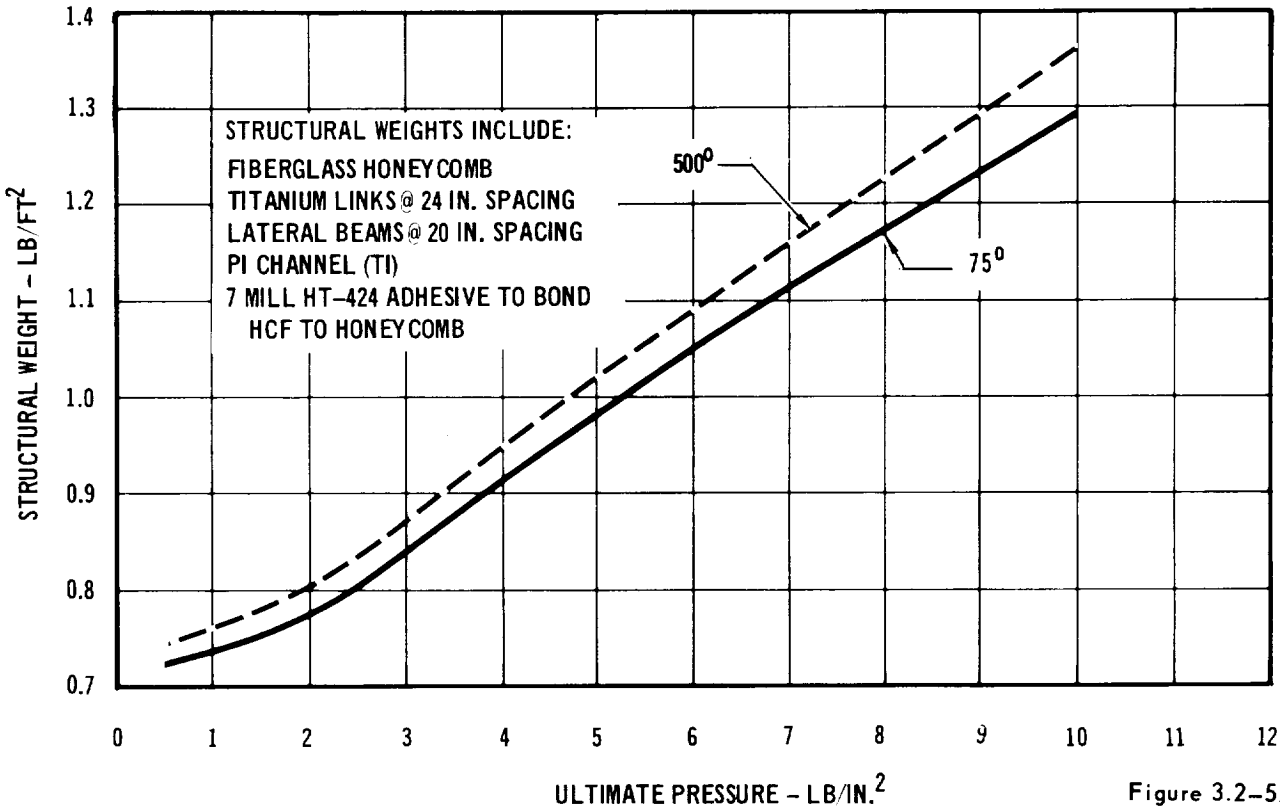

Figure 3.2–52

RENE´41 TPS STRUCTURAL WEIGHTS AT 75°F

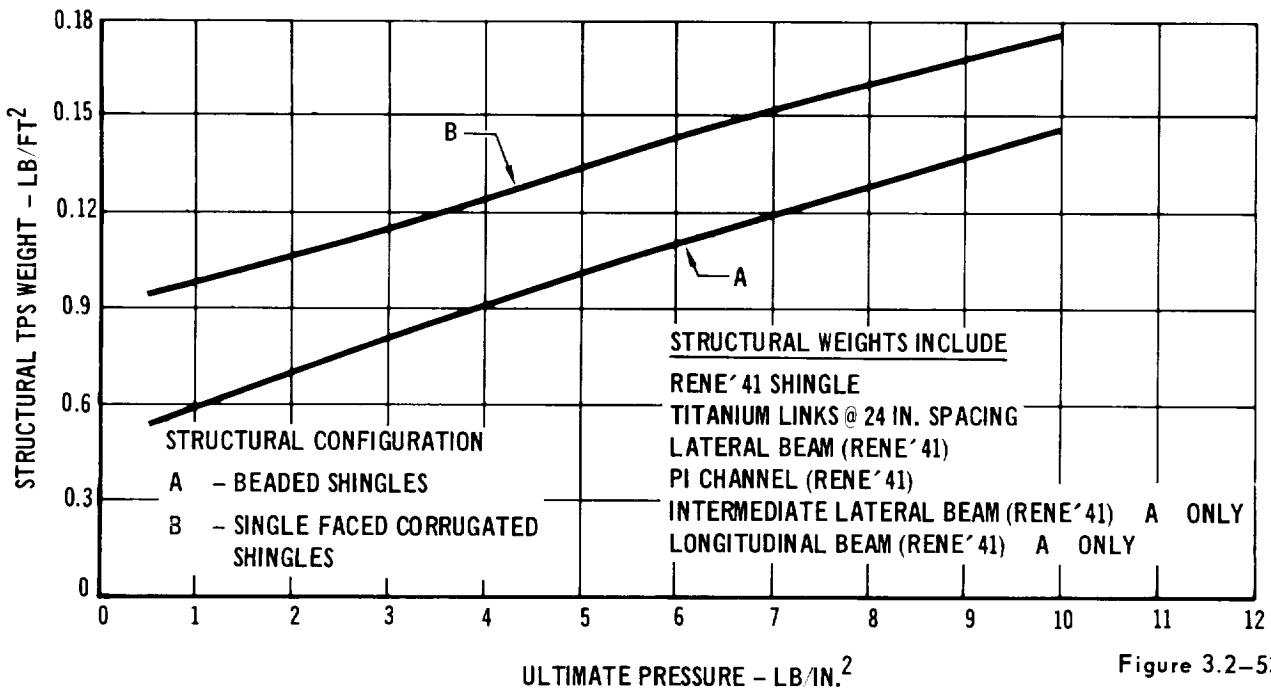

Figure 3.2–53

CORRUGATED RENE' 41 BEAM:

Design Condition: p = 8.4 psi ult at 75°F at Station X/L = .25

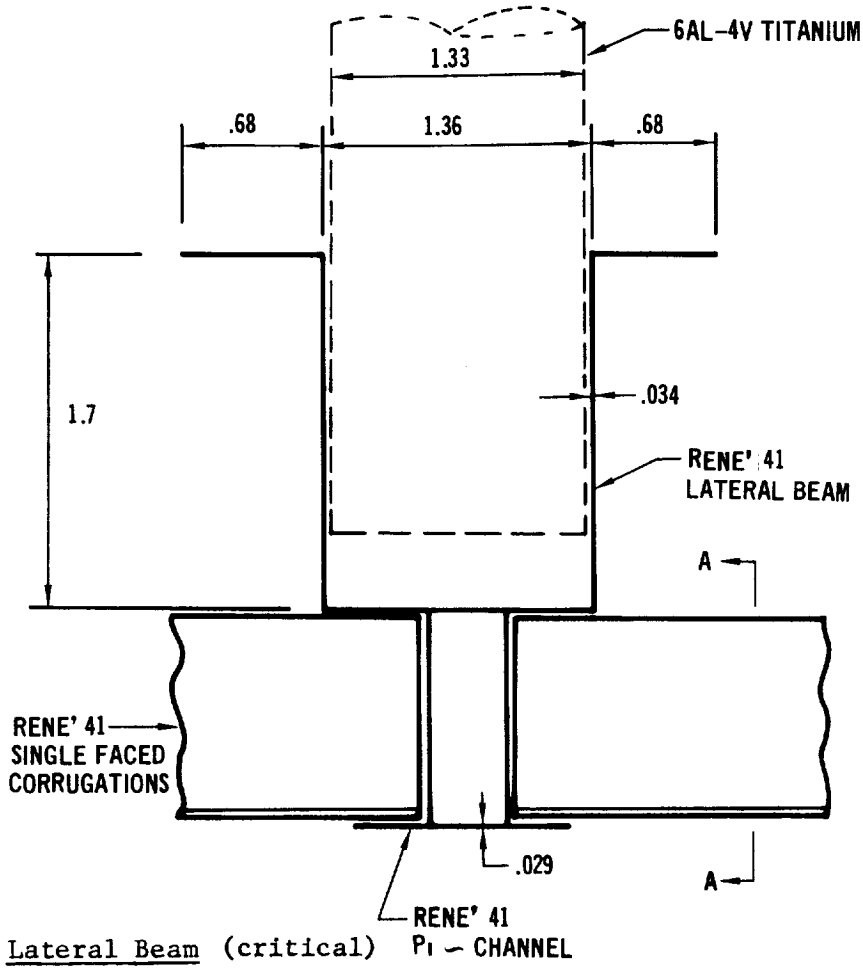

Lateral Beam (critical)

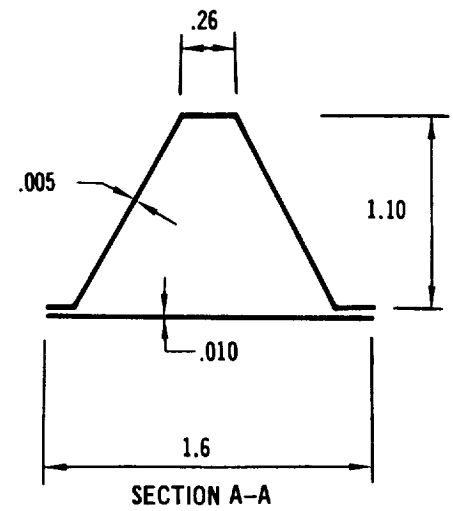

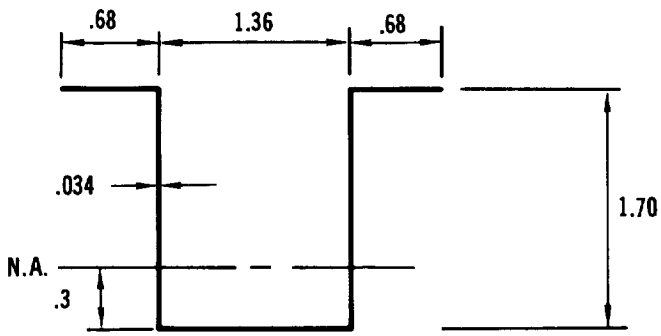

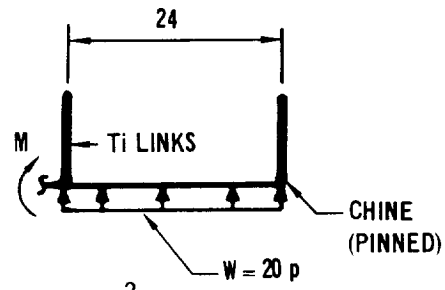

Material Properties (Ref. 3-2)

RENE' 41 at 75°F
F_{tu} = 170,000 psi
F_{cy} = 130,000 psi
E = 31.6 x 10^6 psi

$$M = \frac{WL^2}{8}$$
$$= 12,100 \text{ in. lb}$$

$$I = 612 \times 10^{-4} \text{ in}^4$$

Figure 3.2-54

Allowable Moment (Ref.3-1)

$$\sqrt{\frac{Fcy}{E}} = \sqrt{\frac{130.000}{31.6 \times 10^6}} = .0642$$

ELE	b	t	b/t	$\sqrt{\frac{Fcy}{E}}$ b/t	EDGE COND	Fcc	bt	$F_{cc}bt$	$F_{tu}bt$
1	.68	.034	20	1.28	OEF	59,600	.0231	1370	-
2	.68	.034	20	1.28	OEF	59,600	.0231	1370	-
3a	1.40	.034	41.1	2.64	NEF	80,000	2(.0476)	7580	-
3b	.30	.034	-	-	-	-	2(0102)	-	3470
4	1.36	.034	40	2.56	NEF	85,500	.0462	3950	7840

OEF - ONE EDGE FREE NEF - NO EDGE FREE

To obtain N.A., ΣFc must equal ΣF_t

or 10320 lb = 10310 lb

M_a = (1370) (2) (1.40) + 7580 (.7) + 3470 (.15) + 7840 (.3)

= 3840 + 5406 + 520 + 2350

= 12116 in. lb

$$M.S. = \frac{12116}{12100} - 1 = \underline{\underline{0.0}}$$

Shear

$$fs = \frac{8.4\ (20)\ (24)}{2\ (1.70)\ (.034)} = 38{,}200 \text{ psi ult.}$$

$Fs = KE\ (t/b)^2$

K = 6.5 (Ref. 3-1)

$$Fs = 6.5\ (31.6 \times 10^6) \times \left(\frac{.034}{1.70}\right) = 82{,}000 \text{ psi ult.}$$

$$M.S. = \frac{82{,}000}{38{,}200} - 1 = \underline{\underline{1.1}}$$

Single Skin Corrugation

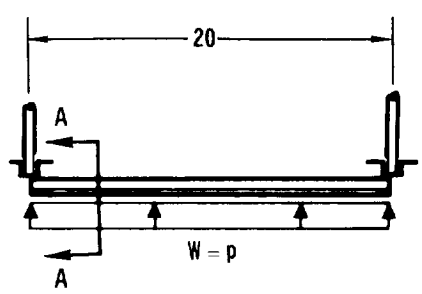

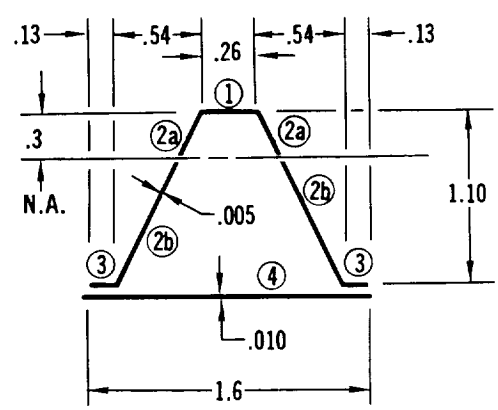

SECTION A-A

Figure 3.2-54 (Continued)

Material Properties (Ref.3-2)

RENE' 41 At 75°F

F_{tu} = 170,000 psi

F_{cy} = 130,000 psi

E = 31.6 x 10^6 psi

$$M = \frac{WL^2}{8}$$

$$= \frac{8.4\ (20)^2}{8}$$

= 420 in lb/in ult.

ALLOWABLE MOMENT (COMPRESSION IN SKIN) (REF. 3-1)

$$\sqrt{\frac{F_{cy}}{E}} = .0642$$

ELE	b	t	b/t	$\sqrt{\frac{F_{cy}}{E}}$ b/t	EDGE COND.	Fcc	bt	$F_{cc}bt$	$F_{tu}bt$
1	.26	.005	-	-	-	-	.001	-	221
2a	.33	.005	-	-	-	-	2(.00165)	-	554
2b	.895	.005	183	11.7	NEF	24,700	2(.004475)	226	-
3	.13	.005	26	1.67	NEF	12,000	2(.00065)	157	-
4	1.6	.010	160	10.25	NEF	24,100	(.016)	386	-

NEF - NO EDGE FREE

Check if .3" below Ele 1 is neutral axis line

$\Sigma F_T = \Sigma F_c$

769 lb = 775 lb

M_a/Corr. = 221 (.3) + 554 (.15) + 226(.4) + 157 (.8) + 386 (.8)

= 66.1 + 83 + 90.4 + 125.5 + 319

= 684 in lb

M_a/in $= \frac{684}{1.6}$ = 428 in lb/in ult.

$$M.S. = \frac{428}{420} - 1 = \underline{\underline{.04}}$$

Figure 3.2-54 (Continued)

Titanium Links

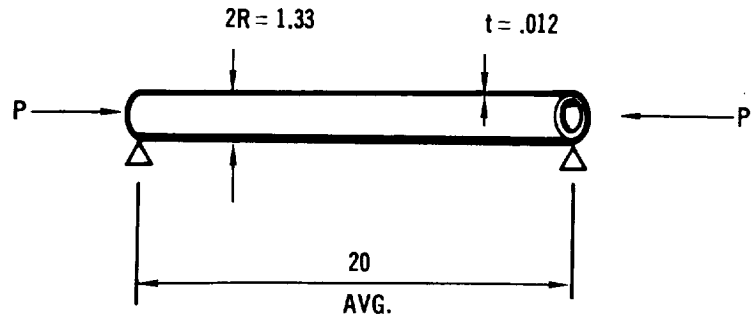

Material Properties (Ref. 3-2)

6Al -4 V Ti @ 90°F

$E = 16 \times 10^6$ psi

$$P = p\,(20)(24)$$
$$= 8.4\,(480)$$
$$= 4020 \text{ lb ult.}$$

$$f_c = 4020/\pi\,(1.32)\,(.012) = 80600 \text{ psi ult}$$

Local Crippling (Ref. 3-3)

$$F_{cr} = .3E\,\frac{t}{R} = .3\,(16.0 \times 10^6)\,\frac{(.012)}{.665}$$

$$= 86{,}600 \text{ psi}$$

$$\text{M.S.} = \frac{86{,}600}{80{,}600} - 1 = \underline{\underline{.07}}$$

Column Buckling

$$P_{cr} = \frac{\pi^2 EI}{L^2} = \frac{\pi^2 E(\pi R^3)t}{L^2}$$

$$= \frac{\pi^2 (16.0 \times 10^6)\pi\,(.665)^3\,(.012)}{(20)^2}$$

$$= 4420 \text{ lb}$$

$$\text{M.S.} = \frac{4420}{4020} - 1 = .10$$

Figure 3.2-54 (Continued)

FIBERGLASS/HCF POINT DESIGN

Design Condition: p = 8.4 psi Ult. @ 90°F for Station X/L = .25

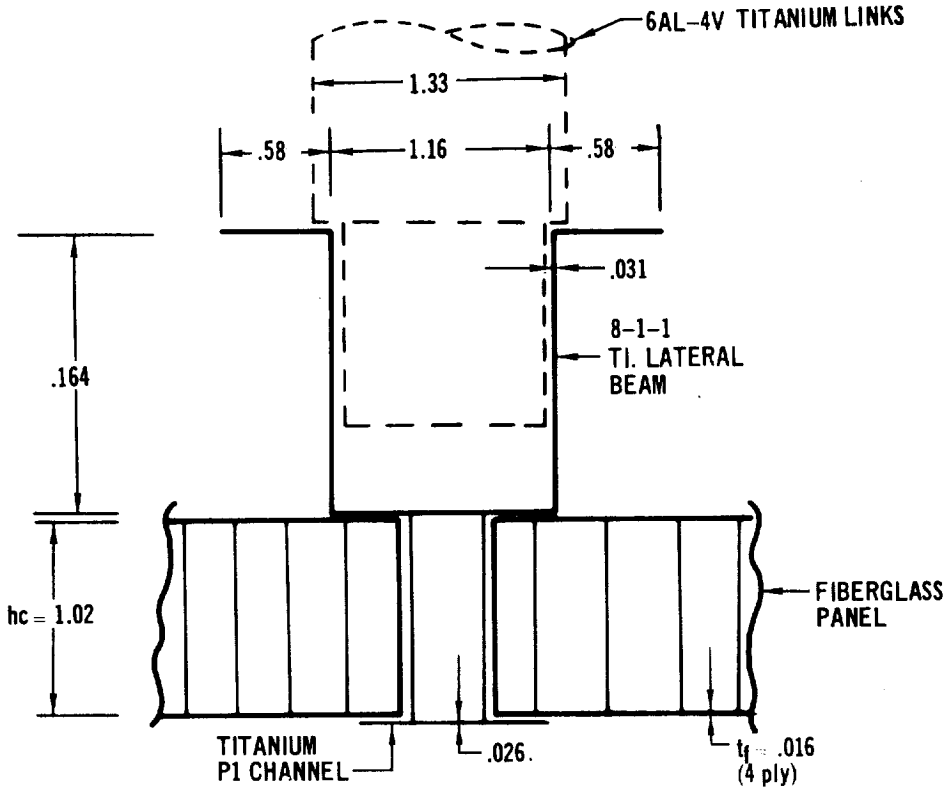

Lateral Beam (typical)

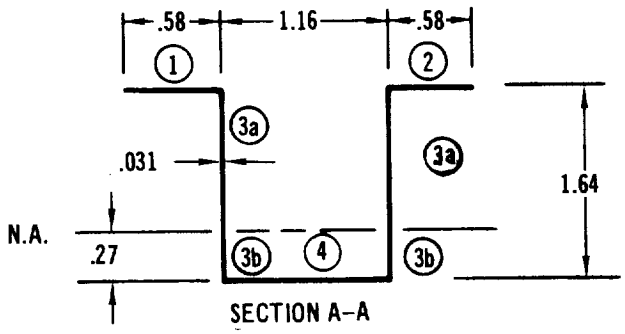

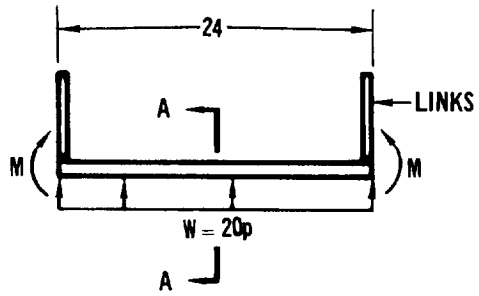

$I = 712 \times 10^{-4}$ in^4

$$M = \frac{WL^2}{12}$$

$$= \frac{20(8.4)(24)^2}{12}$$

$= 8060$ in # ult.

Material Properties Ref. 3-2)

8-1-1 Titanium at 90°F

$F_{tu} = 149$ ksi

$F_{cy} = 146$ ksi

$E = 17.5 \times 10^6$ psi

Figure 3.2-55

Allowable Moment (Ref. 3-1)

ELE	b	t	b/t	$\sqrt{\frac{F_{cy}}{E}}\, b/t$	EDGE COND.	F_{cc}	bt	$F_{cc}bt$	$F_{tu}bt$
1	.58	.031	18.7	1.71	OEF	54,000	.018	975	---
2	.58	.031	18.7	1.71	OEF	54,000	.018	975	---
3a	1.37	.031	44.0	4.04	NEF	68,000	2(.042)	5940	---
3b	.27	.031	---	---	---	------	----	----	2500
4	1.16	.031	37.4	3.42	NEF	76,200	.036	2750	5380

OEF - One Edge Free
NEF - No Edge Free

To find N.A. $\Sigma F_c = \Sigma Ft$

$\Sigma F_c = 7890$ lb

$\Sigma F_T = 7880$ lb

N.A. is .27 in. above ELE 4

$$M_a = 2(975)(1.37) + 5940\ (.685) + 2500\ \left(\frac{.27}{2}\right) + 5380\ (.27)$$

$$= 2680 + 4060 + 340 + 1440$$

$$= 8520 \text{ in - lb ult.}$$

$$\text{M.S.} = \frac{8520}{8060} - 1 = \underline{\underline{.05}}$$

Web Shear

$$f_s = \frac{8.4\ (20)\ (24)}{2\ (1.64)\ (.031)} = 39{,}600 \text{ psi ult.}$$

$$F_s = KE\ (T/B)^2$$

$$K = 6.5 \quad \text{(Ref. 3-1)}$$

$$F_s = 6.5 \times 17.5 \times 10^6 \left(\frac{.031}{1.64}\right)^2$$

$$= 40{,}600 \text{ psi ult.}$$

$$\text{M.S.} = \frac{40600}{39600} - 1 = \underline{\underline{.03}}$$

Figure 3.2-55 (Continued)

Fiberglass Honeycomb Panel

Fiberglass Honeycomb Face Sheets - 4 ply

Material Properties at 90°F (Ref. 3-6)

F_{tu} = 30,000 psi

E = 3.0×10^6 psi

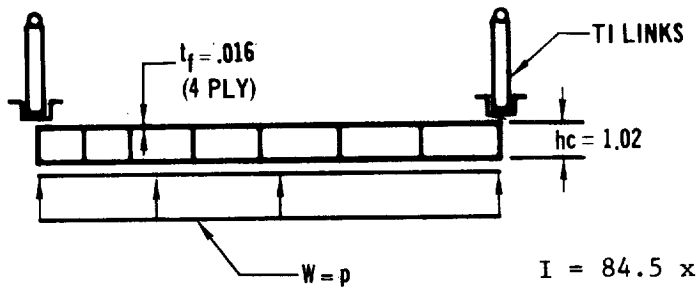

$I = 84.5 \times 10^{-4}$ in^4/in

$$M = \frac{WL^2}{8} = \frac{8.4\ (20)^2}{8} = 420 \text{ in lb/in}$$

Bending Strength

$$M_a = F_{tu}\ (h_c + t_f)\ t_f$$
$$= 30{,}000\ (1.02 + .016)\ (.016)$$
$$= 497 \text{ in lb/in}$$

$$M.S. = \frac{497}{420} - 1 = \underline{\underline{.18}}$$

Deflection

$$y_{max} = \frac{5\ W_{lim}\ L^4}{384\ EI} = \frac{5\ (8.4/1.4)\ (20)^4}{384\ (3.0 \times 10^6)\ (84.5 \times 10^{-4})}$$
$$= .493 \text{ in}$$

Maximum Allowable Deflection is 0.5

Figure 3.2-55 (Continued)

Fiberglass Core

3/16 in. Core Size - 3.5 lb/ft^3

Material Properties at 90°F (Ref 3-7)

$E = 3.0 \times 10^6$ psi

$F_{su} = 170$ psi

$F_{bru} = 275$ psi (core crushing)

Core Shear

$$S = \frac{P\ L}{2} = \frac{8.4\ (20)}{2} = 84 \text{ lb/in}$$

$$f_s = \frac{84}{102} = 82 \text{ psi}$$

$$M.S. = \frac{170}{82} - 1 = \underline{\underline{.21}}$$

Core Crushing

Assume a bearing surface on lateral beam of .31 inches.

$$f_{bru} = \frac{84}{.31} = 270 \text{ psi}$$

$$M.S. = \frac{275}{270} - 1 = \underline{\underline{.02}}$$

Figure 3.2-55 (Continued)

3.3 Mass Properties Summary - Mass properties data is included in Volume III. A discussion of weight deviation and listing of center of gravity, inertia and weight through the mission is included. A summary weight chart and mission history is shown in Figures 3.3-1 and 3.3-2 respectively.

WEIGHT SUMMARY - 25K PAYLOAD

GROUP	ORBITER	BOOSTER
BODY STRUCTURE	39,180	92,700
WING	14,700	37,410
TAIL	6,740	16,640
THERMAL PROTECTION	18,450	30,130
LANDING GEAR & DRAG CHUTE	6,400	12,750
MAIN PROPULSION SYSTEM	16,600	75,885
AIR BREATHING ENGINES & SYSTEM	14,700	30,510
RCS & TANKS	2,500	3,500
AERODYNAMIC CONTROLS	2,700	4,650
HYDRAULIC SYSTEM	1,590	2,930
ELECTRICAL POWER SYSTEM	3,280	3,000
G&N, INSTRUMENTATION, COMMUNICATIONS, CREW STATION & CONTROLS, & ECS	4,260	2,605
RESIDUALS	1,540	3,400
RESERVE	600	1,200
CREW & EQUIPMENT	600	0
CONTINGENCY	0	0
LANDED WEIGHT - POUNDS	133,840	317,310

Figure 3.3-1

WEIGHT SUMMARY - 25K PAYLOAD

CONFIGURATION	ORBITER	BOOSTER
LANDED WEIGHT LESS PAYLOAD	133,840	
PAYLOAD	25,000	
LANDED WEIGHT	158,840	317,310
FLY-HOME PROPELLANTS	3,070	80,000
FLUID LOSSES	11,910	17,420
ON-ORBIT MANEUVER (ΔV - 2000 FPS)	28,460	
ORBIT INJECTION WEIGHT	202,280	
INJECTION PROPELLANT (ΔV-15,965 FPS)	400,000	
SEPARATION WEIGHT	602,280	414,730
BOOST PROPELLANTS (ΔV - 14,635 FPS)		1,837,180
STAGE LIFT-OFF WEIGHT	602,280	2,251,910
TOTAL LIFT-OFF WEIGHT - POUNDS	2,854,190	

Figure 3.3-2

3.4 Subsystems

3.4.1 Hydraulic System

3.4.1.1 General - The hydraulic systems will be designed to utilize existing existing state-of-the-art design parameters and provide vehicle handling characteristics and safety equivalent to that found in present day jet transport aircraft. Applicable portions of MIL-H-5440 and Federal Aviation Requirements Part 25 will be utilized as guide documents. The systems shall be designed to meet the fail operational-fail safe philosophy.

3.4.1.2 Systems Quantity - To meet the system failure philosophy, it is necessary to have adequate vehicle control after the loss of two hydraulic systems which dictates the usage of a minimum of three separate hydraulic systems for aerodynamic controls. Preliminary indications are that three systems can be utilized in the orbiter vehicle since a pilot is in the vehicle control loop and can accomplish reasonable corrective action. This approach is utilized on the DC-10 aircraft. An arrangement of this type is shown in Figure 3.4-1. By utilizing three systems vs. four systems, an obvious saving in weight, logistics, maintenance and cost is achieved.

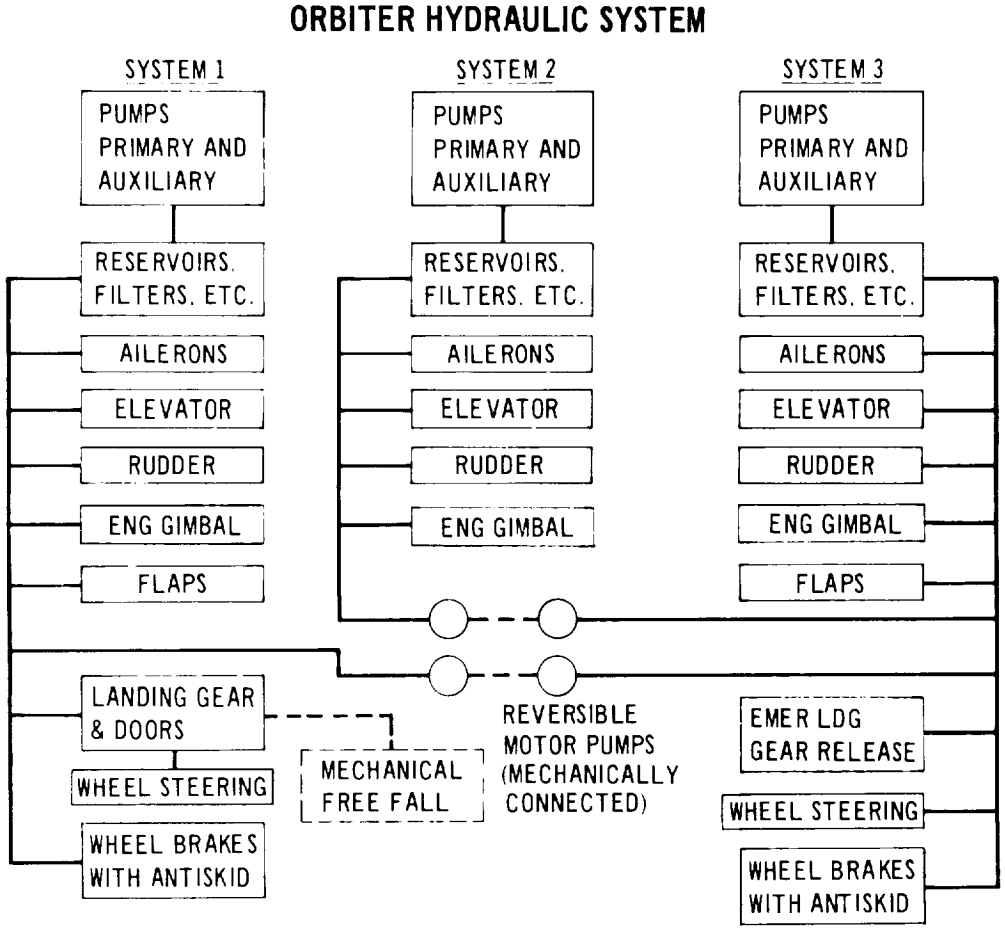

Figure 3.4-1

The systems for the booster are different in that the vehicle must have auto-land capabilities after a dual failure. This requirement dictates the usage of our separate systems so that the vehicle control features are unchanged after the loss of two hydraulic systems.

A more detailed analysis of the operational and control variables is required before a final configuration can be selected.

3.4.1.3 Power Source - Four basic power sources were considered for driving the system pumps: boost engines, cruise engines, electric power and APU's. The thrust engines are the normal source of power for transport vehicles; however, these engines are not in operation during the vehicle transition phase. Therefore, the power source required during transition is limited to electrical or APU's.

A preliminary estimate was made for the orbiter hydraulic power required during transition based on an elevator rate of 10°/sec and a dynamic pressure of 25 psf. This requires approximately 36 h.p. Also, some directional and lateral control power will be required prior to cruise engine ignition, and was estimated at 6 h.p.. The time from start of elevator deflection to engine ignition is from 40 to 60 sec.. Therefore, a duty cycle of 2 minutes was selected assuming system operation 30 sec. before and after the transition phase. Each of the three systems would be sized to handle approximately 50% of the load due to the failure philosophy. Therefore, during the transition phase the estimated hydraulic power requirements per system is 21 horsepower for 2 minutes. Based on this power requirement a weight analysis was conducted excluding the pumps, which are common, and transmission equipment i.e., wires, tubing, etc.

It was determined from handbook data that a 23 h.p. D.C. motor weighed 360 lb. Battery weights were calculated based on a 728 ampere running current and the weight to supply one motor was 380 lb. Therefore, the total vehicle weight for three systems would be 1920 lb.

The usage of hydrogen-oxygen fueled APU's was investigated and the following data was obtained from Sundstrand Corporation on an APU designed for the Dynasour program. The unit produced 37 h.p., weighed 115 lb. and had a specific fuel consumption rate of 1.65 lb/h.p.-hr O_2, and 2.8 lb/h.p.-hr H_2 at rated capacity. Therefore, the total weight of the three systems would be 363 lb.

A solid propellant gas generator system was also investigated. The system proposed by Vicker's Corporation for the Spartan program somewhat exceeded the power requirements but the weight of 131 lb per system was considered applicable for the purpose of this analysis. The total vehicle weight would be 393 lb.

The APU or gas generator system are approximately the same weight and either indicates a considerable weight saving over the electric power system. The APU appears to be the best choice since it can have a continuous duty cycle and is lightest in weight. FAR Part 25 requires vehicle controllability with all engines inoperative and the use of APU's would satisfy this requirement.

Since an APU is required during the transition phase, it also seems reasonable to size it for full system capacity and utilize it as the prime pump power source. Air bleed from the thrust engines could be utilized as a backup if required. Additional analysis is required to finalize the optimum hydraulic power source but the results of this preliminary analysis indicate that the APU approach, as a prime hydraulic power source, is the most desirable and it can have additional capacity for generators and bleed air supply with a nominal weight increase.

3.4.1.4 System Characteristics - The following system characteristics, at this time, appear to be applicable; however, the final selection cannot be made until a detail trade study is conducted in each area.

a. Flight Control Actuators - Servo controlled, dual system, electrical input, fail safe attachment

b. Fluid Media - MIL-H-5606 or Oronite depending on final thermal profile

c. Tubing - Stainless stell or titanium

d. Fittings - Permanent type

e. Components - Modular concept

f. Reservoir - Boot strap type with residual pressure characteristics

g. Filtration - 15 micron absolute

A typical system arrangement for the orbiter is shown in Figure 3.4-2.

ORBITER HYDRAULIC POWER ARRANGEMENT

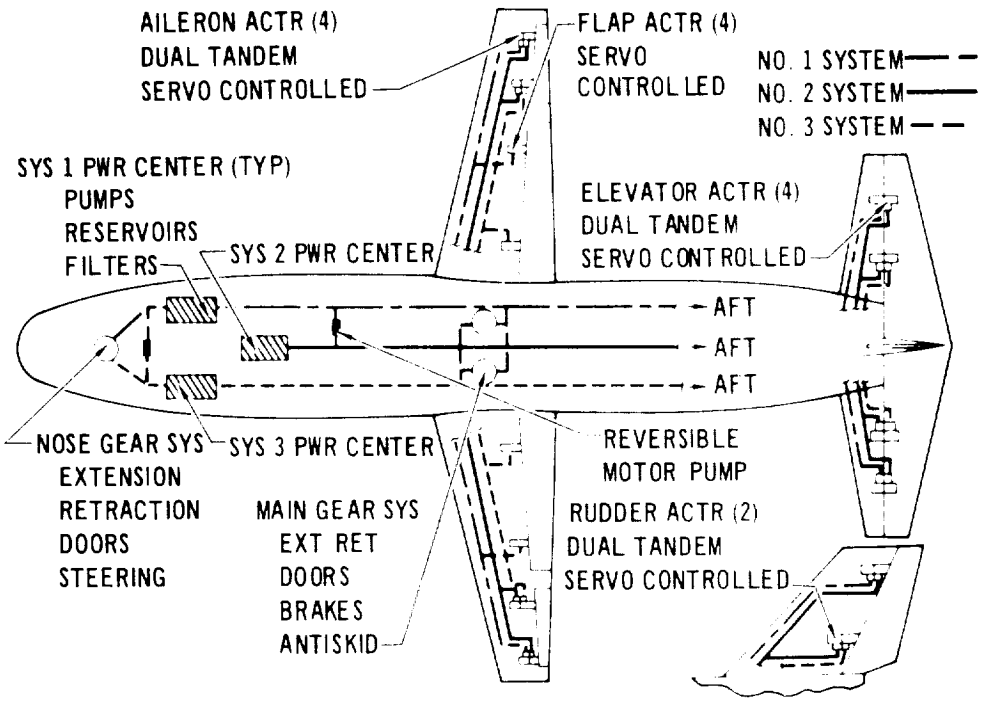

Figure 3.4-2

3.4.2 Environmental Control System - The function of the Environmental Control System (ECS) is to provide a habitable shirtsleeve environment in the vehicle. The orbiter requires an ECS that will provide this environment for two men for a flight as long as seven days. The booster requires an ECS that will provide the desired environment for a brief launch flight or a long ferry flight. The systems to provide these functions are discussed below. The functional concepts and baseline characteristics are given in Figures 3.4-3 and 3.4-4 respectively, and a weight summary is given in Figure 3.4-5.

3.4.2.1 Orbiter ECS - The functions to be provided by the ECS are; atmosphere supply, atmosphere processing, cabin and equipment temperature control, water supply and waste management. Figure 3.4-4 gives the baseline system characteristics. The ECS consists of the gas supply and control, the gas processing, the heat transport circuit, the water and waste management, and hydraulic cooling subsystems. These subsystems are briefly described below and with the exception of the hydraulic cooling subsystem, are shown schematically in Figure 3.4-6. For this study only the normal tradeoff criteria of electric power and weight were used for selection of the baseline system. Eventually, other criteria such as cost, reliability, maintainability, refurbishment time and frequency, and commonality with other ECS systems must be considered.

ENVIRONMENTAL CONTROL SYSTEM FUNCTIONAL CONCEPT

MISSION PHASE	ORBITER	BOOSTER
PRELAUNCH	SYSTEM COOLING BY AIR CYCLE – GROUND SUPPLY HIGH PRESSURE AIR.	SYSTEM COOLING BY AIR CYCLE – GROUND SUPPLY HIGH PRESSURE AIR.
LAUNCH/ ASCENT	SYSTEM COOLING BY WATER BOILER.	SINK HEAT IN COMPONENTS, COOLANT CIRCUIT.
ORBIT	SYSTEM COOLING BY SPACE RADIATOR – CRYOGENIC GAS SUPPLIES – CO_2 ABSORPTION BY LiOH – CREW WATER FROM FUEL CELLS.	NOT APPLICABLE.
ENTRY	SYSTEM COOLING BY WATER BOILER.	NOT APPLICABLE.
CRUISE/ LANDING	SYSTEM COOLING BY AIR CYCLE – ENGINE BLEED SUPPLIES HIGH PRESSURE AIR.	SYSTEM COOLING BY AIR CYCLE – ENGINE BLEED SUPPLIES HIGH PRESSURE AIR

Figure 3.4–3

ENVIRONMENTAL CONTROL SYSTEM CHARACTERISTICS

REQUIREMENTS	BASELINE SYSTEM
• SHIRT SLEEVE ENVIRONMENT FOR TWO MAN CREW. • SEVEN DAYS IN ORBIT. • CAPABLE OF SUBSONIC FERRY FLIGHT. • DISSIPATE 5^+ KW EQUIPMENT WASTE HEAT. • PROTECT RADIATOR FROM BOOST/ENTRY HEATING.	• SEA LEVEL ATMOSPHERE – NO PRESSURE SUITS. • STORE GASES AS SUPERCRITICAL CRYOGEN. • CONTROL CO_2 WITH LITHIUM HYDROXIDE. • CONTROL EQUIPMENT TEMPERATURES WITH LIQUID COOLANT CIRCUIT AND COLDPLATES. • AIR CYCLE COOLING PACKAGE FOR FERRY/ CRUISE. • DISSIPATE WASTE HEAT WITH SPACE RADIATOR AND WATER BOILER. • RADIATOR ON PAYLOAD BAY DOOR INNER SURFACE. • SUPPLY DRINKING WATER FROM FUEL CELLS. • VAPORIZE LIQUID WASTE – STORE DRIED WASTES • HYDRAULIC COOLING BY RAM AIR.

Figure 3.4–4

ECS WEIGHT AND VOLUME SUMMARY

ORBITER ECS SUBSYSTEMS	SALIENT FEATURES	WT (LB)	VOL (FT^3)
GAS MGMT & PROC	CO_2 ABSORPTION WITH LiOH	52	2.8
GAS SUPPLY & CONT	SUPERCRITICAL CRYOGENIC STORAGE	353	5.9
HEAT TRANSPORT	(2) SPACE RADIATOR (680 LB), WATER BOILER (110 LB), AIR CYCLE COOLING PACKAGE (50 LB)	1022	4.0(1)
CREW WATER SUPPLY	WATER SUPPLIED BY FUEL CELL	11	1.2
HYDRAULIC SYSTEM COOLING	RAM AIR HEAT EXCHANGER	61	3.0
MISC. CIRCUITRY, LINES, FTBS		90	0.5
TOTAL ECS		1589	17.1
BOOSTER ECS SUBSYSTEMS	**SALIENT FEATURES**	**WT (LB)**	**VOL (FT^3)**
OXYGEN SUPPLY	HIGH PRESSURE SUPPLY – MASKS AND PARTIAL PRESSURE SUIT FOR EMERGENCY	25	1.5
COOLANT CIRCUIT	HEAT SINK UNTIL AIR CYCLE OPERABLE	226	2.5
AIR CYCLE PACKAGE	POWERED BY ENGINE BLEED AIR OR GROUND SUPPLY	50	1.5
HYDRAULIC SYSTEM COOLING	RAM AIR HEAT EXCHANGER	61	3.0
TOTAL ECS		362	5.5

(1) DOES NOT INCLUDE SPACE RADIATOR (2) SPACE RADIATOR = 700 FT^2

Figure 3.4–5

ORBITER ECS SCHEMATIC

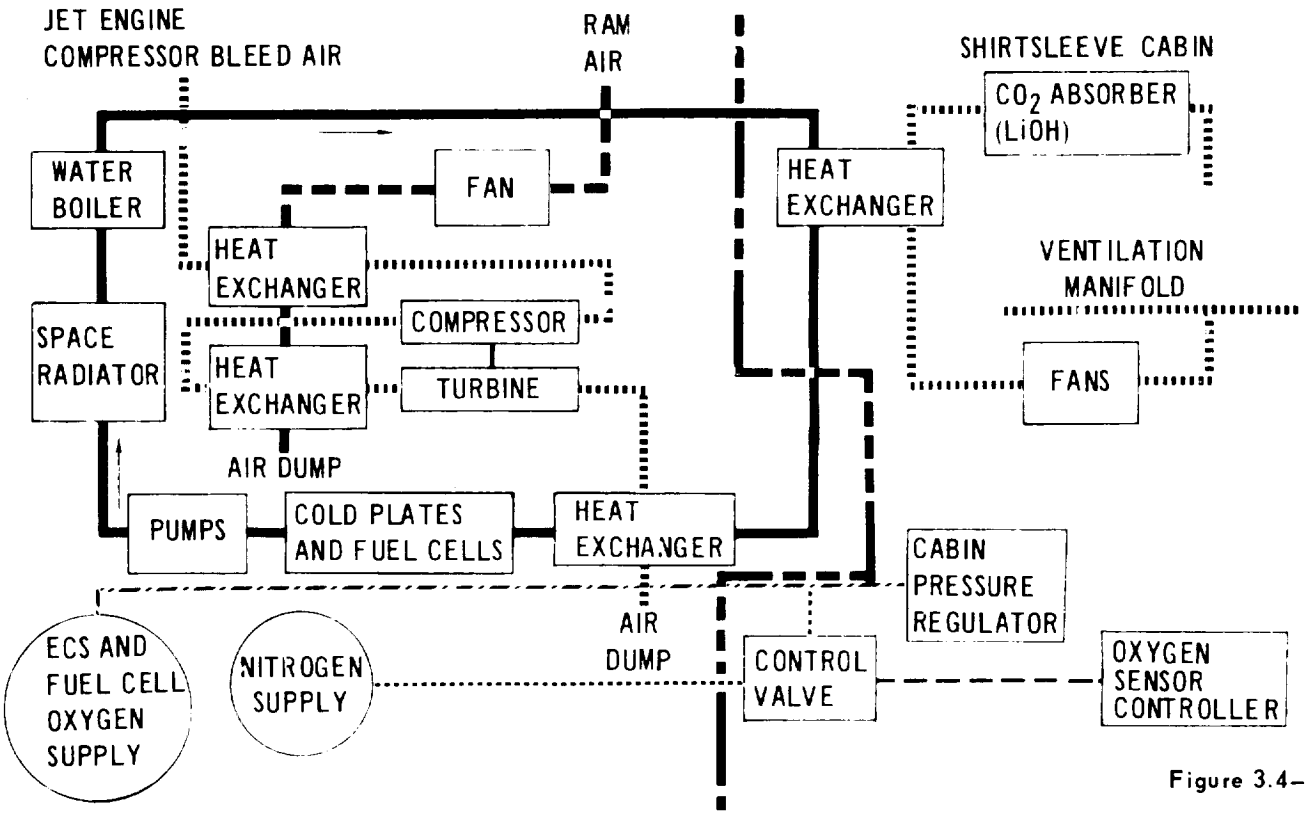

Figure 3.4-6

a. Gas Supply and Control - This subsystem supplies the oxygen and nitrogen for breathing and cabin pressurization. The ECS oxygen is provided by supercritical cryogenic oxygen tanks which supply both the fuel cell and the ECS requirements. Three tanks are provided, any two of which carry ample oxygen for the complete mission. Thus one tank failure will not prevent the accomplishment of a complete mission. In the event of a second failure the third tank contains more than enough oxygen for a safe return to earth. Three supercritical cryogenic nitrogen tanks provide 148 lbs of nitrogen for crew compartment leakage and pressurization with the same redundancy features as the oxygen supply subsystem. The cabin pressure is maintained at 14.7 psia by a cabin pressure regulator which is supplied from either the nitrogen or the oxygen supply. Initially, if the oxygen partial pressure is below the upper limit (3.1 psia), the solenoid valves in the nitrogen supply remain closed and only oxygen is added to the cabin. When the oxygen partial pressure reaches 3.1 psia, the controller opens the solenoid valves (redundant). The nitrogen which

is regulated to 150 psig, then backpressures a check valve in the 100 psig oxygen supply line, closing it, so that only nitrogen is supplied. When the oxygen partial pressure drops to the lower limit (2.7 psia) the nitrogen valves are closed and oxygen is again supplied.

b. Gas Processing - The system provides crew ventilation, atmosphere constituent control and atmosphere cooling. Cabin fans and gas inflow and outflow distribution ducts are provided at selected locations to circulate the cabin atmosphere. The cabin atmosphere gases are circulated through system components to filter, remove the carbon dioxide by reaction with LiOH, remove odors and trace contaminants with activated charcoal, and cool and control the relative humidity with a condensing heat exchanger.

c. The Heat-Transport Circuit - The system uses redundant coolant loops, and dual coldplates for the thermal control of electronic equipment, a space radiator, and a water boiler for heat dissipation. The secondary loop is used if a failure occurs in the primary loop. Redundant coolant pumps in each loop circulate the heat transfer coolant. Waste heat is rejected by the spacecraft radiator and water boiler in orbit and by the water boiler during atmospheric entry. An air cycle refrigeration package removes waste heat during subsonic cruise flight or during ferry flights.

d. Water and Waste Management - The subsystem provides: drinking water to the crew; a source of water for heat dissipation by evaporation, storage and disposal of condensate from the cabin heat exchanger and fuel cell product water; collection, storage or disposal of waste materials generated during the mission. Because of the short flight mission, water condensed in the cabin heat exchanger/water separator does not supplement the drinkable water supply, but is routed directly to the water boilers. The water supplied by the fuel cells is temporarily stored in a bladder type tank until it is used for drinking or heat dissipation. The fecal wastes, and urine are deposited in zero g, commode type receptacles from which they are automatically transported in a slurry form to an evaporator. The vapors are dumped overboard and the residue is dried for disposal at the end of the mission.

e. Hydraulic Cooling - This subsystem prevents overheating of the fluid in the hydraulic subsystem which powers the aerodynamic control surfaces. Heat is removed by ram air discharging through a air/liquid heat exchanger.

Heat is transmitted into the hydraulic subsystem by two means: (1) heat conducted in through the structure during entry and (2) heat generated by the hydraulic pumps when the aerodynamic control surfaces are active. Heat conducted into the subsystem during entry is stored by heat sinking until the cruise engines are operational. Since the control surface actuators are primarily used during cruise, most of the heat generated in the subsystem is during the cruise phase of the mission. Ram air cooling therefore provides a simple reliable means of heat removal from the hydraulic subsystem.

3.4.2.2 Booster - The booster ECS must provide the atmosphere supply, and cabin and equipment temperature control. The ECS consists of four subsystems: the oxygen supply, the heat transport circuit, the air cycle, and the hydraulic cooling subsystems. These subsystems, with the exception of the hydraulic cooling subsystem, are shown schematically in Figure 3.4-7. The operation of each subsystem is summarized in the succeeding paragraphs.

BOOSTER ECS SCHEMATIC

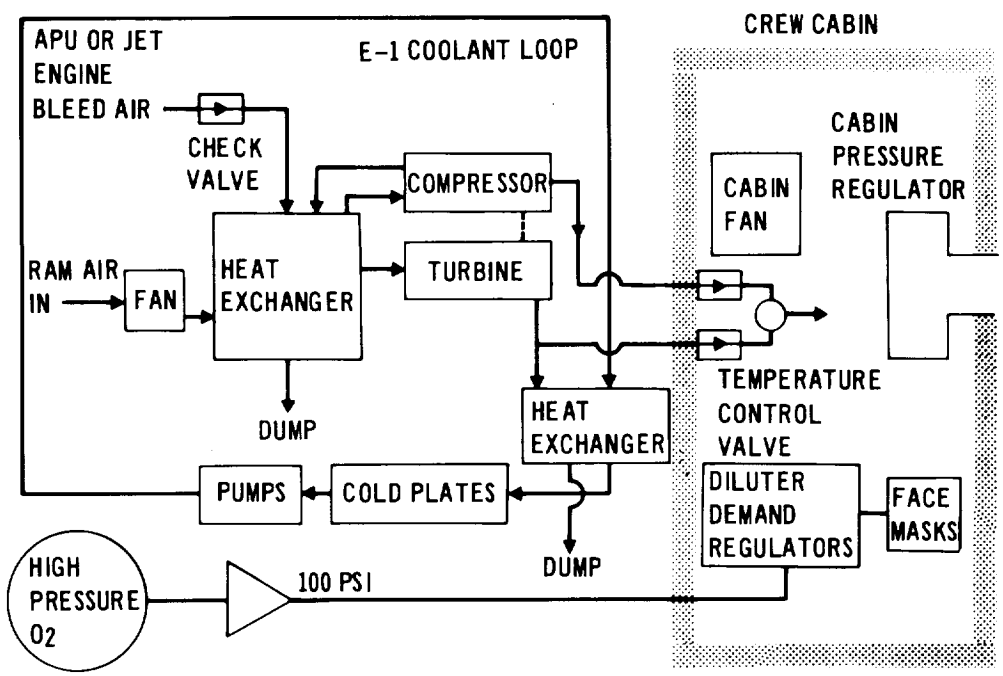

Figure 3.4-7

a. Oxygen Supply - The oxygen supply subsystem provides an emergency supply of oxygen. In normal flight, the cabin will be pressurized to the equivalent of an 8000 ft. altitude and additional oxygen will not be necessary. If the cabin pressure is lost, then the oxygen supply will provide oxygen until the vehicle is brought down to an altitude where cabin pressurization is not necessary.

b. The Heat-Transport Circuit - The system uses redundant coolant loops, and dual passage coldplates for the thermal control of electronic equipment. The secondary loop is used if a failure occurs in the primary loop. Redundant coolant pumps in each loop circulate the heat transfer coolant. Waste heat is rejected by an air cycle refrigeration package during subsonic cruise flight or during ferry flights. Prior to launch the air cycle machine is powered by a ground supply of high pressure air. During the boost phases of flight, heat dissipated by the electrical equipment is absorbed by equipment, coolant fluid, and circuit component temperature increases. Subsequent to boost the air cycle is powered with bleed air from the jet engine compressor.

c. Air Cycle - The air cycle subsystem serves a dual function, providing cabin air conditioning and pressurization, and providing cooling for the heat transport circuit. Jet engine compressor bleed air is cooled by heat exchange with ram air, is compressed, again is cooled by ram air and then is further cooled by expansion in a turbine that drives the compressor. The cold air removes heat from the coolant circuit and then is mixed with hot air from the compressor to control the cabin temperature.

d. Hydraulic Cooling - This subsystem prevents overheating of the fluid in the hydraulic subsystem which powers the aerodynamic control surfaces. Heat is removed by ram air discharging through a air/liquid heat exchanger.

4. AERODYNAMICS

Aerodynamic analyses have been performed for each of the various flight regimes from liftoff to landing for the nominal mission described in Figure 4-1. The prime intent has been to yield a minimum weight system, with consideration for the atmospheric exit and entry environment, while maintaining a high confidence in data validity through use of available test results (e.g., References 4-1, 4-2, 4-3) and/or theory substantiated by test results (e.g., References 4-3 through 4-8). Mission and contractual considerations have resulted in the establishment of several aerodynamic configuration requirements: (1) high angle of attack (α = 60°) trim capability throughout the hypersonic/supersonic portion of entry with controls fixed; (2) static stability in pitch and yaw with neutral stability in roll; (3) the capability to trim subsonically at both high (60°) and low (5°) angles of attack with adequate transitional control; (4) handling qualities for subsonic cruise, approach and landing typical of present high performance aircraft. These requirements, in turn, have led to configuration selection guidelines which can be summarized for entry as: (1) the lower surfaces of the body-wing-tail combination should be smooth and continuous to minimize flow interaction; (2) pitch trim will be obtained by cambering the flat fuselage bottom fore and aft of the center of gravity in combination with the horizontal tail; (3) lateral stability will be obtained by wing dihedral (7°); (4) directional stability obtained by differential fuselage side wall angles fore and aft of the center of gravity (i.e., 5° cant angle on the forward section and straight sidewalls aft such that at small angles of sideslip flow impingement will produce stabilizing moments); (5) reaction control system for stability augmentation; (6) low W/SC_L ($\sim$ 50 psf). Similar guidelines were established for the subsonic cruise, approach and land portion of the flight: (1) fixed wing design with low sweep (14° leading edge), high aspect ratio (AR = 7) with conventional ailerons and double-slotted flaps for landing; (2) conventional vertical/horizontal tail, rudder/elevator; (3) sufficient turbofan power and L/D for typical airplane handling qualities during approach and landing. Consideration of these requirements/gudelines, and various parametric studies covering fuselage nose fineness ratio, optimum boattail angle for minimum drag,

wing location, horizontal tail size aspect ratio and location (longitudinal and vertical), body-wing stability correlation with existing airliners, etc., have led to the selected configuration described in Section 3.1. Of the three flight configurations - Orbiter, Booster and Launch Configuration - prime emphasis has been placed on the orbiter. Similarity between the orbiter and booster results in most of the aerodynamic characteristics being common; therefore, specific booster characteristics are discussed herein only where significant differences exist, e.g., subsonic cruise L/D.

MISSION PROFILE

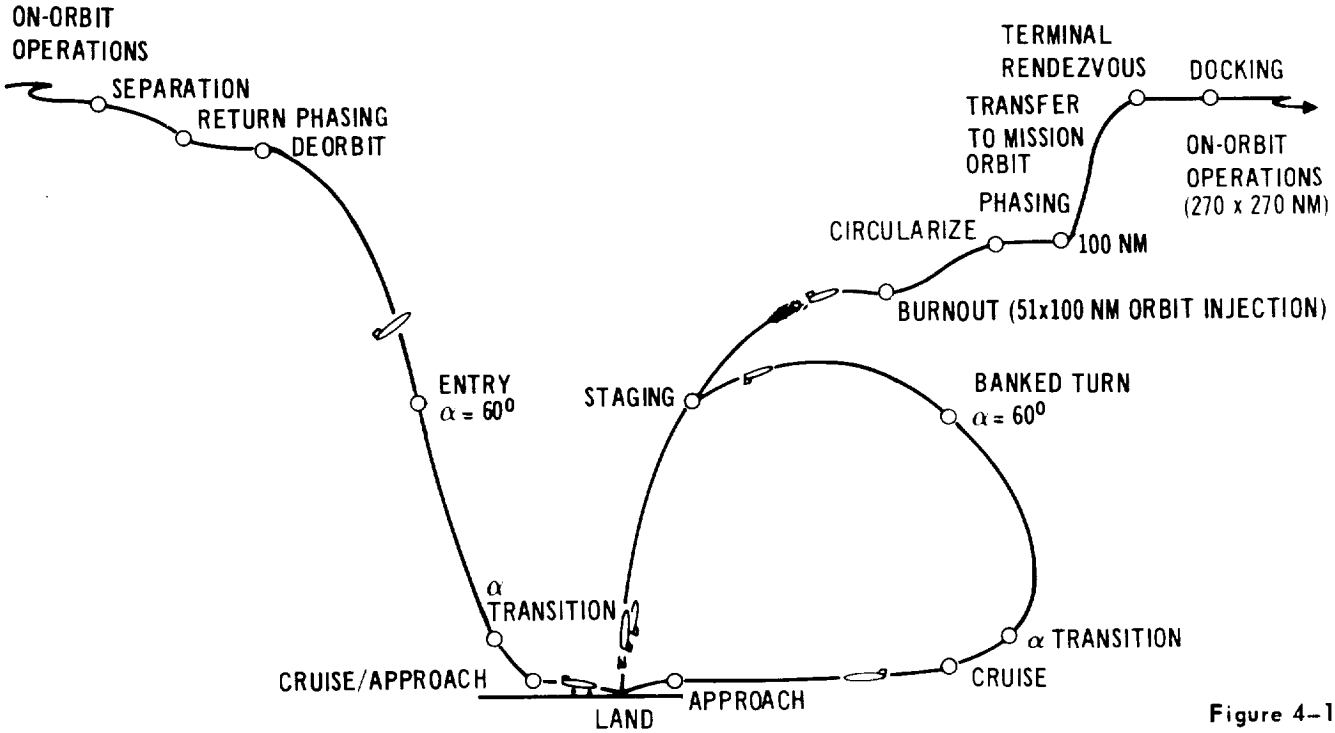

Figure 4-1

4.1 Ascent Configuration Aerodynamics - The results presented in Figure 4.1-1 have been developed utilizing LRC low speed wind tunnel data (Reference 4-1), transonic and supersonic trend data from airplane configurations, and hypersonic estimates. Although these data are considered preliminary estimates, the drag coefficient variation is adequate for preliminary launch trajectory calculations. In addition, the negative C_{m_α} and the positive C_{n_β} indicate the inherent stability of the ascent configuration. It is noted that C_n at zero sideslip angle is zero and C_m at zero angle of attack is -.25/-.33 (liftoff/burnout cg) respectively.

Further wind tunnel testing is required to produce reliable ascent configuration aerodynamic data necessary for final trajectory and airloads analyses. The test program should be sufficient to yield data throughout the pertinent flight region (M = 0 to M = 10) with particular emphasis near Mach 1 (the region of maximum ascent dynamic pressure). The data should include power-on effects to define the base pressure variation with Mach number.

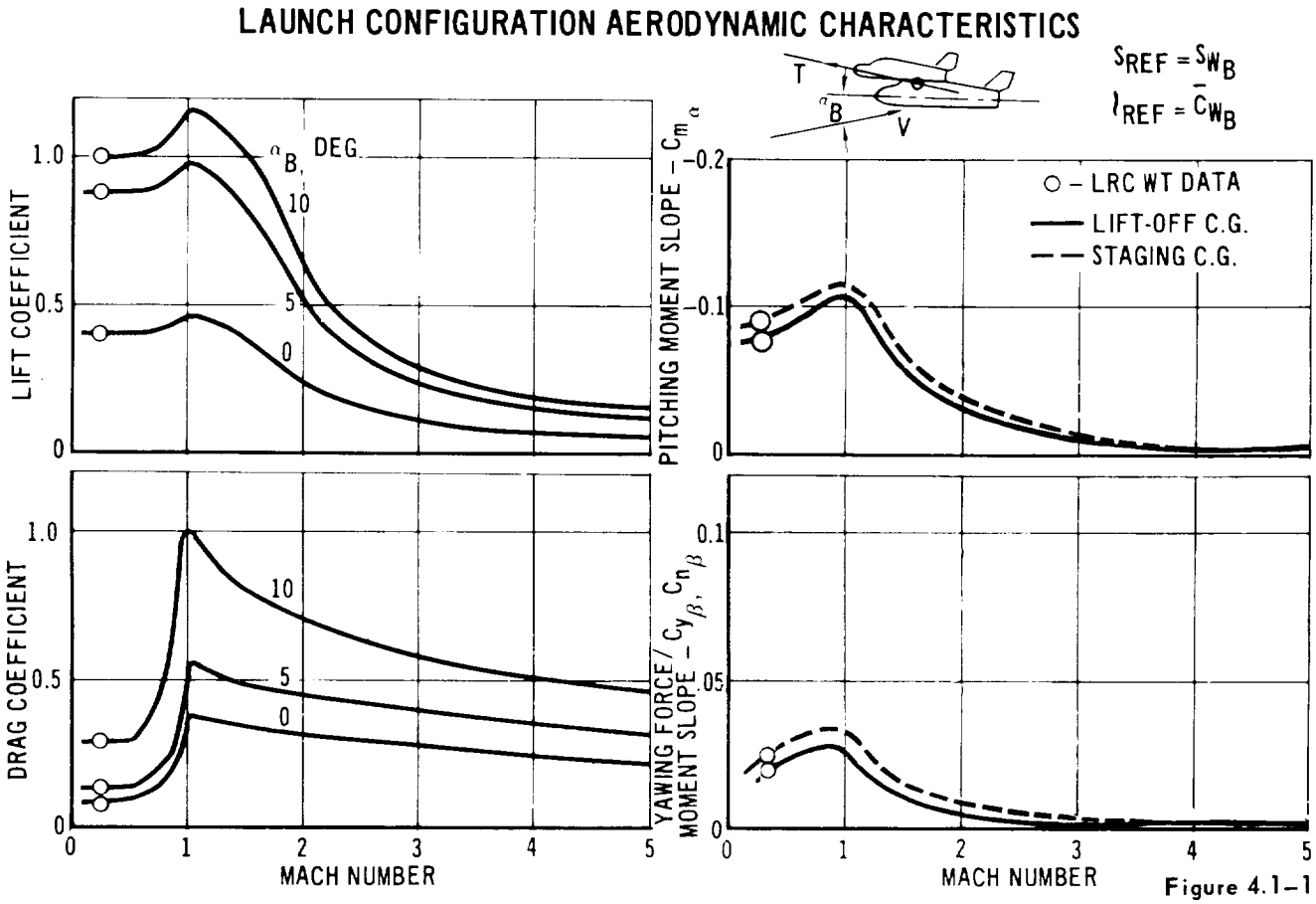

Figure 4.1-1

4.2 Hypersonic Aerodynamics - The Hypersonic Arbitrary-Body Aerodynamic Computer Program (Reference 4-4) was utilized to predict the hypersonic aerodynamics for the orbiter and booster configurations. The program was originally designed for predictions in air, however, modifications are being made for helium calculations for comparison with the LRC helium wind tunnel data (Reference 4-3). Preliminary results show good agreement between the test data and the theoretical predictions.

Separate geometry models for the orbiter are defined for inviscid and viscid force calculations. The inviscid model includes the fuselage with a flat plate over the engine inlets, wing airfoil shape, flat plate horizontal tail and elevator (no leading edges). The skin friction model is sufficient to define fuselage, wing,

and horizontal tail compression and expansion angles. The inviscid force calculation methods utilized were modified Newtonian with $C_{p_{max}} = 2.0$ for impact force calculations and Pradtl-Meyer expansion for shadowed areas. The viscous force calculations utilized the following techniques: (1) local flow conditions found by tangent cone method for compression surfaces; (2) pressure calculations using oblique shock theory in compression and Prandtl-Meyer theory in expansion; (3) laminar flow calculations applied to the wings, horizontal tail surfaces, and the first 40 feet of the fuselage and turbulent flow calculations applied to the remainder, and (4) wall temperature calculated with Reference Enthalpy/Spalding-Chi methods for laminar/turbulent flow. The atmospheric conditions for the above methods are from the 1962 standard atmosphere at 200,000 feet and Mach 20.

The results of the hypersonic analysis of the orbiter as presented in Figure 4.2-1 show that the orbiter can be trimmed in the region of $C_{L_{max}}$ (50° to 60° angle of attack) with a center-of-gravity (c.g.) location between 53% to 59% of the fuselage length. The forward c.g. limit is the point at which the vehicle would trim without an elevator, whereas the aft limit is a stability boundary beyond which no stable trim point exists. For a down elevator (positive deflection) of approximately 25° there are no stable trim points.

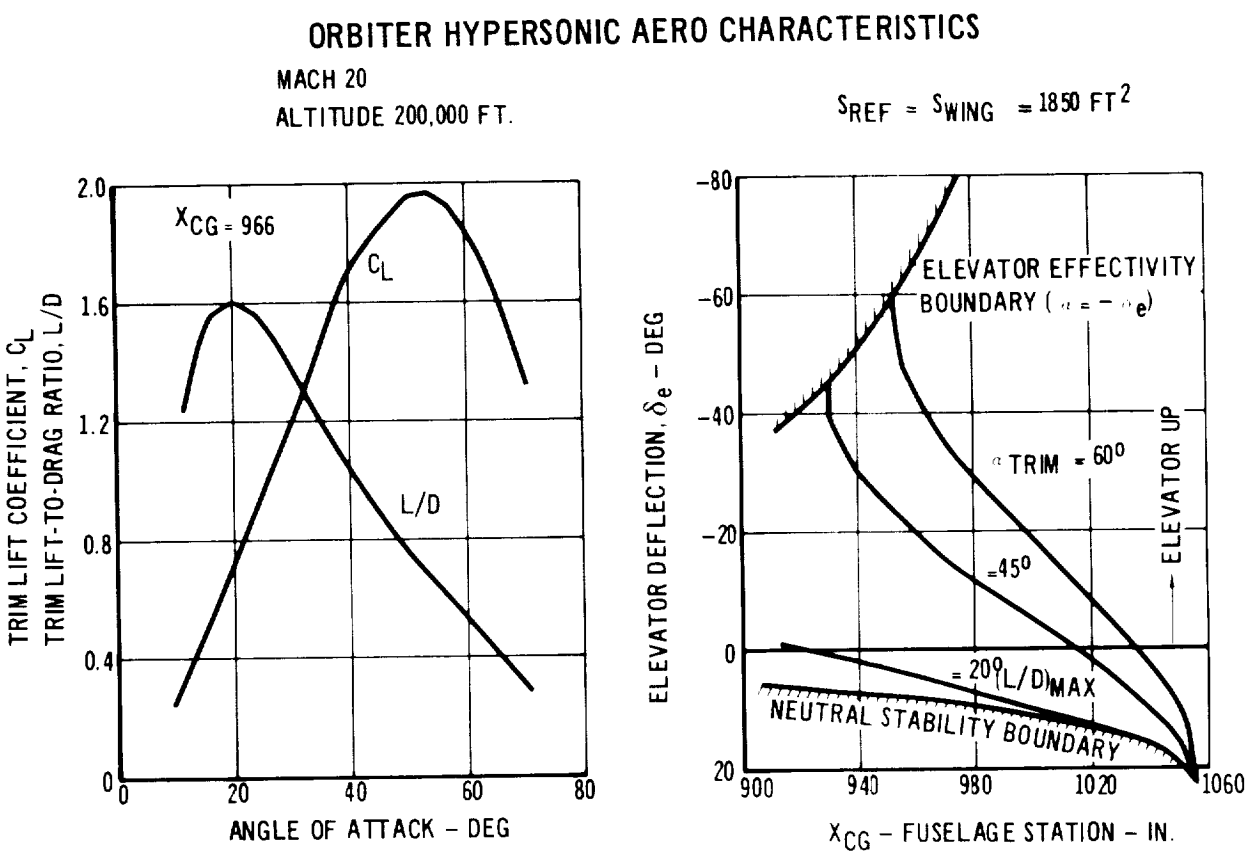

Figure 4.2-1

Accompanying the trim requirements are the trim aerodynamics in terms of lift coefficient (C_L) and lift-to-drag ratio (L/D). The respective maximum values are 1.85 and 1.6 at angles of attack of 52° and 20°. At the proposed entry angle of attack of 60°, C_L = 1.8 and L/D = .5.

An estimation of the hypersonic static and dynamic derivatives is shown in Figure 4.2-2. The data indicate the vehicle is dynamically stable in yaw, pitch, and roll; however, the vehicle is statically unstable in yaw for angles of attack less than 55 degrees.

HYPERSONIC STATIC AND DYNAMIC STABILITY CHARACTERISTICS FOR THE ORBITER

Mach 20 Altitude 200000 Ft		Moment Center at 54% Fuselage Length		
		β-Deg		
Coefficient Per Rad	α-Deg	0	5	10
$C_{m\alpha}$ $S_{REF}=S_w$ $L_{REF}=MAC$	45	-1.46	-1.43	-1.40
	50	-1.92	-1.91	-1.83
	55	-2.27	-2.27	-2.06
	60	-2.90	-2.90	-2.88
$C_{n\beta}$ $S_{REF}=S_w$ $L_{REF}=b$	45	-0.0080	-0.0129	-0.0172
	50	-0.0023	-0.0037	-0.0050
	55	0.0023	0.0037	0.0050
	60	0.0046	0.0074	0.0099
$C_{l\beta}$ $S_{REF}=S_w$ $L_{REF}=b$	45	-0.0080	-0.0071	-0.0055
	50	-0.0086	-0.0076	-0.0060
	55	-0.0092	-0.0082	-0.0063
	60	-0.0092	-0.0082	-0.0063
C_{mq} $S_{REF}=S_p$ $L_{REF}=L_B$	45	-0.27	-0.27	-0.26
	50	-0.36	-0.36	-0.35
	55	-0.49	-0.49	-0.48
	60	-0.67	-0.66	-0.65
C_{nr} $S_{REF}=S_p$ $L_{REF}=L_B$	45	-0.0046	-0.0046	-0.0040
	50	-0.0052	-0.0052	-0.0052
	55	-0.0057	-0.0057	-0.0057
	60	-0.0069	-0.0069	-0.0063
C_{lp} $S_{REF}=S_p$ $L_{REF}=L_B$	45	-0.23	-0.23	-0.22
	50	-0.26	-0.25	-0.25
	55	-0.28	-0.28	-0.27
	60	-0.31	-0.30	-0.30

Figure 4.2-2

Although the computer program utilized in this analysis can accurately predict the aerodynamic coefficients, it is not capable of predicting flow characteristics such as shock attachment and flow interaction or of accurately computing dynamic derivatives; therefore, wind tunnel tests are necessary to obtain the information required to analyze these areas.

4.3 Transonic Trim Requirements - Wind tunnel test data have been obtained throughout the transonic Mach numbers for a similar orbiter configuration by MSC (reported in Reference 4-2). These data have been utilized to establish the change in trim angle of attack if the elevator remains fixed at the hypersonic setting (typically -35°), Figure 4.3-1. If it should be more desirable to maintain a fixed angle of attack of 60°, the required changes in elevator deflection are shown.

Elevator deflection rates required to hold the 60 degree trim point for typical entries are less than 1 deg/sec. Alternately, at a fixed elevator setting, the resulting subsonic angle of attack (α = 72°) poses no problems to the following transition maneuver (to a lower angle of attack) while simplifying the flight procedures during entry.

TRANSONIC EFFECTS ON AERODYNAMIC STABILITY CHARACTERISTICS

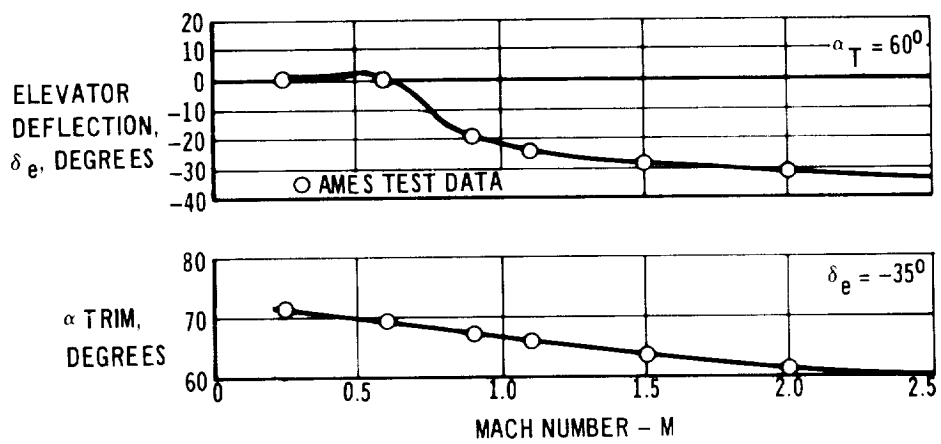

Figure 4.3-1

4.4 Subsonic Transition Aero (α = 0 → 90°) - Subsonic aerodynamic characteristics for the orbiter configuration have been derived from a NASA Langley wind tunnel test, Reference 4-1. These test data were modified to reflect small configuration variations including nose fineness ratio, tail size, and horizontal tail aspect ratio changes. Modifications were also made to the basic data in the angle of attack range between 45° and 75° to account for the difference between the subcritical test conditions and the super-critical flight Reynolds numbers.

The flow phenomena associated with sub-critical and super-critical Reynolds numbers are such that the normal force and pitching moment (to a lesser extent) are reduced in the super-critical regime. The mechanism of a bound vortex emanating from either side of the body nose, fed by a thin vortex sheet from the bottom side edges (References 4-9, 4-10), remains attached in sub-critical flow up to high angles of attack 42° - 65°. In this angle of attack region, breakdown of the vortex system beginning at the rear of the body causes a drop in normal force and an increase in pitching moment. Then as the vortex system is completely washed downstream (α = 65°), the levels of normal force and pitching moment drop abruptly. In super-critical flow the vortex system does not exist and thus no sharp decrease in normal force and pitching moment is expected. In addition, the overall level of cross-flow drag and resulting normal force (and pitching moment) are lower in super-critical flow (References 4-11, 4-12).

The fairings of the component wind tunnel data generally reflect the flow considerations above. The resulting total body stability is shown in Figure 4.4-1 for two center of gravity locations and including effects of elevator deflection. Two separate angle of attack regions exist for stable trim ($-Cm_\alpha$). Reentry attitudes lie in the high angle of attack trim region and adequate elevator control power exists to break this trim point and to perform the subsonic transition to the low angle of attack trim region for a center of gravity position between 52% and 57% of body length.

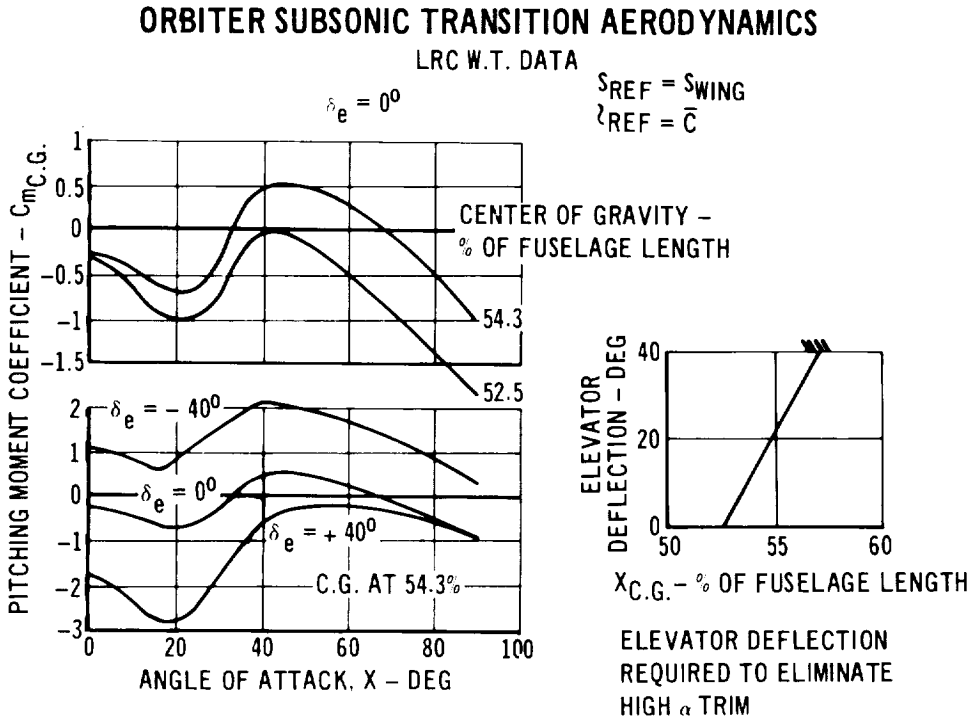

Figure 4.4-1

4.5 Subsonic Trim Aerodynamic Characteristics - The estimated orbiter low angle of attack trim lift coefficient and lift to drag ratio for the subsonic flight Reynolds number is shown in Figure 4.5-1. The cruise configuration data (flap deflection, $S_F = 0$) is based on Reference 4-1 wind tunnel data corrected for Reynolds number, nose fineness ratio, tail size and aspect ratio as previously discussed. The maximum lift coefficient is somewhat less than modern airliners primarily because the standard NACA symmetrical airfoil used on the orbiter and booster (selected to alleviate transonic loading during ascent) does not exhibit a high $C_{L_{max}}$. The maximum lift to drag ratio, (L/D) max, is also less than a typical transport aircraft. This results primarily from the higher drag associated with the large base area and fuselage wetted area.

It is desirable that the orbiter and booster land at normal transport speeds, 130 to 140 kts., requiring an efficient high-lift system. Wing leading edge devices are ruled out because of the thermal environment encountered during entry. The design 30% chord double-slotted flaps covering 60% of the exposed span yield landing speeds ($1.1\ V_{stall}$) less than 140 kts and produce good horizontal take-off characteristics, high C_L and moderately high L/D. Figure 4.5-1 also shows the estimated flap effects for landing ($\delta_F = 55°$) and take-off ($\delta_F = 20°$). The techniques used in obtaining these estimations yield good agreement with DC-8-61 flight test data and DC-10 wind tunnel data.

Due to the similarity of the orbiter and booster, the booster trim lift coefficients are nearly identical to those of the orbiter. However, the large base area of the booster results in a cruise configuration $(L/D)_{max}$ of 7.2 compared to 8.1 for the orbiter.

The directional and lateral characteristics based on LRC wind tunnel tests (Reference 4-1) are shown in Figure 4.5-2 for the orbiter. Booster data show similar trends and magnitudes. As the figure illustrates, the orbiter/booster are statically stable both directionally and laterally.

ORBITER TRIM AERODYNAMICS

SUBSONIC FLIGHT REYNOLD'S NUMBER
ZERO FLAP DEFLECTION BASED ON LRC W.T. DATA – REFERENCE (4–1)
ADDITIONAL DEFLECTIONS ESTIMATED USING DC–8–61 & DC–10 TECHNIQUES

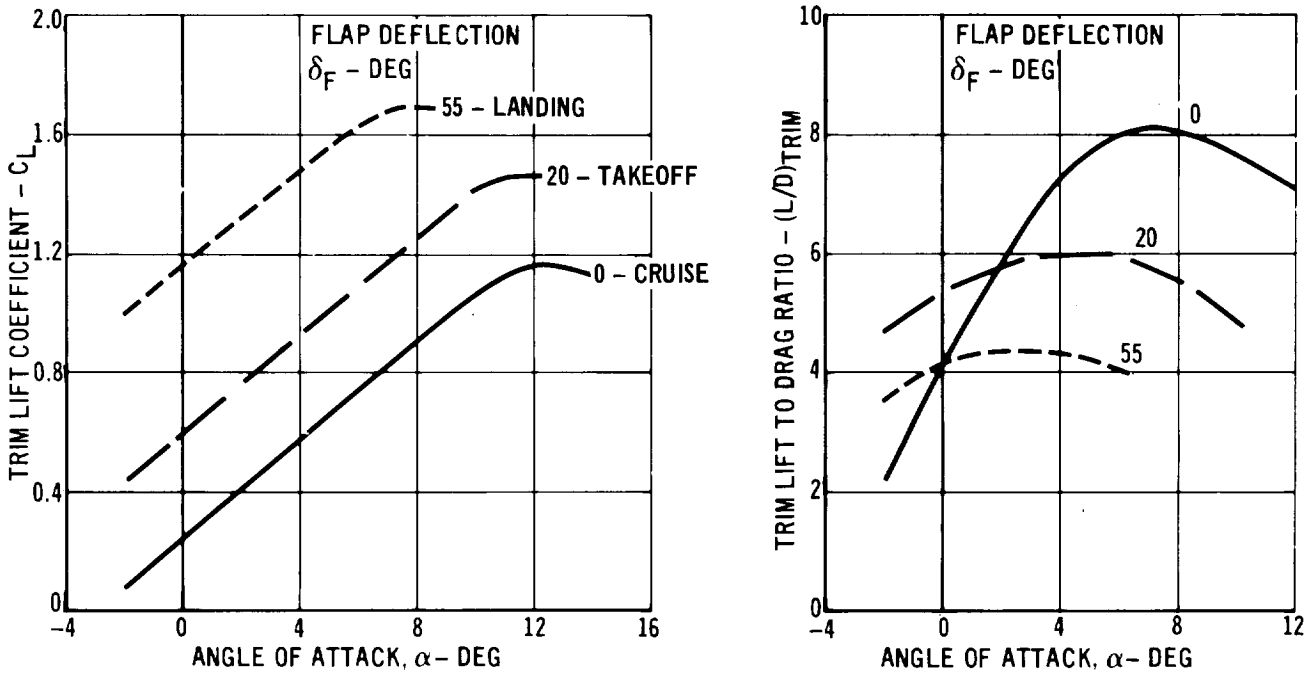

Figure 4.5–1

ORBITER DIRECTIONAL/LATERAL STABILITY

NOTE: (1) DATA BASED ON LRC LOW SPEED WIND TUNNEL DATA – REFERENCE (1)
(2) ANGLE OF ATTACH RANGE FOR CRUISE, APPROACH & LANDING $< 10^0$
(3) DATA ASSUMED LINEAR $0 \leq \beta \leq 5^0$
(4) $S_{REF} = S_W$, $\ell_{REF} = b_W$, MOMENT CENTER @ $\bar{c}/R$

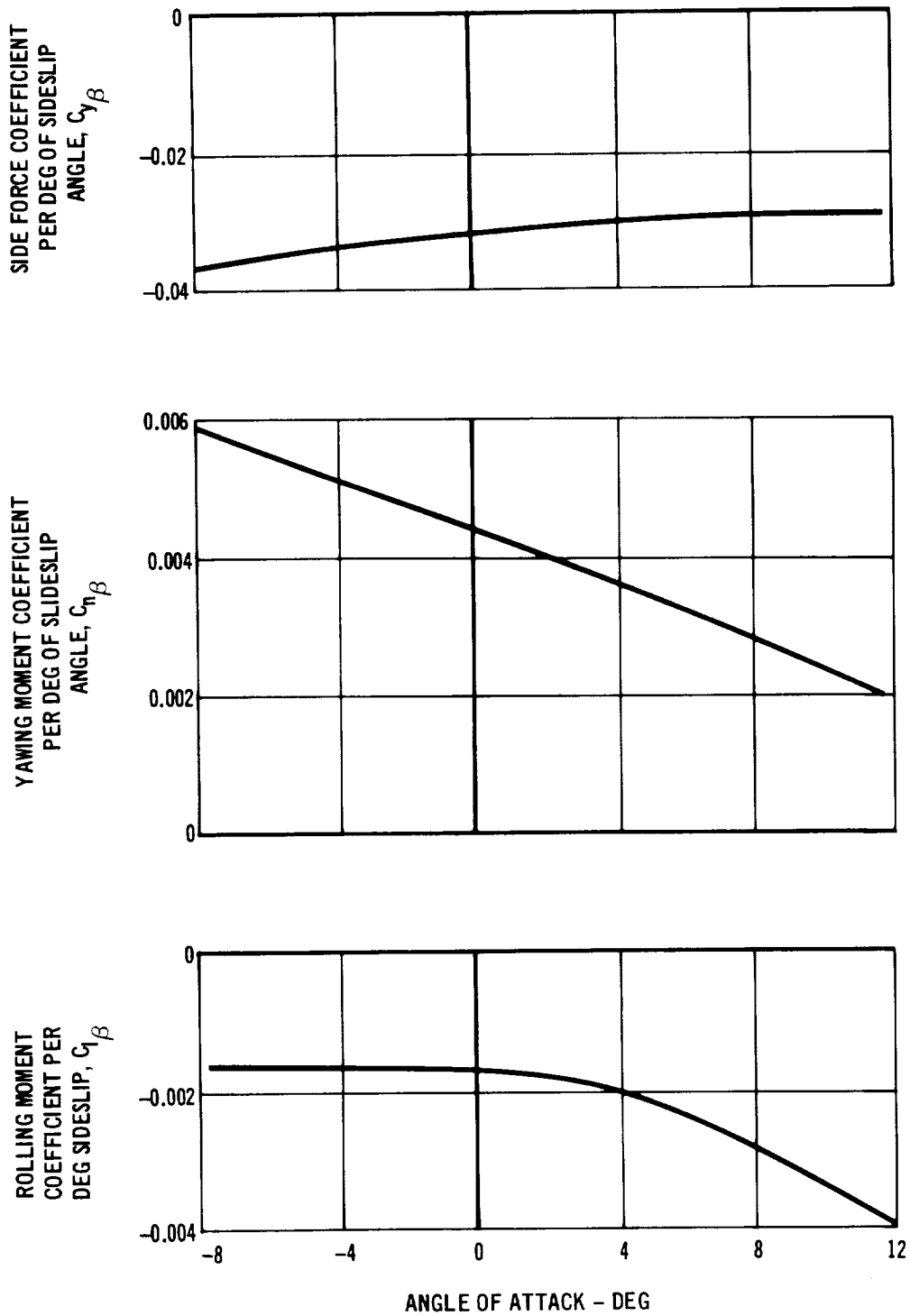

Figure 4.5–2

5. THERMAL PROTECTION SYSTEM

5.1 Summary The importance of the Thermal Protection System (TPS) is related to the large surface areas on the Space Shuttle vehicle that must be protected from the launch and entry heating environments. In this study, roughly 40,000 sq.ft. of surface area are associated with the orbiter and booster. A careful analysis and design are necessary for the TPS because an error of 0.1 lbs per square foot applied to the entire surface will result in roughly 4,000 lbs of weight.

The steps involved in a thermal protection system analysis may be grouped into three categories. First, the local heating rates must be determined on all portions of the vehicle surfaces. Heating rates are obtained both from instrumented models tested in wind tunnels and from theoretical correlations. After the local heating distributions are known and the design trajectories have been selected, the maximum vehicle surface temperatures can be predicted, for each of the mission phases that produce severe heating. The second step requires selection of materials that can endure the defined environments with sufficient margins to accept temperature uncertainties. The thermal performance and physical properties of these materials must be determined by test in order that the third phase of the effort can proceed. The final stage consists of defining the thermal protection system concept in depth from the surface into the interior of the vehicle, and using finite difference transient computer programs to determine the design thickness requirements of the external material and the internal insulation blankets. This thermal analysis will define the required design thicknesses to maintain structural elements at selected limit temperatures. Temperature histories are also provided by this analysis that may be used with the structural design analysis to predict the support panel thicknesses and structural weights. Finally, these thermal protection and structural support weights can be combined to determine the entire weight of the thermal protection system.

This section of the report has been organized to present a description of the selected TPS on the orbiter and booster, and to provide the unit weight distribution

and total weight for the TPS system. Following this summary material a number of topics are discussed in depth to provide the background information that was used to derive the baseline thermal protection system. The following areas will be covered:

1. Methods that are used to determine the heating rate predictions on the fuselage and wing for various angles of attack. Definition of the flow transition criteria. An illustration of the interference heating patterns on the fuselage and wing, and the resulting uncertainties of this heating related to temperatures.
2. Temperature predictions for the orbiter and the booster surfaces during launch and entry for the design trajectories (entry at $\alpha = 60°$).
3. Material evaluations and limitations; the reuse capabilities of several metallic and nonmetallic materials are indicated, and test data are provided for the hardened compacted fiber insulations, the carbon/carbon leading edge materials, insulations, adhesives, and cryogenic foams.
4. The results of a trade study are presented comparing the unit weights of metallic shingle and insulation blanket concepts with the weights of non-metallic hardened compacted fiber and insulation blanket concepts.
5. A detailed description of the thermal protection analysis procedures is provided so that all of the basic design curves used in the final sizing analysis are available for future work. Should the heating rate or temperature predictions change, revision of the TPS weights may be conveniently provided.
6. A trade study is made to illustrate the increase in thermal protection weight on the fuselage and the wing when an increase in cross range is required for this orbiter shape.
7. This section ends with a summary of thermal protection system problems that are common to all space shuttle vehicles.

5.2 TPS Baseline Description and Weights Heat protection may be concentrated on the lower fuselage surfaces for vehicles entering at high angles of attack. The baseline entry angle of attack is 60°. There are several advantages for this entry attitude. The heating time is extremely brief, therefore, the total heat is relatively small and the resulting TPS weight is reduced. Severe heating is experienced only on the bottom of the vehicle. The vehicle sides and tops are cool enough so that titanium metal may be used with a minimum of TPS weight. At this high angle of attack for lightly loaded (low $\frac{W}{S}$) vehicles, very little turbulent heating is expected on the lower fuselage surface. All of these advantages reduce the thermal protection weight. The disadvantage of a high angle of attack entry is that the lateral (or cross) range is quite restricted.

5.2.1 Orbiter TPS A description of the orbiter TPS for entry at 60° is illustrated in Figure 5.2-1. Pyrolized carbon laminate is used on the nose cap and wing leading edge regions where temperatures exceed 2500°F. The majority of the upper fuselage surface, upper tail, and upper wing areas are protected with titanium skin because the temperatures are below 800°F. Hardened compacted fiber (HCF) insulation made of silica and bonded to honeycomb sandwich panels is used to protect the lower fuselage area. On the lower wing and tail areas, and on the forward regions of the fuselage, HCF is bonded directly to the titanium skin. Where HCF is bonded directly to titanium, the metal skin is structural, and is not considered part of the TPS weight. Figure 5.2-2 illustrates the expected life of the TPS materials for this short time entry trajectory. On the fuselage and wing, materials are detailed for both baseline and alternate concepts. In most areas materials have been selected so that 100 flights can be considered as the design life. Local regions on the nose cap and the wing leading edges where temperatures are above 2500°F may require refurbishment. More detail concerning the expected life of materials is presented in Section 5.5.

A detail of the TPS on the bottom of the fuselage and the lower side regions of the fuselage is indicated in Figure 5.2-3. A silica HCF material is used with a 15 pcf density. This HCF has a silica cloth facing that is used to provide increased resistance to rain erosion and servicing damage. This facing has a high emittance coating of cobalt oxide. The outer layer of HCF is bonded with a film adhesive to a fiberglass honeycomb sandwich. Adhesive temperatures are limited to 500°F in this design to obtain the maximum reuse capability. The honeycomb sandwich panels are attached to the cryogenic tank rings with titanium structural links. These titanium links are designed to minimize the heat short between the exterior

panel and the cryogenic tank rings. A low density fibrous insulation blanket of TG 15000 is supported across the tops of the cryogenic tank rings to form a prelaunch purge space between the tank wall and the insulation blanket. Holes in the tank rings permit the purge gas flow to pass from one ring section to the next. On the inside of the hydrogen tank a polyurethane foam is bonded to the tank wall.

ORBITER TPS DESCRIPTION
(α = 60° Entry Trajectory)

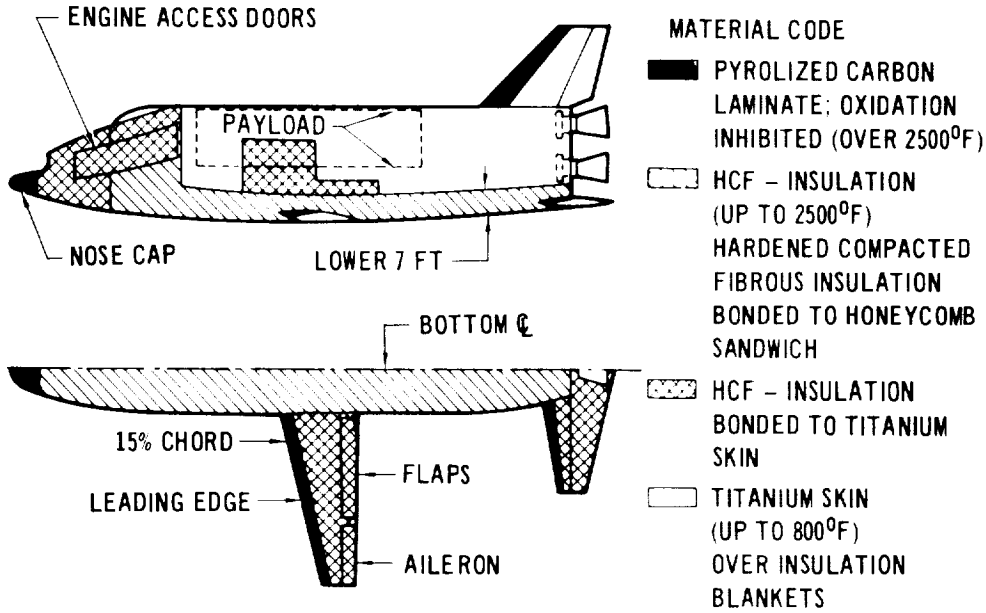

Figure 5.2–1

EXPECTED LIFE OF TPS MATERIALS
(α = 60° Trajectory)

SECTION OF ORBITER	SURFACE MATERIAL		DESIGN LIFE	
	BASELINE	ALTERNATE	BASELINE	ALTERNATE
FUSELAGE				
BOTTOM – FWD 1 3	MULLITE-HCF	COLUMBIUM	100 FLIGHTS	100 FLIGHTS
BOTTOM – AFT 2 3	SILICA-HCF	RENE' 41	100	100
LOWER SIDES	SILICA-HCF	RENE' 41	100	100
UPPER SIDES & TOP	TITANIUM	TITANIUM	100	100
CABIN & FWD RAMP	SILICA-HCF	RENE' 41	100	100
NOSE CAP	CARBON CARBON	ZIRCONIA	30	100
WINGS & TAILS				
LEADING EDGES	CARBON CARBON	CARBON CARBON	1 →10	1 →10
WING & TAIL LOWER SIDE	MULLITE-HCF	COLUMBIUM	100	100
FLAPS	RENE' 41	RENE' 41	100	100

Figure 5.2–2

TPS DETAIL – LOWER FUSELAGE

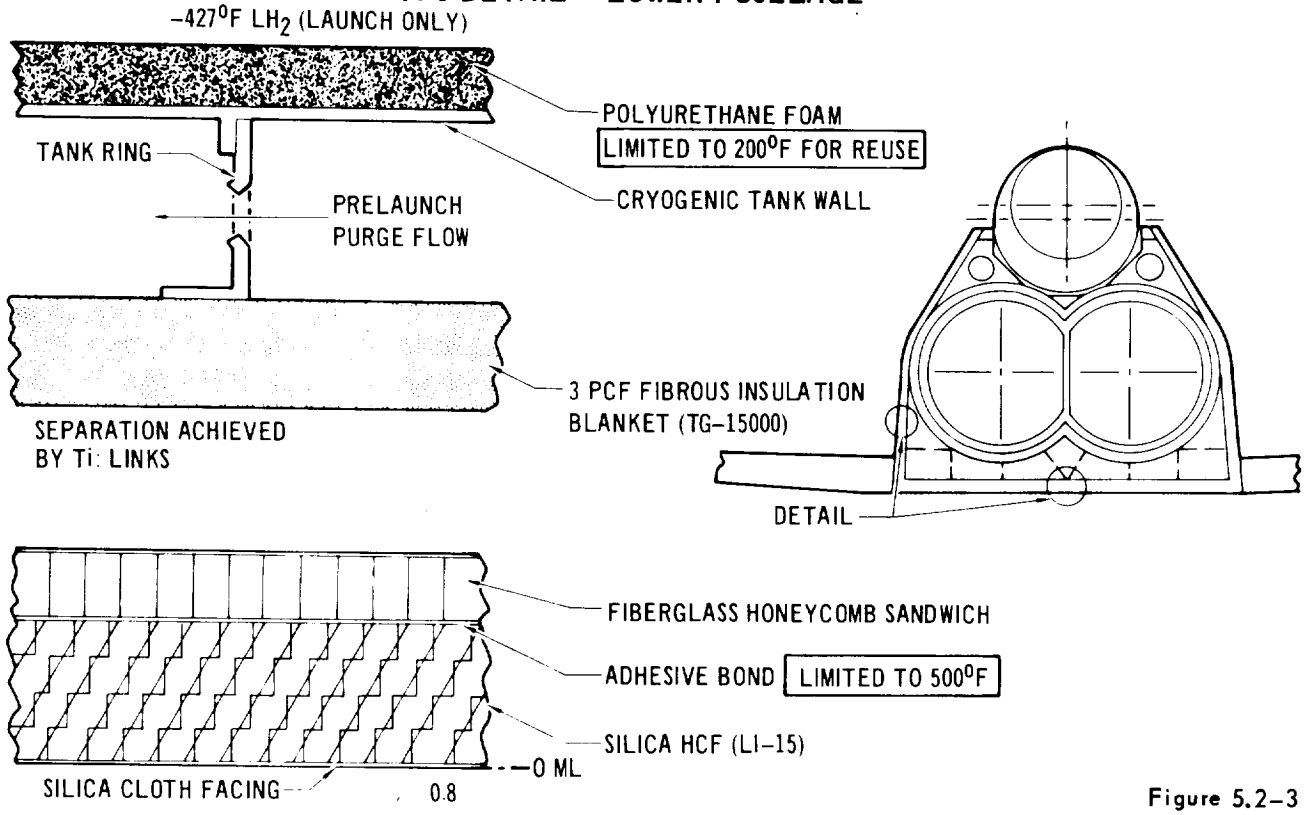

Figure 5.2-3

The cryogenic foam and the purge flow space are better illustrated in Figure 5.2-4. The soft insulation blanket (TG 15000) forms the outer wall for the purge base; the cryogenic tank forms the inner wall for the purge space. A uniform purge space has several advantages. It prevents locally starved regions of purge gas (using dry nitrogen) from becoming so cold that the purge gas itself turns to a liquid or frost. Use of a uniform purge space also permits thinner cryogenic foam for a specific lower limit on purge gas temperature. The insulation blanket wrapped around the cryogenic tank is smaller in area than if the blanket were supported near the outer moldline. The details of the foam used inside the liquid hydrogen tank are illustrated on the right of Figure 5.2-4. A 3-D fiber reinforced polyurethane foam is bonded to the inside of the hydrogen tank wall. The foam is covered with a scrim cloth liner and two wipe coats of sealer. This insulation is basically the same concept currently used on the Saturn SIV-B launch vehicles. The insulation design allows hydrogen gas to permeate into the foam but prevents liquid hydrogen from entering the insulation and causing a heat leak. A half inch of this insulation is considered adequate and has a unit weight of 0.395 lbs per sq. ft.

The approach selected for areas where the temperatures exceed 2500°F, as on wing leading edge,is a replaceable carbon slipper concept. Inhibited carbon

will oxidize where the temperatures exceed 2500°F. After several entry flights this oxidation may change the aerodynamic characteristics of the wing which are important for subsonic cruise flight. The replaceable slipper leading edge construction permits a relatively inexpensive part to be designed that can be replaced when necessary. Behind the inhibited carbon slipper is a carbon/carbon honeycomb structure in the leading edge that is good for 100 flights provided the surface of the carbon/carbon never exceeds 2500°F. The slipper consists of a carbon/carbon external surface approximately 3/10 of an inch thick that is backed by zirconia insulation and attached at local spots to the honeycomb sandwich. These attachment points are insulated with zirconia plugs. The slipper is considered only in those areas where temperatures above 2500°F are expected. The actual life prediction for the carbon/carbon slipper leading edge will be discussed later in this section. At this point it is sufficient to mention that using the worst-on-worst assumptions for the current heating prediction in the leading edge region, this design is currently estimated to endure at least 4 flights. If more realistic assumptions are selected in the region of interference heating on the wing leading edge, the slipper design thickness is good for roughly 10 to 30 flights.

TPS DETAIL – CROSS SECTION
(Purge Space and Cryo Foam)

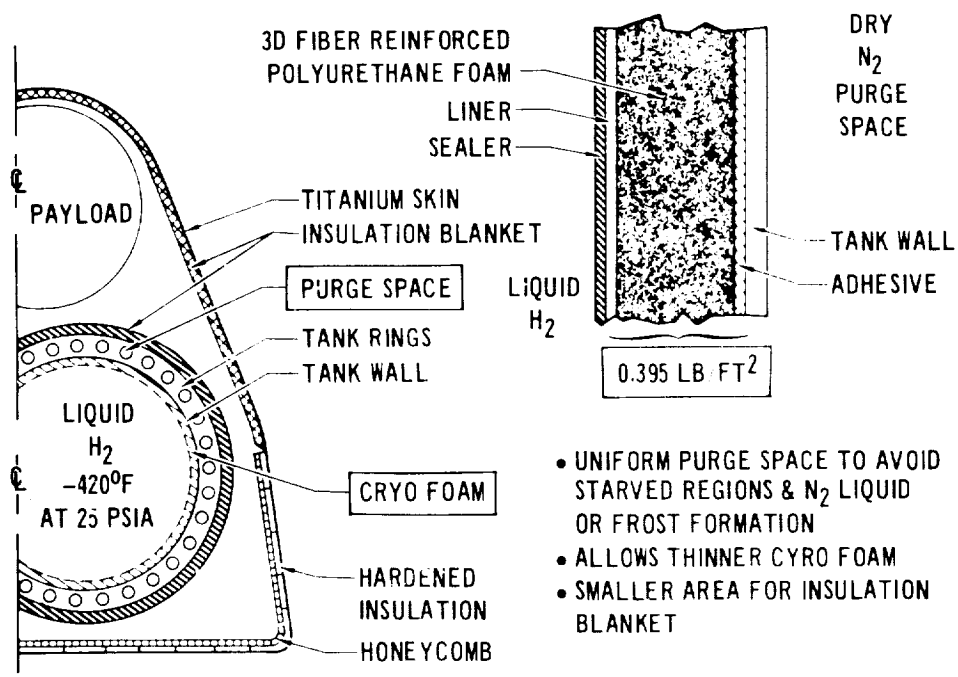

Figure 5.2–4

5.2.2 Booster TPS and Weight Two versions of a thermal protection system are illustrated for the booster. Figure 5.2-5 illustrates the baseline TPS. The majority of the area is below 800°F and is protected by titanium skin over insulation blankets. Those areas on the lower wing, horizontal tail, and the forward areas of the fuselage that exceed 800°F are protected by the hardened compacted fiber insulation. The total TPS weight for the booster is estimated at 30,130 lbs. This weight includes titanium shingles, HCF, insulation blankets, cryogenic foam inside the hydrogen tank, and base heat protection. (Where HCT is bonded directly to titanium that serves as structural skin the titanium is not included in the TPS weight.) Figure 5.2-6 illustrates an alternate TPS for the booster. In this case, all metals were selected. The majority of the area is titanium. Those areas above 800° are protected by Rene except for the nose cap and the wing leading edges where the temperature exceeds 1600°F, and columbium is used.

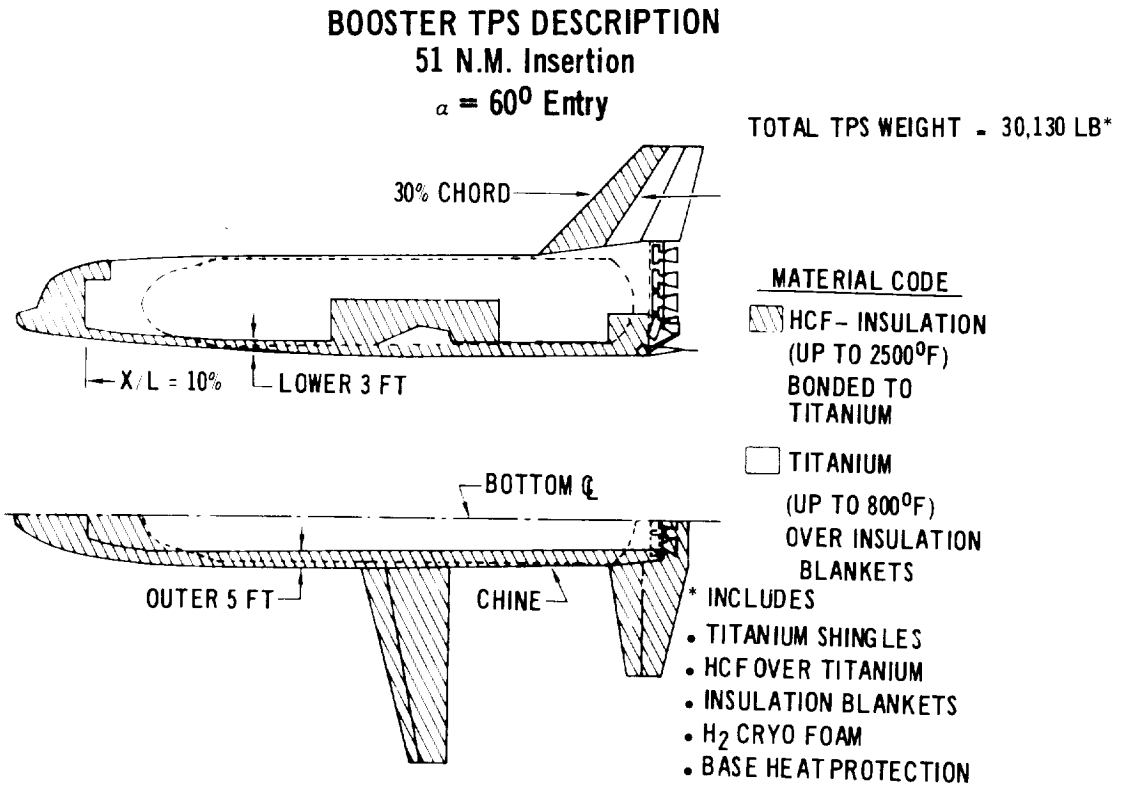

Figure 5.2-5

BOOSTER TPS DESCRIPTION
(51 N.M. Insertion $\alpha = 60^0$ Entry)

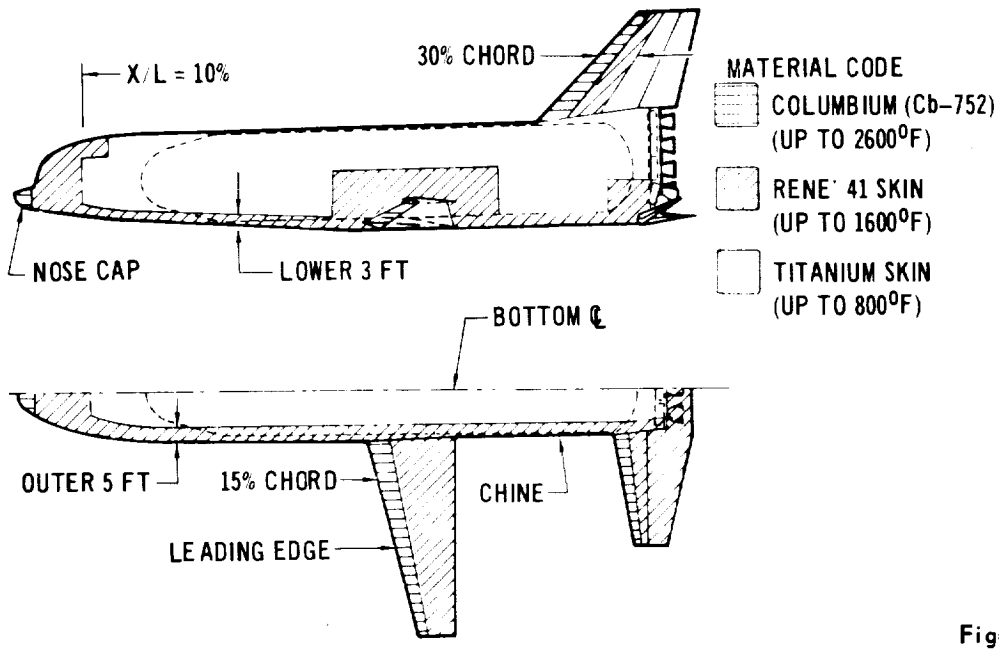

Figure 5.2-6

5.2.3 Orbiter TPS Weights and Distributions Figure 5.2-7 summarizes the total orbiter TPS weight distribution along the fuselage, and the chord-wise weight distribution on the wing. On the bottom center line, the TPS weight drops sharply on the front 20% of the fuselage length because the HCF is bonded to the titanium skin rather than applied to honeycomb panels. On the wings the TPS weight is slightly heavier at the wing tip (100% of exposed span), because the chord length and the leading edge radius are slightly smaller than at 50% span. The dash line indicates the heavier TPS weight in the inboard region where interference heating is experienced. In all cases the HCF material is bonded directly to wing structure, and the bond line temperature is limited to 500°F. The total TPS weight for the orbiter is 18,450 lbs. This total weight includes HCF, honeycomb panels, structural supports, insulation blankets, base heat protection, and cryogenic foam in the hydrogen tank. The reference fuselage area and wing area protected by TPS are indicated.

ORBITER TPS UNIT WEIGHTS
(α = 60^0 Trajectory)

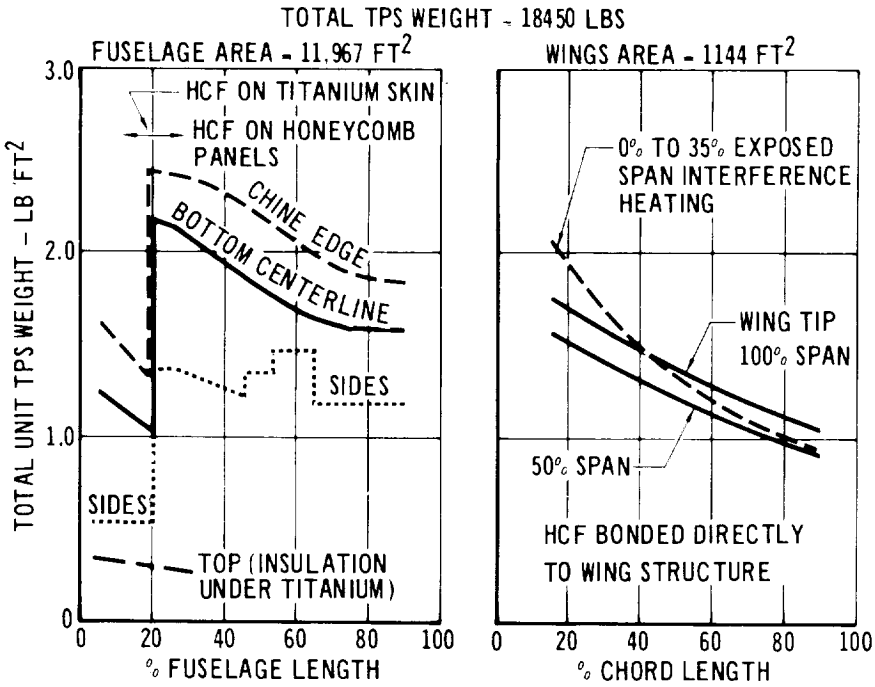

Figure 5.2-7

How the total TPS weights were obtained is illustrated in the next several figures. Figure 5.2-8 indicates the distribution of weight along the fuselage length for the external silica HCF on the bottom center line and the fuselage chine line. The lower lines on this figure indicate the unit weight of the insulation blanket underneath the HCF. Figure 5.2-9 illustrates the weight on the fuselage side and top showing the HCF material, the microquartz insulation under metal shingles and the TG 15,000 insulation under HCF. For the study ground rules, no insulation is required on the top of the fuselage past 25% of the fuselage length. However, a minimal weight is carried for the entire fuselage length because of equipment that is underneath the outer skin.

ORBITER TPS UNIT WEIGHTS BREAKDOWN
(α = 60° Entry)

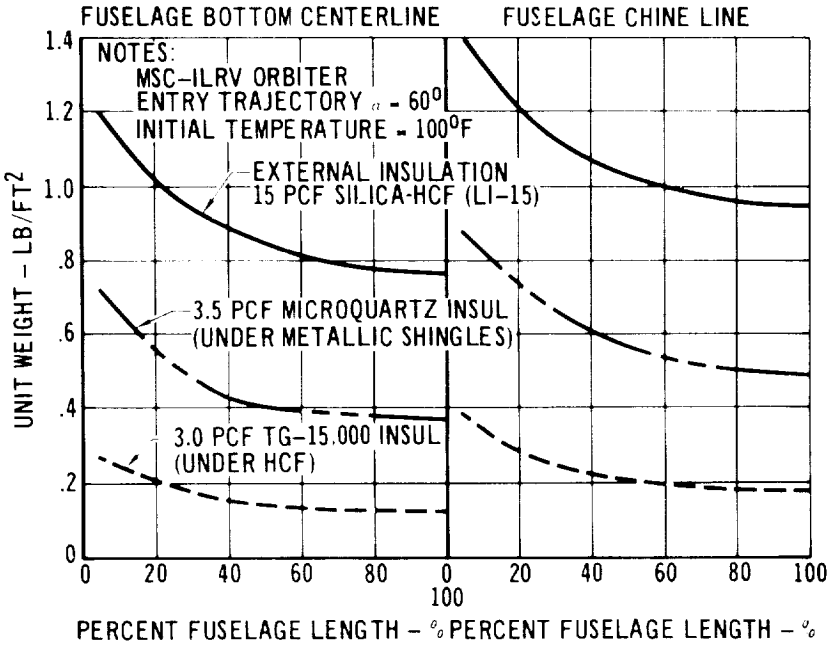

Figure 5.2-8

ORBITER TPS UNIT WEIGHT BREAKDOWN (Continued)

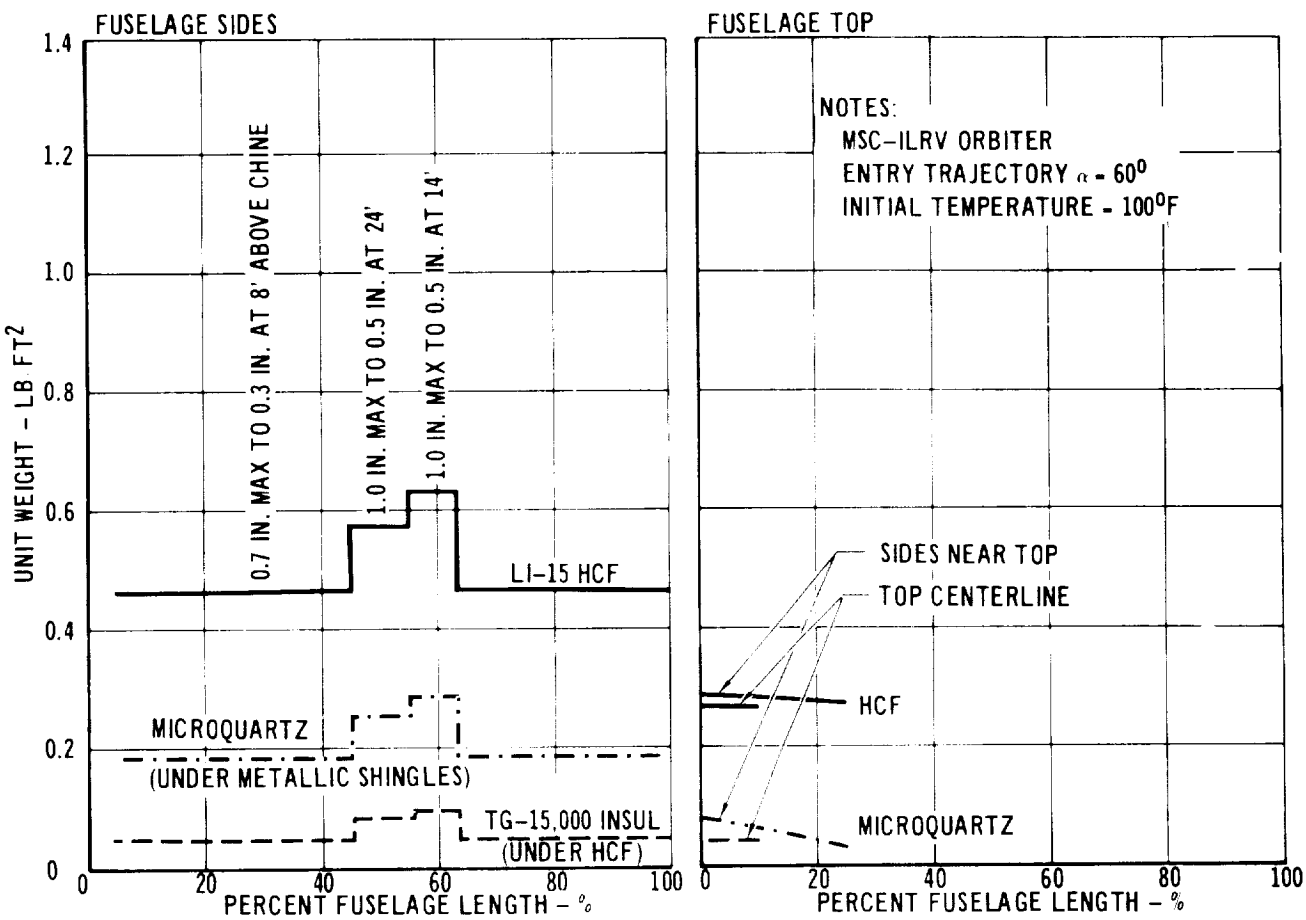

Figure 5.2-9

5.3 Heating Rate Distributions

5.3.1 Baseline Design Distributions Figure 5.3-1 presents the distribution along the fuselage bottom and chine region, and the distribution around the circumference of the fuselage. These distributions are for the baseline trajectory (α = 60°) normalized to a fuselage length of 150 ft. The data was combined with the design trajectory to generate the design surface temperatures shown in Section 5.4. The heating distribution on the wing for the design entry condition (angle of attack = 60°) is shown in Figure 5.3-2. The right hand side of the figure is the windward side of the wing, the lower surface during entry. The leeward side or upper surface of the wing is on the lefthand side of the figure.

FUSELAGE HEATING DISTRIBUTION
Angle of Attack, α = 60°
Fuselage Length = 150 Ft

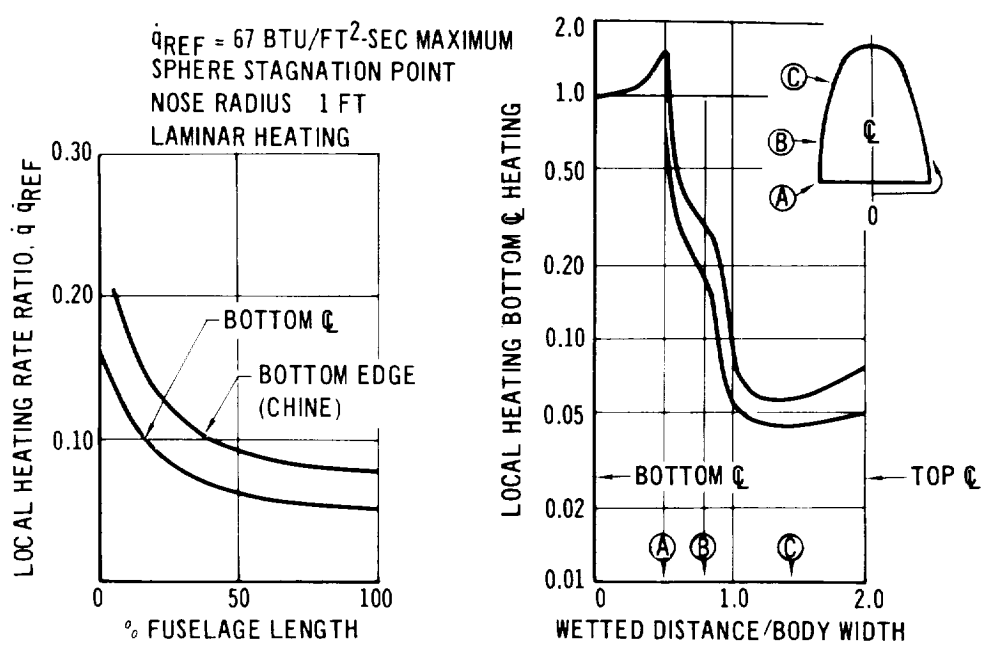

Figure 5.3-1

WING HEATING DISTRIBUTION
$\alpha = 60^0$

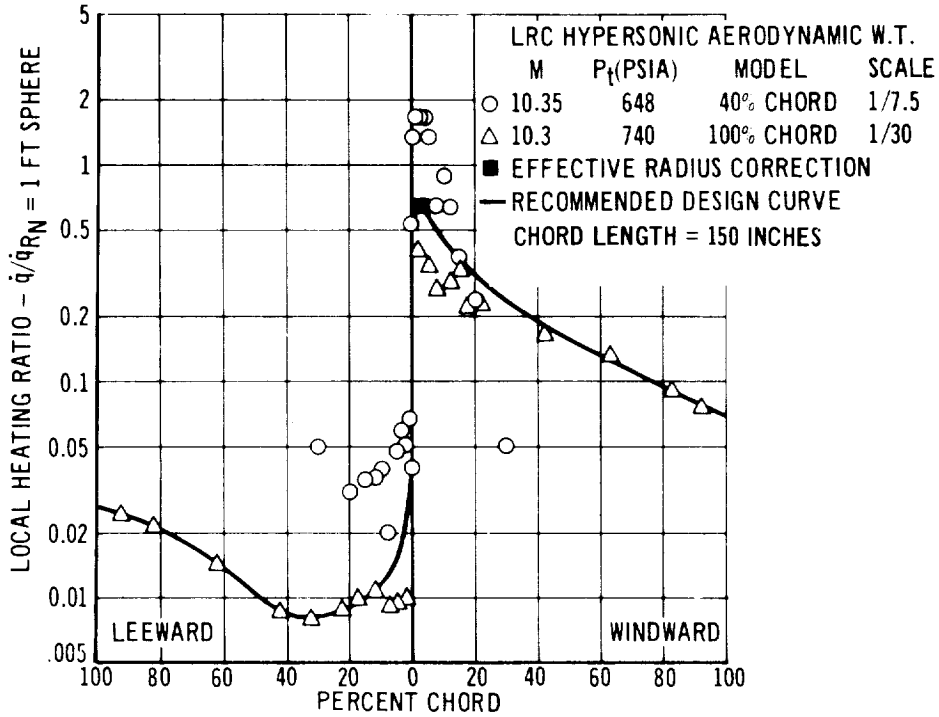

Figure 5.3-2

The wing data shown are from a 100% chord model and a 40% chord model tested by NASA-MSC at NASA-LRC. The 100% chord model was too small to obtain accurate heating data in the very small region of the leading edge because of instrumentation limitations. The 40% chord model improved data accuracy in the wing leading edge, however when tested at high angles of attack the shortened model caused an improper shock shape and heating distribution which invalidated the data forward of 20% chord as indicated. The solid line used for design purposes in the figure has a maximum local heat flux ratio of .667 at approximately 2% of chord on the windward side.

The method of obtaining this maximum value of .667 may be outlined as follows: It was assumed that the flow field over the forward 40% portion of the wing at the low angle of attack was uninfluenced by the lack of the aft portion of the wing. This data at 15° angle of attack was then used to determine an effective heating radius for the leading edge of the wing. This effective heating at 15° angle of attack was ratioed to the actual radius in the local stagnation region at 60° angle of attack. The square root of the radius ratio was then applied to the 15° data to obtain the effective radius correction shown in the solid square of this figure for $\alpha = 60°$; i.e., .667. Several other approaches of correcting the circled test data with an actual or effective leading edge radius at low angle of attack compared to the actual flow radius at high angle of attack provided a similar heating multiplier.

To determine local heating rates for chord lengths other than 150 inches, a square root ratio was used for the actual chord link compared to the 150 inch chord length, assuming laminar flow on the wing. In the regions of interference heating, multipliers were used to account for the higher heating rates in these areas. Interference heating is discussed in Section 5.3.4. Figures 5.3-3, 5.3-4 and 5.3-5 illustrate similar heating distributions on the wing for angles of attack of 45°, 30° and 15°

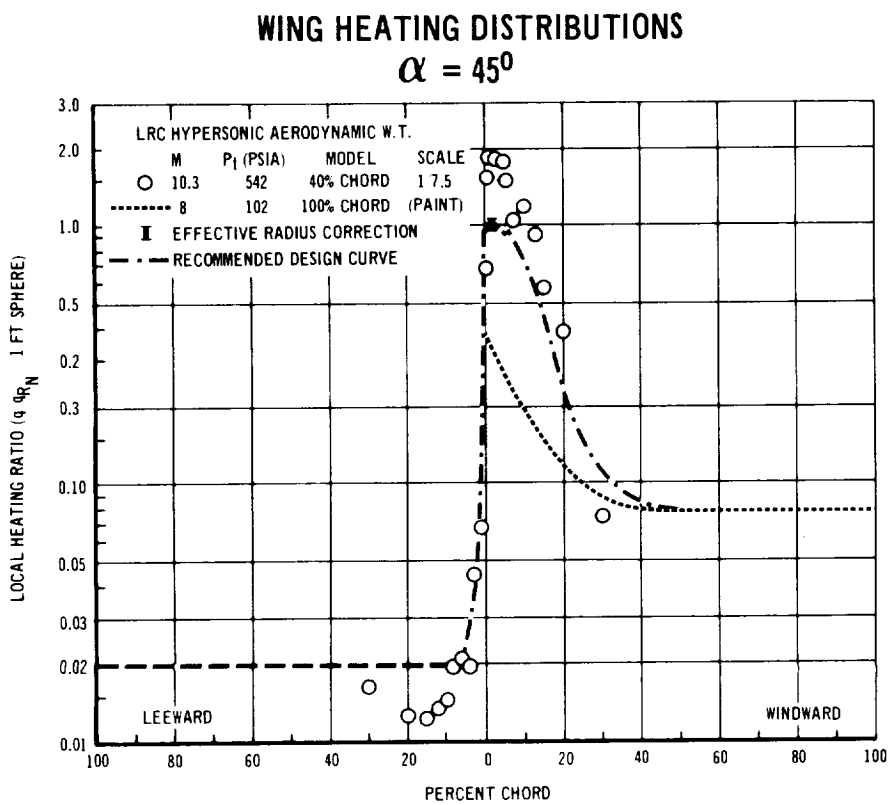

Figure 5.3-3

WING HEATING DISTRIBUTIONS
$\alpha = 30^0$

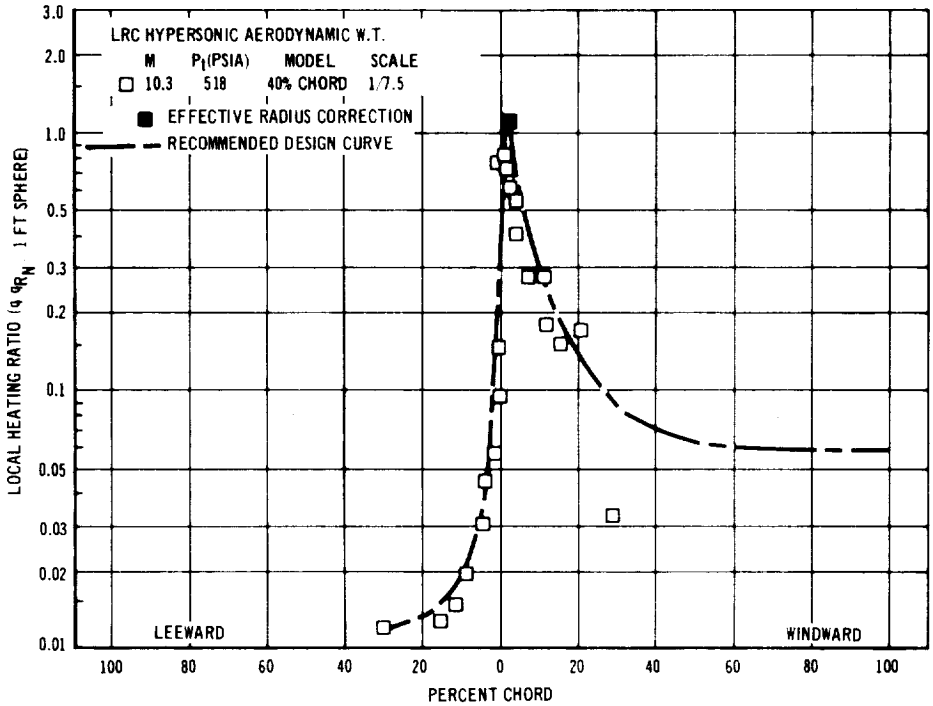

Figure 5.3–4

WING HEATING DISTRIBUTIONS
$\alpha = 15^0$

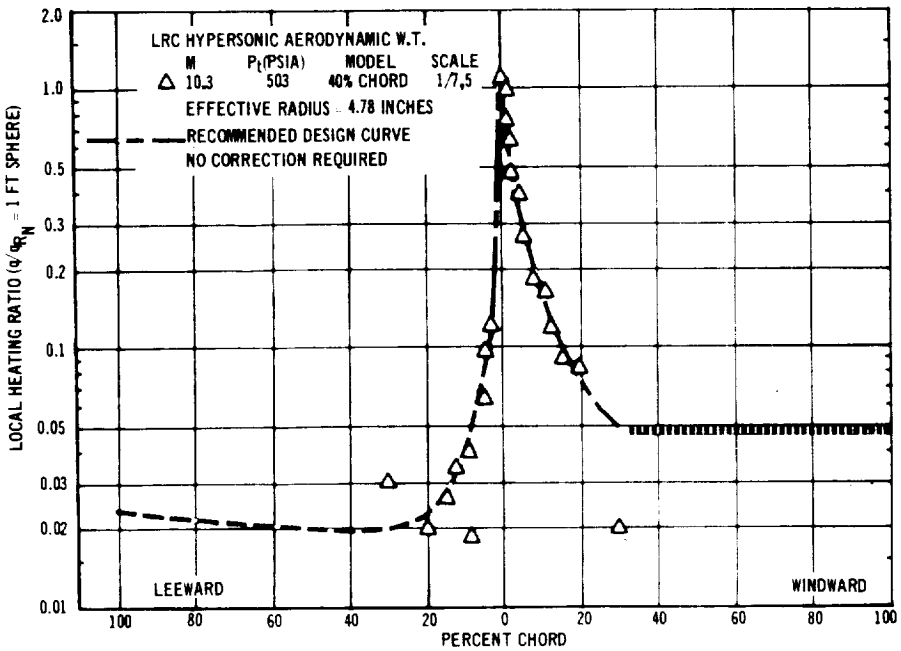

Figure 5.3–5

5.3.2 Fuselage Bottom Heating; Data and Theory Figure 5.3-6 illustrates the heating distribution on the bottom of the fuselage from MSC phase change paint tests and also indicates some of the effects of the fuselage bow shock interfering with the wing flow field. The paint test data provided by MSC has been compared to various test conditions for other similar shapes in Figure 5.3-7. All data in this figure has been normalized for 150 ft fuselage length. The data provided by MSC from their paint tests at a 60° angle of attack are shown on the lower portion of the figure. A line has been drawn through the upper side of this paint data and has been used for design purposes in this study.

MSC PAINT TEST DATA
Bottom Surface Heating Distribution

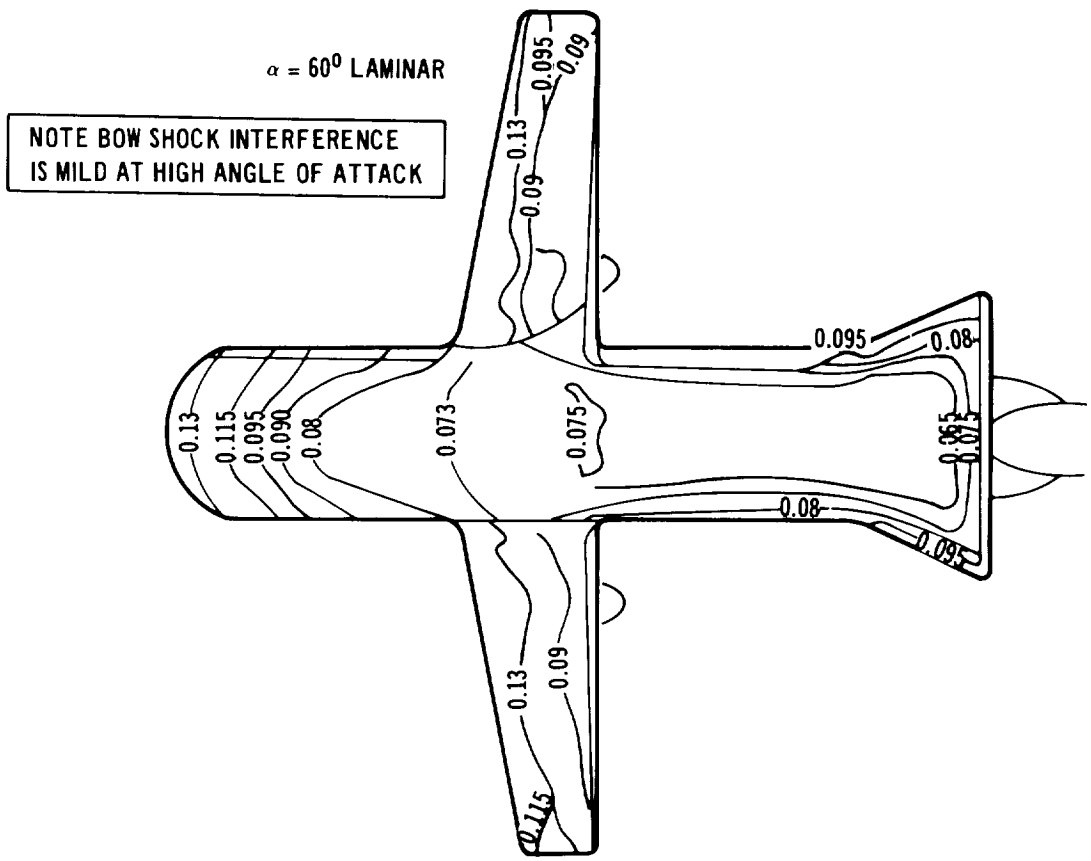

Figure 5.3-6

COMPARISON OF LAMINAR CENTERLINE HEAT TRANSFER DATA WITH THEORY

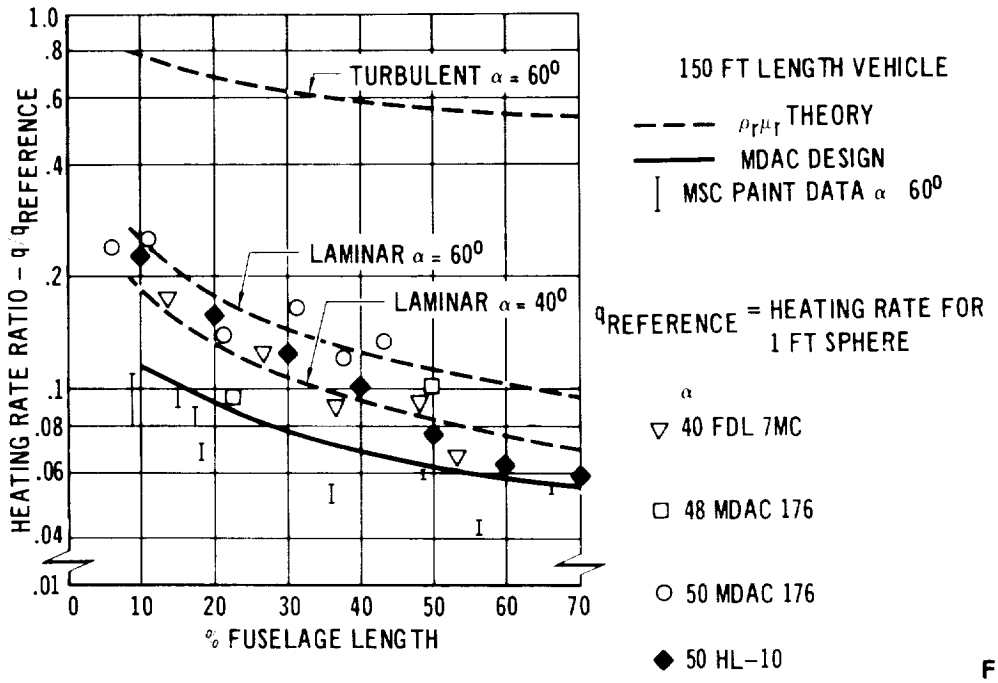

Figure 5.3-7

Above the design line are two Rho-Mu theory lines for angle of attacks of 40 and 60 degrees assuming laminar heating, and another line near the top of the figure for 60° turbulent heating at low Reynold's number. Several of the data points for other vehicle shapes are also indicated and they agree fairly well with the Rho-Mu theory that considers cross flow and a delta wing with a sweep angle of 80°. However, in all fairness it should be noted that the MSC fuselage is a very flat bottom, sharp edged shape. The data for the FDL 7 MC and the MDAC176 vehicle that are shown have fuselage shapes that are more arc-rounded on the bottom and have larger radii on the edge of the fuselage in the chine regions. One illustration for the HL10 shape at 50° angle of attack is indicated in the solid symbols. The HL10 is quite rounded in front and has large leading edge radii in the front fuselage, and becomes quite flat on the bottom near the rear end of the fuselage. Notice that the data for the HL10 does drop below the Rho-Mu theory and approximates the line used for design purposes at the aft end of the fuselage where the HL10 has a wide flat bottom.

5.3.3 Laminar Fuselage Heating Figure 5.3-8 is a correlation of considerable data using local momentum thickness Reynold's number divided by local Mach number and plotted versus angle of attack. This relationship is used to determine where laminar heating ends and transition to turbulent heating starts. Numerous wind tunnel data are shown, and several points from three flight test vehicles are included, however, the flight data are not identified to keep this figure unclassified The MSC paint tests at 60° angle of attack are indicated on the right of the figure, and it should be emphasized that these tests accurately simulated the local Reynold's number for the low w/s vehicle configuration under consideration. This figure indicates that at 60° angle of attack the MSC configuration has laminar flow by this criteria. Laminar flow was assumed for the entire bottom in this study.

FLOW FIELD IS LAMINAR FOR MSC $\alpha = 60^0$ DESIGN ENTRY

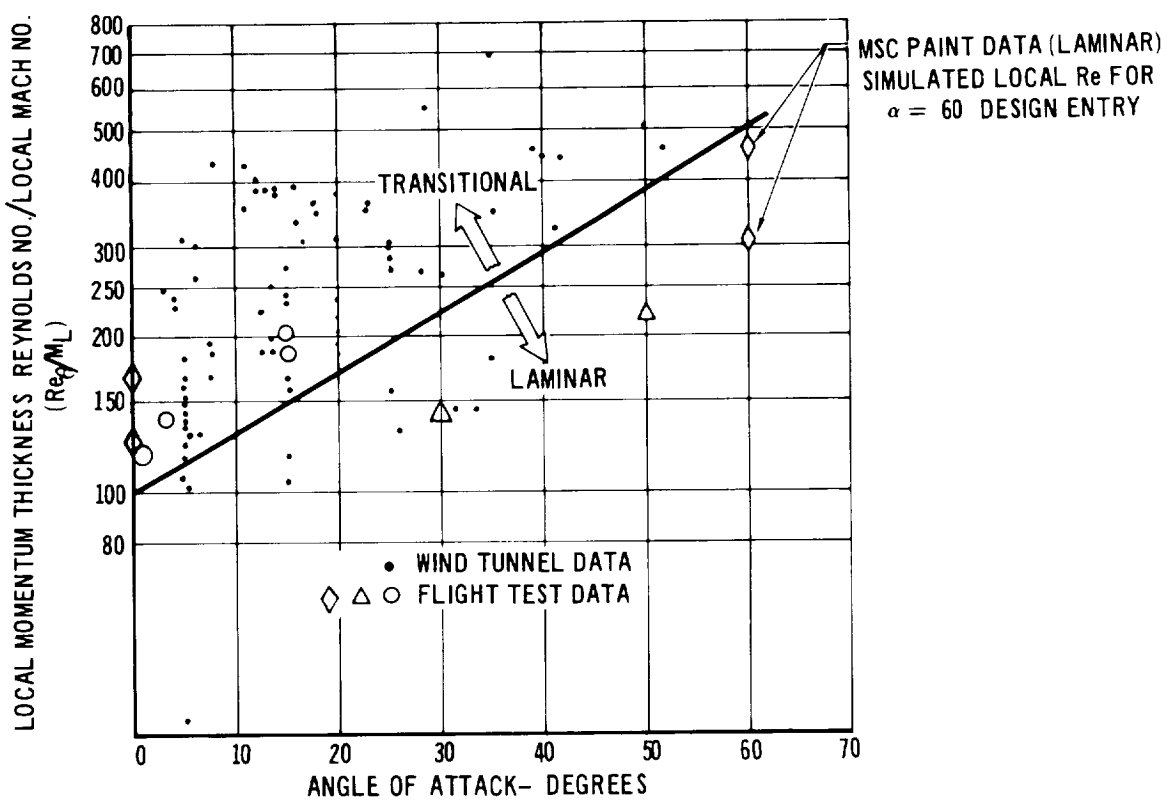

Figure 5.3-8

5.3.4 Flow Interference Effects Figure 5.3-9 is a summary of the MSC phase change paint test data illustrating the fuselage interference heating of the flow from the wing at the angle of attack of 60°. The lowest heating multiplier indicated at 0.17 causes an equilibrium skin temperature of approximately 870°F. At the point where the wing joins the fuselage, the local heating multiplier is roughly twice the lowest value and approaches 0.034, which causes a temperature of 1100°F. One foot above the chine line the local heating multiplier of 0.05 is indicated, which produces a skin temperature of 1270°F.

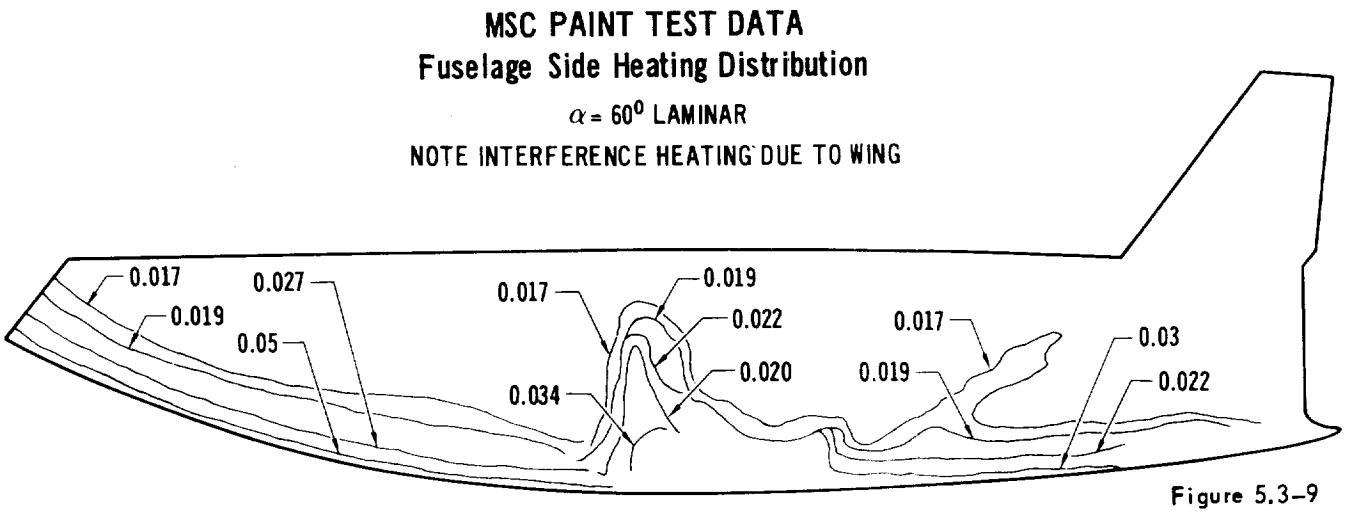

Figure 5.3-9

A summary of the data obtained by MSC on wing interference heating shown in Figure 5.3-10; two regions are indicated. Region one has two zones and it is thought that this shape is caused by the fuselage bow shock wave combining with the shock wave and flow field around the wing. Region one moves inboard toward the fuselage as the angle of attack is increased.

At an angle of attack of 60° the outer edge of the interference region is approximately 35% of the exposed wing span length. Interference region two is caused by boundary layer flow along the fuselage intersecting with the wing. The lower figures show the heating rate increase (or the heating rate multiplier) that is used as a function of chord length for region one and region two at three angles of attack, 15°, 45°, and 60°. Currently there is uncertainty regarding extrapolation of the interference multiplier for the first 15° of chord. However, recall that this is the leading edge region of the wing, where the carbon/carbon replaceable slipper is used. In spite of the uncertainty in extrapolation of this heating data, the replaceable slipper has been sized to endure more than one flight. The expected life of the carbon slipper will be discussed in Section 5.5.

WING – FUSELAGE INTERFERENCE HEATING

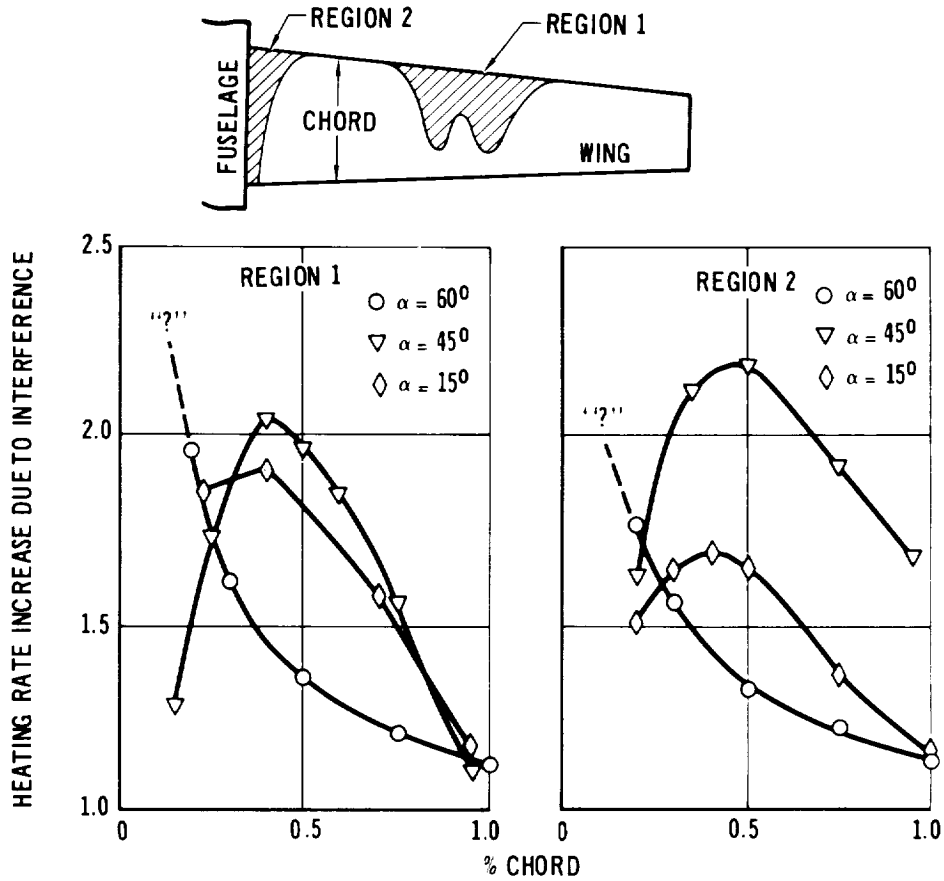

Figure 5.3-10

The heating rate uncertainties on the fuselage and the wing are related to temperatures and summarized in figure 5.3-11. On the left hand side is a comparison for the bottom of the fuselage. The baseline paint data that has been used for design purposes is indicated providing temperatures that range from 1700°F down to 1300°F on the bottom centerline of the fuselage. A similar line is indiated for the chine line. Also indicated on this figure are the temperatures that would be predicted using the Rho-Mu theory with cross flow for delta wing having a sweep angle of 80°. In this case, the temperatures range from 2400°F down to 1750°F.

UNCERTAINTIES IN PREDICTION OF ORBITER TEMPERATURES

$\alpha = 60^0$ Entry Trajectory 150 Ft Fuselage

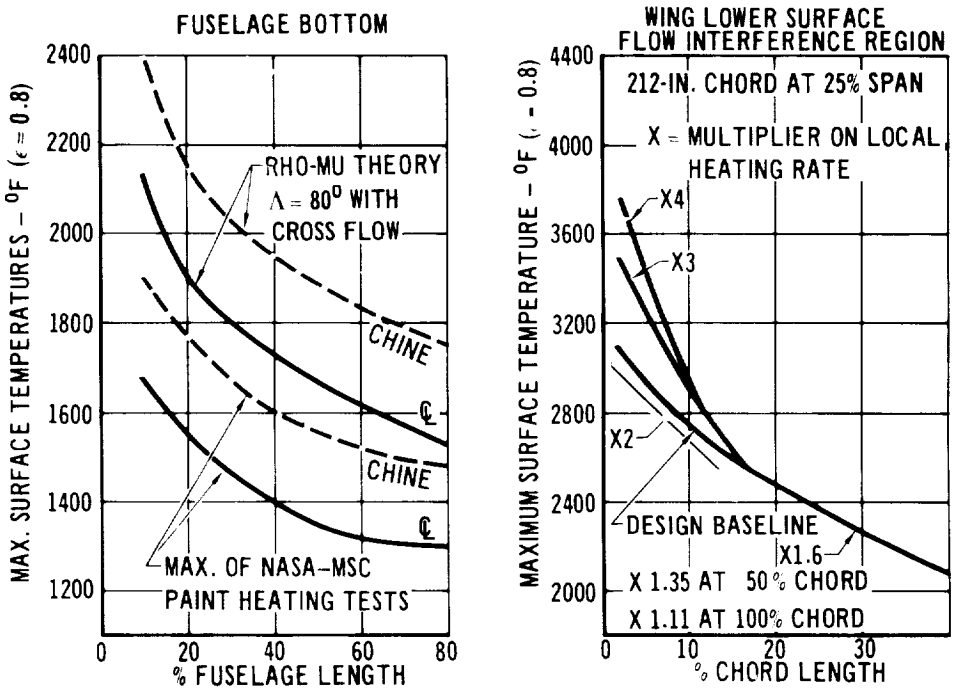

Figure 5.3–11

At the present time, some uncertainty exists as to the precise temperature predictions that would be used for the bottom of the fuselage. However, it should be emphasized that the TPS materials that have been selected are able to withstand the entire range of temperatures indicated in this figure. On the right hand side of the figure, the uncertainties on the wing heating in the interference region are summarized by relating these uncertainties to maximum surface temperatures. Note that the heating rate uncertainty is concentrated in the first 15% of chord length where the carbon/carbon replaceable slipper is used to accommodate the uncertainty of the temperature which is related to the carbon surface recession and the life of the slipper. If a multiplier of four is used on the local heating rate for the wing, the peak entry temperatures near the leading edge approach 3800°F. For the design baseline, a multiplier of two was used in the leading edge regions for the local heating rates, and the peak temperatures approached 3100°F.

5.4 Design Trajectories and Surface Temperature Predictions - The local heating distributions that were determined and illustrated in Section 5.3 have been combined with the design trajectories presented in Figure 5.4-1 to obtain local temperature distributions over the booster and orbiter surfaces for each of the mission phases with significant vehicle heating. In Figure 5.4-1 the stagnation point heating rates referenced to a sphere with a 1 foot radius are indicated for the orbiter and booster. Orbiter separation occurs at an ideal velocity of approximately 15,000 fps. Reference heating on the orbiter during entry reaches a maximum of 67 BTU/ft^2-sec and produces a total heat of approximately 25,100 BTU/ft^2 using the Detra Kemp and Riddell theory (referenced to a sphere with a 1 foot radius). The total heat and heating time of approximately 900 seconds are similar to the Gemini entry conditions.

DESIGN HEATING RATE HISTORIES

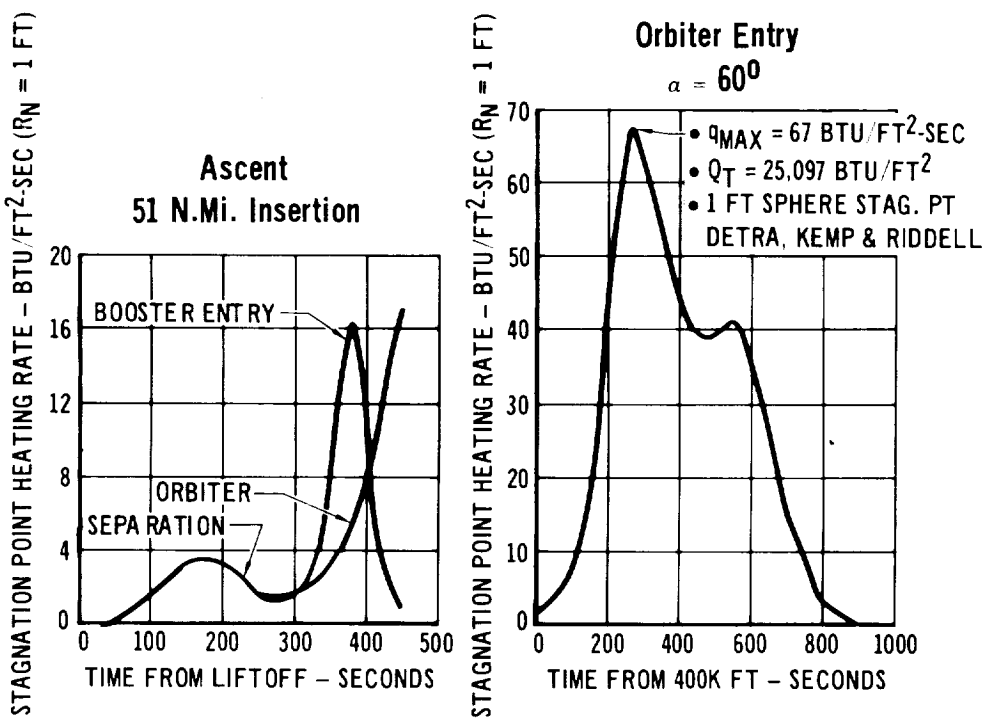

Figure 5.4-1

Figure 5.4-2 is the first of a series of figures that summarize the temperature distribution on the booster and orbiter during each of the mission phases where significant heating occurs. During launch, in the stacked configuration, maximum temperatures of roughly 2000°F occur on the booster nose cap and upper tail leading edge. However, 80% of the entire exposed surface is below 800°F. Considerable uncertainty currently exists regarding temperatures in the interference region which is shown in this figure with crosshatching. In the interference regions, a heating multiplier of 4 has been used to compute temperatures in most of these areas with the exception of a multiplier of 2 used on the orbiter tail. The interference heating is caused by a bow shock off of the nose of the orbiter intersecting and sweeping the nose region of the booster as the vehicle moves through various Mach numbers. Interference heating is also caused by shocks and from the booster nose intersecting the orbiter, and from the various wings and tails. Entry of the booster produces very mild temperatures. Eighty-five percent of the surface is below 800°F. Only the areas on the lower wing and tail experience temperatures above 1200°F. These temperatures are summarized for the booster entry in Figure 5.4-3.

BOOSTER AND ORBITER TEMPERATURES
Launch to Separation

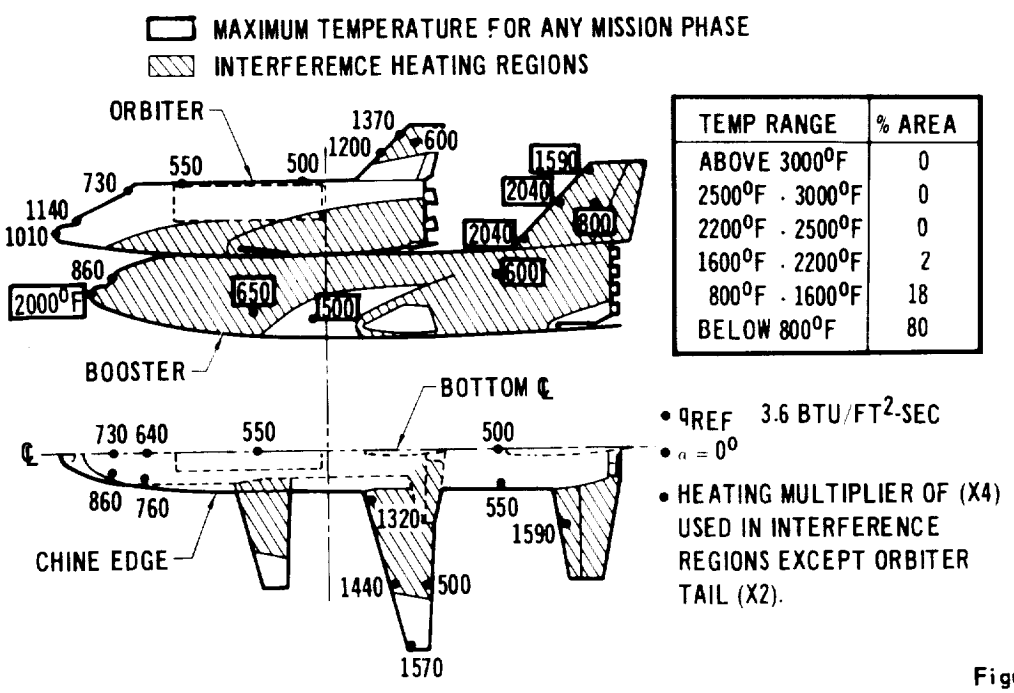

TEMP RANGE	% AREA
ABOVE 3000°F	0
2500°F - 3000°F	0
2200°F - 2500°F	0
1600°F - 2200°F	2
800°F - 1600°F	18
BELOW 800°F	80

Figure 5.4-2

BOOSTER TEMPERATURES
α = 60° Entry)

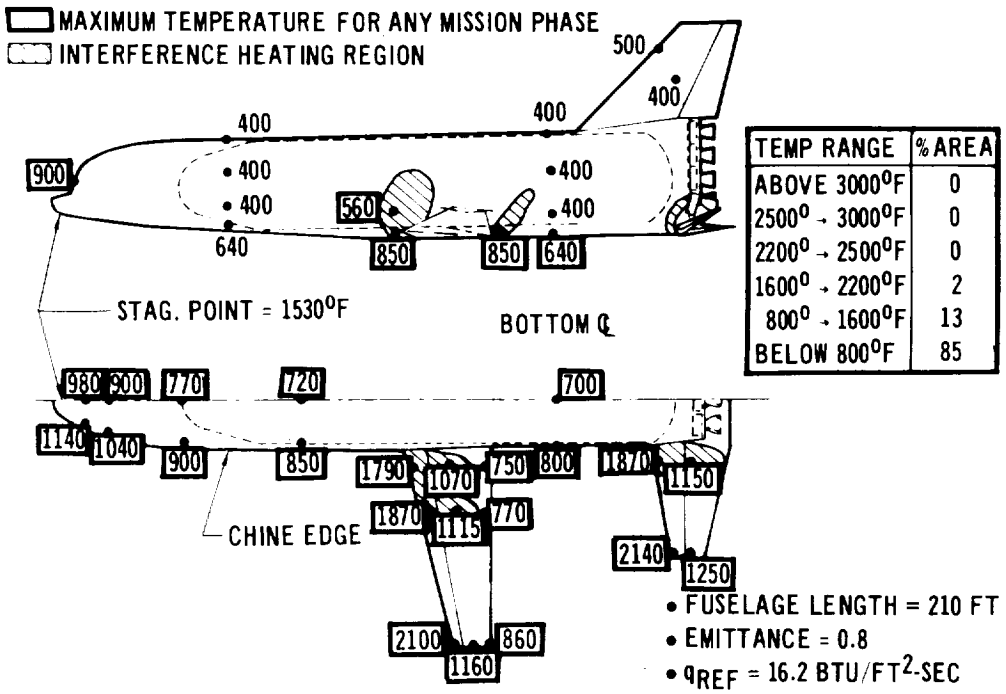

TEMP RANGE	% AREA
ABOVE 3000°F	0
2500° → 3000°F	0
2200° → 2500°F	0
1600° → 2200°F	2
800° → 1600°F	13
BELOW 800°F	85

Figure 5.4-3

Figure 5.4-4 summarizes the orbiter temperatures during the period of time after separation up until insertion into a 51 n.m. orbit. The angle of attack is approximately zero at orbital insertion. You will note that the temperatures on the upper surface of the orbiter during ascent are the most critical for any mission phase. Changes in the insertion altitude have a strong effect on the orbiter temperatures. If the insertion altitude was 45 n.m. rather than 58 n.m. the reference heating rate would be ten times larger. An insertion altitude of 51 n.m. permits the use of titanium on the majority of the upper surface of the orbiter. Entry of the orbiter at an angle of attack of 60° produces the most severe temperatures over most of the vehicle surface as illustrated in Figure 5.4-5. However, this high angle of attack still maintains approximately 50% of the exposed area below 800°F, and only 1% of the area is calculated to be above 3000°F. Where temperatures are above 2500°F, the carbon/carbon materials have been used and refurbishment is currently considered.

ORBITER TEMPERATURES
(Ascent to 51 N.M. Insertion + Coast to Orbit)

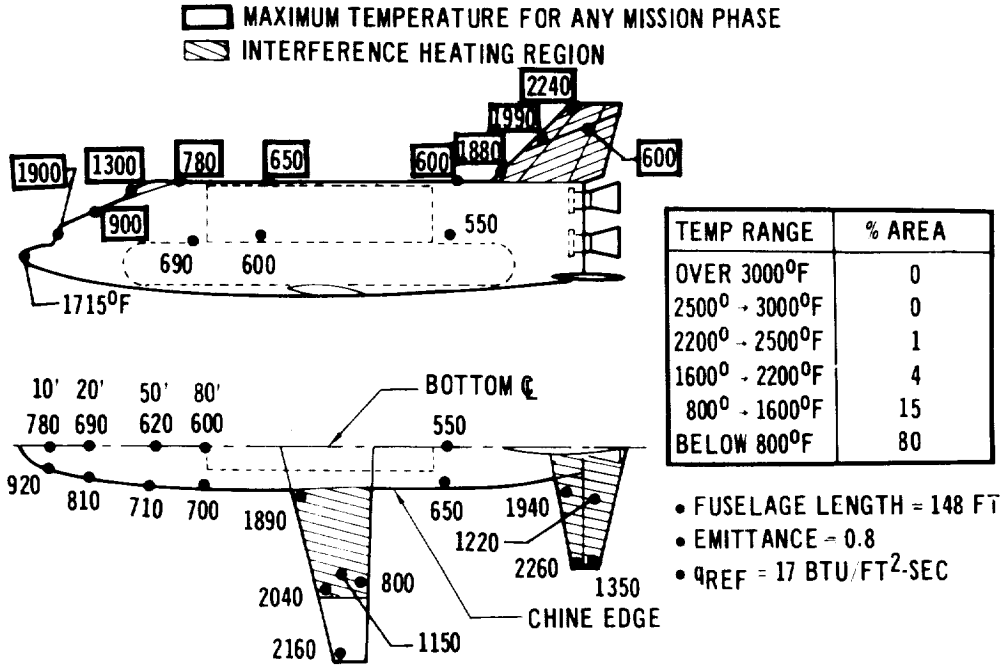

TEMP RANGE	% AREA
OVER 3000°F	0
2500° → 3000°F	0
2200° → 2500°F	1
1600° → 2200°F	4
800° → 1600°F	15
BELOW 800°F	80

- FUSELAGE LENGTH = 148 FT
- EMITTANCE = 0.8
- q_{REF} = 17 BTU/FT^2-SEC

Figure 5.4-4

ORBITER TEMPERATURES
α = 60° Entry

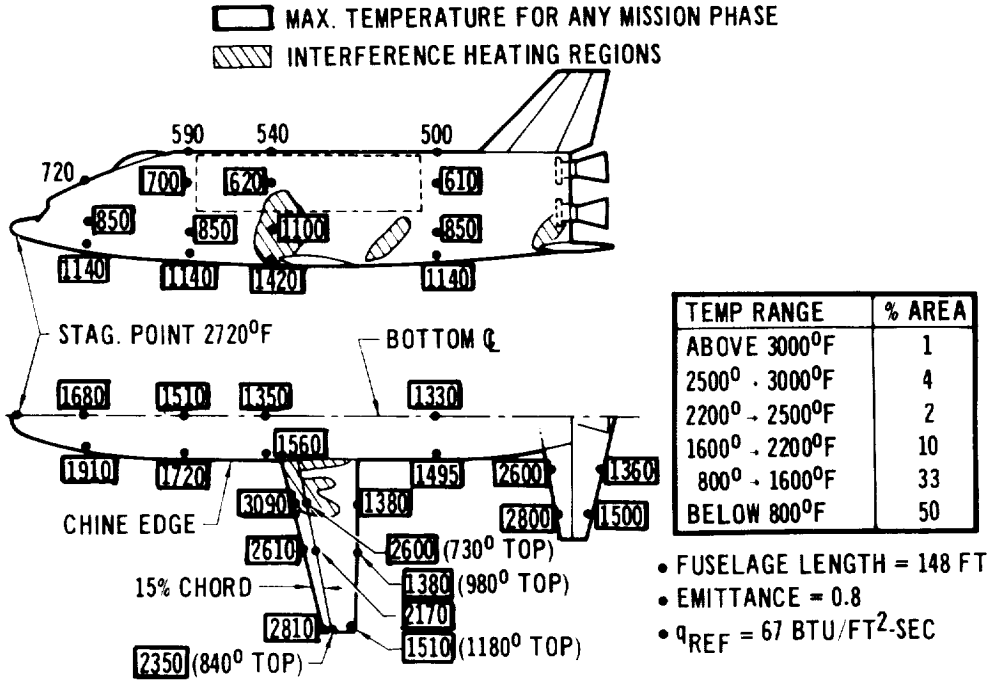

TEMP RANGE	% AREA
ABOVE 3000°F	1
2500° - 3000°F	4
2200° → 2500°F	2
1600° → 2200°F	10
800° → 1600°F	33
BELOW 800°F	50

- FUSELAGE LENGTH = 148 FT
- EMITTANCE = 0.8
- q_{REF} = 67 BTU/FT^2-SEC

Figure 5.4-5

5.5 TPS Material Evaluations - In this section the reusability of some of the thermal protection materials that have been discussed earlier will be illustrated. Currently there is uncertainty regarding the absolute limit temperatures for many of these materials when you consider repeated reuse for 100 flights. However, there are both metallic and non-metallic materials that are adequate for the majority of the vehicle surface where temperatures are predicted to be below 2500°F. A summary of the current estimates of temperature limits for reusable TPS materials is illustrated in Figure 5.5-1. McDonnell has extensive test experience and flight vehicle experience with coated columbium panels. For example, in a test program coated columbium panels have been exposed to hour long entry heating environments for 49 repeated simulated flights. Several of the hardened compacted fiber (HCF) insulation materials have been exposed to multiple heating simulating 5 to 10 entry flights. The mullite HCF is a specific crystaline form of alumina and silica that has approximately 300°F higher melting point than almost pure silica. Where temperatures exceed 3000°F, oxidation inhibited carbon/carbon has been considered and restricted life for a selected design thickness is expected. The actual shape of the carbon/carbon curve above 2500°F is dependent on the type of oxidation inhibitors that are incorporated into the carbon-carbon. The effect of oxidation inhibitors on the carbon will be illustrated in this section.

TEMPERATURE LIMITS OF REUSABLE TPS MATERIALS

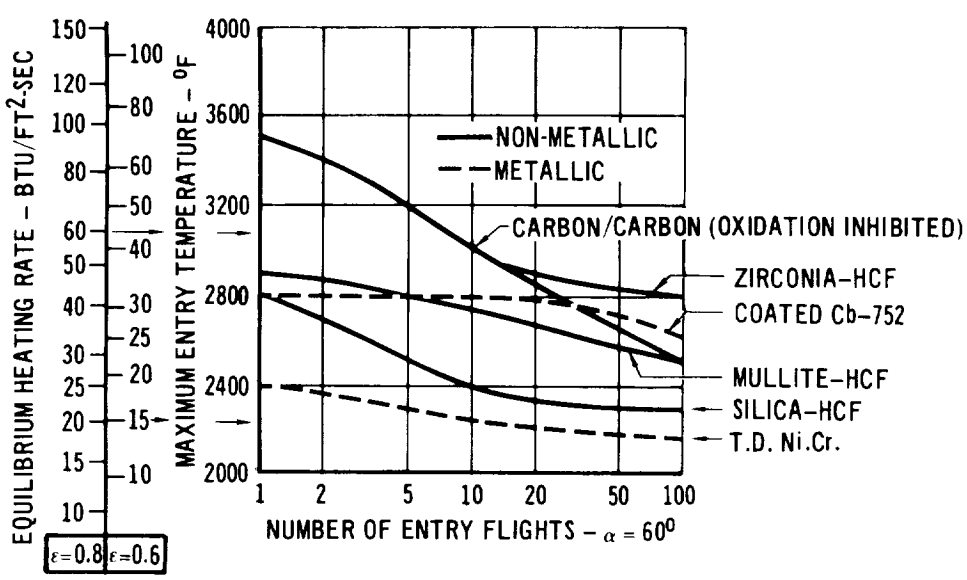

Figure 5.1-1

5.5-1 HCF Insulation - Figure 5.5-2 summarizes the capabilities of the HCF insulation. The acoustic and g-load capabilities of the HCF have been demonstrated by repeated long time exposures. The 155 db and 10 g capabilities are adequate for the Space Shuttle mission environments on the fuselage. The HCF type of insulation has been used in the base region of the Saturn V vehicles to serve as the base heat protection for the rocket exhaust gases. This flight experience illustrates the acoustic and g-load capabilities of the HCF insulation materials. On the left side of this figure, thermal conductivity data is presented for several of the HCF material compositions with different densities. The design line for a 15 pcf silica material is indicated. The reheat capabilities of HCF are illustrated on the right. The test sample had a unit weight of 1 psf and was heated in the first test at a constant flux of 10 BTU/ft^2-sec. In the second entry heating simulation, the sample was exposed to a heat flux increased to 20 BTU/ft^2 sec. In the third test, the sample was exposed to a heat flux of 10 similar to the first test, and note that the HCF thermal performance was indeed very similar to the first test. More testing on these HCF materials is necessary to determine the absolute limits of acoustic noise, g-load and temperature when exposed to repeated cycles of the mission environments.

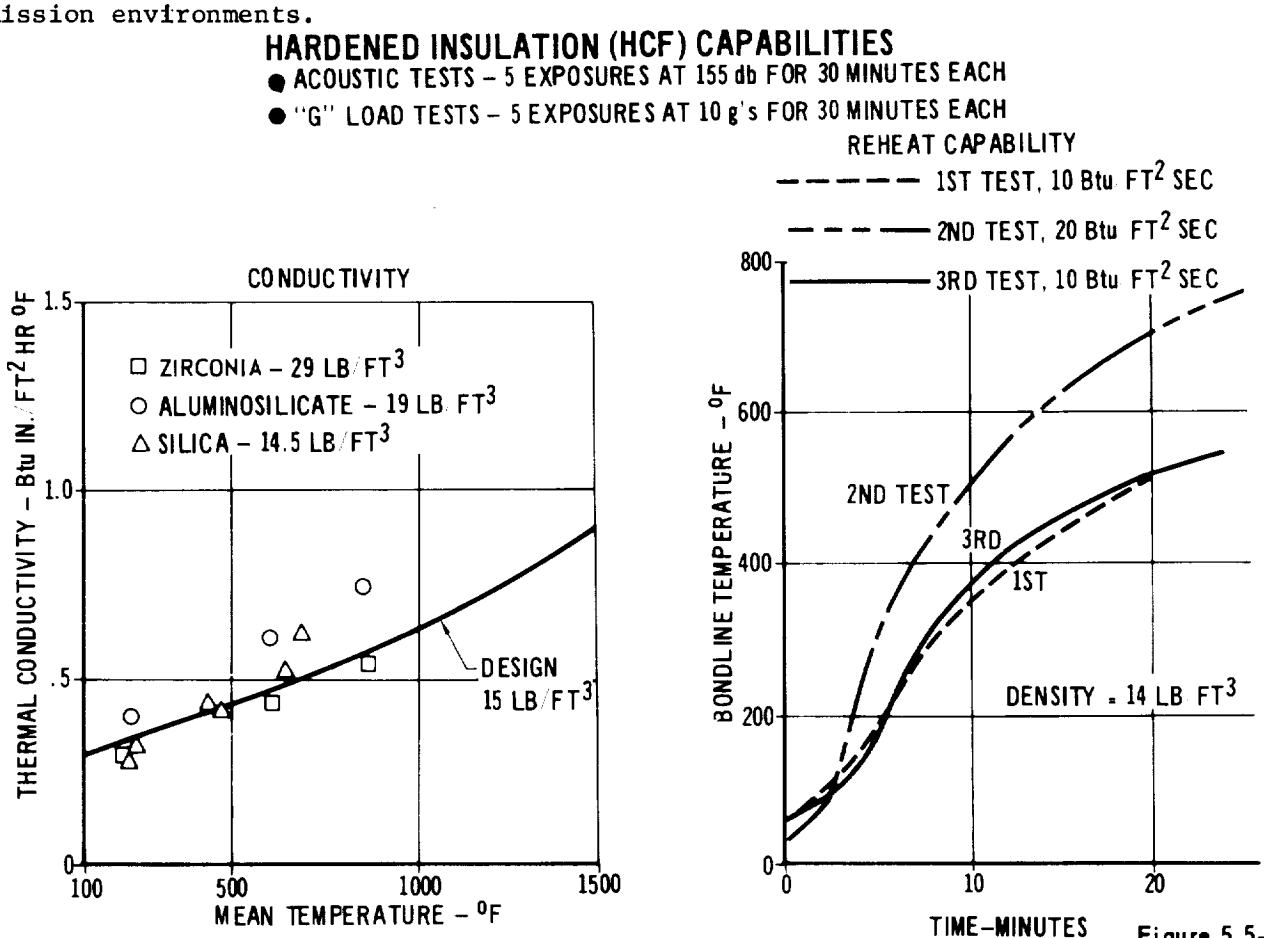

Figure 5.5-2

5.5.2 Carbon - Figure 5.5-3 illustrates that various types of inhibited carbon have considerably lower surface recession than pure graphite. The oxidation rate for pure graphite is presented over a wide span of temperatures and pressures. These curves are normalized so that the surface recession is compared to the amount lost by diffusion. In the region where the graphite line is horizontal, surface recession is limited by diffusion rate of oxygen to the graphite surface. At higher temperatures, sublimation occurs. At lower temperatures recession is related to the chemical reaction rates. The various test data for inhibited carbon indicate that the surface recession rate is reduced to roughly 10% that of pure graphite at 3000°F. At 4000°F, the inhibited carbon rate is approximately 30% of the pure graphite. The molded JTA is a commercial form of inhibited carbon. Some of the data for this JTA material are included along with recent experimental work on other methods of inhibiting carbon oxidation. There is a considerable need for additional development work in this area to determine: what is the best approach to inhibiting carbon oxidation; how reusable these materials are when repeatedly exposed to entry environments; and what is the way in which these inhibitors break down at higher temperatures.

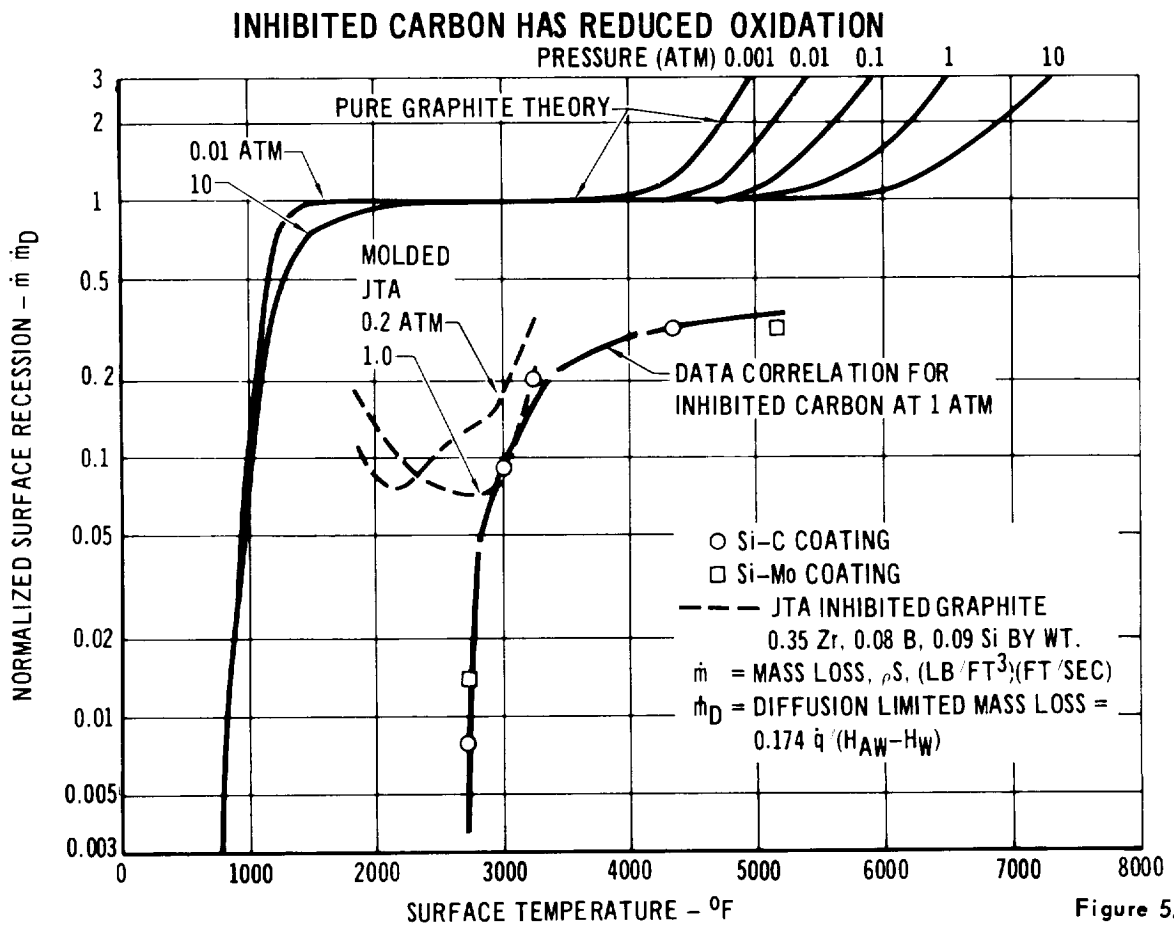

Figure 5.5-3

In the next several figures, the experimental test results for several forms of inhibited carbon are presented. Some of these tests were conducted at McDonnell, the rest of these data are available in the open literature. In Figure 5.5-4 comparative test results of carbon/carbon cloth laminates with inhibitors that reduce reduce oxidation are compared to oxidation of a similar material without inhibitors. The illustration indicates a dramatic difference in weight loss for the sample exposed to conditions that provide approximate surface temperatures of 3000°F. Although this test was conducted with an oxyacetylene torch and is not directly similar to an entry heating environment, it was comparative in nature and does dramatize the type of reduction in surface recession that might be experienced with the carbon/carbon materials. The weight loss for inhibited carbon is approximately 1/10 the weight loss for pure carbon at 3000°F. These test approximate the results indicated in Figure 5.5-3. Figure 5.5-5 presents a summary of data available from the literature for pure graphite. A summary of the weight loss is shown after 10 minutes of exposure for a variety of temperatures and pressures. Figure 5.5-6 presents similar test data over the same range of pressures and temperatures for an inhibited form of carbon called JTA. A ratio of the data from Figure 5.5-5 and 5.5-6 is indicated in Figure 5.5-3 and labelled "JTA inhibited graphite."

MUST PROTECT CARBON-CARBON FROM OXIDATION

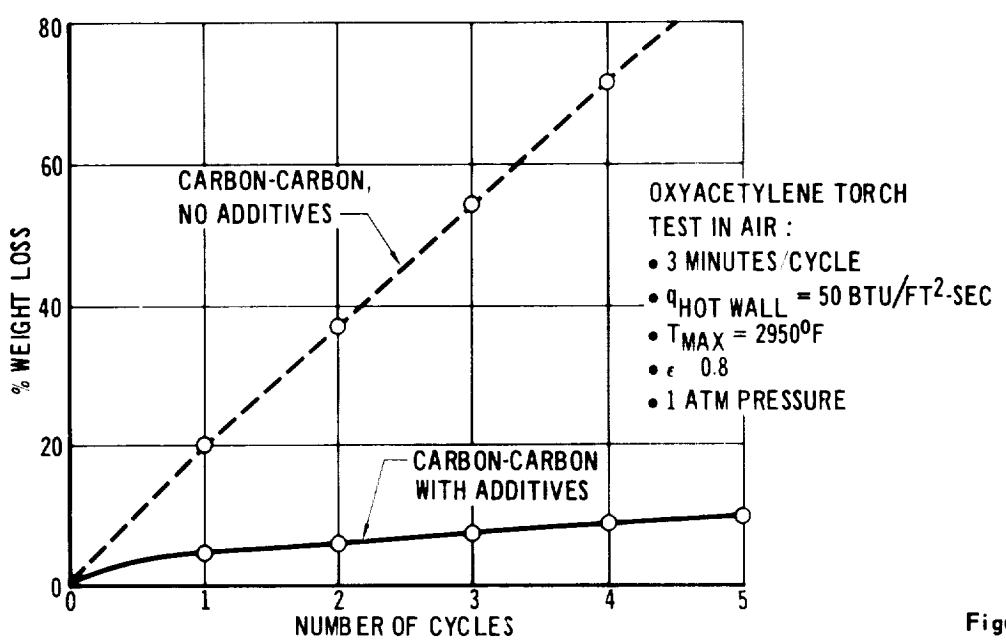

Figure 5.5-4

OXIDATION CHARACTERISTICS OF ATJ GRAPHITE

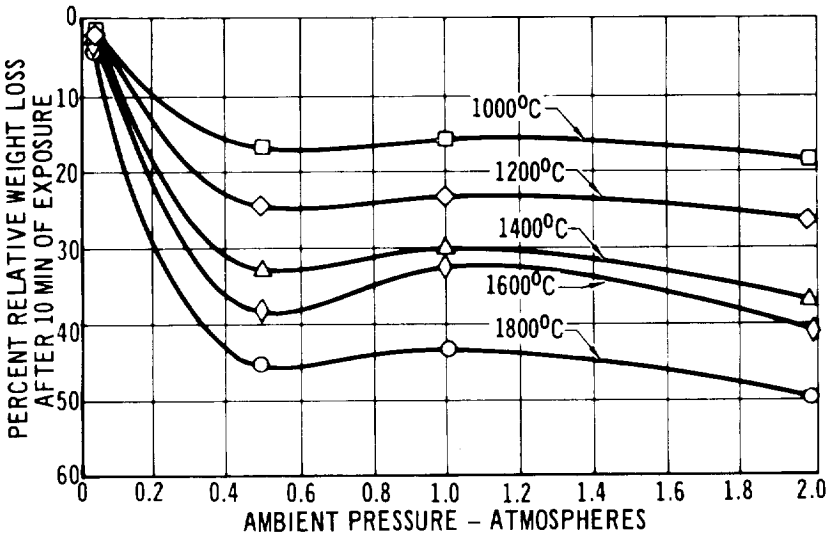

TEST CONDITIONS:
SAMPLE SIZE: ¼ x ¼ x 2¼ INCHES
AXES OF ALL SAMPLES PERPENDICULAR TO THE GRAIN
RESISTANCE HEATING
FREE LENGTH OF SAMPLE BETWEEN TERMINALS: 1½ INCHES
HEATING TIME: 60 SECONDS (NOT COUNTED AS OXIDATION TIME)
SURFACE TEMPERATURE IN HOT ZONE KEPT CONSTANT
WEIGHT LOSS REFERRED TO TOTAL SAMPLE
EACH POINT OBTAINED FROM SINGLE SAMPLE

REFERENCE:
ML-TDR-64-125, VOL. II
OCTOBER 1964, PAGE 109

Figure 5.5-5

OXIDATION CHARACTERISTICS OF JTA GRAPHITE

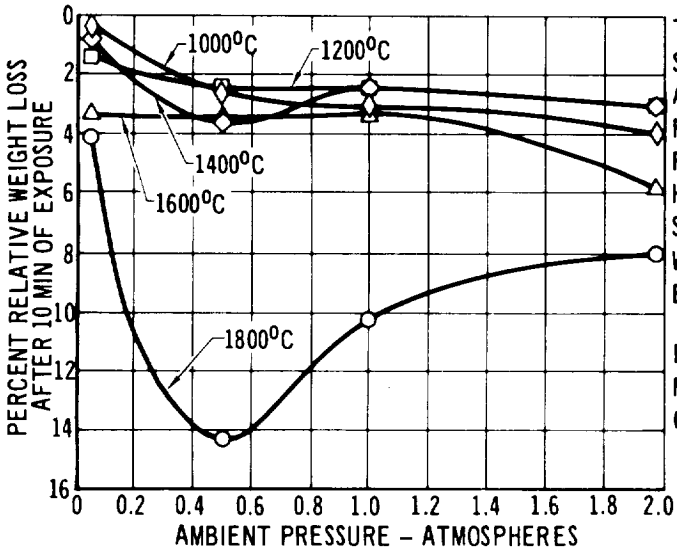

TEST CONDITIONS:
SAMPLE SIZE: ¼ x ¼ x 2¼ INCHES
AXES OF ALL SAMPLES PERPENDICULAR TO THE GRAIN
RESISTANCE HEATING
FREE LENGTH OF SAMPLE BETWEEN TERMINALS: 1½ INCHES
HEATING TIME: 60 SEC (NOT COUNTED AS OXIDATION TIME)
SURFACE TEMPERATURE IN HOT ZONE KEPT CONSTANT
WEIGHT LOSS REFERRED TO TOTAL SAMPLE
EACH POINT OBTAINED FROM SINGLE SAMPLE

REFERENCE:
ML-TDR-64-125, VOL. II
OCTOBER 1964, PAGE 109

Figure 5.5-6

Calculations have been made to predict the surface recession on the leading edge of the wing when exposed to entry at 60° angle of attack. In Figure 5.5-7, the analysis was performed for the one trajectory. A variety of surface temperatures were assumed to represent different areas on the wing. The surface recession predictions were made for pure graphite and later corrected to determine the effect if inhibited graphite were used. The maximum predicted temperatures are shown. Figure 5.5-8 represents a cross plot of previous calculations. The total recession of pure graphite and inhibited carbon is plotted versus the maximum temperature computed during entry. The dashed line represents the maximum temperatures that were programmed into the calculations, and the solid line represents the actual peak temperatures experienced in the analysis. The difference in these temperatures indicates that the actual temperature exceeded the input temperature because surface combustion was permitted to occur in the calculations. If a heating rate multiplier of 2 is used for the leading edge calculations, a temperature of 3,090°F is obtained. Entering this figure at that temperature, a cumulative surface recession on the leading edge of approximately .06 inches is indicated if pure carbon is used. However, the total recession for inhibited carbon would be approximately 1/10 that value or .006 inches. If the worst heating multiplier of 4 is used for leading edge temperature calculations, the prediction of 3780°F was obtained. Entering this figure at approximately 3800°F, indicates that approximately .06 inches of inhibited carbon would be consumed for each entry flight.

With a leading edge slipper thickness of .3 inches, an inhibited carbon material would endure several flights, even if the multiplier of 4 were used to predict temperatures. For example, if a heating multiplier of 4 were used, three flights would consume approximately 2/10 of an inch of the inhibited carbon leaving 1/10 of an inch of inhibited carbon remaining after three flights to satisfy the structural requirements on the slipper. If a multiplier of 2 is used for the temperature predictions, more than 30 flights would be required to consume 2/10 of an inch of inhibited carbon on the slipper. For this reason, the current slipper design is considered capable of at least 10 flights in region of uncertainty heating on the wing leading edge, which represents the first 15% of chord.

RECESSION HISTORIES OF STS CARBON LEADING EDGE

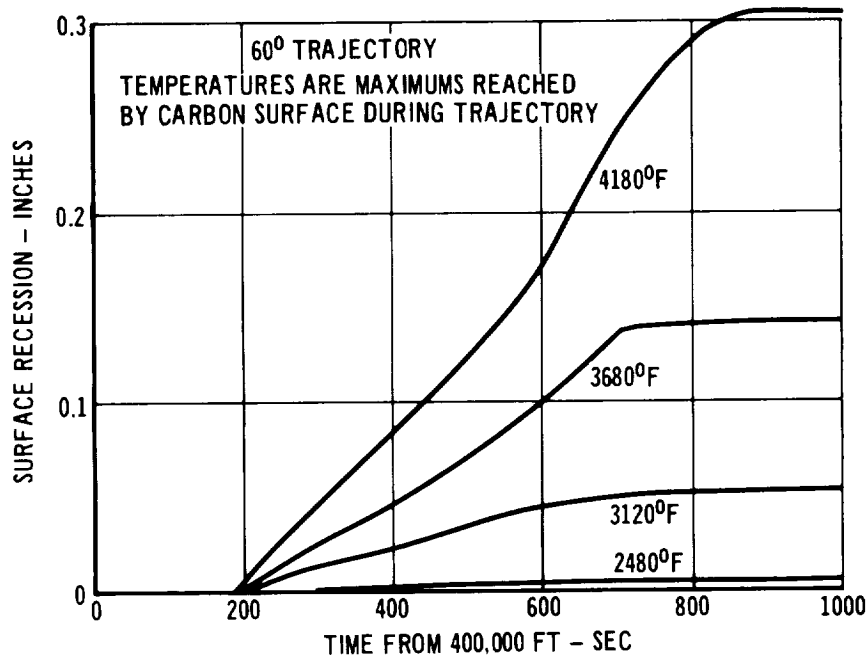

Figure 5.5–7

HEATING UNCERTAINTIES AFFECT SURFACE RECESSION
(α = 60° Trajectory)

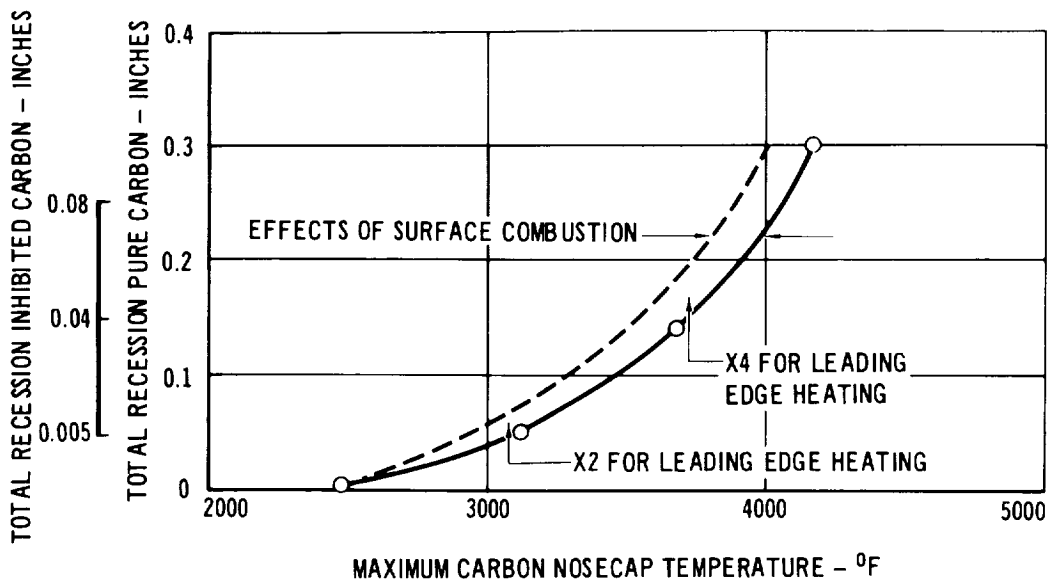

Figure 5.5–8

5.5.3 Insulation - Testing has been conducted to determine the amount of shrinkage for various types of insulation materials exposed to high temperatures for 30 minutes during each cycle simulating entry heating and heat soak during cruise. Certainly a small shrinkage is desired. If necessary, preshrinking of the material could be accomplished, however, this does increase the cost of insulation. Figure 5.5-9 presents the thermal conductivity data available in the literature for a low density fibrous insulation TG 15000. This material has an upper use limit of approximately 1,000°F, and is restricted to use behind honeycomb panels that are used to support the bonded HCF. In areas where insulation is used and temperatures exceed 1,000°F, dynaquartz or microquartz, are recommended.

THERMAL CONDUCTIVITY OF TG15000 FIBROUS INSULATION

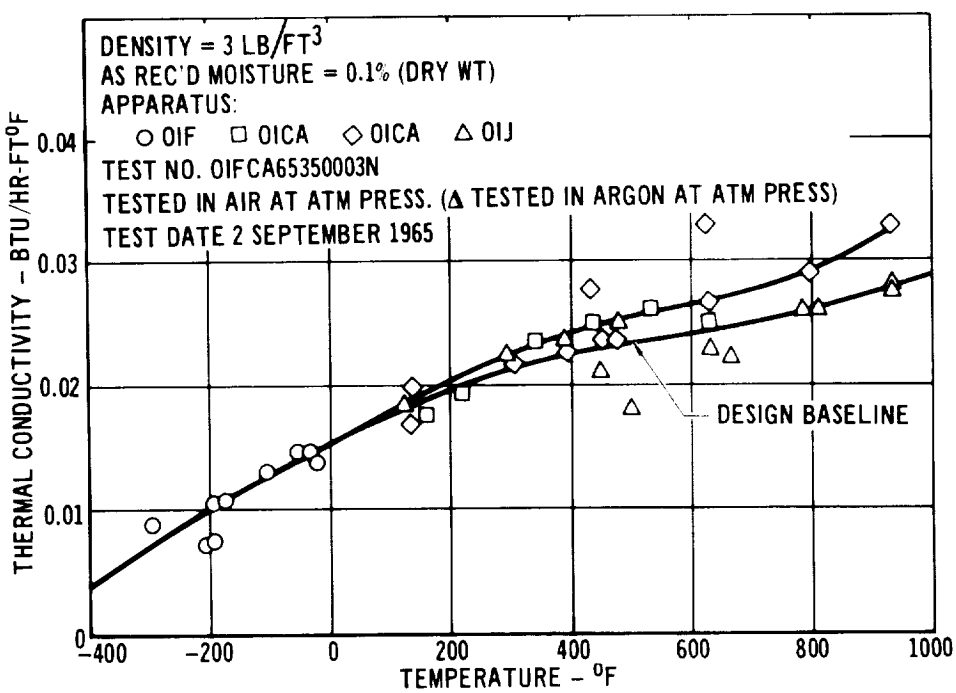

Figure 5.5-9

Figure 5.5-10 summarizes the temperature range for various structural and non-structural adhesives being considered for the Space Shuttle activity. The Normco 7343 adhesive is used to attach the cryogenic foam to the interior of the hydrogen tank. If changes in the foam are made to permit a higher tank temperature and relax the +200°F constraint on the TPS design, then a change in adhesive will also be necessary. The Epoxy EC2216 adhesive can withstand a higher temperature to +300°, and can accommodate the severe cold requirement when the tank is filled with hydrogen. The structural adhesives have an indicated upper limit of approximately 600°F to 700°F. Currently the design analysis imposes an adhesive limit of 500°F on predicted temperatures to guarantee maximum reuse capability and to provide some margin for uncertainty in the adhesive limits. Additional testing is necessary to determine the true limits on adhesive temperatures when exposed to multiple reuse loadings.

REUSABLE ADHESIVE CANDIDATES

MATERIAL	USABLE TEMPERATURE RANGE	
	STRUCTURAL ADHESIVE	NON-STRUCTURAL ADHESIVE
SILICONE DC 3145	–	–100 + 500°F
POLYURETHANE NARMCO 7343	–	–423 + 180°F
EPOXY-PHENOLIC HT-426	–423 + 600°F	–
POLYIMIDE FM-34	–423 + 700°F	–
EPOXY EC 2216	–	–423 + 300°F

Figure 5.5-10

In a similar manner, Figure 5.5-11 presents some property data and temperature limit estimates for cryogenic tank insulations. The polyurethane foam currently considered in the hydrogen tank is the freon blown form with low density. However, the maximum reuse temperature for this material is approximately 180°F. A consideration to switch to the CO_2 blown foam in order to increase the temperature capability to approximatley 300°F would be compatible with the Epoxy EC2216 adhesive. If these changes are made, it is recognized that the tank gauges on the hydrogen cryogenic tank must be re-examined to withstand a 300°F limit rather than the baseline 200°F limit, and the TG 15000 insulation blanket reuqirements may be reduced to accommodate this larger design temperature rise.

CRYOGENIC TANK INSULATION MATERIALS

PROPERTY	MATERIAL				
	POLYURETHANE		POLYVINYL CHLORIDE	ISOCYANURATE	POLYIMIDE**
	FREON BLOWN	CO_2 BLOWN			
DENSITY (PCF)	2.0	4–6	2–6	2.0	2–11
TEMPERATURE CAPABILITY*(°F)					
MAXIMUM	160–180	350–400	350–400	350–400	500–600
MINIMUM					
EFFECTIVE "K" (BTU-IN./HR-FT^2 °F)	.08 @ –300°F	.08 @ –300°F	.08 @ –300°F	.08 @ –300°F	.08 @ –300°F
CRYOGEN COMPATIBILITY					
LOX	NO	NO	YES	N.A.	YES
LH_2	YES	YES	YES	YES	YES
CELL STRUCTURE	CLOSED	CLOSED	CLOSED	CLOSED	CLOSED

*100 FLIGHTS 3 MIN @ PEAK TEMPERATURE

Figure 5.5–11

5.6 Metallic Vs. Non-Metallic TPS Comparisons - The results of a trade study are presented to illustrate the unit weight requirements for various metallic and nonmetallic TPS concepts. Figure 5.6-1 illustrates one example of this weight comparison between metallic Rene' 41 and columbium and the non-metallic silica HCF. The comparison is made at arbitrarily selected temperatures of 1600°F and 2200°F. These peak temperatures that occur during entry are combined with the maximum surface pressures during ascent. The particular surface pressures selected are the most severe encountered on the fuselage. For this selected combination of conditions, the unit weights between the metallic and non-metallic concepts are very similar. The Rene' shingle concept at 1600°F has approximately a 10% weight advantage over the silica. However, this weight advantage virtually disappears at 2200°F for the comparison between columbium and, the silica HCF material.

The insulation weights in this comparison are actually sized by the trajectory heating duration and the peak temperature on the hot side of the insulation. The insulation behind the metallic shingle is considerably heavier than that behind the non-metallic honeycomb sandwich because the outer surface of HCF also serves as an insulation blanket limiting the HCF adhesive bondline to 500°F. The metallic shingles are actually sized by room temperature strength properties and the ascent pressures.

To get a true picture of unit weight comparisons for different TPS concepts, the maximum temperatures and maximum pressures must be correctly combined as illustrated in the next Figure, 5.6-2. In this figure, a side by side comparison is made for a metallic shingle concept versus the non-metallic HCF mateial for the bottom centerline, the chine line, and the lower sides of the fuselage. The metallic chine line is made of TD nickel chrome or columbium (both have very similar weights). The bottom center region of the fuselage is protected with Rene '41, as are the sides. Silica HCF bonded to the honeycomb sandwich panels is used in the non-metallic example. This comparison demonstrates that the metallic chine is lighter than HCF aft of 45% of fuselage length, and Rene '41 shingles are lighter aft of 20% on the fuselage bottoms and sides. The next several figures present a detailed breakdown of the weights that make up the total of the previous figure. Figure 5.6-3 shows the comparison of the fibrous insulation blanket behind the non-metallic and metallic panels as a function of fuselage length. Figure 5.6-4 makes a comparison of the standoff support lengths, channels and lateral beams that make up the structural support weight. The last figure 5.6-5 is a comparison of just the shingle versus the HCF and honeycomb panel.

REUSABLE TPS MATERIALS: COMPARATIVE UNIT WEIGHTS

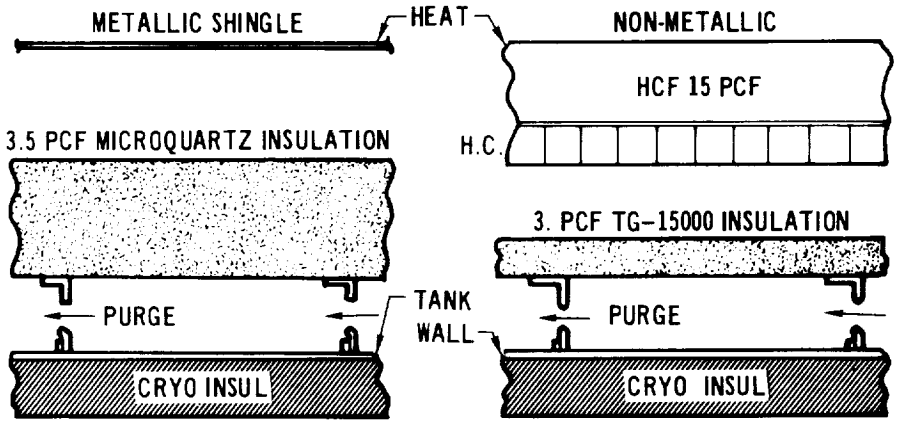

HEATED SURFACE MATERIAL	RENE	COLUMBIUM	SILICA-HCF	SILICA HCF
* MAXIMUM SURFACE TEMP (ENTRY)	1600°F	2200°F	1600°F	2200°F
MAXIMUM SURFACE PRESSURE (ASCENT)	8.4 PSI	8.4 PSI	8.4 PSI	8.4 PSI
UNIT WEIGHTS				
SHINGLE	0.82	1.36	–	–
HARDENED INSULATION	–	–	1.06	1.60
SUPPORT STRUCTURE (STANDOFF LINKS AND PANEL SUPPORT)	0.80	0.76	1.20	1.20
INSULATION BLANKET	0.57	1.14	0.22	0.50
TOTAL (PSF)	2.19	3.26	2.48	3.30

COMPARATIVE UNIT WEIGHT DISTRIBUTIONS OF METALLIC VS NON-METALLIC THERMAL PROTECTION SYSTEMS

Figure 5.6-1

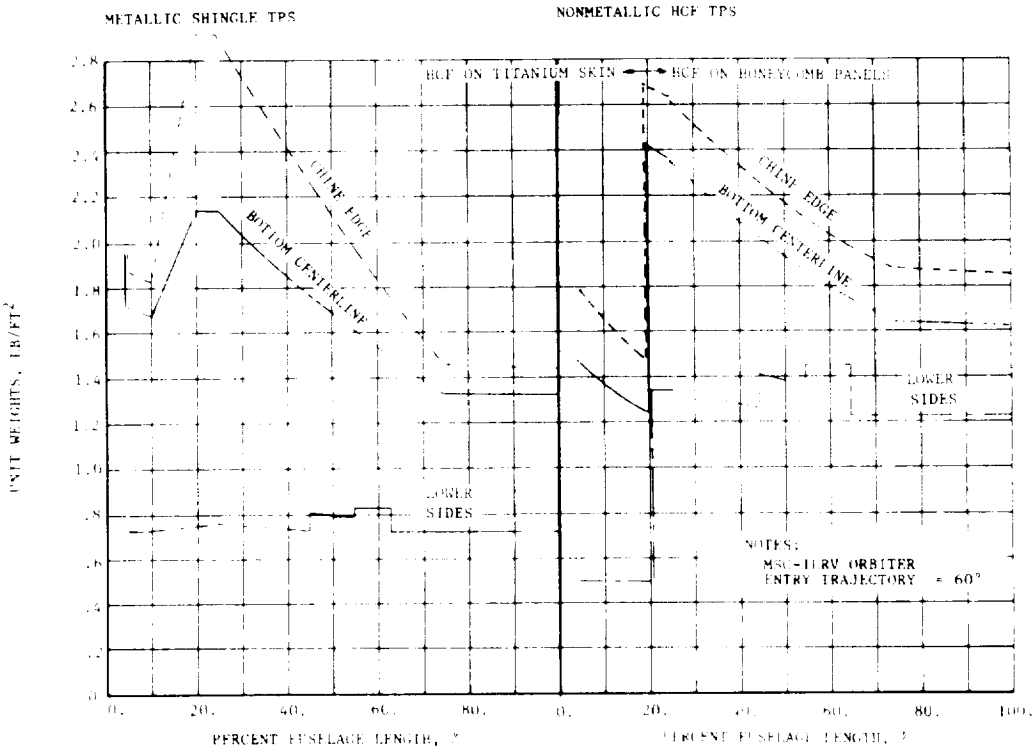

Figure 5.6-2

BREAKDOWN OF METALLIC VS. NON-METALLIC UNIT WEIGHT COMPARISON:
FIBROUS INTERNAL INSULATION BLANKET

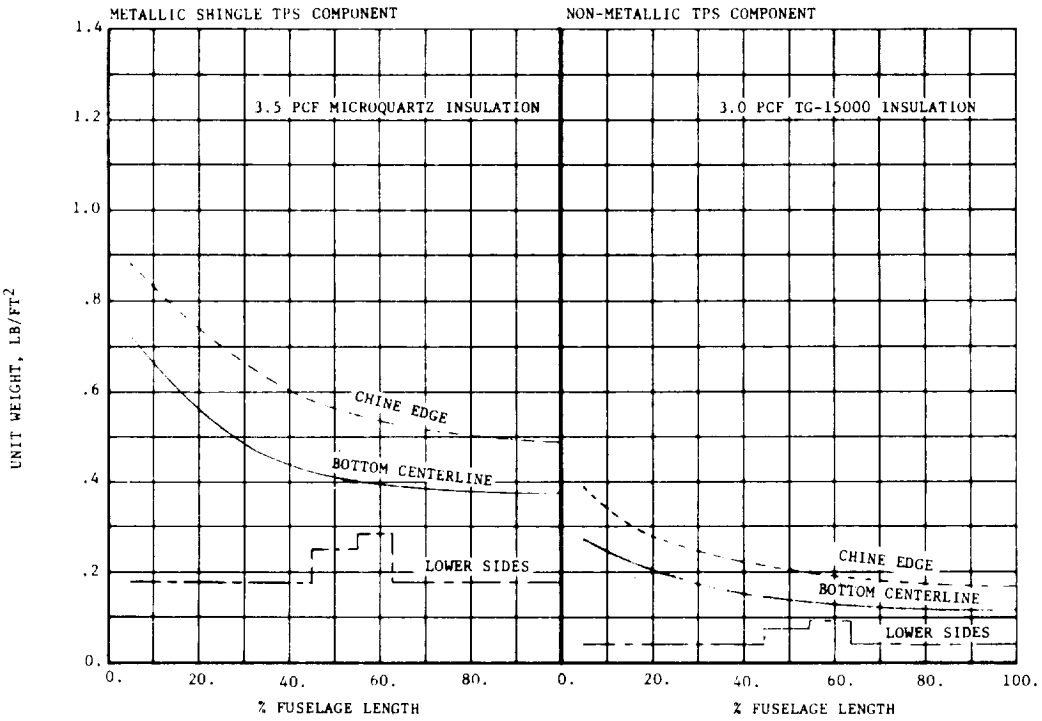

Figure 5.6-3

BREAKDOWN OF METALLIC VS. NON-METALLIC UNIT WEIGHT COMPARISON:
SUPPORT STANDOFF LINKS, CHANNELS, LATERAL BEAMS ONLY

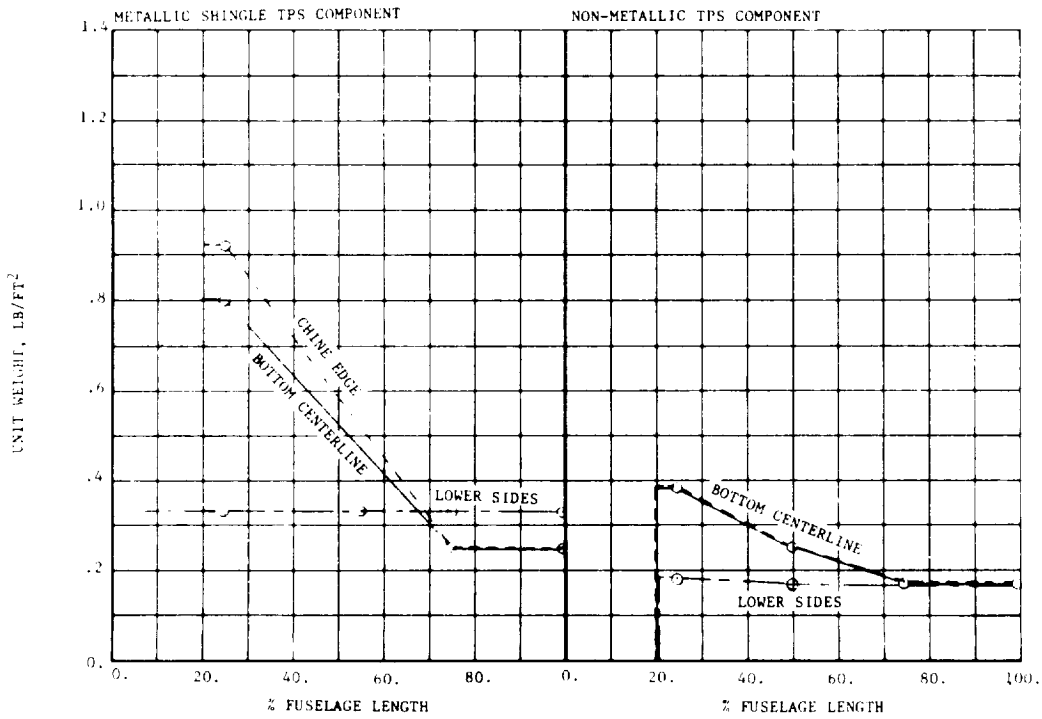

Figure 5.6-4

BREAKDOWN OF METALLIC VS. NON-METALLIC UNIT WEIGHT COMPARISON: SHINGLE VS. HCF PLUS HONEYCOMB PANEL

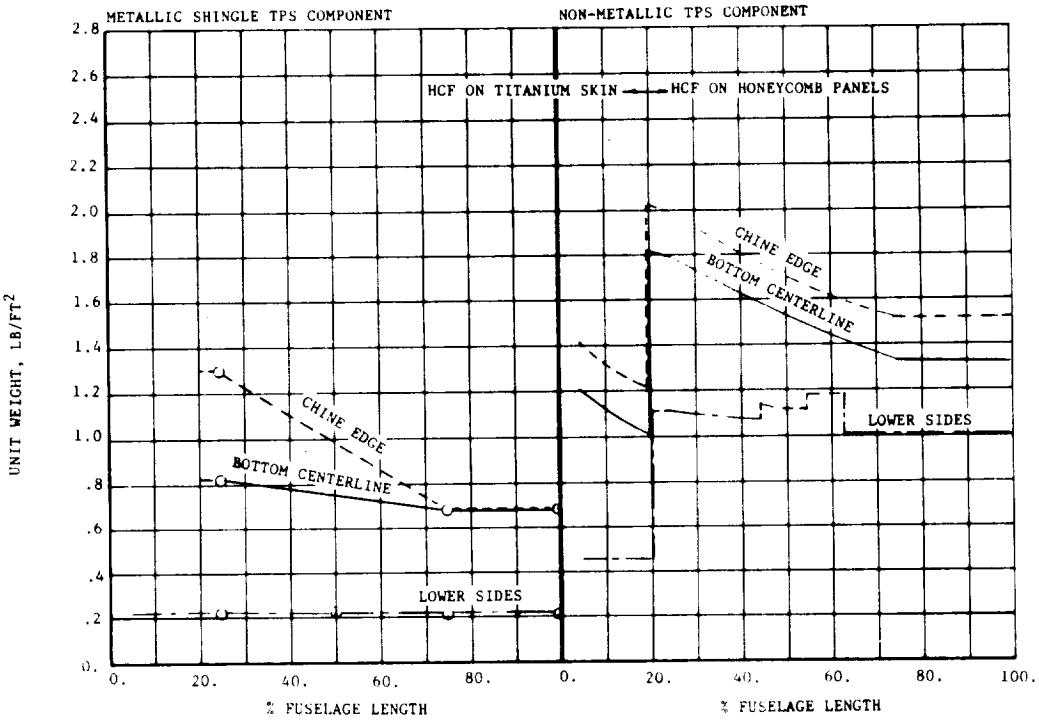

Figure 5.6-5

In all of these comparisons, it is important to remember that the final material selection between a metallic or a non-metallic TPS concept depends on numerous other factors besides weights. At this point in time, a considerable amount is known about the reuse capabilities of metallic structures. For instance Rene '41 and columbium have been used on several flight vehicles. The reuse capabilities of the HCF materials are not presently known. The HCF materials may be able to endure the environments, however at this point considerable development work is required before the HCF materials can successfully endure rain erosion, eliminate or minimize moisture absorption, and be unaffected by damage due to moisture absorption and subsequent freezing. As mentioned earlier, the acoustic or g-load limitations on the HCF materials,or the absolute limit temperature capabilities are not known when exposed to multiple cycles of the launch vibration and entry heating environment.

5.7 Thermal Protection Analysis - This section summarizes the thermal protection analysis procedures used on the fuselage and wings for the baseline trajectory (α = 60°) and several other trajectories that provide considerable cross range.

5.7.1 Thermal Model - The temperature distributions through the thermal protection system were computed using MDAC's General Heat Transfer Program. A sketch of the one dimensional thermal model is shown in Figure 5.7-1. The thermal model simulates heat transfer through the silica hardened and compacted fibrous insulation (HCF) (nodes 1 to 5), fiberglass honeycomb structural support (nodes 6 to 8), across a radiation gap to the soft internal TG 15,000 fibrous insulation (nodes 9 to 12), across a second radiation gap to the cryo-tank wall (node 13) and polyurethane foam insulation nodes (14 to 19).

TPS DETAIL – LOWER FUSELAGE

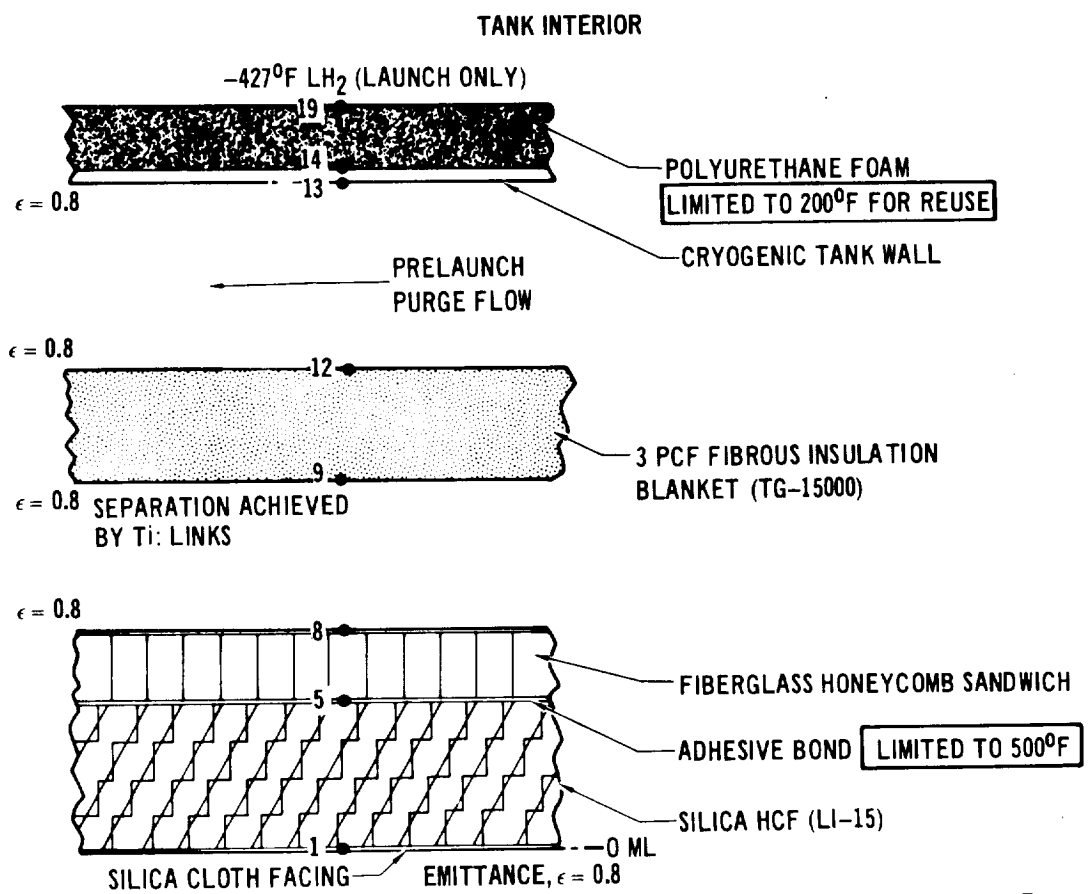

Figure 5.7-1

5.7.2 Thermal Properties - A high emittance overcoating on the silica cloth facing of the silica HCF was assumed to have a constant surface emittance, $\varepsilon = 0.8$. The silica HCF thermal conductivity is given in Figure 5.5-2, The density of HCF was 15 lbs/ft^3; its specific heat was 0.25. The fiberglass honeycomb (0.5 inch thickness, 0.015 inch faces, effective density $\rho = 11$ lb/ft^3), required as a light weight structural support for aerodynamic loads, had a specific heat of 0.25. The thermal conductivity data is given in the following tabulations:

Temp. (°F)	k_{face} (BTU/HR FT °F)	k_{core} (BTU/HR FT °F)
100	0.0575	0.044
200	0.0730	0.0535
300	0.0730	0.0535
400	0.0935	0.0775
500	0.0930	0.0950
550	0.0885	0.1055

The thermal conductivity of the TG-15000 fibrous insulation is given in Figure 5.5-9. The density of TG-15000 was 3 lb/ft^3; its specific heat ranged from 0.065 at - 320°F to 0.235 at 900. The emissivities of all surfaces of the radiation gaps were $\varepsilon = 0.8$.

5.7.3 Thermal Sizing Assumptions - The bondline was limited to a temperature of 500°F that was required to guarantee bondline integrity for multiple orbiter reusability. A tank wall temperature limit of 200°F was necessary to avoid polyurethane tank insulation material and tank wall adhesive degradation.

5.7.4 Cross Range Trajectory Heating Rates - The reference reentry heating rates used for analysis of TPS requirements were furnished by the Aerodynamic and Entry Section, Flight Technology Branch, NASA-Manned Spacecraft Center as given in Reference 5-1. These reentry heating histories, shown in Figure 5.7-2,are applicable to the stagnation point of a one foot sphere and were calculated using Detra, Kemp and Riddell Theory, (Reference 5-2). The assumed reentry trajectory was for a 12.5K orbiter with additional weight assumed for heat protection as a function of trim angle of attack. The initial conditions and vehicle characteristics include:

- Entry Altitude = 400,000 ft.
- Entry Relative Velocity = 24,395 ft/sec
- Entry Angle = 1.592°
- Area = 920 ft^2
- Area loading (w/s) = 30 lb/ft^2

HEATING RATE HISTORIES FOR CROSS RANGE FLIGHTS

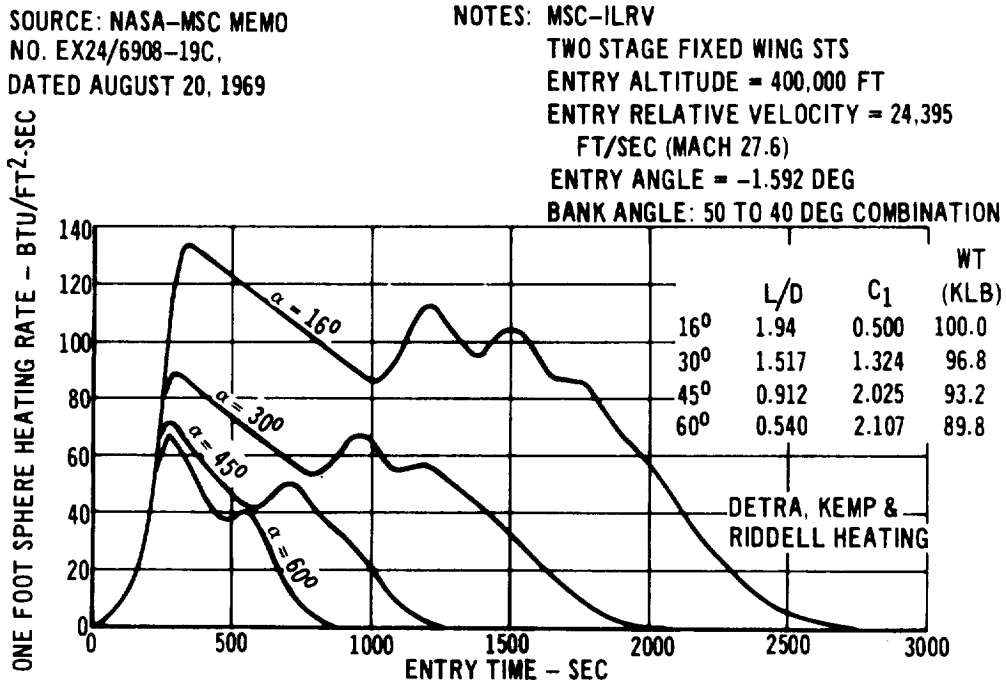

Figure 5.7-2

The area loading was maintained approximately constant (30 lb/ft^2) when larger orbiter designs were studied. These trajectories are considered thermally representative for all the vehicle sizes examined in this study. Heating pulse histories were supplied for 16°, 30°, 45° and 60° angle of attack entry trajectories. To obtain a representative range of local heating rates on the fuselage and wing, the reference one-foot sphere heating rates were reduced by constant multiplying factors of 27.9%, 18.6%, 9.3%, and 4.7%. These were then applied to the thermal model to determine the HCF thicknesses required to maintain the maximum HCF/honeycomb bondline temperature below 500°F. This analysis gave a four point range of local heating rates suitable for extrapolating or interpolating when considering distribution of the HCF material over the orbiter spacecraft. For each trim angle of attack, a heating pulse of similar curve shape characteristics but differing in amplitude was thus applied to the thermal models. Thermal models with four HCF thicknesses were used. Thus, a matrix of 64 computer cases were required for the four trajectory heating rate curves, four HCF thicknesses and four local heating rate multiplying factors. For each trajectory plots of maximum bondline temperature as a function of HCF thickness were obtained. An example is shown in Figure 5.7-3. Note that increasing the maximum bondline temperature limit reduces HCF requirements.

RAISING THE BONDLINE TEMPERATURE LIMIT REDUCES THE FUSELAGE EXTERNAL INSULATION REQUIREMENTS

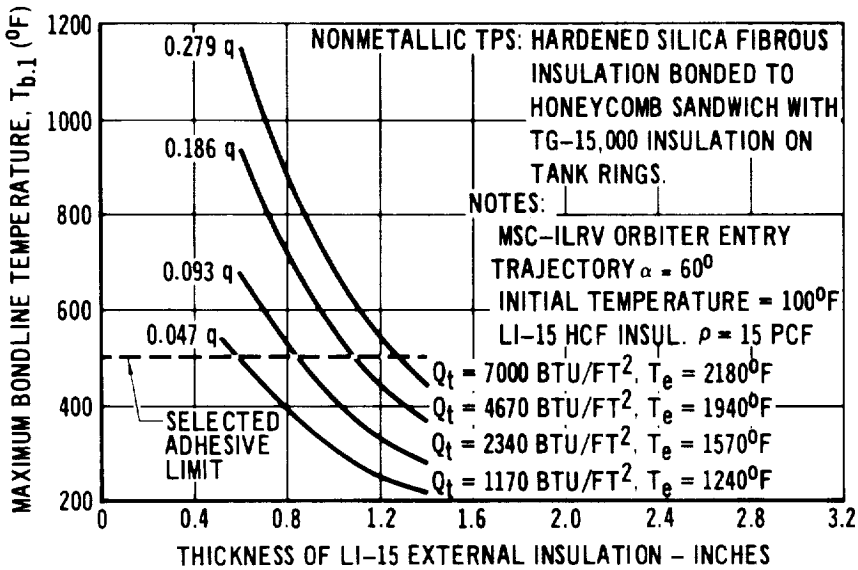

q = REFERENCE NASA-MSC HEATING RATE FOR 1 FT SPHERE

Figure 5.7-3

For the selected bondline temperature of 500°F, Figure 5.7-4 gives weight per unit area in lb/ft^2, vs the maximum local heating rate or corresponding maximum radiation equilibrium temperature as a function of cross range distance. The TPS unit weight distribution as a function of vehicle dimension are determined by converting the predicted temperatures into unit weights, using Figure 5.7-5 for the baseline configuration, or Figure 5.7-4 for cross range trajectories.

ORBITER FUSELAGE HCF UNIT WEIGHT VS RANGE

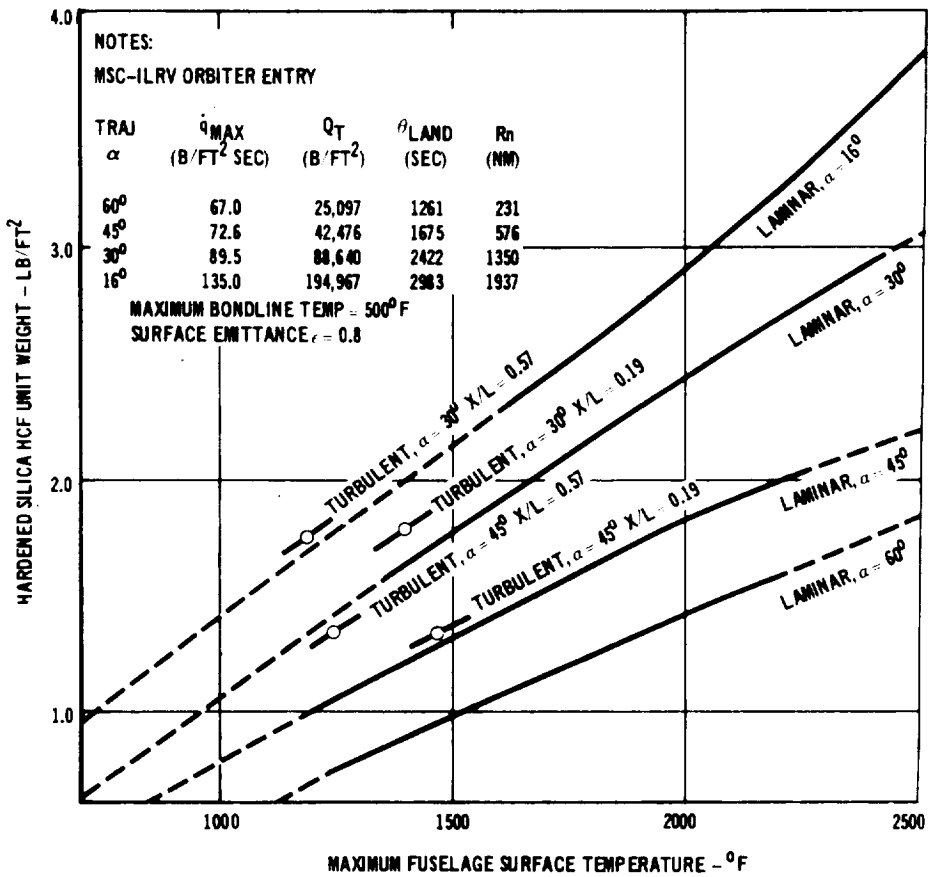

Figure 5.7–4

ORBITER FUSELAGE TPS WEIGHT DESIGN CURVES

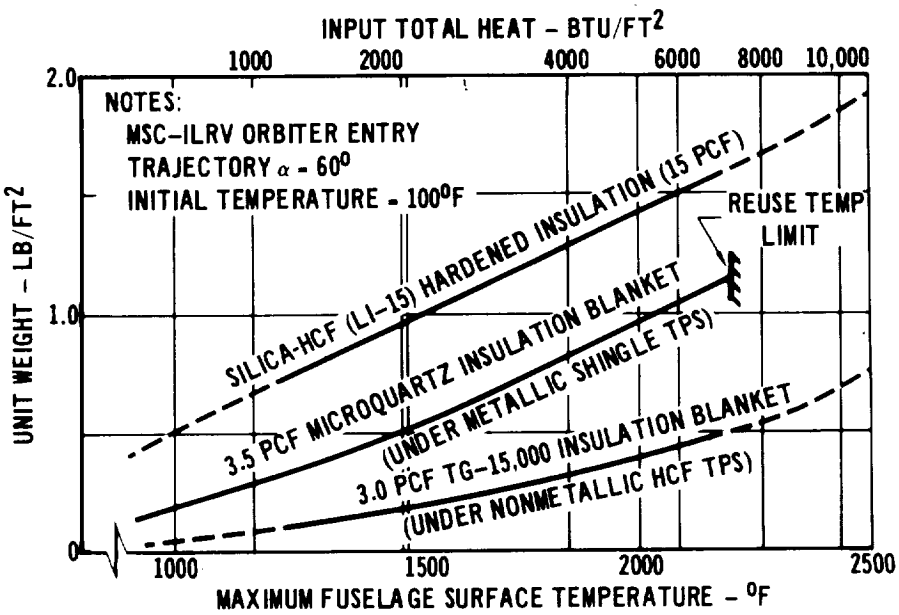

Figure 5.7–5

5.7.5 Fuselage Heating Distributions:

Laminar - For the fuselage bottom surface, the maximum laminar temperature for cross range trajectories, $\alpha = 45°$ and $\alpha = 30°$, were estimated by extrapolating the faired 60° angle of attack data from NASA-MSC tests conducted at NASA-LRC, given in Figure 5.3-7.

For the fuselage sides, the maximum laminar temperatures for cross range trajectories, $\alpha = 45°$ and $\alpha = 30°$, were also extrapolated from the 60° angle of attack phase-change paint data conducted at NASA-LRC. However, this data was adjusted with FDL-7MC data (Reference 5-3) and, also with a factor for increase in wetted length.

The maximum laminar temperatures, along with unit weight vs. surface temperature data, determined the required unit weights. The required HCF unit weight distribution for the fuselage sides is given in Figure 5.7-6 for the design trajectory. A factor of 2 was used for interference regions near the wing.

ORBITER FUSELAGE SIDE TPS UNIT WEIGHTS

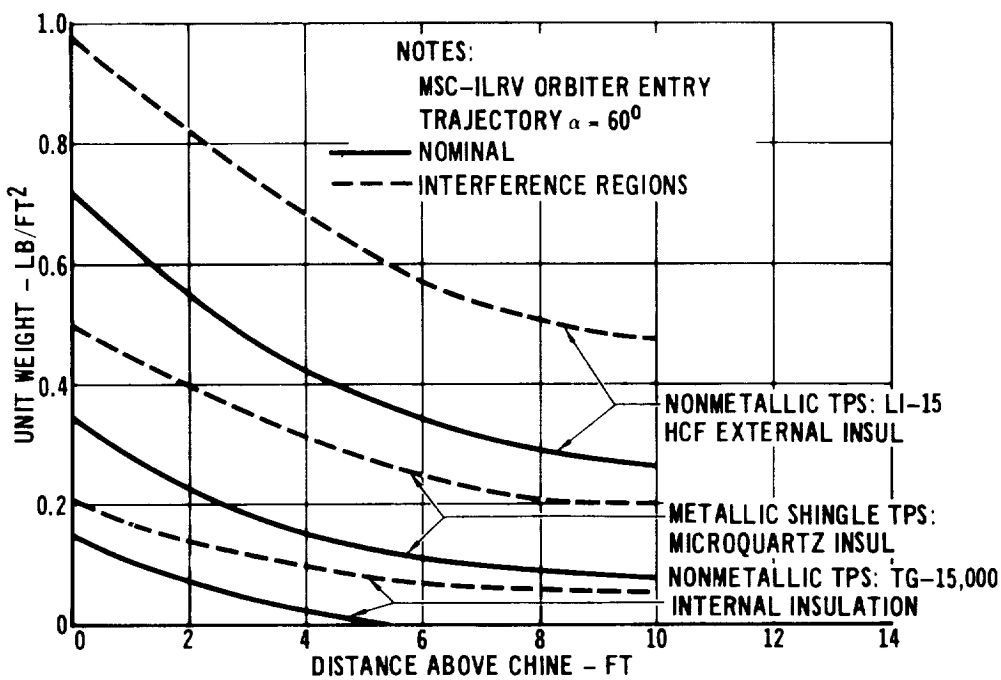

Figure 5.7-6

Turbulent - Valid prediction of the onset of boundary layer transition to turbulence is necessary for the prediction of accurate design heating rates. A convincing,comprehensive explanation of the nature of the mechanism behind the transition from laminar to turbulent flow is still lacking despite the study of a great mass of data. Correlations of wind tunnel and flight test data support the conclusion that the ($Re\theta/M_L$) parameter that is associated with the onset of transition, increases with angle of attack. This boundary layer transition criterion for laminar to turbulent flow, shown in Figure 5.3-8, was presumed for this analysis. Thus, the 60° angle of attack heating is based on laminar flow. Boundary layer transition is herein predicted when the Re_θ/M_L parameter reaches about 225 for 30° trajectory and 340 for the 45° trajectory. Boundary layer transition is assumed progressive; fully developed turbulent flow is assumed to exist at a vehicle station that is twice that of transition onset. Three curves were used to generate laminar-transition-fully turbulent heating rate histories for the 45° and 30° angle of attack trajectories at two body stations on the fuselage bottom centerline. These were (a) the transition altitude and altitude at which flow becomes fully turbulent as a function of orbiter station length-X; (b) the NASA-MSC trajectories plotted in terms of altitude vs. velocity, and (c) a cross plot of the location on the vehicle at which transition and fully developed turbulent flow occurs vs. entry time. The laminar-transition-fully turbulent heating rate histories were then applied to thermal models with four HCF thicknesses to again determine the HCF thickness required to maintain the maximum bondline temperature below 500°F.

These HCF thicknesses were then converted to unit weights and plotted vs. maximum laminar fuselage surface temperature in Figure 5.7-4. The extra laminar-transition-turbulent thermal protection requirements were normalized to the laminar peak heating rate that applies if transition did not occur. The HCF thicknesses for occurrence of turbulence were determined for a calculated turbulent heating rate history that is valid only for that particular body station. Unit weight vs vehicle station corresponding to X/L = .19 and X/L = .57, for the 45° and the 30° angle of attack trajectories were then plotted. The HCF was presumed to be distributed linearly between the X/L = .19 and X/L=.57 body station. The linear relation of HCF distribution as a function of body station was presumed to hold for extrapolation aft of the X/L = .57 station also. The fuselage surface temperatures for turbulent heating are given in Figure 5.7-7.

TURBULENT FLOW TEMPERATURE HISTORIES
FOR FUSELAGE BOTTOM SURFACE CENTERLINE

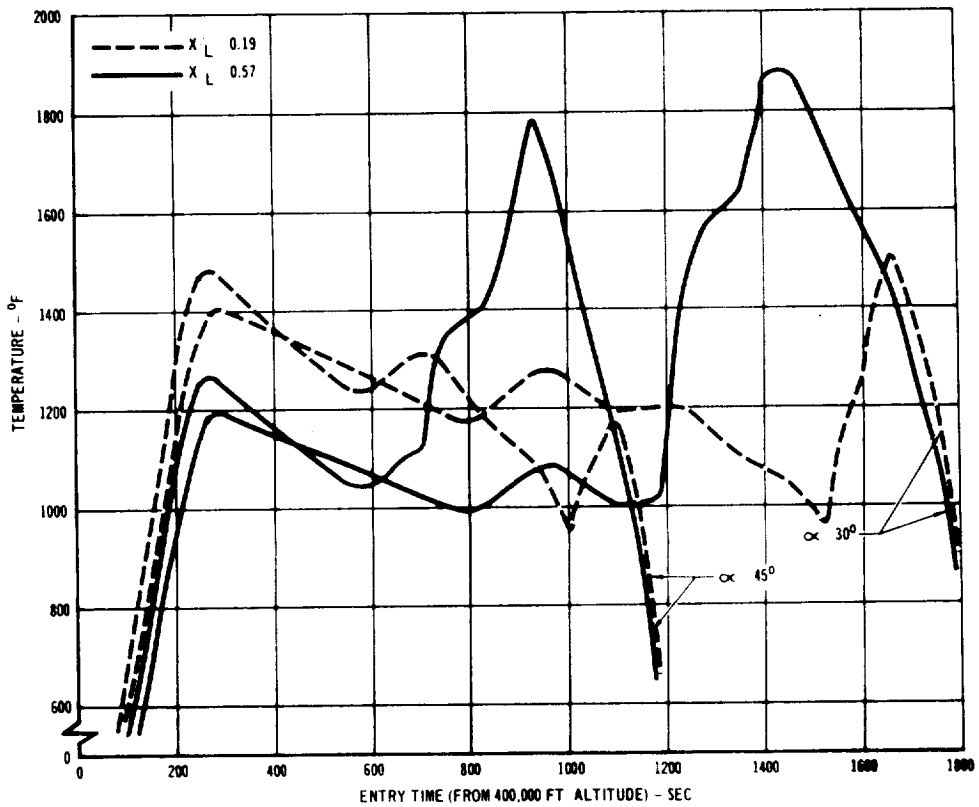

Figure 5.7-7

Fuselage Bottom Surface Chine Region Heating - The chine line heating rate multipliers of bottom surface centerline heating rates were determined on the basis of data given in Figures 6-36 and 6-37 of Reference 5-4. The maximum spanwise laminar heat transfer coefficient for swept blunt-delta data was ratioed to that at the bottom surface centerline. This gave the chine line heating rate multipliers as a function of trim angle of attack that are shown in Figure 5.7-8. Accordingly, the selected constant chine line heating factors were: 1.5 for 60° angle of attack, 2.5 for 45° angle of attack and 3.5 for 30° angle of attack. These selected factors of fuselage bottom surface centerline heating rates were also assumed to apply for turbulent heating.

Soft Fibrous Internal Insulation Sizing - After the hardened silica external insulation was sized to maintain the bondline below 500°, the fibrous TG-15000 insulation, which is bagged and attached to the ring frames on the outside of the LH_2 and LOX tank walls, was sized to maintain the tank wall below 200°F. This was accomplished by a procedure similar to external HCF insulation sizing. Heating rates were applied to thermal models with correctly sized HCF thickness but varying insulation thicknesses.

The intersection of maximum temperature vs. thickness data with the 200°F tank wall temperature limit line was determined. Converting intersection thicknesses into equivalent unit weights (multiplying by insulation density) gives the resulting weight per unit area vs the maximum local external surface equilibrium temperature given in Figure 5.7-9.

If the tank wall temperature limit was raised, then the TG-15000 insulator requirements would be reduced. Soft insulation blanket is not required for a tank wall temperature limit of 300°F, as shown in Figure 5.7-10.

Soft insulation for use under metallic shingles, is required to have a much higher temperature reuse limit than 900°F for the TG-15000 under HCF-honeycomb. Accordingly, 3.5 PCF Microquartz was selected; was sized using a metallic shingle thermal model; and is shown in design curves for purposes of metallic vs non-metallic TPS comparisons. This information may also be useful for regions (such as around access doors, etc.) where a metallic shingle TPS may be an attractive alternate.

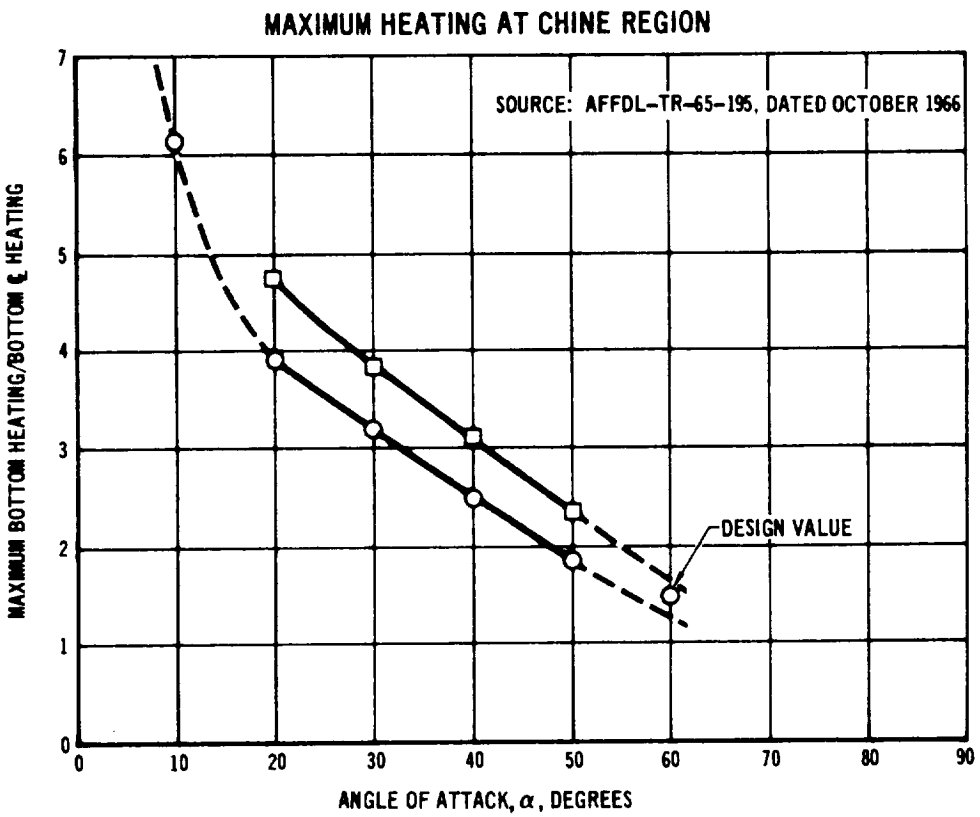

Figure 5.7-8

INTERNAL INSULATION BLANKET SIZE REQUIRED TO MAINTAIN TANK WALL TO 200°F MAXIMUM TEMPERATURE

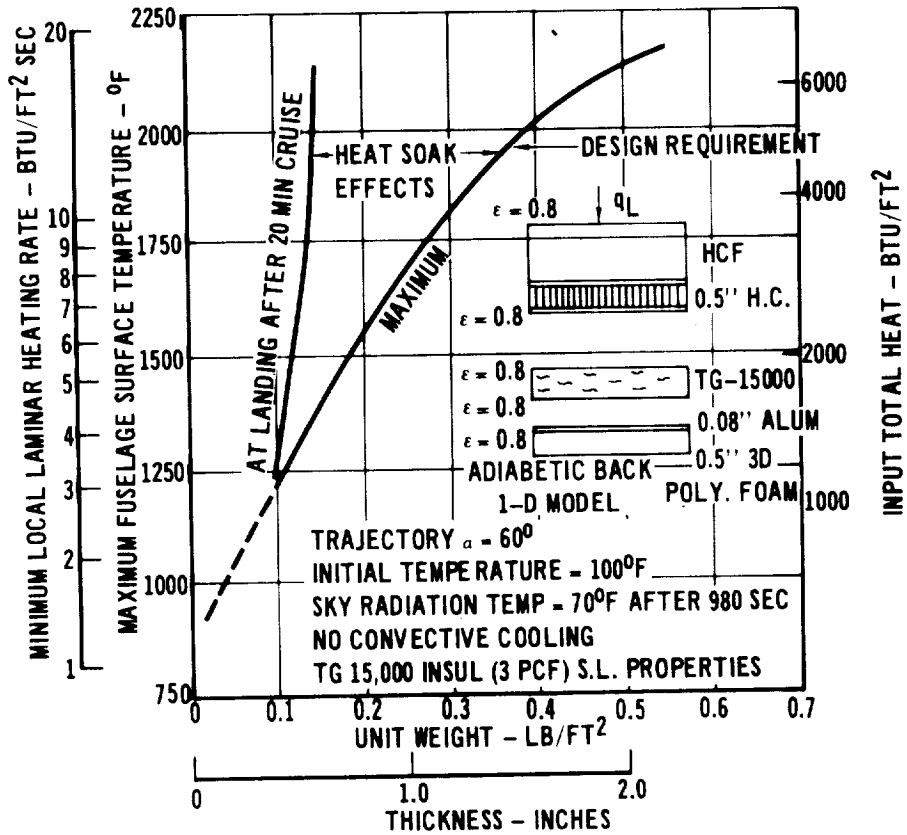

Figure 5.7-9

RAISING THE MAXIMUM TANK WALL TEMPERATURE REDUCES INSULATION

(ORBITER FUSELAGE, α = 60° ENTRY)

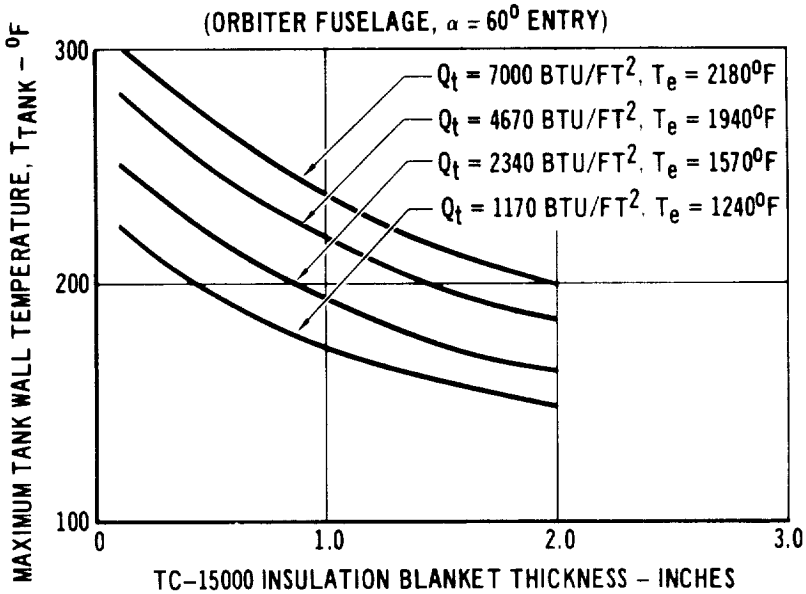

Figure 5.7-10

5.7.6 Wing Heating Distributions - The chordwise local wing heating distributions in undisturbed regions are presented in Figures 5.3-2 through 5.3.5 for 60°, 45°, 30°, and 15° angles of attack. All of these heating rates are referenced to Figure 5.7-2. Laminar heating was assumed. The spanwise variation in the local wing heating distribution was determined by multiplying these local heating rates with the square root of the ratio of 150 inch chord (upon which the wing heating tests were scaled) divided by the actual design chord length, as a correction factor.

The heating rates were modified in fuselage-wing shock interaction heating regions on the bottom of the wing according to the data given in Figure 5.3-10. This figure gives the chordwise increase in interference heating rates at various angles of attack.

The high temperatures in the first 15% chord required that the wing leading edge region be protected by a replaceable slipper made of pyrolized carbon laminate (carbon-carbon). At high angle of attack, the lower surface of the wing required hardened silica HCF bonded to titanium wing structure as thermal protection. The maximum bondline temperature was considered to be 500°F; this temperature limit is the same as the fuselage. At low angles of attack (below 30°), resulting higher temperatures require that hardened silica HCF must be bonded to both sides of the wing aft of the carbon-carbon slipper.

The horizontal stabilizer heating rates were estimated to be about the same as the local fixed wing heating rates when the chord lengths were similar.

The hardened silica HCF unit weights, which are distributed as a function of the equilibrium temperature on the wing, were determined from the design curve on Figure 5.7-4.

Cross Range TPS Unit Weights - In considering the entry of a fixed wing vehicle from orbit at various angles of attack to provide cross range recall the advantages of the high angle of attack, which minimized the likelihood of turbulence and minimized the heating time. At lower angles of attack, the reference heating rates, the heating time, and total heat increase. Thus, more and more of the vehicle is exposed to the severe environment of entry; more of the fuselage becomes exposed to turbulent heating rather than laminar heating; and the TPS system eventually covers the entire vehicle rather than only the lower half. Figure 5.7-11 compares the summary results of cross range analyses with the base line 60° angle of attack trajectory. The span of cross range is from 231 n.m. to 1560 n.m. Four

locations on the fuselage were examined: at 10%, 25%, 50% and aft of 75% of the fuselage length. For each trajectory, four fuselage areas were examined: the bottom of the fuselage, the corner or chine edge, the lower side, and the top region of the fuselage. In this chart, the total weight of the TPS components are shown: HCF insulation, TG15000 insulation, the structural support for honeycomb, adhesive, and standoff links. Data similar to the above Figure are presented for the wing in Figure 5.7-12. At low angles of atack, the entire wing must be protected with HCF bonded to the titanium skin. The results indicate that the thermal protection system weight grows rapidly as the crossrange requirements increases. The total vehicle TPS weights for α = 20° and 60° are shown in Figure 5.7-13.

THERMAL PROTECTION UNIT WEIGHT VS CROSS RANGE

CROSS RANGE	1560 N M				230 N M			
ANGLE OF ATTACK	20°				60°			
TOTAL HEAT	155,000 BTU/SQ FT				25,100 BTU/SQ FT			
MAXIMUM HEAT RATE	116 BTU/SQ FT-SEC				67 BTU/SQ FT-SEC			
W/S	50 LB/SQ FT				30 LB/SQ FT			
% FUSELAGE	UNIT WEIGHT, LB/SQ FT							
LENGTH	Ⓐ	Ⓑ	Ⓒ	Ⓓ	Ⓐ	Ⓑ	Ⓒ	Ⓓ
10	2.80	3.96	1.88	1.88	1.39	1.70	.51	.29
25	3.77	5.88	2.80	1.96	2.39	2.65	1.35	.27
50	3.44	4.44	2.85*	2.12	1.94	2.20	1.38	.0
75 – 100.	3.34	4.09	3.18	2.45	1.66	1.89	1.24	.0

*NO INTERFERENCE HEATING, WING FOLDED

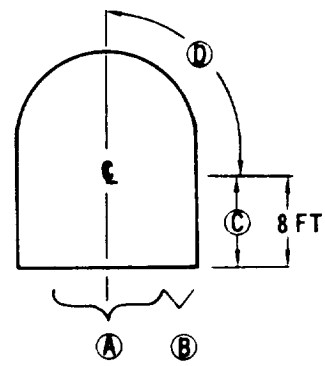

- HCF (OVER 800°F), BONDED TO HONEYCOMB SANDWICH, TG-15000 INSULATION, STRUCTURAL SUPPORTS
- TITANIUM SKIN (UNDER 800°F) NOT IN TPS WT, INSULATION, SUPPORTS
- HCF - 15 PCF, ϵ = 0.8

TPS ΔW - 18,400 LBS

Figure 5.7-11

WING THERMAL PROTECTION UNIT WEIGHT VS. CROSS RANGE

Cross Range Angle of Attack		1500 Nautical Miles 20°				230 Nautical Miles 60°			
Interference Heating Zones Exposed Wing Span		0 to 10%; 25 to 60% 0%	25%	50%	100%	0 to 35% 0	25%	50%	100%
Percent Chord									
		Unit Weight, psf				Unit Weight, psf			
Bottom	20%	2.71	2.86	2.9	2.69			1.52	1.7
	30%	2.46	2.54	2.62	2.36	1.62	1.67	1.43	1.58
	50%	2.40	2.49	2.55	2.30	1.29	1.33	1.23	1.38
	100%	2.12	2.17	2.24	2.30	.83	.85	.85	.97
Top	15%	1.71	1.74	1.82	1.99				
	20%	1.63	1.71	1.74	1.90	Bare Titanium Skin			
	50%	1.56	1.60	1.66	1.82				
	100%	1.66	1.69	1.76	1.92				

Figure 5.7-12

CROSS RANGE CAPABILITY REQUIRES MORE TPS WEIGHT

TPS LOCATION	CROSS RANGE AND ENTRY ANGLE OF ATTACK	
	1560 N.M. 20°	230 N.M. 60°
	(LBS)	(LBS)
Fuselage		
Bottom	10,832.	6,604.
Sides (2)	6,062.	3,073.
Top	13,420.	4,080.
Wings		
Bottom	1,426.	1,600.
Leading Edge	380. (b)	380.
Top	972.	0.
TOTAL TPS WEIGHT (a)	33,092. LBS.	15,737. LBS.

(a) Does not include: Orbiter base heating TPS (339 lbs), cryo-tank insul. (1822 lb), horiz. tail stab. TPS (660 ft^2)
(b) Good for one flight only (α = 20°).

Figure 5.7-13

5.8 Space Shuttle TPS Problems - A summary for the thermal protection system should include discussion of the problems that are commom to reusable TPS for any space shuttle configuration. However, the solution and extent of these problems is related to the vehicle shape. Figure 5.8-1 will help to discuss these problems that may be grouped into four categories: heating rate predictions, materials, TPS design, and cost uncertainties.

For any vehicle shape, and certainly for the stacked configurations, there is a need for considerable heating distribution testing: 1) to resolve uncertainties in the flow interference regions, and 2) to define whether the flow is laminar or turbulent during entry. The change in thermal properties exposed to multiple cycles of mission environments is a major unknown. These environments include: launch acoustics and vibrations, entry heating, landing shock, rain erosion, moisture absorption and internal frost damage.

In the design area,there are numerous types of joints between panels, and it is important to minimize the leakage flow of the hot gases in the boundary layer from entering the regions behind the external TPS shingles. Structural heat shorts between the exterior and the cryogenic tanks is a major concern because the maximum temperatures of the aluminum tanks are currently restricted to 200°F.

In the last area, there is considerable uncertainty in estimating the cost. Methods of estimating the manufacturing, tooling, material, and engineering costs are better known than how to define the inspection and refurbishment costs. These costs are closely tied to the verification criteria that are selected for TPS reuse certification. The verification criteria and TPS certification procedures will also influence the turnaround time between flights.

The most reliable method to solve the TPS uncertainties and problem areas is to perform detailed analysis, tests, and design trade-offs on specific point designs.

SPACE SHUTTLE TPS PROBLEMS

1. HEATING RATE PREDICTIONS
   - DISTRIBUTIONS OVER BODY AND FLOW TRANSITION
   - BASE HEATING
   - SHOCK & FLOW INTERFERENCE, PROTUBERENCES, HOLES (RCS)
   - DESIGN FACTORS (ALLOWABLE MATERIAL TEMP, INITIAL ENTRY CONDITIONS)
2. MATERIALS
   - THERMAL CONDUCTIVITY OF NEW MATERIALS HCF, CARBON CARBON, ETC
   - PERFORMANCE CHANGES WITH REUSE – CONDUCTIVITY, EMITTANCE COATING, INHIBITED CARBON OXIDATION
3. TPS DESIGN
   - PANEL JOINT DESIGN TO MINIMIZE FLOW LEAKAGE
   - LOW HEAT LEAK STRUCTURAL TIES
   - WING FIN LEADING EDGE
4. COST UNCERTAINTIES
   - INSPECTION
   - VERIFICATION CRITERIA
   - REFURBISHMENT METHODS

Figure 5.8–1

6. PROPULSION

Propulsion systems required on both the booster and orbiter to perform its ascent, maneuvering and deorbit functions are pictorially shown in Figure 6-1.

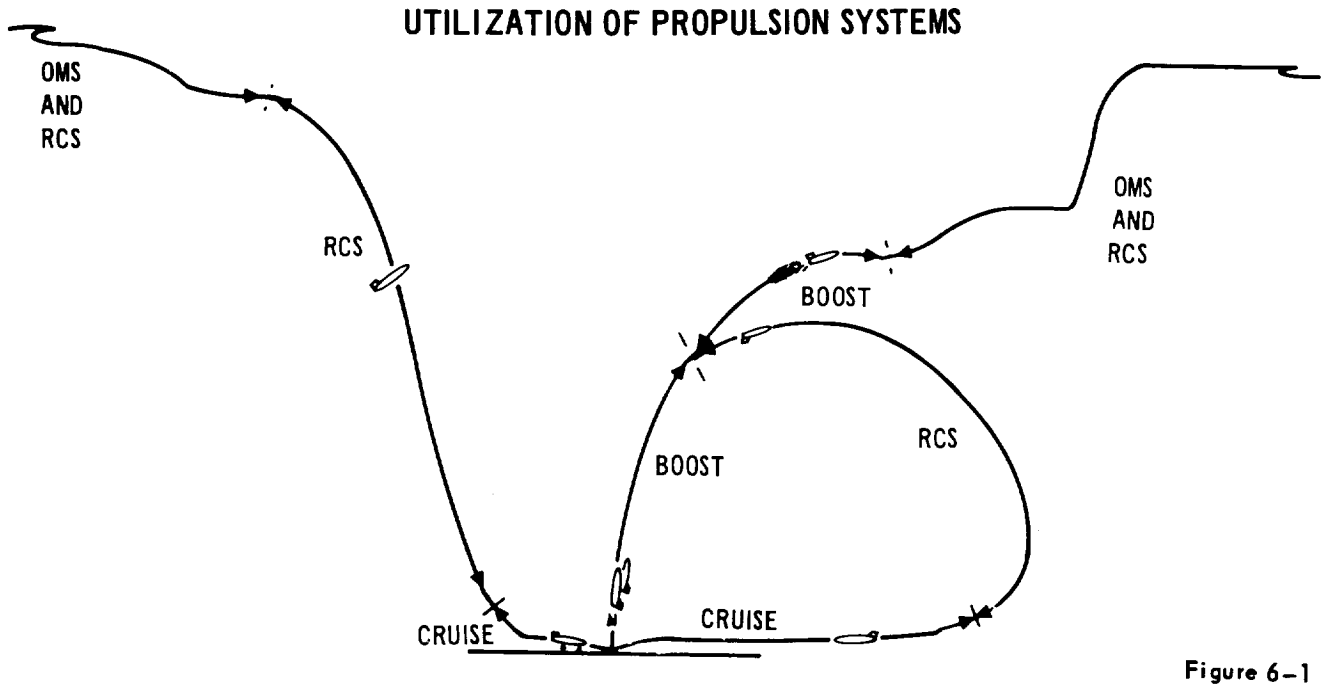

Figure 6-1

The propulsion systems are summarized as follows:

a. Booster - A boost propulsion system is used to provide the initial ascent ΔV to the mated vehicles. Ten high chamber pressure bell nozzle engines burning liquid hydrogen and liquid oxygen are used for this function. The engines are throttled as required to prevent the ascent acceleration limits from being exceeded. The engines are gimballed in order to achieve trajectory control. All engines are shut down at the completion of the booster ascent burn, and the two vehicles effect separation.

A Reaction Control System (RCS) is used to assist the separation of the booster from the orbiter and provide exoatmospheric control. The RCS provides 3 axis translation and attitude control capability by means of pressure fed gaseous oxygen/gaseous hydrogen thrusters.

A cruise propulsion system is used to enable the booster to cruise back to the launch site. Six conventional turbofan engines are used for this purpose, operating on JP fuel.

b. Orbiter - A boost propulsion system is used to provide the final ascent ΔV to the orbiter. Two high chamber pressure bell nozzle engines (using the same turbo-machinery, etc. as the booster engines) are used for this function. The two engines are ignited a few seconds following separation and are shut down at the completion of the boost phase. Both engines are throttled and gimballed as required to limit acceleration levels and to provide trajectory control respectively.

An Orbit Maneuvering System (OMS) is used for significant orbiter forward translational changes. Typically such changes are associated with orbit circularization, phasing, Hohmann transfer, gross docking, and deorbiting. The OMS uses the two boost engines, operating in a pressure fed mode from separate propellant tankage.

A Reaction Control System (RCS) is used to provide 3 axis transaction and attitude control and is similar to the booster RCS. The RCS is specifically used for final rendezvous and docking, on-orbit attitude control, small maneuvers and entry attitude control.

A cruise propulsion system is used to provide landing assist and go around capability for the orbiter. Four conventional turbofan engines are used for this purpose, operating on JP fuel.

6.1 Boost Engine Analysis

6.1.1 Sizing - The boost engines were sized with the following considerations in mind:

a. Off the pad thrust-to-weight (T/W) ratio. The flight performance data presented in Section 8.1, Figure 8.1-3 shows how the initial T/W affects the ΔV losses during boost.

b. Engine Out - As noted in Figure 6.1-1, it is desirable to have an emergency overthrust capability so that if one engine cannot be used during boost, the remaining engines can be operated in an overthrust mode in order to maintain the nominal T/W ratio and to enable orbit to be achieved. The number of engines selected will obviously determine the degree of emergency overthrust required. From discussions with the engine manufacturer an overthrust level of about 10% is considered to be achievable.

BOOST ENGINES – OVERTHRUST CAPABILITY

• OVERTHRUST CAPABILITY DESIRABLE FOR 1 ENGINE OUT CONDITION
• ENGINE(S) TO BE ABLE TO COMPLETE ONE MISSION AT OVERTHRUST CONDITIONS.
• FOR ONE ENGINE OUT ON BOOSTER, AN OVERTHRUST OF 11% ON REMAINING ENGINES WILL ENABLE NOMINAL LAUNCH T/W TO BE RETAINED. FOR 1 ENGINE OUT ON ORBITER, AN OVERTHRUST OF 10% WILL ENABLE ORBIT TO BE ACCOMPLISHED.
• REQUIRING AN OVERTHRUST CAPABILITY OF ABOUT 10% WILL: / REQUIRE ONLY 5% INCREASE IN ENGINE SPEED FOR ONE ENGINE OUT CONDITIONS / HAVE NO IMPACT ON BOOST TANK DESIGN / ENABLE A TRUE 400K ENGINE TO BE DESIGNED

Figure 6.1-1

c. Base Area - The degree of base area contributes significantly to the overall vehicle drag during subsonic flight. The size and number of engines should be such that maximum utilization of the base area is obtained (recognizing the effects of engine gimballing).

d. Commonality - For purposes of program costs and development testing, it is desirable to have a common boost engine for both the booster and orbiter.

e. From a study of engine requirements for payloads up to 50,000 lb it was concluded that the boost engines should be sized between 400,000 lbs and 690,000 lbs S.L. thrust. In order to optimize booster engine size to payload, the 400,000 lbs thrust level was found to be appropriate for the 25,000 pound payload condition.

Recognizing the above considerations the boost engines were sized as follows:

1. Booster - Ten high chamber pressure bell nozzle type engines were chosen, each engine having a nominal S.L. thrust of 400,000 lb. A 42.5:1 fixed area ratio nozzle was selected.
2. Orbiter - Two high pressure bell nozzle type engines were chosen. These two engines are identical to those used on the booster except that a retractable 100:1 area ratio nozzle is used instead of a fixed bell. For reliability the nozzle is in the extended position

prior to lift-off and is retracted following deorbit burn to protect the bell from the entry environment. The nominal vacuum thrust of each engine is 463,000 lb.

All boost engines are gimbalable and throttleable. The nominal total ΔV for boost is 30,600 fps. The engines are designed for 100 mission life with a 10 hour life between overhaul.

Vehicle payload sensitivity to boost engine specific impulse must be determined (See Section 6.4). If an effective -3σ impulse is used to size the vehicle (instead of the nominal impulse) a penalty of 3.5 seconds is incurred on the orbiter, but only 1.6 seconds (due to the large number of engines) is incurred on the booster.

A summary of some specific boost engine characteristics is shown on Figure 6.1-2. Further analysis is required to determine what additional optimization can be obtained with respect to propellant mixture ratio and engine expansion ratio/vehicle base area effects.

BOOST ENGINE CHARACTERISTICS

	BOOSTER	ORBITER
TYPE	HIGH P_C BELL	HIGH P_C BELL
MIXTURE RATIO	6:1	6:1
AREA RATIO	42.5:1 (FIXED)	100:1 (RETRACTABLE)
WEIGHT	4150	4400
-3σ WEIGHTED IMPULSE PENALTY - SEC	1.6	3.5
NOMINAL THRUST - LB	400,000 (S.L.)	463,000 (VAC)

Figure 6.1-2

6.1.2 Bell Vs Aerospike Comparison - A cursory review of the implications of using an aerospike type boost engine was performed. The following is a summary of the review.

a. For the defined base area relevant to the bell engines, aerospike engines interchangeable with bell engines result in approximately a 10% payload decrease. Aerospike engine performance in the small diameter is significantly less than that of the bell nozzle engine.

b. If the aerospike engines are sized such that they are optimum for the orbiter (i.e., higher expansion ratio), then using the same engine for the booster would require a significantly larger base area. This, in turn, causes an increase in spacecraft weight and subsonic cruise drag.

c. Interchangabilty and optimized performance cannot be achieved between the bell and aerospike engines unless a different aft fuselage is provided for each engine type.

d. The operating pressure of the aerospike engine is not yet firmly established.

e. The more conventional bell engine design has been selected since preliminary studies indicate no advantege with the aerospike engines. More detailed analyses will be required to further evaluate the specific merits of each engine type.

6.1.3 Gimbal Limits Analysis - The boost engine gimbal angle requirements for the booster and orbiter are summarized on Figure 6.1-3. These requirements were established by considering the gimbal angle travel necessary to provide c.g. tracking, attitude control, and control to the required trajectory. In addition, gimbal angle margins due to engine out conditions were determined.

BOOST ENGINE GIMBAL REQUIREMENTS

	BOOSTER	ORBITER
PITCH	$\pm 5^0$	$\pm 5^0$
YAW	$\pm 4^0$	$\pm 1^0$
ROLL	$\pm 1^0$	$\pm 1^0$

- $\pm 7^0$ PROVIDED FOR BOOSTER AND ORBITER
- REQUIREMENTS INCLUDE CG TRACK, ENGINE OUT, AND CONTROL MARGIN
- ENGINES CANTED TO REDUCE TOTAL ANGULAR TRAVEL

Figure 6.1-3

An example of how the gimbal angle requirements were established is shown on Figure 6.1-4. This figure shows the pitch gimbal angle requirements of the booster as a function of time along the ascent trajectory. To establish the requirements, a typical load and drift relief autopilot was assumed. Gimbal angles required for nominal c.g. tracking are shown. At points along the ascent trajectory, the additional gimbal angle requirements necessary to maintain satisfactory control along the desired trajectory were determined by considering the following:

- o Steady state gimbal angle due to steady state 95 percentile winds at ETR.
- o Peak gimbal angle occuring during a 30 ft/sec. gust transient.
- o Steady state gimbal angle due to a 1.0 ft. lateral c.g. shift.

The results of these considerations provide the total gimbal envelope shown in Figure 6.1-4. As expected, the maximum gimbal angles occur near the maximum dynamic pressure region where the vehicle is most sensitive to the wind and gust disturbances. The maximum gimbal angle required is ± 4 degrees. Worse case engine out conditions add approximately ± 1 degree to the total gimbal envelope shown. Therefore, the total booster pitch requirement shown is ± 5 degrees.

TYPICAL BOOSTER ENGINE PITCH
GIMBAL REQUIREMENTS

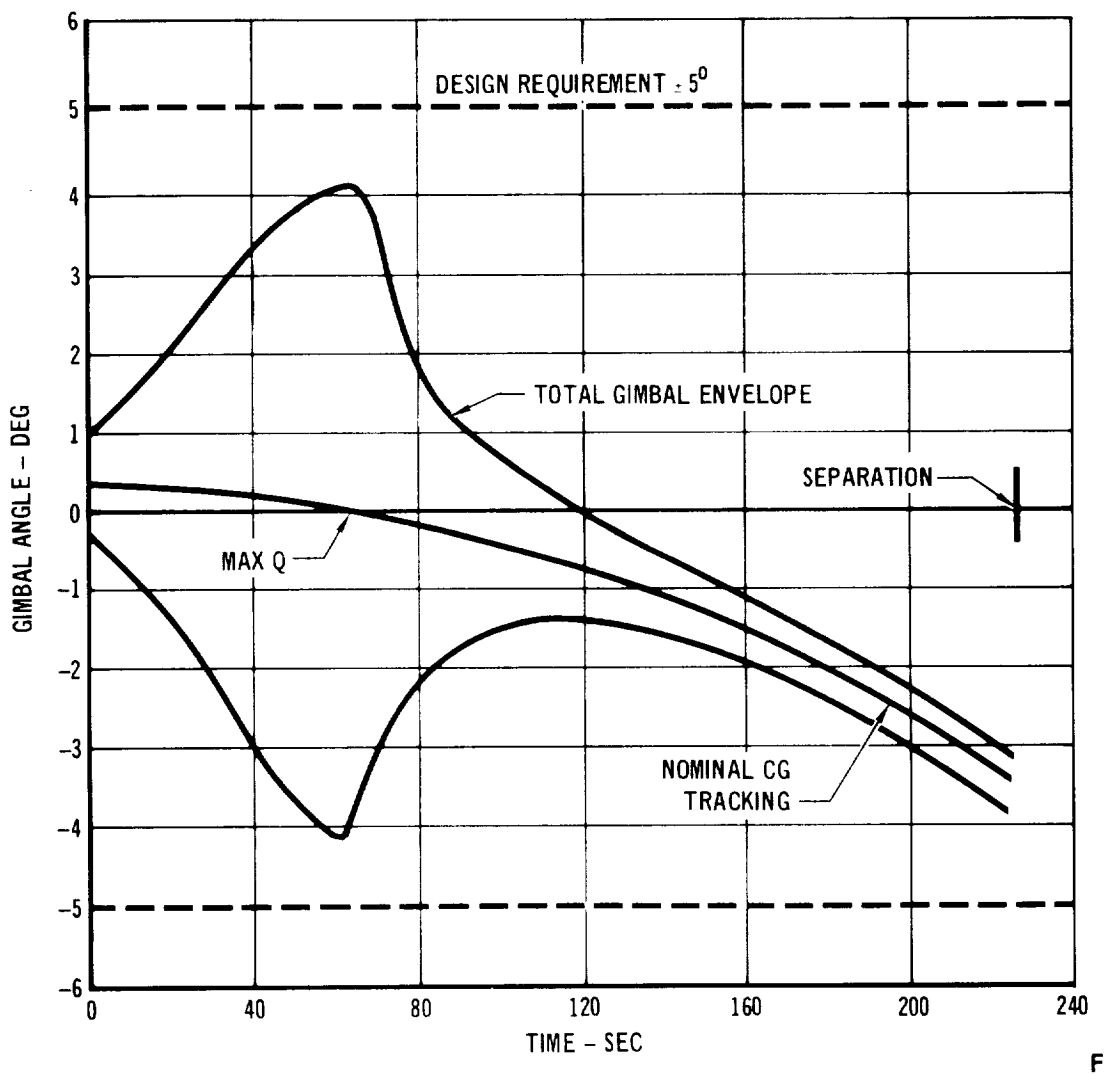

Figure 6.1-4

The booster yaw requirement (± 4°) was obtained by scaling down the pitch requirement discussed above. The yaw requirement is reduced since there is essentially no c.g. travel away from the yaw axis. Also, the sensitivity to wind and gust disturbances in yaw is much less than about the pitch axis, and the engine out condition only requires approximately ± 0.5 degree of additional gimbal. Thus, the ± 4.0 degree requirement shown on Figure 6.1-3 should be more than adequate.

The ± 1 degree requirement about the booster roll axis will provide adequate roll stabilization and roll control for programmed maneuvers. Booster engine out conditions provide no difficulties in roll since other engines can then be selected for roll control.

The orbiter gimbal requirements differ from those of the booster gimbal requirements since less control capability is required but additional gimballing is necessary to provide engine out capability. A ± 1 degree of engine gimballing about all axes will provide adequate control. However, the pitch gimbal angle must be increased to ± 5 degrees to provide engine out capability. During such engine out conditions, the RCS will be utilized for roll control.

There is also a clearance requirement with respect to the vehicle elevator and boost engines. In order to reduce the overall sizing of the engine/elevator arrangement, the boost engines are gimballed 7° in pitch to provide elevator deflection clearance for subsonic aerodynamic control.

6.1.4 Boost Engine Feed System

Booster - Figure 6.1-5 shows the boost engine feed system geometry. Five 14" dia. lines run from the oxidizer tank with each line splitting into two 10" dia. lines. The line division is positioned such that a vapor bubble generated by an engine shut down will not be ingested by another engine. Engine isolation valves are located immediately downstream of the line division. The ten resulting lines are then routed to each boost engine as shown. Diffusers are used to transition smoothly from the 10" dia. lines to the required 14" dia. engine supply. Pressure/volume compensators and gimbal bellows assemblies are used immediately upstream of the engines. The oxidizer tank incorporates anti-vortex and slosh baffles.

The hydrogen feed system is generally similar, except that due to the relative close coupling of the hydrogen tank and the engines, the hydrogen lines are initially fed from a compartmented sump. Engine shut-off valves are located at the sump outlets. The hydrogen tank also incorporates a multi-cruciform anti-

BOOST ENGINE FEED SYSTEM

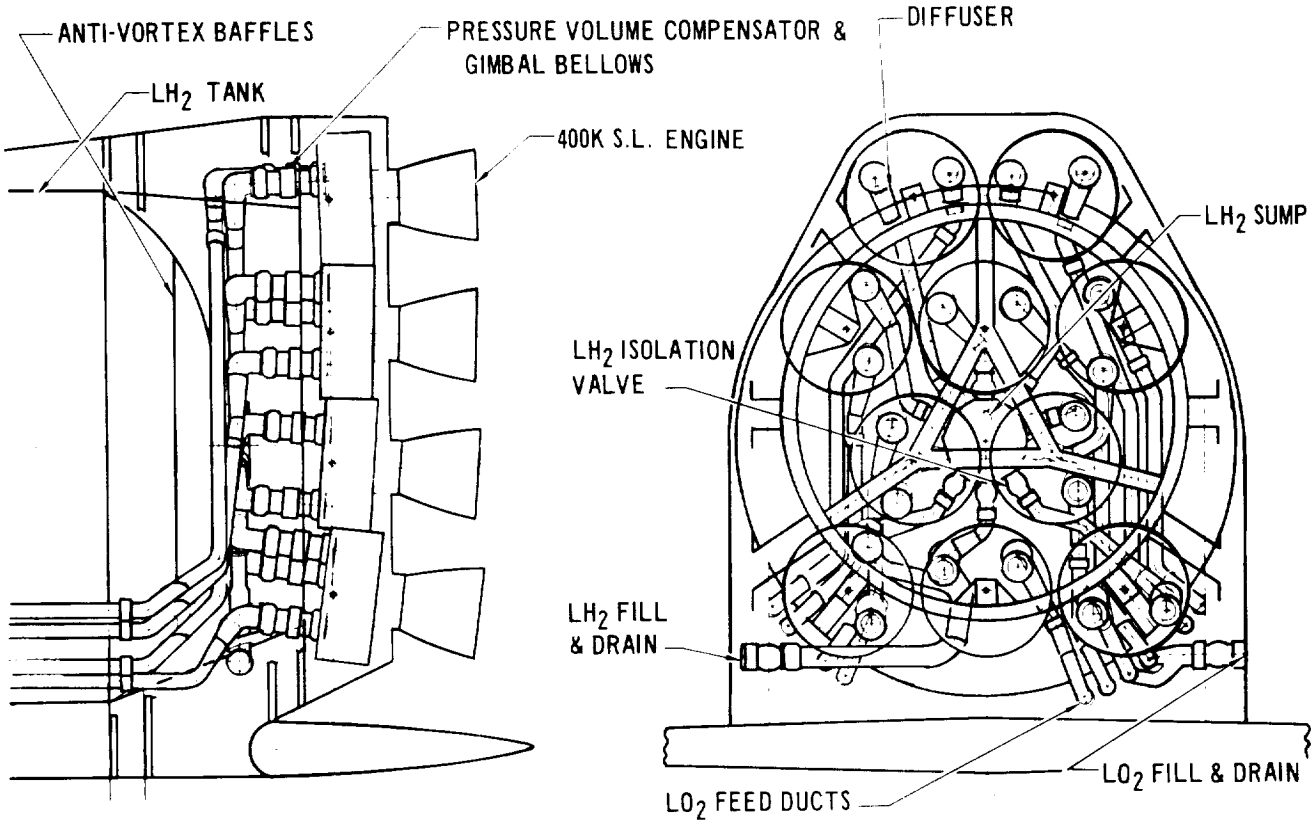

Figure 6.1-5

vortex baffle assembly and slosh baffles. The compartmented sump and the anti-vortex tank baffle are configured so that any vapor bubble generated by an engine shut-down can not be ingested by another engine. Figure 6.1-6 schematically shows the feed system to one boost engine. Single point fill/drain vehicle/AGE interfaces are used for each propellant. Initial helium engine requirements are ground supplied. Upon engine start-up, bleed GH_2 and bleed GOX are used to pressurize the hydrogen and oxygen tanks respectively.

BOOSTER ENGINE SYSTEM DETAIL

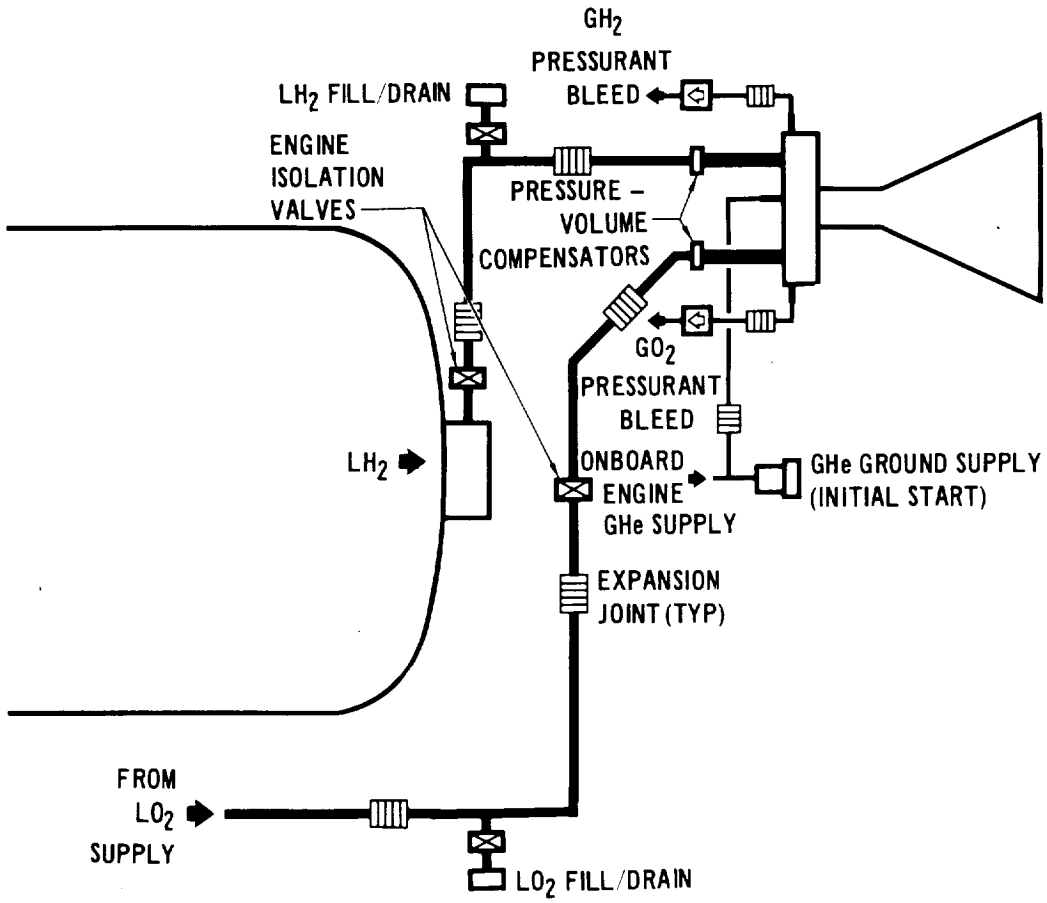

Figure 6.1-6

Orbiter - Figure 6.1-7 shows the feed system for the orbiter boost engines. System components such as compensators, diffusers, etc., as shown in Figure 6.1-5 are incorporated but have not been shown on the figure.

ORBITER BOOST ENGINE FEED SYSTEM

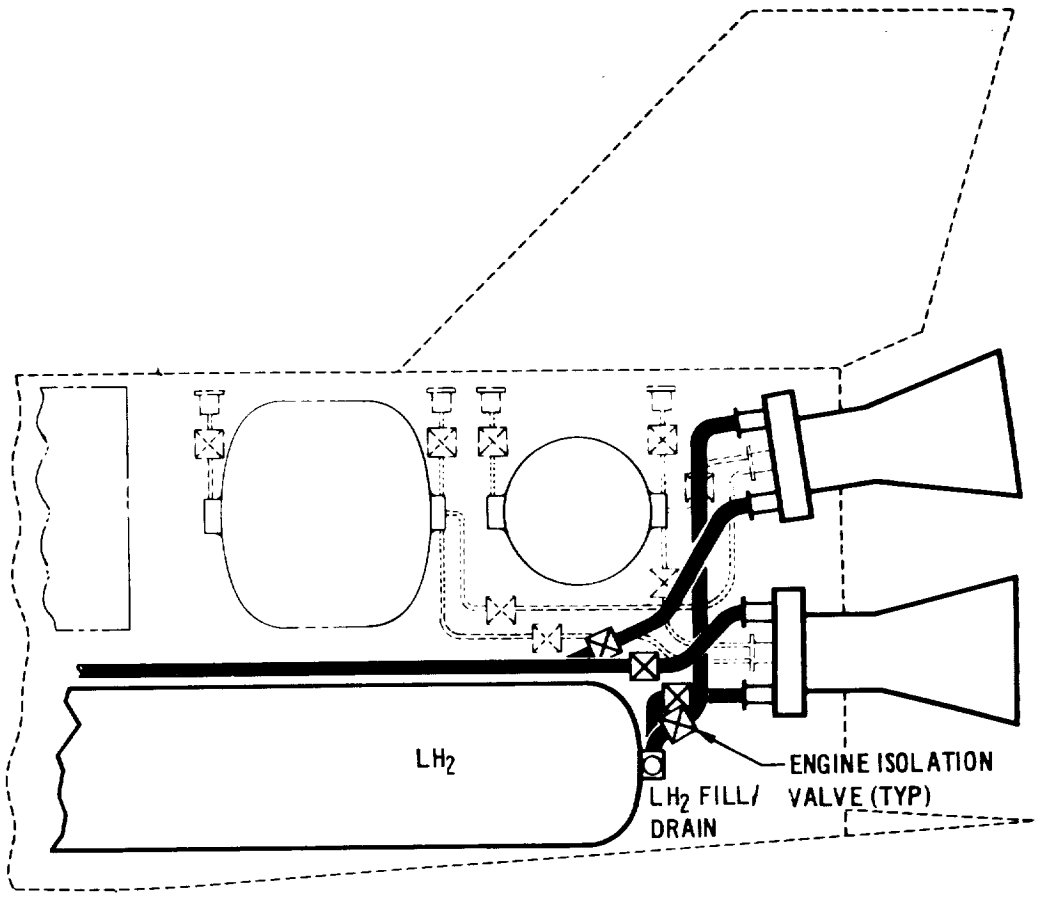

Figure 6.1-7

6.2 Orbit Propulsion

6.2.1 Requirements - On-orbit maneuvering and attitude control requirements are dictated by the nominal ΔV budget (Figure 6.2-1) and the required translational and angular acceleration response characteristics (Figure 6.2.2). The following discussions of the requirements assumes the large ΔV burns (e.g. initial circularization, orbit transfer, retro) are performed by the orbit maneuvering system. Gross attitude control during these burns is provided by gimballing the engines. All other orbital and reentry translational and attitude maneuvers are performed by the RCS.

NOMINAL ΔV BUDGET

	OMS	RCS
NOMINAL MISSION FUNCTIONS		
ORBIT TRANSFER AND CIRCULARIZATION	660 FT/SEC	
TERMINAL RENDEZVOUS		60 FT/SEC
DOCKING AND STATIONKEEPING		30 FT/SEC
DEORBIT (INCL 10% RESERVE)	535 FT/SEC	
DISPERSIONS		
PRECEEDING TERMINAL RENDEZVOUS		120 FT/SEC
DURING TERMINAL RENDEZVOUS		90 FT/SEC
GROUND TRACK ADJUSTMENTS		55 FT/SEC
VELOCITY INCREMENT REQUIRED	1195 FT/SEC	355 FT/SEC
VELOCITY MARGIN	450 FT/SEC	
TOTAL VELOCITY PROVIDED	2000 FT/SEC	

Figure 6.2-1

A .05 or greater thrust to weight (T/W) is desired during the larg orbital ΔV burns in order to minimize ΔV losses. However, in house studies (Reference 6.2-1) have shown that a .02 T/W, while being more sensitive to increased losses, requires only 4 ft/sec more than an impulsive burn when transferring from 100 to 260 nautical mile altitudes. Likewise, the same study has shown that no significant adverse effects of a .02 retro T/W can be detected. While the entry flight path becomes more shallow for a given ΔV at the low T/W's, the 10% deorbit reserve can be used to achieve the desired angle. The burn times during manned retro hold are increased, but sufficient time remains between the retro burnout altitude and entry to perform preparation tasks such as reorientation to the entry attitude.

The acceleration and impulse requirements for the RCS are shown in Figure 6.2-2. The T/W is dictated by the terminal rendezvous requirements. The .016 fore/aft (.5 ft/sec^2) value is based on in house man in-the-loop simulations and represents a realistic value in providing the braking maneuvers during the final nominal or dispersed intercept trajectory. The .008 T/W for lateral maneuvers is quite adequate for line of sight nulling during the terminal rendezvous.

The .5 deg/sec^2 orbital attitude control requirements represents a minimum value based on MSC Apollo simulations. Pilot preference will probably be higher (1.5 deg/sec^2). The entry values shown are based on an assumed 2 deg/sec^2 bank angle requirement in response to guidance commands. However, the roll requirements are dictated by the control necessary for an engine out during orbiter boost.

RCS REQUIREMENTS

FUNCTION	ΔV – FT SEC	THRUST WT	α – DEG SEC²			TOTAL IMPULSE (LB-SEC)	PROPELLANT REQUIRED LB (1)
			PITCH	ROLL	YAW		
ORBITER							
TERMINAL RENDEZVOUS	60	0.016 (FORE AFT) 0.008 (OTHER)	–	–	–	405,000	1310
DOCKING	30		0.5	0.5	0.5	203,000	655
ORBIT ACS	–	–	–	–	–	326,000	1050
ROLL DISTURBANCE (BOOST ENGINE OUT)	–	–	–	3.6 (4)	–	–	(3)
DISPERSIONS	265	–	–	–	–	1,775,000	5730
ENTRY	–	–	SMALL	1.0	1.73	360,000	1160
BOOSTER							
SEPARATION (2)							
ENTRY (2)						776,000	2500

(1) BASED ON I_{VAC} 310 SEC ε 1.5

(2) REQUIREMENTS NOT DEFINED – ORBITER ARRANGEMENT WILL BE USED PENDING FURTHER DEFINITION

(3) PROPELLANT DRAWN FROM ORBIT RCS BUDGET

(4) EQUIVALENT TO 60,000 FT-LB ROLL TORQUE AT 1 2 DEG YAW GIMBAL

Figure 6.2–2

Impulse requirements are shown in Figure 6.2-2 for the ΔV budget assigned to the RCS. In addition, the orbital and reentry attitude impulse are shown. The orbit amount is based on Gemini data and consists mostly of that required during terminal rendezvous. The entry amount is based on a single MSC entry run to a middle of the footprint target using Apollo guidance logic.

6.2.2 Orbit Maneuver System Description - The large orbital maneuvers may be satisfied by using one or both of the orbiter boost engines at reduced thrust level, or by adding an additional engine system, e.g. two additional RL-10 engines. A weight comparison of possible alternatives is shown in Figure 6.2-3. The lightest maneuver system is obtained with either the use of an advanced design high Pc bell nozzle engine operating in a pressure fed mode at 1% thrust, or the use of two additional RL-10 engines. The advanced design pressure fed concept has been based on the performance potentially achievable if an engine design could be

developed for optimum performance at both 100% and 1% thrust levels. The current design high Pc engine performance is estimated to be approximately 30 seconds lower in Isp, which causes the pressure fed system to be 2000 pounds heavier than the RL-10 installation. Since the advanced design pressure fed and the RL-10 concepts are essentially equal in weight, the pressure fed concept was selected for the baseline design to avoid the installation of additional engines. It must be pointed out, however, that the additional engine development required to achieve the high performance level has not been assessed. If later studies show significant cost or development advantages associated with the RL-10 engine concept, an engine change may be accomplished without significantly affecting the system weight budget. Significantly more analysis is required to refine performance and propellant consumption estimates before a final firm selection of an orbit maneuver ing system can be made.

COMPARISON OF MANEUVER SYSTEMS
ΔV = 1550 Ft/Sec

	HIGH Pc BELL CURRENT DESIGN PUMPED IDLE (10%)	HIGH Pc BELL CURRENT DESIGN PRESSURE FED (1%)	HIGH Pc BELL ADVANCED DESIGN PRESSURE FED (1%)	(2) RL-10'S PUMP FED (100%)
ISP (SEC)	451	391	420	444
MIXTURE RATIO	6	6	6	5
TANK PRESSURE (PSIA)	30	45	45	60
SYSTEM WEIGHT (LB)	(29,690)	(28,160)	(26,288)	(26,228)
ENGINE	100	100	100	780
HELIUM SYSTEM	557	–	–	20
LINES AND VALVES	403	317	317	317
TANKAGE	908	906	845	880
PROPELLANT				
ΔV	22,025	25,228	23,596	22,464
START LOSSES	1,910	–	–	713
SHUTDOWN AND COAST LOSSES	3,224	950	950	295
RESIDUALS	563	659	480	759

Figure 6.2-3

Figure 6.2-4 schematically shows the general arrangement of the maneuvering feed system.

ORBIT MANEUVER FEED SYSTEM

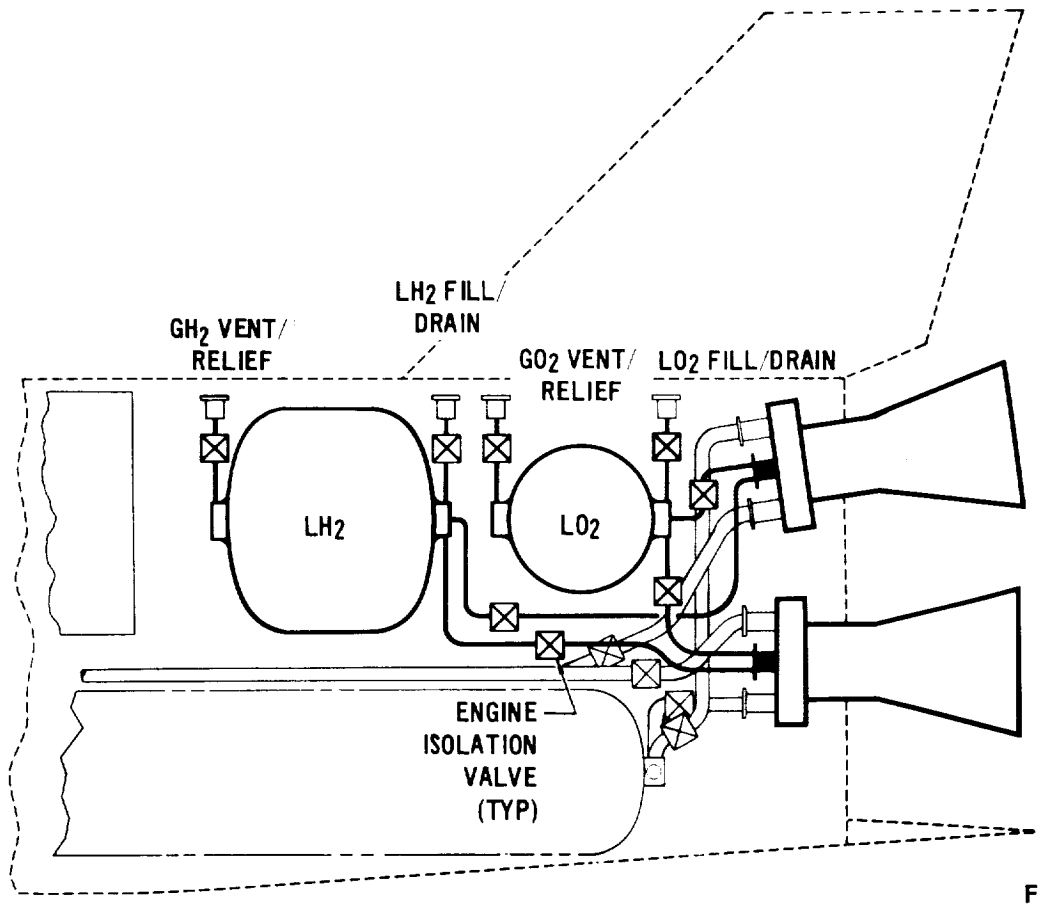

Figure 6.2-4

6.2.3 Reaction Control System (RCS) Description

6.2.3.1 RCS Engine Arrangement - The number of engines and the engine thrust levels may be held to a minimum by utilizing a combination of wing mounted and fuselage mounted engines as shown in Figure 6.2-5. The translation engines are also used for pitch and yaw attitude control, with roll control provided by additional wing mounted engines. Arrangements without wing mounting were considered but would require additional engines or higher thrust levels to satisfy the yaw and roll requirements. The arrangement shown provides for one engine out capability. Further redundancy will be provided in the system control components.

RCS ENGINE ARRANGEMENT

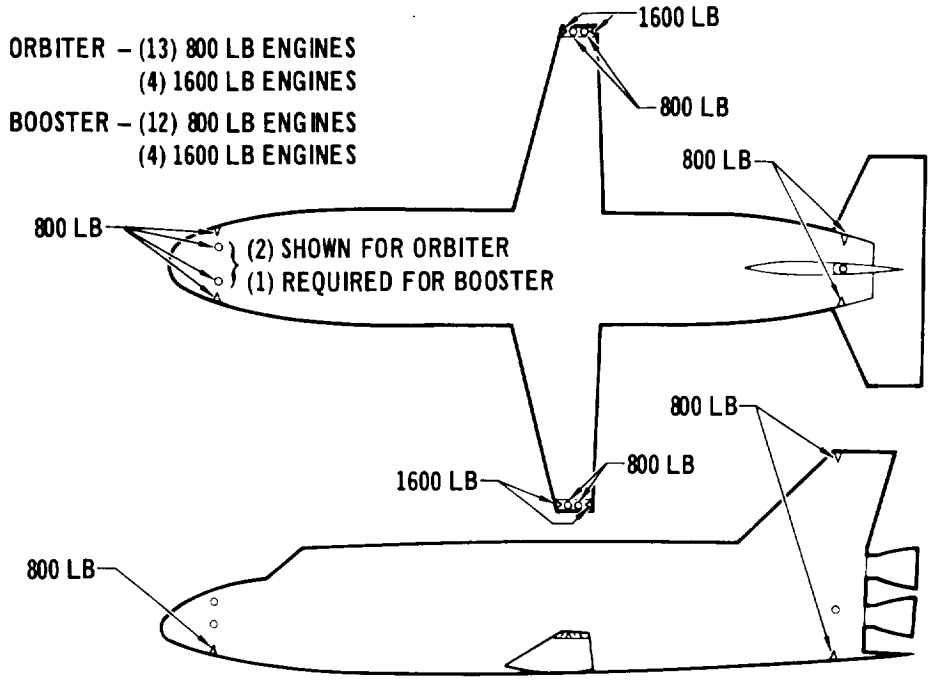

Figure 6.2-5

6.2.3.2 RCS System Type - A weight comparison of storable and cryogenic propellant systems is shown in Figure 6.2-6. A cryogenic O_2/H_2 system has been selected on the basis of competitive system weights, reduced turn-around time and commonality of propellants with the boost system. Two cryogenic system concepts, pressure fed and pump fed, are shown. The pump fed system is representative of a high performance concept which delivers superior performance, but requires turbopumps and gas generators and operates at high combustion temperatures. The pressure fed system is simpler, but delivers lower performance since uncooled engines engines (MR ≈ 2) and low expansion ratios ($\varepsilon \approx 1.5$) are utilized. The lower performance results in a heavier system weight because of the additional amount of propellant required. However, the pressure fed system weight could be reduced by utilizing boost and maneuver system residuals. A preliminary estimate indicates that about 10% of the required propellant could be obtained this way. The precise amount of weight savings realized depends on orbital heating and the RCS duty cycle, both which must still be analyzed. Currently, the same pressure level is used to supply propellants to the boost engines and the RCS thrusters. If it is determined that, for boost engine usage the design pressure of the boost tanks could be reduced, the use of a pressure fed RCS will incur an effective weight penalty, since such use will tend to negate any possibility of lowering boost tank pressure.

RCS SYSTEM COMPARISON

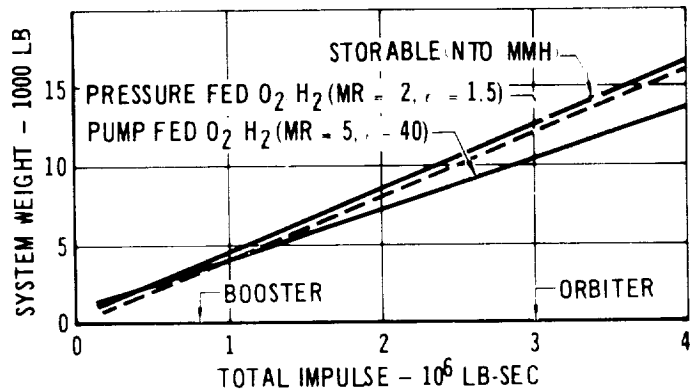

- O_2 H_2 (GAS) SYSTEMS ARE WEIGHT COMPETITIVE WITH STORABLE SYSTEMS
- O_2 H_2 SYSTEMS ARE DESIRABLE TO MINIMIZE TURN AROUND TIME AND PROVIDE PROPELLANT COMMONALITY
- PRESSURE FED O_2 H_2 SYSTEMS ARE ATTRACTIVE FOR INTEGRATED ECS, EPS, RCS
- PUMP FED O_2 H_2 SYSTEM SHOWS WEIGHT ADVANTAGE BUT IS MORE COMPLEX DUE TO ADDITIONAL TURBOPUMPS AND HEAT EXCHANGERS

Figure 6.2-6

Selection of a specific system concept is rather difficult. The development problems associated with turbopump systems are unattractive. In addition, the apparent weight advantage of the turbopump system is uncertain since the pressure fed system could use boost residuals and the turbopump system is sensitive to pump and gas generator efficiencies yet to be demonstrated. At this time, it appears that the better concept is the pressure fed system which may be heavier than a turbopump system, but should require less development and result in a simpler and more reliable system. More analysis is required to further evaluate each concept.

6.3 Subsonic Cruise Propulsion Analysis - A subsonic cruise propulsion subsystem is incorporated on both the booster and the orbiter to provide the capability of (1) cruise back to the landing site (booster only) and/or landing assistance (booster and orbiter), (2) go-around at the landing site, and (3) cross-country ferrying. The cruise propulsion performance requirements for each of these operations are summarized in Figure 6.3-1. In addition to the requiremements presented in Figure 6.3-1, the study requirements were that only off-the-shelf engines using conventional JP fuel were to be considered in detail. However, additional preliminary studies were performed to evaluate the use of hydrogen fuel and high thrust to weight engines.

6.3.1 Orbiter Cruise Propulsion

6.3.1.1 Engine Selection - The orbiter cruise propulsion subsystem is used to provide landing assistance, go-around capability and cross-country ferry cruise capability. It was found in the four engine configuration that if a go-around climb rate requirement of 2000 ft/min was met, the engines were adequately sized for the other mission requirements. To insure that the engines are not oversized, future studies should involve a more detailed evaluation of the go-around portion of the mission with special consideration given to the maximum climb rate. In a two engine configuration, the engine-out 4000 ft minimum altitude requirement would present the predominant engine sizing consideration. The JT8D-9 engine in a four engine installation was found to be a reasonable compromise in engine availability and required thrust level.

6.3.1.2 Fuel Requirements - An evaluation of the orbiter fuel requirements for landing assist and go-around was made. (See Section 8.8). The aggregate fuel required to perform these maneuvers was found to be equivalent to that consumed by all engines operating at S.L. take-off power for five minutes. This method of fuel quantity calculation was used in all system studies to avoid detailed recomputation. JP fuel was used in the baseline design.

CRUISE PROPULSION REQUIREMENTS

- CRUISE
  - BOOSTER
    - RETURN TO LAUNCH SITE
    - RANGE CONTINGENCY – 20%
    - ENGINE-OUT – MAINTAIN 4000 FT MINIMUM ALTITUDE
  - ORBITER
    - NO CRUISE REQUIREMENT
- LANDING
  - BOOSTER AND ORBITER
    - TOUCH-DOWN VELOCITY – LESS THAN 140 KNOTS
    - ROLL-OUT – CONSISTENT WITH 8000 FT RUNWAY
- GO-AROUND
  - BOOSTER AND ORBITER
    - CLIMB RATE – GREATER THAN 2000 FT/MIN AT S.L.
    - PROPELLANT REQUIREMENT – 5 MIN AT TAKE-OFF POWER
    - ENGINE-OUT – GO-AROUND NOT REQUIRED
- FERRY
  - BOOSTER AND ORBITER
    - CLIMB RATE – GREATER THAN 400 FT/MIN AT S.L.
    - RANGE – GREATER THAN 400 MILES
    - AUXILIARY PROPULSION AND TANKAGE PERMISSIBLE
    - NO PAYLOAD
    - ENGINE-OUT – MAINTAIN 4000 FT MINIMUM ALTITUDE

Figure 6.3-1

6.3.1.3 Installation Features - The baseline orbiter cruise propulsion installation is shown in Figure 6.3-2. In this configuration four engines are mounted within the forward fuselage. The JP fuel is stowed in wing tankage. Doors are installed in each of the four engines inlet ducts to protect the engines from boost and entry heating. The engine duct losses were estimated to be 5%.

The engine exhaust ducts are canted 20° to the vehicle axis. The cosine losses were considered but exhaust scrubbing losses on the side of the vehicle were not evaluated. A detailed study of the effective thrust loss and the effects of noise and vibration induced on the sides of the orbiter should be accomplished in future studies.

The effect of the build-up, launch, and space environments on the operation of current turbofan engines was explored with several engine manufacturers. In general it was felt that all anticipated problems could be solved with minor modification to current engine designs.

Vertical orientation of the engines during prelaunch build-up will very probably require minor modifications and/or special sumping of the bearing chambers. The effects of launch vibration, which might cause brinelling of the engine bearings may not be a problem since the loads may be more equally distributed in the vertical position and if the engines are shock mounted. Should bearing modification or engine shock mounting not be adequate, the turbine/compressor spools could be slowly rotated during launch.

The adaption of off-the-shelf turbofan engines to the space environment, as required on the orbiter, necessitate consideration of possible design modifications and/or special operating procedures.

Temperatures within the fuselage should not exceed the nominal operating environmental temperatures extremes of most engines. The engine will be protected from heating by the outer heat shield and by the movable doors on the air inlet duct. The design of the duct doors could incorporate methods for deflecting and/or capturing debris from the heat shield (if any) that could enter and damage the engine when the doors are opened after the entry.

The evaporation of lubricants and fuel within the engine might result in the deposition of potentially harmful residues. The addition of improved seals, flushing lines and drains, oil and fuel isolation valves, and/or the use of lubricants that do not leave deposits (i.e. polyphenyl ether oil) are methods which can be used to minimize or eliminate the potential problems of vaporization. Vacuum storage tests during developemnt are required to determine the requirements

and qualify any engine modifications. Space welding of metals in direct contact has not proved to be a significant problem in the past and is not expected to be a problem with the cruise engine or system.

The engines will be installed and removed through access panels on the side of the orbiter. Access to the engines from the inside is provided for service and installation requirements to minimize or eliminate the requirement for left hand and right hand engine components.

Windmill engine starting after entry is not expected to be difficult, although special consideration must be given to inlet design and operating procedures. For example, ignition may be delayed in order to have bearings adequately pre-lubricated. If necessary, residual hydrogen, oxygen, and/or helium could be used to aid ignition or to power a starting turbine.

Due to the close proximity of the engines, the pilots and critical vehicle components. consideration must be given to engine shock mounting, vibration detuning, and turbine and compressor blade containment.

CRUISE PROPULSION-ENGINE INSTALLATION

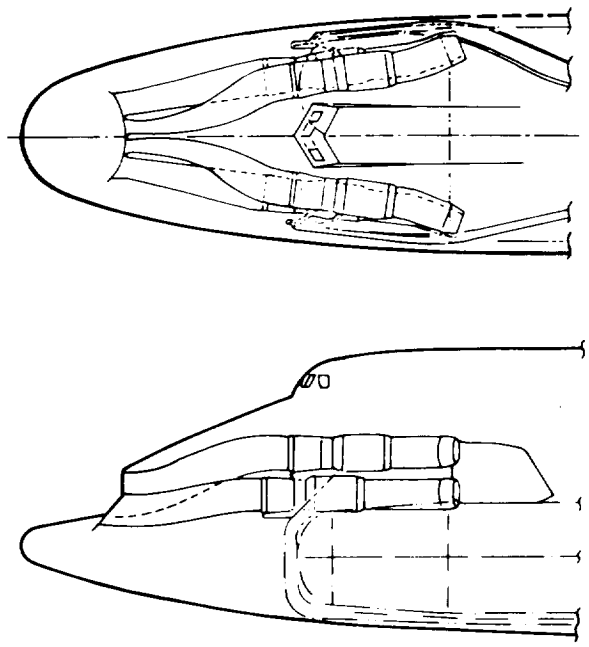

- ORBITER HAS FOUR P&W JT8D-9 TURBOFANS INSTALLED IN FORWARD FUSELAGE AS SHOWN
- BOOSTER HAS SIX P&W JT3D-7 ENGINES INSTALLED IN SIMILAR MANNER

Figure 6.3-2

6.3.1.4 Design Improvements - In the orbiter cruise propulsion system the largest contributors to weight are the engines. Although it is possible to reduce the total weight of the system by the substitution of hydrogen fuel for JP, a larger weight saving could be realized by reducing the weight of the engines. The data presented in Figure 6.3-3 illustrates this point. The adaption of hydrogen fuel to current JP engines has been accomplished in both ground and flight feasibility test programs, and appears to be practical without a major engine redesign. Figure 6.3-4 delineates some of the major advantages and disadvantages of using hydrogen fuel for the cruise system. Figure 6.3-5 presents estimates of the payload gains that may be realized by the use of hydrogen fuel and by the use of higher thrust to weight engines on the orbiter. It can be seen that improving the cruise propulsion system can have significant impact on the payload capability.

A trade study should also be performed to determine relative weights of turbojet and turbofan installations. Only turbofans were analyzed since there were no competitive turbojets (weight,size) in the required thrust range and the primary thrust sizing criteria was the S.L. go-around climb rate. If a reduction were made in the S.L. climb rate requirements it is possible that the reduced altitude sensitivity of the turbojet thrust may be more important than the increased specific fuel consumption rate and ultimately result in a lighter more compact system. Figure 6.3-6 shows that for short operating times (e.g. for orbiter) the cruise propulsion system weight is essentially insensitive to the type of engine used.

6.3.2 Booster Cruise Propulsion

6.3.2.1 Engine Selection - Unlike the orbiter, the booster has a long range cruise requirement. For this reason a significant portion of the system weight is fuel and the operating duration of the engine will be hours instead of minutes. Thus the engine selection for the booster should have the characteristics of low specific fuel consumption rate and significant operating life.

The thrust sizing of the booster cruise engines is accomplished by evaluation of both the thrust required to maintain level flight with an engine out at the beginning of the cruise, and the thrust required to meet the rate of climb for a go-around at the end of the cruise. The specific sizing depends primarily on the rate of climb required, the minimum engine-out altitude, the number of engines installed, and the type of fuel used. The baseline configuration selected utilizes an internally mounted six-engine configuration. The large number of engines reduces the effects of the engine-out flight condition. With this configuration the JT3D-7 engine has the required engine thrust level. This engine is a turbofan with a moderate bypass ratio (about 1) and an average specific fuel consumption rate.

CRUISE PROPULSION SYSTEM SELECTION

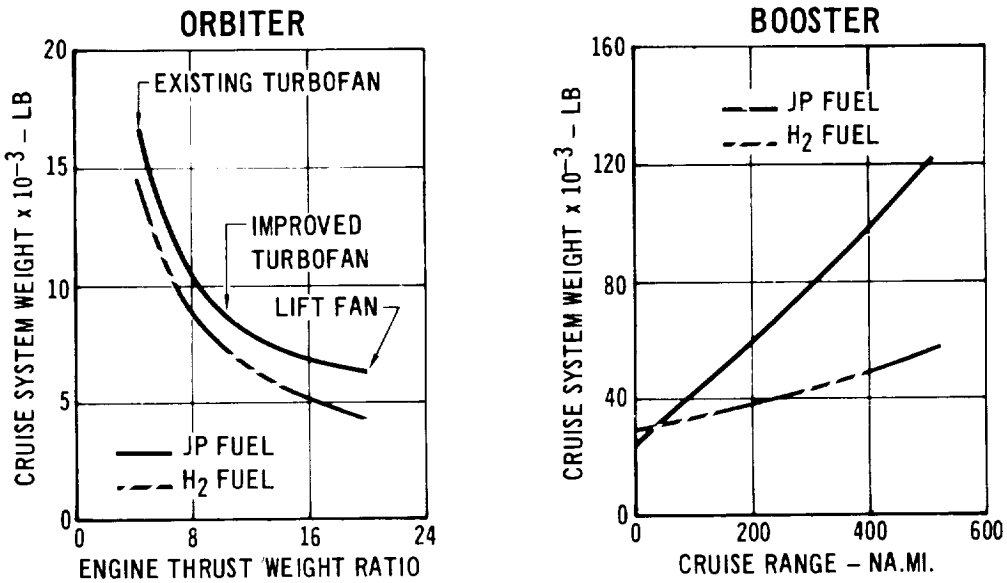

Figure 6.3–3

HYDROGEN FUEL FOR CRUISE PROPULSION

	PRO	CON
SYSTEM CONSIDERATIONS	LIGHT WEIGHT EASIER AIR STARTS COMMONALITY WITH OTHER PROPULSION SYSTEMS PROPELLANT USE MODIFIED BOOST TANKS (BOOSTER) OR MODIFIED OMS TANK (ORBITER)	LARGE VOLUME AVAILABILITY OF H_2 (FOR FERRY, ETC) LIMITED FUEL LEAKAGE MORE DANGEROUS
ENGINE CONSIDERATIONS	FUEL CONDITIONING UNIT REQUIRED REVISION OF FUEL MANIFOLDING AND COMBUSTORS	

Figure 6.3–4

SUMMARY OF PROPULSION SENSITIVITIES

SYSTEM		ITEM	PAYLOAD WEIGHT CHANGE (LB)
Booster	Boost	Increase I_{SP} by 1%	+ 1900
		Decrease ΔV Reqt. by 1% FPS	+ 1900
		Increase Initial T/W by 10%	+ 4300
	RCS	Increase I_{SP} by 10%	+ 40
	Cruise	Increase Engine T/W to 10:1	+ 2400
		Decrease Engine S.F.C. by 10%	+ 1200
		Decrease Cruise Range by 20%	+ 2400
		Change from JP Fuel to Hydrogen	+ 9500
Orbiter	Boost	Increase I_{SP} by 1%	+ 2200
		Decrease ΔV Req't. by 1%	+ 2200
		Increase Initial T/W by 10%	+ 1400
	Maneuver	Decrease ΔV by 100 ft/sec	+ 1500
		Increase I_{SP} by 10%	+ 2400
	RCS	Decrease ΔV by 100 ft/sec	+ 2200
		Increase I_{SP} by 10%	+ 1000
		Use 100 lb of Boost or OMS Residuals	+ 100
	Cruise	Increase Engine T/W to 10:1	+ 7000
		Decrease Engine S.F.C. by 10%	+ 300
		Increase Operating Time 100%	- 3200
		Change from JP Fuel to Hydrogen	+ 1500

Figure 6.3-5

CRUISE ENGINE EVALUATION

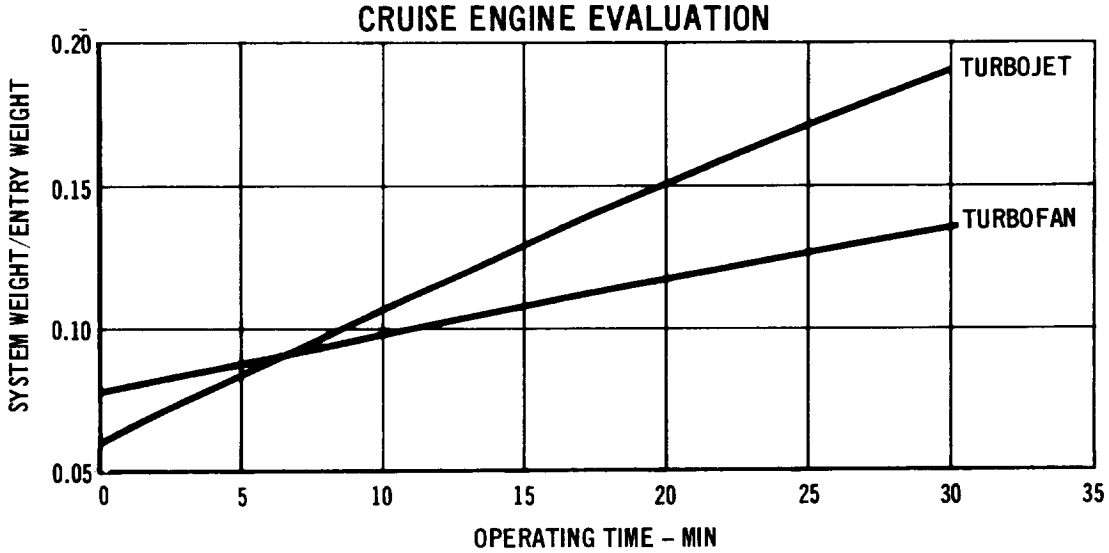

Figure 6.3-6

6.3.2.2 Fuel Requirements - On the baseline study, JP fuel was used for the booster cruise. The quantity of propellant required was based on a 400 nautical mile return to the launch site. A 20% range contingency was used to allow for performance reductions due to one engine out, adverse winds, non-standard day, etc. A more detailed evaluation of the range contingency should be undertaken in future studies. Go-around propellant and residuals were included in the propellant weight analysis.

6.3.2.3 Installation Features - Many of the cruise propulsion installation features on the booster are similar to those described above for the orbiter. Vacuum storage is not expected to be a problem on the booster engines due to the very limited time at high altitude. Shut-off valves in the fuel system will control vaporization.

6.3.2.4 Design Improvements - The booster cruise propulsion system weight is primarily comprised of fuel and, unlike the orbiter, significant weight savings could be realized by the use of hydrogen fuel.

6.4 Sensitivities - Figure 6.3-5 summarizes the sensitivity of the payload with respect to changes in assumed values of propulsion characteristics or requirements. As can be seen, changing from JP to hydrogen fuel for the booster cruise propulsion system and increasing the engine T/W for the orbiter cruise propulsion system has the greatest impact on payload. Relatively small changes in boost engine Isp results in significant changes in payload, although such results could be minimized by ΔV requirements reduction. As expected, increasing the lift-off T/W yields considerable increases in payload. Further optimization studies of T/W should be performed.

7. INTEGRATED AVIONICS

The emphasis of the Space Shuttle program is to achieve a high level of operational economy. This requirement, in conjunction with vehicle operation in the booster, spacecraft and aircraft flight regimes requires a new look at the design and implementation of the Avionics System. The new approach is called an "Integrated Avionics System" and it considers all known functional requirements of the mission during initial vehicle system design.

The basic rationale for the use of Integrated Avionics is derived from the measures required to achieve economy of operation. These measures are a self contained, crew controlled, prelaunch checkout capability, rapid turn around/reuse capability and a higher degree of mission success. Avionic capabilities must include self checkout, block and functional redundancy, and maintenance to a Line Replaceable Unit (LRU). These capabilities produce a large amount of system status data. This data, in conjunction with the system complexity due to the vehicle multiregime operation, require an advanced Integrated Avionics capability. To ensure compatibility with manned control, the Integrated Avionics system will provide a highly efficient data management and display/control capability. It will relieve the crew of excessive workload by automatically performing time critical functions and by providing priority sorting and data compression of that information needed by the crew.

The general avionic functions are:

- Vehicle Self Test and Warning
- Data Processing and Transfer
- Crew Command and Integrated Displays
- Target Tracking
- Autonomous Navigation and Flight Control
- Satellite Communications
- Supporting Energy Conditioning

More specific functions by mission phase are decribed in Figure 7-1.

AVIONICS–MISSION FUNCTIONS

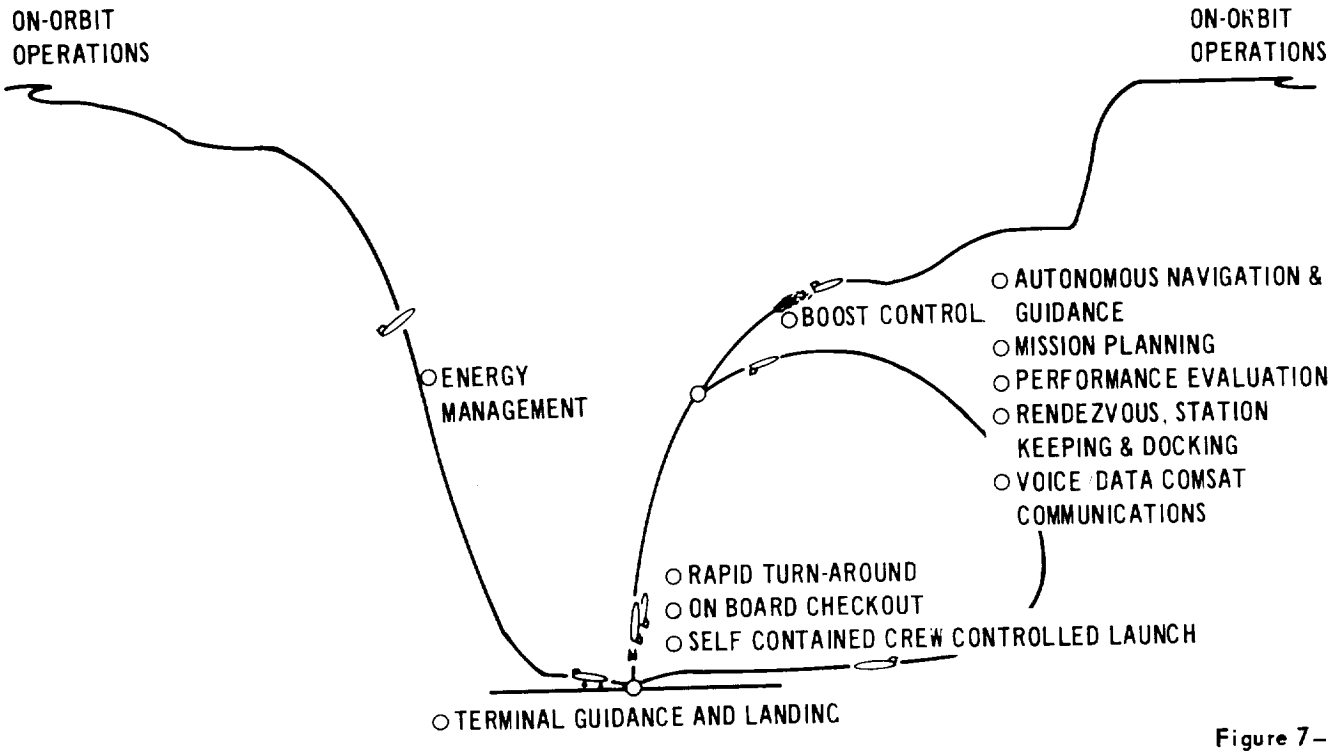

Figure 7–1

The key questions to be answered in order to define the Integrated Avionics System are: the means of implementing Data Management; On-Board Checkout; Display and Control; and Reliability, as well as, Reuse. The features that were evaluated in preliminary tradeoffs in this study are indicated in Figure 7-2. These tradeoffs are described and preliminary results indicated after the summary baseline system definition and description.

KEY QUESTIONS

DATA MANAGEMENT	• COMPUTATIONS – DECENTRALIZED • INTERFACE TECHNIQUE (MULTIPLEXED)
ON BOARD CHECKOUT	• BUILT IN TEST • LEVEL OF FAULT ISOLATION AND MAINTENANCE
DISPLAY AND CONTROL	• MULTIMODE INTEGRATED DISPLAYS • AUTOMATIC SEQUENCING
RELIABILITY & REUSE	• REDUNDANCY AND SELF TEST • MALFUNCTION DETECTION AND SWITCHOVER • MAINTENANCE PHILOSOPHY

Figure 7–2

7.1 System Definition - The elements of the Integrated Avionics system are shown in Figure 7.1-1. Equipment and configuration selection was made on the basis of: (1) an estimate of the 1972 technology status and (2) use of concepts which provide small development risks.

Inertial sensors are used as the prime source of navigation data through all active mission phases. Choice of inertial systems in both the booster and orbiter were dictated by the ascent guidance, entry to a pre-determined landing site and automatic landing requirements. Star trackers and horizon sensors provide autonomous on-orbit attitude and navigational updates. The multi-mode rendezvous radar provides for rendezvous with either cooperative or non-cooperative vehicles. A dedicated navigation computer supplies the unique requirements of individual system sensors while permitting the central software programming tasks to be maintained at a manageable complexity level. This keeps sensor unique computational requirements from impacting the central computational requirements.

The UHF communication link is utilized for EVA, inter-vehicle voice or data, and airport communication during the approach and landing phase. The Comsat-link provides nearly continuous communication capability between any ground station and the orbiter during the orbital phase of flight.

The display concept utilizing cathode ray tubes for multimode data presentation permits crew decisions on important tasks while relieving them of the need to monitor a large number of displays and meters.

A common, multiplexed data bus was selected to provide standardized digital interfaces, and to reduce the complexity and weight of interconnecting systems. The intermix of computers consists of a central data processor to perform mission oriented functions, and peripheral dedicated computers for sensor functions, navigation, flight control, and propulsion computations. This arrangement was chosen on the basis of commonality of requirements while maintaining equipment and software at manageable complexity levels. Thus, sensor oriented computational requirements, both hardware and software, do not impact the central computer.

On-board checkout minimizes ground support and expedites maintenance and reuse. Decentralized Built-In Test (BIT) was selected over a separate centralized test system to minimize interface complexity and provide subsystem functional autonomy. BIT provides self-test at all maintenance levels and permits identification of failures to the line replaceable units. Selective computer controlled access permits transmission of data pertinent to a particular mission phase, whether it be for flight, caution and warning, or ground base checkout.

BASELINE ORBITER INTEGRATED AVIONICS SYSTEM

COMMUNICATIONS
- SHF* (2) & UHF (2) TRANSCEIVERS
- PROCESSOR (3)
- INTERCOM & HEADSETS (2)
- OMNI ANTENNAS (4)
- *SHF DISH ANTENNA (1)

ELECTRICAL
- *FUEL CELL (2 OUT OF 4)
- *REACTANT SUPPLY (25%)
- BATTERIES (2)
- INVERTERS (4)

CHECKOUT & MONITORING
- PROPULSION PROCESSOR (3)
- INSTRUMENTATION PROCESSOR (3)
- INSTRUMENTATION SENSORS
- REMOTE MULTIPLEXERS
- FLIGHT RECORDER (2)
- *REMOTE TV CAMERAS

GUIDANCE AND NAVIGATION
- INERTIAL MEASUREMENT (3)
- NAV COMPUTER (3)
- *INTEGRATED OPTICAL & IR (2)
- *RENDEZVOUS RADAR (2)
- *DOCKING SENSORS (3)

CENTRAL MANAGEMENT
- CENTRAL COMPUTER (3)
- CREW

*DENOTES SYSTEMS NOT USED ON BOOSTER

LANDING & NAVIGATION AIDS
- VORTAC TRANSCEIVER (2)
- RADAR ALTIMETERS (3)
- AIR DATA SENSORS (3)
- ADVANCED ILS (3)

DISPLAY & CONTROL
- MODE CONTROL PANEL (2)
- HAND CONTROLLERS (2)
- MULTI-PURPOSE CRT DISPLAYS (6)
- HEAD-UP DISPLAY (2)
- *PRINTER (1)

FLIGHT CONTROL
- PROCESSOR (4)
- POWER SERVO AMPLIFIERS (4 PER FUNCTION)
- RATE GYRO (BACK-UP – 1)

Figure 7.1–1

Figure 7.1-2 shows size, power, and weight of the selected equipment. Booster equipment is identical to that of the orbiter, except that equipment utilized only for orbital operations is deleted. Such equipment, as well as the level of equipment redundancy, is identified in Figure 7.1-1.

ORBITER INTEGRATED AVIONICS PHYSICAL CHARACTERISTICS

EQUIPMENT TYPE	WEIGHT (LB)	SIZE (CU FT)	OPERATING POWER (WATTS)
GUIDANCE & NAVIGATION	720	11.8	2270
LANDING & NAVIGATION AIDS	170	3.05	460
COMMUNICATIONS	325	48.85	545
CENTRAL MANAGEMENT COMPUTER	180	3.0	500
DISPLAYS & CONTROL	477	8.25	1525
FLIGHT CONTROL	197	3.55	1115
CHECKOUT & MONITORING	125	2.1	260
ELECTRICAL	1860	37.0	10 KW (CAPACITY)
PWR DISTR AND CONTROL WIRE	700	10.0	
SIGNAL DISTR WIRE	1300	20.0	
TOTAL ORBITER AVIONICS	6054	147.6	5765 (PEAK)
TOTAL BOOSTER AVIONICS	3900	60.0	5042 (PEAK)

Figure 7.1–2

A more detailed system definition, including trade-offs, recommendations, and conclusions is continaed in the following paragraphs.

7.2 Data Management System (DMS) - The space shuttle will utilize an on-board computerized data management system to provide the information processing and system control required for automnomous vehicle operation. A baseline system was selected after a conceptual study of promising candidate approaches. This system divides the computational requirements between a general purpose central computer for mission oriented functions and special purpose dedicated peripheral computers for sensor oriented functions. A redundant multiplexed data bus is employed to reduce the weight and installation complexity of wire bundles. Standard digital interface circuitry was selected to provide flexibility and to simplify the interface design and management problem. Recommendations for follow-on study activities are made.

7.2.1 Requirements - The multitude of computational tasks that must be performed accurately and rapidly is beyond crew manual capability, and reliance on ground-based computers is not compatible with the autonomous nature of the space shuttle. For these reasons an onboard Data Management System (DMS), is required. The DMS will meet the following functional requirements:

a. Computational capability required by other subsystems during all phases of the mission.
b. Standard electronic circuitry to interface with a redundant multiplexed data bus.

7.2.2 System Description - The Data Management System is involved with the total complement of hardware and software required for data acquisition, processing, analysis and distribution of information to the space shuttle crew and other using subsystems. The two major aspects of the DMS task are the computational requirements, and the data bus implementation techniques.

Computational Requirements and Allocations - Figure 7.2-1 presents a list of subsystems and their information/computational requirements. This figure provides an insight to the magnitude of the computational task. In addition to conventional spacecraft computations such as guidance/navigation we have unique requirements such as propulsion trend data analysis which will be used to expedite ground maintenance.

The majority of these calculations are performed in the Central Computer Complex (CCC). However, some subsystems utilize dedicated special purpose

computational devices to satisfy unique computational requirements. Figure 7.2-2 shows the inter-relationship of the assemblies and identifies the major signal interfaces with other vehicle subsystems.

SPACE SHUTTLE COMPUTATIONAL REQUIREMENTS

GUIDANCE	ASCENT, ORBIT, RENDEZVOUS, REENTRY, LANDING, ABORT
NAVIGATION	INERTIAL, AUGMENTED INERTIAL, AUTONOMOUS
FLIGHT CONTROL	ATTITUDE, STABILIZATION
ON BOARD MISSION PLANNING	TRAJECTORY GENERATION, OPTIMIZATION & SELECTION, FLIGHT PROGRAM IDENTIFICATION, LOAD ALLEVIATION, ASSESSMENT OF UPLINK INFORMATION, CREW USAGE FOR SCIENTIFIC CALCULATIONS
CONFIGURATION AND SEQUENCING CONTROL	PAYLOAD PREPARATION & DEPLOYMENT, SYSTEM READINESS, SENSOR CONTROL, SAFING OPERATIONS, EXPERIMENT ACTIVATION & CONTROL, PILOT CHECK LIST
CREW DISPLAYS	SYMBOL GENERATION – PRIORITY & FUNCTIONAL SORTING
ON BOARD CHECKOUT	STIMULUS GENERATION, PARAMETER TOLERANCE BAND COMPARISON, TREND DATA EVALUATION
PROPULSION	OPERATION, PROPELLANT UTILIZATION, MALFUNCTION DETECTION, TREND ANALYSIS
DATA BUS MANAGEMENT	REQUEST/REPLY OPERATION, MESSAGE TRANSFER VERIFICATION

Figure 7.2-1

DATA MANAGEMENT SYSTEM BLOCK DIAGRAM

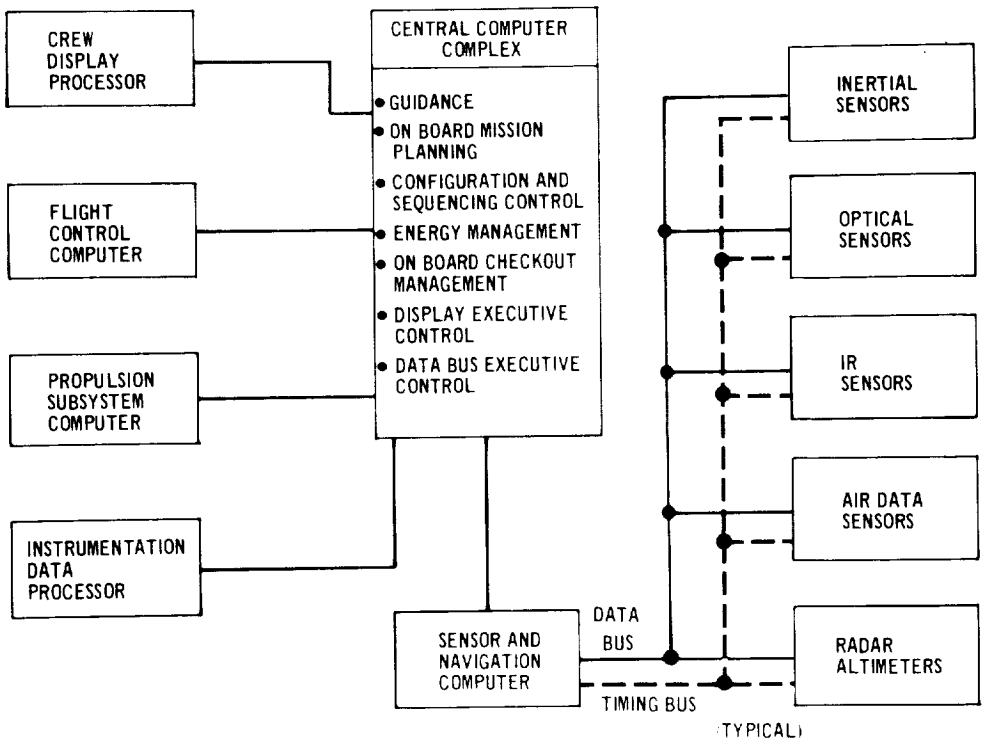

Figure 7.2-2

- The central computer performs the mission oriented calculations such as those required for guidance and onboard mission planning. In general, these are similar type computations and by grouping them in this same computer, software may be shared.
- The onboard checkout system utilizes Built-In Test (BIT). This requires that special logic and stimulus generation circuits be built into each LRU. The central computer continuously monitors the BIT control panel to determine the status of each LRU. The results of this routine are evaluated by the CCC and display instructions are sent to the symbology generator for initiation of status displays to the crew.
- A special purpose dedicated computer will perform the calculations necessary for control of the propulsion subsystem. The propulsion subsystem main elements are jet engines, main propulsion boost engines, and ACS reaction jet engines. These engines are distributed throughout the vehicle and remotely located from the central computer. The large amount of data associated with propulsion calculations such as propellant utilization and trend analysis, and the relatively remote location of propulsion equipment determines the need for a dedicated computer.
- The sensor and navigation subsystem has a number of high iteration rate and unique computational requirements, such as strapdown IMU coordinate determinations. A dedicated computer handles these requirements without impacting the central computer.
- A special purpose computer is assigned to the flight control subsystem. This subsystem provides high iteration rate control signals over a multitude of mission modes to a large number of control elements such as aerodynamic surfaces, thrusters, and brakes. The resultant large amount of data and diverse data traffic flow patterns justifies a dedicated computer.
- Cathode ray tubes were selected as the prime method for providing the crew with information displays because of their multimode capability. The implementation technique chosen for generation of CRT displays requires extensive symbology memory capability and high speed calculations related to CRT beam deflection and blanking. A special data processor is assigned to crew display subsystem for this purpose.

- The environmental control, hydraulic, and structure subsystems will include sensors such as temperature probes and pressure transducers. These sensors will be utilized for checkout and control purposes. Local multiplexers will employ standard instrumentation/telemetry techniques to collect, convert and combine signals from these sensors. Control of these remote multiplexers will be handled by the Instrumentation Data Processor. This processor will also make in-tolerance/out-of-tolerance decisions and send go/no-go and diagnostic information to the on board checkout system. In addition to this checkout mode of operation, the processor will utilize sensor information to generate subsystem control commands.

Data Bus Implementation Techniques - Current spacecraft and aircraft utilize individual hard wires as the transmission medium between black boxes and from subsystem to subsystem. The signal transmission system chosen for the space shuttle is a multiplexed data bus system. Equipments share this party line by use of standard interface circuitry and multiplexing techniques. This eliminates large, heavy and inflexible wire bundles. The resultant weight and space savings allow for the use of redundant buses to improve reliability. Data and signal interconnections between black boxes and between subsystems are via a two-wire twisted pair shielded cable. Selected analog signals and power will be routed by individual wires.

Figure 7.2-2 shows the navigation sensors connected to the navigation subsystem dedicated computer by means of a separate data bus. A timing bus is also shown for completeness. From preliminary estimates of data rates and data flow traffic patterns, it appears that separate buses will also be required for the flight control system and the propulsion subsystem. Intra-subsystem information such as computational data, status information and control commands will be multiplexed on each subsystem bus. The peripheral computers will be connected to the central computer with individual wires as opposed to a multiplexed bus. This is done because computer-to-computer data rates are in excess of a single bus capacity. Simultaneous transmission from computer to computer is also a requirement and this is not compatible with a shared party line bus concept.

The system employs serial digital time division Multiplexing (TDM) and is computer controlled using a request/reply data flow control technique. Bi-phase (Manchester) digital coding and AC coupling methods were selected. The system timing reference (clock) required for synchronization is transmitted over a separate bus.

Management of the interface can be greatly simplified if the data bus system includes Standard Digital Interface Circuitry (SDIC) in addition to the transmission bus itself. Figure 7.2-3 depicts this. With one standard design each subsystem vendor does not have to invent the same circuit. Development of SDIC will provide isolation and facilitate interface management. Figure 7.2-4 expands these thoughts.

A data rate of one million bits per second was selected because:

- Most computation and control functions must be accomplished on a real time basis. This rate is fast enough so that the time between data samples or control functions is short enough not to affect system operation or to introduce system dynamic errors.
- This rate is the upper limit for use of simple data transmission techniques and state-of-the-art qualified electronics.
- Data flow rates are estimated to be much lower than bus capacity. Thus, growth capability exists since additional black boxes or subsystems could be added at a later date.

The data bus transmission system described above will provide flexibility, simplify the interfaces, reduce the weight and installation complexity of wire bundles, reduce the time and complexity of the manufacturing and checkout operations and simplify the installation and removal of equipment.

DATA BUS MANAGEMENT

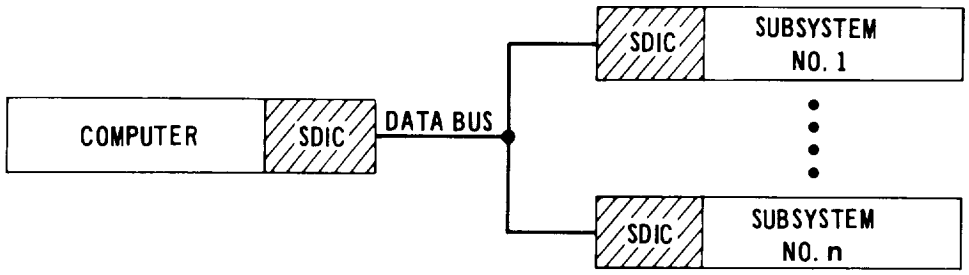

Figure 7.2-3

DATA BUS CONSIDERATIONS

ISOLATION	o CEI EQUIPMENT CAN'T CAUSE GLITCH ON DATA BUS o ELIMINATES MAJOR REDESIGN LATE IN PROGRAM CAUSED BY DISCOVERING OF PROBLEMS AT THE SYSTEM LEVEL TEST o ALLOWS PARALLEL DEVELOPMENT OF CEI EQUIPMENT WITH BUILD-AS-YOU-GO SYSTEM LEVEL TEST
INTERFACE MANAGEMENT	o ADDITIONAL INTERFACE SPEC (COMPARED TO CASE OF BOUNDARY AT THE WIRES), BUT IT IS EASY BECAUSE IT IS STANDARDIZED. o STANDARD DIGITAL INTERFACE REQUIREMENTS EASILY MET BY EACH CEI VENDOR USING WELL DEVELOPED ELECTRONIC TECHNOLOGY o MAXIMUM EXPLORATION OF BUS WIRE CAPACITY o ASSURANCE THAT ALL TERMINALS PATCHING INTO BUS WIRES WILL LOOK EXACTLY ALIKE AND WILL THEREFORE PLAY TOGETHER o GOOD FLEXIBILITY AND GROWTH CAPABILITY

Figure 7.2-4

7.2.3 Alternate Concept Evaluation - The centralization versus decentralization of computational equipment is a major consideration in determining the design philosophy and subsequent design configuration of the data management system. Five alternate computational approaches were evaluated. Figure 7.2-5 presents the results of this conceptual trade study. The selected allocation of computers consists

DMS COMPUTER DISTRIBUTION

COMPUTATIONAL APPROACHES	SELECTION RATIONALE
CENTRALIZED - CENTRAL COMPUTER/ MULTIPROCESSOR	o COMPUTER REQUIREMENTS LARGE o MAXIMIZES DATA TRANSFER AND BUS REQUIREMENTS o MULTIPROCESSORS NOT DEVELOPED o SOFTWARE TOO COMPLEX
DECENTRALIZED - DEDICATED COMPUTER FOR EACH SUBSYSTEM	o UPWARDS OF 30 COMPUTERS REQUIRED (INCLUDING REDUNDANCY REQUIREMENTS) o EXECUTIVE CONTROL/INTERFACE VERY COMPLEX o MANY DIFFERENT SPECIAL PURPOSE COMPUTER DESIGNS DUE TO DIFFERENT SPEED, WORD LENGTH, STORAGE, AND SOFTWARE. REQUIRES DIFFERENT SPECIFICATIONS, VENDORS, ETC.
FUNCTIONAL COMMONALITY - OPERATIONAL COMPUTER, STATUS COMPUTER, DISPLAY AND CONTROL COMPUTER, ETC.	o EXCESSIVE DATA BUS AND WIRES o DISSIMILAR OPERATIONAL CALCULATIONS, DIFFERENT WORD LENGTHS, ITERATION RATES, SOFTWARE, ETC.
PHYSICAL LOCATION COMMONALITY - EQUIPMENT LOCATION DETERMINES COMPUTER ASSIGNMENT	o EQUIPMENT LOCATION IMPACTS DATA TRANSFER TASK AND CONSEQUENTLY PROCESSING
HYBRID APPROACH - BOTH COMMONALITY OF CALCULATION AND LOCATION - SENSOR ORIENTED SPECIAL PURPOSE COMPUTERS (SPC) WITH MISSION ORIENTED GENERAL PURPOSE CENTRAL COMPUTER COMPLEX (CCC) √	o UNIQUE HIGH RATE AND TYPE COMPUTATION FOR SENSORS PERFORMED BETTER BY SPC WITHOUT UNDULY COMPLICATING THE CCC o SENSOR ORIENTED COMPUTATIONAL CHANGES (HARDWARE AND SOFTWARE) WILL NOT IMPACT THE CCC o MISSION FLEXIBILITY PROVIDED BY SOFTWARE CHANGES IN THE CCC o REMOTE SYSTEM WITH HIGH DATA REQUIREMENTS (e.g., PROPULSION), JUSTIFIES SEPARATE PERIPHERAL PROCESSOR

√ SELECTED

Figure 7.2-5

of a central computer complex performing mission oriented functions and pheripheral dedicated computers for sensor oriented functions, and was chosen on the basis of commonality of requirements and physical location. As an example of the advantage of grouping like computations in the central computer, the guidance algorithms may be used for both guidance and mission trajectory planning. In addition, the software can be modularized to reduce costs and provide redundancy. This approach maintains the hardware and software at manageable complexity levels. This also provides flexibility by facilitating changes, since the sensor oriented computational requirements, both hardware and software, do not impact the central computer.

Various interface implementation techniques were considered. Figure 7.2-6 identifies the candidate approaches, baseline system selections and rationale.

DMS INTERFACE IMPLEMENTATION

CANDIDATE APPROACHES	RATIONALE
⇨ o MULTIPLEXED DATA BUS o NONMULTIPLEXED HARD WIRE	o IMPLEMENTED WITH PARTY LINE OPERATION AND STANDARD DIGITAL INTERFACE CIRCUITRY o REDUCES WIRING o SIMPLIFIES INTERFACE
o MULTIPLEX MODULATION TECHNIQUES o ANALOG FREQUENCY DIVISION o ANALOG TIME DIVISION ⇨ o DIGITAL TIME DIVISION	o EFFICIENT TECHNIQUE FOR LARGE NUMBER OF LOW FREQUENCY SIGNALS o SIMPLE DIGITAL CIRCUITRY o INHERENTLY NOISE-IMMUNE
o TRANSMISSION LINE o COAXIAL CABLE ⇨ o TWISTED PAIR SHIELDED CABLE o FIBER OPTIC BUNDLES	o HIGH NOISE IMMUNITY o ALLOWS BALANCED DRIVE o LOW WEIGHT o GOOD HANDLING CHARACTERISTICS
o COUPLING METHODS ⇨ o AC o DC o ELECTRO-OPTICAL	o LOW AND HIGH FREQUENCY NOISE REJECTION o PROVIDES DC ISOLATION
o CODING METHODS o RZ o NRZ ⇨ o BIPHASE o DIPHASE o Etc.	o COMPATIBLE WITH OTHER SYSTEM PARAMETERS (e.g., AC COUPLING) o WIDELY USED TECHNIQUES AND CIRCUITS AVAILABLE

(ARROWS INDICATE SELECTED METHOD)

Figure 7.2-6

Digital time division multiplexing requires precise synchronization of transmitter and receiver so that received data can be detected and decoded accurately. Synchronization can be obtained by use of an accurate timing reference (clock) extracted from the data itself or transmitted over a separate line. A separate clock line was selected because its weight and cost penalties are offset by the saving in separate clock generating equipment required if the timing is extracted from the data.

7.2.4 Conclusions and Recommendations - The data management system described is the result of conceptual studies consistent with a Phase A effort. The selected baseline system satisfies the data management requirements of the space shuttle.

In the course of this study several areas requiring further detailed in-depth investigation were uncovered. These study recommendations are described below.

- Computer Organization - The centralization versus decentralization aspect of the computational task must be further evaluated. The amount of data, data rates, equipment locations, and data flow traffic patterns must be identified. This impacts both hardware and software configurations.
- Computer Configuration - Existing and proposed computer systems including multiprocessors should be examined for applicability to the space shuttle. If the centralized versus decentralized study determines the need for multiple computers, then most probably different generic types of computers will be required.
- Digital Interface Techniques - Both multiplexed data bus and non-multiplexed interconnection techniques should be studied. Equipment location and density of data flow between equipment are important considerations in determining the feasibility of multiplexing. Signals which may be multiplexed and which may not be multiplexed must be identified.
- Multiplexing Implementation - Assuming there will be some degree of multiplexing on the space shuttle the following parameters must be studied.
  - Modulation techniques
  - Coding/Decoding schemes
  - Word and message formats
  - Transmission lines
  - Signal coding and wave shapes
  - Coupling methods
  - EMI considerations

7.3 Self Test and Warning

7.3.1 Summary - In past spacecraft programs, significant expense has been associated with pre-launch test complexes and associated operations support personnel. Much time has been required for the planned series of pre-launch test activities. For the space shuttle the objective is to accomplish this pre-flight testing on board the orbiter in order to reduce cost and minimize test time, which is especially important for a reusable vehicle. The on-board checkout approach and associated maintenance philosophy will be patterned after the approach followed for airliners and military aircraft. Some degree of on-board checkout is required in all aircraft and spacecraft to permit evaluation of vehicle performance during flight. Post-flight maintenance activity can be expedited and simplified by making the in-flight on-board checkout capability sufficiently thorough for fault isolation to line replaceable units. The prevailing philosophy for advanced military aircraft is to provide a comprehensive on-board checkout capability which is equally thorough for pre-flight testing, in-flight performance assessment, and inflight testing for the purpose of expediting post-flight maintenance. The concept to be followed in the space shuttle will benefit from this prior spacecraft and aircraft experience. Two fundamentally different approaches to on-board automatic checkout have been utilized on military aircraft. In one approach, each subsystem incorporates the ability to perform a self-test. In the other approach, a central unit requests and obtains data from all subsystems and compares this data with established criteria in order to evaluate system performance. Varying degrees of comgination of these two approaches are possible. For example, the inherent presence of certain stimuli within a given subsystem would make it undesirable to generate duplicate stimuli externally, even if a central unit was used for data acquisition and comparison. In some cases, only minor system additions are necessary to provide meaningful built-in self-test capability. It seems likely that an optimum system will utilize a large degree of built-in test capability in individual systems, but will also utilize some degree of centralization, at least for assembling, recording, and displaying test results.

7.3.2 Functional Requirements and Goals - On-board checkout is a group of status checks and tests which are conducted to assure operational readiness of the various subsystems of the vehicle without ground facility support. In this context, on-board checkout does not imply a subsystem specifically incorporated to perform the checkout function, since a limited amount of operational readiness data will inherently be displayed or built in to the various subsystems.

The general goals to be met can be summarized as follows:

- o Provide crew controlled prelaunch and launch capability
- o Provide rapid turn around capability
- o Improve probability of mission success

A well designed on-board checkout system should include the following characteristics:

- o Automatic continuous monitor
- o Capability for crew initiation of supplemental tests
- o All failure data available for crew display
- o Provisions for permanent record of malfunctions
- o Capability for monitoring trend data in appropriate cases
- o Monitor all vehicle subsystems
- o Essentially all preflight test capability available during flight
- o Provisions incorporated for recognizing test system malfunctions

7.3.3 System Concept - An evaluation of onboard checkout techniques, which considered the use of a centralized system versus distributed Built-In Test (BIT), indicates the desirability of using self contained built in test circuitry in order to:

- o Minimize Interface Complexity
- o Provide Subsystem Autonomy
- o More easily fault isolate to a line replaceable unit.

The BIT system configuration is shown in Figure 7.3-1. The BIT control panel located in the pilot's compartment presents an indication of a faulty system by lighting the appropriate BIT control button and displaying on the status CRT, faulty equipment designation. For more detailed diagnostic data, the pilot presses the illuminated button to initiate a detailed diagnostic or fault isolation test within the faulty subsystem. The test results are fed to the central computer via multiplexed data line to be formated and accessed to the display system. This provides the crew detailed status analysis and allows an inflight decision on how best to proceed; whether to continue with a degraded mode capability, or switch to a redundant system.

To expedite ground maintenance, there is included an LRU status panel which identifies the compartment in which the faulty LRU is located. Each LRU has its own latching indicator to identify the failed LRU. In addition, LRU diagnostic data is stored in an inflight trend recorder to expedite repair.

Special features of the built in test system include:

- o The greatest practical amount of fault detection and fault isolation will be performed in flight; therefore, aircraft mean time to return to service and maintenance costs are significantly and effectively reduced.
- o BIT controls and displays consist of a control panel of switch lights and a status display CRT.
- o Performance degradation is displayed to the pilot on the status CRT.
- o BIT operation is part continuous and part initiated to reduce pilot tasks.
- o BIT display messages have a significant impact on computer memory requirements. The selected approach minimizes memory requirements.
- o The BIT interface is a hardwire and multiplex combination which has minimum weight, good maintainability, and maximum independence from the Central Computer Complex (CCC).

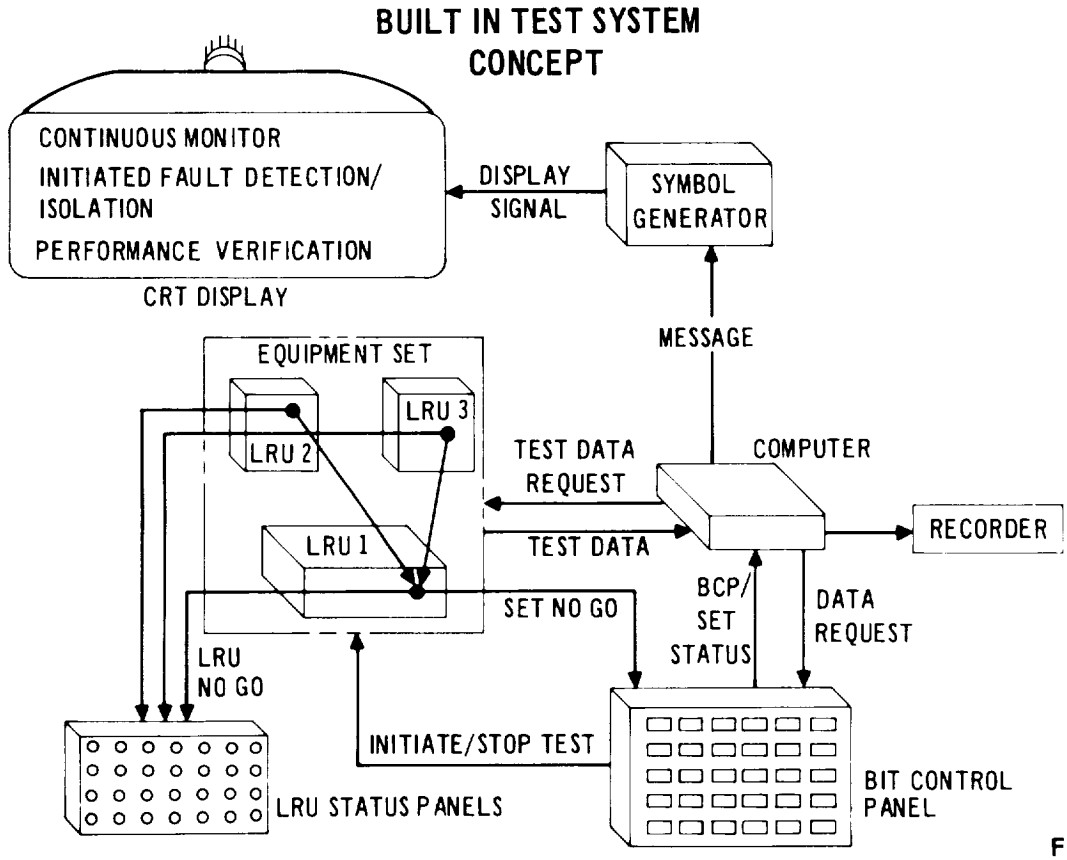

Figure 7.3-1

7.3.4 Built-in Test Implementation - The space shuttle system features three levels of self test:

- o Continuous monitor
- o Initiated fault detection/isolation
- o Diagnostic performance verification

All three levels can be employed in flight by the crew or on the ground by launch operations maintenance personnel. This design enables the flight crew to ignore detected faults in non-vital units (e.g. Instrument Landing System (ILS), anti-skid, etc.) if he chooses, or to initiate further testing to determine the extent of failure in vital units such as radar, or the Inertial Navigation Set. The capability to initiate fualt detection builds pilot confidence that essential units will operate during a critical phase such as entry.

To the greatest extent practical, all avionics are designed so that functionally associated components are contained within the same LRU. This feature simplifies the BIT required for isolation to a faulty LRU.

Continuous Monitor Test - The continuous monitor BIT mode operates totally independent of operator or CCC control. On a continuous or periodic basis, test circuitry within each LRU monitors voltages, currents, impedance, VSWR, etc., to determine if measured values are within preset tolerances. Faults are indicated on a cockpit BIT control panel. Since similar functional circuits are contained within a single LRU (for the majority of LRU's), detection of an out of tolerance condition also isolates the fault to the corresponding LRU. Independence from CCC control provides a test capability regardless of the CCC status; whether operating, inoperative, or removed from the vehicle. Depending on the complexity of specific units, continuous monitor fault detection/isolation capability will provide greater than 80% fault detection.

Initiated Fault Detection/Isolation Test - The initiated fault detection/isolation test increases pilot confidence that a set is functioning properly, or determines what functional capability has been lost in failed sets. The test may be initiated with a cockpit BIT control at any time, either in flight or on the ground. The CCC is required to be operating only if test results are desired to be displayed to the operator on the status display (latching fault isolation is made independent of the CCC). The fault detection/isolation capability is increased in this test mode to an average of 98 percent of all faults.

Diagnostic Performance Verification Test - The diagnostic test provides a virtually complete quantitative evaluation of performance capability, and provides fault isolation to a faulty LRU for 98 percent of all failures. In contrast to the continuous monitor and initiated fault detection/isolation tests, the diagnostic test utilizes the pilot or maintenance technician to exercise all modes of operation of the set, and is not limited to mode-in-use testings.

BIT Mechanization - BIT is implemented in three ways; (a) BIT controls and displays, (b) functional test circuitry within the LRU's of each set, and (c) software within the CCC. Human engineering principles have been employed to provide easily controlled testing, rapidly comprehended displays, and clearly indicated maintenance actions.

BIT Controls and Displays - BIT controls and displays are made up of four units whose sole function is BIT oriented: three display units functionally shared with other electronics operations and a trend data recorder. A cockpit-installed built-in-test control panel displays the go/no-go status of each electronic equipment set in the orbiter (both avionic and non-avionic), and controls start/stop of all initiated tests, either in flight or on the ground. One status panel installed in the equipment compartment provides a magnetically latching fault indication to indicate compartment location for each of about 100 LRU's, all of which have self test capability.

The display units shared with other functions are the master caution lights, used to indicate that a fault has been detected in essential sets; the warning/caution paenl, used to display safety of flight faults; and the equipment status display, used to display avionic set no-go, functional capability loss, and diagnostic test operator instruction readout and fault isolation data display. Audible alarms are also generated for safety of flight faults and emergency conditions to immediately alert the crew to these conditions.

BIT Control Panel - The BIT control panel consists of lighted, alternate action, pushbutton switches which serve a dual function. When illuminated, the lighted portions of the switches serve as set failure indicators. Also the switches can be activiated by an operator to alternately start and stop initiated fault detection/isolation or diagnostic testing. By means of a multiplex terminal, the BIT control panel is able to communicate digitally with the CCC. The CCC requests data from the BIT control panel on the test status of each set. When a set diagnostic test is desired, the test initiate signal from the BIT control panel is inhibited by the computer until the bulk storage tape is correctly positioned for the selected test.

Status Panels - One centrally located status panel provides a latching indication of the failed LRU compartment location, for post-flight launch operation maintenance action. The indicators are activated by either a continuous, or pulsed 28 VDC signal and are in paralled with the individual indicators mounted on each LRU containing BIT. The latching indicators are manually resettable after a faulty LRU has been replaced.

Trend Recorder - BIT data is also routed to the trend data recorder for later evaluation by the launch operations maintenance crew. The data will enable flight analysis of faults, aid in failure prediction, and contribute significantly in reducing failures on future flights.

BIT - Shared Cockpit Displays - Cockpit displays which share BIT with other display functions such as pilot alert or advisory displays are: (a) master caution lights, (b) warning/caution lights panel, and (c) equipment status display.

The master caution lights alert the pilot to vital equipment failure, and direct his attention to the warning/caution lights panel (safety of flight conditions) and the status display (all equipment failures).

The warning/caution lights panel, provides a failure indication for flight safety function such as the flight control system.

The equipment status display is used in all BIT tests to advise of set failures by displaying a three or four character alphanumeric mnemonic set name. When an initiated test is selected for a particular set, the word "TEST" also appears on the status display until the results of the test are decoded by the CCC, and any detected failures are displayed as three word messages describing the lost function. A second press of the set push button stops the test, and erases the data written on the status display.

BIT Functional Circuit Integration - Figure 7.3-2 illustrates the application of BIT to an individual functional circuit. A typical functional circuit, the associated BIT circuit and corresponding BIT self-test (BST) circuit are interconnected as shown. "BIT" on a signal line indicates the built-in-test circuit has detected a functional circuit fault; "BST" denotes a BIT circuit failure. Either a "BIT" or a "BST" (logically denoted BIT + BST) causes a LRU fault to be indicated. However, a "BIT" without the "BST" (denoted BIT o BST) inhibits the digital data word validity bit, meaning the data is not valid.

FUNCTIONAL CIRCUIT BIT INTEGRATION

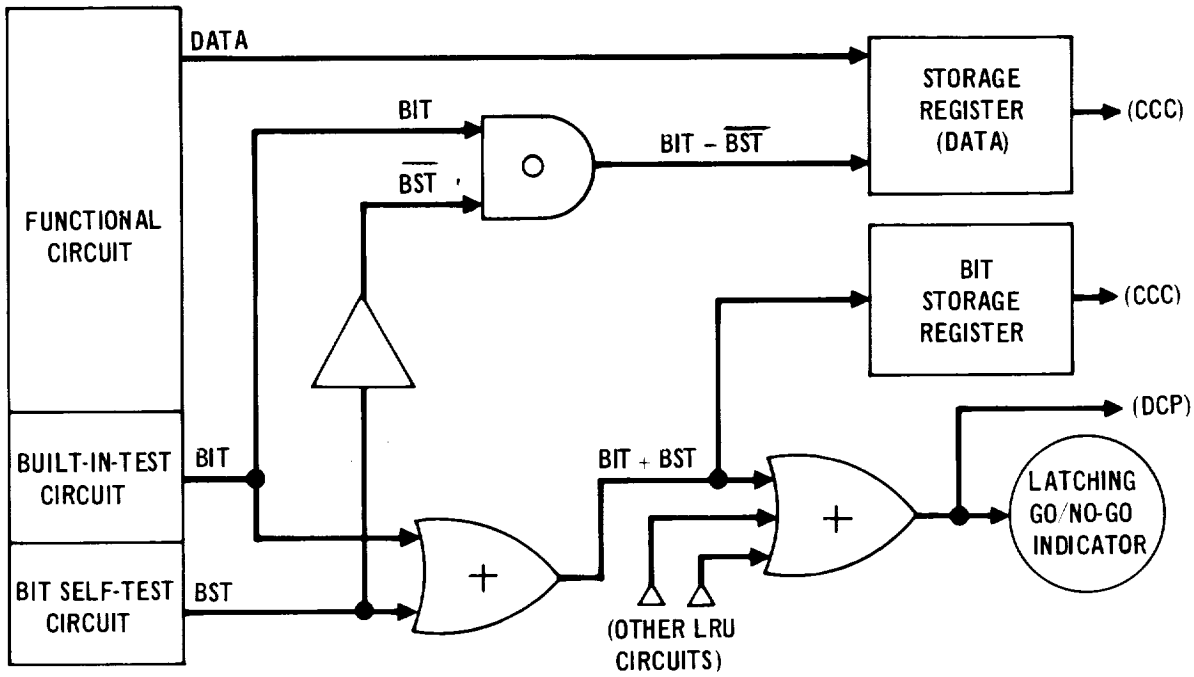

Figure 7.3-2

7.3.5 Central Computer Complex BIT Software - The Central Computer Complex performs the following BIT functions:

- Continuous Monitor - The CCC continuously monitors the BIT control panel individual set lights (on/off) and set switches (on/off) in a predetermined sequence to determine the status of all the sets. The results of this routine are evaluated by the BIT Module of the CCC and displayed by writing any failed set names(s) in an alphanumeric format on the status display.
- Initiated Fault Detection/Isolation - On command from the BIT control panel, the designated set initiates or stops self-contained fault detection/isolation testing. The CCC generated alphanumeric display messages for the status display are based on the BIT control panel status as evaluated by the BIT Module, set lights on/off, set switches on/off, and the individual LRU functional BIT data words as evaluated by the CCC BIT Data Module.
- Diagnostic Testing - On command from the BIT control panel the CCC initiates or stops set performance verification testing. When a diagnostic test is initiated, the CCC determines that bulk storage is interconnected, and inhibits the particular LRU BIT circuit test until the BIT monitor function reads diagnostic program data into the CCC. During this testing the LRU

data bits are compared directly with the CCC by the BIT Data Module. This testing provides up to 98% fault detection, isolation, and degraded performance information, as well as special alphanumeric displays, to indicate manual actions required and the reuslts of the diagnostic tests.

7.3.6 CCC BIT Sequencing and Control - The software program checks the test condition of each equipment set to determine present status. When test results are available the set name and status are displayed on the status display. Any messages that cannot be immediately used are sent to the deferred display table. The software routine also continually checks the deferred display table for any deferred messages that could be displayed during a new display period. Other functions of the program are to erase previously displayed messages when new ones are written and to determine if bulk storage data is available so that radar diagnostic testing can be done in place of the fault detection/isolation testing.

7.3.7 BIT Display Formatting - The BIT information is displayed in an alphanumeric format consisting of 15 characters per line. The display words are limited to four characters each, and describe functions such as set name, test and failed function. Messages are displayed starting with the bottom and continuing upward until the available space is occupied. Each message occupies only one line per set. When the available space is filled, new messages are written, again starting with the bottom line. However, previous messages indicating that a set is still in test are skipped over and not erased. When, on occasion, all lines are skipped during a display period, the new message is placed into the deferred display table for later display. When a message contains information involving a sequence of lost modes, the modes will be displayed and erased in sequence until the last mode is displayed and retained.

7.3.8 Installation - The BIT installation is subject to two constraints: (1) Separation between the status panel and the monitored units must be minimized for lowest practical weight penalty of the interconnecting wires; (2) The displays must be installed in an arrangement such that rapid cueing of status is provided to the pilot. An optimum separation between the status panel and the majority of the electronics can be provided by installing the status panel in the avionic equipment bay surrounded by the avionics units. This installation also provides quick access for the launch operations maintenance crew to view the status panel for LRU failure indications. The requirement for rapid pilot cueing has been satisfied by the philosophy shown in Figure 7.3-3. Failure of vital equipment is indicated by the master caution lights located in the pilot's central

vision. The pilot responds by looking to the equipment status display for the name of the failed set.

Conclusion and Recommendation - The ILRVS on-board checkout system implementation is within the present day technology. Detailed studies are required to fulfill the operational objectives of the ILRVS Program. Effort should be expended in identification of the parameters required for determining a flightworthy subsystem, with special emphasis devoted to non-avionic subsystems.

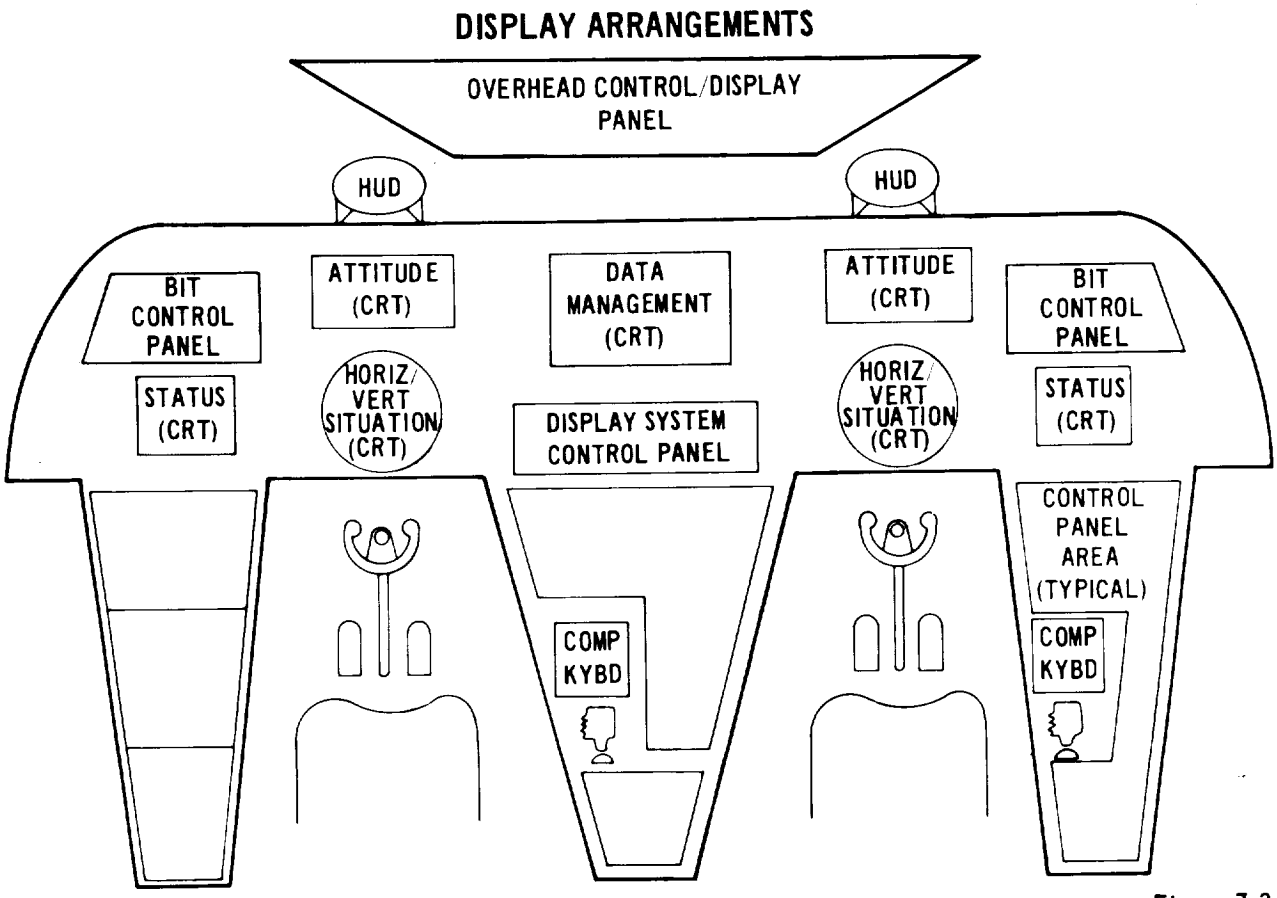

Figure 7.3-3

7.4 Displays and Controls

Summary - The displays and controls for the space shuttle vehicle utilize state-of-the-art devices and techniques to provide flexible display of multi-mode data with an acceptable work load for the crew. The space shuttle vehicles are both aircraft and spacecraft, designed for autonomous mission operation. This, in conjunction with on-board checkout and redundant systems, results in a significant amount of mission data that must be presented to the crew. A high degree of display automation is required to provide an acceptable crew task work load and timeline. Integrated electronic multi-mode displays are required to present data of

all the different flight regimes in a limited cockpit area and pilot viewing cone. In addition, the data will be segregated according to function.

The required dispay information compression is provided by the use of multi-mode Cathode Ray Tube (CRT) devices. These programmable devices allow the display of only that data pertinent to the present mission phase; all other data is relegated to the status monitor or caution/warning classification.

Cluttering of control devices is partially eliminated by mounting the jet aircraft engine throttles and rocket engine translational control stick on the pedestal between the two crewman. At present the usual transport aircraft control yoke and rudder pedals are provided for aircraft flight control, and a right-hand hand controller for orbiter attitude control in space. It is hoped that present flight test programs on aircraft control with a hand controller will allow the deletion of the bulky control yoke and rudder pedals. Special studies are also in process to determine the reliability of replacing the conventional bulky landing gear extension/retraction levers with redundant pushbutton switches and actuators.

Both control and dispay techniques and hardware for the space shuttle are being studied and evaluated in an in-house cockpit simulator. This continuing effort will be very instrumental in the design evolution of an optimum cockpit system, both in hardware selection and crew work load compatability.

7.4.1 Requirements - The primary crew control and display system design guidelines and desirable features are:

a. Allowance for autonomous launch, orbital, re-entry, and landing mission operations without crew task overload.
b. Provisions for two crewmen but flyable by a single crewman.
c. Maximum utilization of integrated electronic displays and controls over single purpose gauges and meters and toggle switches.

The inclusion of several automated, multi-mode displays requires a continuing evaluation of control and display techniques and hardware features in a cockpit simulator. This experimental approach with empirical crew performance evaluation is being used, and will be continued, to constantly refine the control and display system design.

7.4.2 Baseline Description

Displays - The basic mission operational data provided for each crewman includes vehicle attitude reference, horizontal or vertical situation, operational data from on-board systems, and status monitor of onboard systems. The display system

functional block diagram of Figure 7.4-1 shows how these data are presented to each crewman by direct view of four CRT's and a head-up display. Three of the four direct view CRT's are rear port tubes which can optically project slide or film (microviewer) images in addition to the normal electron beam written image. These easily accommodate large quantities of diagrams or checkout procedure data, too voluminous for digital memory storage. The Electronic Attitude Director Indicator (EADI) CRT replaces the conventional electromechanical 8-ball attitude director indicator and airspeed, vertical sink speed, and altitude needle gauges. The head-up display (CRT/optical) is provided to allow flight director symbology to be written upon the outside viewing reference to aid in space station or satellite docking and all weather landing approach.

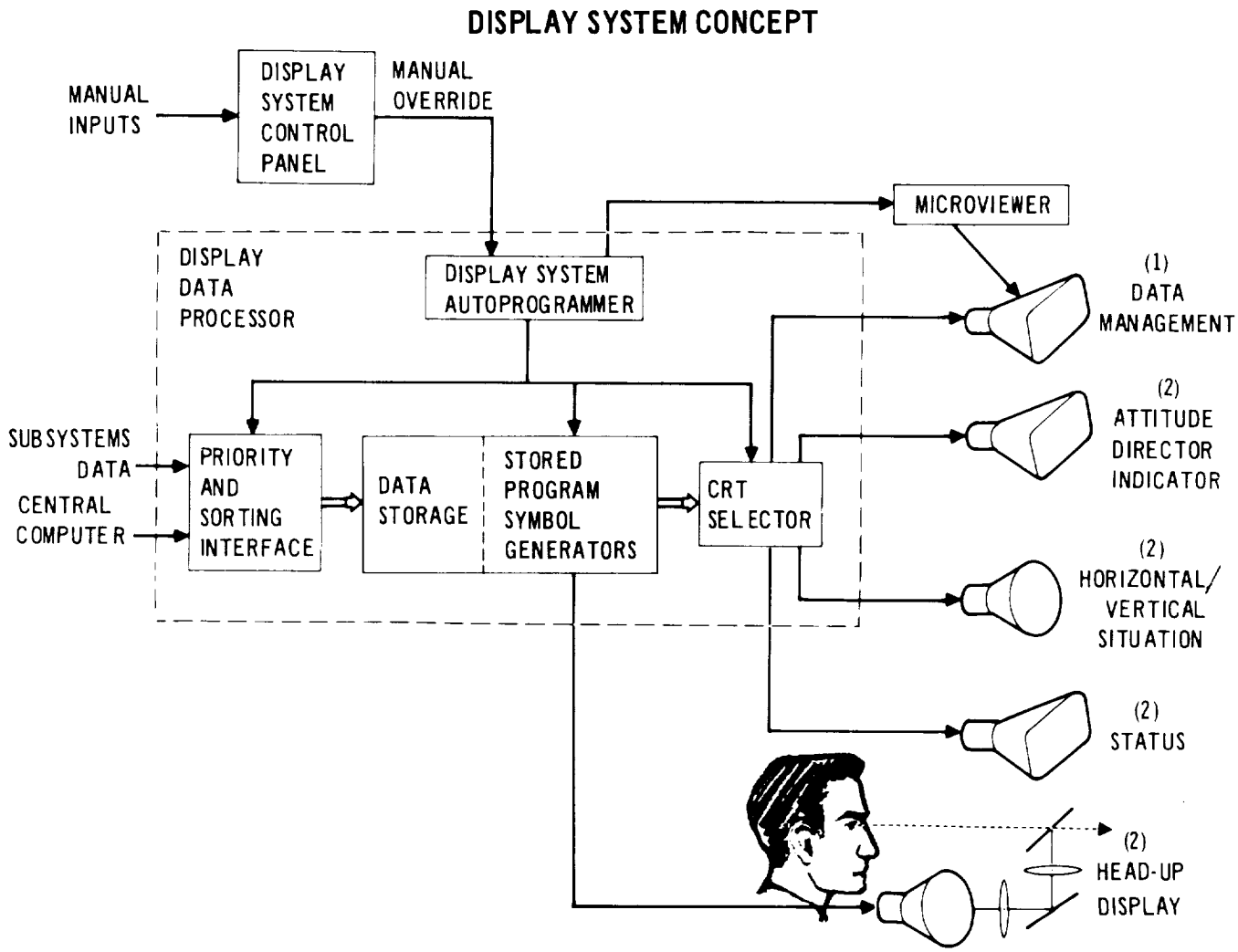

Figure 7.4-1

All data is sent to the display system through a standard interface for input signal conditioning, priority establishment, and sorting to channel the display data symbology to the proper CRT. The display data storage provides the required high rate CRT image rewrite to eliminate flicker. The display system mode control is automatically managed through the self-contained autoprogrammer. A manual override capability is provided in case of mission change or equipment failure; for example, the crew can switch a symbol generator to a different CRT via a command to the CRT selector.

Figure 7.4-2 summarizes the rationale used in selecting the baseline multi-mode display system design techniques from a field of candidate approaches.

MULTIMODE DISPLAYS STUDY SUMMARY

REQUIREMENTS/DESIRABLE FEATURES	CANDIDATE/BASELINE APPROACHES	BASELINE RATIONALE
• DISPLAY – C/O PROCEDURE AND DATA – CONTINGENCY MISSION PLANS – GUIDANCE/NAVIGATION DATA – HORIZONTAL/VERTICAL/ATTITUDE SITUATION DATA – STATUS, CAUTION & WARNING	• CATHODE RAY TUBE (CRT) • SLIDE/FILM PROJECTORS • CRT WITH SUPERIMPOSED SLIDE CAPABILITY • AUDIO, LIGHTS • PLASMA TUBE DISPLAY DEVICES • SCALE SCRIBES, DIALS, GAUGES	• CRT AND CRT WITH SUPER-IMPOSED SLIDE CAPABILITY – PROVIDES MULTIFORMAT DATA DISPLAY – ELIMINATES EXTRA SLIDE SCREEN, ATTITUDE 8-BALL, & SEPARATE GAUGES – SIMPLIFIES REDUNDANCY • FLASHING LIGHT/HEADSET AUDIO FOR CAUTION AND WARNING
• HEAD-UP (OUTSIDE) PROJECTION DISPLAY FOR DOCKING AND LANDING AID	• CRT/REFLECTIVE OR REFRACTIVE OPTICS • ELECTROMECHANICAL/OPTICAL	• BEST PHYSICAL CHARACTERISTICS AND RELIABILITY AND DESIGN EXPERIENCE
• SIMPLE SIGNAL INTERFACES	• ALL SOURCES INPUT DATA TO SINGLE DISPLAY SYSTEM SORTING/PRIORITY INTERFACE UNIT • MULTIPLE INTERFACES (G&C, ELECT PWR, PROP, ETC.) WITH DEDICATED DISPLAY DEVICES	• SIMPLIFIES DISPLAY MODE CONTROL, STANDARDIZES INTERFACE CIRCUITRY TO COMMON DISPLAY DEVICES, ELIMINATES MANY DEDICATED DISPLAY DEVICES
• CRT BEAM DEFLECTION/BLANKING COMMAND RATE HIGH ENOUGH (50–60 Hz) TO PREVENT FLICKER	• SAMPLE INPUT SOURCE DATA AT LOW RATE (1 Hz) AND DISPLAY SYSTEM MEMORY USED FOR 50–60 Hz CRT REFRESH • SAMPLE INPUT SOURCE DATA AT 50-60 Hz FOR CRT REFRESH	• BEST DESIGN EXPERIENCE • MINIMIZES DATA BUS REQUIREMENTS
• REDUNDANCY	• HARDWARE REDUNDANCY • DEGRADED MODE OPERATION	• SYMBOL GENERATOR TO TUBE CONNECT – SELECTABLE • MICROVIEWER CAPABILITY REDUNDANT

Figure 7.4–2

Figure 7.3-3 depicts how these functional display devices might be integrated into the space shuttle cockpit panel. Note that the single data management CRT called out in Figure 7.3-3 is shared by the two crewmen. The overhead area of the cockpit shown in Figure 7.3-3 will be used for some of those displays requiring infrequent viewing. For example, the master caution and warning lights are on the main display panel. However, the main fault annunciator panel for all the subsystems is located on the overhead panel. This is the same layout as used on the MDC DC-10 aircraft.

All CRT displays will contain contrast enhancement design features such as:

a. Built-in tube faceplate black layers, and/or
b. Tube faceplate attached filters (i.e., micromesh, neutral density, polaroid), and/or
c. Built-in panel photometer detectors with feedback CRT beam current intensity control

All these features are considered for enhancing display contrast during all phases of the mission.

Controls - These are basically categorized as attitude and velocity control, central computer access, and subsystems selection or mode control.

The baseline cockpit functional layout of Figure 7.3-3 shows the conventional control yoke/rudder pedals system for aircraft attitude control and hand controller for spacecraft attitude control. The aircraft systems control yoke and rudder pedals may be removed later depending on flight test results of aircraft flight control by a hand controller. The final decision will be based on the results of flight tests on the McDonnell Douglas F-4 aircraft and the Cornell University variable stability aircraft. Mounting the velocity control devices, aircraft jet engine throttles and translational rocket control stick, on the center console would allow the crew to share these devices and thus further reduce device clutter and eliminate duplication. Studies to date also indicate tha the conventional bulky landing gear extension/retraction levers can be replaced by push-button initiated actuators. These seldom used smaller devices could also be placed on the overhead panel to eliminate viewing clutter.

Each crewman has access to the on-board central computer via a computer keyboard. This allows data insertion for mission parameter update subsystem commands via computer control, or control of data recording via the on-board printer for post-flight maintenance and quick turnaround.

Subsystem selection and mode control is provided through several control panels containing a mixture of push buttons, thumb wheels, and twist knobs. Crew programming of such control actions via the computer keyboard must be limited because rapid response is many time required, and memorization of control action codes should be minimal. Push button switches (mono and multi-function) will be used in the subsystem control panel areas to minimize the number of toggle switches and levers which were typically used in the past. Several thumb wheels and twist knobs will still be incorporated for such functions as communication channel select or manual slew of antennas or TV cameras. These single purpose devices can be grouped by subsystem for quick recognition. In many cases these devices can be shared between crewmen by mounting them on the center console or overhead panel.

Figure 7.4-3 summarizes the above discussion by presenting the rationale used in selecting the baseline control devices from a field of candidate approaches, based on the requirements and desirable features.

CONTROLS STUDY SUMMARY

REQUIREMENTS/DESIRABLE FEATURES	CANDIDATE BASELINE APPROACHES	BASELINE RATIONALE
• ATTITUDE CONTROL	• BETWEEN-THE-LEGS CONTROL YOKE WITH RUDDER PEDALS FOR AIRCRAFT SYSTEMS CONTROL • FLY-BY-WIRE HAND CONTROLLER FOR SPACECRAFT SYSTEMS CONTROL • CONTROL YOKE RUDDER PEDALS WITH SWITCHABLE OUTPUTS TO EITHER SYSTEM • HAND CONTROLLER WITH SWITCHABLE OUTPUTS TO EITHER SYSTEM	• PREVIOUS PILOT ASTRONAUT EXPERIENCE • POTENTIAL CHANGE TO USE OF HAND CONTROLLER WITH SWITCHABLE OUTPUTS, BASED ON MDC F-4 AND CORNELL UNIV VARIABLE STABILITY AIRCRAFT FLY-BY-WIRE TEST PROGRAMS
• COMPUTER ACCESS	• ALPHANUMERIC KEYBOARD • TAPE, CARDS, ETC	• BEST FLIGHT EXPERIENCE, FLEXIBILITY, AND RELIABILITY
• CRT DISPLAY MODE CONTROL	• DISPLAY SYSTEM AUTOPROGRAMMER WITH OVERRIDE CAPABILITY • AUTOMATIC COMPUTER SELECT OF MODE • MANUAL ACCESS (KEYBOARD) TO COMPUTER TO SELECT MODE • MANUALLY SELECT MODE	• SIMPLIFIES PILOT TASK BUT LEAVES HIM AS MANAGER OF DISPLAY SYSTEM
• OTHER (I.E., CHECKOUT TEST OVERRIDE, SELECT COMMUNICATION CHANNEL, MANUAL SLEW OF ANTENNA OR TV CAMERA, ETC.)	• PUSHBUTTONS - MONO AND MULTIFUNCTION - COLOR CODED - OPERATION LOCK-OUT BY COMPUTER • THUMBWHEELS • TWISTKNOBS • COMBINATION OF ABOVE • PILOT PROGRAM THROUGH COMPUTER KEYBOARD	• PREVIOUS PILOT ASTRONAUT EXPERIENCE • COMPUTER KEYBOARD PROGRAMMING REQUIRES EXCESSIVE CODE MEMORIZATION BY PILOT

Figure 7.4-3

7.4.3 Alternate Concept Evaluations - Alternate control/display techniques and hardware are being studied and evaluated for both hardware simplicity and pilot acceptance in an in-house simulator. This simulator uses CRT's integrated into a cockpit mockup. Figure 7.4-4 shows a schematic of the space shuttle control/display simulator to test variable approaches in all mission phases. Figure 7.4-5 summarizes the possible uses for this simulator leading to good cockpit design.

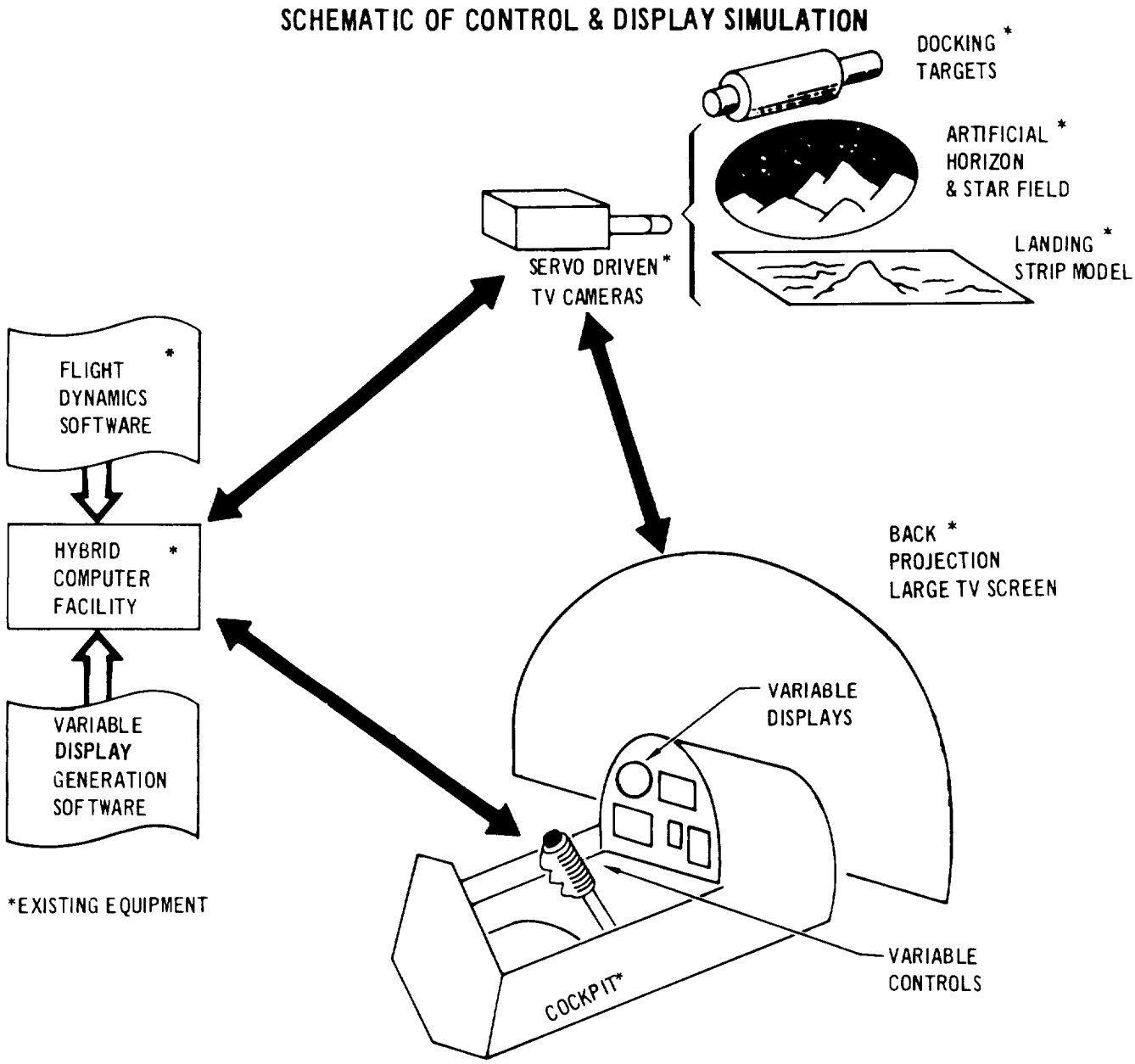

Figure 7.4-4

POSSIBLE USES FOR SPACE SHUTTLE CONTROL AND DISPLAY SIMULATOR

1. IN GENERAL, REFINE CONTROL AND DISPLAY REQUIREMENTS THROUGH AN EXPERIMENTAL AND EMPIRICAL APPROACH
2. EVALUATE ACTUAL HARDWARE IN A REALISTIC CREW ENVIRONMENT
   - EQUIPMENT LAYOUT FEASIBILITY
   - VIEWING ANGLES, REACH TO TOUCH DISTANCES, TACTILE SENSE
   - AMBIENT LIGHTING CONDITIONS (VISUAL CONTRAST)
   - CRT REFRESH RATE TO ELIMINATE FLICKER
3. DETERMINE CRT DISPLAY REQUIREMENTS
   - SYMBOL SIZE, SHAPE, CLUTTER ELIMINATION
   - DIGITAL MEMORY CAPACITY, WORD LENGTH, BIT TRANSFER SPEED
4. EVALUATE ALTERNATE HARDWARE APPROACHES TO DISPLAY OF SAME DATA
   - SUBSYSTEMS DATA TO DISPLAY SYSTEM INTERFACE SIMPLICITY
   - SUBSYSTEMS DATA INTERROGATION RATE VS DISPLAY SYSTEM MEMORY CAPACITY FOR CRT IMAGE REFRESH RATE TO ELIMINATE IMAGE FLICKER
   - DISPLAY SYSTEM MODE CONTROL AND SWITCHING LOGIC
5. TEST FOR FEASIBILITY OF USING 3-AXIS HAND CONTROLLER FOR ALL FLIGHT REGIMES
6. DEVELOP CREW TASK TIMELINES

Figure 7.4-5

7.4.4 Technology Status

Control Devices - These are in a satisfactory state of development. The latest technologies will be used to minimize the control panel clutter, ease the operator's task, and improve system reliability.

Computer keyboards using non-contact switching techniques, such as hall effect or magnetic core interactions, are now available and provide switching reliability of the same order as the computer itself. Suppliers such as Hazeltine Corporation also offer 52 character keyboards with all the conventional control switches in a module containing only 20 pushbutton keys.

A significant reduction in the number of single purpose controls can be made by the use of Category/Function Modules and Touch Tuning Systems. For example, Hazeltine Corporation makes a Category/Function Module which contains 16 pushbuttons with split legends. This small panel allows the selection of up to 20 different functions from 5 different categories (i.e., 100 switching functions accomplished with only 16 switches). Suppliers such as Collins Radio can provide a single keyboard for complete touch tuning of a communications system including transmission/receiving frequency selection.

MDC is also fabricating a mode and switching logic analyzer in conjunction with the space shuttle simulator. This special purpose, digital logic device will be used to evaluate alternate switching techniques for displays and other shuttle subsystems. Computer feedback signals to switches can be used to simply execute complex

switching tasks. This includes switch logic lock-out during mission phases when the switch is not needed. Moreover, the switch surface can change color when the switch logic is computer exercised or when this switch is actually depressed by manual action.

Cathode Ray Tube Displays - Cathode ray tube displays are in an advanced state of development and are presently flying in several aircraft. These systems include electronic symbol generators. Many flight symbology generation techniques (i.e., waveshape, dot, stroke, etc.) are available for review and evaluation.

Typical Electronic Attitude Director Indicator (EADI) manufacturers include Sperry Flight Systems, Astronautics Corporation of America, Norden, General Electric, and Kaiser Aerospace. CRT use in military aircraft includes the A-6A, A-7D, and F-111, and they are to be used in the F-14 and F-15. Commerical aviation experience includes flights aboard the Boeing 707,Convair 880, and FAA certification testing aboard the DC-7. They are also planned for use on the DC-10 and SST.

Manufacturers of Head-Up Display (HUD) units include Bendix, Conductron, Kaiser, General Electric, Librascope, and Norden. The average physical characteristics of the units available from these suppliers are 43.5 pounds, 1961 cubic inches, and 167 watts. Some of these companies can provide integrated HUD and EADI systems and thereby derive a size, weight, power reduction over the units supplied as separate modules. The HUD also has considerable flight experience aboard both military and commercial aircraft.

Conrac Corporation has qualified a CRT display system to NASA space qualification standards. This is the dual CRT display to be flown on the Apollo Applications Program. This program application together with present aircraft usage indicates few developmental problems for a wide environmental spectrum.

Other Display Devices - Other display devices, which are potentially attractive and for which technological review and evaluation will continue, include:

- o Plasma tube displays
- o Electroluminescent displays
- o Multi-scale sliding tape displays

The plasma tube matrix display technology is a candidate to complement or back-up CRT displays. Suppliers such as Owens Illinois have display matrix panels with resolutions as high as 60 lines per inch in the final stages of development. These units could provide image flexibility with resolutions as good as commercial television.

Electroluminescent displays are considered only for bar graph type presentations. These units are attractive for their low power requirements. Development efforts are in process to overcome their lifetime and brightness shortcomings.

Multi-scale sliding tape displays are attractive candidates to complement some CRT display parameters, and to serve as back-up parameter displays. One Vertical Scale Instrument (VSI) can have several tape scales, or a single tape which displays different scales on different sections of the sliding tape (i.e., different altitude scales depending on mission phase). A multimode, single tape VSI is being produced by Hartman Systems, Inc. and is going to be flight tested on the C-141 aircraft. The same technology could be used on the space shuttle to display several different parameters in the cockpit panel area of one conventional vertical scale instrument.

7.4.5 Problem Areas/Technology Recommendations

CRT Display Physical Characteristics - The size, weight, and power of most CRT display systems reviewed to date indicate a lack of miniturization, primarily in the symbol generator units. These digital logic and digital-to-analog converter units need further development to reduce printed circuit board size, utilize low power logic, and improve electronic packaging design.

CRT Viewability - The visibility of cockpit CRT's in high external ambient lighting conditions is degraded by light transmitted through the cockpit window and subsequent reflections onto and from the CRT faceplate. The visibility of the CRT is not dependent upon image brightness alone, but on a combination of brightness and contrast.

The use of CRT displays on the A-6A and F-111 aircraft, with wrap around cockpit windows, has been made possible by use of attachable filters(i.e., neutral density, polaroid, micromesh). These filter aided displays provide adequate image contrast even in the worst case ambient lighting conditions. CRT displays with filters have been tested and found acceptable for viewability in the MDC design and cockpit simulator tests for the military F-14 and F-15 aircraft design competition competition programs and the commercial DC-10 aircraft.

Recent advances in increasing the tube image brightness from 200-500 foot-lamberts to 1500-2000 foot-lamberts has enhanced image viewability but has proven inadequate for some lighting conditions. The most interesting high contract CRT developments in recent years have been the "optical diode filter" and "dark layer filter". These filters are thin films, deposited on the CRT faceplae and structurally carry the normal CRT phosphor. These tubes have been tested and shown viewable under direct impinging sunlight. The dark layer filter tube has been developed

by Hughes Aircraft, and by a combined effort of Signatron Inc/Electro Vision Industries. Hughes Aircraft Company actually modified existing Sony television tubes (Sony 140 CB4). The "optical diode filter" tubes were developed and tested primarily by Hartman System Company under NASA Electronic Research Center contract. This tube presents an image that is distinct and clear with high contrast even under direct outdoor sunlight.

The dark layer filter and attachable filter design approaches are compatible with the conventional optical projection schemes used with rear port CRT tubes. The optical diode tube in a rear port configuration would require changing to say a a mercury vapor lamp to provide an ultravilot projection system.

Techniques and hardware are available to overcome the CRT viewability problem in the space shuttle. MDC recommends the use of panel mounted photometers with feedback to the CRT beam intensity control circuitry to automatically vary image brightness under varying lighting condition. Kaiser Aerospace includes this design feature in addition to normal manual control on their F-111 aircraft HUD and EADI system.

Multi-Colored CRT's - MDC in-house evaluations of the Sperry, General Electric, and Norden EADI's in the DC-10 simulator has resulted in a pilot request for multi-color flight symbols to avoid symbol ambiguities. In some flight modes the command and flight symbols become superimposed and some pilots have subsequently flown to the wrong symbol. Both General Electric and Sperry are presently evaluating two color (red, green) tubes in their EADI systems. Both of these systems employ dual phospher tubes with color derived by modulation of the high voltage. The DC-10 will have a two color CRT system to display automatic landing performance.

Present demands for airborne multi-color CRT display systems will result in continuing design improvements in this field. Multi-gun CRT design approaches are also being developed for color displays: this approach eliminates the high voltage modulation problem associated with dual phospher, dual voltage techniques.

7.5 Guidance Navigation and Control

7.5.1 Requirements - The task of directing a space vehicle, to accomplish a given mission, is customarily discussed in terms of three functions: navigation, guidance, and control. As the boundaries between these functions are somewhat arbitrary, the terms, navigation, guidance and control, are used here in the following context.

- Navigation is the determination of position and velocity of the vehicle from onboard measurements.

- o Guidance is the computation of maneuvers necessary to achieve the desired conditions of a trajectory (e.g., an insertion into orbit).
- o Control is the execution of the maneuver (determined by the guidance command) by controlling the vehicle attitude and proper force producing elements.

Navigation, guidance and control requirements applicable to the STS vehicle include orbital insertion, rendezvous, stationkeeping, docking, entry (includes cruise and landing to a pre-selected site) and the capability to ferry the booster and the orbiter between airports. In addition general requirements of particular significance to the G, N, & C design are: (1) autonomous operation during the ascent, orbital and entry phases of flight to minimize ground support and cost; (2) mission and growth flexibility, and (3) on-board checkout and failure detection. Figure 7.5-1 lists specific G, N, & C requirements for the different mission phases and shows their applicability to booster and/or orbiter. The basic requirement for navigation is similar for all mission phases. The accuracy of information and source of data, however, is dependent on the particular mission phase. The guidance and control requirements are highly dependent on mission phase or tasks to be performed. The equipment configuration for the selected G, N & C system

GUIDANCE, NAVIGATION & CONTROL REQUIREMENTS

REQUIREMENT	APPLICABILITY	
	ORBITER	BOOSTER
All Azimuth Launch Capability	X	X
Information for Termination by Onboard System	X	X
Rendezvous and Stationkeeping with Passive of Cooperative Target	X	
Three Axis Translation	X	
Three Axis Attitude Control	X	X
Orbit Guidance and Navigation Functions Onboard	X	
Automatic Approach and Docking	X	
Return Guidance and Navigation Onboard	X	X
Manual Landing Complying with Minimum FAA Requirements	X	X
Automatic, Zero-Zero Weather Landing	X	X

Figure 7.5-1

7.5.2 System Description - The baseline guidance, navigation and control configuration consists of the following:

- o A strapdown inertial measurement unit,
- o A dedicated inertial navigation computer,
- o A radar for rendezvous and station keeping,
- o An optical and IR tracker integrated into one gimballed head assembly,
- o A laser docking sensor aided by TV for crew display,
- o Tacan and air data sensors as navigational aids,
- o A dedicated flight control computer with separate control element power amplifiers,
- o An advanced all weather automatic landing system,
- o An interface with the central management computer and the crew to provide guidance and mission oriented tasks.

During ascent, control steering signals are generated for the complete trajectory by the orbiter inertial navigation and guidance system. The booster navigation system is active throughout its ascent phase and provides the basis for guidance during booster entry and return to the landing site. During booster cruise and return to the landing site, the air data sensors and Vortac provide data which can be used to enhance the long term accuracy of the inertial navigation system. The central management computer acts as an evaluator, or filter, to determine the best estimated of velocity and position from the various sources of navigational information. Booster landing can be performed manually or automatically through use of the Advanced Instrument Landing System (AILS). If an abort were required, steering signal guidance command would be generated from the separate booster and orbiter navigation systems in a manner similar to those used during a normal ascent.

Rendezvous and stationkeeping range and relative angular information is provided by a multimode radar. Range of the radar for passive targets is 30 miles. For cooperative transponding satellites, the range is increased to 400 miles. An alternate and backup capability is provided by the optical tracker. This back-up capability includes all cooperative targets, and sunlit uncooperative targets.

A laser sensor was selected as the means of providing accurate angular and range data for docking. Further study of the docking targets and their characteristics is required before a definitized docking sensor can be established.

Attitude alignment and orbit emphemeris data is obtained from the optical and IR trackers. Accurate attitude information for inertial system alignment is obtained by tracking stars with the optical sensor. Earth edge tracking is provided by the IR sensor for navigational usage. The IR tracking head and the optical tracking head are integrated into a single gimballed assembly.

Retrograde attitude and time are determined by the central management computer. Energy management guidance during the entry phase is determined by the central management computer on the basis of navigational data provided by the inertial sensors. Attitude control is obtained by reaction jets, control surfaces or a blending of both. The cruise and landing phase is similar to the booster cruise and landing phase. In this phase, air data sensors and area navigational aids again are used to enhance the navigational accuracy. Landing can be either automatic or manual.

The booster G, N & C equipment is identical to the orbiter equipment except that the equipment required only by the orbiter is not used.

7.5.3 System Evaluation and Trade-offs

Automatic Landing - A review of automatic landing systems was made to evaluate their applicability to the Space Shuttle landing requirements. Figure 7.5-2 summarizes the general characteristics of leading concepts applicable to the Space Shuttle needs.

LANDING SYSTEM SURVEY

DESIGNATION	ACTUAL NAME	PRESENT USE	OPERATION	REMARKS
ILS	Instrument Landing System	Used at most commercial airports, some aircraft and facilities certified for Category II operation.	VHF Beam guides aircraft on approach from about 10 miles out. Can automatically land properly equipped aircraft. Uses localizer beam for roll out guidance. Performance is a function of beam quality and steering laws.	Usable for powered final approach and landing.
AILS	Advanced Instrument Landing System	In development flight test. Evaluated by FAA.	Same as ILS except more accurate. Beam quality excellent. Ground display available.	Usable for powered final approach and landing.
AN/SPN-42	Automatic Control and Landing System	Capable of landing carrier based aircraft under zero-zero conditions, but lack of redundancy restricts bad weather operation to 200 ft. ceilings and 0.5 mile visibility. No flare, accommodates two aircraft simultaneously. 5 NM range capability. No roll out guidance.	Uses ship based precision tracking radar & guidance computer - up data link supplies data to aircraft.	Flare and roll out guidance need to be developed.

Figure 7.5-2

ILS (Instrument Landing System) is a term applied to an electronic system that is used at many large airports to provide a pilot with landing glide slope and runway centerline localizer signals. Many manufacturers supply the hardware for both the ground and airborne installations.

The ground glide path transmitter is located about 1000 feet down the rollout path from the start of the runway, and 400 feet to the side of the runway centerline. This system is generally applied to 10,000 foot runways and is used in conjunction with a localizer beacon (located 1000 feet behind the rollout end of the runway and on the runway centerline extension) and two "markers." The outer marker is located 4 miles from the start of the runway, and the middle marker is located 3500 feet from the start of the runway. (The inner marker at the start of the runway has been eliminated from recent systems.) The system transmits continuous (glide slope) information on the range of 329.3 to 335 MHz by modulating the transmission at 90 Hz and 150 Hz. The nominal glide slope is 2.5° to 3° and any deviation from the nominal slope causes the airborne equipment to receive either a 90 Hz or 150 Hz signal. This signal causes the airborne crosspointer display to show the deviation as a "fly-up" or "fly-down" error command or may be connected to an automatic control loop. Airborne acquisition of the ground transmitted guidance signal is 10 NM minimum for the localizer. Glideslope range is some 4-6 NM. The system has been in existence for many years, is well proven, and has seen many improvements and refinements, however the transmitted signal is subject to many errors. Since the system uses the 1 and 3 meter bands and Earth loaded antennas, the signal is topographically affected. The ILS at LaGuardia airport in New York is affected by the rise and fall of the tide. The hills surrounding the airport at Pittsburgh cause similar problems with ILS accuracy. Other A/C in the vicinity, particularly if they should cross the ILS beam, cause the received signal and its accuracy to degrade significantly. Additionally, due to the placement of the ground antenna, the transmitted signal is not readily usable below 100 to 200 feet.

AILS refers to "Advanced Integrated Landing System." The system is built by Airborne Instrument Laboratories for the FAA. It is a new system which was at NAFEC in Atlantic City in February 1966 for evaluation. It is an evolutionary development from the former Flarescan equipment also built by AIL.

AILS automatically combines the features of ILS and GCA, providing guidance information through flare to TD to the A/C and providing a much improved precision approach radar (PAR) function to the ground operator. The system combines two ground based antenna scanning arrays, one for elevation (glideslope), and the

other for azimuth (localizer). The evaluation antenna is located 1500 feet down the rollout path of the runway from the nominal TD point, has a beamwidth of 20° horizontal, and provides usable guidance to within 300 feet of its location. The localizer antenna has a beamwidth of 1/2° (half-power point) and gives $(\text{cosecant})^2$ coverage up to 10° with sharp cutoff in the bottom side. The localizer also serves as the transponder for the DME and is located at the rollout end of the runway. The system operates in the K_u-band (15.4 - 15.7 GHz) with circular polarization.

The localizer antenna oscillates at a very accurate rate of 5 Hz through a "torque-tube" arrangement which, like a tuning fork, oscillates at its natural frequency. Since two antennas are used and accurate synchronization is required, the elevation antenna "nodding" frequency is slaved to the azimuth antenna and is adjusted by a servo-driven mass to assure synchronization.

The elevation angle, localizer, and DME information are coded by the spacing between the two pulses making up a pulsed pair. The spacing between consecutive pairs of pulses is coded to give the glideslope angle or azimuth angle. For elevation guidance, a 40 microsecond pulse-pair spacing corresponds to zero degrees of glideslope (parallel to the ground). The pulse pair spacing increases 8 microseconds per elevation degree, up to 10°, the maximum glideslope given. To assure airborne determination that the information is elevation guidance, the spacing between the pulses making up a pulse-pair is 12 microseconds.

For azimuth guidance, a 40 microsecond pulse-pair spacing corresponds to an azimuth location parallel to the runway centerline. The pulse-pair spacing increases by 8 microseconds per azimuth degree of deviation to the left or right of runway centerline, up to a maximum of ±5°, the maximum azimuth guidance given. To assure airborne unambiguous determination of the azimuth guidance information, a 14 microsecond spacing between the pulses of a pulse-pair corresponds to a fly-right command and 10 microseconds corresponds to fly-left. When DME information is transmitted, the spacing between the pulses of a pulse-pair is 8 microseconds.

Figure 7.5-3 depicts the azimuth and elevation antenna scanning, showing that only the central 10° of total travel is used for transmissions. This central 10° is the linear portion of the antenna total travel of 22°.

Unlike Flarescan, which transmitted guidance information on both the up and down scan of the elevation antenna and on both the left and right scan of the azimuth antenna, AILS transmits guidance information during only one scan of each antenna. Figure 7.5-4 depicts this operation. Elevation guidance information

LOCALIZER AND ELEVATION ANTENNA PATTERNS AND OPERATION

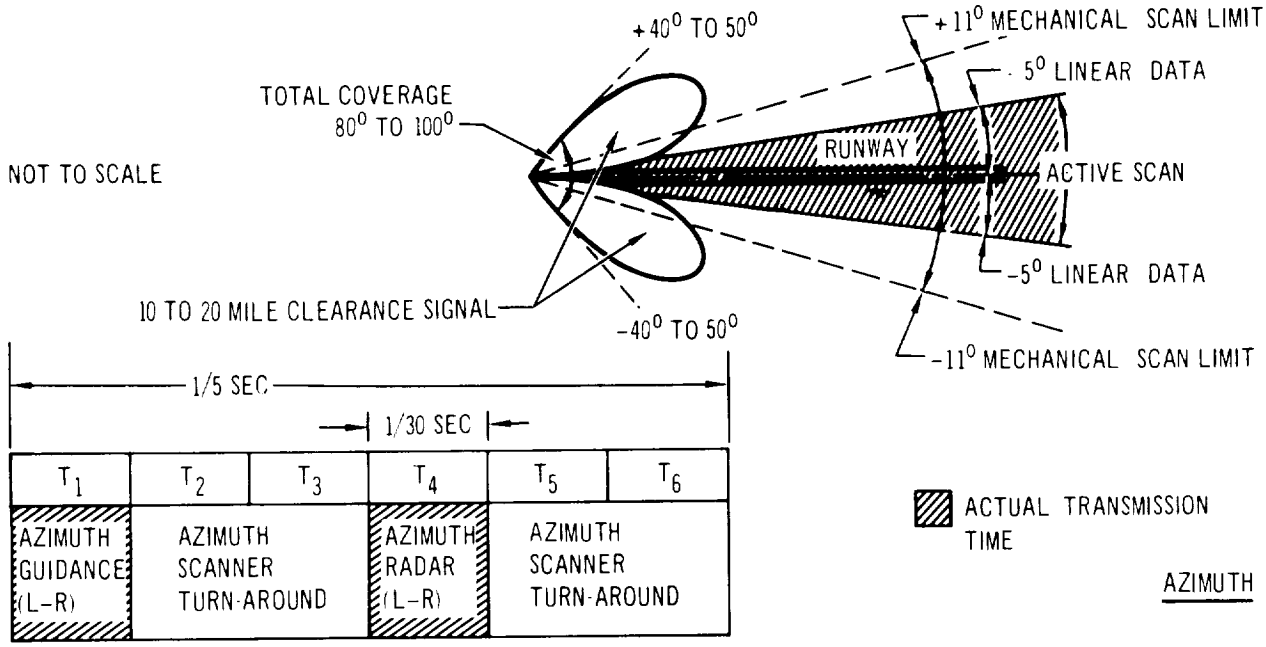

SEQUENTIAL TIME-SHARED TRANSMISSION IN AILS FOR LOCALIZER AND **GLIDE SLOPE ANTENNAS.** EACH COMPLETE CYCLE IS DIVIDED INTO SIX TIME SLOTS OF 1/30TH SEC. DURATION. DURING THIRD SLOT (T_3), VERTICALLY SCANNING ANTENNA TRANSMITS VERTICAL GUIDANCE DATA AS IT SCANS DOWN. DURING T_6 IT OPERATES AS AN ELEVATION RADAR DURING ANTENNA **UPSWING** SIMILARLY, AZIMUTH ANTENNA TRANSMITS GUIDANCE DURING T_1 AND SERVES AS AZIMUTH RADAR DURING T_4. TIME SLOT T_2 IS USED FOR DISTANCE INTERROGATION AND SLOT T_5 MAY BE USED ALSO FOR DME OR AN ADDITIONAL VERTICAL SCANNER. CLEARANCE SIGNAL IS TRANSMITTED AT START AND END OF T_1 SLOTS TO PROVIDE TURN LEFT/RIGHTSIGNAL TO AIRCRAFT OUTSIDE MAIN BEAM

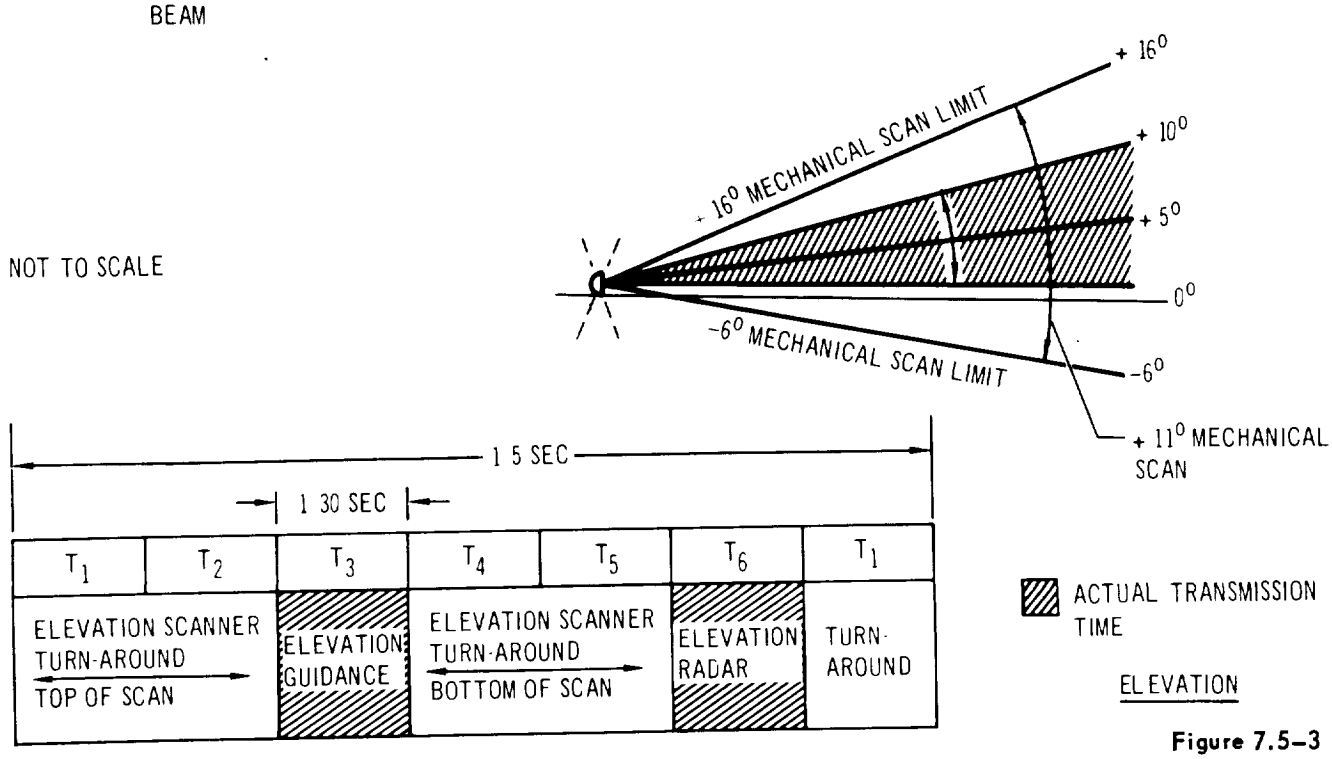

Figure 7.5–3

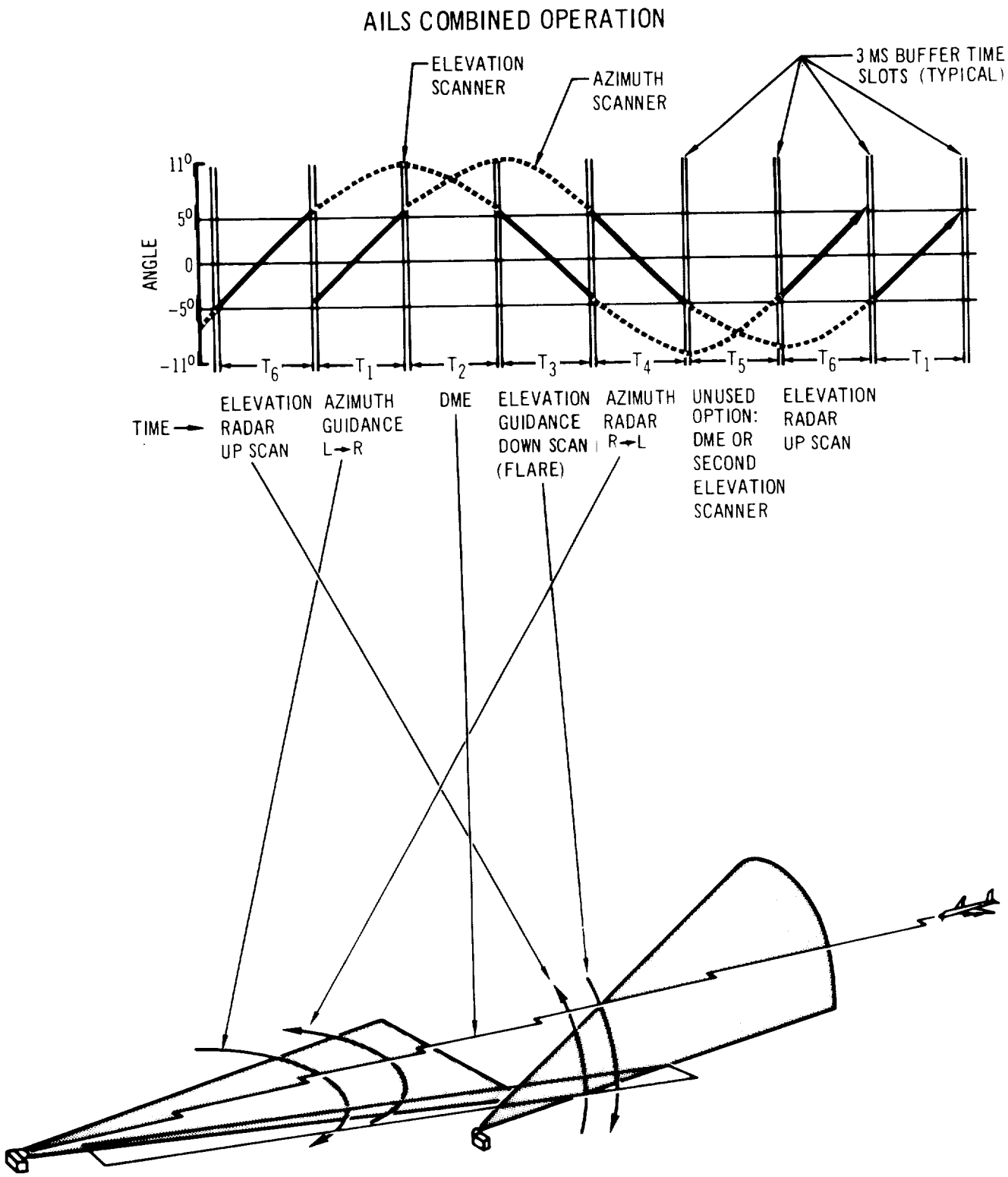
AILS COMBINED OPERATION
ELEVATION SCANNER
AZIMUTH SCANNER
3 MS BUFFER TIME SLOTS (TYPICAL)
ANGLE
11°
5°
0
-5°
-11°
T6
T1
T2
T3
T4
T5
T6
T1
TIME
ELEVATION RADAR UP SCAN
AZIMUTH GUIDANCE L→R
DME
ELEVATION GUIDANCE DOWN SCAN (FLARE)
AZIMUTH RADAR R→L
UNUSED OPTION: DME OR SECOND ELEVATION SCANNER
ELEVATION RADAR UP SCAN

Figure 7.5-4

is transmitted only during the down scan (T_3) and azimuth guidance information is transmitted only during the left-to-right scan (T_1). During the azimuth right-to-left scan (T_4) and the elevation up scan (T_6), the system performs precision approach radar (PAR) operation. This PAR information is presented to a ground controller so he can keep track of the approaching A/C. Several A/C can thus be under simultaneous approach and the ground controller can differentiate between them while the pilots fly each of the A/C based upon received guidance and range information. The ground controller would still have to identify to the A/C their respective approach spacing. The DME information is furnished to the ground controller also, even after TD, thus providing the ground controller knowledge when the runway is clear for another A/C to land. The DME system time delay is adjusted to provide "zero range" readout at a point on the runway opposite the glideslope antenna.

The approaching aircraft pilot can choose from a variety of glideslope angles, always knowing what glideslope he is following. The cockpit display is the conventional ILS crosspointer and DME range readout. The airborne units, besides incorporating a receiver, angle and distance decoders, and the necessary readout coupler circuitry, also includes a computer for flare and control. The computer can be programmed to command progressively shallower angle of attack to the autopilot pitch channel. Since this concept is similar to ILS, little to no pilot retraining is required with this system for manual landing.

The SPN-42 is manufactured by Bell Aerosystems for the Navy. The concept is a well-proven, fleet-operational, carrier-based, automatic landing system. It supersedes the AN/SPN-10.

The system consists of a precision dual tracking radar, shipboard computer, data link to and from the A/C, and the A/C autopilot and autothrottle. Three methods of landing are available; GCA (talkdown), semi-automatic (cross-pointer display, pilot nulls errors and manually lands the A/C), and fully automatic. Automatic acquisition is at 4 NM range, although this may be manually increased to 8 NM. At 4 miles, the acquisition window is 11,000 wide by 700 feet high (120° x 2°), about 1200 feet deep, and is searched every 3 seconds by the carrier radar. Landing accuracy is $\pm$ 10 feet lateral and $\pm$ 40 feet longitudinal. The landing A/C is flown along a constant glide slope (3.5° to 4°) down to TD, without any flare.

The carrier-based equipment consists of a tracking and navigational computer, radar, signal data converter, ship motion monitor, UHF data link, control consoles, monitor displays, and associated power supplies.

The deck motion compensator measures the deck "heave" and for the last 12 seconds of the landing sequence, the A/C flight path is commanded to follow the deck motion. Landing sequence (automatic) is as follows: prior to 4 NM, the A/C is picked up by the AN/USQ-20 radar and the computer tells the SPN-42 the A/C type, range, correct altitude for acquisition gate, and time-to-go till the A/C reaches the acquisition gate. During this time, the pilot engages the auto-pilot coupler. At about 4 NM, the SPN-42 radar locks onto the A/C and transmits a lock-on discrete to the A/C. The pilot acknowledges lock-on and transmits a "pilot-ready" discrete. SPN-42 equipment then starts sending commands at 10 per second until TD or waveoff.

The airborne equipment consists of a radar signal augmentor, high speed data link, autopilot, autopilot coupler, displays, and UHF voice and data communication link.

The accuracy of the ILS is not adequate under adverse conditions and only marginally acceptable under ideal conditions. The AILS and SPN-42 possess the basic accuracy for the landing phase of the space shuttle. The SPN-42 has proven successful for many shipboard landings. The AILS has been flight tested by the FAA and was found acceptable for automatic landing. FAA Report RD 68-2 describes the results of the flight test evaluation. It is expected that the FAA will certify an all weather automatic landing system by the mid-1970's. A system similar to AILS probably will be selected. Provided a system is selected in a time scale compatible with space shuttle development.

7.5.4 Conclusion and Recommandation - The space shuttle guidance, navigation and control, system implementation are in consonance with a technology capability of 1972. Detailed studies and special emphasis development are required to fulfill the operational objectives of the space shuttle program. Items of particular significance to the G, N, & C system are: flexibility in use, flexibility for growth, autonomous operation, a high level of on-board failure detection capability, and an efficient data management and crew participation concept. Study recommendations are described below.

Inertial Sensors - Past space programs have used gimballed platforms as the source of highly accurate navigation and attitude data. Development of strapdown IMU's show promise of attaining accuracy comparable to gimballed IMU's. The

mechanical complexity of the platform gimbals, torque motors and slippings, is replaced by more reliable electronic computers in the strapdown configuration. A concept wherein strapdown gyro and accelerometers are aligned normal to the six faces of a regular dodecahedron is being developed. This concept provides a significant improvement in reliability over competing concepts which utilize redundant orthoganally mounted sensors. It is particularly applicable to the space shuttle or any program where multiple redundancy is used.

Extensive testing and in some cases trend analysis is performed to determine satisfactory performance prior to flight. On-board checkout does not lend itself well to this detailed a test. A detailed study should be made to determine:

- Equipment tolerances attainable on an operational basis
- Penalties due to accuracy tolerances of concepts evaluated
- Checkout concept which provide fault detection levels compatible with the space shuttle requirements.
- Test and development required, if any, to utilize the most promising concept for the space shuttle.

Rendezvous - An optical tracking device was developed as an alternate means of obtaining rendezvous data for the Apollo program. Test and analysis of this concept showed that angular tracking data could be provided for a cooperative target at ranges up to 400 miles. Range information was obtained through use of a UHF transponder. Sunlit passive targets could be tracked at comparable ranges. Algorithms have been developed which permit rendezvous from angular data alone. To use a radar for rendezvous with a passive satellite at 400 miles requires an excessive amount of power. Studies are required to determine the spread of rendezvous requirements, and the penalties associated with optical devices that can track only a sunlit target. In addition, IR tracking on the dark side of the Earth should be considered.

Docking - A docking concept applicable to the space shuttle has not been developed on other programs. Docking characteristics unique to the shuttle are: large sized vehicles, low closing rates to achieve soft docking, and the need for all attitude information A study should be made to definitize the docking sensor configuration. This study would include:

- Definition of docking target characteristics such as size, angular rates, docking adapter configuration, and permissable closing rates.
- Establishment of performance parameters based on shuttle maneuverability and attitude control capability.

- o Evaluation of sensor concepts.
- o Determination of sensor locations on the shuttle and target.
- o Establishment of a docking sensor development program.

7.6 Telecommunications Subsystems - The telecommunications subsystem includes voice, data transmission and reception, TV, and flight recording equipment.

7.6.1 Requirements - The shuttle system requires a flexible telecommunication design capable of providing a variety of links to other space vehicles and ground bases. Because of the autonomous operation the data bandwidth needed is that required for voice or low data rate transmission. Nearly continuous communications capability is desired and contributes to improvement in safety, crew morale, mission reliability and permits real time control of unmanned spacecraft. Figure 7.6-1 shows a detailed listing of the telecommunication system functional requirements by mission phase. The system implementation to meet these requirements is covered

TELECOMMUNICATION REQUIREMENTS

REQUIREMENTS	MISSION PHASE		
	LAUNCH	IN ORBIT	LANDING/CRUISE
One direct full duplex voice channel between the shuttle and ground	(O-B)	(O)	(O-B)
One relay full duplex voice channel between the shuttle and ground		(O)	
One direct full duplex voice channel between the shuttle and other space vehicles or between the shuttle and other airborne vehicles	(O-B)	(O)	(O-B)
One direct emergency EVA duplex voice channel		(O)	
Data link for routine status reporting to ground or space station (3 KHz information bandwidth)		(O)	
Data link for receipt of commands or maintenance data from ground or space station (3 KHz information bandwidth)	(O-B)	(O)	(O-B)
Record critical flight parameters	(O-B)	(O)	(O-B)
Voice intercom	(O)	(O)	(O)
Emergency recovery aid	(O-B)	(O)	(O-B)
Visual monitor of docking		(O)	

Notes: O - Orbiter
B - Booster
Booster is assumed to be manned in this requirement list

Figure 7.6-1

in the next section. Often one system can be used to meet several system requirements. This is desired to minimize telecommunication system complexity. The telecommunications RF link requirements are summarized in Figure 7.6-2.

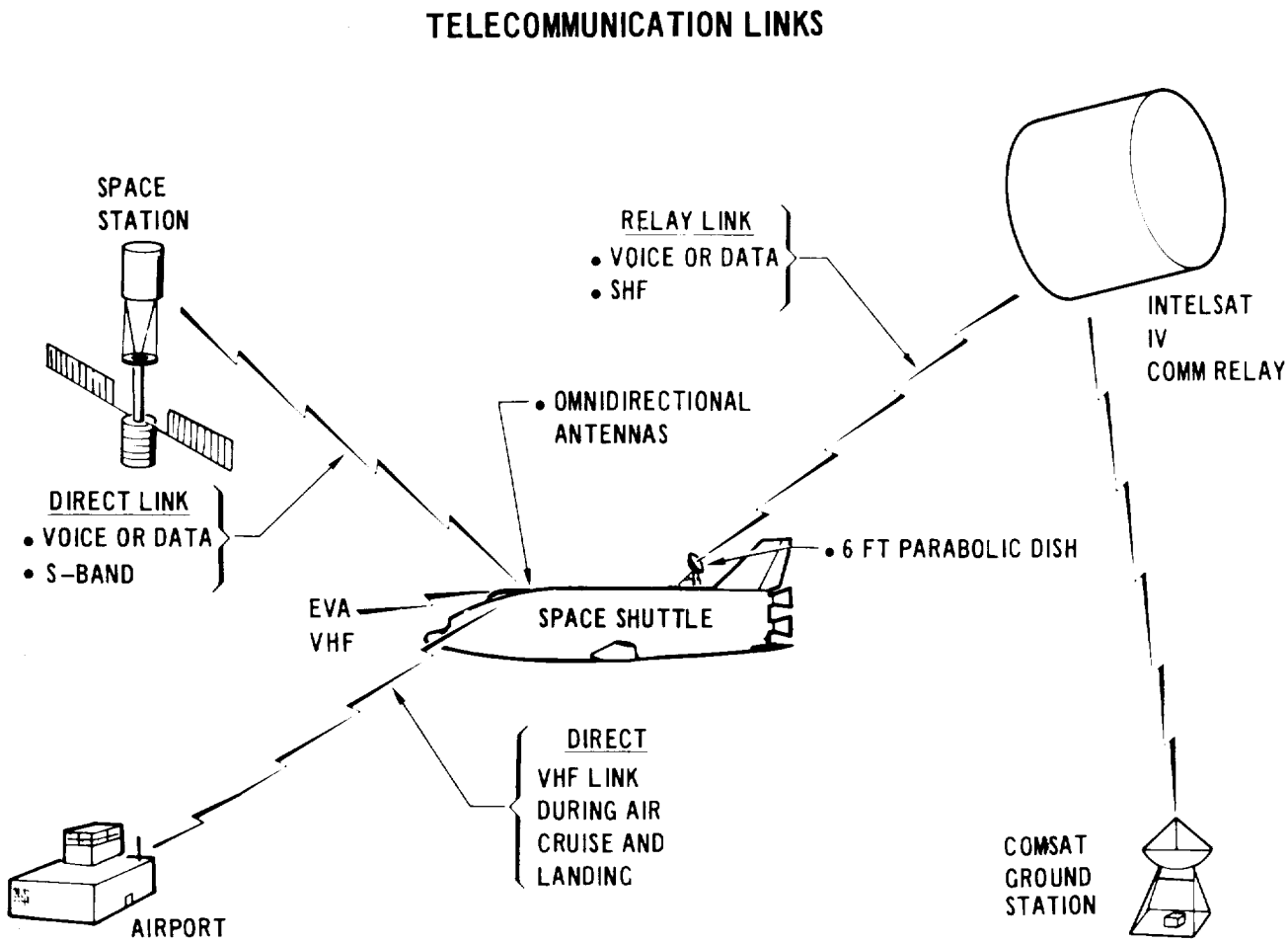

Figure 7.6-2

7.6.2 System Description - The baseline includes two types of communications systems. One operates in the SHF band and is compatible with the Intelsat IV communications relay satellite system to minimize need for ground stations. The second type provides direct communications with the space station, astronauts on emergency EVA, and the airports during landing.

Relay Communications - The relay communications link will provide communications capability virtually 100% of the time spent in orbit. This is an improvement over the Manned Space Flight Network ground stations that provides coverage only 10 to 25% of the time depending on orbit inclination. In addition, the relay satellite means of ground communications provides economical operation by deleting the need for the many ground stations now used for manned space flights.

For the baseline system it is assumed that an Intesat IV relay satellite will be used. This assumption was made because of potential economic advantages in using existing general purpose relay satellite systems rather than launching a dedicated relay satellite system for space shuttle use. Intelsat IV is currently being developed by the Communications Satellite Corporation, for operation in the early 1970's. Study has indicated that use of Intelsat IV is feasible but its use imposes stringent requirements on the shuttle communication system design. For example, a high gain (35 db) antenna (6 ft. parabolic dish) with a low noise system (350°K) receiver is required for an information bandwidth of 3KHz. Figure 7.6-3 shows a signal to noise ratio margin analysis for the Intelsat IV to shuttle link. This is the critical link since the Intelsat IV effective radiated power is limited by fixed antenna beamwidth (global coverage required) and low transmitter RF power output (6.3 watts). Normally, the Intelsat IV is operated with a ground station having a low noise receiver system (40°K) and a 90 foot or greater diameter antenna (gain >59 db). This points out the disadvantage under which the shuttle craft is operating when using the Intelsat IV system. The low data rate requirement allows the shuttle to get by with a 6 foot diameter dish which is still a significant

SHF COMMUNICATIONS RELAY LINK

	COMMUNICATIONS RELAY INTELSAT IV - 4 GHz
Transmitted Power Relay Transmitter Losses Transmitter Antenna Gain	48.2 dbm*
Free Space Loss (23,000 n.mi.)	-197.0 db
Miscellaneous Losses	-1.0 db
Shuttle Antenna Gain	+35 db (6 ft. dish)
Received Circuit Losses	-4.5 db
Received Signal Power	-119.3 dbm
Noise Spectral Density (KT)	-175 dbm**
Noise Bandwidth 30 KHz	44.8 db
Received Noise Power	-130.2 dbm
Received Signal to Noise Ratio	+10.9 db
Signal to Noise Ratio Required	9.0 db***
Signal to Noise Ratio Margin at Shuttle	1.9 db

* Assumes 3.8 db reduction in total RF power output to allow for suppression of weaker carrier when two carriers are relayed by the same relay transponder.

** Assumes 230°K system noise temperature. An uncooled parametric amplifier is required.

*** Sufficient signal to noise ratio to exceed threshold in FM/FM system.

Figure 7.6-3

The pros and cons of Intelsat IV and a new UHF-SHF relay are summarized in Figure 7.6-4. For this study an Intelsat IV is used as baseline. However, use of a new dedicated UHF-SHF relay would permit flush mounted omnidirectional antennas on the shuttle. This is feasible because there is less free space loss at UHF than at SHF.

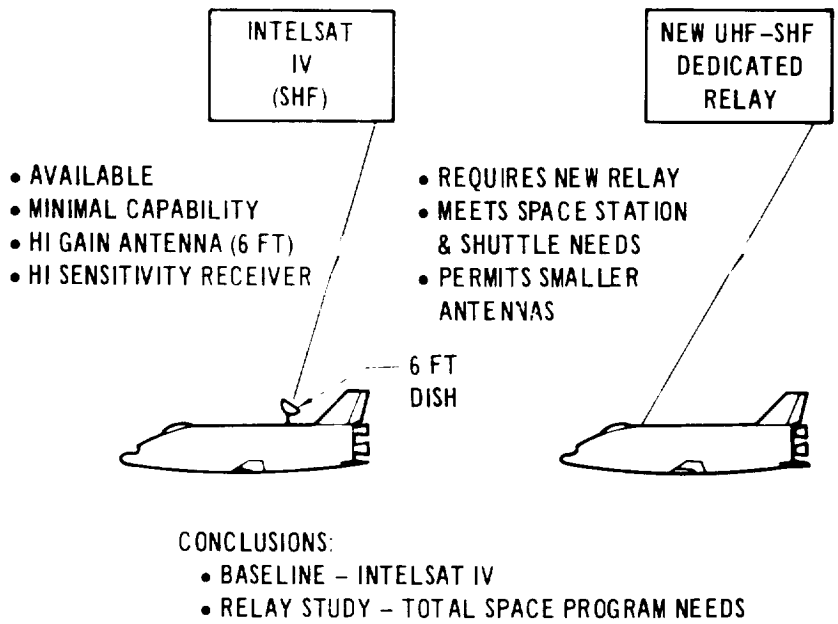

Figure 7.6-4

Direct Communications - The direct communication links provide voice/data transmission between the shuttle and space station, between the shuttle and the airport, and between the shuttle and the astronauts on emergency EVA. It is desirable to use the same type of transceivers for all of these functions to simplify the communications system. For example, a UHF system operating in the aeronautical UHF region (225 to 399.95 MHz) could satisfy all of the direct link requirements (multifunctional) provided permission for use of the frequency band is obtained. For example, airports handling military aircraft have transceivers operating in this frequency band and Apollo currently uses the frequencies of 296.8 and 259.7 MHz for intervehicle and EVA voice/data communications. An alternate approach, shown in Figure 7.6-2 uses S-band for intervehicle communications, 296.8 and 259.7 MHz for EVA, and the commercial VHF band for airport communications. With this approach three separate antenna systems are required. However, it is possible to use a common transceiver for three frequency bands.

For example: one transmitter frequency multiplier chain is used, with individual taps for each frequency of operation. Received signals would be routed to the appropriate intermediate frequency (IF) stage in the receiver. S-band signals would pass through the entire receiver while VHF signals would be routed to the last IF stage only. Further study is required to determine the desirability of this approach.

The final decision for direct link equipment must be based on the entire operational environment including space station and space experiment telecommunication requirements. For example, experiment carriers operating in conjunction with the space station may require an S-band system for transmission of high rate experiment data to the space station. A multichannel S-band transceiver on the space station could therefore also be used for communications with the shuttle.

The multifunctional system would use a multichannel transceiver and omnidirectional antennas. Any of the 3500 channels in the 225 to 399.95 MHz band can be selected; however, several commonly used channels would be preset for ease of selecting these channels. Channel tuning is done electronically. RF power output of 20 to 100 watts is achieved by all solid state circuitry. The antenna system includes automatic antenna switches and flush mounted omnidirectional antennas. High temperature, flush mount, broadband annular slot antennas are used. Antenna switching is required to select the antenna that maximizes the received signal. If required, two transceivers can be operated simultaneously at 2 different sets of operating frequencies. Antenna switches are then used to connect both transceivers to a common antenna or to connect the two transceivers to different antennas. That is, each transceiver is connected to an antenna that will provide an adequate received signal level.

Antennas - Figures 7.6-5 summarizes the antenna requirements/selection for all spacecraft systems. A common UHF transceiver system is assumed for each of the direct link functions. Figures 7.6-6 through 7.6-9 show alternate approaches and installations for the relay communications antenna. The relay antenna is sized to work with the Intelsat IV commercial satellite relay system. For each installation both the stowed and deployed positions are shown. The antenna is deployed by a hydraulic or motor drive actuator in a supporting actuating cylinder. The actuating cylinder rotates to provide 360 degrees of azimuth coverage. A second rotating joint is required to provide coverage in the elevation plane. By locating this rotating joint on the actuator arm (several feet from the antenna/actuator arm attack point) the over the side coverage is greatly improved. Moving the antenna

ANTENNA SYSTEM REQUIREMENTS/SELECTION

ELECTRONIC SYSTEM	MINIMUM ANTENNA COVERAGE REQUIRED	REQUIRED ANTENNAS	POLARIZATION REQUIRED	ANTENNA LOCATION	TYPE OF ANTENNA AND REMARKS
Relay Communications	Hemisphere	1 (Dual Electronics)	RHC-receive LHC-transmit	Top of fuselage or within vertical stabilizer	6 ft. parabolic dish. 3.7 to 4.26 GHz receive. 5.925 to 6.425 GHz transmit. Deploy and use only in orbit. Unfurlable if located in vertical stabilizer.
Direct Communications	Omni-directional	4 (2 per system)	Vertical	Two on top and two on bottom of fuselage	Flush mount annular slot. 225 to 400 MHz 24" x 24" x 4.2" deep.
Rendezvous Radar	60 degree solid cone angle forward of spacecraft	1 (Dual common electronics)	Linear	Top of fuselage in front of crew compartment.	Deployable parabolic dish or passive corporate feed planar array C-band
Advanced Instrument Landing System	Forward looking ±40° pitch, ±50° azimuth	3 (1 per system)	Circular	Top of crew compartment.	Open ended Ka band wave guide 15.4 to 15.7 GHz band.
Tacan	Omnidirectional in azimuth ±45° in elevation	4 (2 per system)	Vertical	One on bottom and one on top center line per system	Annular slot 8.5" dia., 2" deep 960-1220 MHz
Radar Altimeter	40 degree solid cone angle. Beam directed along local vertical	6 (2 per system)	Linear	Bottom: near fwd-aft center of gravity	Horn antenna 7" dia. 3" deep, 4.3 GHz
Recovery Beacon	Hemisphere above water or land surface	1	Vertical	Vertical Stabilizer	Antenna and transceiver thrown from spacecraft by crash, hydrostatic pressure, or pilot. 243 MHz
Air Traffic Control	Omnidirectional in azimuth ±45 degrees in elevation	2	Vertical	One on bottom and one on top center line	Annular slot 8.5" dia. 2" deep 960-1220 MHz

Figure 7.6-5

RELAY COMMUNICATIONS ANTENNA – FUSELAGE MOUNT (BASELINE CONCEPT)

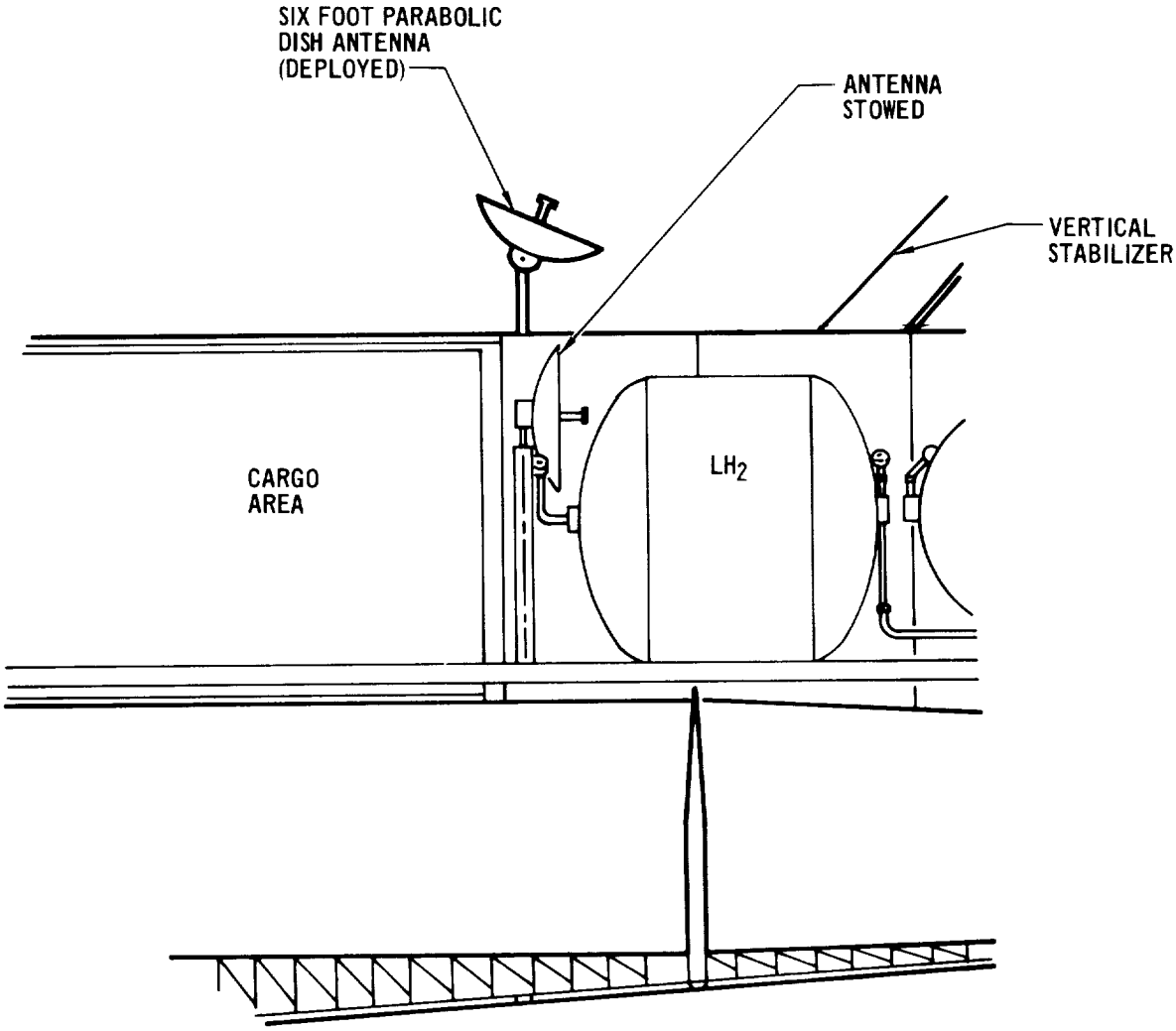

SCALE = 1/100

Figure 7.6–6

COMMUNICATIONS ANTENNA – VERTICAL STABILIZER MOUNT, 4.5 FT. SQUARE PLANAR ARRAY

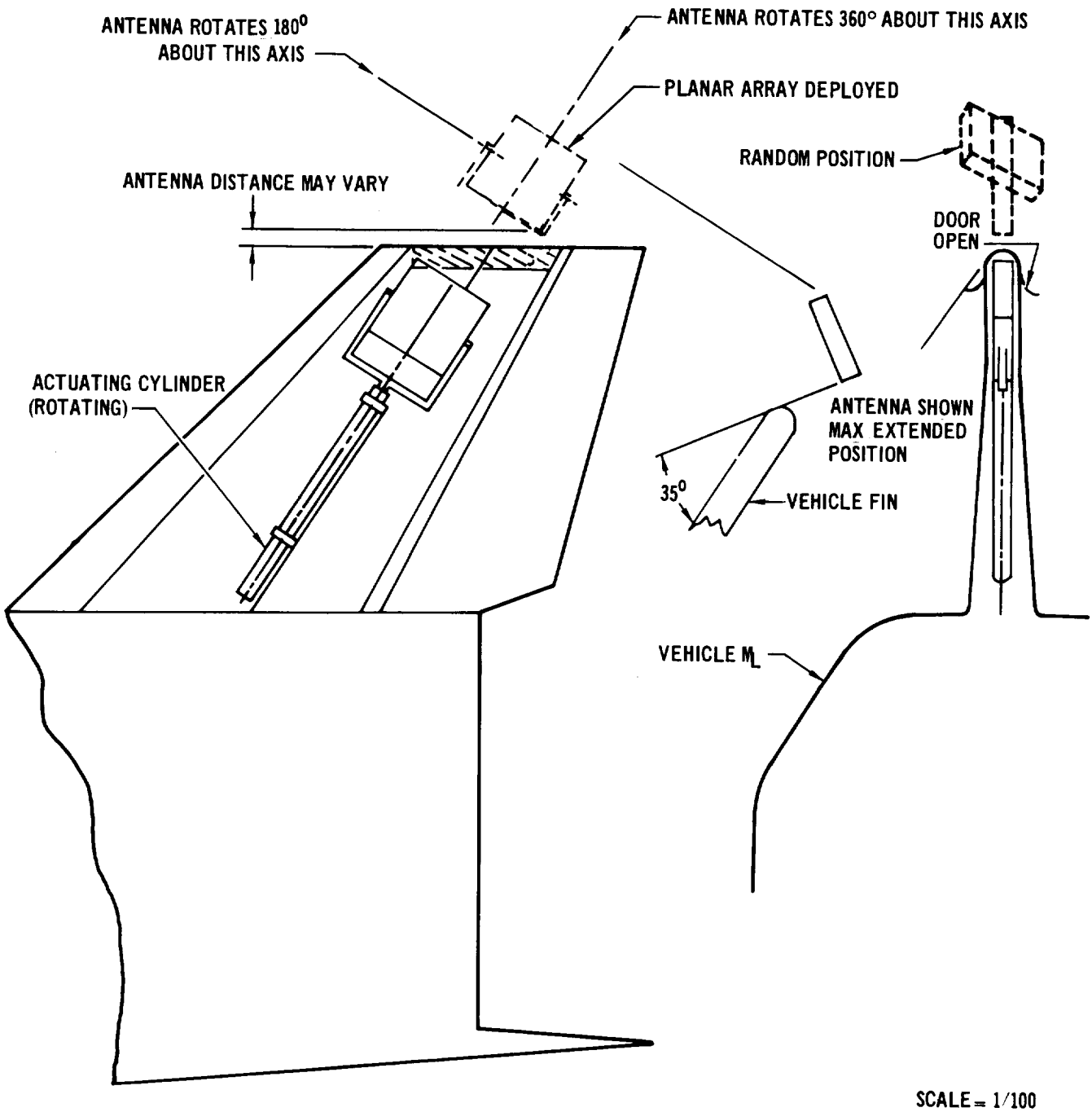

SCALE = 1/100

Figure 7.6–7

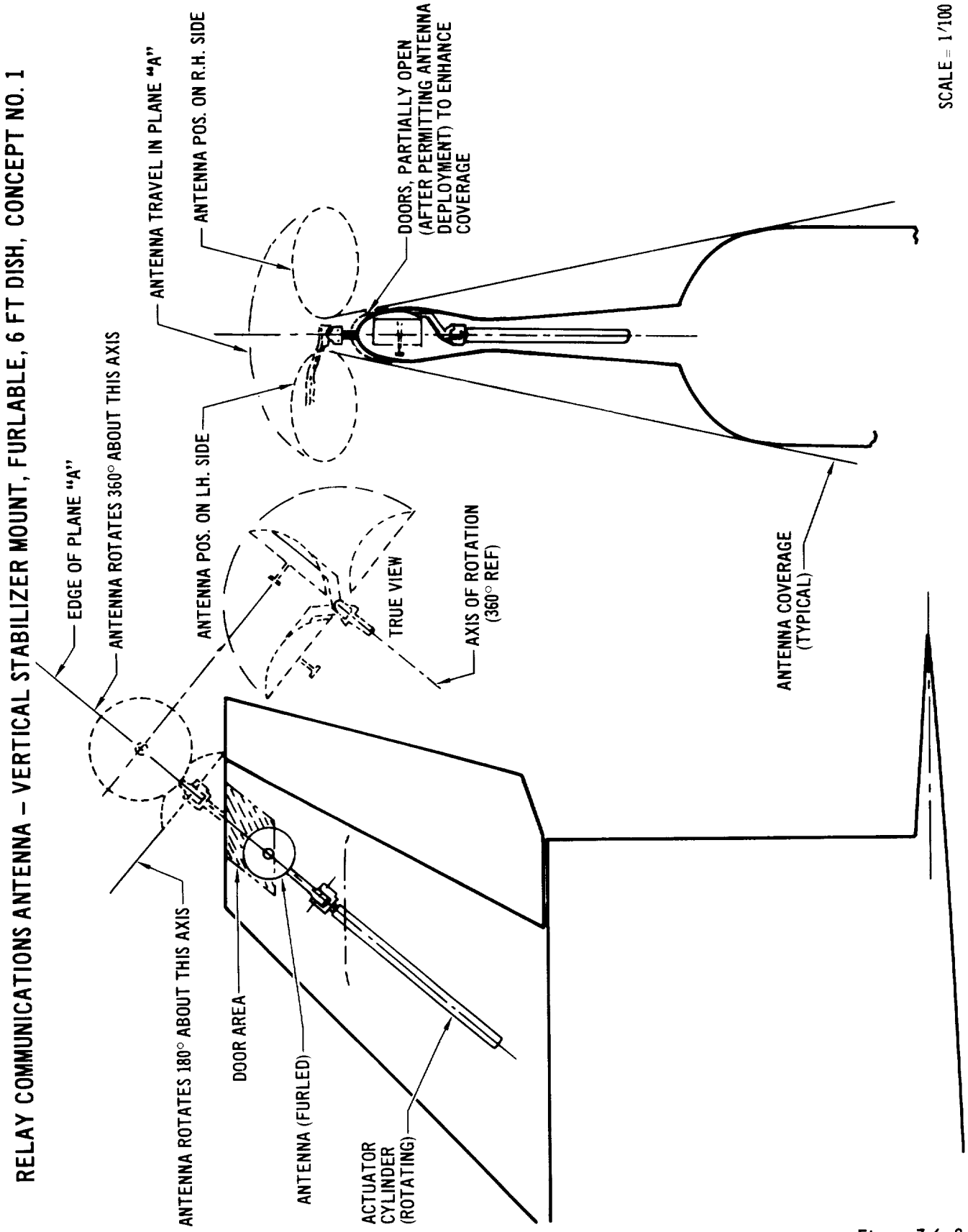
RELAY COMMUNICATIONS ANTENNA – VERTICAL STABILIZER MOUNT, FURLABLE, 6 FT DISH, CONCEPT NO. 1
SCALE = 1/100
ANTENNA TRAVEL IN PLANE "A"
ANTENNA POS. ON R.H. SIDE
DOORS, PARTIALLY OPEN (AFTER PERMITTING ANTENNA DEPLOYMENT) TO ENHANCE COVERAGE
ANTENNA POS. ON L.H. SIDE
EDGE OF PLANE "A"
ANTENNA ROTATES 360° ABOUT THIS AXIS
TRUE VIEW
AXIS OF ROTATION (360° REF)
ANTENNA COVERAGE (TYPICAL)
ANTENNA ROTATES 180° ABOUT THIS AXIS
DOOR AREA
ANTENNA (FURLED)
ACTUATOR CYLINDER (ROTATING)

Figure 7.6–8

RELAY COMMUNICATIONS ANTENNA – VERTICAL STABILIZER MOUNT FURLABLE, 6 FT DISH, CONCEPT NO. 2

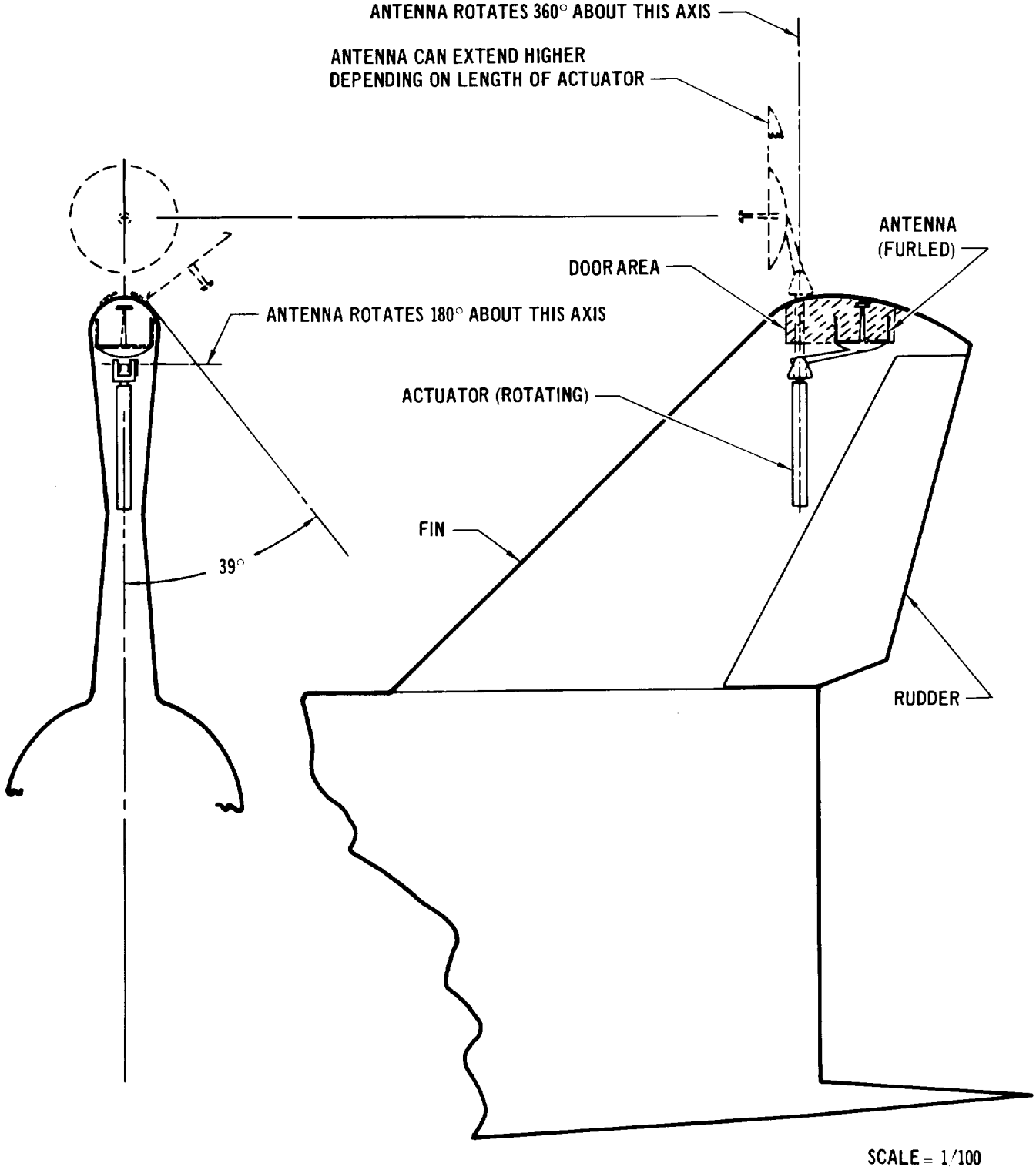

Figure 7.6–9

over the side of the vertical stabilizer eliminates signal blockage from the stabilizer. Figures 7.6-8 and 7.6-9 show this concept and the use of a furlable antenna. The antenna diameter is 36 inches when furled and 72 inches when unfurled.

Almost all work on unfurlable antenna has been done on those which must open once without the retraction capability needed for repeated use. However, techniques that allow repeated unfurling and retraction must be developed for the shuttle if an approach using an unfurlable antenna is implemented.

The planar array layout in Figure 7.6-7 is mechanically balanced about all axes of rotation. This technique results in a low drive torque (drive current) requirement. The array thickness of one foot includes the array and the electronics. This thickness could be reduced by several inches if required.

The relay communications antenna is only used in orbit and is not designed to withstand the temperatures or loads which occur during insertion, entry, or aerocruise. Further analyses of the selection and location of antennas is included in Figures 7.6-10 through 7.6.13. For all the relay antennas shown the receivers and perhaps transmitters would be installed on the antennas to minimize noise temperature and RF losses in the system.

A Voice Intercom system is used to enhance reporting to the passengers from the Earth, space station, or crew.

The Communications Processor provides for voice and data signal processing switching and routing. Included are decoding and formatting of received data, voice signal clipping, encoding of routine spacecraft status data prior to its transmission, and selection of the appropriate transceiver system.

The Flight Recorder Monitors critical flight parameters which can be used for crash investigation. The recorder is crash proof and playback of data is done at ground or space station.

Closed Circuit Television is used, as required, to visually monitor and provide an attitude reference during the docking phase. It can also provide visual accessibility to critical areas such as landing gear.

7.6.3 Alternate Concepts Evaluated - The key alternate concepts studies are listed below. Study results are summarized in Figures 7.6-10 through 7.6-15.

a. Use of aeronautical UHF versus C-band for the communication relay link.

b. Mechanical scan parabolic dish antenna versus active electronic scan phased array antenna for the Intelsat IV relay link.

c. Separate antennas for rendezvous and communications versus a single antenna system for both functions.

d. Use of a mechanical scan parabolic dish antenna versus a mechanical scan passive planar array antenna.

e. Fuselage mounted high gain antennas versus vertical stabilizer mounted high gain antennas.

f. Radar mounted in nose behind radome versus a deployable radar.

7.6.4 Conclusions and Recommendations

Technology - The following are technology developments required for the baseline design.

- o Reusable high temperature flush mounted antennas not requiring protection during launch/reentry
- o Low noise receiver system for relay communications

The following are technology developments recommended for refinements in baseline design:

- o Mechanical steerable planar array for easy mount in vertical stabilizer.
- o High temperature multiple reuse radomes for multimode radar in nose sections.
- o Multimode phased array radar.

Follow-on Study Recommended

- o Study alternate concepts, items, a, and c. through f. listed above, in greater depth.
- o Refine system requirements using a typical operational environment as a reference. Factor in preliminary space station study results and data relay system characteristics.

PARABOLIC DISH ANTENNA VS. ACTIVE ELECTRONICALLY STEERED ARRAY FOR RELAY COMMUNICATIONS

VIA INTELSAT IV

	PROS	CONS
Dish	o Low noise system practical (2.5 to 3.5 db) o Comparable systems developed and used successfully in space	o Must be deployed o Movable parts o Large stowage space required; depth ≃ diameter/2
Array	o No deployment required o Flush mount	o System noise temperatures 8-10 db o Each array limited to 120 degree solid cone scan angle o Gain decreases with scan off boresight (-3 db at +60°) o Array exposed to launch/entry heating

Conclusions: The parabolic dish is selected over active arrays because four active arrays are required to obtain spatial coverage equivalent to that obtainable with the dish. Aperture of each array needs to be 113 to 195 sq. ft. to obtain receive performance equivalent to a system with a 6 foot dish and a 3.5 db noise figure. Installation of four arrays with correct orientation (e.g. to achieve good forward coverage) is not practical. Weight of the array systems (4) is estimated at 1600 pounds vs. 100 pounds for the dish system.

Figure 7.6-10

SEPARATE VS. COMMON ANTENNAS FOR COMMUNICATIONS AND RENDEZVOUS TRACKING

ANTENNA TYPE	PROS	CONS
Common	o One antenna o One transmitter o One deployment mechanism o With single redundancy omnidirection coverage can be provided for each function	o Time sharing required: unless separate antennas and separate frequencies are used for each function
Separate	o Time sharing not required o Less complexity of each system o Hardware matches normal organization grouping	o Two deployable antennas with associated doors and deployment mechanism

Conclusions: Separate communication and radar systems were selected. Each can be located to provide good coverage without interferring with the others operation. However, a combined rendezvous and communications system using a common transmitter, a common antenna, and separate receivers was found to be feasible. The system studied used interrupted CW for the radar mode. The communications mode is compatible with Intelsat IV.

Figure 7.6-11

USE OF A MECHANICAL SCAN PARABOLIC DISH ANTENNA VERSUS A MECHANICAL SCAN PASSIVE PLANAR ARRAY ANTENNA

ANTENNA	PROS	CONS
Dish	o More consistent with standard practices o Minimum development	o Depth ∿ diameter/2 o Furl antenna to install in vertical stabilizer
Planar Array	o < 6 inch depth o Can mount in vertical stabilizer without furling or folding	o More development required

Conclusions: The dish antenna was selected as the baseline on the basis of minimum development. However, a passive array with a 4.5 x 4.5 foot aperture and 1300 crossed dipoles has been investigated. This array provides the same performance as a dish. It has less depth than a dish and therefore is more amenable to a vertical stabilizer installation. Hybrids and branch line couplers are used to obtain orthogonal polarization for transmit and receive. Orthogonal polarization is required by Intelsat IV.

Figure 7.6-12

FUSELAGE MOUNT VERSUS VERTICAL STABILIZER
MOUNT FOR HIGH GAIN ANTENNA

MOUNT	PROS	CONS
Top Fuselage	o Fwd mount: Close to electronics bay but shadowed by deployed cargo module. o Parabolic dish or planar array can be stowed without furling o Aft mount: Less shadowing than fwd mount. o Minimum design impact	o Less coverage over the side o Less coverage forward and below
Vertical Stabilizer	o Better over the side coverage o Better coverage forward and below	o Six foot dish requires: furling of antenna and widening of stabilizer o Both dish and planar arrays require door in stabilizer for deployment. o Remote from electronics bay.
Bottom Fuselage	o 4π steradians coverage with both bottom and top mount	o Door required in high heating area

Conclusions: A top fuselage mount behind the cargo module was selected since it provides good coverage ($>2\pi$ steradians) and has minimum spacecraft design impact. However, vertical stabilizer mounts should continue to be considered due to improved coverage capability. The installation of a mechanical steered passive array in the vertical stabilizer has advantages of fitting within the stabilizer without widening stabilizer structure.

Figure 7.6-13

UHF VS. C-BAND FOR RELAY LINK

	PROS	CONS
UHF	o Use omni antennas on shuttle o Simple shuttle systems	o Potential interference from ground radiators o Potential multipath interference o UHF satellite may not be available in shuttle time period
C-Band	o Use existing commercial relay of shuttle time period (i.e., Intelsat IV) o Dedicated relay not required	o Requires high gain (6 ft.) shuttle antenna o Requires low noise receive system on shuttle (3.5 db noise figure)

Conclusions: A C-band system was selected to be compatible with Intelsat IV. However, the aeronautical UHF band system offers simplicity of design and would allow common equipment to be used for all voice and data links. TACSAT I is an existing satellite relay that has a compatible UHF relay. However, the next generation TACSAT may not include an UHF relay. Also, the potential interference and channel available problems must be further analyzed before UHF (225 to 400 MHz) can be selected as the baseline system for the shuttle relay link.

Figure 7.6-14

RADAR MOUNTED IN NOSE VS. A DEPLOYABLE RADAR

MOUNT	PROS	CONS
Nose (behind radome)	o Radar usable in orbit and after entry o No deployment mechanism required o Minimize spurious energy at receiver o Good forward coverage	o High temperature radome development required o High temperature effects on reusable radomes must be determined
Deployable	o Minimum impact on shuttle design o Minimum technology development	o Radar usable in orbit only; unless specially designed to be deployed during aero cruise o Forward coverage proportional to length of deployment boom

Conclusions: A deployable radar located forward and on top of the spacecraft was selected as baseline since the effects of high temperature on reusable radomes are unknown. The radar is used for both cooperative and non-cooperative tracking in orbit. The use of a radar mounted behind a nose radome was also investigated. Of the radars studied, a C-band active phased array with electronic beam steering is the best suited for mounting behind the radome. The electronic steered array can be located very near to the radome thus reducing radome size. The array can produce multiple beams. Therefore a doppler navigation mode or a radar altimeter mode could be added. At C-band the array can be made small and yet take advantage of relatively high efficiency components. A 15 inch diameter array drawing 1440 watts has an estimated range of 30 nautical miles against a 5 sq. meter uncooperative target.

Figure 7.6-15

7.7 Electrical Power - The characteristics of the electrical power subsystems for both the booster and the orbiter are described in this section. The energy requirements and selected baseline power sources for the baseline vehicles are as follows:

Vehicle	Energy Required	Selected Power Source
Booster	21.5 KWH	AgO-Zn Batteries
Orbiter	805.8 KWH	H_2-O_2 Fuel Cells With Peaking/Emergency AgO-Zn Batteries

7.7.1 Electrical Power Requirements - A seven day mission was used as a baseline for the orbiter load analysis. The mission consists of 26 hours for prelaunch through ascent and initial docking, 120 hours orbital operation, and 24 hours for return, descent and landing. The orbiter load summary is shown in Figure 7.7-1. The total energy required for the mission is 805.8 KWH. The overall average main bus power is 4.74 KW, with peaks of 6.94 KW during rendezvous and docking operations. Figure 7.7-2 shows the variation in main bus average power for the various mission phases.

The baseline mission for the booster consists of 2 hours for prelaunch, 10 minutes for liftoff through jet engine start, and 2 hours for cruise through landing. The booster load summary is shown in Figure 7.7-3. The booster requires 21.5 KWH of energy to perform its mission. The average power level is 5.2 KW, with 5.83 KW peaks during cruise and landing. The variation of main bus average power with respect to booster mission phase is shown in Figure 7.7-4.

All power quantities used in the load analyses were based on a 28 VDC bus. Inversion losses were added for equipment operating on AC.

The electrical power required for operation of the main propulsion engines has not been included in the load summaries. This power (6.2 KVA @ 115V 400 Hz per engine) will be supplied by turbine driven auxialiary power units (APU). These units also provide backup hydraulic power for engine gimbal and prime hydraulic power for the aerodynamic control surface prior to turbojet operation.

7.7.2 Electrical Power Subsystem (EPS) Baseline - The baseline electrical power subsystem configurations for the orbiter and the booster are described in the following paragraphs. The main power sources for the orbiter are H_2-O_2 fuel cell modules. For the booster, rechargeable AgO-Zn batteries are used. Except for the power sources, the subsystems are essentially identical for both the orbier and booster.

ORBITER ELECTRICAL LOAD SUMMARY
(Electrical Energy in Watt Hours)

EQUIPMENT \ MISSION PHASE	PRELAUNCH 2 HOURS	ASCENT 1 HOUR	ORBITAL PHASING 20 HOURS	RENDEZVOUS & DOCKING 3 HOURS	ORBITAL OPERATIONS 120 HOURS	RETURN PHASING 22 HOURS	ENTRY & LANDING 2 HOURS
Inertial Sensors	1500	750	15,000	2,250	90,000	16,500	1,500
Computers	2,200	1,100	22,000	3,300	132,000	24,200	2,200
Flight Control Amplifiers	740	408	600	110	1,800	825	713
3-Axis Rate Gyros	90	45	900	135	5,400	990	90
Communications	525	355	5,670	1,050	32,020	4,088	635
Rendezvous Radar	--	--	--	800	5,600	--	--
Displays & Controls	2,670	1,335	27,500	4,179	163,786	30,720	2,750
Navigation Aids	--	--	800	120	4,800	880	--
Landing Aids	--	--	--	--	--	--	644
Data Handling	540	350	5,400	810	32,400	5,940	540
TV Cameras	--	--	160	80	960	175	80
EC/LS	1,218	609	12,180	1,822	36,500	13,410	1,218
Lighting	500	250	5,000	750	15,000	5,500	500
Misc. & Losses	599	312	5,713	924	31,216	6,194	652
Total Energy (W-H)	10,582	5,514	100,923	16,330	551,482	109,422	11,522
Average Power (W)	5,291	5,514	5,046	5,443	4,596	4,974	5,761

Total Energy for 7 Day Mission 805.8 KWH

Average Power for 7 Day Mission 4.74 KW

Peak Power (During Rendezvous & Docking) 6.94 KW

Figure 7.7-1

ORBITER MAIN BUS AVERAGE POWER
Total Mission Energy: 805.8 KWH

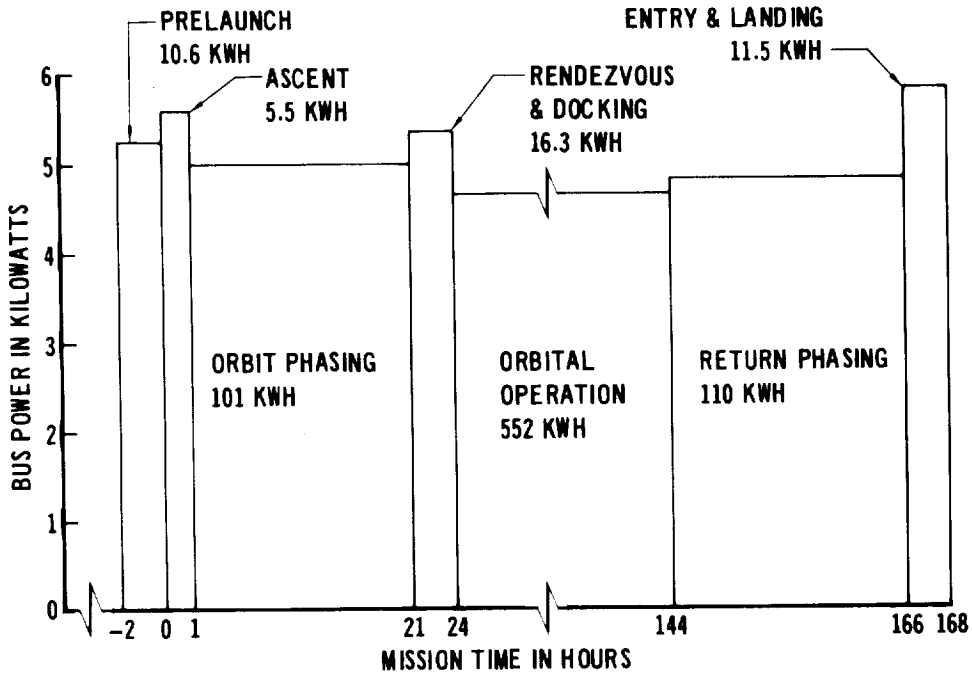

Figure 7.7-2

BOOSTER ELECTRICAL LOAD SUMMARY
(Electrical Energy in Watt-Hours)

EQUIPMENT \ MISSION PHASE	PRELAUNCH 2 HOURS	ASCENT 10 MINUTES	CRUISE & LANDING 2 HOURS
Inertial Sensors	1,500	125	1,500
Computers	2,200	183	2,200
Flight Control Amplifiers	740	62	683
3-Axis Rate Gryos	90	7	90
Communications	525	61	635
Displays & Controls	2,830	243	2,910
Landing Aids	--	--	544
Data Handling	380	32	380
TV Cameras	--	7	80
EC/LS	988	82	988
Lighting	125	11	125
Misc. & Losses	563	49	608
Total Energy	9,941 W-HR	862 W-HR	10,743 W-HR
Average Power	4,970 W	5,172 W	5,372 W

Total Mission Energy	21.5 KWH
Average Mission Power	5.2 KW
Peak Power (During Cruise and Landing)	5.83 KW

Figure 7.7-3

BOOSTER MAIN BUS AVERAGE POWER
Total Mission Energy: 21.5 KWH

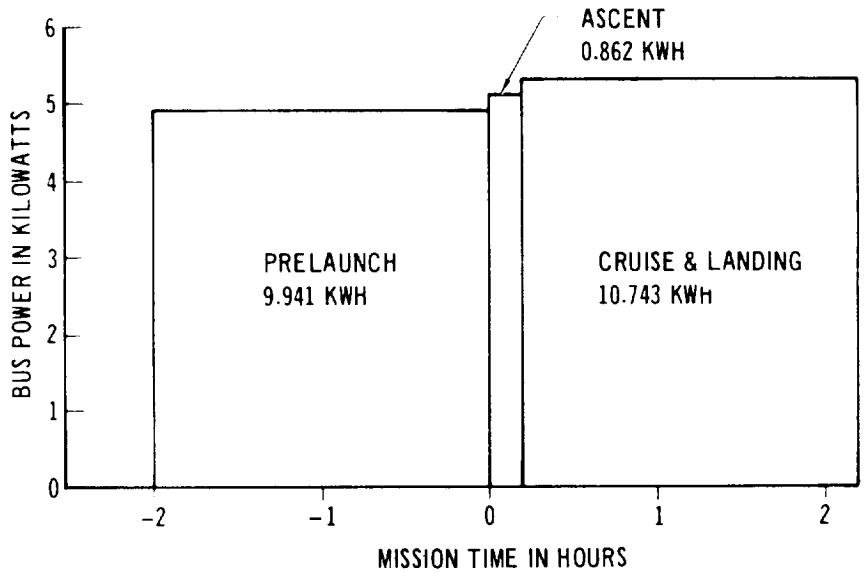

Figure 7.7-4

Figure 7.7-5 and Figures 7.7-6 show the EPS configurations for the orbiter and booster, respectively. The design philosophy used is an adaptation of that used in the design of commercial aircraft such as the DC-9 and the DC-10. The components of the EPS (for both orbiter and booster) are interconnected to form two separate power source channels. These prime source channels can be operated either independently, or in parallel. Paralleling of the DC buses is accomplished by closing the DC bus tie relay No. 3 (DCBTR3), and the AC buses can be paralleled by closing the AC bus tie relay No. 3 (ACBTR3). The inverters are timed by a common clock located in the inverter frequency reference. This common clock synchronizes the inverters so parallel operation is possible. The inverter frequency reference contains sufficient redundancy to maintain the desired system reliability.

Both the DC and the AC buses are further divided into essential and non-essential buses. Only that equipment that is absolutely essential for crew and vehicle survival is connected to the essential buses - all other equipment is connected to the non-essential buses. Although circuit protection components are not shown, unprotected circuits will be kept to an absolute minimum consistent with safety.

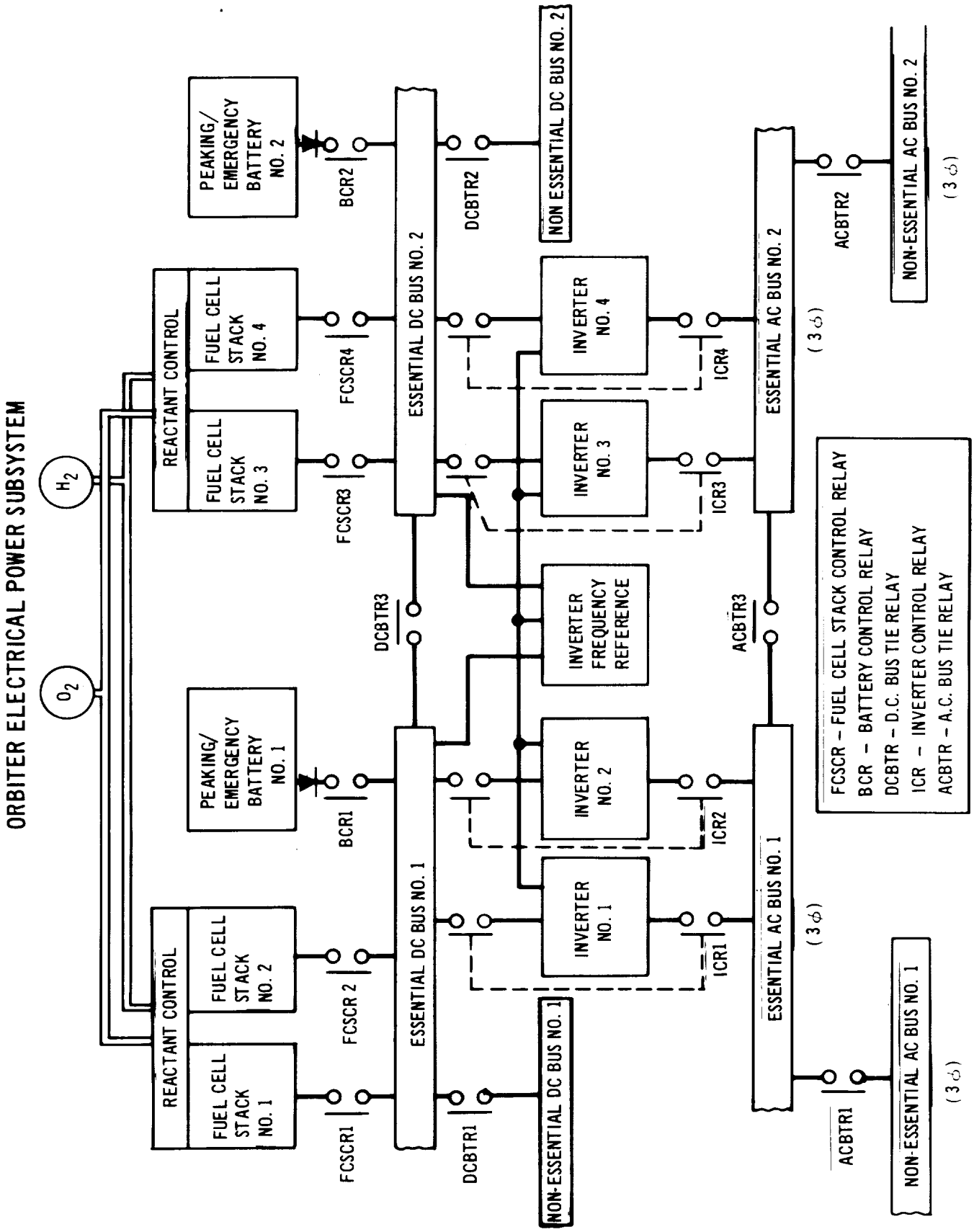
ORBITER ELECTRICAL POWER SUBSYSTEM
H_2
O_2
REACTANT CONTROL
FUEL CELL STACK NO. 1
FUEL CELL STACK NO. 2
FUEL CELL STACK NO. 3
FUEL CELL STACK NO. 4
PEAKING/ EMERGENCY BATTERY NO. 1
PEAKING/ EMERGENCY BATTERY NO. 2
FCSCR1
FCSCR 2
FCSCR3
FCSCR4
BCR1
BCR2
ESSENTIAL DC BUS NO. 1
ESSENTIAL DC BUS NO. 2
DCBTR1
DCBTR2
DCBTR3
NON-ESSENTIAL DC BUS NO. 1
NON ESSENTIAL DC BUS NO. 2
INVERTER NO. 1
INVERTER NO. 2
INVERTER NO. 3
INVERTER NO. 4
INVERTER FREQUENCY REFERENCE
ICR1
ICR2
ICR3
ICR4
ESSENTIAL AC BUS NO. 1
ESSENTIAL AC BUS NO. 2
ACBTR1
ACBTR2
ACBTR3
(3 ϕ)
NON-ESSENTIAL AC BUS NO. 1
NON-ESSENTIAL AC BUS NO. 2
FCSCR – FUEL CELL STACK CONTROL RELAY
BCR – BATTERY CONTROL RELAY
DCBTR – D.C. BUS TIE RELAY
ICR – INVERTER CONTROL RELAY
ACBTR – A.C. BUS TIE RELAY

Figure 7.7–5

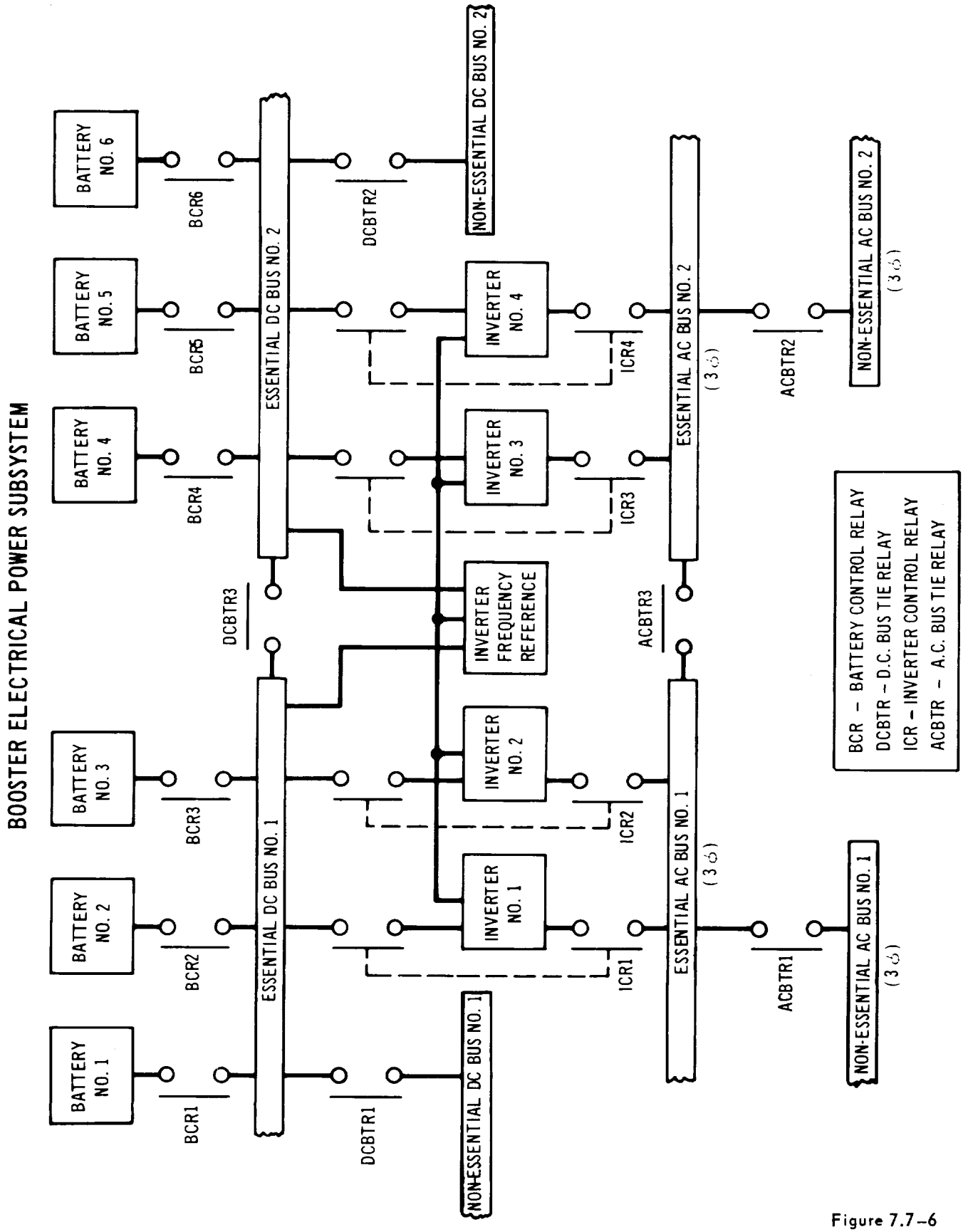
BOOSTER ELECTRICAL POWER SUBSYSTEM
BATTERY NO. 1
BATTERY NO. 2
BATTERY NO. 3
BATTERY NO. 4
BATTERY NO. 5
BATTERY NO. 6
BCR1
BCR2
BCR3
BCR4
BCR5
BCR6
ESSENTIAL DC BUS NO. 1
ESSENTIAL DC BUS NO. 2
DCBTR1
DCBTR2
DCBTR3
NON-ESSENTIAL DC BUS NO. 1
NON-ESSENTIAL DC BUS NO. 2
INVERTER NO. 1
INVERTER NO. 2
INVERTER NO. 3
INVERTER NO. 4
INVERTER FREQUENCY REFERENCE
ICR1
ICR2
ICR3
ICR4
ESSENTIAL AC BUS NO. 1
ESSENTIAL AC BUS NO. 2
(3ϕ)
ACBTR1
ACBTR2
ACBTR3
NON-ESSENTIAL AC BUS NO. 1
NON-ESSENTIAL AC BUS NO. 2
BCR – BATTERY CONTROL RELAY
DCBTR – D.C. BUS TIE RELAY
ICR – INVERTER CONTROL RELAY
ACBTR – A.C. BUS TIE RELAY

Figure 7.7-6

7.7.2.1 Orbiter Power Source - Prime power for the orbiter is supplied by four H_2-O_2 matrix type fuel cell modules. Each module is rated at 2.0 - 2.5 KW, for a total capability of 8 - 10 KW at the buses. All four fuel cell modules are operated simultaneously for reactant economy as well as continuity of power in the event of a module failure. The peaking/emergency batteries are rated at 6.0 KWH each. These serve two purposes, (1) they improve the bus transient response characteristics (the battery voltage is slightly below the nominal bus voltage), and (2) they will provide up to two hours power for emergency deorbit, entry and cruise in the event of a catastrophic failure of the fuel cell system.

The orbiter power source is sized so that a safe return is possible with two fuel cell modules failed.

Figure 7.7-7 shows the major components and their estimated weight for the orbiter EPS (excluding mounting provisions and radiators).

7.7.2.2 Booster Power Source - Prime power for the booster is supplied by six 6.0 KWH rechargeable AgO-Zn batteries, for available energy totaling 36 KWH. The battery control relays (BCR) are reverse current sensing, as well as control relays, to prevent degradation of the remaining batteries in the event of a battery failure.

ORBITER EPS WEIGHT

ITEM	QTY.	UNIT WT. (LB)	TOTAL WT. (LB)
Fuel Cell Module	4	100	400
Reactant Control Assy.	2	15	30
Thermal Control Unit	1	40	40
Product Water Subsystem	1	40	40
Control Subsystem	1	40	40
Hydrogen Tank	1	105	105
Hydrogen	-	--	85
Oxygen Tank	1	112	112
Oxygen	-	--	680
Inverter	4	40	160
Peaking/Emergency Battery	2	115	230
Power Distribution Subsystem	-	--	700
TOTAL			2,622

Figure 7.7-7

The booster power source is sized so that the mission can be completed with two battery failures.

Figure 7.7-8 shows the major components and their estimated weight for the booster EPS (excluding mounting provisions).

BOOSTER EPS WEIGHT

ITEM	QTY	UNIT WT (LB)	TOTAL WT (LB)
200 A-H AgO-Zn Battery	6	115	690
Inverter	4	40	160
Power Distribution	-	---	700
TOTAL			1550

Figure 7.7-8

7.7.3 Alternate Concepts - During the course of the study, several different power sources were investigated for potential use in the space shuttle vehicle. These are listed in Figure 7.7-9 along with the advantages and disadvantages of each candidate.

A turboalternator power source may be competitive with batteries for the booster, due to the relatively short flight duration. This is especially true if the same turbines are used to drive hydraulic pumps as well as alternators. Further study is required in this area with more complete analysis of the electrical and hydraulic load requirements.

7.7.4 Distribution Voltage Trade Study - Figure 7.7-10 shows circuit weight vs. cable length for several loads at two distribution voltages - 28VDC and 115VDC. The source voltage in both cases was considered to be 28VDC. The circuit weights for 115VDC include the weight of DC-DC conversion equipment. The conversion equipment weights were parametrically scaled from a basic equipment weight of 20 pounds per kilowatt capacity. The wire size selections for the various loads and cable lengths were based on wire current capability and allowable line voltage drop. used in the calculations were:

Distribution Voltage	Allowable Drop
28VDC	2V
115VDC	5V

Circuit length is cable run length. The cable length for a circuit is two times the circuit length. For example, a cable 75 feet long consists 150 feet of wire.

The cable lengths at which 115VDC distribution becomes competitive with 28VDC distribution is approximately 95 feet for 250 watt loads and approximately 88 feet for 1000 watt loads.

The main electrical power sources for the baseline vehicles (orbiter and booster) are located in the forward equipment bay. The majority of the electrical/electronic equipment is also located in the forward area of the vehicle with cable lengths of 50 feet or less. Therefore, for equipment located in this area, 28VDC distribution should be used. Further study is required for equipment located outside this area as the equipment locations and power requirements are defined to determine the optimum distribution voltage.

CANDIDATE ELECTRICAL POWER SOURCES

POWER SOURCE	ADVANTAGES	DISADVANTAGES
AgO–Zn BATTERIES (RECHARGEABLE)	• FLIGHT PROVEN • RELIABLE • REUSEABLE • DEVELOPED • SELF CONTAINED	• WEIGHT AND VOLUME INCREASE ESSENTIALLY LINEARLY WITH REQUIRED ENERGY (55–60 WATT-HOURS PER POUND AND 3–5 WATT HOURS PER CUBIC INCH) • RECHARGE PROCEDURE IS COMPLEX WHEN LARGE NUMBER OF BATTERIES ARE INVOLVED. • WET-LIFE LIMITED (1 YEAR OR LESS)
Ni-Cd BATTERIES	• FLIGHT PROVEN • RELIABLE • REUSEABLE • DEVELOPED • SELF CONTAINED	• WEIGHT AND VOLUME INCREASE ESSENTIALLY LINEARLY WITH REQUIRED ENERGY (10–12 WATT-HOURS PER POUND AND 1–1.5 WATT-HOURS PER CUBIC INCH). • RECHARGE PROCEDURE IS COMPLEX WHEN LARGE NUMBER OF BATTERIES ARE INVOLVED.
H_2–O_2 FUEL CELLS	• CONCEPT FLIGHT PROVEN • RELIABLE • REUSEABLE • LONG OPERATING LIFE – CURRENT LIFE 3000 HOURS, DESIGN GOAL 10,000 HOURS • HIGH ENERGY DENSITY (400–450 WATT-HOURS PER POUND, INCLUDING TANKAGE FOR ORBITER ENERGY AND POWER RANGE)	• HIGH PURITY CRYOGENIC REACTANTS REQUIRE TANKAGE SEPARATE FROM PROPULSION REACTANTS • LIMITED TO DC GENERATION. • MATRIX TYPE FUEL CELLS REQUIRE FLIGHT QUALIFICATION.
TURBOALTERNATOR (H_2–O_2 FUEL)	• LIGHT WEIGHT EQUIPMENT • FUEL SOURCE CAN BE COMMON WITH MAIN PROPULSION TANKS • OPTION OF AC OR DC GENERATION • OPTION OF HIGH OR LOW VOLTAGE GENERATION	• HIGH FUEL CONSUMPTION (2.5–4 POUNDS PER KWH) • COMPLEX CONTROL SYSTEM. • TURBINE EFFICIENCY IS POWER SENSITIVE. • TURBINE EFFICIENCY IS ALTITUDE SENSITIVE. • EXHAUST GAS CAN CAUSE VEHICLE ATTITUDE CHANGE • SHORT DEMONSTRATED OPERATING LIFE (250 HOURS) • DEVELOPMENT REQUIRED.
TURBOALTERNATOR (MONOPROPELLANT HYDRAZINE WITH CATALYST BED)	• LIGHT WEIGHT EQUIPMENT • CONTROL LESS COMPLEX THAN H_2–O_2 UNIT • OPTION OF AC OR DC GENERATION • OPTION OF HIGH OR LOW VOLTAGE GENERATION	• HIGH FUEL CONSUMPTION (5–10 POUNDS PER KWH). • SEPARATE FUEL TANK REQUIRED. • TURBINE EFFICIENCY IS POWER SENSITIVE • TURBINE EFFICIENCY IS ALTITUDE SENSITIVE • EXHAUST GAS CAN CAUSE VEHICLE ATTITUDE CHANGE • SHORT DEMONSTRATED OPERATING LIFE (250 HOURS) • DEVELOPMENT REQUIRED.

Figure 7.7–9

28 VDC vs 115 VDC DISTRIBUTION TRADE STUDY

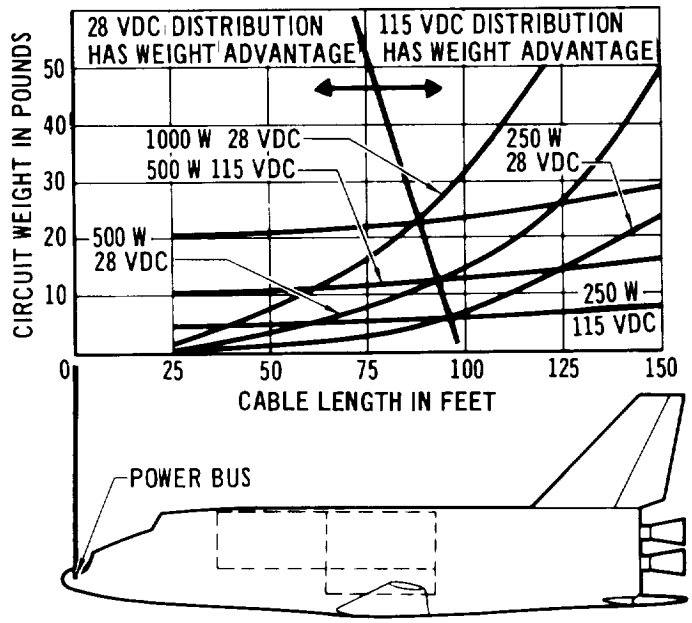

Figure 7.7-10

7.7.5 Reliability - The electrical power subsystems for both the orbiter and the booster are designed for mission completion with two power sources failed (orbiter - 2 fuel cell modules failed, and booster - 2 batteries failed). The busing is arranged for maximum utilization of remaining power sources in the event of a failure, and redundant using equipment is divided between the separate buses. Fault isolation devices will be utilized to prevent bus degradation from failures in loads or short circuits in interconnecting wiring. Further definition of the vehicle configuration is required to define the fault isolation scheme to be used.

7.7.6 Conclusions and Recommendations - From this study, it is concluded that the electrical power required by the booster and the orbiter can be supplied efficiently with present day technology.

It is recommended that remaining development and flight qualification testing be completed for matrix type H_2-O_2 fuel cell modules in the 2.0 - 2.5 KW range. Both the Allis Chalmers "high performance fuel cell" and the Pratt-Whitney PC8-3B units are considered as suitable prototype modules.

7.8 Integrated Avionics Reliability - The Space Shuttle requirements of autonomy and economical operation dictate stringent reliability goals as shown in Figure 7.8-1. The goals of (1) remaining operational after two failures and safe after the third failure, (2) avoiding minimum performance backups, (3) minimizing system transients due to failure, and (4) high mission success probability, all dictate redundancy. These goals require equipment and system designs which have sophisticated methods of failure detection and selection of properly functioning units.

To meet these goals, both modular and functional redundancies are being used. In some cases we are able to provide backup with equipment already required for other functions. For example, the optical sensor is primarily used for inertial alignment and as an orbital navigation sensor, but it can also be used to backup the radar as a target tracker for rendezvous.

Another area of concern is failure detection and switchover between redundant units. The requirement to minimize switching transients impacts the techniques to be used as well. With three data sources, active majority voting can be used to determine which output is in error and thus allow switchover to a monitored middle selection output. Other techniques such as "Pair and Spare", where two systems are compared for discrepancies in outputs, and switched to a third unmonitored system, do not meet the switchover transient criterion. The use of fade-in logic to control the rate of change of output signals would help. Another important factor in achieving a high probability of mission success is to have a ground maintenance analysis program. Trend data recorded onboard, historical failure records, and periodic inspection data are used to program replacements of onboard equipment.

An example of equipment redundancy implementation for the guidance and control system is shown in Figure 7.8-2.

7.9 Equipment Installation - Factors considered in determining the installation of avionics equipment were accessibility, performance and affect on vehicle center-of-gravity.

The major elements of the Integrated Avionics System are installed in the equipment bay located in the pressurized area behind the crew compartment. Performance degradation and cable complexity are minimized as a result of locating these elements in close proximity to each other and to the crew cockpit controls and displays.

The remaining elements of the Integrated Avionics System are installed either in the forward equipment bay (performance not affected by location) or at specific locations required to achieve performance. The primary power system is installed in the forward equipment bay.

RELIABILITY GOALS

GOAL	APPROACH
• FIRST AND SECOND FAILURE – REMAIN OPERATIONAL • THIRD FAILURE – NON-CATASTROPHIC	• MODULAR AND FUNCTIONAL REDUNDANCY • FAILURE DETECTION AND SWITCHOVER
• AVOID MINIMUM PERFORMANCE BACK-UPS	• FUNCTIONAL REDUNDANCY PERMITTED WHEN MISSION PERFORMANCE IS NOT REDUCED. • USE EQUIPMENT ON BOARD FOR OTHER MISSION REQUIREMENTS
• MINIMIZE SYSTEM TRANSIENTS DUE DUE TO FAILURE	• ACTIVE FAILURE DETECTION (e.g. MIDDLE SELECT) • FADE-IN LOGIC
• MISSION SUCCESS	• HI-RELIABILITY EQUIPMENT • ON-BOARD FAULT DETECTION AND REDUNDANCY • PROGRAMMED GROUND MAINTENANCE

Figure 7.8–1

TYPICAL REDUNDANCY APPLICATIONS
For Orbiter G & C Functions

SUBSYSTEM ELEMENT	REDUNDANCY EMPLOYED	RELIABILITY ESTIMATE
I.G.S. COMPUTER	DEDICATED COMPUTER (TRIPLY REDUNDANT)	.99989
I.M.U.	STRAPDOWN INERTIAL UNIT (TRIPLY REDUNDANT)	.99998
RATE GYRO PACKAGE	BACKUP R.G. PACKAGE	.99997
RENDEZVOUS SYSTEM RADAR	DUAL RADARS – OPTICAL BACKUP	.99999
TIME REFERENCE SYSTEM	DUAL – ACTIVE REDUNDANCY	.99993
STAR TRACKER HORIZON SENSOR	DUAL REDUNDANCY	.99997
DISPLAYS AND CONTROLS	100% REDUNDANT– CRT & HEADS-UP DISPLAY	.99999
TERMINAL RENDEZVOUS OPTICS	DUAL REDUNDANT OPTICAL SUBSYSTEM	.99995
TOTAL (ALLOCATION)	BASED ON .95 GOAL!	.99967 (.9885)

Figure 7.8–2

this equipment in the vertical position or the pad as well as in the horizontal position. The inertial sensor, star tracker and earth horizon tracker are installed on a rigid structure. This structure is located near the top of the vehicle and aft of the crew compartment.

A large viewing cone is provided by extending the star and horizon tracker beyond the vehicle mold line during active use. During ascent and entry, the trackers are covered by a door and retracted within the normal mold line. The SHF antenna is located on top of the vehicle and aft of the payload. Greater than hemispherical pointing capability is provided for communication with a communication satellite. Paragraph 7.6 describes other SHF antenna locations considered. Communication transceivers are located near the antenna to increase the signal to noise margin. Figure 7.9-1 shows the location of the avionics equipment.

AVIONICS CONFIGURATION

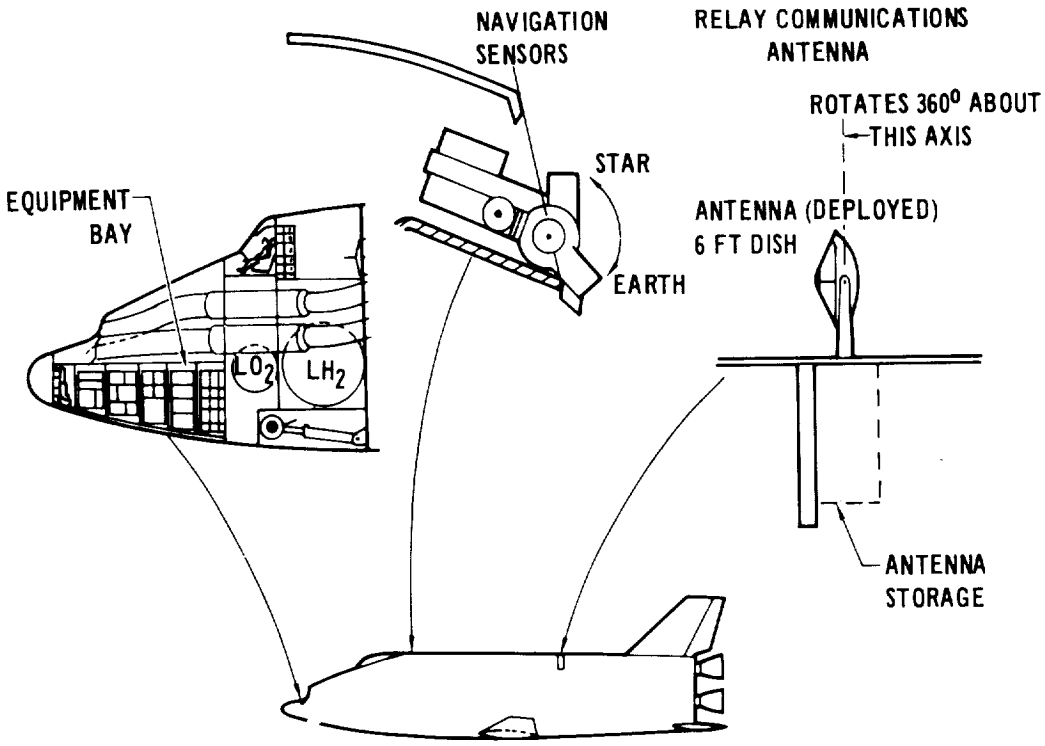

Figure 7.9-1

8. PERFORMANCE AND FLIGHT MECHANICS

Several studies have been completed in order to define the booster/orbiter performance and flight mechanics characteristics. These studies investigated the entire mission profile (typical profile presented in Figure 4-1) to evaluate the feasibility of the baseline configurations. Performance and flight mechanics investigations include the following areas: (1) optimum ascent trajectories; (2) booster-orbiter separation; (3) booster entry flyback; (4) orbiter entries; (5) angle of attack transition; (6) jet engine level flight envelopes; (7) approach and landing; (8) go-around; (9) horizontal take-off performance and ferry capability; and (10) handling qualities. The results of these analyses demonstrate the capability of the baseline configurations to perform their respective mission objectives.

8.1 Ascent Trajectory Analysis - A point-mass launch optimization computer program, Reference 8-1, has been used to compute an ascent trajectory to a 55 degree inclination, 51-100 na. mi. orbit. The simulation utilizes calculus of variations techniques to determine the thrust angle variation (angle between thrust vector and freestream velocity vector) during the guided second stage to minimize velocity losses and yield the desired insertion conditions. Significant parameters from the nominal ascent trajectory are presented in Figure 8.1-1. This trajectory is divided into the following four phases:

1. Lift-off - 20 seconds; vertical rise (launch vehicle is rolled during this period to obtain the desired launch azimuth)
2. 20 seconds - Stage I burnout; non-lifting gravity turn
3. Stage I burnout - Stage II ignition; coast period required for adequate separation clearance
4. Stage II ignition - Stage II burnout; vehicle guided to fly optimum thrust angle profile

It should be noted that maximum dynamic pressure is approximately 500 lbs. per square foot. During Stage I flight the engines are throttled to avoid exceeding 2.5 g's and during Stage II they are throttled to avoid 3 g's. The 2.5g limit is desirable from the standpoint of structural loading on a piggyback

NOMINAL ASCENT TRAJECTORY

h_a = 100 NA.MI., h_p = 51 NA.MI.
i = 55°

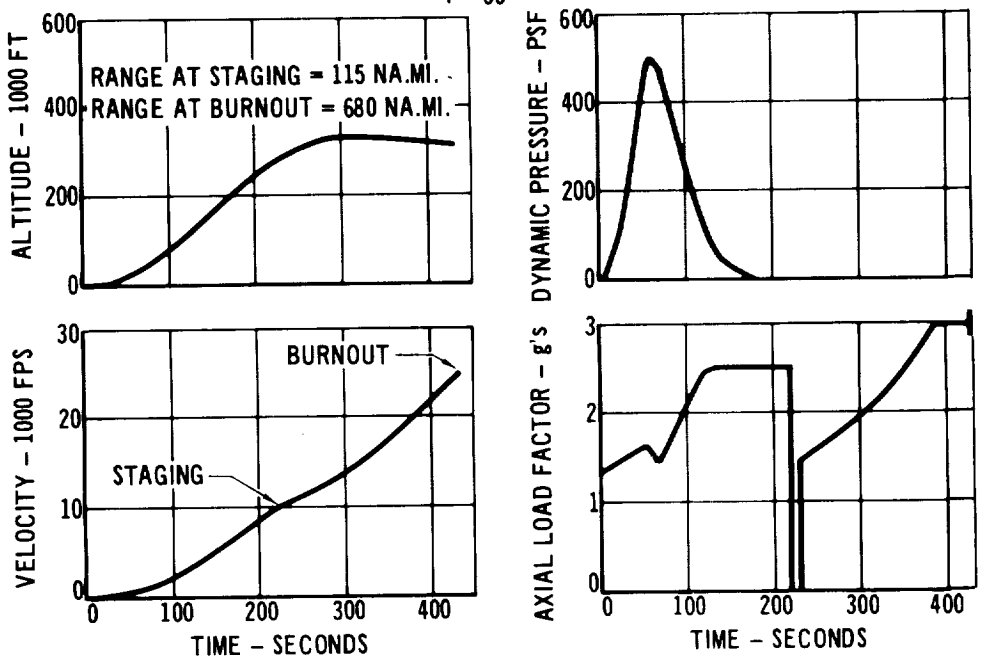

Figure 8.1-1

configuration while the 3g limit is related to passenger comfort. The total velocity loss associated with the nominal ascent is 5527 feet per second. A breakdown of the losses is presented in Figure 8.1-2.

ASCENT TRAJECTORY VELOCITY LOSSES

CAUSE	VELOCITY LOSS Ft/sec.
Gravity	4451.
Drag	629.
Back Pressure	290.
Maneuvering	157.
Total	5527.

Figure 8.1-2

Since the earth referenced insertion velocity is 24,965 feet per second (insertion of perigee), the nominal ideal velocity is 30,492 feet per second (sum of insertion velocity and total velocity losses). Some additional ideal velocity

will be required to compensate for off-nominal engine performance, dispersed atmospheric condition, non-ideal guidance, etc.

The effect of Stage I and Stage II thrust-to-weight ratio on the ascent trajectory velocity losses is shown in Figure 8.1-3. The effect of Stage II T/W on velocity losses is of particular interest when considering the one-engine out requirement. Typical Stage II one-engine out performance (including a 10% over-speed results in an initial T/W of approximately .85 which corresponds to a total velocity loss of 6400 feet per second compared to 5527 feet per second for nominal engine performance. Therefore to insert into an acceptable orbit, utilization of some propellant from the orbit maneuvering velocity budget will be required.

EFFECT OF THRUST-TO-WEIGHT RATIO ON VELOCITY LOSSES

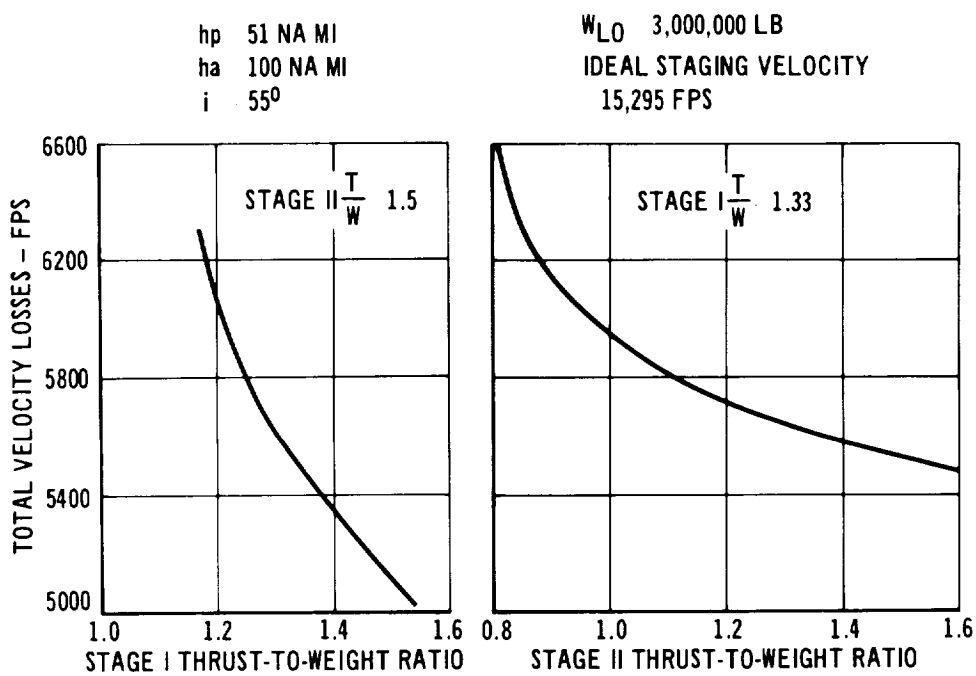

Figure 8.1-3

8.2 Booster-Orbiter Separation - A simulation of the booster-orbiter separation characteristics has been performed based on the following assumptions:

1. Booster thrust termination before separation
2. Booster-orbiter separation induced by a stoke of 200,000 pounds over a distance of 1 foot (reference section 3.1 for design)
3. No aerodynamic effects (q < 1 psf)

4. Orbiter thrust increases linearly to full thrust in 4.3 seconds
5. RCS available to damp orbiter/booster induced rates
6. Orbiter receives no guidance command during separation

Two cases are shown in Figure 8.2-1 to illustrate the effect of igniting the orbiter engine at separation, and at 5 seconds following separation. The results of the simulation indicate that satisfactory separation is achieved for a 5 second delay between separation initiation and orbiter ignition. The separation characteristics are relative to a coordinate system fixed in the booster. The 5 second delay reduces problems associated with recontact and plume impingement. Delays of less than 5 sec. between separation initiation and orbiter engine ignition may not result in a recontact problem. However, depending on the heat fluxes present in the plume during orbiter thrust build-up, impingement may be a problem. When the orbiter reaches full thrust, the separation distance (150 feet, approximately 20 nozzle diameters) is such that impingement should not be a problem.

ORBITER – BOOSTER SEPARATION TRAJECTORY

1. BOOSTER RCS IN RATE DAMP MODE
2. CG LOCATIONS SHOWN AT ONE SECOND INTERVALS

CASE 1		CASE 2 (NOMINAL)	
TIME – SEC	EVENT	TIME–SEC	EVENT
T=–4.3	BOOSTER SHUTDOWN	T = –4.3	BOOSTER SHUTDOWN
T 0.0	SEPARATION	T = 0.0	SEPARATION
T = 0.0	ORBITER IGNITION	T = 5.0	ORBITER IGNITION
T = 4.3	ORBITER AT FULL THRUST	T = 9.3	ORBITER AT FULL THRUST

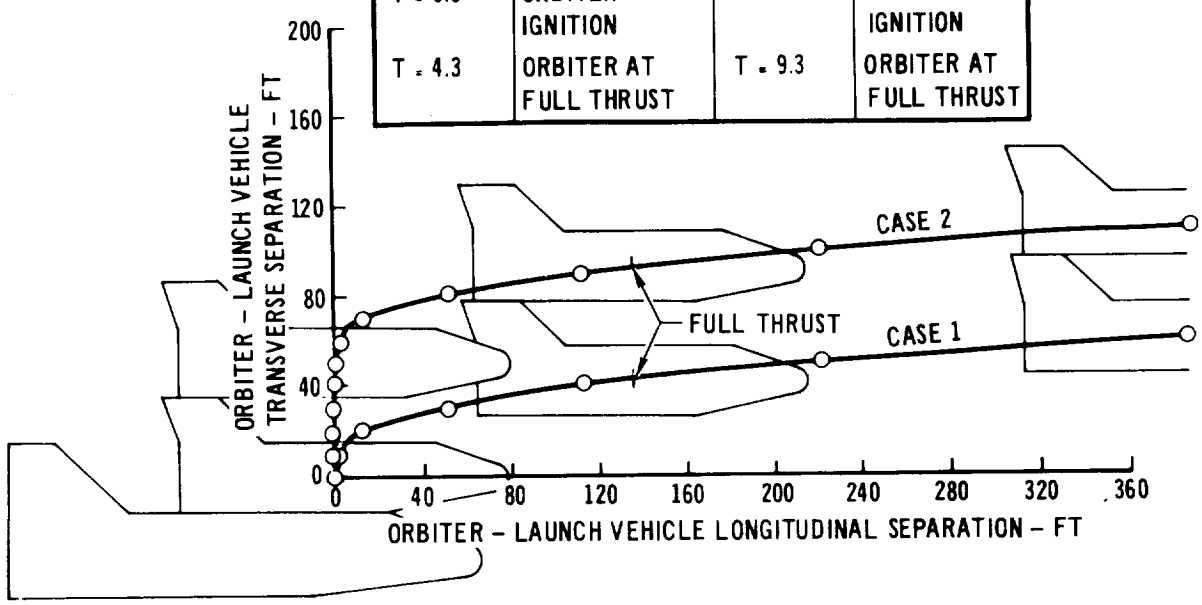

Figure 8.2–1

8.3 Booster Entry/Flyback - Point mass computer simulations of several possible booster flyback trajectories have been performed to estimate the structural loading and the flyback range requirements. During reentry the booster is bank modulated to both take advantage of the downrange reduction available from negative lift reentries and the low load factors resulting from positive lift reentries.

The optimum selected control technique involves a negative lift (180 degree bank angle) during the early low dynamic pressure region to minimize downrange followed by a full lift (zero bank angle) phase to reduce the maximum normal load factor. Following peak load factor, the vehicle is then banked 80 degrees to turn the velocity vector toward the launch site. This type of bank angle modulation causes the booster to quickly approach and remain near its maximum entry load factor.

A typical flyback trajectory is shown in Figure 8.3-1 and results in a maximum normal load factor of 4.7 g's and a downrange of 450 nautical miles. This trajectory also resulted in a maximum dynamic pressure of 130 lbs/ft^2 occurring near Mach 7. The most significant parameter affecting flyback range and the resulting maximum normal load factor is booster-orbiter staging altitude. For a staging altitude of 280,000 feet, the flyback range/max load factor are 450 na. mi./4.7 g's whereas for a staging altitude of 234,000 feet, the flyback range/max load factor are reduced to 339 na. mi./3.9 g's.

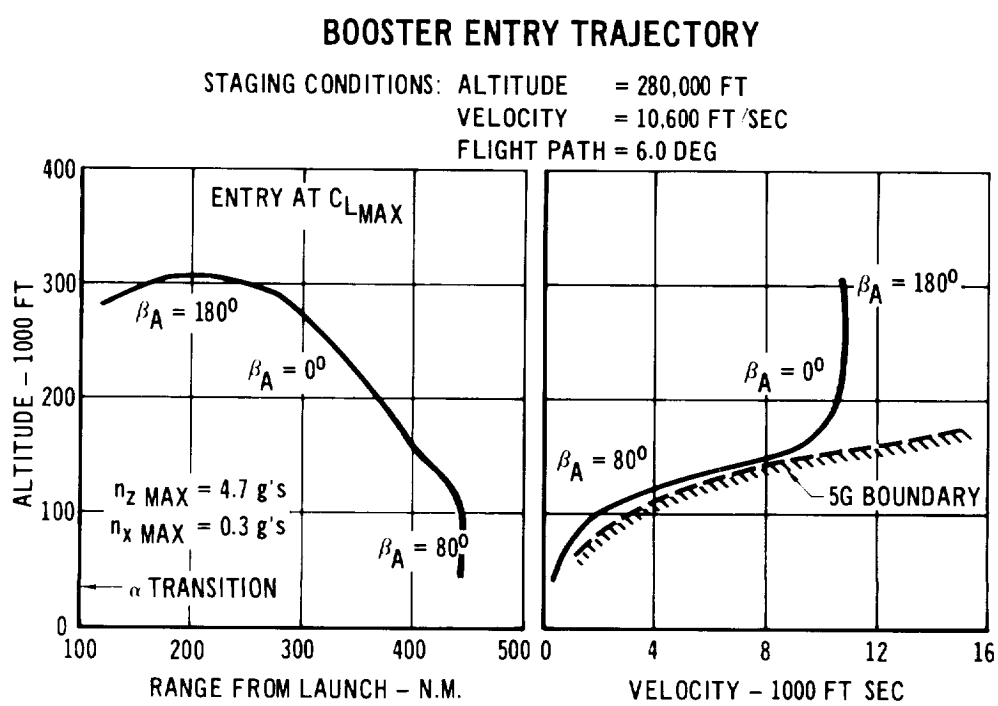

Figure 8.3-1

8.4 Entry Trajectory - Orbiter entry trajectories have been generated utilizing a point mass computer simulation (Reference 8-2). A nominal entry from a 55 degree inclination, 270 nautical mile circular orbit is shown in Figure 8.4-1. The orbiter enters the atmosphere at 60 degrees angle of attack at full lift attitude (zero bank angle). Encountering the sensible atmosphere at approximately 260,000 feet, the orbiter begins to pull-out due to the increased aerodynamic lift. The orbiter is then bank modulated at constant angle of attack to maintain a constant altitude until reaching the velocity of a full lift equilibrium guide entry trajectory. The glide entry is then flown until reaching an altitude of approximately 50,000 feet (M = .4) when angle of attack transition is initiated.

The advantage of a 60 degree angle of attack is twofold. First, it is near maximum lift coefficient and therefore yields low entry load factors (1.5 g's) and a low maximum heating rate (62 BTU/ft^2-sec). Secondly, it is a high drag configuration resulting in relative short entry time and low total heat.

The lateral range capability associated with 60 degree angle of attack (L/D = .53) is approximately 230 nautical miles. In combination with the velocity increment available for return phasing (55 ft/sec), 230 nautical miles is sufficient for once a day return capability.

ORBITER ENTRY TRAJECTORY
Entry from a 270 N.M. Circular Orbit

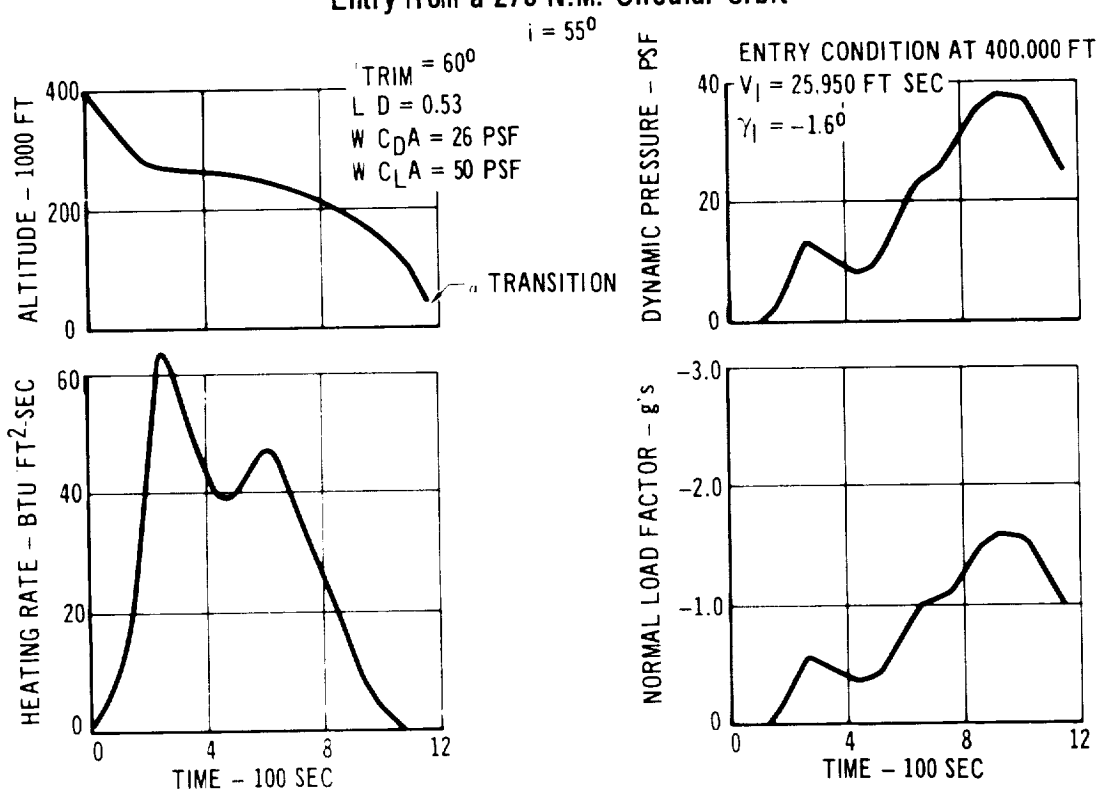

Figure 8.4-1

8.5 Angle of Attack Transition - The orbiter and booster entry occurs at high angles of attack ($\alpha = 60°$) to take advantage of the reduced heating and loads. However, low angles of attack are required for subsonic cruise and landing.

The subsonic aerodynamic stability of this vehicle permits operation at both attitudes because of two stable trim points ($\alpha = 7°$, $\alpha = 60°$). Transition of the vehicle from the high angle of attack entry attitude to the low angle of attack cruise attitude is achieved by proper elevator control.

A typical elevator deflection time history to accomplish the transition maneuver and resulting trajectory are shown in Figure 8.5-1. An initial positive (down) elevator deflection is required to eliminate the high angle of attack trim point and start the vehicle rotating to lower angles of attack. As negative pitching rates increase, a return of the elevator to the subsonic trim position allows the body to rotate and damp about the low angle of attack trim point. The maneuver requires approximately 40 seconds and a loss of 15,000 ft. altitude. During the maneuver Mach number reaches a maximum of .7 while the maximum load factor reaches 1.9 g's. The resulting altitude, Mach number and angle of attack at the end of transition permit immediate jet engine ignition for subsonic cruise.

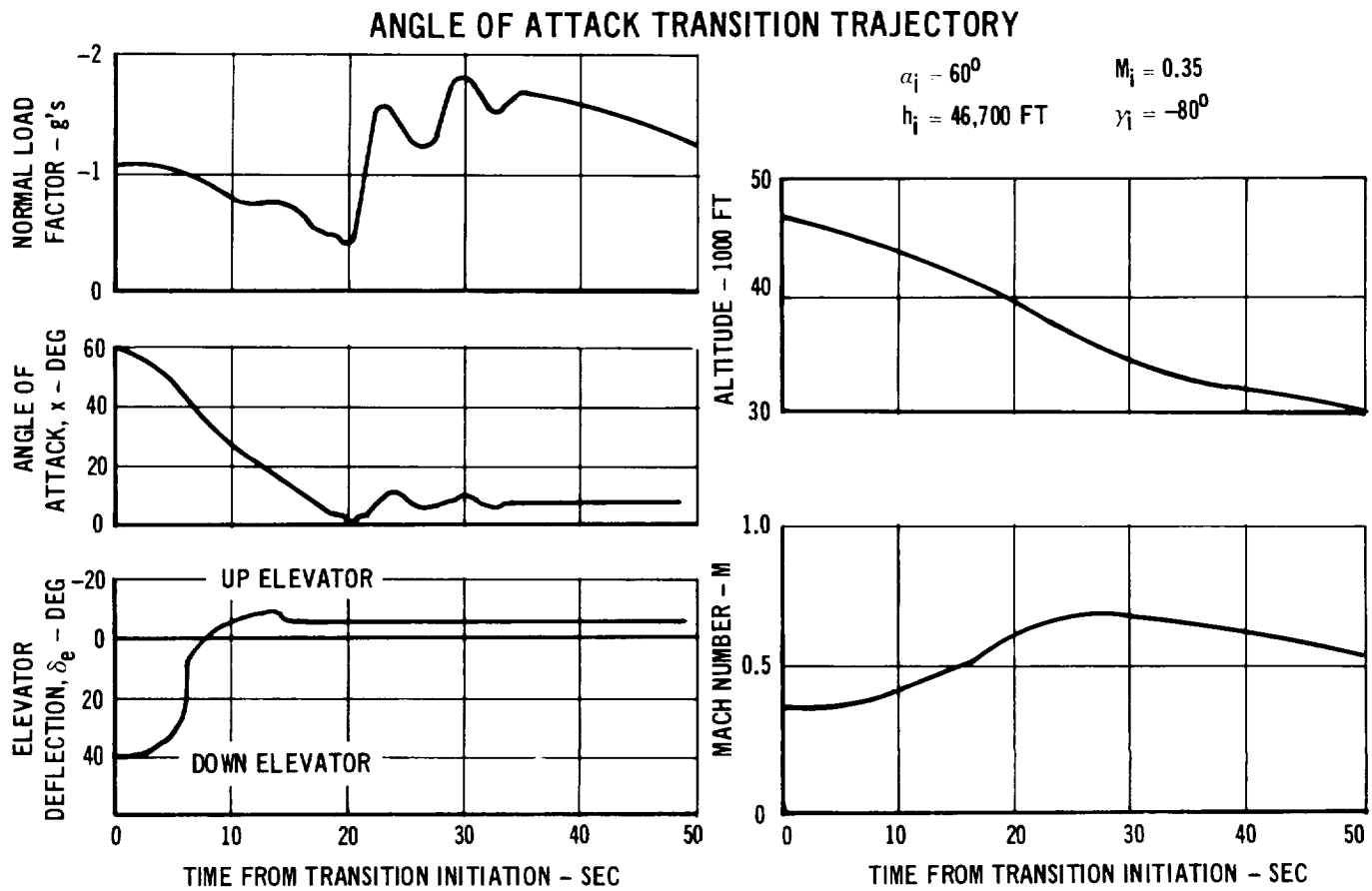

Figure 8.5-1

8.6 Orbiter/Booster Jet Engine Level Flight Envelopes - After the transition from the "high" entry trim angle of attack (60°) to the subsonic cruise/landing trim position, the jet engines are started for cruise and landing. Figure 8.6-1 shows the orbiter/booster jet engine level flight envelope. These envelopes define the possible regions of flight for the normal all engines operating case and for the one engine out case. Only one envelope is shown for the orbiter since the jet engine start and landing weights are nearly identical (no subsonic fly-back required). However, since the booster has an extensive flyback range requirement and JP fuels were stipulated, there is a significant weight increment between the beginning of flyback and landing, resulting in the two envelopes.

The envelopes shown are for a maximum cruise power setting for all cases except the booster one engine out at the beginning of flyback. Maximum continuous power is required for this case due to the reduction in available thrust and the

ORBITER/BOOSTER JET ENGINE LEVEL FLIGHT ENVELOPE

Maximum Cruise Power Setting

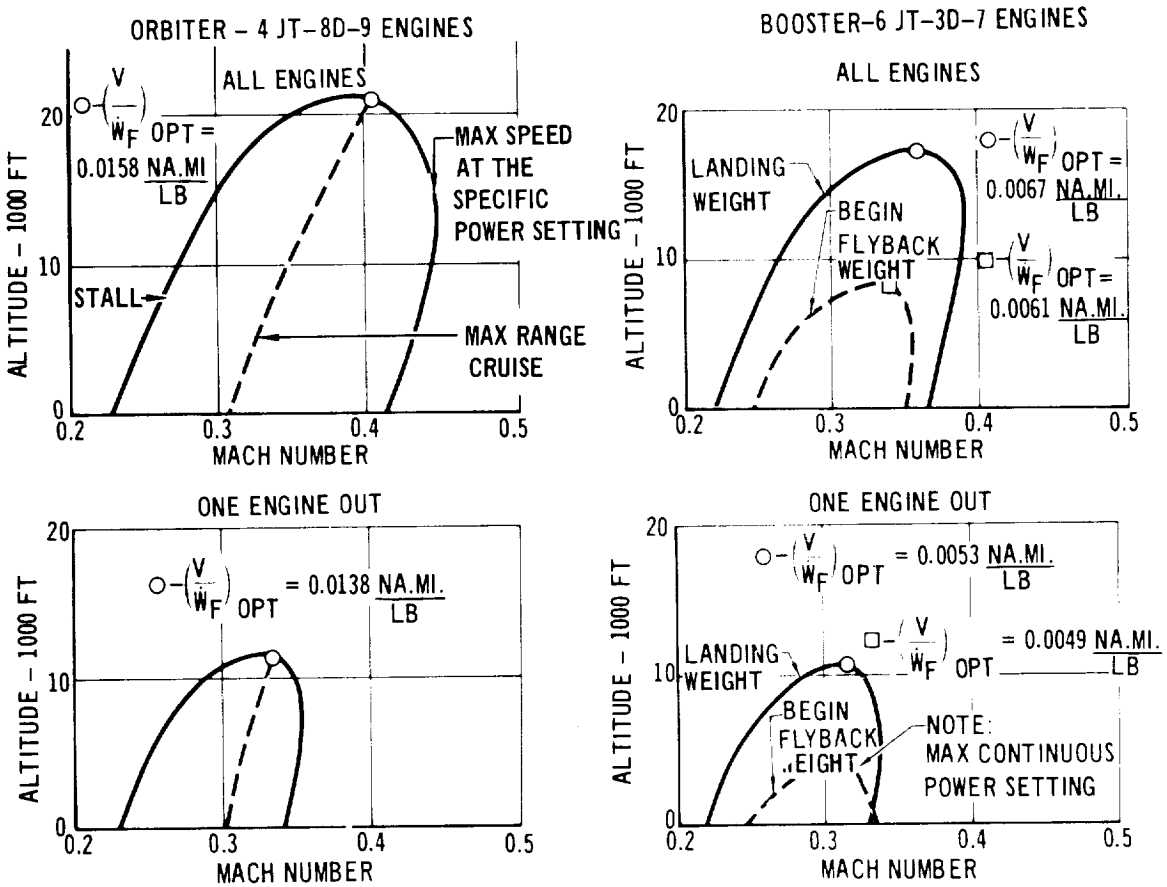

Figure 8.6-1

larger weight associated with a full JP fuel load. As fuel is consumed, the throttle setting may be reduced.

As indicated, the orbiter flight envelope is superior to that of the booster even though the nominal mission has no significant orbiter cruise requirement. However, the following criteria dictate that a large orbiter cruise envelope is desirable.

Mission Flexibility - The booster has only one basic mission to launch the orbiter and flyback to the launch site, always over the ocean or low level ground terrain for our nominal mission. However, the orbiter may be required to land at high elevation anywhere in the world due to special missions and/or emergency deorbits. The large flight envelope permits such mission flexibility as well as facilitating the ferrying back to the launch site.

Safety - The large orbiter flight envelope provides a greater safety margin for the manned orbiter compared to the nominally unmanned booster.

8.7 Approach and Landing - Following transition and engine start, the orbiter must nullify entry range errors, approach, and land at the selected airfield. Figure 8.7-1 illustrates this procedure as well as presenting the required runway length. Preliminary studies show the closed-loop entry range error will be less than 10 na. mi. during the descent from transition. This range error requires no flyback fuel since the orbiter has a glide capability greater than 20 na. mi. during the descent from transition. At the start of approach, 2000 ft. altitude, power is added to reduce the glide slope to 2.7° (normal instrument approach glide slope) at the outer marker located 8 st. mi. from the runway. Typical of an airliner approach, power is added to maintain the constant 2.7° glide slope as flaps and the landing gear are lowered. As per FAA regulations, the end of the runway is crossed at an altitude of 50 ft and a velocity of 1.3 V_{stall}. Utilizing only present day anti-skid main gear brakes, the required runway length is less than 5000 ft for a dry runway and less than 8000 ft for a wet runway for the normal maximum touchdown weight. Thus, a large number of airfields throughout the world could be used. Also shown on Figure 8.7-1 is the reduction in runway length permitted by the addition of a 40 feet drag parachute.

Figure 8.7-1 shows the required runway length based on approach speeds associated with a 55° flap setting for a standard day at sea level. Figure 8.7-2 indicates the sensitivity of landing speeds for various off-nominal conditions, i.e., wing loading, hot day, elevation, and failure to lower flaps.

TYPICAL APPROACH AND LANDING

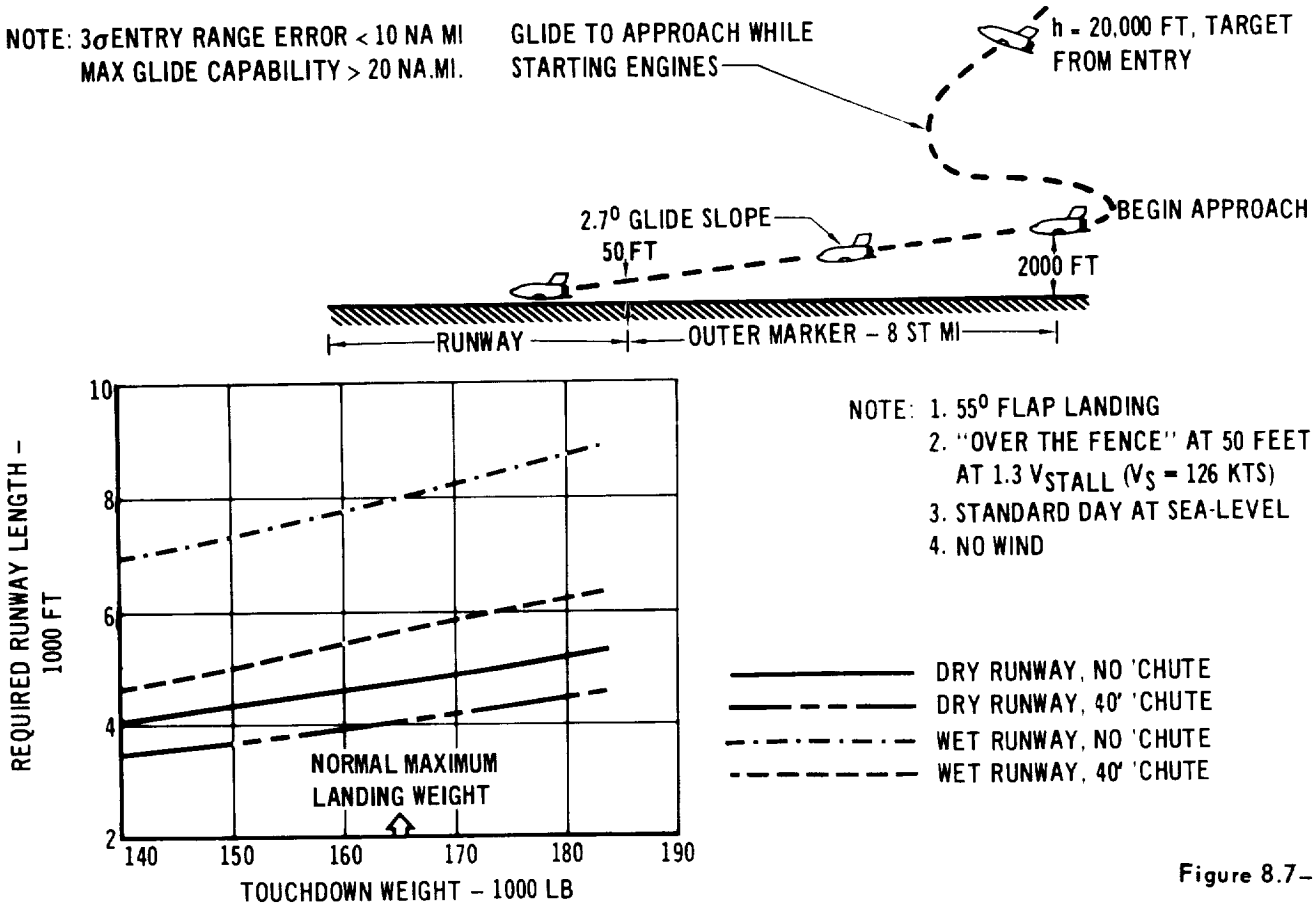

Figure 8.7–1

LANDING SPEEDS – ORBITER

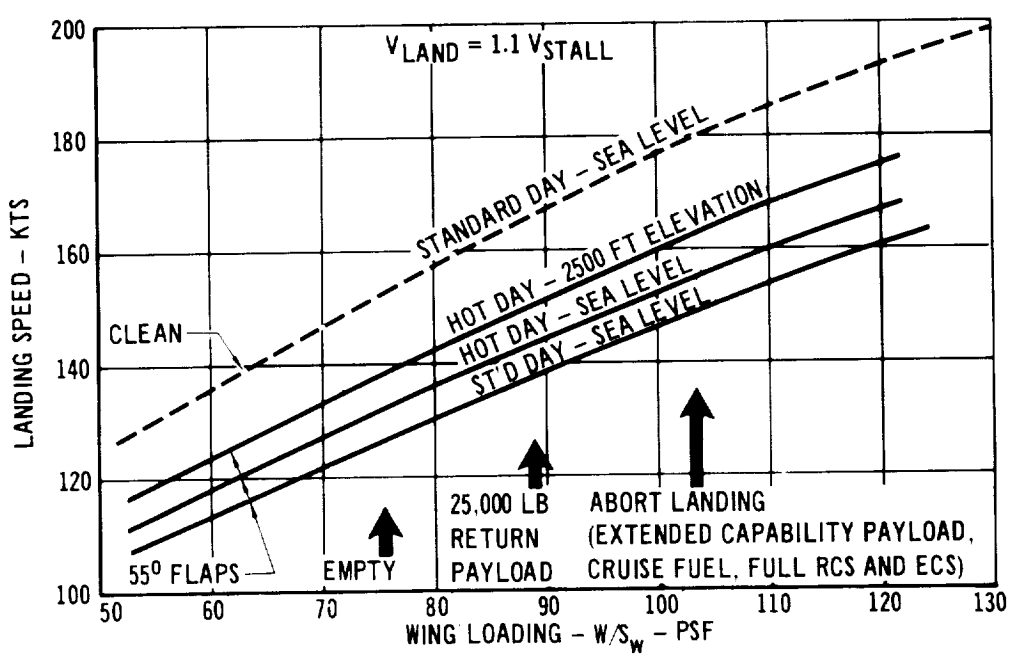

Figure 8.7–2

8.8 Go-Around - Although the probability of an aborted landing is remote, crew and passenger safety require the orbiter to have go-around capability. Figure 8.8-1 shows a representative orbiter go-around ground track and thrust history. These data were obtained on the McDonnell Douglas Visual Approach simulator (a fixed-base hybrid facility with visual cues) with a NASA/Flight Research Center test pilot at the controls. The representative flight vehicle had an $(L/D)_{max} = 6$ and $(T/W)_{max} = .25$ corresponding to the present orbiter capability of $(L/D)_{max} = 6$ for approach flaps (20°) and $(T/W)_{max} = .27$. Fuel requirements for approach, landing abort, climb-out, go-around, re-approach and land correspond to that required for 5 minutes at maximum take-off power.

REPRESENTATIVE ORBITER GO-AROUND AND LANDING

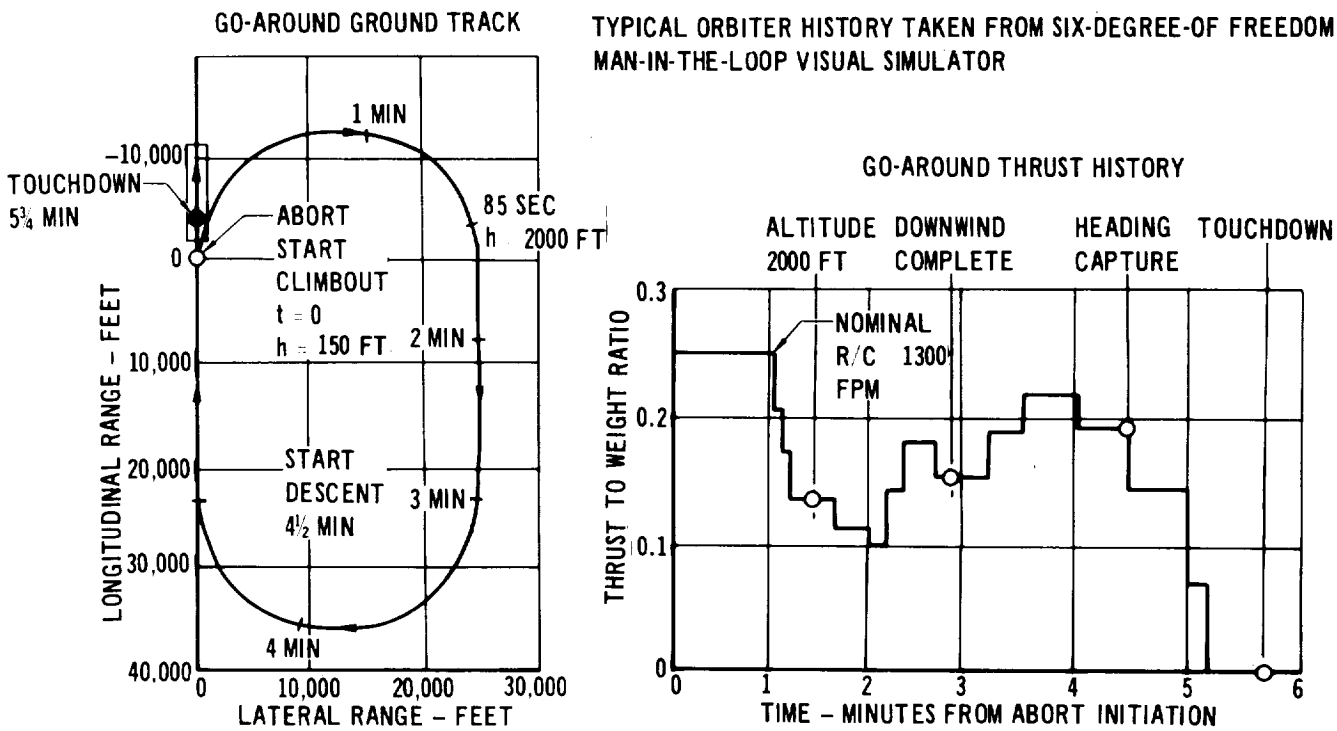

Figure 8.8-1

8.9 Take-Off Performance and Ferry Capability - Both the orbiter and booster have requirements for normal airplane horizontal take-off for flight test as well as ferry missions, thus requiring reasonable take-off distances. Figure 8.9-1 provides the orbiter/booster critical field length. The critical field length is defined as the length required to accelerate with all engines operative to the critical engine failure speed; then in case of an engine failure to continue with a safe take-off or abort the take-off and stop on the remaining

runway. The nominal field length required is 6000 feet for the orbiter and 10,000 feet for the booster.

Approximate ferry ranges are also shown for the various take-off weights. The booster may use the flyback propellant tanks to hold the ferry fuel, but the orbiter must rely on putting fuel in the payload compartment (no payload for ferry missions). Additional ferry range, if required, could be obtained by in-flight refueling.

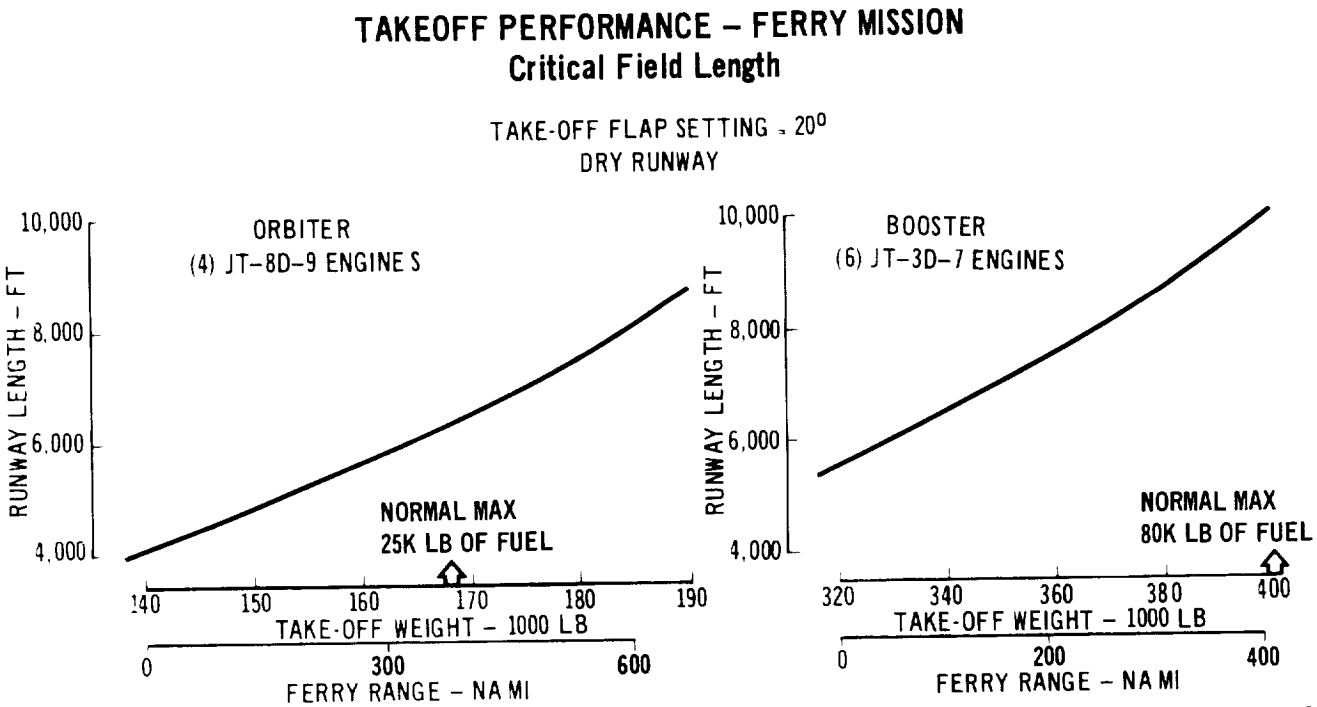

Figure 8.9-1

8.10 Handling Qualities - Various criteria have been formulated to evaluate the dynamic response of aircraft following a control input or random disturbance. The dynamic modes of greatest interest in this evaluation are the longitudinal short period mode and the lateral-directional or Dutch roll mode. Preliminary characteristics have been calculated for typical cruise and landing conditions, using available wind tunnel static stability data and estimated dynamic stability derivatives, weight, and inertia characteristics. Characteristics were also calculated for a hypersonic glide condition using estimated aerodynamic coefficients. These are compared to available criteria and the need for augmentation during reentry, cruise and landing are assessed.

8.10.1 Longitudinal Short period Dynamics - Preliminary estimates of the short period response characteristics are shown in Figure 8.10-1 for typical hypersonic glide, subsonic cruise, and landing conditions. These are compared to

MIL-F-8785 SHORT PERIOD FREQUENCY REQUIREMENTS AND HANDLING QUALITIES CHARACTERISTICS OF ORBITER

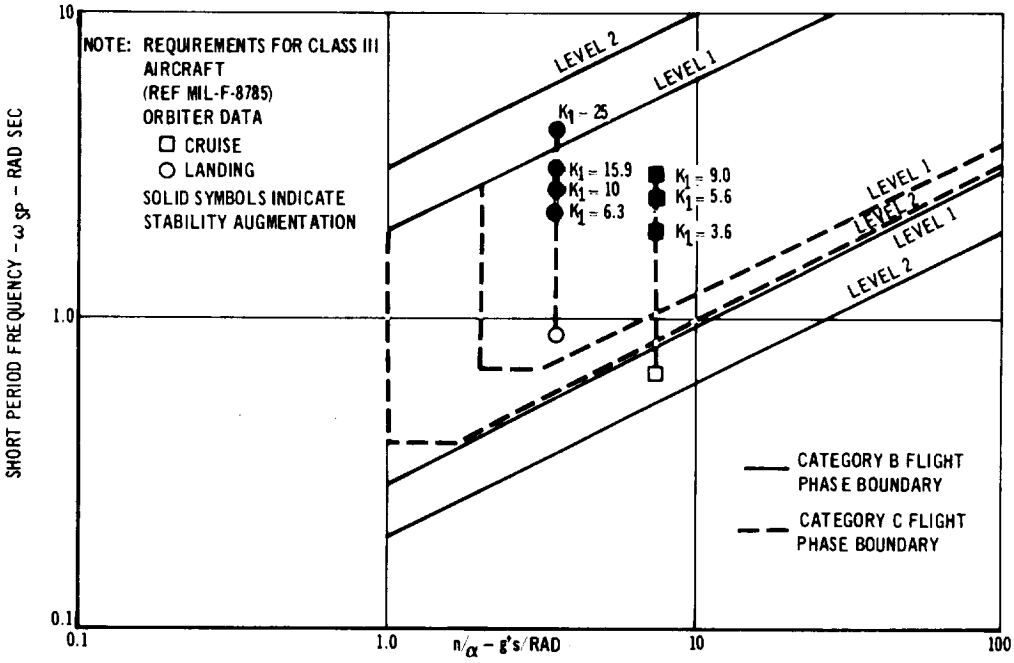

CAL LONGITUDINAL SHORT PERIOD REQUIREMENTS AND HANDLING QUALITIES CHARACTERISTICS OF ORBITER

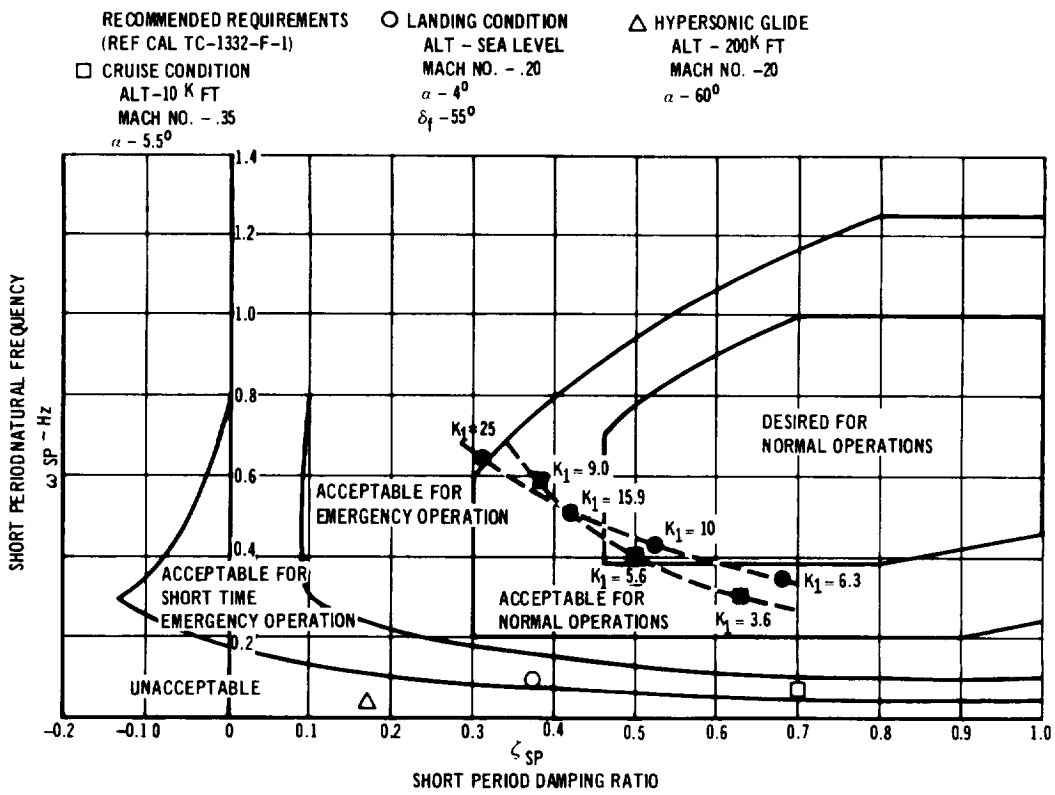

Figure 8.10-1

both the criteria of MIL-8785B (Reference 8-3) and criteria proposed by Cornell Aeronautical Laboratory (CAL), Reference 8-4.

The top figure of Figure 8.10-1 shows the desired envelope from Reference 8-3 for short period frequency (ω_{SP}) for Category B (Cruise) and Category C (Landing). Level 1 boundaries are the most desirable and represent minimal pilot effort in controlling the vehicle. The unaugmented Basic Airframe (BA) is shown to be acceptable for landing and marginally acceptable for cruise.

The CAL envelope, which has been used extensively in past studies, is shown in the bottom figure of Figure 8.10-1. Values for the basic unaugmented airframe are shown to be unacceptable for normal operation by this criteria because of the low frequency. In addition, the damping ratio at landing is marginal compared to the MIL-8785B Level 1 requirement of 0.35. To improve the short period characteristics, a pitch rate command augmentation system was added using a cancelled (or differentiated) signal from the platform pitch gimbal for a rate feedback. A value of 0.3 seconds was used for the canceller time constant. This method permits use of the rate signal without further cancellation, since the signal is referenced to horizontal. The inherent 0.3 second lag from the canceller acts as a filter for noise reduction or elimination of structural flexibility feedback. The error signal is fed through an integrating actuator which also has a typical actuator lag of 0.05 seconds. The command signal $\dot{\theta}_C$ could come from a pilot stick controller or from an autopilot command source. Limiting this command signal effectively limits change in angle of attack or change in normal acceleration.

Figure 8.10-2 shows the block diagram of the pitch command augmentation system. The results of pitch augmentation are shown for various values of K_1 in Figure 8.10-1. Note that both envelopes can be satisfied using values of $K_1 = 10.0$ for landing and $K_1 = 5.6$ for cruise, so that the gain must be changed going from the cruise to the high lift landing configuration.

This system is also capable of giving the same performance for wide variations in aircraft weight or cg position. It should be noted that loop gain K_1 is multiplied by canceller numerator gain; thus a K_1 of 10.0 is the same as an effective pitch rate gain of 3.0 degrees of elevator deflection, per degree per second of pitch rate.

8.10.2 Lateral-Directional Dynamics - Estimated response characteristics in the Dutch roll mode are compared in Figures 8.10-3 and 8.10-4 to criteria of Reference A-17. Both criteria indicate unsatisfactory response in both the cruise and landing condition for the unaugmented airframe.

ORBITER CONTROL AUGMENTATION

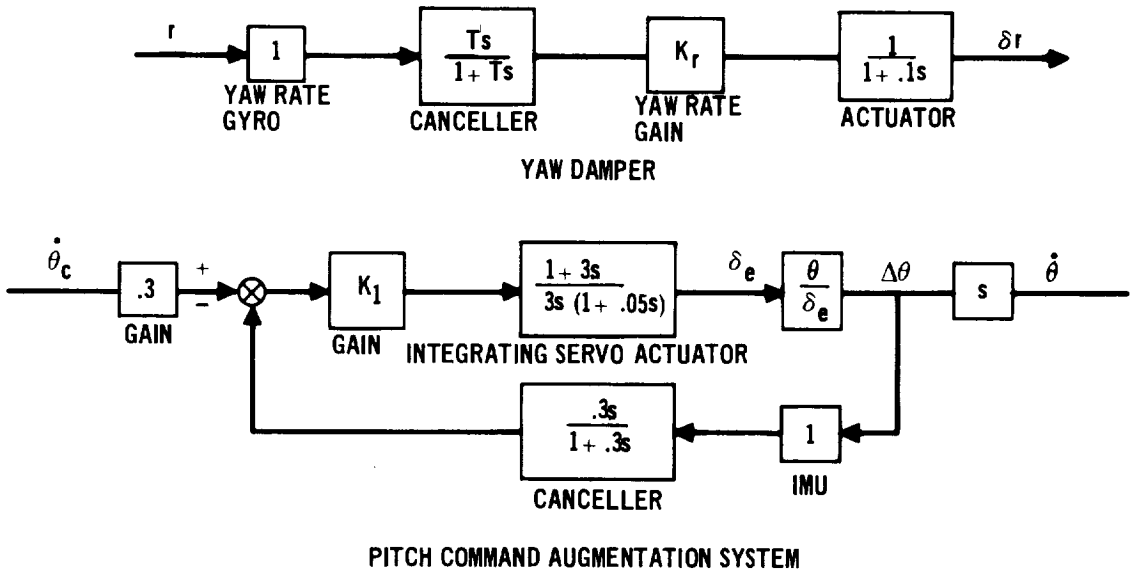

Figure 8.10–2

LATERAL OSCILLATORY CHARACTERISTICS FOR VARIOUS YAW DAMPING GAINS

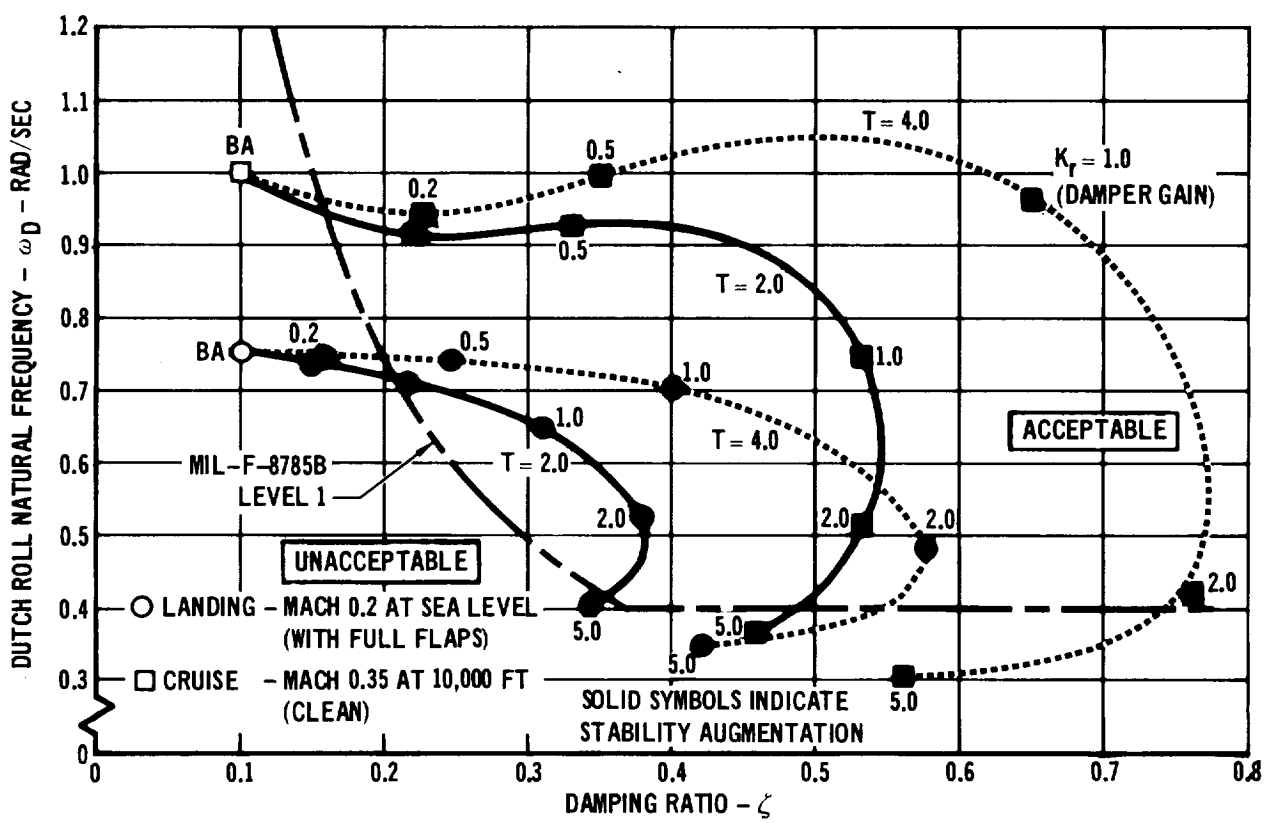

Figure 8.10–3

LATERAL DAMPING REQUIREMENTS AND HANDLING QUALITIES CHARACTERISTICS OF MSC ORBITER

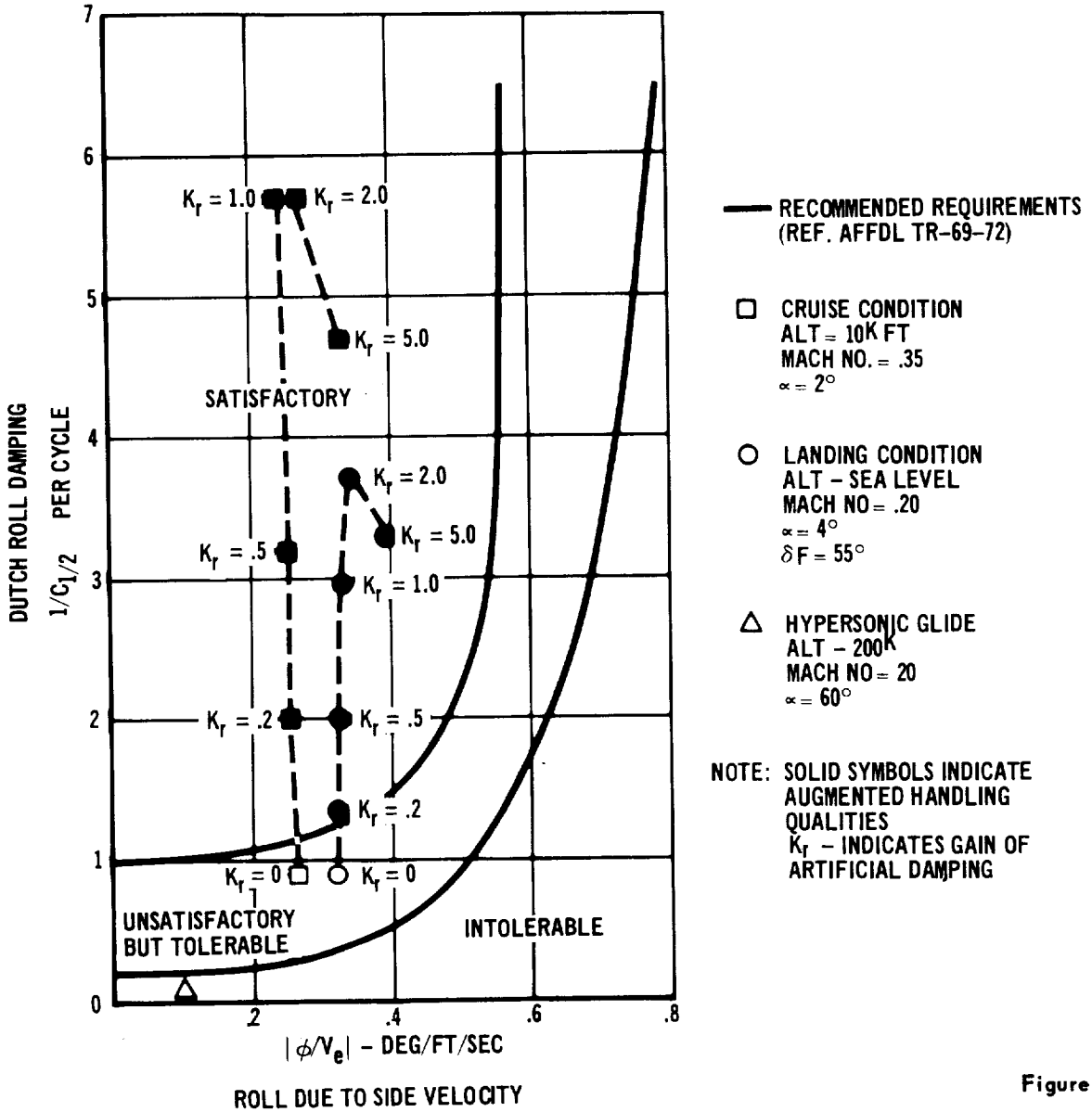

Figure 8.10-4

To improve the Dutch roll response, a Yaw Damper augmentation device was added to the Basic Airframe, using a cancelled Yaw Rate Gyro feedback to the rudder. Typical rudder actuator dynamics are included, represented by a 0.1 second lag. The rate gyro is mounted to the airframe. Figure 8.10-2 shows the block diagram of the Yaw Damper.

Values of damping and natural frequency for five values of loop gain K_r (degrees of rudder, per degree per second yaw rate) are plotted in Figure 8.10-3.

Canceller time constant T was set at 2.0 and 4.0 seconds. It can be seen that satisfactory values can be obtained for either time constant, although the best results are for the 4.0 second value. However, high values of T cause problems in turn coordination, and further study is required in selecting the optimum value of T.

Figure 8.10-4 shows satisfactory results of $1/C_{1/2}$ and $\emptyset/V_e$ using the augmented system for various values of the gain K_r and the time constant T of 2.0 seconds.

A fixed gain yaw damper can also be used, which is ideal from the standpoint of complexity and reliability. A value of K_r of approximately 1.0 degrees rudder per degree per second will give the best results.

8.10.3 Reentry Control - Control during hypersonic portion of the reentry phase is required to provide damping and bank angle modulation about the velocity vector. This type of reentry control was employed in both the Gemini and Apollo spacecrafts and preliminary studies indicate it can provide adequate control for the fixed wing configuration.

Figure 8.10-5 shows the transients responses resulting from a bank angle command. These transients were obtained from a six degree of freedom digital simulation at the indicated flight conditions. The responses indicate that the side slip angle remains less than three degrees for the indicated loop characteristics (h = 200,000 ft). Figure 8.10-6 presents the block diagram of the control loops. Damping is provided about the three rotational axes and the bank angle command is converted to a yaw command. The yaw command initiates the desired maneuver with the cross-feed of yaw rate into the roll rate channel providing the required coordination to achieve banking about the velocity vector.

TYPICAL RESPONSE TO BANK ANGLE COMMAND

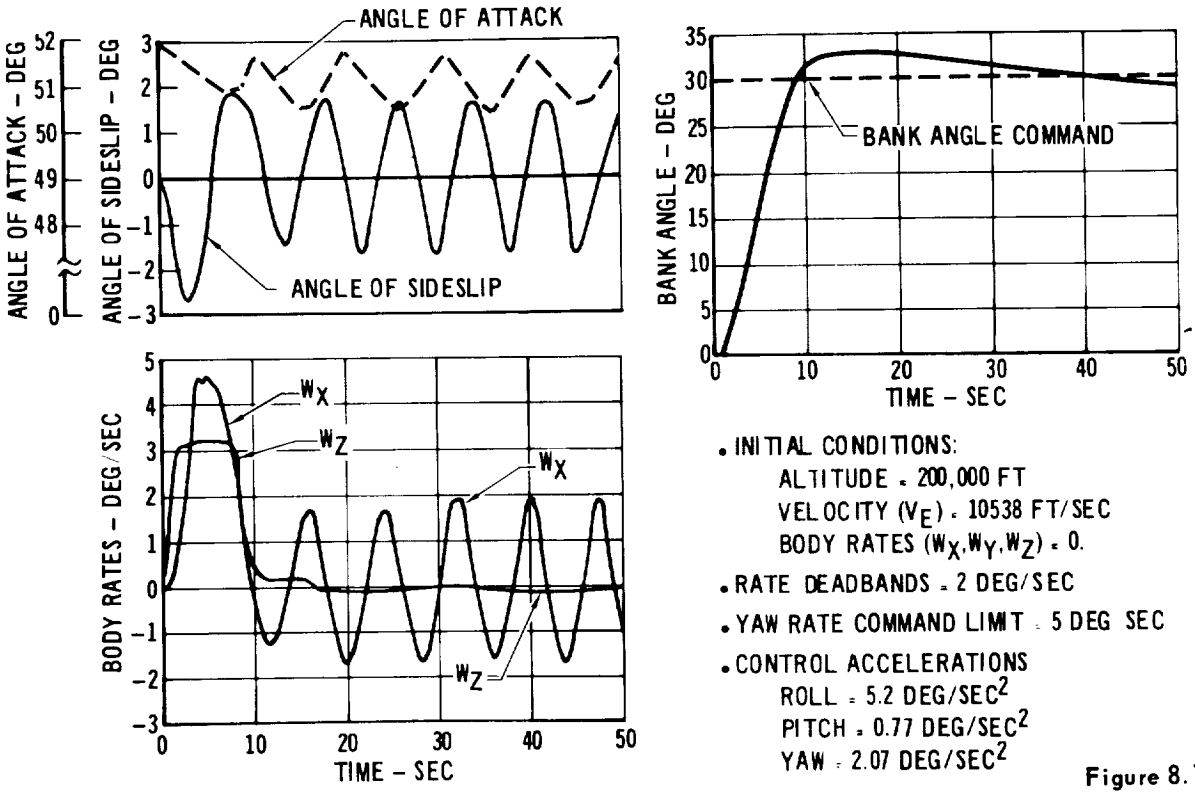

- INITIAL CONDITIONS:
  - ALTITUDE = 200,000 FT
  - VELOCITY (V_E) = 10538 FT/SEC
  - BODY RATES (W_X, W_Y, W_Z) = 0.
- RATE DEADBANDS = 2 DEG/SEC
- YAW RATE COMMAND LIMIT = 5 DEG SEC
- CONTROL ACCELERATIONS
  - ROLL = 5.2 DEG/SEC^2
  - PITCH = 0.77 DEG/SEC^2
  - YAW = 2.07 DEG/SEC^2

Figure 8.10–5

REENTRY CONTROL SYSTEM

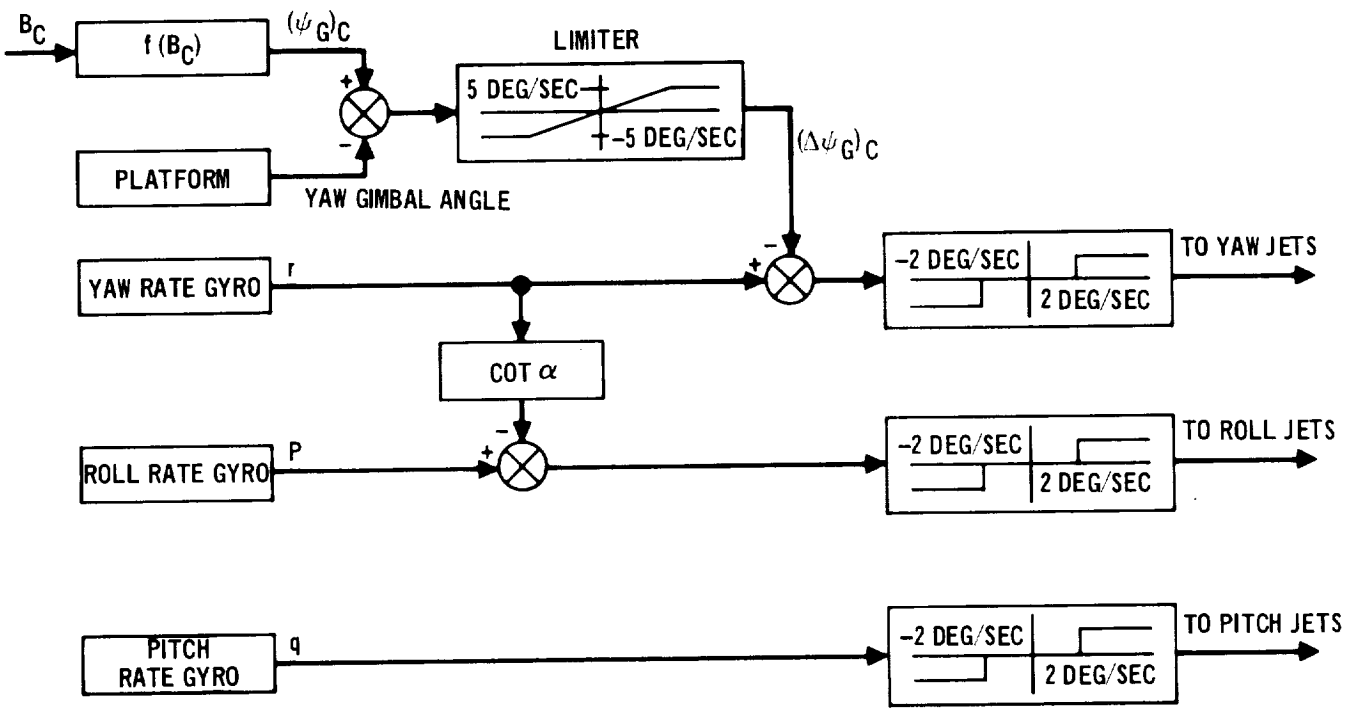

Figure 8.10–6

9.0 OPERATIONS, SAFETY & MAINTENANCE

9.1 Ground Operations - Consideration of ground operations requirements in the basic vehicle design is of greater importance than on any previous space program. The reusability of the space shuttle in a cost effective manner will be governed to a large degree by how well the operations requirements have been established.

A prime objective in developing the logistics vehicle system is to drastically reduce operating costs without sacrificing the level of confidence in system performance. To accomplish this, it is necessary to completely revise present methods of determining that a space vehicle is ready for launch.

It will also be necessary to greatly simplify the Ground Support Equipment (GSE) and the handling and servicing techniques if the objectives of a short (less than two weeks) turnaround period between landing and subsequent launch are to be met.

Close coordination of the activities in each phase of the turnaround will provide the continuity necessary to provide high confidence in the operation of the system. Some of the major factors considered that contribute to minimum turnaround are:

1. Decision to launch based on assessment of the system operation by the flight crew.
2. System operation during the mission controlled by the crew.
3. Post landing crew and on-board recording input of the system performance.
4. Adjusted or replaced equipment is tested to verify flight readiness during maintenance cycle.

9.1.1 Ground Checkout - On board checkout equipment designed to provide the flight crew with the information necessary for them to assess the performance of the system will eliminate the need for much of the gigantic-sized launch test teams.

On the Mercury, Gemini, and Apollo programs vast amounts of system performance data were presented on the displays for use of the subsystem specialist at the launch complex. Each generation spacecraft became more complex than its

predecessor and the support manpower increased accordingly. A gross indication of the rate of increase in program launch operations costs is presented in the comparison of the launch site staffing levels required by the spacecraft contractors:

Mercury (McDonnell-Douglas)	350
Gemini (McDonnell-Douglas)	650
Apollo (North American)	3,000

The recently successful launch of the Apollo 11 LM Ascent stage from the surface of the moon was accomplished through the decisions and actions of the two crewmen aboard. Only minimal consultation was made with Mission Control throughout the pre-launch preparation and launch phases. This was a giant step in the direction of autonomous operation of space vehicles and supports the proposed approach that space flight has matured to the point where it is completely within reason to rely upon the flight crew to perform launch and mission evaluation tests with minimal ground support.

9.1.2 Operational Techniques - Two major prelaunch operational concepts should be considered. These are:

- On-pad build-up - where each stage is transported separately to the launch pad and the vehicle is assembled and totally checked out on the pad.
- Pre-pad build-up - where the stages are mated and integrated tests conducted prior to being transported to the launch pad.

A detailed analysis is required taking into account such considerations as launch rates, facility requirements, operational life of program, turn-around-time and vehicle design before a confident operational concept selection can be made. However, based on current launch rates under consideration (10-100/yr) a short pad time would maintain the emphasis on low operating costs and make pre-pad build-up appear to be the most desirable mode of operations.

There are two prominent approaches to the pre-pad build-up concept which are:

- Vertical erection and pad transportation
- Horizontal mating and pad transportation.

Vertical erection would require large off-pad facilities. The existing Saturn V Vertical Assembly Building (VAB) and Mobile Launcher (ML), if available, can be modified to accommodate the space shuttle. This approach is illustrated in Figure 9.1-1

GROUND OPERATIONS
Erection on VAB

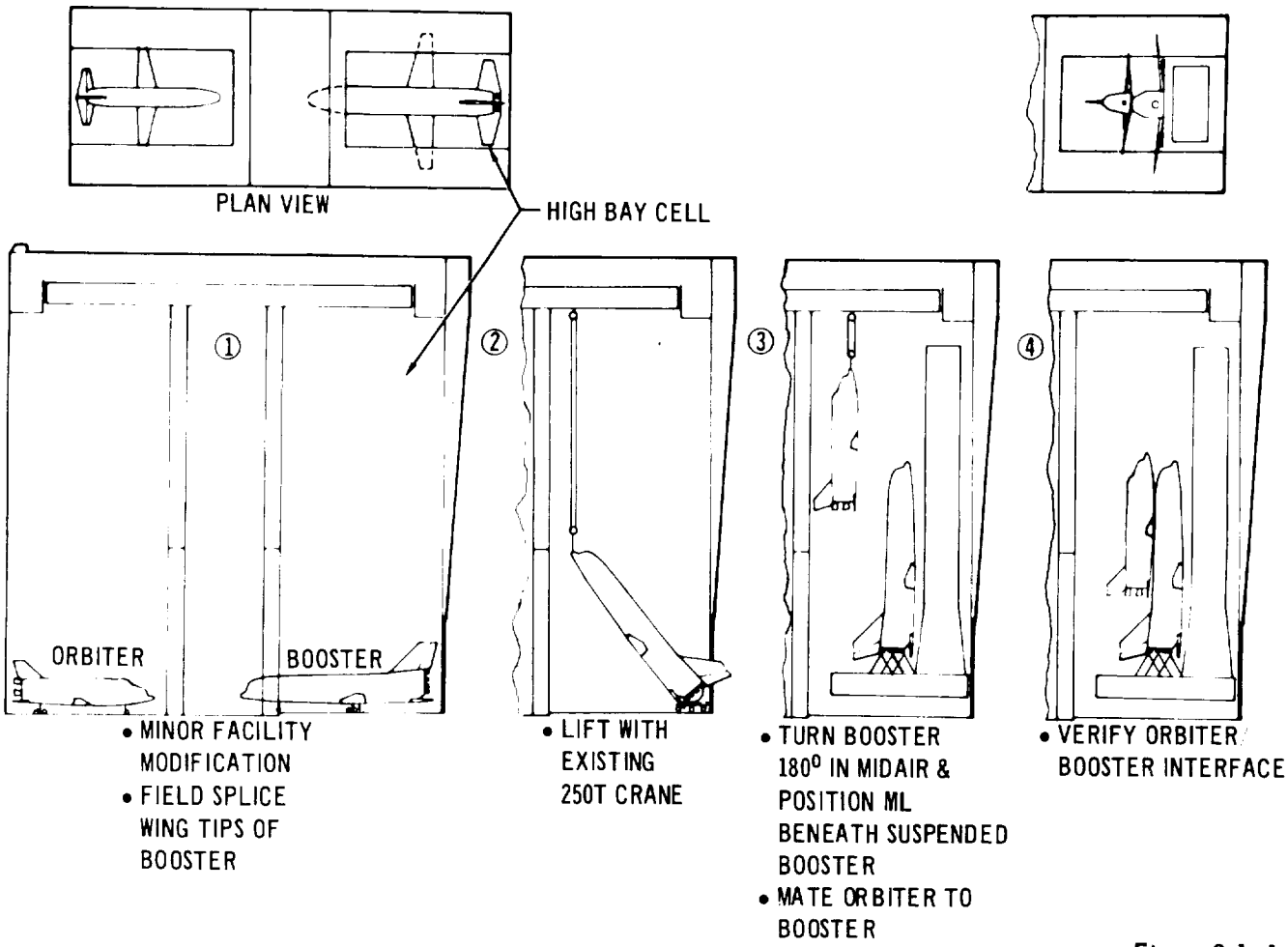

Figure 9.1-1

The horizontal mating technique will require new erection equipment and launch facilities. However, the horizontal attitude of the vehicle provides access advantages and both the mating and checkout activities can be accomplished in low ceiling buildings. Also transporting the assembled vehicle in the horizontal position is simpler and will permit use of landing gear support structure for transport loads. The possibility of using the booster main gear and a GSE auxiliary boggie at the nose gear location appears feasible. Figure 9.1-2 illustrates the horizontal concept with vertical erection occurring at the pad. A mobile erector/launcher, if feasible, would reduce pad-time and capital equipment out lay if many launch pads are required to meet projected launch rates.

GROUND OPERATIONS
Erection on Pad

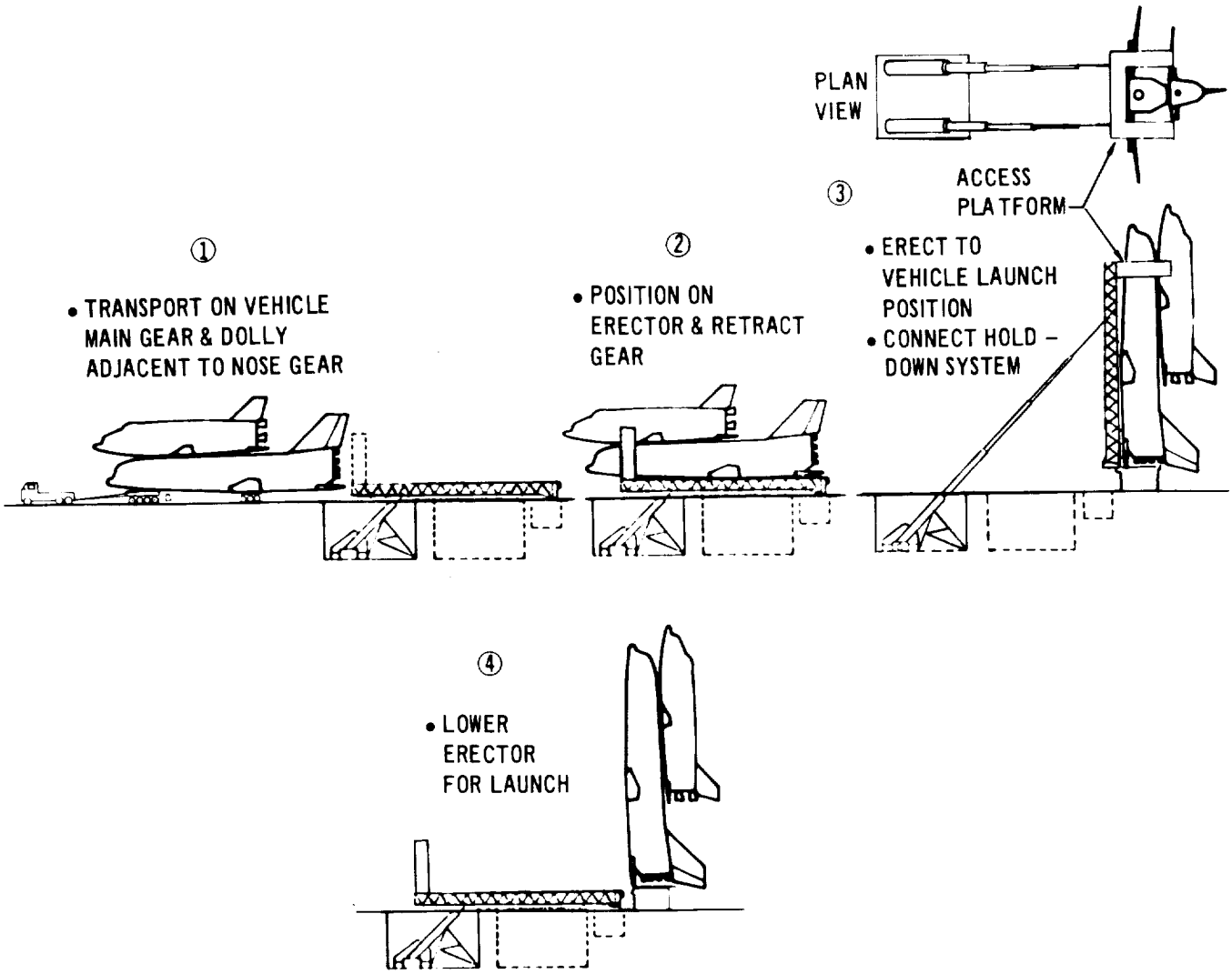

Figure 9.1-2

Assuming a pre-pad build-up/horizontal mating concept, Figure 9.1-3 shows activity sequence and time allocation for a twenty-four hour launch schedule commencing with preparation to move the mated vehicle to the pad and ending with lift-off. The total turn-around time (time from mission return to launch), which includes post landing, service/maintenance and pre-launch activities is estimated to be between ten and fourteen days.

GROUND OPERATIONS
Launch Operations Schedule

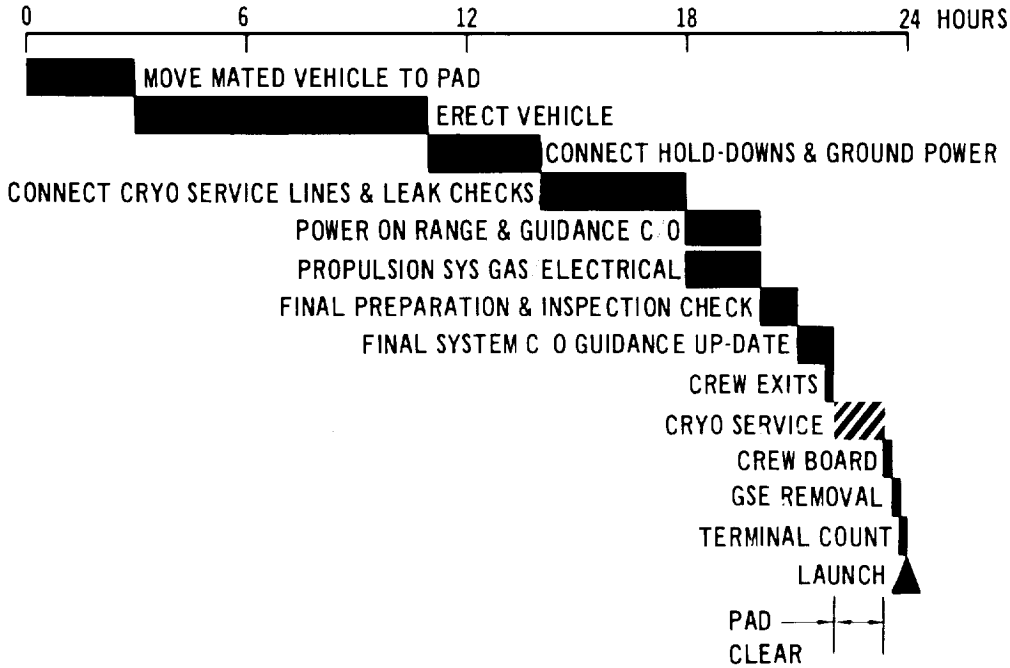

Figure 9.1-3

9.1.3 Facilities - A cursory examination of the existing launch facilities which could be considered for the space shuttle operation has been made. No attempt was made to determine the planned usages of these facilities during the time phasing of the shuttle system, but rather that it is feasible to consider their use for pre-launch and launch operations. Complexes 34 and 37 used for launching Saturn IB vehicles weighing 1.3M lbs. would require extensive modification to make them of use on the space shuttle program. Complex 39 offers the greatest advantage if the vertical erection approach to the pre-pad build-up concept is finally selected. The Vertical Assembly Bldg. (VAB) can be used as the maintenance and integrated test area. Use of the VAB will require field splicing the booster wing tips as shown in Figure 9.1-1 or possible rotation of the vehicle on the mobile launcher to prevent the wings from interfering with primary building structure. However vehicle rotation will still require modification of the high bay doors.

The pre-pad build-up "horizontal" approach will require new launch facilities and development of an erection system (fixed or mobile) capable of rotating the mated stages (without propellant).

A detailed study will be necessary to define prelaunch and launch criteria and prepare timelines before facility requirements and quantities can be

confidently identified. Besides checkout, assembly and/or erection, and launch facilities space shuttle stages will require a landing strip for mission return and initial ferry shipment from manufacturing facilities. To reduce ground transportation to a minimum the landing strip should be located close to the industrial area to permit stage towing.

9.1.4 Ground Support Equipment (GSE) - The following is a preliminary listing of major items and categories of GSE which will be required to support the Launch and Post Flight Operations.

a. Prime Mover (TUG) (for towing)
b. Electrical Power - External
c. Hydraulic Power - External
d. Pneumatic Service - External
e. EC/LSS Service - External
f. Galley Servicing Equipment
g. Sanitation Servicing Equipment
h. Engine Service Kits
i. Vehicle Access Equipment
j. Lubrication Equipment
k. Purge Equipment
l. Safety Equipment
m. Propellant Servicing Equipment
n. Erection and Mating Equipment
o. Cargo (Canister) Loading Equipment
p. Cargo (Canister) Transport Equipment
q. Rigging Equipment
r. Ground Telemetry Station
s. Ground Communication Station
t. Automatic Checkout Equipment
u. Pyrotechnic Handling and Checkout Equipment
v. System De-contamination and Cleaning Equipment

9.2 Maintenance - The maintenance of a reusable space vehicle requires an expanded philosophy over that of previous manned space vehicles. The reliability and confidence (verification) factors must be of the highest order obtainable as in the past. In addition, the design must provide the keeping or bettering these levels over many missions and an extended time span. This to be in a cost and time frame compatible with the basic program objectives.

The above qualities will be achieved by vehicle and system design stressing the following features:

Reliability as it relates to maintenance involves connectors, unions and fasteners designed for handling and extended use. Interchangeable and replaceable units designed to fit only in the correct configuration.

Verifiableness - The ease of verifing the condition of a part or a system; or the condition of service. Built in test equipment for Avionics; sight gauges in plain sight; indicators on adjustment or settings; all desinged to reduce or eliminate trouble shooting on the vehicle.

Accessibility - All pad replacable units can be removed and replaced from a comfortable work station. No components removed or system connections broken other than those fastened to the unit being changed. Avionics will be mounted on racks accessible from adaquate work stations reachable in flight.

Simplicity - All maintenance operations are reviewed for the simplest hardware and operation. Design will be based on the possibility that critical functions may be performed during conditions of personal or operational stress.

In conjunction with the above the maintenance technique of inspection, test and correct as necessary will be applied. This concept maintains that repairs, replacements, or overhauls are most effective if application is based on knowledge rather than on arbitrary schedules. It does not suggest that scheduled maintenance should be completely eliminated. High speed rotation devices, such as engines, pumps, and some types of electrical machinery, and extreme heat concentrated items, such as vehicle leading edges, shingles, and engine nozzles may require scheduled maintnenace. Premature failures resulting from overchecking by limiting the component and subsystem operating checks are minimized. Discrepanices will be noted by the flight crew and/or recorded on the onboard checkout system. These discrepancies will be scheduled into the vehicle maintenance turnaround schedule.

Fault isolation analysis is programmed into the onboard checkout system and provides a tool for short down time troubleshooting maintenance to isolate to a single line replaceable unit.

The maintenance level at the launch and landing facility is at the Line Replaceable Unit (LRU) level. LRU's will be removed and replaced and the malfunctioning unit will be sent back to the manufacturer for repair. This concept limits the requirements for a repair facility, trained personnel, and Aerospace Ground Equipment (AGE) at the launch and landing facility.

Major ground servicing and maintenance access points are located in Figure 9.2-1 for both stages of the space shuttle. Access to on-board equipment from within the vehicle is given special consideration to minimize down-time and permit crew replacement of components during the mission

GROUND SERVICING AND ACCESS PROVISIONS

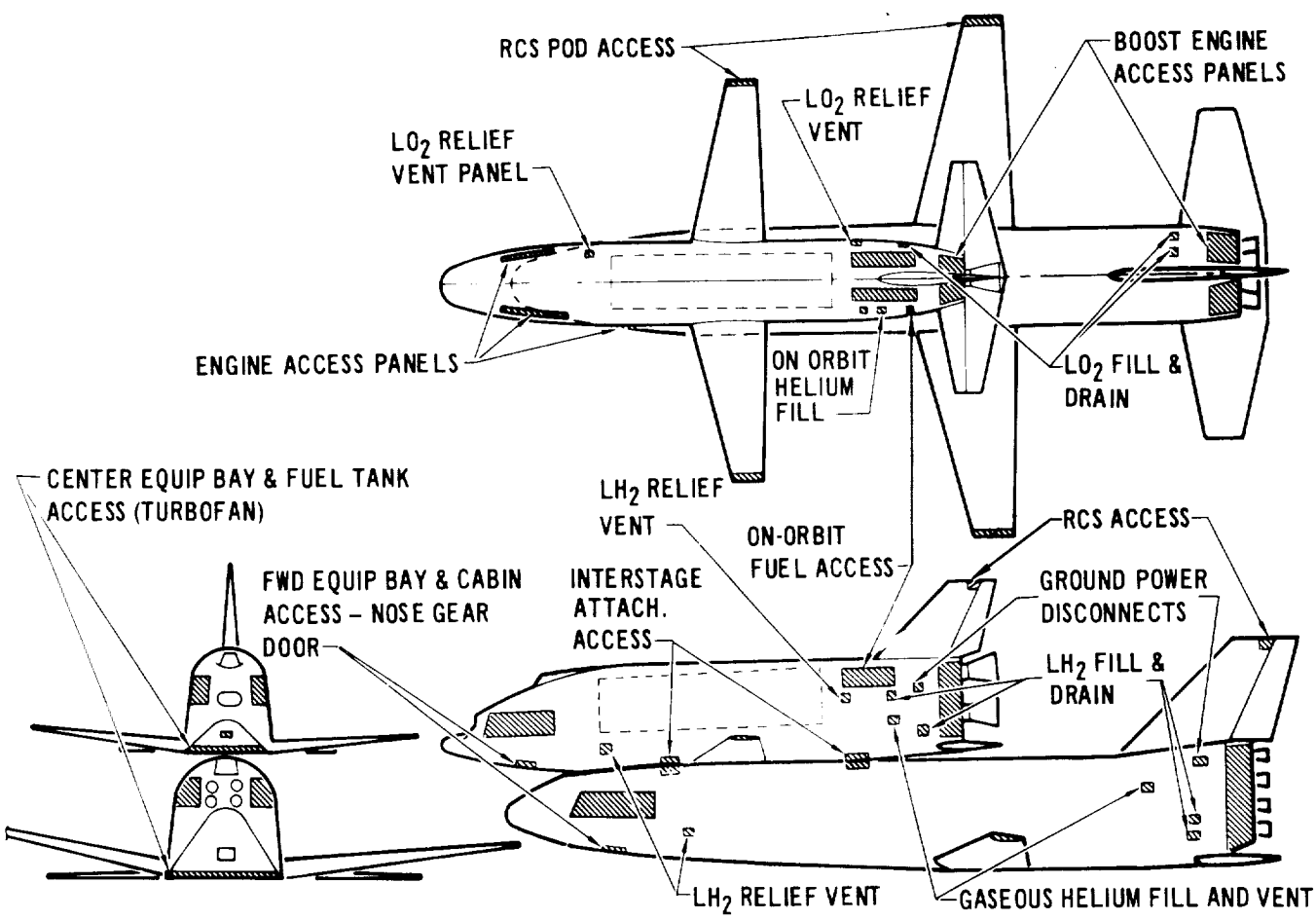

Figure 9.2-1

9.3 Safety Analysis - A qualitative safety assessment has been made of the subsystem designs and operational requirements of the baseline spacecraft vehicle. A preliminary identification of catastrophic and critical operational hazards for the candidate booster and orbiter vehicles was prepared.

As a part of the analysis, a comparison of safety considerations for a commercial transport and the spacecraft was made, based on a typical mission for each type system. The correlation between systems is close except for the differences in launch attitudes and the on-orbit and entry phase environments that the orbiter experiences. The comparison of the safety provisions for both systems in their normal operational mode is shown in Figure 9.3-1.

Some key points followed during the safety analysis were; (1) averting the cascading effect of rocket engine/fuel system failures, (2) the elimination of abort-forcing escape-precluding failures, and (3) providing for ample warning time in the event of potentially catastrophic failures.

9.3.1 Goals and Guidelines - The crew-safety goal arbitrarily established for the study is .999 or one loss per 1000 missions. This goal can be attained with current safety-of-operations criteria applied during the design and planning stage. In qualitative terms, the safety level for the spacecraft must approach that level exhibited by commercial transports. To accomplish this, several guidelines have been established and followed during the preliminary safety analysis.

- Safety standards to be commensurate with FAA regulations.
- Identified hazards will be eliminated or reduced and controlled by use of current MDC commercial aircraft design practices and airline procedures.
- Provisions are made for rapid on-pad egress and escape paths for crew and passengers.
- Design must provide for rapid dump/usage of fuel following ascent phase abort.
- Separation devices, such as pyrotechnics, mechanical pistons, hydraulic or electrical actuators and releases, are fully redundant and easily inspected or functionally checked prior to a mission.
- Dual, triple and quad-redundancy techniques are employed in design, dependent upon criticality of function.
- A single failure should not cause mission abort and preclude escape.
- An inadvertant abort initiation will not result from a single failure.

AIRLINE VS SPACECRAFT SAFETY CONSIDERATIONS

AIRLINE OPERATIONS	SPACECRAFT PROVISIONS
1. GROUND OPERATIONS – EQUIPMENT CHECKOUT SYSTEM PERFORMANCE MONITORING MALFUNCTION DETECTION SYSTEM CREW(NORMAL) EGRESS – NORMAL PASSENGER EGRESS EMERGENCY ESCAPE (CREW) & PASSENGERS, HATCHES, CHUTES, & STEPS "SINGLE-SWITCH" SHUTDOWN CAPABILITY FIRE-FIGHTING EQUIPMENT AVAILABILITY –EXPLOSION PROTECTION PROVIDED GROUND CREW	1. PRE-LAUNCH FUNCTIONAL CHECKOUT – ALL SUBSYSTEMS ONBOARD CHECKOUT SUBSYSTEM MDS NORMAL TOWER EGRESS PROVISIONS SLIDE WIRE – ELEVATOR – MULTIPLE HATCHES SWING-ARM PICKUP COMPARIBLE CAPABILITY – ABORT SWITCH GROUND BASED EQUIPMENT BUNKERS AND VAULTS PROVIDED AT LAUNCH SITE
2. TAKE-OFF & CLIMB-OUT – DEVELOP ENGINE THRUST PRIOR TO BRAKE RELEASE ABORT PRIOR TO LIFT-OFF – BRAKE & SHUTDOWN ABORT AFTER LIFT-OFF – GO-AROUND, ALTERNATE SITE LANDING ENGINE-OUT CAPABILITY, TAKE-OFF, CLIMB W/O FLAPS REDUNDANT FLIGHT CONTROLS & PILOTS REDUNDANT COMMUNICATION LINKS REDUNDANT GUIDANCE INSTRUMENTATION GROUND-BASED FLIGHT STATUS CONFIRMATION FUEL DUMP PROVISIONS STRUCTURAL INTEGRITY OF FUSELAGE DURING CRASH FUEL & HYDRAULIC SUPPLIES LOCATED REMOTE FROM PASSENGER COMPARTMENT FOR WHEELS-UP LANDING CABIN PRESSURE & O_2 SUPPLY – INDIVIDUAL O_2 MASKS REDUNDANT POWER SUPPLIES RESTRAINT SYSTEM PROVIDED (CREW & PASSENGER)	2. LAUNCH/ASCENT (ROCKET ENGINES) HOLD-DOWN CAPABILITY ON PAD ENGINE SHUTDOWN & EGRESS FROM VEHICLE SEPARATION-INTACT ABORT MODE – BOTH STAGES ONE ENGINE OUT – CONTINUE MISSION TWO ENGINES OUT – ABORT MISSION TRIPLE REDUNDANT AVIONICS – EITHER CREWMAN TRIPLE REDUNDANT AVIONICS TRIPLE REDUNDANT AVIONICS GROUND COMMUNICATIONS AVAILABLE – TRACKING & VOICE DESIGN SAFETY MARGIN ADEQUATE – CONSTRUCTION TECHNIQUE RINGS & LONGERON VOLATILE STORES LOCATED EXTERNAL TO CREW & PASSENGER COMPARTMENT REDUNDANT O_2 SUPPLIES – SPACE SUITS AVAILABLE REDUNDANT BATTERIES, BUSSES, WIRING, & FUEL CELL SECTION RESTRAINT STRAPS, CONTOURED SEATS/COUCHES PROVIDED
3. INFLIGHT – ENGINE-OUT CRUISE CAPABILITY – REDUNDANT FLIGHT INSTRUMENTS – REDUNDANT FLIGHT CONTROLS & PILOTS GROUND STATION DIRECTIONAL AIDS – TRAFFIC CONTROL FUEL-TANKS SEPARATED (CROSS-FEED PROVIDED) ALTERNATE BASES FOR EMERGENCY LANDINGS REDUNDANT ENGINE – DRIVEN GENERATORS, FUEL PUMPS, ETC. ALTERNATE PATHS OF COMMUNICATION SYSTEM PERFORMANCE MONITORING –	3. ON-ORBIT & SUB-ORBITAL MANEUVERING ENGINE-OUT CAPABILITY TRI-REDUNDANT INSTRUMENTATION COMPARABLE TO COMMERCIAL TRANSPORT GROUND CONTROL & NAVIGATIONAL AIDS – TRAFFIC CONTROL ALTERNATE LANDING SITES – UNDER STUDY FUEL PUMPS CONSIDERED AS PART OF ROCKET ENGINE INTERNAL REDUNDANCY PROVIDED S-BAND COMM. SYSTEM & UHF & VHF SYSTEMS ON-BOARD CHECKOUT PLUS REDUNDANT INSTRUMENTS EJECTION SEATS OR ESCAPE CAPSULE PROVIDED FOR CREW RDT&E FLIGHTS
4. APPROACH & LANDING ENGINE THROTTLING – GLIDE EXTENSION GLIDE EXTENSION – FLAPS – SPOILERS FUEL SUPPLIED FOR GO-AROUND & OR ALTERNATE BASE SELECTOR GROUND CONTROL OF GLIDE ANGLE & PATH DIRECTION BRAKING – THRUST REVERSERS STEERABLE NOSE WHEEL – LOCK UNLOCK EMERGENCY EGRESS – HATCHES, DOORS, STEP, CHUTE	4. APPROACH & LANDING ENGINE (JET) THROTTLING FOR GLIDE EXTENSION AERO LIFT PROVIDED BY VEHICLE SHAPE WHEEL BRAKING AND DRAG CHUTE COMPARABLE STEERING TO COMMERCIAL VEHICLES FUEL SUPPLY AVAILABLE FOR GO-AROUND GROUND CONTROL FOR LANDING ASSIST EMERGENCY GROUND ESCAPE PATHS PROVIDED QUICK OPENING HATCHES, DOORS, STEPS & CHUTES

Figure 9.3–1

- Explosives and hi-energy storage facilities will be located remotely from crew compartments.
- Abort, escape and recovery paths will be available to crew members at all times.

9.3.2 Design Evaluation for Safety - The evaluation of available subsystem designs was completed in conjunction with the inspection of the hazardous events that must occur during the normal mission.

A gross failure analysis was made to identify the major modes of failure of the operating subsystems for each mission phase. The impact of the failure on mission success or crew safety and the design methods for controlling or minimizing the effect of the failure resulting from this analysis are summarized in Figure 9.3-2.

Singe point hazard areas are identified in Figure 9.3-3 to pin-point critical components of the operating subsystems. For example, the loss of electrical power emergency and the identification of the critical components item (5) of Figure 9.3-3, provide a basis for design correction action options shown in Figure 9.3-4.

GROSS FAILURE ANALYSIS

MISSION EVENT	MAJOR SUBSYSTEM FUNCTIONS 1ST STAGE	2ND STAGE	MAJOR MODE OF FAILURE	IMPACT OF FAILURE ON MISSION/SAFETY	METHOD OF CONTROL OR MINIMIZING EFFECT
1. PRE-LAUNCH	ECLS	ECLS	UNCONTROLLED LEAKAGE-CABIN ATMOSPHERE CONTAMINATION	SCRUB MISSION NORMAL EGRESS	MONITOR PRESSURE DURING PAD OPERATIONS LOCATE HI-PRESSURE BOTTLES OUT OF CREW COMPARTMENT
SYSTEM CHECKOUT (BOTH VEHICLES)	G & N ELECTRONICS		LOSS OF VEHICLE CONTROL SIGNALS	SCRUB MISSION NORMAL EGRESS	REDUNDANT SYSTEMS IN EACH VEHICLE
	ELECTRICAL	ELECTRICAL	POWER INTERRUPTION – POWER LOSS – FIRE	SCRUB MISSION	RAPID EXIT PURGE CABIN WITH INERT GAS
LOAD CARGO	N/A	AGE AND MECHANICAL LOADING DEVICE	CARGO DROPPED – DAMAGE TO S/C EXTERIOR – RADIOACTIVE CARGO HAZARDS	HOLD LAUNCH DETERMINE EXTENT OF DAMAGE – SCRUB MISSION	POSITIVE MEANS OF CARGO HANDLING – PROTECT S/C DURING LOADING – PROVIDE RADIATION PROTECTION OF S/C AND OCCUPANTS
FUELING OF S/C (BOTH STAGES)	FUEL AND OXIDIZER UMBILICALS – FUEL DUMPING AT DISCONNECTS		LEAKAGE – FAILURE TO SHUTOFF – AUTOGENOUS IGNITION OF FUEL	MISSION HOLD CRITICAL EVENT COULD DESTROY BOTH VEHICLES	STANDARD FUELING PROCEDURES – PURGE EQUIPMENT AVAILABLE AT LAUNCH SITE – CREW EGRESS AND ESCAPE MODES ACTIVATED
CREW BOARDING	CABIN ENVIRONMENT FINAL SYSTEMS CHECK		FAILURE TO SECURE HATCHES	HOLD LAUNCH – DEFUEL AND REPAIR LATCH MECHANISM	
IGNITION	PROPULSION BOOST ENGINES		FAILURE TO IGNITE – TO DEVELOP FULL THRUST	ABORT MISSION-ENGINE(S) SHUTDOWN NORMAL EGRESS	REDUNDANT PATHS PROVIDED FOR ENGINE IGNITION – HOLD-DOWN MODE – SAFE VEHICLE
2. LAUNCH/ASCENT INITIAL BOOST	PROPULSION ENGINES		LOSS OF ENGINE LOW THRUST LEVEL	CONTINUE MISSION – PREPARE TO SEPARATE AND ORBIT STAGE II AND RETURN TO LANDING SITE WITH STAGE I	CAPABLE OF SUCCESSFUL LAUNCH WITH AN ENGINE OUT – EACH ENGINE HAS THRUST OVERSPEED CAPABILITY
HOLD DOWN RELEASE	LAUNCH OPERATIONS AGE		HOLD DOWN RELEASE FAILS TO RELEASE	ENGINE SHUTDOWN	REDUNDANT RELEASE DESIGN
GUIDANCE AND CONTROL OF COMBINED VEHICLES AND SEPARATED VEHICLES	G & C (AVIONICS)		IMU MALFUNCTION PLATFORM DRIFT – LOSS OF SIGNAL TO COMPUTER	LOSS OF VEHICLE CONTROL IMPROPER ORBIT INSERTION	TRI-REDUNDANT AVIONICS PROVIDED IN EACH VEHICLE CROSS-OVER LINK BETWEEN VEHICLES
	ENGINES GIMBALLING		HARD OVER CONTROL PROBLEMS – FAILURE OF ENGINES TO REACT	LOSS OF VEHICLE CONTROL INTACT ABORT AFTER SEPARATION	REDUNDANT CONTROL SIGNALS FROM BOTH VEHICLES REDUNDANT CAPABILITY FOR CONTROL IN EACH SEPARATE VEHICLE
SEPARATION OF STAGES (1) AMD (2)	HYDRAULIC SUBSYSTEM, PYROTECHNICS AND SEQUENTIALS		FAILURE TO ACTUATE PIN PULLERS, THRUSTER MALFUNCTION HANG UP OF LINES, CABLES, STRUCTURE	CATASTROPHIC EVENT EJECT*	MULTIPLE REDUNDANT PATHS FOR SEPARATION DEVICES – REDUNDANT INITIATORS FOR THRUSTERS – EJECT FOR CREW SAFETY
	MECHANICAL RELEASE		BINDING, SEIZING MISALIGNMENT	CATASTROPHIC IF SEPARATION NOT COMPLETED	POSITIVE – ACTING RELEASE DESIGN – BACKUP SPRINGS
COMMUNICATIONS BOTH VEHICLES AFTER SEPARATION	GROUND CONTACT – BOTH STAGES COMMUNICATION WITH SECOND VEHICLE		SIGNAL LOSS FROM GROUND STATION INABILITY TO RECEIVE INFORMATION FROM OTHER VEHICLE	MINIMUM IMPACT ON MISSION SUCCESS DUE TO MULTIPLE REDUNDANT PATHS	MULTIPLE REDUNDANCY PROVIDED BOTH ACTIVE AND FUNCTIONAL PATHS AUTONOMOUS CAPABILITY
PROVISION OF BREATHABLE ATMOSPHERE & TEMPERATURE CONTROL IN CREW AND PASSENGER COMPARTMENTS – ECLS	O_2 SUPPLY AND CABIN TEMPERATURE CONTROL		LOSS OF O_2 SUPPLY (REDUCED PRESSURE)	FIRST STAGE – MINIMAL EFFECT – RETURN TO BASE SECOND STAGE – DETERMINE URGENCY OF LOSS CONTINUE MISSION OR ABORT	REDUNDANT O_2 SUPPLIES AVAILABLE REDUNDANT O_2 SUPPLIES AVAILABLE
3. ORBIT MANEUVERING STAGE II	N/A	ATTITUDE CONTROL ELECTRONICS AND THRUSTERS	FAILURE OF ATTITUDE CONTROL – ELECTRONICS TO PROPERLY SEQUENCE THRUSTERS	INABILITY TO MAINTAIN PROPER ATTITUDE – LOSS OF FIX ON TARGET	MANUAL OVERRIDE TO CONTROL – THRUSTER REDUNDANCY PROVIDED
		FUEL/ OXIDIZER SUPPLY SYSTEMS	EXCESSIVE LEAKAGE TANK OR LINE RUPTURE	ABORT MISSION – SWITCH TO ALTERNATE SUPPLY FOR SAFETY-ISOLATE LEAKAGE	REDUNDANT SUPPLY SOURCES AND REDUNDANT LINES TUN ON OPPOSITE SIDES OF THE FUSELAGE

*EJECTION SEATS OR POD ESCAPE PROVIDED ON RDT&E FLIGHTS ONLY!

Figure 9.3-2

FOLDOUT FRAME 1

FOLDOUT FRAME 2

GROSS FAILURE ANALYSIS (Continued)

MISSION EVENT	MAJOR SUBSYSTEM FUNCTIONS 1ST STAGE	2ND STAGE	MAJOR MODE OF FAILURE	IMPACT OF FAILURE ON MISSION/SAFETY	METHOD OF CONTROL OR MINIMIZING EFFECT
		CABIN ATMOSPHERE AND TEMPERATURE CONTROL	LOSS OF CABIN PRESSURE BY FLOW RESTRICTION – RUPTURE OF CABIN WALLS – PRESSURE VALVE MALFUNCTION	PREPARE TO ABORT MISSION DETERMINE EXTENT OF MALFUNCTION AND ACT ACCORDINGLY	SECONDARY O_2 SUPPLY AVAILABLE EMERGENCY SUITS AVAILABLE TO CREW
4. DE-ORBIT STAGE II	N/A	ATTITUDE HOLD FOR RETRO	ATTITUDE CONTROL LOSS – DUE TO ELECTRONICS FAILURE	COULD BE CATASTROPHIC	REDUNDANT ACS PACKAGES PLUS MANUAL BACKUP FOR CONTROL
			THRUSTER MISFIRING FAILURE TO RETRO AT PROPER TIME OR ATTITUDE	PROLONGED ENTRY PERIOD – MISS ENTRY WINDOW FOR RECOVERABLE LANDING AT PLANNED SITE	MANUAL CONTROL BACK-UP TO REDUNDANT ELECTRONICS
	N/A	RETRO MOTORS FIRE	FAILURE TO FIRE AT REQUIRED THRUST FUEL EXPENDED	PROLONGED ENTRY PERIOD – MISS ENTRY WINDOW FOR RECOVERABLE LANDING AT PLANNED SITE	FUNCTIONAL REDUNDANCY PROVIDED IN ENGINES AND CONTROLS RESERVE FUEL SUPPLY PROVIDED FOR RETRO ONLY
5. CRUISE TRANSITION	ENGINE IGNITION		FAILS TO TURN-OVER FUEL LINE RESTRICTION	LOSS OF S/C POSSIBLE LOSS OF CRUISE AND GO-AROUND CAPABILITY	AIR START WITH CARTRIDGE BACKUP
(BOTH STAGES)	LANDING GEAR EXTENSION		DOORS FAIL TO OPEN LOSS OF HYDRAULIC ACTUATOR FOR GEAR EXTENSION	S/C DAMAGE MISSION SUCCESS DEGRADED	REDUNDANT ACTUATORS FOR DOORS AND GEAR
			GEAR FAILS TO LOCK DOWN	LOSS OF CREW POSSIBLE – S/C LOSS	PYRO BACK UP FOR DOOR REMOVAL
6. LANDING (BOTH STAGES)	ATTAIN PLANNED LANDING AREA		FAILURE TO REACH PLANNED LANDING SITE	HARD LANDING ON UNPREPARED SURFACE	SUBSONIC CRUISE CAPABILITY – ALTERNATE SITES PROVIDED
	LANDING GEAR ACTUATED		LANDING GEAR HANG UP OR BUCKLES UNDER LOAD	EXTENDS REFURBISHMENT TIME – DAMAGE TO S/C	CRASH WORTHINESS OF S/C DESIGN
	FLIGHT CONTROLS		HYDRAULIC ACTUATION FAILS – BINDING, SEIZING	DEGRADED RELIABILITY MOMENTARY CONTROL CONDITION	QUAD-REDUNDANT CONTROLS ALL AXIS – FLY-BY-WIRE CAPABILITY
	INSTRUMENTATION		ALTIMETER, DIRECTIONAL INDICATION, BLIND LANDING	DEGRADED MISSION SUCCESS	GROUND CONTROL AS AID TO LANDING AVAILABLE
	COMMUNICATIONS		LOSS OF VOICE AND BEACONS	DEGRADED MISSION SUCCESS	REDUNDANT PATHS
	TOUCHDOWN		LAND SHORT OR LONG ON RUNWAY – HARD IMPACT	DEGRADED MISSION SUCCESS JEOPARDIZE SAFETY OF CREW	GO AROUND CAPABILITY OR GLIDE EXTENSION USING JET ENGINES
	LANDING ROLL		VEER OFF RUNWAY	S/C DAMAGE	ENGINE STEERING DURING ROLL – BRAKING PROVIDED

FOLDOUT FRAME 1
FOLDOUT FRAME 2

CRITICAL COMPONENTS IDENTIFICATION

EMERGENCY TYPE	(CONTRIBUTING SUBSYSTEMS)	PRIMARY CAUSE OF EMERGENCY	CRITICAL COMPONENTS REQUIRING DESIGN CONCERN
1) FIRE	ELECTRICAL POWER	• ELECTRICAL ARCING DURING SWITCHING, SHORTS, OPEN WIRES	• WIRING, BATTERIES, BUSSES, SWITCHES & POWER CONSUMING DEVICES
	ECLSS	• SUPPORTS COMBUSTION BY LEAKAGE OR NORMAL CABIN O_2 SUPPLY	• O_2 SUPPLY TANKS SHUT-OFF VALVES & PLUMBING
2) NON-HABITABLE ENVIRONMENT	ECLS	• LOSS OF O_2 SUPPLY • LOSS OF PRESSURE & TEMPERATURE & HUMIDITY CONTROL • ATMOSPHERE CONTAMINATION • SOLAR RADIATION	• O_2 TANKS, VALVES, PLUMBING • TANKS, VALVES, PLUMBING, COLD PLATES, BOILERS, FILTERS • FILTERS, EMERGENCY O_2 SUPPLY • STRUCTURAL SHIELDING, LOCATION OF PERSONNEL
3) EXPLOSION	ALL PROPULSION SUBSYSTEM	• FUEL TANK OR OXIDIZER TANK RUPTURE, RUPTURE, PLUMBING LEAKAGE • FUEL & OXIDIZER TRANSFER	• SUPPLY TANKS, VALVES, PLUMBING, JOINTS • TRANSFER HOSES, LINES, VALVES, PUMPS
	ECLS	• SUPPLY TANK RUPTURE, EXCESSIVE HI-PRESSURE LEAKAGE	• TANKS, VALVES, LINES
4) LOSS OF ATTITUDE CONTROL	ATTITUDE CONTROL ELECTRONICS	• LOSS OF REFERENCE • POWER FAILURE	• GYROS, IMU, COMPUTER, DISPLAYS • POWER SUPPLY, WIRING BUSS CONNECTIONS
	ATTITUDE CONTROL & MANEUVER PROPULSION	• THRUSTER FAILURE • FUEL DEPLETION	• THRUSTER, VALVES, PLUMBING • TANKS, PLUMBING, S/O VALVES
	BOOST PROPULSION	• ENGINE FAILURES • LO-THRUST DEVELOPED • HARD-OVER GIMBALING	• FUEL PUMPS, COMPRESSOR BEARINGS & BLADES • FUEL CONTROL, NOZZLE CONTROL, THROTTLING • GIMBAL ACTUATORS, MECHANICAL LINKAGES
5) LOSS OF ELECTRICAL POWER	ELECTRICAL POWER SUPPLY & DISTRIBUTION	• BATTERY FAILURE • SHORT CIRCUIT • LOSS OF FUEL CELL GAS SUPPLIES • CONTROL RELAY OPEN	• BATTERIES, CONNECTORS, POWER BUSS RELAYS • SWITCHES, WIRING, CONNECTORS, INVERTERS • TANKS, PLUMBING, CELLS
6) MECHANICAL SYSTEMS MALFUNCTION	SEPARATION SYSTEM	• BINDING OF LINKAGES • GAS GENERATOR FAILURE	• MECHANICAL ATTACH POINTS, BEARING SURFACES • GAS GENERATORS, BACK-UP SPRINGS
	HATCH LATCHING	• FAILURE TO LATCH & SEAL CREW COMPARTMENT DURING ASCENT PRESSURE CHANGE – FAILURE TO UNLATCH IN EMERGENCY	• LATCHES, SEALS, LOCKING MECHANISMS, DOORS, PORTS, SERVICE HATCHES, GEAR DOORS
	LANDING GEAR EXTENSION	• LOSS OF HYDRAULIC POWER • FAILURE OF GEAR TO POSITION & LOCK	• HYDRAULIC SUPPLY, PLUMBING, ACTUATORS, SEALS • DOWNLOCK MECHANISM, PIVOT BEARINGS
	CONTROL SURFACES	• BINDING/SEIZING OF SURFACE • LOSS OF CONTROL SURFACE THRU HI-TEMPERATURE EXPOSURE	• BEARINGS, SHAFTS, LINKAGES, ACTUATORS • THERMAL PROTECTION AND STRUCTURE

Figure 9.3–3

CORRECTIVE ACTION OPTIONS FOR EPS FAILURES ON ORBITER VEHICLE

Options For Corrective Action

FAILURE TYPE	ASCENT	RETURN PHASING	DESCENT
LOSS OF MAIN BUS POWER	• SWITCH TO REDUNDANT BUS	• SWITCH TO REDUNDANT BUS. DEFER RETROGRADE FOR A MORE DESIRABLE POINT WITHIN THE EXISTING ORBIT.	• ISOLATE DEFECTIVE CIRCUIT • ISOLATE DEFECTIVE ELEMENT AND CONTINUE NORMAL OPERATION WITH SHORTENED POSTLANDING CAPABILITY
LOSS OF MAIN BUS POWER	• SWITCH TO REDUNDANT ESSENTIAL BUS	• SWITCH TO REDUNDANT BUS. DEFER RETROGRADE FOR A MORE DESIRABLE POINT WITHIN THE EXISTING ORBIT	• ISOLATE DEFECTIVE CIRCUIT • ISOLATE DEFECTIVE ELEMENT AND CONTINUE NORMAL OPERATION WITH SHORTENED POSTLANDING CAPABILITY
LOSS OF OUT-PUT OF FUEL CELL	• ISOLATE DEFECTIVE UNITS AND CONTINUE ASCENT • ABORT MISSION FOR DE-SIRABLE RETURN TRAJECTORY.	• ISOLATE DEFECTIVE UNITS AND CONTINUE RETURN PHASING	• FUEL CELLS USED DURING THIS PERIOD BACKED-UP WITH BATTERIES ON LINE.

Figure 9.3-4

9.3.3 Critical Subsystem Identification - A most hazardous required function in the normal shuttle mission is the separation of the two stages.

For this study, the aerodynamic interface between the two bodies and firm requirements for propulsion during the separation have not been clearly defined. Once these problems have been analyzed, further, the event may become a state-of-the-art function that has been accomplished with slight variation on many manned and unmanned spacecraft flights.

The structural attach points are assumed to have a reliability of unity, i.e., they are able to withstand all environmental factors associated with the launch without degradation. The mechanical separation devices such as hydraulic pin pullers, actuators, gas operated pistons, pyrotechnic bolts or MDF can be fully redundant and have operated very successfully on previous programs. Trades performed to date on other studies for separation methods favor the hydraulic or electric pin pullers concept.

A second critical subsystem is the launch/ascent propulsion which consists of ten rocket engines mounted on the boost vehicle and two engines on the orbiter operating in series burn. With the pad hold down capability, approximately 30% of the engine start failures are eliminated. This capability provides assurance that all booster engines are operating satisfactorily prior to launch, or if not, the mission may be scrubbed with minimum risk. Quick egress and escape

provisions have been made for crew and passengers to reduce the personnel risks associated with fueling, engine ignition, and system checkout during the pre-launch phase.

Based on vendor information for engines in the 1/2 million pound thrust class, the reliability range for operational engines will lie between .992 and .999 for start. The catastrophic failure rate is estimated to be less than 1% of the normal operating rate, or the probability of not experiencing a catastrophic engine failure will range between .99992 and .99999 per engine. Although the use of ten booster engines increases this risk probability by an order of magnitude, an acceptable safety goal can be attained.

For booster reliability and crew safety, the mid point of the range of single engine reliability was used (.9955) to estimate the probability of launch success with holddown and engine-out capabilities. The boost success estimate is .9991, which is a considerable improvement over the current launch reliability requirements.

9.3.4 Landing Analysis - The landing requirements for both vehicles are high enough to merit examination in areas beyond the hardware needs. Estimated vehicle landing accident probabilities for the Orbiter and Booster are presented in Figure 9.3-5, and is based on the landing accident rates of propeller driven and jet powered commercial transports versus their landing speeds. The predicted values for the orbiter and the boost vehicle assume that the landing gear, control capabilities and pilot skills are all commensurate with commercial aircraft and that the systems are fully qualified.

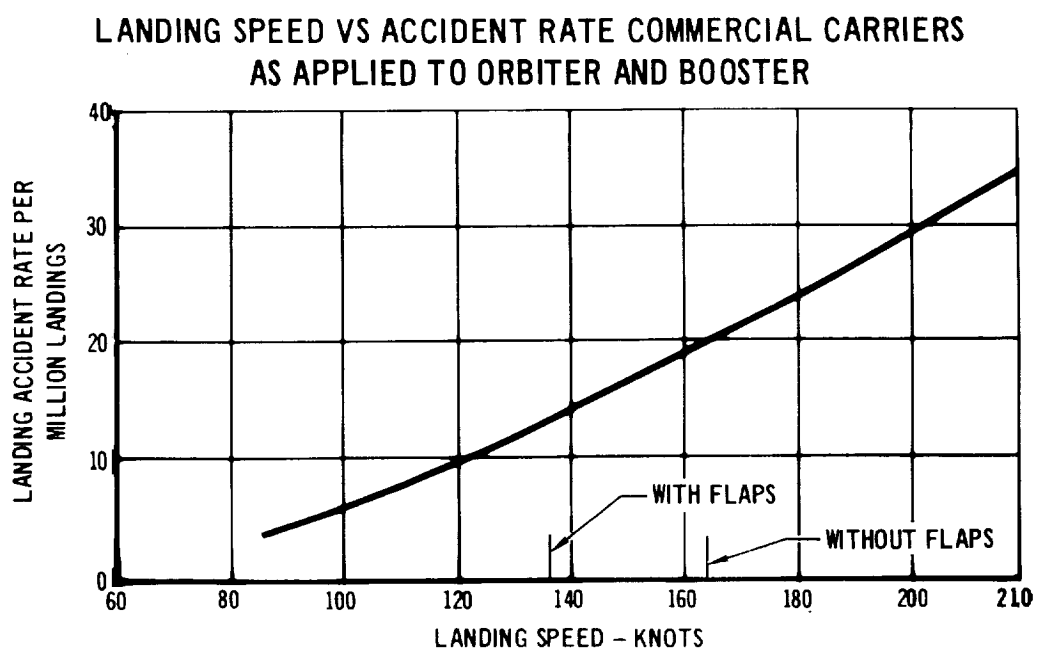

Figure 9.3-5

10. DEVELOPMENT, TEST, AND PRODUCTION

10.1 Supporting Research and Technology Development - The objective of this section is to identify technology efforts that are pacing to the design and development of the STS, and to outline approaches to attain the technology. Pacing technologies normally involve primarily engineering rather than experimental effort, but in this program there are some which will require extensive experimental development effort.

The technologies considered are:

- Hardened compacted fibers
- Coated Refractory Metal
- Carbon/Carbon
- High Pc Boost Engine
- Integrated Electronics
- Gaseous O_2/H_2 RCS
- Boundary Layer Transition and Turbulent Heating Study
- Cryogenic Insulations
- Automatic All Weather Landing Capability
- Cruise Engine Vacuum Storage
- Cruise Engine Using LH_2 as fuel

The following discussions present pertinent data on these technologies.

HCF (HARDENED COMPACT FIBERS) FOR LIGHTWEIGHT REUSABLE HEAT SHIELDS

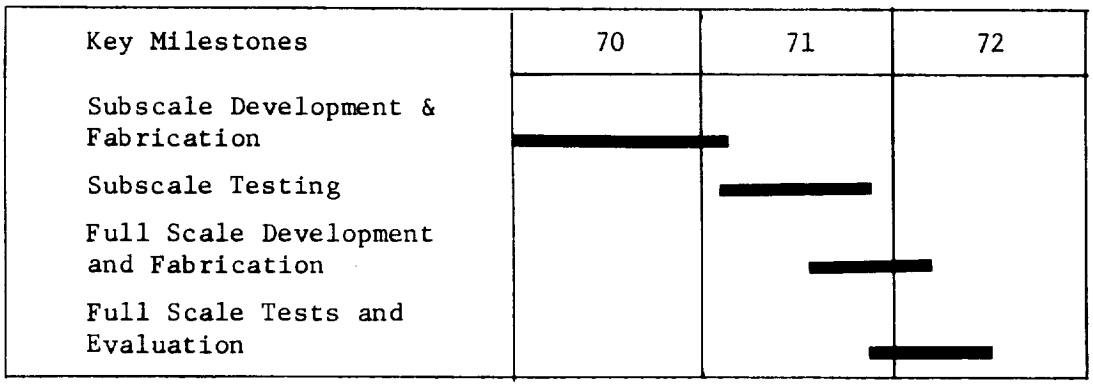

Problem - Hardened Compacted Fibers (HCF), a family of fiberbased, ceramic oxide, thermal protection materials which have been studied and identified as good candidates for advanced, lightweight, thermal protection for reusable shuttle vehicles operating at temperatures up to about 3500°F. The thermal efficiency of HCF material is better than the best ablator materials therby providing the lighter weight thermal protection systems. They are also potentially reusable because they are inorganic and do not exhibit mass loss during reentry heating. However, scale-up from small specimens to full scale heat shields and the state of development are areas of limited experience. Problem areas that need investigating are possible damage caused by rain erosion, moisture absorption, ground handling, and acoustic and mechanical vibration.

Approach - Develop various HCF materials emphasizing process reproducibility, uniformity, scale-up, attachment methods and costs. Develop and evaluate coatings. Conduct subscale tests under simulated reentry conditions using gas torch and plasma facility tests. Conduct mechanical, acoustic vibration thermal conductivity and impact tests. Selected HCF materials shall be fabricated into simulated full scale test specimens. Evaluations of mechanical and thermal properties and optimum fabrication techniques will be conducted on the subscale and full scale test specimens.

Alternate - Trade studies between the use of HCF, carbon-carbon and refractory and other high temperature metals will have to be completed prior to final material selection.

COATED REFRACTORY METALS

Key Milestones	1970	1971	1972
Specimen Fabrication and Coating			
Reuse and Design Allowable Testing			
Emittance Measurements			

Problem - Need to establish the reusability and design allowables of coated refractory metals so that an efficient and reliable structure can be designed. Must establish the coating emittance characteristics under reuse conditions.

Approach

1. Reuse Capability - Laboratory size (3 in. x 8 in.) specimens representative of typical heat shield constructions will be exposed to simulated flight profiles of temperature, pressure, and stress simultaneously and evaluated as to structural integrity.
2. Design Allowables - Laboratory size (3 in. x 8 in.) specimens representative of typical heat shield constructions will be tested structurally after various amounts of simulated flight profiles of temperature, pressure, and stress applied simultaneously. Acoustic tests will also be conducted.
3. Emittance - Small coated samples with integral reference cavities will be exposed to simulated flight profiles of pressure and temperature with emittance being measured simultaneously.

CARBON-CARBON FOR LIGHTWEIGHT REUSABLE LEADING EDGES AND NOSE TIPS

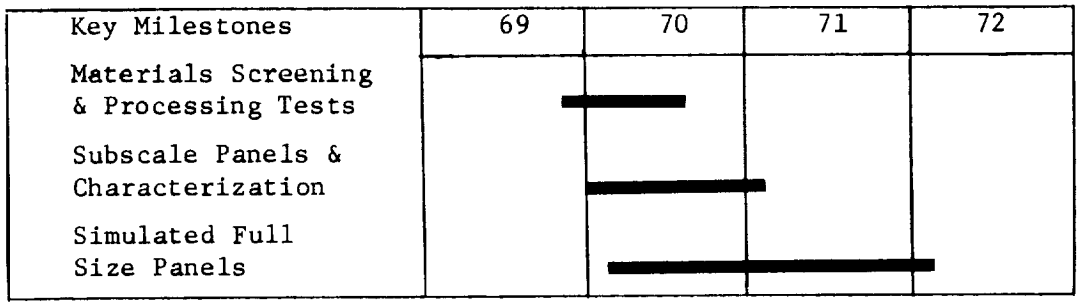

Problem - To devise and implement a program to improve and evaluate carbon-carbon materials which: (1) will be stable in air oxidizing atmosphere at heat fluxes which simulate shuttle reentry profiles; (2) have high strengths at all operating temperatures. Sufficient characterization of the material for design and construction of lightweights, reusable leading edges, and heat shields for the space shuttle, must be provided.

Approach - The first phase of the program will include the development and testing of oxidation inhibiting coatings and internal additives which will be varied for optimization for use with a suitable carbon fiber, carbon matrix combination. Characterization of the optimized carbon-carbon material will then follow which will provide sufficient information for the design and construction of full-scale carbon-carbon leading edges/heat shields. The final phase of this study will be the testing and evaluation of simulated full scale sections of leading edges and heat shields as to their reusability under space shuttle launch, orbiting, and entry conditions.

HIGH P_c BOOST ENGINE

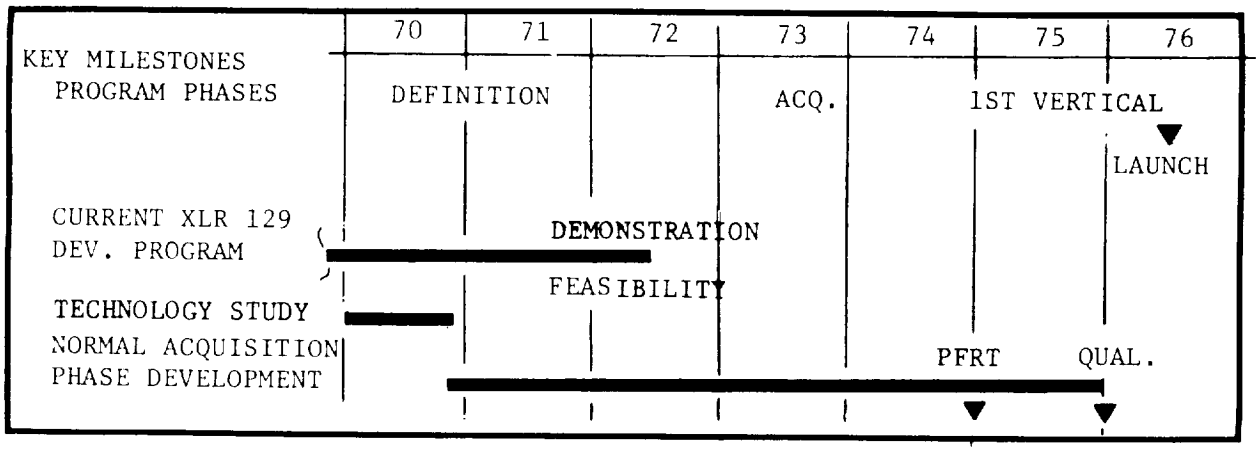

Problem - Design and development of the main boost engine is certainly one of the most essential development problems of the current STS concept; however, it in itself embodies many technology problems which are currently being studied in the XLR 192 and aerospike programs.

While the anticipated progress of these engine programs is expected to demonstrate feasibility in time for a normal but lengthy acquisition phase development, the problem is mentioned here to highlight the importance of maintaining an engine (and associated technologies) development program to assure demonstration of feasibility in time for an acquisition phase in late 1971.

INTEGRATED ELECTRONICS

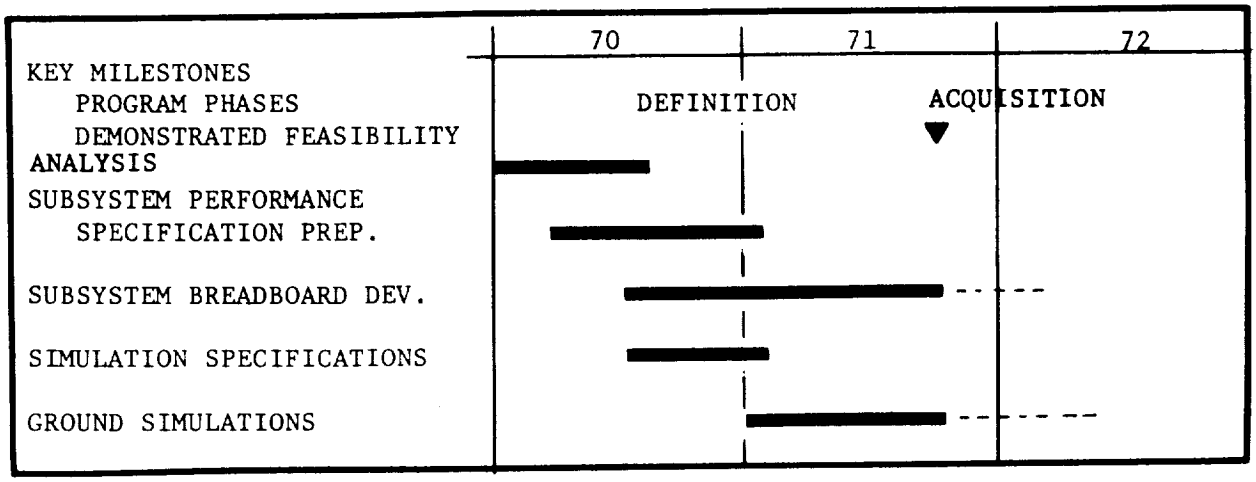

Problem - Integration of all electronic subsystem requirements into a cohesive simplified total system that considers all of the functional requirements in the initial design. Although the ability to develop any single element of the system does not require a technology breakthrough, solution of the overlapping requirements and interfaces will require early subsystem trade-studies and definitions. Particular emphasis will be required on the data bus, electronic controls and displays, self test and warning system because of their significance to the onboard checkout, low maintenance, high reliability system requirement.

Approach - To assure compatible integration and subsystem design much of the normal conceptual phase subsystem performance specification and breadboard development effort must be started in the definition phase. This will enable early simulation testing to verify system feasibility prior to preceding with the Acquisition phase. These simulations would be complete or include parts simulated with math models or functional substitude components from previous space programs such as Apollo, and Gemini. These tests will lead to development of operational systems design, procedures and software design and test.

The integrated electronics system design can be at an equivalent state of maturity as the configuration, structure, engines, etc. if the electronic subsystems are selected and designed to this accelerated schedule.

Alternative - Use existing state of the art concepts which do not provide the necessary economy or performance required in the STS.

O_2/H_2 ATTITUDE CONTROL PROPULSION

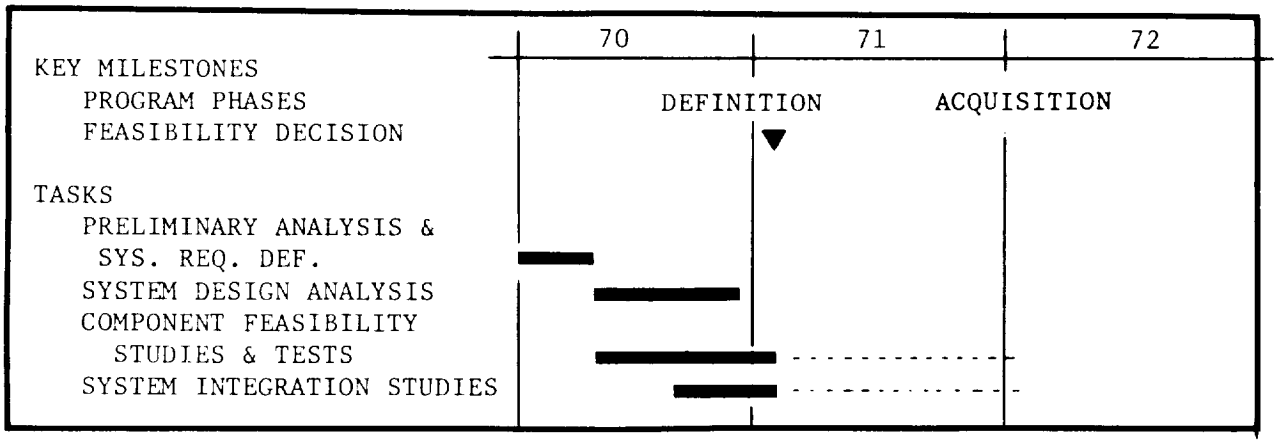

Problem - While the problem can be summarized as determining the feasibility of a low maintenance attitude control system, it is in reality much more complex. There are many more specific technology problems which are interrelated and must be studied and solved together. Some of the most significant ones are: gaseous injection, reliable multicycle ignition systems, thrust chamber cooling techniques, extremely high cycle life, leak tight injection valve design, and zero g expulsion of cryogenic propellants.

Approach - Prior to the Definition phase conduct a study which contains four major task efforts as shown in the above schedule.

1. Analyze the system requirements, establish preliminary subsystem requirements, and select a baseline subsystem concept.
2. Perform system design analysis in conjunction with the component feasibility studies and tests.
3. Conduct component feasibility analysis and tests on the major areas of concern: the catalytic gas generator, components to insure positive vapor feed, combustion chamber, the injection valves, and the ignition system.
4. Perform system integration and operation studies to: define feed system dynamics and pneumatics; define effects of variable gas feed temperatures; establish fabrication, assembly, and servicing techniques and procedures.

Alternate - Use earth storable bi-propellant system or a monopropellant hydrazine system. Use of either of these systems is not expected to have a significant effect on system weight however it is estimated that maintenance and reuse, times and costs will be greater than for the cleaner O_2/H_2 systems.

BOUNDARY LAYER TRANSITION AND TURBULENT HEATING STUDY

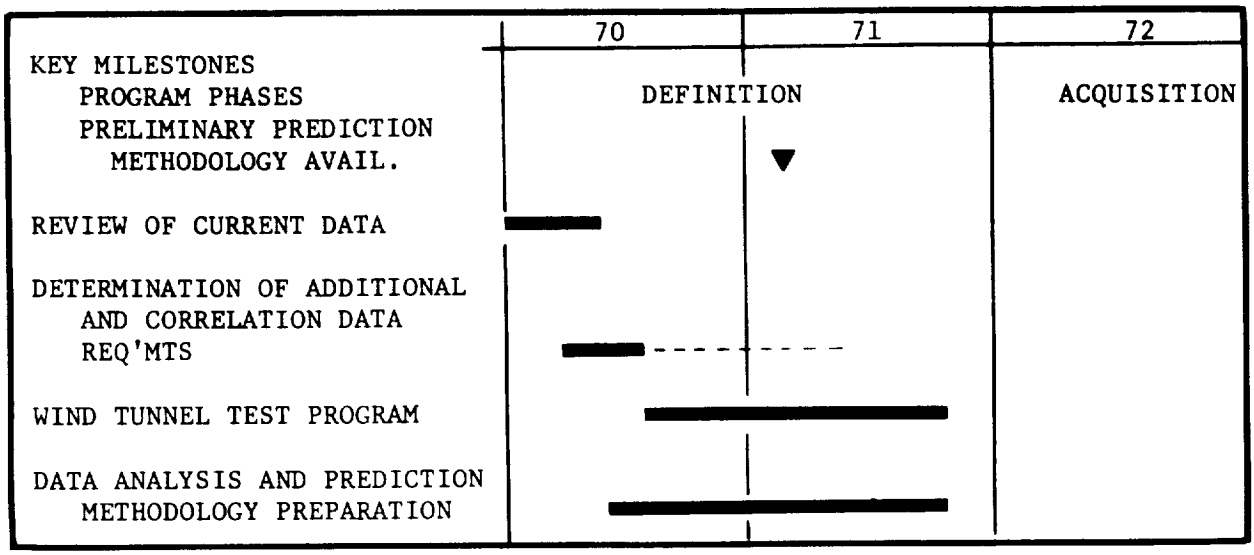

Problem - Limited knowledge concerning boundary layer transition increases the uncertainty of preliminary estimates of heating rates (maximum temperatures) and loads. Vehicle design is consequently penalized by thermal protection weight and cost resulting from conservative estimates due to uncertainties.

Existing experimental heating distributions testing has been for a laminar layer. However, in design analyses, maximum temperatures over the bulk of a vehicle's surface are defined by laminar testing however they may be marginally transitional to turbulent heating. These temperatures are generally based on transition criteria, flow field and heat transfer theory postulations which sometimes lack adequate verification for a specific vehicle configuration; thus augmenting the uncertainty (and possibly the weight and cost penalties) in preliminary design estimates.

Approach - This recommended study effort would be in support of the normal definition phase trade study and design efforts. Results of this study would be invaluable for comparison with the main line configuration analytical and wind tunnel data and predictions from the definition phase.

There would be four major tasks of the study. They are:

1. Review and analyze all data from previous tunnel and analytical studies on shapes and/or configurations applicable to lifting entry.
2. Determine requirement for additional tunnel and/or analytical studies to either supply correlation or new data.

3. Conduct required wind tunnel testing.
4. Combine, and analyze all collected data and derive the required methodology for laminar and turbulent heating, and flow transition criteria.

Alternate - Neglecting transition yields essentially minimum temperatures and weights for a specific entry trajectory. However, this phenomenon can only be neglected when substantiated by adequate test data. Lacking such data, vehicle design must be based on an accepted transition criterion. On the other hand, this accepted criterion may not be applicable for the configuration of the specific vehicle.

Thus, including transition generally yields high estimates of temperatures and TPS weights, penalizing vehicle design. Similarly, the choice of transition criterion augments the severity of these penalties because of the uncertainty of its use for a specific vehicle.

CRYOGENIC INSULATIONS

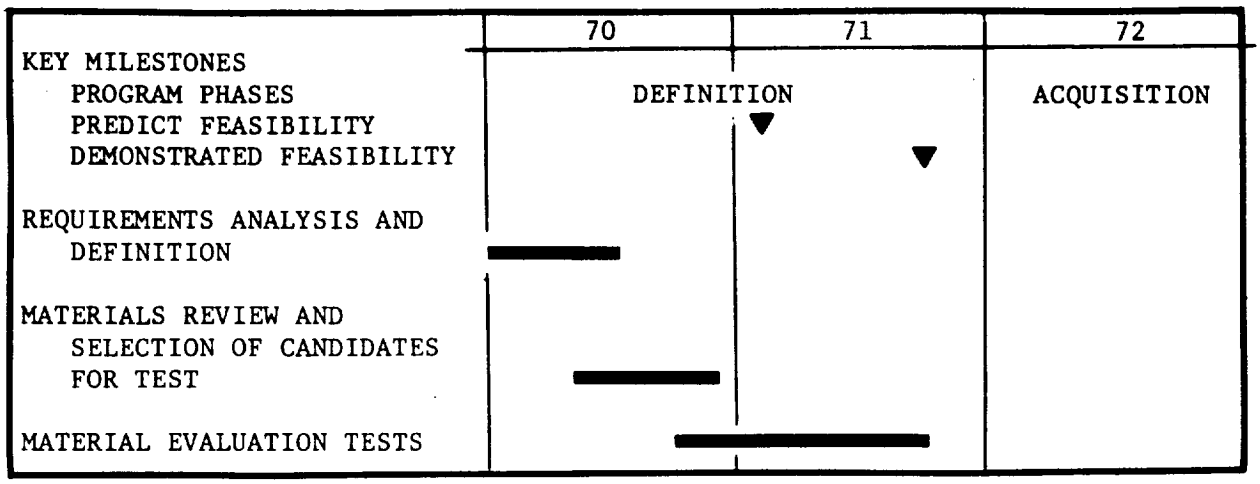

Problem - Selection and verification of low weight, long life cryogenic insulation.

Approach - Investigation of new materials and/or improved reinforcement techniques will require a three step program. First, systems requirements must be analyzed and desired insulation characteristics defined. Second, an industry search conducted to determine availability and applicability of materials. From these materials candidates would be selected for detailed material property and design information tests. The third step would be to conduct evaluation tests on these candidates. Testing would include:

1. Reuse (reduced cost) - Laboratory and full scale specimens will be subjected to chill down/fill simulation cycles and evaluated as to structural integrity.
2. Material/Reinforcement (reduced weight) - New foaming materials, better reinforcement techniques or processing techniques to obtain a lower density foam will be established in the laboratory and scaled-up in manufacturing areas.
3. Increased Temperature (performance payoff) - Materials will be surveyed and evaluated in the laboratory. PI resins will be foamed to obtain low density foam with increased temperature capability.

4. Gas Barriers (weight reduction) - Materials (film and laminates) will be evaluated as to H_2 permeability in joint and non-joint configurations in the laboratory. Typical scale-up specimens will also be subjected to permeability evaluation.
5. Non-Destructive Inspection (reliability, cost) - Various methods will be evaluated on laboratory and sub-scale specimens as to efficiency, cost and reliability.
6. LOX Insulation (boil-off reduction) - Various insulation systems/ materials will be subjected to LOX impact testing to determine threshold energy for reaction.

Alternate - Use current state-of-the-art insulations with possible weight and cost increase, and lower efficiency.

AUTOMATIC/ALL WEATHER LANDING

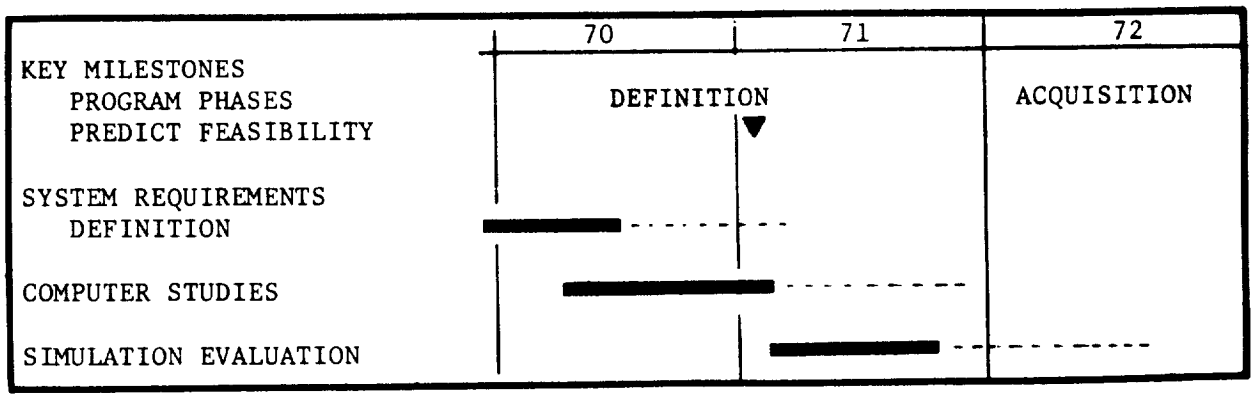

Problem - A requirement exists for all-weather automatic approach and horizontal landing capability in the powered mode. Requirements for hardware definition, the capabilities for power-out back-up, and establishing touchdown dispersions must be defined.

Existing systems (Sperry ..... and Bell .....) are partially developed for unpowered and unmanned vehicles and clear weather operations only since visual contact with the vehicle must be maintained.

Approach - Conduct studies utilizing a 6 degree of freedom digital computer program and a flight simulator to evaluate various guidance and control schemes. These studies will be conducted for flight phases beginning prior to engine deployment and continue through approach and horizontal landing.

Alternate - Presently there is no alternate method for achieving the automatic all-weather landing capability. If the requirement for all-weather landing capability is relaxed, the possibility exists to upgrade an existing system through further development or a modification program.

CRUISE ENGINE VACUUM STORAGE

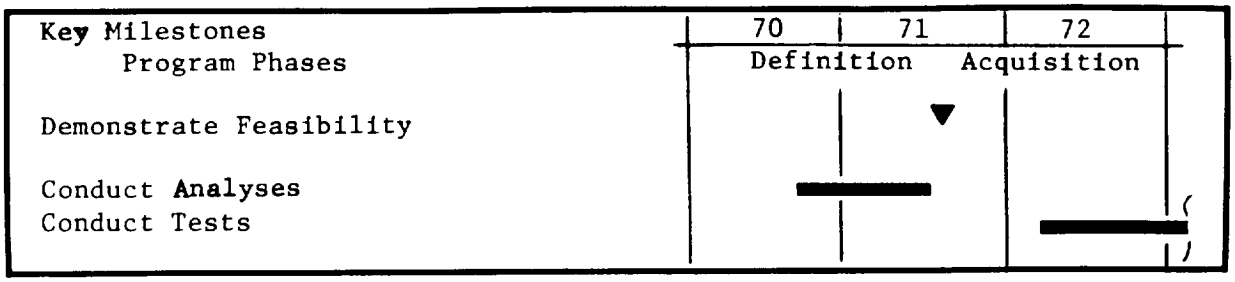

Problem - Conventional turbojet or turbofan engines have not been used operationally with a requirement to remain in vacuum storage over a large temperature range and then air-started. Vacuum effects on conventional engine subsystems and reliability of air-starts after this exposure must be evaluated. Engine operation after exposure to this environment must be demonstrated.

Approach - Conduct analyses on components and subsystems.

Run tests to evaluate lubrication and fuel systems under vacuum storage conditions.

Demonstrate lubrication system effectiveness after vacuum exposure.

Alternative - Use pressurized engine compartment for orbital missions.

CRUISE ENGINE USING LH_2 AS A FUEL

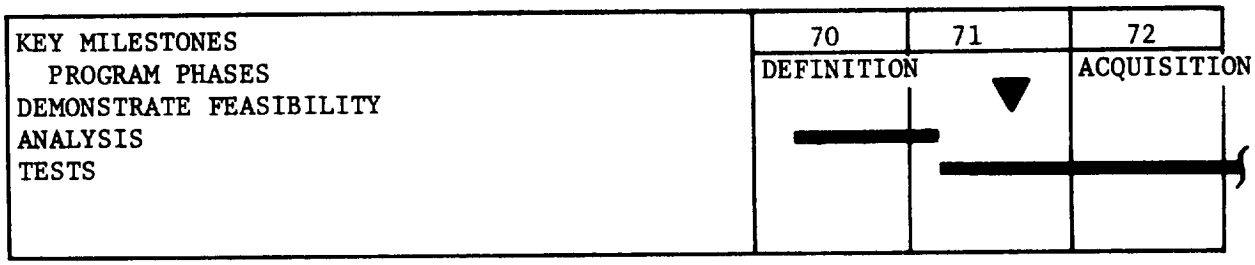

Problems - Conventional turbojet or turbofan engines use fuels which are much more dense and are less volatile than LH_2. Therefore, these engines will need considerable redesign and development to allow the use of LH_2 as a fuel.

Approach - Conduct analyses on components and subsystems, and integration of subsystems into a logical engine system. Tests will be run to evaluate such things as LH_2 fuel management, insulation, bearing and lubrication performance, and engine operational temperatures.

10.2 Development Test Plan - This development test program provides a basis for establishing development costs, schedules, and identification of time critical development effort where additional definition and study is required. A summary schedule illustrated in Figure 10.2-1 is based on parallel development of the Orbiter and the Booster and assumes that technology and research funding is adequate to demonstrate feasibility of all technologies prior to go-ahead on Phase D. The development, manufacturing and flight tests efforts of this schedule are considered to be the minimum allowable. The operational program was assumed to have one launch per month and require three orbital vehicles and two boosters to meet this schedule. Initial Operation Capability (IOC) occurs in mid-July 1976 and all five production vehicles are utilized for flight testing.

This section includes definition of the normal development tests and hardware required. Section 10.1 includes definition and discussion of the requirements for supporting research and technologies effort which have been identified as essential or significant to this program.

There are four basic categories of testing in a development program and they are:

- Design Information Tests - are performed to obtain design information, where analytical techniques are not adequate, and to evaluate materials, processes, circuitry and mechanisms for design, reliability, safety, and refurbishment characteristics. The test articles may be components, breadboards, subsystems, or spacecraft models as necessary to evaluate the condition or function of interest. The tests are normally informal, with test documentation and control as internal company functions.
- Design Verification Tests - are performed to verify that the design functions as intended and has the required characteristics. These include design characteristics such as strength, performance, fit and interface compatibility. Where possible design verification tests will be combined with qualification tests.
- Qualification Tests - are formal tests generally conducted by vendors or McDonnell Douglas on production hardware. They are conducted at or above expected mission levels for all critical environments. These tests assure that the hardware design, manufacturing processes, and quality control meet the specification requirements.

SUMMARY DEVELOPMENT SCHEDULE

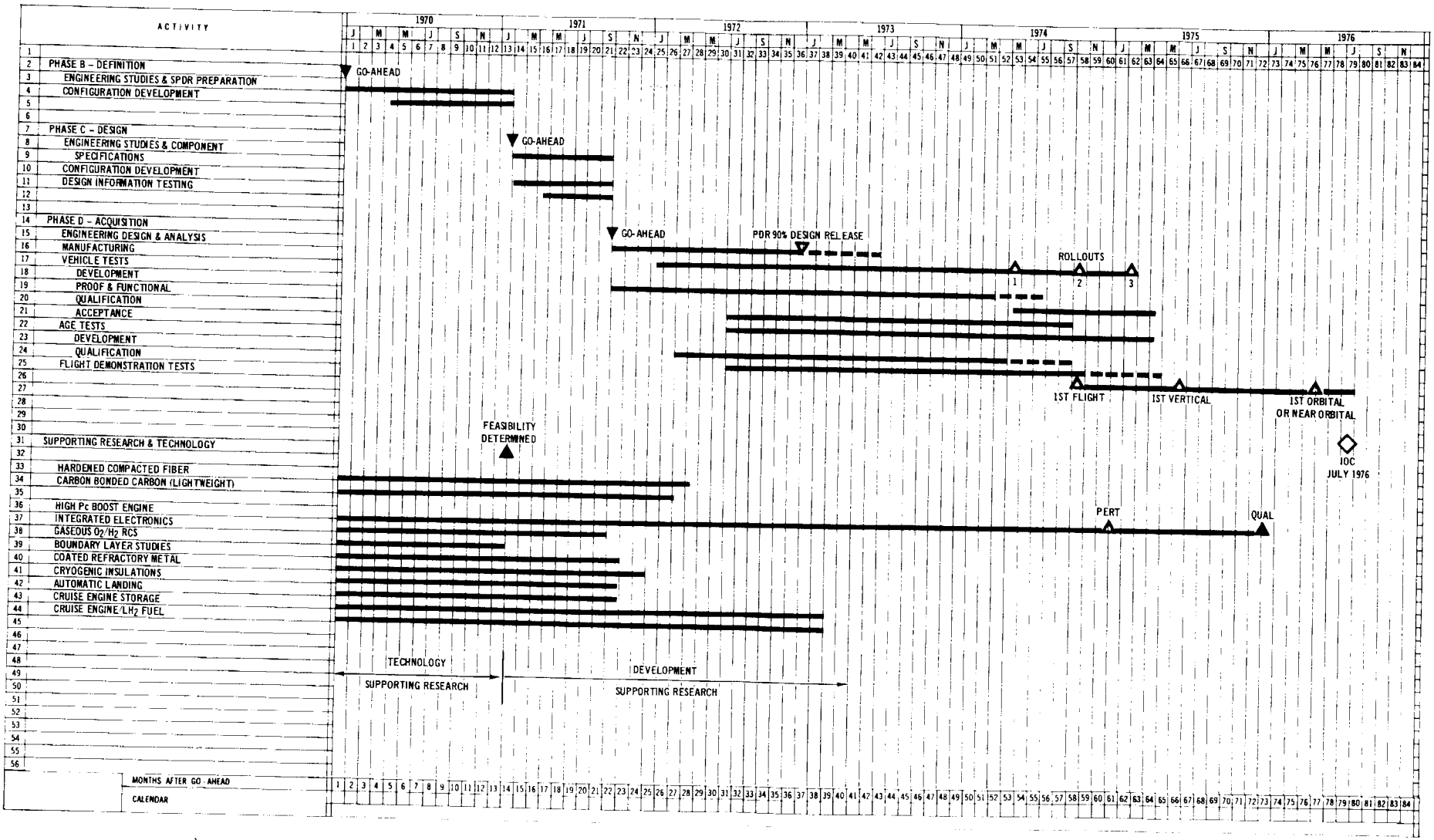

FOLDOUT FRAME

Figure 10.2-1

FOLDOUT FRAME

- Flight Demonstration Tests - will be conducted with production vehicles prior to the Operational Phase. These flights will verify the total performance of the vehicle and its subsystems. Upon completion of these tests, the vehicles will be refurbished to remove test instrumentation.

These test categories, except flight test, are applicable to Aerospace Ground Equipment (AGE) as well as flight equipment.

In practice, the need for each test is determined on an individual basis depending on item complexity, mission criticality, environment and cost. Considerations which influence decisions concerning the timing of any particular test or that the cost of that test is justified are:

- The complexity of the design and associated interfaces.
- The confidence which can be placed on the analytical technique used as a basis for the design.
- The schedule and cost effects of a potential failure later in the program. Past experience has shown that even the most rigorous analyses cannot fully and adequately account for the myriad or interrelated factors which go into the design of complex systems. Similarly, testing alone cannot result in a satisfactory product without adequate analysis. Analysis and test serve as a check and balance.

10.2.1 Phase B Definition - During this phase primary efforts are directed towards preparation of the System Specification and a preliminary design definition of the Systems required hardware and facilities. These efforts will require engineering trade studies and analysis, supported with computer programs and configuration development wind tunnel tests.

10.2.2 Phase C Design - The preliminary designs will be firmed up, subsystem specifications will be prepared and any long lead item procurements will be placed during this phase. Most of the subsystem configuration trade studies will be completed and intra sub-system trades will be accomplished. Configuration development wind tunnel testing will be accelerated and approximately 7-8000 more test hours will be required to assure a firm configuration for the Phase D hardware design and development effort. In addition to the wind tunnel configuration development tests, design information testing will be started on some of the subsystems.

10.2.3 Phase D Acquisition - Final hardware design fabrication and testing will be accomplished in this phase. The feasibility of all of the technologies, to be incorporated into the design will be demonstrated before this phase is started.

Engineering designs will be approximately 90% complete by the 13th month, manufacturing efforts on some test hardware will start as early as the 4th month and the first flight test vehicles will roll out in the 33rd month and fly about 5 to 6 months later.

Development and verification testing of new components will include performance/demonstration tests of complete systems, and integration tests of several systems. Functional and/or proof tests of some systems will be performed on the first flight articles prior to first flight. Figure 10.2-2 is a detailed schedule of the estimated vehicle ground test requirements for both the orbiter and the booster. Since both have essentially the same test program requirements the following paragraphs which discuss the testing approach and philosophy for each of the categories in Phase D are applicable to both except as noted. Figure 10.2-3 lists and defines the major test hardware items.

10.2.3.1 Development Tests

a. Wind Tunnel Tests - Wind Tunnel tests which are conducted prior to Phase D will be directed toward configuration definition, selection and development. Tests conducted after Phase D go-ahead will include performance verification testing also. Figure 10.2-4 shows the types of tests which will be conducted in the various flight regimes. A definition of the four basic types of wind tunnel testing on scale models are:

- Aerodynamic force and moment - data are derived using a balance mounted scale model.
- Heat transfer - data are derived from a scale model which has gages located in the areas of interest and/or has a coating of temperature sensitive paint.
- Pressure distribution - data are derived from a scale model which has pressure transducers or orifices located in the areas of interest on the model surface or in engine ducts.
- Dynamic response - data are derived from dynamically similar scale models of the complete configuration or parts thereof such as wings, tails, etc. These models are instrumented with

SUMMARY – PHASE D GROUND TEST SCHEDULE

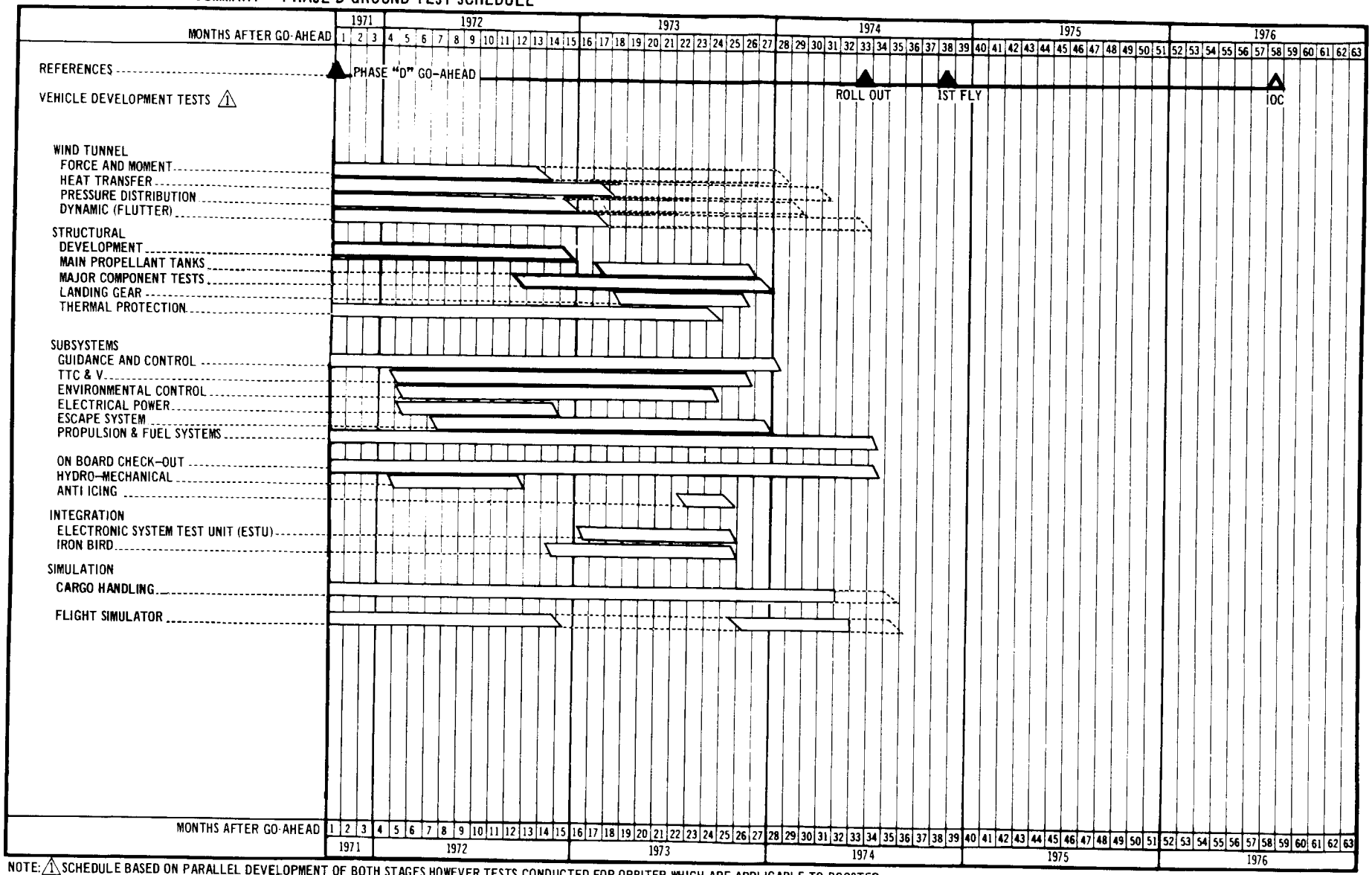

NOTE: 1 SCHEDULE BASED ON PARALLEL DEVELOPMENT OF BOTH STAGES HOWEVER TESTS CONDUCTED FOR ORBITER WHICH ARE APPLICABLE TO BOOSTER WOULD NOT BE REPORTED. TESTING FOR DIFFERENCES IN APPLICATION & PECULIAR HARDWARE WOULD GENERALLY BE CONDUCTED IN THE SAME TIME PERIOD.

FOLDOUT FRAME 1

Figure 10.2-2

FOLDOUT FRAME 2

MAJOR GROUND TEST HARDWARE DESCRIPTIONS

Major Structural Components	Production configuration structural components utilized to demonstrate structural adequacy. Sections will only be structural areas of greatest concern, not a complete airframe.
Main Propellant Tanks	Full scale production tanks of reduced length, (min length of 2 diameters plus domes) used to verify pressure cycle life. One full scale tank for ultimate loads plus pressure test.
Landing Gear	Production configuration hardware including backup structure. Utilized to demonstrate structural adequacy, and develop load-stroke characteristics.
Electronic System Test Unit (ESTU)	Full scale mock-up of selected sections of the vehicle to provide mounting for all electrical/electronic equipment and wiring in proper relationship. May include development configuration equipment to evaluate electronic compatibility and EMI.
Iron Bird	Full scale boiler plate frame work of selected vehicle areas which has provisions to mount all mechanical, electro-mechanical, hydraulic, and automatic flight control systems in their proper relationship. Used to test and evaluate the flight control systems.
Flight Test Vehicle	Full scale production units which will initially be flown, without some subsystems which are not required in the early part of the flight demonstration program, and with some production subsystem components which have been flight worthiness tested but not fully qualified. These subsystems and components would be added or replaced as they became available or according to the flight program's needs.

Figure 10.2-3

SUMMARY – SPACE SHUTTLE WIND TUNNEL TESTS

	CONFIGURATION DEVELOPMENT				PERFORMANCE VERIFICATION			
	SUBSONIC	TRANSONIC	SUPERSONIC	HYPERSONIC	SUBSONIC	TRANSONIC	SUPERSONIC	HYPERSONIC
ORBITER	F&M, P	F&M, P	F&M, P, D	F&M, P, HT	F&M, P, D	F&M, P, D	F&M, P, D	F&M, P, D, HT
BOOSTER	F&M, P	F&M, P	F&M, P, D	F&M, P, HT	F&M, P, D	F&M, P, D	F&M, P, D	F&M, P, D, HT
COMPATIBILITY (STAGES TOGETHER)	F&M, P	F&M, P	F&M, P, D	F&M, P, HT	F&M, P, D	F&M, P, D	F&M, P, D	F&M, P, D, HT
ESTIMATED TUNNEL HRS	(18,000)				(12,000)			
	PHASE B		2500 OCC. HRS		(CONFIGURATION DEV.)			
	PHASE C		7500 OCC. HRS		(CONFIGURATION DEV.)			
	PHASE D		20000 OCC. HRS		(CONFIG DEV & PERFORMANCE VERIFICATION)			
	ESTIMATED TOTAL		30,000 OCC. HRS					

F&M – FORCE & MOMENT TESTS
P – PRESSURE TESTS
HT – HEAT TRANSFER TESTS
D – DYNAMIC (FLUTTER) TESTS

Figure 10.2-4

accelerometers and/or strain measuring devices to measure the model forces and response.

It is estimated that the total amount of wind tunnel testing will be 30,000 hours including those hours from Phases B and C.

b. Structural Tests - The structures development and verification test program will include a) material tests where needed characteristic data are not available; b) prototype element and component tests to provide data where analysis techniques are not adequate and c) verification tests of major structural components to critical ultimate conditions or failure.

The major feature of this program is that no complete static test vehicle is required; verification tests on instrumented major components to be tested to ultimate conditions will provide data to compare with similar data obtained during proof test loadings (to limit load) of the first flight article. This procedure is the same as has been followed in large transport structures. (DC 8, 9 and 10). Upon completion of the structural verification tests the structures will be considered to be qualified.

Major structural components will include wing carry-through structure; wing-body attachment structure, complete horizontal and vertical tail structure; thrust structure and related aft fuselage and main propellant tank structure; landing gear and back-up structure; pressurized cabin and tunnel structure; control mechanisms, stage-to-stage interconnect structure, and TPS panels and support structure.

In addition, pressure cycling tests and burst pressure tests will be performed on main propellant tank structures.

Ultimate strength tests will also be conducted on all major fittings and mechanisms as well as functional performance tests as applicable. Representative items in this category are windows, hatches, doors and door operating mechanisms, cargo deployment mechanisms, air breathing engine mounts, and major mass item support structures.

Proof loading of the nose and main gear and its support structure will be accomplished on one of the flight test vehicles. The landing gear (including wheels, tires and brakes) will be qualified by component testing. The nose and main gears will be tested with the gear installed in separate test fixtures which incorporate production local supporting fittings. The loading will be continued to the design ultimate load for

critical conditions. The landing gears from the structural flight demonstration vehicles will be instrumented and installed in these setups for calibration prior to use for measuring loads during the flight test program.

Testing will be required to develop a reusable heat protection system which has the required capability to withstand the reentry heating, and flight loads for 100 flights. Material testing will start prior to and continue into Phase D (Reference supporting research and technology in Section 10.1). Tests will include material properties at elevated temperatures. Element, component, and panels will be tested under repeated loads and temperature cycles.

In addition to the above static load testing, dynamic tests will be conducted. These dynamic tests will include modal vibration surveys, environmental vibration qualification tests of equipment items, drop tests and flutter tests. Ground vibration tests will be conducted on the first flight test vehicle to obtain symmetric and non-symmetric vibration modes and frequencies pertaining to flutter.

c. Subsystem Tests - The subsystem development and verification test program will be based on an established background of procuring and integrating components and subsystems into high performance systems and space vehicles such as the F4, ASSET, BGRV, Mercury and Gemini and the S-IVB booster. The program will consist of systematic in-house and vendor testing of components, subassemblies, assemblies and complete subsystems. Testing for each subsystem involves development of components and performance/demonstration tests. (Reference Section 10.1 for additional data applicable to pacing subsystems and components.) Component and subsystem development tests which are applicable to both stages would not be duplicated, only those tests required due to different installation or application of the subsystem or its components would be conducted.

The following are major areas of subsystems testing:

- Guidance and Control - Testing will start with buildup and test of breadboard circuits of subsystem components, and bench testing to confirm interfaces, optimize subsystem matching and tolerance parameters and bench tests to confirm functional performance. As the subsystem design evolves, three axis motion table tests will be conducted to evaluate system response and interactions, also the guidance

and control systems will be installed in the ESTU and flight simulator to assure compatibility with other systems and to develop gains and single shaping network characteristics to optimize the performance of the various portions of the subsystem. The automatic landing and non-cooperative rendezvous portion of the guidance and control systems will be mostly new state-of-the-art equipment and will require complete qualification testing.

- Telecommunications - Much of the telecommunications system will be current state-of-the-art and, therefore, component and system development tests will be minimized. Testing will include some of the usual breadboard and bench testing to evaluate component interface problems, and integration and compatibility tests in the ESTU. Antenna pattern tests will be conducted to determine their locations. It is expected that one of the major telecommunications problems will be the development of high temperature and high transmissability antenna windows. To solve this will require a coordinated material development program.
- Environmental Control - The Environmental Control Subsystem (ECS) is composed of four main assemblies:
  1. Atmosphere gas supply and management
  2. Gas Management and processing assembly
  3. Heat transport circuit assembly, and
  4. The water supply and management assembly

  Components of these assemblies will be tested separately, then as integrated subsystems for qualification. Examples of typical types of tests are presented in the following paragraphs.

  Water boilers will be tested over a range of coolant pressures, orbital environments, and cabin heat transfer rates to determine heat interchange and plumbing pressure drop and also to determine environmental effect on pressurized and unpressurized systems.

  Water supply subsystem component tests will consist of development of prepressurized water tanks, water dispensing devices, and humidity condensate collector.
- Electrical Power - Electrical power will be derived from H_2/O_2 fuel cells and/or AgO-Zn batteries. Testing will include environmental tests and functional tests under load at nominal and off-nominal conditions to evaluate subsystem performance and characteristics.

- Escape System - A crew escape system will be installed if needed during the development flight test portion of the program. A previously fully qualified rocket ejection seat will be used, therefore, development and qualification tests will be conducted only to prove its application. Structural differences would be tested in the structural test program. Subsystem ejection tests will be conducted to evaluate timing sequence, separation trajectory, and recovery system deployment. These tests will be conducted at conditions which are representative of those which would be encountered within its usage envelope.
- Propulsion and Fuel Systems - Currently it is estimated that one of the most pacing or critical items to be developed for this program is the large high Pc boost engine. The development of this item is discussed in Section 10.1. Generally, the development test cycle for re-entry control system, and orbit attitude propulsion systems will be the same. The individual system components will be development tested, that is motors will be fired to evaluate thrust characteristics for various conditions, disassembled to evaluate component conditions, and integrated with the developed fuel feed system to evaluate performance. Tests will be conducted to verify pressure and supply adequacy, liquid flow system and tankage designed. During the boost engine static firings dynamic environments will be measured to verify the levels for use in the structural dynamic test programs. Total subsystem integration and functional demonstration of all but the boost system will be verified by engine firings in boiler plate spacecraft structure with production design fuel systems after being subjected to flight environments. Verification of the total boost engine installation and fuel system will be demonstrated by static firing in the first flight test vehicle. At this time static firing tests with both vehicles mated is not anticipated. Servicing tests will determine procedures for filling, dump and purge.
- On-board Checkout - On-board checkout development will be started prior to acquisition phase go-ahead (reference technology writeup in Section 10.1. Testing will include bench and breadboard tests to develop system components, confirm interface characteristics, optimize component and subassembly matching and tolerance parameters, and to de-bug existing problems. Subsystem compatibility will be verified

by installation of the on-board checkout system into the ESTU. Operational performance will be verified during flight test.

- Hydro-Mechanical - An extensive test program will be conducted on the hydro-mechanical systems. This will include landing gears, and control system mechanisms. The total hydraulic system will be functionally ground tested and proof pressure tested on the flight test vehicles.

  Development tests will include functional and endurance cycling tests with appropriate loads and pressures on spacecraft configuration rigid tubing, coiled tubes and other critical plumbing installations. Also, functional and cyclic tests will be conducted on components and associated plumbing such as:

  1. Landing gear, valves and cargo door mechanisms.
  2. Gear door actuators, control valves and latching cylinders.
  3. Primary flight control subsystems and high lift device actuators, control valves and mechanisms.

  The hydraulic system associated with the flight controls will be tested with the guidance and control system on the Iron Bird.

d. Integration - In addition to the component and subsystem development and and integration tests of the various electrical/electronic and hydro-mechanical subsystems, they will be installed in the flight control system integration test stands ("Iron Bird") and/or the Electronics Systems Tests Units (ESTU) for integration and compatibility tests between the subsystems. The following paragraphs describe the testing to be accomplished with these setups.

- Electronic System Test Units (ESTU) - The ESTU is a simple mockup of appropriate materials (wood, aluminum, pilot run structural elements) which provides for mounting the electrical/electronic equipment and subsystems in the proper physical relationship. Due to the size of the vehicles complete full scale mockups will not be used. Only selected full scale sections, where the avionics and other equipment are concentrated will be fabricated.

  With this setup the interface compatibility can be developed and verified. Individual subsystem and system performance can be evaluated for nominal and off-nominal operating conditions. Electro-Magnetic Interference (EMI) measurements can be performed to assess EMI control effectiveness.

These tests will be conducted as early as possible in the development to allow corrective action (if necessary) with the minimum of schedule impact.

- Iron Bird - This test stand will consist of full size and geometrically similar section of the spacecraft airframe. So far as possible, actual production components will be located and installed in the proper relationships. This setup is a tool which will permit early resolution of:
  1. Prototype hardware performance and function
  2. Determination of system dynamic characteristics through tie in of computer simulation of complex mechanisms and characteristics.
  3. Total system integration, and
  4. Pilot evaluation through tie in of the motion base flight simulators cockpit. Actual tests will include component functional performance for nominal and off-nominal conditions, subsystem interface compatibility and system gains, signal levels and hysterisis.

  The primary flight control systems included in this setup and testing will be the automatic landing, attitude control system, rendezvous (for the orbiter only), and the primary and secondary flight control systems and their respective trim systems.

e. Simulation - Early in the Space Shuttle program, two types of simulators will be required to develop cargo handling and flight handling requirements and techniques. These two types of simulators are:
   1. Cargo handling simulator (for the orbiter) and
   2. Flight simulator (for both stages).

   Use of the cargo handling simulator during Phase D will be directed towards design and requirements refinement and refinement and crew training.

   The flight simulators will be used as design tools during the initial development of the flight control systems. They will be integrated into the "Iron Bird" test setups where pilot evaluations will be conducted on cockpit procedures, displays and general arrangement. In the latter phases of Phase D, the setups will be used as flight crew training devices.

10.2.3.2 Vehicle Proof and Functional Tests - Tests which will be conducted on the first flight test units before they are flown are:

- Hydro-Mechanical - The control system will be proof tested and operationally demonstrated. The hydraulic system will be functionally ground tested and all lines will be pressurized to 150% of the operating pressure and the system will be inspected for leakage, failure or deformation.
- Electrical System - The electrical power system will be tested to ensure performance of the production system. Tests will include controlled fault simulations and system compatibility tests on various configurations.
- Structural Loads - Design limit loads for critical conditions will statically applied.
- Ground Vibration - Ground vibration tests will be conducted to verify mode shapes and amplitudes. These tests will also provide data to support flutter analysis and verify structural integrity.
- Proof pressure test of main propellant tank on each vehicle.
- Engine Run-up and Static Firings - On the first flight vehicles the cruise engines will be run-up to verify performance, fuel system function and flow, and controllability. Prior to the vertical launches, and boost engines will be static fired in the flight vehicle to verify fuel system and motor performance. This test will also serve to verify dynamic response analysis and testing.

The other flight vehicles will receive essentially the same tests but the scope of the tests will be reduced to prove flight worthiness only (unless of course problems are encountered on the first vehicles which cause significant modification to these vehicles.

10.2.3.3 Qualification Tests - Formal tests will be conducted by McDonnell Douglas or subcontractors and vendor on production hardware. These tests will be conducted at environments established by the NASA and McDonnell Douglas to assure the hardware design manufacturing processes and quality control meet the specification requirements.

10.2.3.4 Acceptance Tests - Acceptance tests are categorized as all testing performed on flight equipment to ensure its capability to perform its assigned mission. These tests are performed by the vendor prior to delivery, and by a Ground Support Operations (GSO) group at McDonnell Douglas and the maintenance site. Spacecraft systems tests are acceptance tests that are performed at various levels of manufacture. Some pre-installation testing is performed to verify that

the unit has not been damaged during shipment, and to obtain reference baseline reusability data. Acceptance testing at the maintenance and launch sites will be enhanced by using the on-board checkout system.

10.2.3.5 Aerospace Ground Equipment (AGE) - AGE testing will be performed, monitored or supported as applicable in the categories of development, qualification and acceptance. In general, AGE items will be considered as qualified for operational support after they have successfully completed support of acceptance tests, spacecraft proof and functional tests, development flight tests and the FACI.

10.2.3.6 Development Flight Tests - The objectives of the Space Shuttle Flight Test Program are to evaluate, develop, and demonstrate the Space Shuttle System (including all subsystems) throughout its design operating envelope in an efficient, low cost, and timely manner, consistent with crew and vehicle safety, Figure 10.2-5 shows the flight test schedule.

Inasmuch as the Space Shuttle System is being designed for operations using airline operation concepts, it is planned to use an approach to flight testing that is similar to the airplane approach. In airplane flight testing, all flights are manned and exploration of the flight operating envelope is done in "build-up" fashion. That is to say, those portions of the flight envelope from which there is a high degree of confidence of recovering the vehicle without damage are entered first, and sorties into other areas are entered from this regime - always attempting to retain options allowing return to this regime in case problems are encountered. The MSC Space Shuttle System lends itself readily to this approach in the low speed, low altitude flight region, but as the envelope approaches orbital conditions the test approach will closely resemble the past spacecraft programs with near orbital or orbital launches.

a. Test Approach - Testing will be divided into phases as shown in Figure 10.2-6. A definition of each of these phases, test phase objectives, and considerations for further studies in Phase "B" are stated in the following paragraphs.

Phase I

- Definition - This phase is the low altitude low speed flight regime. Tests will be conducted on the landing, cruise and ferry configurations. Flight investigations in this area would be entered using a horizontal takeoff and would be followed by a horizontal (normal) landing.

SUMMARY – FLIGHT TEST SCHEDULE

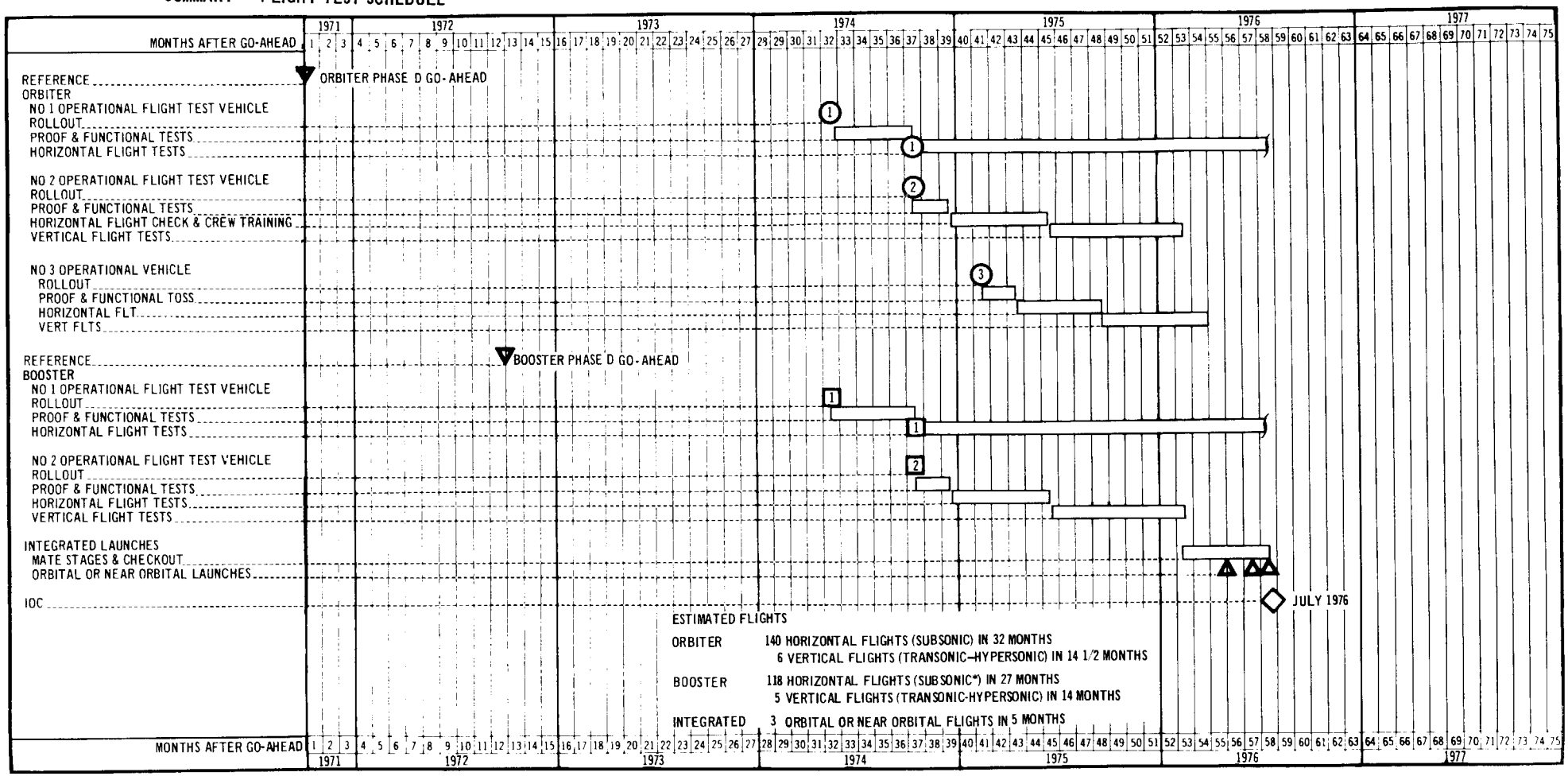

NOTE PHASE B TRADE STUDIES MAY PROVE THAT HORIZONTAL FLIGHTS FOR THE TRANSONIC & SUPERSONIC REGIME ARE ECONOMICAL & FEASIBLE USING BOOST ENGINES OR J2S ENGINES

FOLDOUT FRAME

Figure 10.2–5

FOLDOUT FRAME 2

FLIGHT TEST PHASES

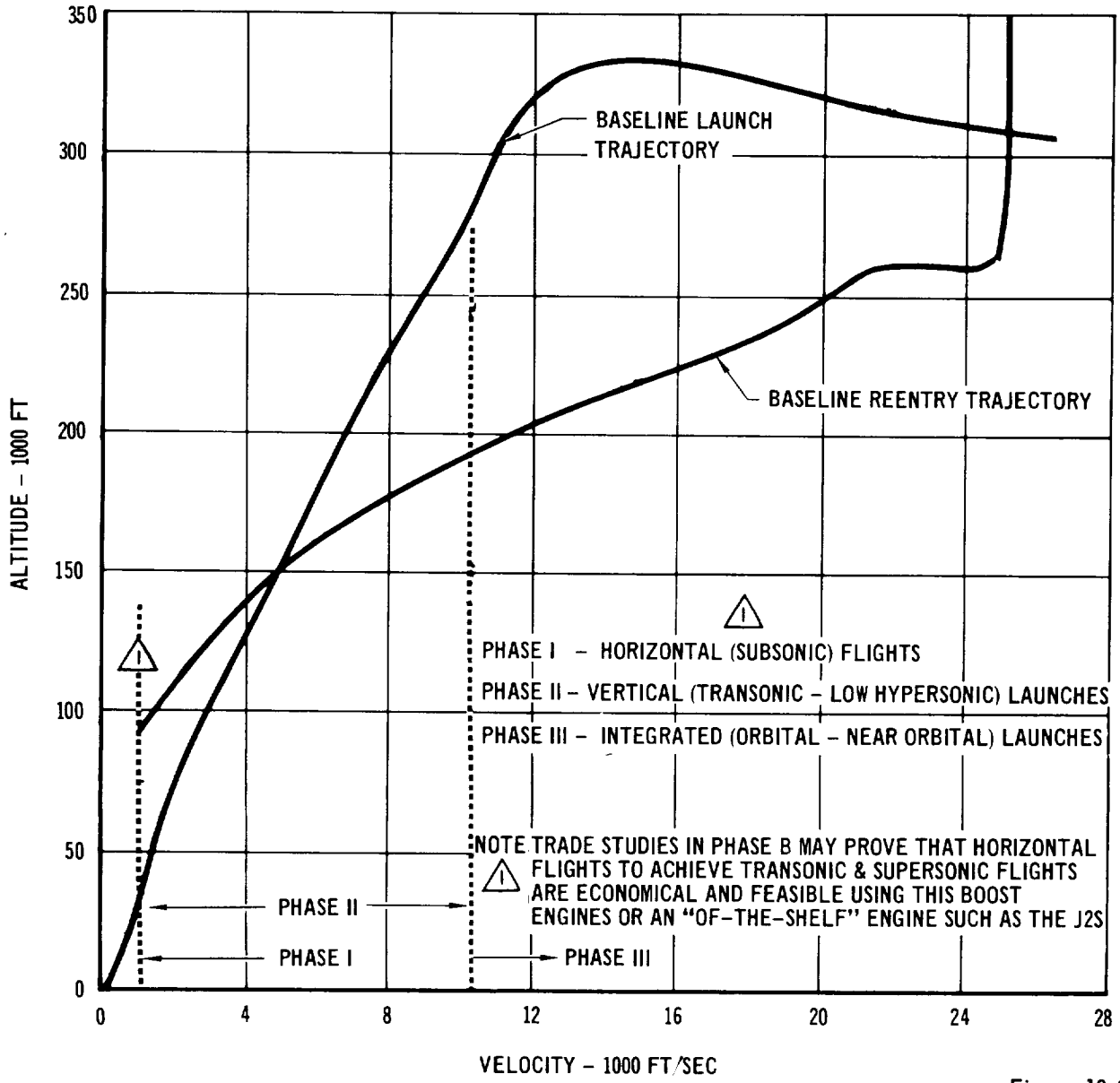

Figure 10.2-6

- o Test Objective - Objectives include evaluation, development, and demonstration of flying qualities, performance, structural integrity, propulsion system, and other subsystems together with crew/vehicle interface in the subsonic flight region.
- o Considerations - This area of flight investigation appears straight forward from an airplane test standpoint and no unusual problems are apparent. Trade studies during Phase "B" may prove that horizontal flight testing can be economically and feasibility extended into the

transonic and supersonic regime with the use of the boost engines or some "off-the-shelf" engine such as the J2S.

Phase II

- Definition - This phase will investigate the envelope in the transonic and hypersonic regime. Launch will be vertical and normal horizontal landings will be made.
- Test Objectives - Objectives include:
  a. Evaluation and development of reaction control system in flight.
  b. Investigation of flying qualities in transonic region.
  c. Development of transition technique from glide to subsonic flight.
  d. To obtain quantitative information relative to the thermal protection system in a progressive or buildup manner, and data for maintainability.
- Considerations - It may be desirable and more economical to cover some portions of this envelope from a horizontal takeoff and using the boost engines or adding "off-the-shelf" rocket engines such as the J2S. Also turning radii and range at test conditions will require tracking, ground station and emergency landing facilities over a wide area. Additional studies must be conducted to determine the most feasible and best way of obtaining the test objectives.

Phase III

- Definition - The progressive buildup of previous testing naturally and confidently will bring the program to this phase which will cover the range of flight conditions which are attainable only by integrated launches into orbital or near orbital trajectories. These launches will duplicate in all respects the operational procedures.
- Test Objectives - To finally demonstrate the entire Space Shuttle System and subsystems through the complete mission profile including rendezvous and exchange of payloads in orbit.
- Considerations - Operational worldwide tracking, data acquisition, and emergency landing facilities will be required.

b. Flight Vehicle Descriptions - In the program there will be five flight test vehicles, three orbiters and two boosters. The first vehicles will be rolled out during the 33rd month and fly for the first time in the 38th-39th month. The time period between rollout and flight will be used

for functional and proof ground tests, and checkout for first flight. These vehicles will be used for subsonic tests only; therefore, they need not have a complete production heat protection system and possibly will not have some of the subsystems required for vertical and orbital flight. After they have completed the contractors subsonic performance, ground handling methods evaluation, and subsystem demonstration program they would either remain in an "aircraft" configuration for customer subsonic flight test and/or crew training, or would have the production heat protection system and missing vertical and orbital subsystems installed and be used in the early portion of the operational program.

The other flight vehicles will require only three months of ground testing and checkout before first flight. These units will be "allup" production flight articles with complete subsystems installed. They will first be flown subsonic for checkout, additional subsystem performance and crew training. After completion of this short series of Phase I tests they will be used for Phase II, III, tests with the first flight articles acting as backup. These flight vehicles would be turned over to the customer at the end of Phase III testing for further flight tests, crew training, or operations.

10.3 Specifications - A preliminary analysis of current transport aircraft and government specification practices was conducted to determine and recommend for further consideration those aspects which appeared to have a significant impact on improving program costs.

Preparation of a Detail Type Specification in the format of Air Transport Association Specification No. 100 (ATA-100), Specification for Manufacturers' Technical Data, is required to market proposed commercial aircraft.

It is the intent of ATA-100 to standardize the presentation of technical data so as to permit its maximum usage by an airline, without the expenditure of money and effort previously expended in rewriting almost all data to meet individual airline requirements. Individual airline requirements (mainly equipment differences) not covered in the Detail Type Specification are specified and negotiated separately.

From this standpoint, the multiple airline users are analogous to the multiple NASA Centers who will be using the STS System Specifications. The NASA Centers do not employ a common specification format guide at present. However, NASA Headquarters is in the process of formulating a NASA-wide configuration management policy which, it may be anticipated, will address the specification format question.

Since NASA-wide policy must cover the complete range of center interests, it may be fairly judged the policy will be broad. Secondly, the policy will not be available at the time Phase B is being proposed and negotiated. Therefore, the Space Shuttle Program should proceed to develop a specification philosophy to fit its own unique requirements.

The ATA-100 format is keyed to a numbering system which is applied universally in the system document. For example:

36-10 will always be PNEUMATIC-DISTRIBUTION SUBSYSTEM be the document a specification, parts list, maintenance manual or whatever. This approach is sensible from an operating standpoint.

In the case of the Space Shuttle Program, the organization of ATA-100 is readily adaptable to the systems that will be employed. Further, the Space Shuttle Vehicle will be predominately an airplane. Therefore, a specification approach utilizing commercial practices has the inherent advantages of familiarity by NASA airplane personnel over current military specification practice which would be new to the NASA personnel involved.

Commerical specifications are written by manufacturers to generate new business for airplanes not yet built. The commercial airplane is unrelentingly governed by the FARs with FAA certification an inherent prerequisite to its purchase. Funding of the development is obtained in the commercial market place on the strength of the outstanding airline orders and integrity of the manufacturer. Delivery and performance incentives and penalties are common but negotiated independently with each airline.

These factors jointly and severally make the commercial airplane specification sales and familiarization oriented while diligently reserving to the manufacturer the utmost design latitude.

Department of Defense (DoD) practice can be quite the contrary. A labyrinth of design, construction, analysis, control and performance concepts are in the DoD repertoire. Since significant advances in the technical state-of-the-art become cost plus procurements, their system specifications are freely utilized to specify any and all requirements the government is willing to pay for as opposed to the minimum the manufacturer considers necessary for the airplane to perform its intended function. This is true regardless of contracting agency and in the face of specification practice documents that are no more stringent than ATA-100. Reader is invited to compare ATA-100, AFSCM 375-1, MIL-S-83490, MIL-STD-490, and MIL-STD-832.

An example of what we are talking about is in order. The commercial

specification might say: Exposed metallic surfaces shall be protected from the effects of weather. The DoD counterpart would be: Exposed metallic surfaces shall be protected in accordance with MIL-F. . . and MIL-E . . . . The introduction of specifics concerning protection or finishes is really of questionable benefit to the government. Doesn't the commercial specification buy the same thing? Are the extra specifics and the attendant costs to ensure and verify compliance in the government case necessary? What are the benefits?

This illustrates a point - undue specification elaboration and specifics can create extensive extra costs and time delays without noticeable benefits in the end product hardware. Whether processes and practices comply with invoked requirements specifications is difficult to determine in the first instance since contractor unique procedures are evolved to do a job - paint-plate-annodize etc. in the manufacturing process, not to have specification traceability. Secondly, any given process may perform well even though not in compliance, presenting a dilemma as to processing a specification waiver or changing shop practice and attendant performance certainty. Finally, every step of the shop practice is subject to second guessing by resident quality inspectors against the contract requirements.

These uncertainties can be potentially multiplied several fold in every discipline. The practical solution at the DoD industry bargaining table is to balance the contractor problems and attendant cost and schedule risk against the real motivation for and expected benefit from the requirement; retaining only those requirements whose awards exceed their penalties.

Before the government and industry negotiators can perform this function, they must be aware of what NASA wants. A thorough stratification of technical requirements and priorities should be established and promulgated to the involved personnel. Then industry and government would be in a position to incorporate both requirement and priority factors into the contractual documents while eliminating those requirements not within the criteria.

Thus, the use of the ATA-100 format merits further consideration with elaboration as appropriate to cover the rocket/spacecraft aspects not within ATA-100's present structure. It is anticipated these instances will prove minimal.

Secondly, after determination of requirements and attendant priorities by NASA Management, their inclusion in the contractual instruments and the elimination of requirements not strictly within that requirement/priority stratification after commercial practice merits consideration. The goal would be to follow airline practice by specifying only essential performance features while leaving design choices and techniques to the contractor.

10.4 Program Control - A preliminary survey of commercial and government program control practice was made to determine which techniques showed promise as a means of reducing or controlling program costs, and to recommend their further consideration for application to the Space Shuttle Program.

At the outset, it was anticipated some commonality would be found in successful and unsuccessful programs. This was fallacious. Only broad generalizations can be made applicable to all situations. Detail, significant in one situation, was irrelevant in another.

Commercial airline practice on embryonic airplanes involves a minimum of customer control during the design evolution. Usual airline procedures involve periodic plant visits, primarily sales or familiarization oriented. Primary performance of the aircraft is assured by the necessity of Federal Aviation Agency (FAA) certification and the voidability of certain contract clauses if certification and performance guarantees are not met.

On the Government procurement scene, several program histories and management technique applications are available. Current literature makes clear the Government disenchantment with the procurement practices of the 50's and 60's. These principles failed to guarantee the desired technical, cost, or schedule performance. Congress and the Government Accounting Office (GAO) are particularly critical. We need to innovate and create new and more efficient ways of managing to avoid unnecessary duplication, reduce costs and cost uncertainty, and improve performance and schedule reliability.

Programs such as the Atlas and Titan dual development must be considered in the light of the Cost Ceiling Performance Evaluation (CCPE) concept as discussed by Richard L. Brown (Ref. 10-1). This concept suggests that one of these programs. would have been stopped once clear performance and cost baselines were established. Economies could have been realized by eliminating the luxurious duplication of similar operational systems.

The GAO has favored "Paralled Undocumented Development" (PUD) (Ref. 10-2) as a means of reducing costs and achieving more certainty in performance, schedules, and costs. The undocumented concept affords the contractor the opportunity to be flexible and creative, unhampered by the necessity of building a paper bulwark supporting every decision. Since the TFX, SST, and C5 were all highly studied and documented before go-ahead, one wonders if that paper is worth its cost, since all these programs developed major problems.

It would seem current thinking is reverting to the concept that the only way to be certain of performance, costs, and schedules is to have a prototype

sufficiently developed as to ascertain these factors from experience or extropolation of the specific configuration involved. (Ref. 10-3)

Significant questions and lessons from the government systems world of paper and arrangements versus the real world of people and hardware have been raised by Robert A. Frosch, (Ref. 10-4) Assistant Secretary of the Navy. He states fundamental points which should be kept in mind in formulating a technique of management. They are:

a. "If the system arrangements on paper and the documentation can help make the stuff work, then they are of some use. If they are merely the satisfaction of a requirement, they are only an interference . . ."

b. ". . . It seems quite clear that in most cases, when a system gets into trouble, a competent manager knows all about the problem and is well on his way to fixing it before his management systems ever indicate that it is about to happen."

c. ". . . personal contact is faster than form-filling and the U.S. mails. A Project Manager, who spends his time in his Managment Information Center instead of roving through the places where the work is being done, is always headed for a catastrophe."

d. "There is no sense in optimizing the system beyond the accuracy of the definition of requirements, and I never, or almost never, see a definition or requirements with estimated error limits on them."

Similar down to earth words have been uttered before by many of us in the Aerospace Business. Such fundamentals are recognized in some of the Apollo Management practices. Consider:

a. Standardized monthly financial reporting and accounting procedures as now used throughout the agency to provide good cost, profit, and encumbrance visability of the many contractors.

b. An approach to reliability by learning from failures as opposed to the statistical approach.

c. A scheduling and review procedure linked to the flight schedule-the control emphasis is placed where the payoff is.

d. The monthly Apollo executives meeting of Dr. G. E. Mueller, the daily Apollo Program Office (APO) meetings in Washington, monthly free-for-all reviews of the entire program between Washington-Houston-Huntsville-and Cape Kennedy, and a steady stream of conferences which must have pushed the state-of-the-art in multiple input talking.

e. Utilization of the low-cost audio-visual tele-conferencing system.

These principles and techniques should be considered for application to the Space Shuttle Program.

The use of competition based on the speculative paper analysis approach and the enforcement of contractor promises of performance, price and schedule is a strong tool for defining reasonable extensions of current technology. For a while this system seemed to work, budgets were cut and the time between development and actual production was clipped. There was no longer a problem of choice between prototypes and ditching a contractor with a big investment in a new weapon. However, other problems set in, system after system started running into technical trouble and the cost still exceeded original estimates.

The Honorable David Packard, (Ref. 10-5) current Deputy Secretary of Defense, stated, "I have reached the firm conclusion that we are designing and building weapons that are too complex; and, therefore, too costly. We further compound the problem by trying to produce hardware before its fully developed. . . . We can do a much better job relating production and development." His goal is to achieve realistic production costs and schedules by extending development to include achievement milestones which must be met before production is started. Upward price revisions will be difficult and "buying in" with following large cost overruns will not be tolerated.

The proposition that we are trying to go too far, technically speaking, based on paper studies, to have valid performance, schedule, and cost figures is true as born out by the procurements of the sixties. The previous specification discussion made the point; only specify what is really wanted with attendant priorities and do not compound the design problem by further specifying subservient requirements.

For the Space Shuttle Program, consideration should be given to a similar approach in the management area. Do not specify a given system, specify what it is you want and let the Contractor innoviate to meet your management criteria. Recognize that due to the technology base extension inherent in meeting Space Shuttle Program requirements, adjustments to schedules, plans, individual subsystem performance and configurations etc., will be required to meet the priority performance requirements. Structure the contractual instruments and management restraints such that a reasonable flexibility to apply resources as needed and where needed is open to the contractor. Utilize dedicated and motivated personnel and make free use of the latest audio-visual communication devices to keep in touch.

10.5 Reliability Analysis - The mission success and crew safety goals desired for the shuttle program, dictate that stringent design guidelines be introduced and followed during the course of the study.

The failure modes of the major contributing subsystems in each mission phase were reviewed. Redundant components, either passive or active, or functional path redundancies were incorporated. Single point failure areas were either eliminated during design or controlled in such a manner as to remove serious impact on the success of the mission or safety of the crew.

One of the basic groundrules followed during the conceputal design, was that mechanical, electro-mechanical and fluid subsystems should be fully redundant; i.e., the first critical component failure allows continuance of function and the second such failure permits safe subsystem operation. Avionics design requires a fail operational, fail operational, fail safe sequence, which can be readily accomplished with present day hardware and redundancy techniques. With the advent of large scale integrated circuits, this criteria should be met with even lesser penalties for weight, power consumption & complexity.

The total program concept requires operational performance of the shuttle vehicle to be comparable to that of commercial airlines. To achieve reliability and safety attained by the commercial airlines many of the tried and proven techniques of design, manufacture, operation and servicing will be incorporated into the shuttle program with appropriate changes which are required because of unique operational environments. The changes will be identified and recommendations made so that the high probability of mission success and crew safety can be attained.

10.5.1 Reliability Criteria and Goals - The reliability goal selected is consistent with current capabilities and is that the operational vehicle have a .95 probability of successfully completing the mission. With the redundancy techniques available and applied to the subsystem design and with the use of present day, hi-rel components, this goal is feasible and can be achieved.

The operational requirements dictate a low cost, fully reusable spacecraft to be operated as an air transport, with minimum turnaround, minimum maintenance between missions. Using these operational constraints, subsystem designs were reviewed with the failure-tolerant criteria in mind, i.e., fail operational, fail safe sequence for mechanical and fluid subsystems, and fail-operational, fail safe sequence, for the integrated avionics subsystems.

10.5.2 Subsystem Apportionments - Reliability goals for major mission events were based on the mission success goal of .95 and are presented in Figure 10.5-1. The 12% contingency in the mission reliability goal is available to account for operational and equipment details unknown at this point and which will be defined later.

The goal was also apportioned to establish subsystem reliability requirements for both the booster and orbiter vehicles during the typical mission. The results of this second task are shown in Figure 10.5-2 for the booster vehicle and Figure 10.5-3 for the orbiter. The total subsystem requirements for mission success is a combination of the requirements of each phase. For example, the total ECLSS apportionment for the booster would be .9984 and for the orbiter .9957. The difference between the booster requirements and that of the orbiter is due primarily to the number of systems functioning, the longer operational time for the orbiter, and the reentry environment that the booster does not experience in the normal mission.

10.5.3 Subsystem Estimates - Preliminary subsystem designs have been examined for feasibility of concept, compliance with redundancy requirements, and single point failure elimination. To the extent permitted by design definition, preliminary reliability estimates have been made and compared to the subsystems' reliability requirement. An example of the method used in developing an estimate is shown for the electrical power subsystem (EPS) of the orbiter vehicle.

The Electrical Power Subsystem for the orbiter vehicle is a fully redundant, four stack fuel cell design with peak/emergency power requirements backed up by either of two batteries. Two primary DC buses operate in parallel with a bus tie relay providing the crossover path. Each primary bus distributes power to dual inverters and a secondary (non-essential) DC bus. Both pairs of inverters provide 3Ø, AC power to redundant AC primary buses with a bus-tie relay provision. All elements are easily isolated from the system by power relays, in the event of malfunction. Power distribution beyond this point, to avionics, propulsion, instrumentation and ECLSS subsystems, is not included in this analysis. Refer to section 7.7 for a more complete description of the EPS.

The preliminary reliability estimate for mission success is .99864 which closely approximates the total subsystem goal established for the orbiter. Figure 10.5-4 is a simplified reliability diagram of the system.

The major component of the system and the failure rates or success probabilities used in this analysis are listed in Figure 10.5-5. The equipment application

MISSION RELIABILITY APPORTIONMENT
Mission Reliability Required = 0.95

MISSION PHASES (MAJOR ONLY)	RELIABILITY APPORTIONMENT STAGE 1 (BOOSTER)	STAGE 2 (ORBITER)	TOTALS
1. LAUNCH (BOTH STAGES)	0.995	0.995	0.990
2. SEPARATION (BOTH STAGES)	0.995	0.995	0.990
3. ON-ORBIT (STAGE 2)		0.990	0.990
4. ENTRY (STAGE 2)		0.990	0.990
5. LANDING (STAGE 2)		0.999	0.999
6. SUB-ORBITAL MANEUVER (STAGE 1)	0.998		0.998
7. LANDING (STAGE 1)	0.999		0.999
TOTAL	0.987	0.969	0.956

MISSION RELIABILITY DESIGN GOAL = 0.956

Figure 10.5-1

RELIABILITY APPORTIONMENTS BY SUBSYSTEM

STAGE (1) BOOSTER RELIABILITY REQUIREMENTS = 0.9870

SUBSYSTEM IDENTIFICATION	MISSION PHASE AND MAJOR EVENTS			
	LAUNCH	SEPARATION	SUB-ORBITAL MANEUVER	LANDING
ECLSS	0.9986	0.9999	0.9999	1.0
ELECTRICAL POWER	0.9999	0.9999	0.9998	1.0
PROPULSION	0.9980	0.9999	0.9995	0.9999
GUIDANCE AND CONTROL	0.9990	0.9970	0.9999	0.9998
TELECOMMUNICATION	0.9997	0.9999	0.9997	1.0
LANDING SYSTEM	N/A	N/A	N/A	0.9996
ONBOARD CHECKOUT	0.9999	0.9999	0.9999	1.0
AERO CONTROL	N/A	N/A	0.9994	0.9998
SEQUENTIALS, HYDRAULICS, THRUSTERS AND MECHANICAL	0.9999	0.9985	0.9999	0.9999
RELIABILITY PHASE REQUIREMENTS	0.995	0.995	0.998	0.999

Figure 10.5-2

RELIABILITY APPORTIONMENTS

BY SUBSYSTEM

STAGE (2) ORBITER RELIABILITY REQUIREMENTS = 0.969

SUBSYSTEM IDENTIFICATION	MISSION PHASE AND MAJOR EVENTS				
	LAUNCH	SEPARATION	ON-ORBIT	ENTRY	LANDING
ECLSS	0.9986	0.9999	0.999	0.9982	1.0
ELECTRIC POWER	0.9999	0.9999	0.9997	0.9995	1.0
PROPULSION	0.9980	0.9999	0.9949	0.9985	0.9999
GUIDANCE AND CONTROL	0.9990	0.9970	0.9980	0.9947	0.9998
TELECOMMUNICATION	0.9997	0.9999	0.9994	0.9996	1.0
LANDING SYSTEM	N/A	N/A	N/A	N/A	0.9996
ONBOARD CHECKOUT	0.9999	0.9999	0.9990	0.9999	1.0
AERO CONTROL	N/A	N/A	N/A	0.9989	0.9998
SEQUENTIAL, SEPARATION THRUSTERS, AND MECHANICAL DEVICES	0.9999	0.9985	N/A	0.9987	0.9999
RELIABILITY PHASE REQUIREMENT	0.995	0.995	0.990	0.990	0.999

Figure 10.5-3

RELIABILITY DIAGRAM
ORBITER – ELECTRICAL POWER SUBSYSTEM

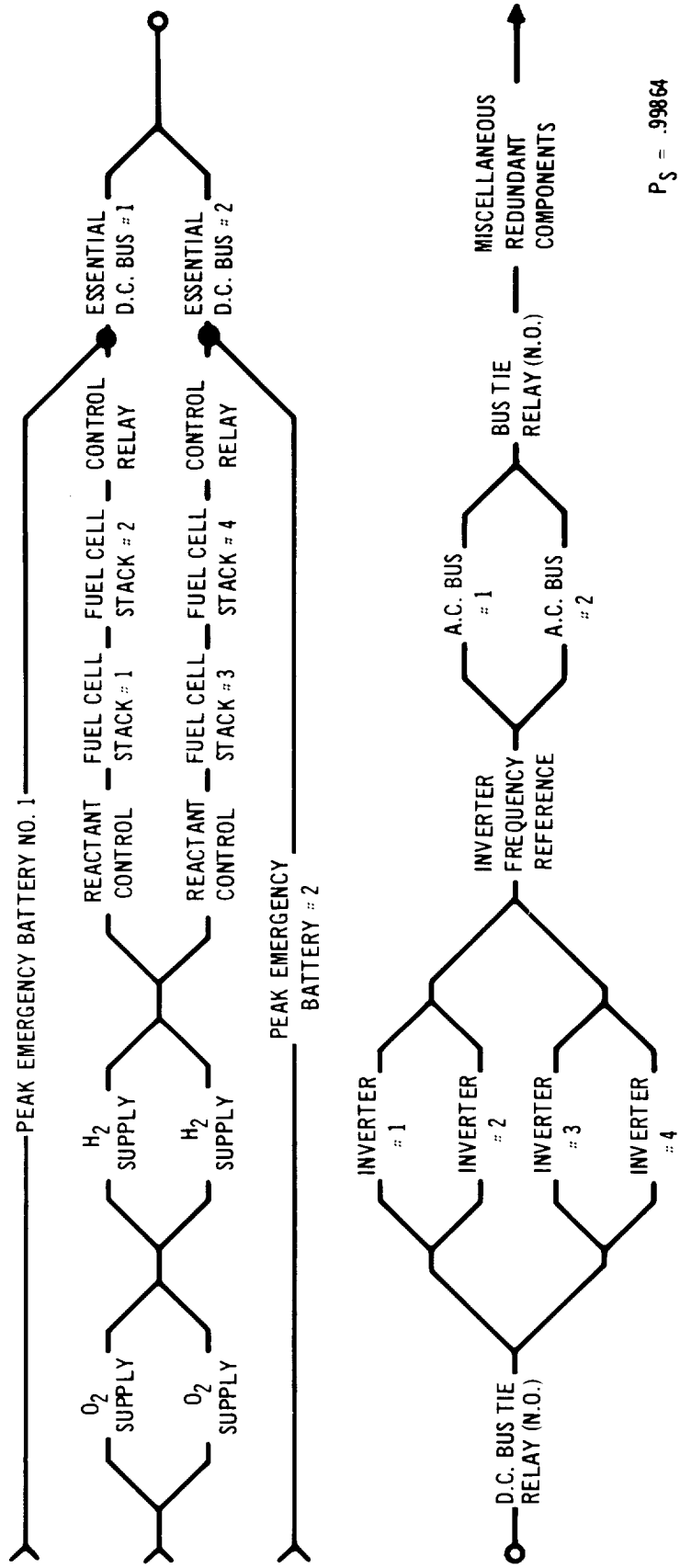

Figure 10.5-4

COMPONENT RELIABILITY DATA

COMPONENT	FAILURE RATE X 10^5 HOURS	PROBABILITY OF SUCCESS	DATA* SOURCE
1. O_2 TANKS AND PLUMBING	.20		M
2. H_2 TANKS AND PLUMBING	.20		M
3. REACTANT CONTROL	5.50		V
4. FUEL CELL STACK	12.30		V
5. CONTROL RELAY		0.99999978/CY	M
6. DC BUS		0.99999	M
7. DC TO AC INVERTER	10.70		M
8. AC BUS		0.99999	M
9. BUS TIE RELAY		0.99999934/CY	M
10. BATTERY (6.0 KWH EACH)		0.9950	M
11. MISCELLANEOUS COMPONENTS (WIRING, CONNECTORS, SWITCHES)		0.99999	
12. INVERTER FREQUENCY REFERENCE (INTERNALLY REDUNDANT)		0.99999	M

* DATA SOURCE:

M = MDAC EXPERIENCE

V = VENDOR DATA

Figure 10.5-5

factors (Kapp), listed in Figure 10.5-6 were applied to the equipment with time considerations of launch/ascent equal to 8 hours, orbit 160 hours, and the remaining 2 hours for entry and landing. Figure 10.5-7 is the element mission reliability total with all redundant paths considered in each elements' estimate.

APPLICATION FACTORS (K_{APP})

EQUIPMENT TYPE	MISSION PHASE			
	LAUNCH	ORBITAL	ENTRY	LANDING
MECHANICAL	500	1	100	100
ELECTRO-MECHANICAL	100	1	20	1
ELECTRONIC	15	11	3	1

Figure 10.5-6

ELEMENT RELIABILITY

COMPONENT	MISSION RELIABILITY ESTIMATE*
O_2 SUPPLY	.99980
H_2 SUPPLY	.99980
REACTANT CONTROLS	.99951
BATTERY (REDUNDANT)	.99995
RELAY (20 REQUIRED)	.99999
FUEL CELL REDUNDANT (BATTERY BACKUP)	.99995
INVERTER FREQUENCY REFERENCE	.99999
DC TO AC INVERTERS (REDUNDANT)	.99967
MISCELLANEOUS SWITCHES, WIRING AND CONNECTORS	.99999
BUS (AC AND DC) REDUNDANT	.99999
ESTIMATE TOTAL P_S =	.99864

*EQUIPMENT REDUNDANCIES INCLUDED IN ESTIMATE

Figure 10.5-7

10.6 Test and Checkout - The operational concept for test and checkout is primarily based on the use of the Onboard Checkout System (OCS) and minimal support from Ground Support Equipment (GSE). The concept as described starts with the post-landing phase and carries through the pre-launch operations. The major operations of the post-landing activities consist of safing the vehicle, crew egress, securing the propulsion system, removal of the payload and towing of the vehicles to the maintenance area. In the maintenance area, the subsystem scheduled and unscheduled maintenance and functional checks will be performed. For example, faulty hardware will be replaced and/or repaired and retested as required. When the total vehicle maintenance is completed, the vehicles are moved to the "pre-pad" facility area where they are subjected to pre-stage mating tests. The orbiter cargo module will be installed prior to these tests. The vehicles are then mated and a post mate integrated test is performed. Servicing of consumables (less cryo) and pyro installations will then be performed just prior to moving out to the pad.

Pad operations begin with the hookup of the required Ground Support and Facility equipment. Upon completion of this operation, power on range and guidance checks and propulsion systems checks will be conducted. Final systems checkout and guidance update are then performed prior to crew egress and cryo loading. Upon completion or near completion of the cryo loading, the crew boards and all GSE not required is removed and the terminal countdown commences followed by the launch.

10.6.1 Test and Checkout Philosophy - The operational concept closely parallels the activities required to prepare commercial airliners for flight except for the handling and vertical erection of the vehicle. Gemini and Apollo experience was heavily drawn upon in the examination of adapting current airline checkout and servicing techniques to the Space Shuttle. The elements of the plan are structured about the use of on-board checkout system (OCS) and minimal support from the ground. It will be necessary to greatly simplify the Ground Support Equipment and the handling and servicing techniques in order to make it possible to complete the required tasks in the short time periods. The GSE will be of the portable roll-around type to complement the onboard checkout concept. The capability to implement the operational concept noted above in the short time periods being contemplated will be greatly enhanced by the "Factory to the Pad" concept that is employed at the home-sites. This concept assures maximum

possible efficiency of the vehicle upon arrival at the operational site. Specialized testing such as Electro-Magnetic Interference (EMI) and systems calibrations against known standards will be accomplished at the home sites prior to delivery. The factory to pad concept is evolved from the various phases of home site test activities that follow:

a. Factory Final Assembly - Factory final assembly consists of those tests conducted by manufacturing and comprise the final manufacturing buy-off. The prime purpose of these activities is to assure static integrity of the fluid and gas systems prior to starting factory acceptance checkout. Each vehicle will be assembled to completion (less servicing) during factory final assembly.

b. Factory Acceptance Checkout - Factory acceptance checkout is to be treated as pre-launch testing. This provides a "Factory to Pad" operations which assumes maximum possible efficiency of the vehicles upon arrival at the launch site. Component level, detail subsystem, and total system checkout will be performed as part of the factory acceptance checkout phase as detailed below. Any specialized testing such as electromagnetic compatibility (EMC) will also be accomplished during this phase. Checkout must be a comprehensive, in-depth penetration into all possible problem areas. Also, design deficiencies, manufacturing discrepancies and equipment malfunctions must be detected and corrected. The onboard checkout system supplemented by roll-around GSE will be utilized to the utmost for checkout and fault isolation. Interface simulators (roll-around GSE) will be utilized during this phase to eliminate problems at the launch site during mating of the stages.

1. Component Testing - Individual components will be thoroughly tested and checked out prior to installation. Majority of the component tests will be done by the vendor, prior to shipment, utilizing his specialized test equipment, personnel, and facilities. All testing and calibrations performed by the vendors will be done in accordance with approved specifications. Equipment functional checks (EFC) will be performed by the contractor on components prior to their installation into the vehicles. An EFC is a test whereby components are verified for a correct indication or response due to a known input. These pre-installation tests should also be performed on spares

periodically. Electrical wiring will be thoroughly checked and verified prior to installation.

2. Subsystem Testing - The use of the on-board checkout system will be utilized in the same manner as it would be used on a total systems test whenever possible. The use of the portable GSE will be more predominant during this phase particularly in the mechanical subsystem verification such as leak detection where techniques that are not adaptable to the OCS are required. Also in the electrical/electronics area, the GSE would be used to support fault isolation as well as simulation of interfaces and sensor calibration. Mechanical subsystems that have been verified will be capable of utilizing the OCS to monitor and/or track the subsystem behavior or its characteristics.

3. Systems Testing - Systems testing will be accomplished primarily using on-board controls, displays, and OCS. It will closely parallel the activities required to prepare commercial or military aircraft for flight. A minimum amount of specialized GSE will be required to support this phase of testing.

c. Pre-Pad Operations - Pre-pad testing will be accomplished primarily using on-board controls, displays, and OCS. Proven software and procedures, verified during subsystem and system testing at the contractors' facilities, will be utilized. Sequence of major operations is noted in the operational concept.

d. Pad Operations - Pad tasks will be limited to those tasks that cannot possibly be performed in advance of moving the vehicle to the launch complex. The launch schedule should be structured to provide the shortest on-pad time possible.

11. FACILITIES REQUIREMENTS

The facilities requirements for fabrication, assembly, ground test, flight operations and recertification of the booster and orbiter vehicles was considered. The assumptions used in the analysis were (1) maximum use of existing facilities; (2) total McDonnell Douglas Corporation government and vendor testing capabilities are at the disposal of this program; (3) factory-to-pad flow; (4) minimized cost; (5) 24 hours on pad; and (6) approximate 2 week recertification period. The following paragraphs briefly discuss the considerations applicable to these facilities.

11.1 Manufacturing and Assembly - Final assembly location should be primarily a trade off between facility cost and the contracts resulting from recertification maintenance during recycle. Figure 11-1 summarizes the "pros" and "cons" of potential final assembly areas. The Corps of Engineers standard 40 ft truss height for federal buildings results in a requirement for facility and modification or new facility with adequate truss height.

The following are final assembly facility alternatives:

- Minimum Expenditures - Tulsa facility can be modified by either raising the roof or providing a trough and ramp for the required high-bay area. First flight would be made from Tulsa International.
- Minimum Schedule Interference - TICO facility utilization will require a new building, the use of the NASA Causeway (Orsino Road) and the modernization of the Titusville/Cocoa Airport or similar landing field provided by KSC.
- Maximum Use of NASA Facilities - Michoud could be used as a final assembly facility by raising the roof of existing buildings or putting a trough in the building floor. This selection would use only barge transportation and first flight would be made from KSC on the airfield used for the operational phase.

11.2 Ground Test - It is estimated that the existing corporate and Government facilities will require very minimal (if any) modifications for materials design information, structural testing of components elements and representative structural sections, and escape system sled tests.

FINAL ASSEMBLY FACILITY STUDY

FINAL ASSEMBLY	PRO	CON
TULSA	• EXISTING FACILITIES WITH NO SIGNIFICANT ACTIVITY (DAC HAS LONG TERM LEASE) • FACILITIES CAN BE MODIFIED BY RAISING ROOF OR LOWERING FLOOR • GOOD LANDING STRIP – 10,000' WITH 400,000 # TWIN TANDUM • OVERHAUL FACILITIES IN AREA • NEAR ST. LOUIS	• FACILITY MODIFICATION REQUIRED – USAF OWNERSHIP • DISTANCE TO PROTO-TEST SITE • REMOTE FROM SHUTTLE OPERATION FOR REFURBISHMENT • POPULATED AREA ADJACENT TO RUNWAY • PERSONNEL AVAILABILITY MAY BE A PROBLEM • NO BARGE FACILITIES
PALMDALE	• NO SUBSTANTIAL PROGRAMS (DAC ASSIGNMENT) • ADEQUATE FACILITIES FOR F/A • ADDITIONAL GOVERNMENT FACILITIES AVAILABLE PRESENTLY USED BY LOCKHEED • 25 MILES FROM EAFB (CLOSE TO WTR AND EAFB FOR REFURBISHMENT) • UNPOPULATED AREAS	• FACILITY MOD. REQUIRED – USAF OWNERSHIP • REMOTE FROM ETR OPERATION FOR REFURBISHMENT • NO BARGE FACILITIES • REMOTE FROM ST. LOUIS • ALL-UP WEIGHT LIMITATION 245,000# ON THE AIRFIELD
ST. LOUIS	• BASE OF OPERATIONS WITH SUPPORT FACILITIES AND PERSONNEL • 10,000' R/W (330,000 # TWIN TANDUM)	• POPULATED AREAS ALL OVER • REMOTE FROM SHUTTLE OPERATIONS FOR REFURBISHMENT OF EITHER ETR OR WTR • NO BARGE FACILITIES • NEW FACILITIES REQUIRED MOST LIKELY • DISTANCE TO PROTO-TEST SITE
TICO	• CLOSE TO ETR • SURFACE TRANSPORTATION TO LAUNCH SITE • SKILLS AVAILABLE • FAVORABLE REACTION ANTICIPATED FROM NASA • AVAILABLE FOR REFURBISHMENT FOR ETR OPERATIONS • PROTOTYPE ASSY. COULD GO TO MSOB AND VAB	• NEW FACILITY REQUIRED • NEW RUNWAYS AND LANDING AIDS (KCS OR TICO) • REMOTE TO ST. LOUIS • NO EXISTING BARGE FACILITIES
MICHOUD	• FACILITIES AVAILABLE • GOOD SERVICES AVAILABLE • PEOPLE AVAILABLE • BARGE FACILITIES • UTILIZATION OF NASA FACILITIES	• REQUIRES ROOF MOD • NO RUNWAY AVAILABLE • REMOTE TO ST. LOUIS • REMOTE FROM SHUTTLE OPERATIONS
HUNTINGTON BEACH LONG BEACH	• NOT CONSIDERED BECAUSE OF LACK OF TRANSPORTATION FACILITIES • NOT CONSIDERED BECAUSE OF FABRICATION OF DC-10	

Figure 11-1

Our vibration and acoustic ground test facilities may require modification to enlarge their specimen and spectrum capabilities. This could include: a larger shock test machine, a 15K lb high acceleration shaker system, larger landing gear impact and drop test facilities, and 10K cubic feet acoustic test chamber facility.

It is assumed that separate orbiter and booster test positions for main propulsion systems will be needed to allow a parallel development. Booster and orbiter development and acceptance testing at MSFC and/or MTF is probably feasible. Trade studies during Phase B will determine the most advantageous approach to site utilization considering separate or combined development and operational sites. The test stands of Beta complex (S-IV-B) of our Sacramento Test Base (California) offer potential for development tests of the orbiter. Testing of the orbiter propulsion on the launch pad is not considered firm because special adaption hardware would be required between orbiter and launch pad. Study of launch pad cooling capabilities is required to determine the extent of firing that would be practical for the booster.

Based on these considerations it is likely that the MSFC and/or MTF test stands would be modified to permit either orbiter on booster acceptance firing tests, and that the MDAC Sacramento test base be modified to permit orbiter development tests. A trade study to determine the cost effectiveness of building a new runway at Michoud to support acceptance testing will be a requirement of Phase B studies.

11.3 Flight Test - Facility modification requirements for the horizontal flight test program, which is recommended to be conducted at EAFB/FRC, will be minimal. Hangar modifications and some revisions to servicing facilities will be required due to the size of the flight articles.

Minimum modifications are required at KSC and the supporting tracking network to support the vertical flight tests.

11.4 Operations - It is recommended that KSC be used as the vertical flight test facility (as mentioned above) and for program operation. The modifications required for these phases of the program are essentially the same but the occupancy need date will be established by the flight test program.

There are two modification approaches which should be considered in the Phase "B" trade studies, they are: (1) on-pad build-up, (2) pre pad build-up. Suggested modification in the next paragraphs are based on the assumptions that (1) the Vehicle Assembly Building (VAB) and crawler will be available, (2) vehicle quantities - 3 boosters and 5 orbiters maximum, (3) booster wing would have wing folds or splices, (4) annual launch rate of 12.

11.4.1 On-Pad Build-Up - These modifications would be required if the VAB is utilized for payload, preflight, maintenance and turnaround activities.

Vehicle Assembly Building (VAB)

- o Transfer aisle-enlarge door openings and put in additional utility services
- o Low bay area - open up cell area and modify cranes for payload operations
- o High bay area - modify cell/transfer aisle dividing wall

Launch Pad

- o Modify basic hard stand area
- o Add new tiedown mounts
- o Add new erection devices
- o Add new mobile towers (2)
- o Modify propellant service system

11.4.2 Pre Pad Erection

Vehicle Assembly Building (VAB)

- o Modify transer aisle door openings
- o Modify lower bay cell area for payload operations
- o Modify cell/transfer aisle dividing wall and remove or relocate extendable playform.

Mobile Launcher/Crawler Transporter

- o Launcher umbilical tower - Remove majority of the swinging arms and reconfigure and relocate two of the arms.
- o Launch deck - Remove majority of existing equipment and modify, deck in vehicle engine chamber and hold down devices.

Launch Pad Area (Pad B)

- o Extend services to vehicle interfaces

Landing Site

- o Build new 10,000 foot instrumented runway and deservicing area.

12. REFERENCES

Reference Numbers	Title
3-1	Structure Handbook. MAC Report No. 339, Revised 2 January 1969
3-2	Metallic Materials and Elements for Flight Vehicle Structure. MIL HDBK 5A, August 1962
3-3	Roark, R. J.: Formulas for Stress and Strain. Fourth Edition
3-4	Structural Analysis Bulletins. MAC Report No. 338, Revised 2 January 1969
3-5	Bruhn, E. F.: Analysis and Design of Flight Vehicle Structures. Revised edition.
3-6	Fabrication of Laminates. MAC P.S. 14034, Revision B. March 1967
3-7	Core Material, Fabric Reinforced Plastic Honeycomb. MNS703, Revision A, May 1967
4-1	Preliminary Data from the Low Speed Static Force Tests in the Langley Low Turbulence Pressure Tunnel on an 0.02 Scale Model of a Proposed MSC Orbiter Shuttle Configuration. MSC Memo No. EX24/6908-171C, 6 August 1969
4-2	Progress Report on Ames Transonic 6-by-6-foot Test of the Two Percent MSC Orbiter. MSC Memo No. EX24/690/6909-237B, 23 September 1969
4-3	Preliminary Data Near Mach 20 from the Langley 22-inch Helium Tunnel for the MSC May 1969 and August 1969 Baseline Orbiter Space Shuttle Configurations, (Test Series S-IV). MSC Memo No. EX24/6909-226C, 16 September 1969
4-4	Hypersonic Arbitrary-Body Aerodynamics Computer Program. McDonnell Douglas Report DAC 61552, Volumes I and II, April 1968
4-5	USAF Stability and Control DATCOM. USAF (WADD) TR-60-261, Volumes I and II, revised August 1968

Reference Numbers	Title
4-6	High Lift Aerodynamics Handbook. McDonnell Douglas Report EN-552, revised 29 December 1967
4-7	Abbott; and von Doenhoff: Theory of Wing Sections. Dover Publications, Inc., 1959
4-8	Summary of Airfoil Data. NACA Report No. 824, 1945
4-9	Winter, H.: Flow Phenomena on Plates and Airfoils of Short Span. NACA TM 798, July 1936
4-10	Sarphaya, Targat: Separated Flow About Lifting Bodies and Impulsive Flow About Cylinders. AIAA Journal, Vol. 3, March 1966, pp. 414-420.
4-11	Polhamus, Edward C.: Effect of Flow Incidence and Reynolds Number on Low Speed Aerodynamic Characteristics of Several Non-Circular Cylinders with Applications to Directional Stability and Spinning. NASA TR R-29, 1959.
4-12	Delaney, Noel K.; and Sorensen, Norman E.: Low Speed Drag of Cylinders of various Shapes. NACA TN 3038, November 1953
5-1	Preliminary Performance Results for a 12.5K Logistics Vehicle with Wings and Including Heat Protection Weight. NASA-MSC Memorandum EX24/6908-196C, 20 August 1969.
5-2	Detra, R. W.; and Kemp, N. H.; and Riddle, R.F.: Addendum to Heat Transfer to Satellite Vehicles Reentering the Atmosphere, 1957.
5-3	Fehrman, A. L.: FDL-7MC Thermodynamic Test Data Volume IV. Lifting Reentry Test Vehicle Preliminary Designs for FDL-7MC and FDL-SMA Configurations. McDonnell Douglas Report AFFDL-TR-68-97, January 1969.
5-4	Thomas, A. C.; Perlbache, A.; and Nagel, A. L.: Advanced Reentry Systems Heat Transfer Manual for Hypersonic Flight. Boeing Report AFFDL-TR-195, October 1966.

Reference Numbers	Title
6-1	Advanced Logistics Spacecraft System. Volume III of Mission and Spacecraft Performance Analysis, McDonnell Douglas Final Report F738, 31 October 1967.
8-1	IBM 7094 Computer Program T574-Planar Launch Optimization. MDAC-ED Memo No. AD-2170, 6 April 1965.
8-2	Six-Degree of Freedom Flight-Path Study Generalized Computer Program. USAF (WADD) TR-60-781, November 1960.
8-3	Flying Qualities of Piloted Airplanes. MIL-F-8785B (AS6) Military Specification.
8-4	Handling Qualities Requirements for Hyper-Velocity Aircraft. Cornell Aeronautical Laboratory Report TC-1332-F-1, Revised 28 January 1960.
10-1	Brown, Richard L.: A Study of the Use of Competition in Space Shuttle Program. NASA Headquarters, August 1969.
10-2	Evaluation of Two Proposed Methods for Enhancing Competition in Weapons Systems Procurement. General Accounting Office, Report No. B-39995, 14 July 1969.
10-3	Prototype Shopping Comes off the Shelf. Business Week, 20 September 1969.
10-4	Frosch, Robert A. (Assistant Secretary of the Navy): A New Look at Systems Engineering. IEEE Spectrum, September 1969.
10-5	Packard, (Honorable) David: Address before Aerospace Industries Association, 22 May 1969.