Report MDC E0056

[redacted]

N70-31599

NASA CR 102088

A TWO-STAGE FIXED WING SPACE TRANSPORTATION SYSTEM

FINAL REPORT

Volume III Mass Properties

Contract No. NAS 9-9204 Schedule II

MCDONNELL DOUGLAS CORPORATION

COPY NO. 196

Report MDC E0056
15 December 1969

A TWO-STAGE FIXED WING SPACE TRANSPORTATION SYSTEM

FINAL REPORT

Volume III Mass Properties

Contract No. NAS 9-9204 Schedule II

MCDONNELL DOUGLAS CORPORATION

FOREWORD

This report in three volumes, summarizes the results for a McDonnell Douglas Phase A study of a Two Stage-Fixed Wing Space Transportation System for NASA MSC, and is submitted in accordance with NASA Contract NAS9-9204 Schedule II. The three volumes of the report are: Volume I - Condensed Summary; Volume II - Preliminary Design; Volume III - Mass Properties. This is Volume III which presents a summary of the mass properties data.

This was a five month study commencing 16 July 1969 with the final report submitted on 15 December 1969. The objectives of the study were to provide verification of the feasibility and effectiveness of the MSC in-house studies and provide design improvements, to increase the depth of engineering analyses and to define a development approach. The preliminary design was to be accomplished in accordance with the design requirements specified in the statement of work, and with more detailed requirements provided by MSC at the outset of the study.

After the study had progressed to about the mid-point, NASA redirected the study from a baseline 12,500 lbs payload orbiter to a 25,000 lbs payload orbiter and changed the payload compartment size from 11 ft diameter by 44 ft, long to a 15 ft diameter by 60 ft long. Directly after this change the program was interrupted so that MDAC could respond to special emphasis requirements imposed by the September Space Shuttle Management Council Meeting.

In the interest of clarity and expediting the report, the additional configurations studied will not be covered in the document. Only the configuration having a 25,000 lbs payload in a 15 ft diameter by 60 ft long payload compartment is described in this report. However the information on other configurations had been transmitted previously to NASA as the work progressed.

The study included eight tasks: Flight Dynamics Analysis, Thermal Protection System, Subsystem Analyses, Design; Mass Properties Analysis; Mission Analysis; Design Sensitivity Analyses; and Programmatic Analyses.

The study was managed and supervised by Winston D. Nold, Study Manager of McDonnell Douglas Astronautics Company - Eastern Division. NASA technical direction was administered through James A. Chamberlin, and contractual direction was provided by Willie S. Beckham from NASA Manned Spacecraft Center.

TABLE OF CONTENTS

LIST OF EFFECTIVE PAGES

i through ii

1 through 39

1. SUMMARY

The growth of future manned space exploration is dependent upon the development of a reusable space transportation system with operational practices similar to present day aircraft procedures. Such a system could achieve a dramatic reduction of operational costs and allow a rapid expansion of space flight.

A two stage configuration satisfying these requirements has been conceived by NASA-MSC. An important feature of this configuration is that both the orbiter and booster have fixed wings and tail and look similar to conventional aircraft. The fixed wing provides good subsonic cruise and horizontal landing characteristics which are very similar to present day high performance aircraft.

The ability to enter the atmosphere with a fixed wing is made possible by configuring the vehicle to be aerodynamically stable at high angles of attack of approximately 60°. This effectively exposes only the bottom surface to the entry heating, which in turn is also considerably reduced because of the low planform loading. Sufficient analysis has been accomplished to show that this concept is feasible. A vehicle can be aerodynamically configured to have a hypersonic through subsonic velocity high α trim point and also be able to fly subsonically at a trim low α.

A reaction control system is used to provide on-orbit attitude control and terminal rendezvous and docking translation ΔV. The RCS also provides attitude damping and roll attitude control for lift vector orientation about the velocity vector during entry.

Designs of both stages incorporate conventional structural design techniques. The fixed wing is of conventional construction, except for the heat protection. The fuselage uses an integral tank structure with associated frames to pick up the concentrated loads. The fan cruise engines are fixed in the forward fuselage which aids in balancing the vehicle and simplifies the installation. The primary heat protection is provided by silica cloth faced hardened insulation and pyrolized carbon laminate composite.

We have concluded that this concept is a viable configuration. The technical analysis and design results bear this out. As appropriate, pertinent analyses and data generated by the NASA-MSC in-house study is included in the report.

2. MASS PROPERTIES REVIEW

Efforts have been directed toward defining a realistic and achievable weight for the specific points design undertaken. Initial work was on a 12,500 pound payload vehicle which was worked in detail. Later efforts turned to a 25,000 pound payload vehicle. Initial sizing of this vehicle was based upon parametric analysis of the 12,500 pound vehicle. Again a detail point design was pursued to insure that the configuration mass properties were adequately defined and achievable. Results of this work show:

- Careful attention must be given to the structural details to minimize weight in body structure, wing, tails, and landing gear.
- Minimum weight approaches must be used in the thermal protection system with particular care given to shingle attachment to the body.
- Propulsion feed systems, pressurization systems, engines, and gimbal systems must be minimized from a weight viewpoint.
- Remaining systems do not "drive" the design.
- Careful packaging must be done to meet center of gravity requirements.

The structural weight in the orbiter can be traded pound for pound with payload or about 35 pounds of gross launch weight per pound of structure. In order to keep cargo weight up and gross launch weight down the structure must be analyzed with minimum weight in mind. Frame spacing is important to the structural strength of the vehicle but also to the thermal protection system support weight. Care must be taken that frame spacing is not too great hence forcing the thermal protection support weight up. Twenty inches has been used in this analysis to provide a reasonable balance between T.P.S. and structure weight. The propulsion systems inerts make up twenty eight percent of the orbiter landing weight (less payload) and hence must be given careful consideration. Also due to their large inert weight these systems must be balanced about the required center of gravity as closely as possible. All other systems in the orbiter make up less than ten percent of the landing weight (less payload). Therefore a final configuration is not highly dependent on any of these systems and major effort was not placed here except to define a reasonable value and insure that its center of gravity is defined. Center of gravity requirements

to meet aerodynamic criteria have caused concern throughout the study. The vehicle must be densely packaged in the nose area and large weights must be balanced about the required center-of-gravity.

Group weight summaries and mission histories are shown in Figures 1 and 2 for the 12,500 pound and 25,000 pound payload vehicles.

Various methods have been used to determine the vehicle weight. Body structure on the orbiter was analyzed by the structure group and then weighed based upon calculated gages. A multiplying factor was used to account for off-optimum design and splices, fittings, attachment and other non-analyzed items. This factor was 1.28 in complex areas i.e., thrust structure/tail pick-up. In the "clean" tank area a multiplier of 1.10 was used. Booster structure was parametrically evaluated based upon analysis of other configurations studied and load data for the booster. Engine data was used from vendor estimates based upon thrust levels and expansion ratio. The approximate ratios defining the methodology used are shown in Figure 3.

WEIGHT SUMMARY

	25K PAYLOAD		12.5K PAYLOAD	
GROUP	ORBITER	BOOSTER	ORBITER	BOOSTER
BODY STRUCTURE	39,180	92,700	24,070	49,100
WING	14,700	37,410	7,100	15,120
TAIL	6,740	16,640	1,870	3,780
THERMAL PROTECTION	18,450	30,130	9,800	15,390
LANDING GEAR & DRAG CHUTE	6,400	12,750	3,800	6,600
MAIN PROPULSION SYSTEM	16,600	75,885	9,320	33,600
AIR BREATHING ENGINES & SYSTEM	14,700	30,510	7,620	17,800
RCS & TANKS	2,500	3,500	1,500	1,500
AERODYNAMIC CONTROLS	2,700	4,650	1,000	2,300
HYDRAULIC SYSTEM	1,590	2,930	500	900
ELECTRICAL POWER SYSTEM	3,280	3,000	3,000	1,760
G&N, INSTRUMENTATION, COMMUNICATIONS, CREW STATION & CONTROLS, & ECS	4,260	2,605	2,820	1,450
RESIDUALS	1,540	3,400	600	2,600
RESERVE	600	1,200	1,700	5,000
CREW & EQUIPMENT	600	0	600	0
CONTINGENCY	0	0	0	0
LANDED WEIGHT – POUNDS	133,840	317,310	75,300	156,900

Figure 1

WEIGHT SUMMARY

CONFIGURATION	25K PAYLOAD		12.5K PAYLOAD	
	ORBITER	BOOSTER	ORBITER	BOOSTER
LANDED WEIGHT LESS PAYLOAD	133,840		75,300	
PAYLOAD	25,000		12,500	
LANDED WEIGHT	158,840	317,310	87,800	156,900
FLY-HOME PROPELLANTS	3,070	80,000	1,500	11,400
FLUID LOSSES	11,910	17,420	8,000	11,700
ON-ORBIT MANEUVER (ΔV – 2000 FPS)	28,460		14,780	
ORBIT INJECTION WEIGHT	202,280		112,080	
INJECTION PROPELLANT (ΔV–15,965 FPS)	400,000		247,830	
(ΔV–16,800 FPS)				
SEPARATION WEIGHT	602,280	414,730	359,910	180,000
BOOST PROPELLANTS (ΔV – 14,635 FPS)		1,837,180		
(ΔV–13,800 FPS)				952,000
STAGE LIFT-OFF WEIGHT	602,280	2,251,910	359,910	1,132,000
TOTAL LIFT-OFF WEIGHT – POUNDS	2,854,190		1,491,910	

Figure 2

METHODOLOGY
(PERCENT)

GROUP	ORBITER			BOOSTER		
	DETAIL ANAL/ PART LIST	PARAMETRIC	VENDOR	DETAIL ANAL/ PART LIST	PARAMETRIC	VENDOR
BODY	70	30		10	90	
WING		100			100	
TAIL		100			100	
T.P.S.	100			100		
LANDING		100			100	
MAIN PROP		45	55		45	55
CRUISE SYS		15	85		10	90
R.C.S.		100			100	
AERO CONT.		100			100	
HYDRAULICS		100			100	
ELEC. POWER	80	20	(60)*	80	20	(60)*
G&N, COMM, ETC	80	20	(60)*	80	20	(60)*

* DETAIL LIST OF COMPONENTS WITH VENDOR DATA USED TO DEFINE 60% OF WEIGHT.

Figure 3

3. DETAIL WEIGHT ESTIMATES

Data in these paragraphs will explain how the individual group weights were generated.

3.1 Body Structure - Body structural weight is shown in Figure 4 for the 25,000 pound payload configuration.

The hydrogen tank, oxygen tank, tank webs, side panels, longerons, and frames were sized based upon orbiter loads and then weighed based upon required gages to meet those loads. Calculation for these weights then was based upon numerically integrating the result of the structural analysis on a pounds per inch versus body station plot. The weight computations are shown in Figure 5.

The two aluminum tanks act as a part of the primary bending moment elements in the vehicle. Bending moments do not set the major portion of the weight however. Internal tank pressurization determines the primary skin gage and the moment adds only to the longitudinal stiffening on the skin. For the oxygen tank the skin gage for pressure needs to be increased by only ten percent to account for an equivalent skin gage sized to withstand both the maximum bending moment and skin pressure. On the hydrogen tank the issue is more complicated due to the thrust loads which must be absorbed into the tank skin, hence the factor varies along the tank length. On an overall view however, the hydrogen tank is twenty percent oversized for the pressure only condition.

Side panel weights were based upon an analysis by the structures group and then a numerical integration plus non-optimum by the weight group. The side panels are of titanium so that they may form a portion of the outer mold line which is subject to temperatures of approximately 800°F. Since these panels are warm, thermal gradients have increased their weight by 625 pounds. Over the entire tank length

BODY STRUCTURAL WEIGHT

GROUP	ORBITER	BOOSTER
BODY BENDING	(17271)	(42500)
OXYGEN TANK	2747	11950
HYDROGEN TANK	4482	22450
TANK WEB	1170	-
SIDE PANELS	4464	-
LONGERON	441	-
FRAMES	2662	8100
UPPER SKIN	1305	-
BULKHEADS	(1120)	(8286)
FWD.	140	467
COMMON	840	6122
AFT	140	1697
WING PICK-UP	552	1780
NOSE GEAR ATT.	330	839
JET ENG. PROV.	1312	1670
NOSE SKIN & FRAME	2920	14700
COCKPIT	1369	504
MAIN GEAR ATT.	1313	2980
PAYLOAD DOOR	3380	-
HORZ. TAIL PICK-UP	115	179
VERT TAIL PICK-UP	126	207
THRUST STRUCTURE	4140	14800
BAFFLES	720	1150
ACOUSTIC W	150	300
PAYLOAD ATT.	400	-
BOOSTER ATT.	2500	2800
MANEUVER TANK	1462	-
TOTAL	39180	92695

Figure 4

TANK WEIGHT, ORBITER

STA.	LOCATION	$t_{EQUIV.}$ (IN.)	AREA (SQ. FT.)	WGT. (LBS)
365				
435	LOX	.0688	343	343
500	TANK	.0853	561	696
595	ρ = .101	.0990	224	323
710		.1177	572	979
715		.1265	85	156
800	H2	.0588	423	362
1100	TANK	.0676	1492	1467
1400	ρ = .101	.0613	1492	1327
1633		.0591	1068	918
TOTAL LOX TANK (LESS NON-OPTIMUM)		.0962	1785	2497
+ 10% NON-OPTIMUM				250
TOTAL LOX TANK				(2747)
TOTAL H_2 TANK (LESS NON-OPTIMUM)		.0626	4475	4074
+ 10% NON-OPTIMUM				408
				(4481)
TOTAL TANK				7228

Figure 5

the side panel has an equivalent thickness of 0.10 inches (for one side) and a total weight of 4464 pounds.

The longerons form the upper cap element in the bending structures. These titanium, channel shaped caps average 1.07 square inches (including non-optimum multiplier of ten percent). The frames which provide tank stiffness and support the thermal protection system are nominally .060 inch thick aluminum at 20 inch spacing giving a running weight of 2.09 pounds/inch (including a ten percent multiplier). These frames weigh 2662 pounds.

Forward and aft of the payload door is a structural skin which provides an outer mold line shape and helps stiffen the frames. This skin is titanium at an equivalent thickness of .043 inches which gives a weight of 1305 pounds.

Bulkheads were analyzed by two methods. The structures group analyzed the forward, common and aft bulkheads which resulted in weights of 140, 672, and 140

pounds respectively. A simple correlation was performed on existing bulkheads (Figure 6) and the derived weights, with 20 percent complication for the double-bubble shape, were 108, 840, and 117 pounds respectively. For each bulkhead, the heavier of the weights obtained from the two methods was used.

Thrust structure and booster attachment were analyzed from structural analysis of the load acting on the structure and the specific geometry. The thrust structure weight including a twenty eight percent multiplier (due to the high complexity of the area with thrust loads and tail loads interacting) was 4140 pounds. This is

BULKHEAD WEIGHT AGREEMENT

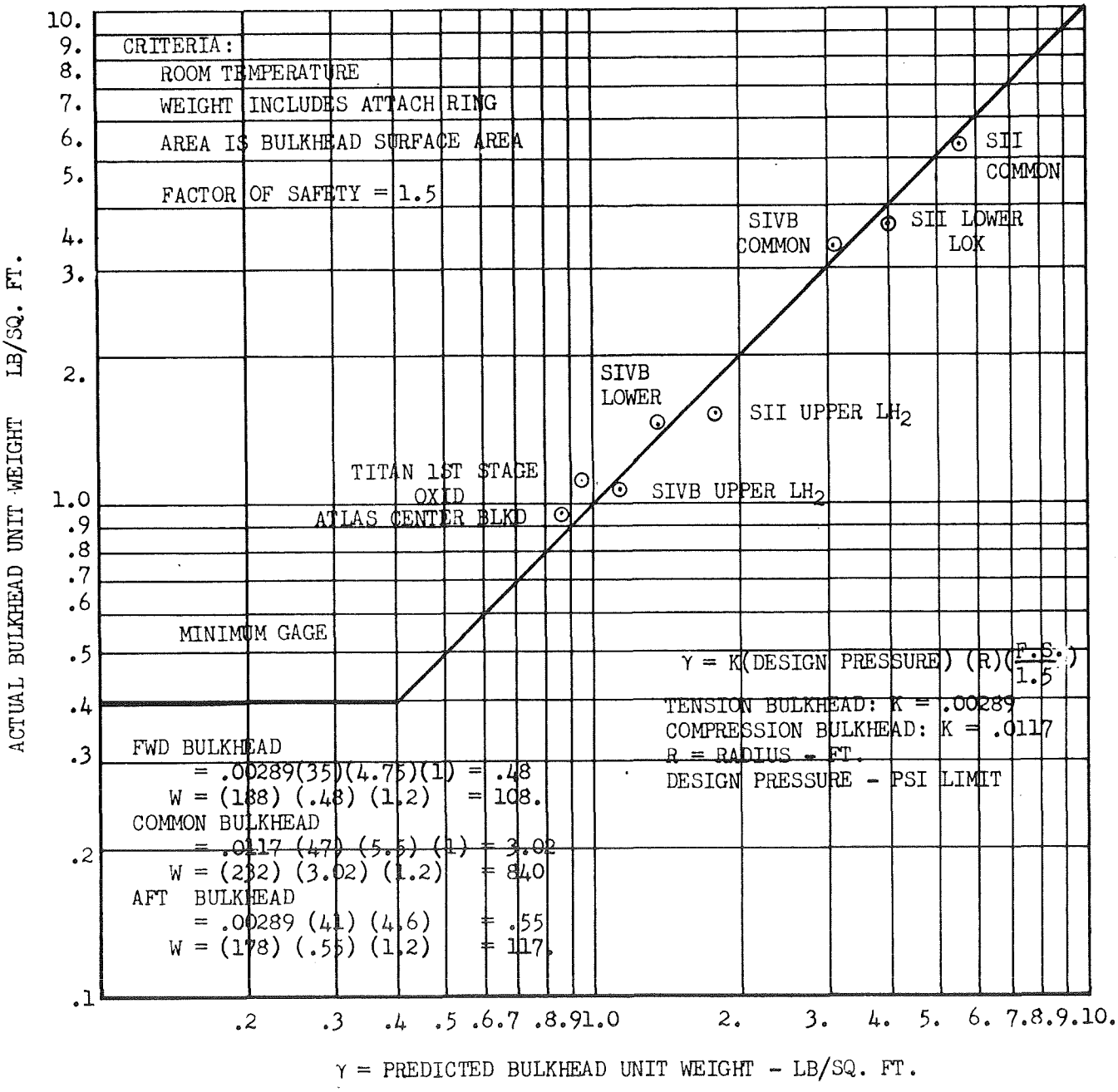

Figure 6

about .0046 times the vacuum thrust of the engines. The inter-connecting weight between the vehicles is composed of two bulkheads and a keel with associated mechanisms for insuring release of the vehicles. This is primarily an aluminum structure with a weight of 2500 pounds. The remaining items were done parametrically from statistical data on "conventional" aircraft. The equations and data used are shown in Figure 7.

Baffle weights, acoustic delta weight and payload doors represent weight bogies for items which were not analyzed but must be weighed. Baffles are equivalent to .12 inches over the tank area. The acoustic delta weight has been included to account for noise from the jet cruise engine. It is taken as 1.5 pounds per square foot over 100 square feet. The payload doors are titanium and have been weighed at 2.0 pounds per square foot. Maneuver tankage was allocated at five percent of the propellant weight.

The booster body weight analysis was similar to the orbiter analysis except that the bending structure was modeled by the structures group to obtain weight rather than computations of a number of sections. The modeling techniques used booster loads and pressures on the two tanks resulting in an oxygen tank weight of 11950 pounds and a hydrogen tank weight of 22450 pounds. Frame weight was 8100 pounds. Bulkheads weights were computed using the bulkhead estimation shown for the orbiter. Remaining items were analyzed using the statistical methods discussed above.

3.2 Wing - The breakdown of wing weight is shown in Figure 8 for the 25,000 pound payload vehicle. Leading edge weight is 15.0 pounds per linear foot of leading edge. This value was established from analysis of a carbon-carbon over honeycomb built up section.

Torque box structure weight was analyzed using the Morgan method. In this method material properties, wing geometry and loading are variables. Both the carry-thru and exposed wing are weighed based upon the loading conditions. Allowances have been made for joints, standard gages and non-optimum to yield a realistic weight for space shuttle wing torque box. Results are tabularized in Figure 9. The torque box weight shown is for 500 degree Fahrenheit 8-1-1 Titanium.

The wing has an aspect ratio of 7., planform taper ratio of .353, thickness over root chord length of .14, thickness over tip chord length of .10, and ultimate load factor of 3.75. The wing was weighed using a gross weight of 166,500 pounds for the design condition. Double slotted flap weight for the wing was derived from

STRUCTURAL WEIGHT INCREMENTS

GROUP (WEIGHT-LBS)	EQUATION	INPUT
WING PICK-UP (552)	$\frac{W}{W_G N_z} = \frac{.008\ b}{\cos \theta}$	W_G = 167640 LB N_z = 3.75 b = 108.8 FT. θ = 6.5°
NOSE GEAR ATT. (330)	$\frac{W_D}{S} = .33\ q^{.3}$ $\frac{W_S}{F_N} 10^3 = \frac{.039\ L^{.9}}{(F_N/1000)^{.1}}$	q = 750 psf S = 40 FT^2 L = 118 IN. F_N = 123500 LB
JET ENG. PROV. (1312)	$\frac{W_{AIP}}{L*N} = .135\ (PERM)^{1.3}\ P_d^{.6}$ $\frac{W_T * 10^3}{T * N} = \frac{3.85}{(T/1000)^{.4}}$ $\frac{W_C}{L*D} = \frac{3.24\ N^{.9}}{(L*D)^{.1}}$	PERM = 10.5 FT P_d = 10.4 psi L = 15.8 FT N = 4 T = 14500 LB N = 4 L = 15.8 FT D = 3.67 FT
COCKPIT (1369)	$\frac{W_C}{V_C} = \frac{1.54\ (1. + P_C)^{.35}}{V_C^{.22}}$ $\frac{W_W}{S} = \frac{15.5\ (1. + P_C)^{.20}}{S^{.365}}$	P_C = 29.2 psi V_C = 1162 FT^3 S = 8. FT^2 P_C = 29.2 psi
MAIN GEAR ATT. (1313)	$\frac{W_D}{S} = .43\ q^{.3}$ $\frac{W_S\ 10^3}{F_M} = \frac{.071\ L^{.9}}{(F_M/1000)^{.4}}$	q = 750 psf S = 104 FT^2 L = 120 IN. F_M = 330000 LB

Figure 7

STRUCTURAL WEIGHT INCREMENTS
(Continued)

GROUP (WEIGHT-LBS)	EQUATION	INPUT
HORIZ TAIL ATT. (115)	$\frac{W_{T.P.}\ 10^3}{F_T} = \frac{6.9}{(F_T/1000)^{.4}}$	F_T = 114000 LB
VERT TAIL ATT. (126)	SAME AS ABOVE	F_T = 133000 LB

Figure 7 (Con't)

WING WEIGHT BREAKDOWN

(25,000 LB PAYLOAD)

WING	ORBITER	BOOSTER
Leading Edge	1,400	1,950
Torque Box	11,010	30,890
Control Surfaces		
Trailing Edge Flaps	1,378	2,704
Trailing Edge Flap Tracks	606	1,190
Ailerons	307	676
Total	14,700	37,410
$\overline{W}$ (lbs/ft^2)	7.95	10.1

Figure 8

an empirical correlation of DC-8, DC-10, DC-9, CL-28 and Caribou aircraft. Unit weight for a flap is given by $.76\ (S * K)^{.25}$ where S is the flap area in square feet and K is the equivalent airspeed in knots at the time flap deflection begins. The curve is correlated to aluminum flaps and an allowance of ten percent has been included to convert to titanium. Flap area is 284.8 square feet over the inboard 65% of the wing span. Flap track weight was estimated as forty-four percent of the flap weight. Ailerons have been weighed on the basis of four pounds per square foot. The ailerons cover the outboard 30% of exposed wing span and have an area of 76.8 square feet.

TORQUE BOX STRUCTURE WEIGHT
ORBITER

ELEMENT	EXPOSED WING	CARRY-THRU
Bending		
Shell	1561	576
Bending	2409	1535
Shear		
Shell	285	176
Shear	567	
Ribs	469	276
Joints	529	256
Std. Gage	104	38
Non-Opt.	1474	755
Subtotal	7398	3612
Total	11,010	

Figure 9

The booster wing was analyzed in the same manner as the orbiter wing. Non-dimensional geometry was held the same for the booster wing and the design weight raised to 367,000 pounds. The torque box weight distribution is shown in Figure 10.

A weight trade analysis between an aluminum and titanium wing was conducted. The wing structure, thermal protection and total wing weights are shown in Figure 11 plotted against bondline temperature of the metal wing. Parameters selected in the plot nearly simulate those for the orbiter design condition.

3.3 Tail - Tail structure is subdivided into horizontal and vertical tail, and their weight summary is shown in Figure 12.

The leading edge weight and torque box weight (Figure 13) were determined by the wing methodology discussed above. Elevator/rudders and their attachment weight (Figure 14) have been defined using "conventional" aircraft statistical methods based upon area, chord thicknesses, hinge moments, and spans. These equations are

Basic Shell $W_{BS} = 1.75$ (area)

Drive Rib $W_{DR} = .46\ (H.M./t_n)^{.75}\ C_m\ N$

H.M. - hinges moment - in-#/1000

t_m - mean thickness - inches

C_m - mean chord - feet

N - number of surfaces

Hinge $W_H = .40\ (H.M.)^{.2}\ b\ N$

b - span - feet

Support $W = .25\ (W_{BS} + W_{DR} + W_H)$

TORQUE BOX WEIGHT DISTRIBUTION
BOOSTER

ELEMENT	EXPOSED	CARRY-THRU
Bending		
Shell	3,165.	1,109.
Bending	7,815.	4,718.
Shear		
Shell	813.	477.
Bending	1,818.	
Ribs	1,339.	750.
Joints	1,495.	705.
Std. Gage	211.	74.
Non-Optimum	4,269.	2,133.
Subtotal	20,925.	9,966.
Total	30,890.	

Figure 10

WING WEIGHT VARIATION WITH TEMPERATURE

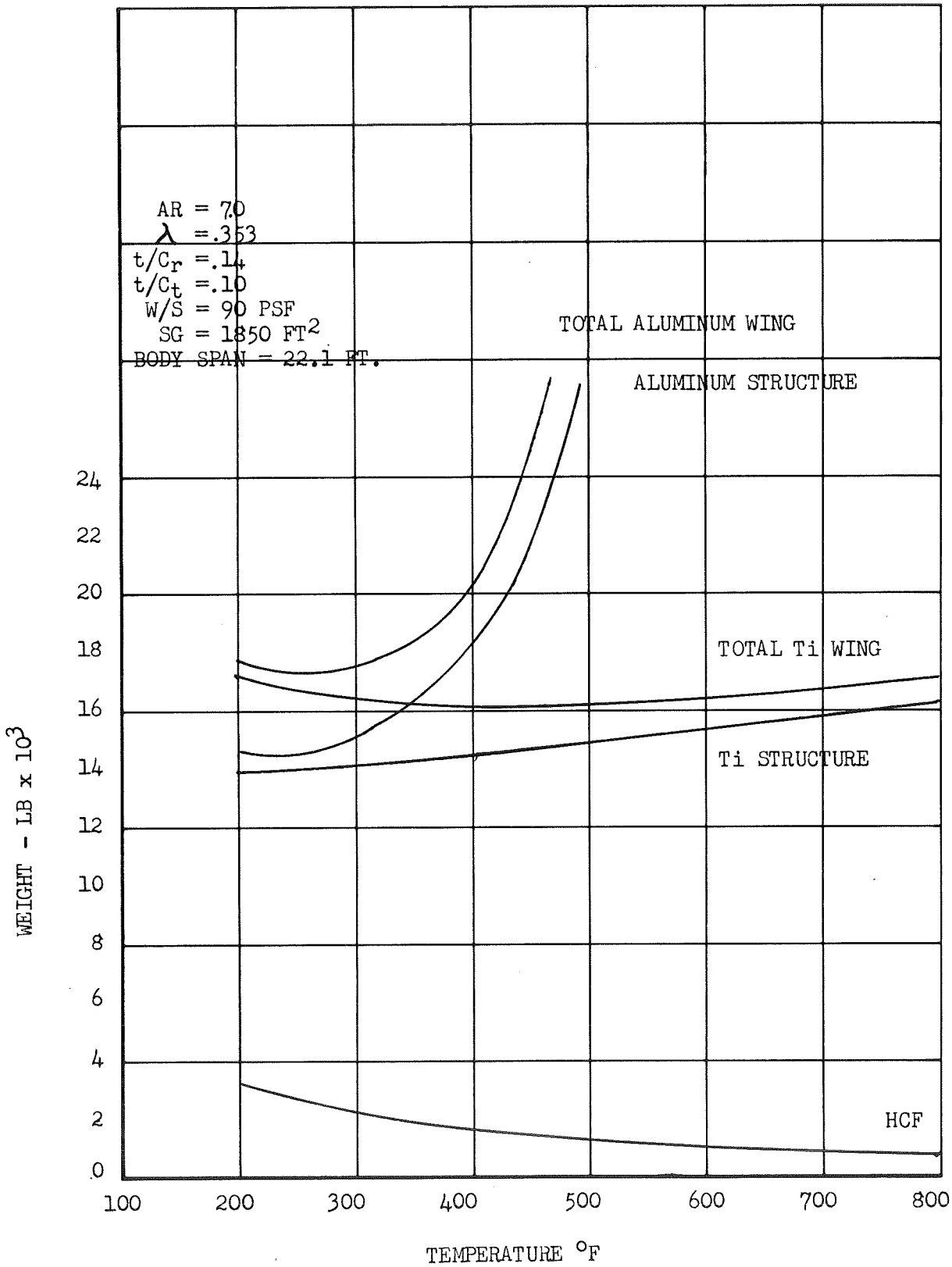

Figure 11

TAIL STRUCTURE WEIGHT SUMMARY

TAIL	ORBITER	BOOSTER
Horizontal Tail		
Leading Edge	940	1,100
Torque Box	2,030	6,230
Elevon	1,298	3,280
Elevon Pick-up	324	820
Total	4,592	11,400
$\overline{W}$ (lb/ft^2)	5.1	5.3
Vertical Tail		
Leading Edge	450	731
Torque Box	1,311	3,646
Rudder	304	692
Rudder Back-up	76	173
Total	2,141	5,240
$\overline{W}$ (lb/ft^2)	4.7	5.0
Tail Total	6,733	16,640

Figure 12

3.4 Thermal Protection System - The thermal protection system weights are shown for the orbiter and booster in Figures 15 and 16 respectively.

Thermal protection on the mold line occurs in two forms - (1) hardened compacted fiber (HCF) supported by either a titanium structural skin or a honeycomb panel, or (2) titanium shingle. The HCF over structural skin (the skin is not coded to the thermal protection system) occurs in the nose area and in an area over the orbiter wing. The HCF is also attached directly to the aerodynamic surfaces

TORQUE BOX WEIGHT

GROUP	ORBITER			BOOSTER		
	H. TAIL		V. TAIL	H. TAIL		V. TAIL
	EXPOSED	CARRY-THRU	EXPOSED	EXPOSED	CARRY-THRU	RXPOSED
Bending						
Shell	344	396	525	734	1107	1209
Bending	134	108	141	418	425	448
Shear						
Shell	97	63	76	335	272	271
Shear	44		61	141		204
Ribs	177	118	146	594	507	516
Joints	79	69	95	222	231	265
Std. Gage	22	26	35	49	74	81
Non-Opt	193	169	232	549	574	652
Subtotal	1081	949	1311	3040	3190	3646
Total	2030		1311	6230		3646

Figure 13

ELEVON/RUDDER WEIGHT

GROUP	ORBITER		BOOSTER	
	H. TAIL	V. TAIL	H. TAIL	V. TAIL
Basic Shell	884	238	2056	550
Drive Rib	259	33	923	82
Hinge	155	33	301	60
Support	324	76	820	173

Figure 14

THERMAL PROTECTION SYSTEM WEIGHTS
(ORBITER)

GROUP	WEIGHT	UNIT WEIGHT
Body T.P.S.	(13757)	
Nose Cap	131	1.9 #/□'
Bottom X/L = .028 to .27	1180	1.75 #/□'
Bottom X/L = .27 to .48	1860	2.57 #/□'
Bottom X/L = .48 to .75	1967	2.23 #/□'
Bottom X/L = .75 to 1.0	1466	2.05 #/□'
Top & Sides X/L = .028 to .27	1438	0.81 #/□'
Lwr Side X/L = .27 to 1.0	2400	1.59 #/□'
Side Wing Imp. over Struct.	160	.99 #/□'
Side Wing Imp. over Panels	513	1.72 #/□'
Side T_i Shingles	1460	1.20 #/□'
Top	1182	.30 #/□'
Base Heat	339	1.84 #/□'
Hydrogen Tank Insul.	1822	.395 #/□'
Wing	1600	1.4 #/□'
Horz. Tail	925	1.4 #/□'
Total	18,443	

Figure 15

THERMAL PROTECTION SYSTEM WEIGHTS
(BOOSTER)

GROUP	WEIGHT	UNIT WEIGHT
Body TPS	(21685)	
0-400"	1384	.64 #/□' & .71 #/□'
400-1260	6061	.64 #/□', 1.21 #/□', 1.32 #/□'
1260-1920	7783	1.21 #/□' & 1.32 #/□'
1920-2240	3521	1.21 #/□' & 1.32 #/□'
2240-2530	2936	1.21 #/□' & 1.32 #/□'
Wing	948	.41 #/□'
Horz Tail	588	.43 #/□'
Vert. Tail	289	.46 #/□'
Hydrogen Tank	4260	.395 #/□'
Base Heat	2360	1.84 #/□'

Figure 16

load carrying structural skin. The HCF on honeycomb panels (here the panel and associated support structure back to the tank is included in TPS weight) occurs along the bottom and the lower seven foot of the sides. There is also an interference heating area above the orbiter wing where HCF is attached to a panel. The titanium shingles are used above the seven foot zone on the sides to a height where the bending structure forms the outer mold line on the orbiter. Since the booster bending structure is all internal, titanium shingles cover nearly all of the area aft of station 790 and above the lower side "hot" zone.

Unit weights were derived from an analysis by thermodynamics of the insulation - HCF and/or micro quartz - and by structures of the panel and panel support. A summary of these unit weights for the orbiter is shown in Figure 17. Booster T.P.S. unit weights were derived in a similar manner.

3.5 Main Propulsion System - Main propulsion system inerts and propellant are shown in Figure 18 for orbiter and booster.

Engine weight was established from vendor data for the parameters of sea level thrust and expansion ratio. Common engines have been used in both orbiter and booster producing 400,000 pounds of sea level thrust. The expansion ratio on the first stage is 42.5:1 giving an engine weight of 4010 pounds per engine while the second stage expansion ratio is 100:1 (retractable) giving an engine weight of 4446 pounds per engine. Gimbal weight for the engine is 15 percent of the engine weight. The feed system for the engines is a large weight item and has an unfavorable center of gravity location. Line size is 10 inches on the fuel line and 10.6 inches on the oxidizer lines resulting in unit line weights of 14.9 pounds per foot and 15.8 pounds per foot, respectively. These unit weights result in 3069 pounds of oxidizer lines and 821 pounds of fuel lines. This allows for routing from the tank to the engines plus ten diameters of length to account for local routing at the engine. Pressurization, fill and vent, and purge systems were ratioed from Saturn data.

3.6 Landing System - The landing system weight was derived using aircraft statistical data and then a comparison was made using the same methods on DC-8 and DC-9 aircraft. The resulting weight information is shown in Figure 19.

Figure 20 lists associated design data that was used in defining the gear weight. In addition to the gear, a drag chute has been added to both orbiter and booster at 282 pounds and 450 pounds, respectively.

UNIT WEIGHTS

LOCATION	HCF	INSUL.	ADH.	PANEL/ SHINGLE	TOTAL (LB/FT^2)
Bottom .028-.27	1.18	.52	.05	-	1.75
Bottom .27-.48	.99	.45	.05	1.08	2.57
Bottom .48-.75	.91	.42	.05	.85	2.23
Bottom .75-1.0	.87	.40	.05	.73	2.05
Top & Side .028-.27	.46	.30	.05	-	0.81
Lwr Side .27-1.0	.50	.31	.05	.73	1.59
Side over Str.	.60	.34	.05	-	0.99
Side over Pnl	.60	.34	.05	.73	1.72
Upper Side .27-1.0	-	.30	-	.90	1.20
Top .27-1.0	-	.30	-	-	0.30

Figure 17

MAIN PROPULSION SYSTEM
INERTS AND PROPELLANT

MAIN PROPULSION	ORBITER	BOOSTER
Engines (2 orb, 10 boost)	8,892	40,100
Gimbals	1,334	6,015
Valving	256	1,280
Lines	3,890	23,325
Pressurization (Dry)	560	2,040
Fill & Vent	1,305	2,299
Purge	370	785
Total (Inert)	16,607	75,844
Useable Propellant	400,000	1,837,180
In-Flight Loss	5,410	12,720
Hold Down Propellant		27,220
Total Propellant	405,410	1,877,120
Total System	422,017	1,953,004

Figure 18

WEIGHT COMPARISON

GROUP	DC-8-63 & Booster				DC-9-30 & Orbiter			
	Main Gear DC-8 63	Main Gear Boost	Nose Gear DC-8	Nose Gear Boost	Main Gear DC-9 30	Main Gear Orb	Nose Gear DC-9	Nose Gear Orb
Struts & Beams	3934	3946	383	570	956	1992	197	218
Attach Struct	1669	2350	83	66	573	876	38	23
Rolling Assy								
Wheels	960	840	97	113	360	520	48	163
Tires	1536	1120	156	150	520	640	55	76
Brakes	2064	1620			708	800		
Air	92	80	6	10	12	40	2	5
Systems	539	1205	197	230	431	625	122	140
Sub Total	10,774	11,161	922	1139	3560	5493	462	625
Total - Gear	11,716	12,300			4022	6118		
Gross Wts	355,000	333,180			108,000	164,520		
Gear Wt/Gross Wt	3.3%	3.7%			3.72%	3.72%		

Figure 19

DESIGN DATA

Landing Gear Geometry	Booster		Orbiter	
	Main Gear	Nose Gear	Main Gear	Nose Gear
Max Landing Weight/1000 lbs	333.18	----	164.52	----
Distance Between Mlg & Nlg (in.)		----		----
Distance Between Strut CL to CL in		----		----
Distance from Trunnion CL to Brace Attac in Fus. (in.)				
Bogie Beam Distance-Wheel CL to CL (in.)	55.0	----	----	----
Axle Spread-Wheel CL to CL (in.)	25.0	25.0		
Strut (extended) Length-Axle to Trunn. (in.)				
Piston Stroke (in.)	16.0	16.0	16.0	16.0
No. of Struts per Plane	2	1	2	1
No. of Axles per strut	2	1	1	1
No. of Wheels per strut	4	2	2	2
Tire Data				
Size-Dia. x width (in.)	44 x 13	36 x 11	40 x 17.5	26 x 8
Ply Rating	26	22		
Wheel Diameter (in.)	20.0	16.0	18.0	14.0
Pressure (PSI)				
Touchdown Speed, V_{TD} (kn)	142		142	
Max Vertical Load/1000 lb per strut	420.0	93.0	207.0	46.0

Figure 20

3.7 Air Breathing Engines and System - The cruise system weights are given in Figure 21 for orbiter and booster.

The fan engines have been selected from manufactures specification to meet the required performance. Four JT8D-9 engines are used in the orbiter and will meet the climb-out requirement or the engine out criteria. The engines are currently in use on commercial aircraft providing 14,500 pounds of sea level thrust per engine. The booster has six JT3D-7 engines producing 17,000 pounds of sea level thrust.

The fuel tank and feed system have been analyzed using aircraft statistical data. Orbiter fuel is stored in the wing torque box center section and a tank is not required. The booster tank is forward near the engines. The distribution for these systems is shown in Figure 22.

Engine accessories include lube and controls. These values were estimated for the orbiter but were not estimated for the booster as the engine weight includes these items. Usable fuel for these systems is based upon five minutes of maximum power for the orbiter (approximately fifteen minutes of real flight time) and four hundred eightly miles of cruise range for the booster.

3.8 Systems - The remaining systems while required for completeness of the vehicle do not drive the design of the vehicle. Therefore, little space will be devoted to the system and only a weight tabulation will be included and shown in Figure 23.

CRUISE PROPULSION

GROUP	ORBITER	BOOSTER
ENGINES	12,800.	26,760.
FUEL TANK & FEED	850.	3,750.
ENGINE ACCESSORIES	1,050.	-
TOTAL INERT	14,700.	30,510.
USEABLE FUEL	3,070.	80,000.
RESERVE FUEL	600.	1,200.
TOTAL SYSTEM	18,370.	111,710.

Figure 21

FUEL TANK AND FEED

GROUP	ORBITER	BOOSTER
TANK/FLEX BAG	135	3090
LINES	270	50
VALVES	28	43
REFUEL, AIR	100	100
REFUEL, GROUND	44	44
PRESSURIZATION	200	400
QUANTITY IND. SYS.	23	23
SEALANT	50	0
TOTAL	850	3750

Figure 22

SYSTEM WEIGHTS

GROUP	ORBITER	BOOSTER
RCS		
Thruster & Instal.	1260	1720
Lines, Valves, Mtg.	830	1120
Tankage, Press.	410	660
Total Inert	2500	3500
Useable Propellant	5650	4500
Total System	8150	8000
AERODYNAMIC CONTROLS	(2700)	(4650)
Cockpit Control	200	200
Autopilot	200	200
Flap Control	1100	2040
Aileron Control	412	760
Elevator Control	547	1012
Rudder Control	241	438
HYDRAULICS	(1595)	(2930)
Power System I	535	980
Power System II	530	975
Power System III	530	975
ELECTRICAL POWER SYSTEM	(3280)	(3000)
Generation	1860	1700
Dist. & Cont.	700	640
	(2560)	(2340)
Mounting	72	68
Circuitry	648	592
AUTOMATIC CONTROLS, G&N, INSTRUMENTATION & COMMUNICATIONS		
G&N	(1470)	(800)
Intetial Sensors	120	120
Nav. Computer	120	120
Central Computer	180	180
Rate Gyro Pack	15	15
Air Data Sensor & Proc.	40	40
Rend Radar	300	
Docking Sensor	60	
Optical Sensor & Proc.	60	
I/R Sensor & Proc.	60	
Auto Land Decoder	30	30
Radar Altimeter	60	60
Vortac Decoder	40	40
	(1085)	(605)
Mounting	45	36
Circuitry	340	159

Figure 23

SYSTEM WEIGHTS (CONTINUED)

GROUP	ORBITER	BOOSTER
TELE. COMMUNICATION	(430)	(260)
UHF XCUR	40	40
SHF XCUR	60	
Comm. Processor	45	45
SHF Ant. Cont. Amp	10	
UHF Ant. Sw.	5	5
Headsets	10	10
Intercom	40	40
UHF Antenna	5	5
SHF Antenna	60	
Recovery Beacon	6	6
Data Coding	50	50
	(331)	(201)
Mounting	26	21
Circuitry	73	38
INSTRUMENTATION & CHECKOUT	(390)	(390)
Checkout	175	175
Multiplexer	50	50
Computer	75	75
	(300)	(300)
Mounting	26	26
Circuitry	64	64
DISPLAYS & CONTROLS	(725)	(725)
Control Panel	100	100
Display Panel	80	80
Seq. Controller	20	20
Hand Controller	15	15
Headup Display	90	90
Multi-sensor Display	92	92
Flight Recorder	80	80
Printer	40	40
TV Cameras	40	40
	(557)	(557)
Mounting	25	25
Circuitry	143	143
ECS	(1590)	(430)
Gas Management	52	28
Heat Transport	1025	226
Water Supply System	11	
Hydraulic System Cooling	62	126
Mounting, Plumbing, Circuitry	90	25
Total Inert	1240	405
Gas Supply	350	25

Figure 23 (Con't)

SYSTEM WEIGHTS (CONTINUED)

GROUP	ORBITER	BOOSTER
CREW AND EQUIPMENT	(600)	(0)
Men (2)	400	
Suits	50	
Seats and Installation	80	
Lighting, Charts, Misc.	70	

Figure 23 (Con't)

4. MASS PROPERTIES SEQUENCING

This section presents the vehicle weight, center of gravity, and inertia variation throughout a nominal mission. Center of gravity requirements for the aircraft cruise portion of the mission create the greatest problems from a mass properties viewpoint. The effects of the various systems on center of gravity location can be seen in Figure 24 for the orbiter and Figure 25 for the booster. The thrust structure, tail, engine and feed system tend to be the items which contribute to the aft c.g.; while nose structure, equipment and cruise system pull the c.g. forward. Center of gravity envelope is shown for the launch configuration to separation in Figure 26. Reference axis is the booster tank centerline with increasing X toward the tail and Z upward. Y out the right wing completes a right hand coordinate system. Figure 27 defines the booster center of gravity travel from separation to landing. Figure 28 presents similar data for the orbiter.

Sequenced mass properties are shown for the launch configuration in Figure 29; for the booster from separation in Figure 30; and for the orbiter from launch in Figure 31. The weight W is in pounds; center of gravity X, Y, and Z in inches; radius of gyration KX, KY, and KZ in inches; moment of inertia IXX, IYY, IZZ in slug-ft^2; and product of inertia PXY, PYZ, and PZX in slug-ft^2. Booster reference axis was used for the launch configuration mass properties.

CENTER OF GRAVITY (BOOSTER)

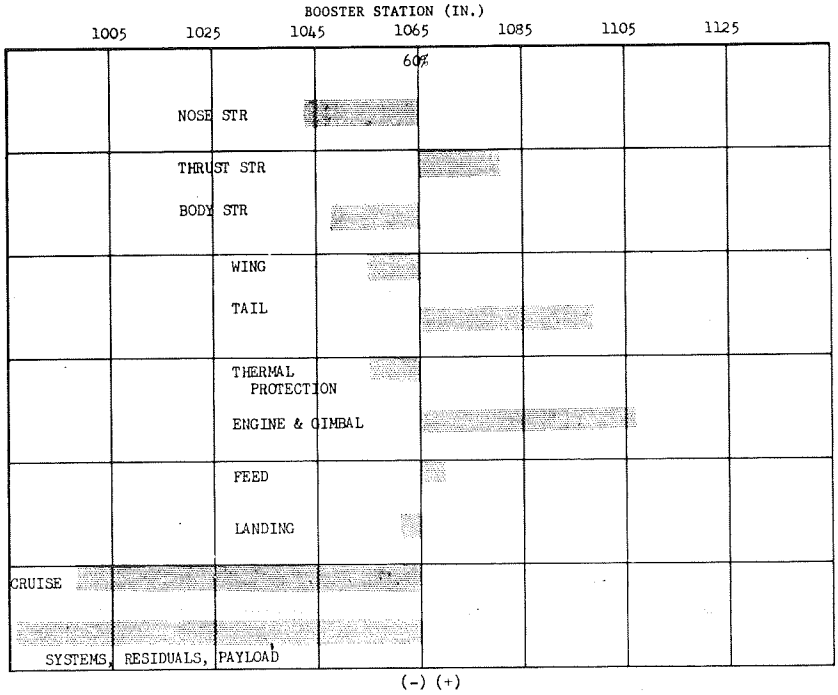

Figure 24

CENTER OF GRAVITY (ORBITER)

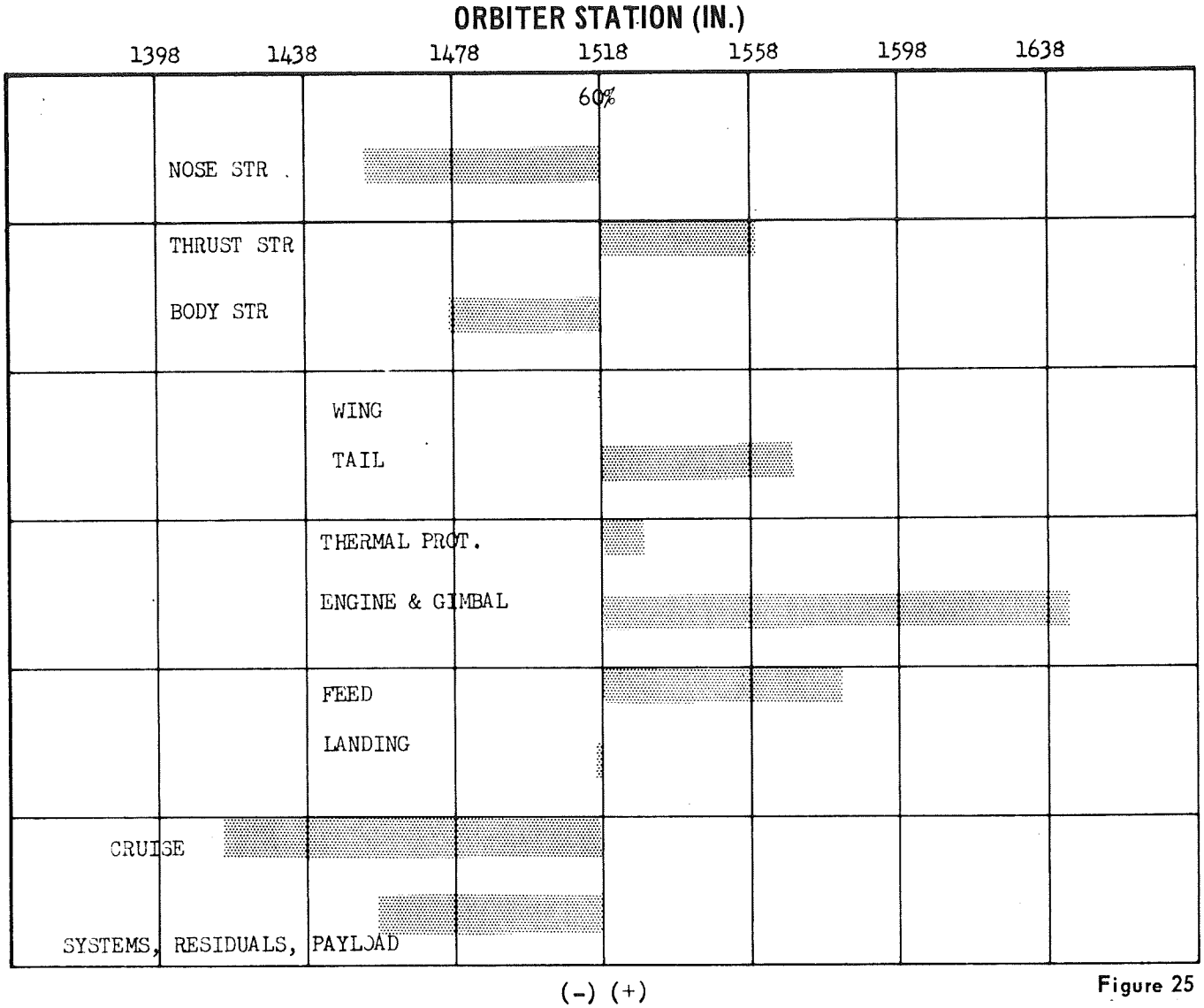

Figure 25

LAUNCH TO SEPARATION TO C.G. TRAVEL

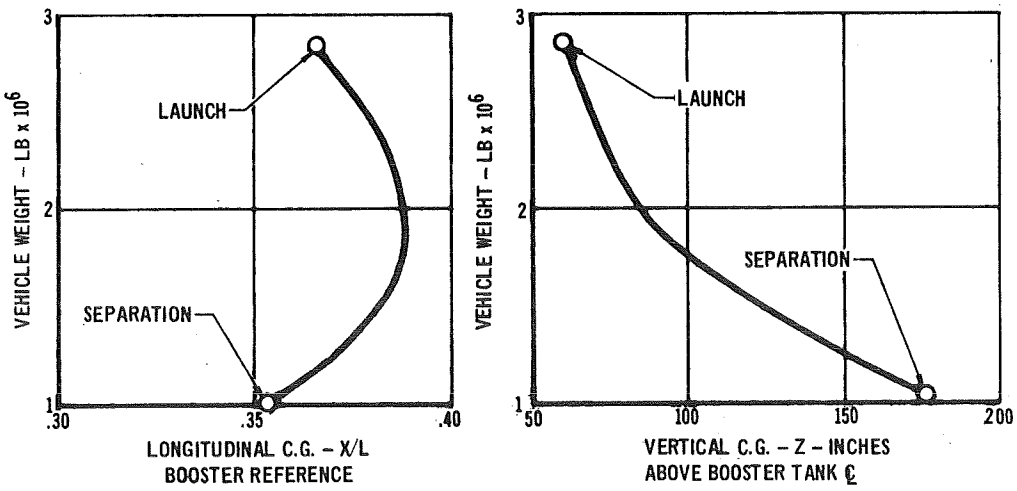

Figure 26

C.G. ENVELOPE – SEPARATION TO LANDING
(Booster)

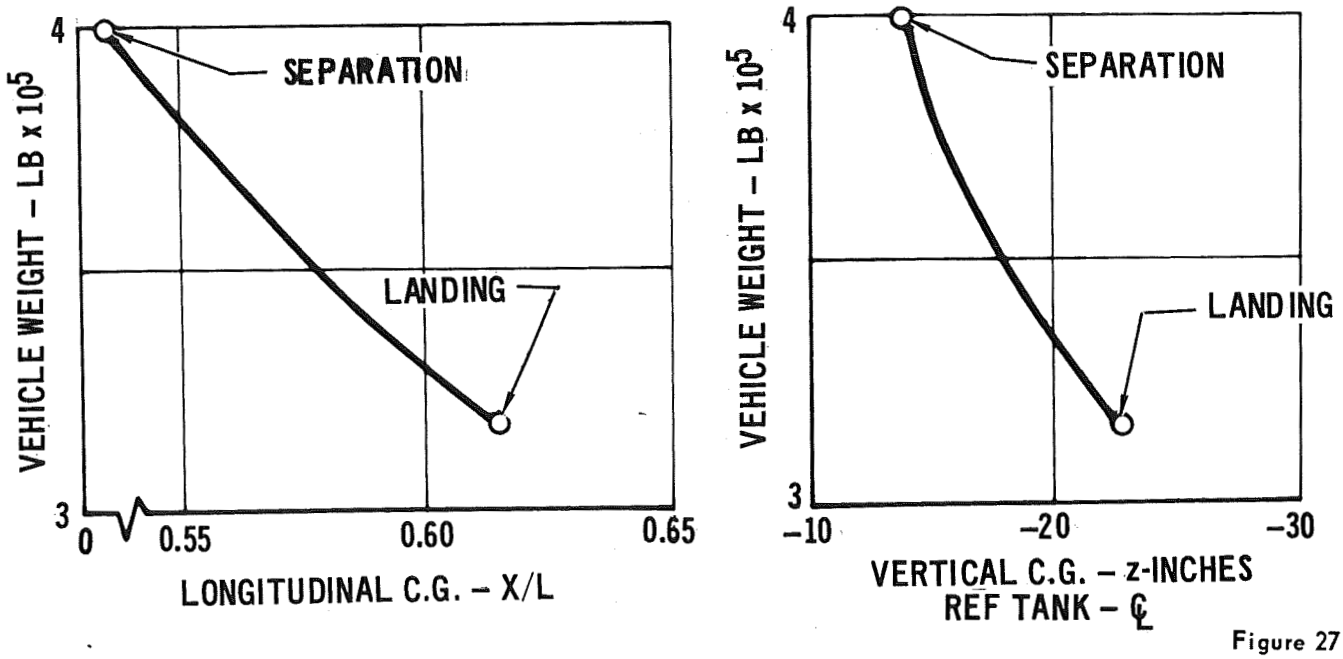

Figure 27

C.G. ENVELOPE – SEPARATION TO LANDING
(Orbiter)

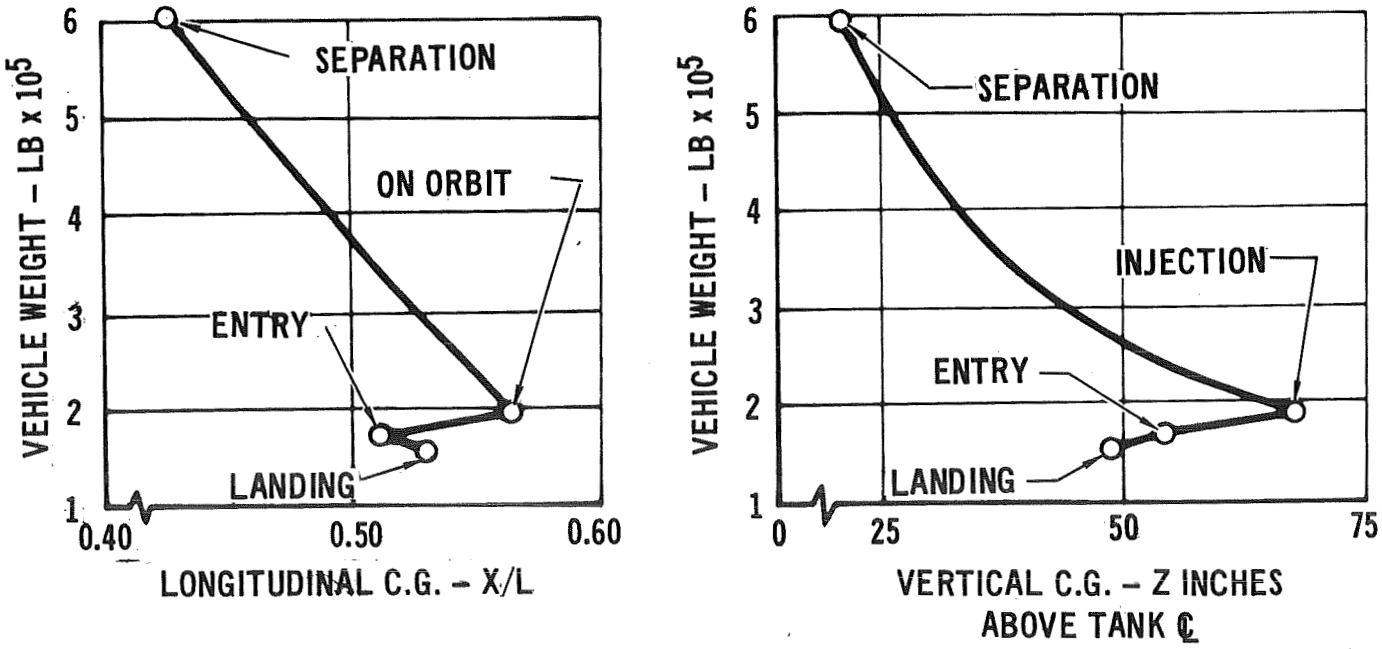

Figure 28

LAUNCH CONFIGURATION

LIFTOFF						
W= 2854117.0	X=	923.84	Y=	.00	Z=	62.14
	KX=	160.23	KY=	518.32	KZ=	506.64
	IXX=	15815165.	IYY=	165501936.	IZZ=	158123968.
	PXY=	-0.	PYZ=	-0.	PZX=	-15419930.
1/4 BURN						
W= 2391617.0	X=	963.13	Y=	.00	Z=	74.15
	KX=	172.23	KY=	549.98	KZ=	537.66
	IXX=	15311973.	IYY=	156144304.	IZZ=	149226464.
	PXY=	-0.	PYZ=	-0.	PZX=	-16924128.
1/2 BURN						
W= 1929117.0	X=	982.04	Y=	.00	Z=	91.93
	KX=	187.13	KY=	595.05	KZ=	582.33
	IXX=	14581035.	IYY=	147436688.	IZZ=	141199392.
	PXY=	-0.	PYZ=	-0.	PZX=	-17648416.
3/4 BURN						
W= 1466617.0	X=	966.76	Y=	.00	Z=	120.93
	KX=	205.81	KY=	648.30	KZ=	635.69
	IXX=	13408758.	IYY=	133046032.	IZZ=	127918640.
	PXY=	-0.	PYZ=	-0.	PZX=	-17063504.
BURNOUT						
W= 1004117.0	X=	873.89	Y=	.00	Z=	176.63
	KX=	227.47	KY=	698.02	KZ=	688.05
	IXX=	11214070.	IYY=	105597792.	IZZ=	102602720.
	PXY=	-0.	PYZ=	-0.	PZX=	-13508913.

Figure 29

BOOSTER

LIFT OFF						
W= 2251747.0	X=	1016.18	Y=	.00	Z=	-2.16
	KX=	101.10	KY=	490.17	KZ=	494.44
	IXX=	4967940.	IYY=	116774400.	IZZ=	118816528.
	PXY=	-0.	PYZ=	-0.	PZX=	-1747383.
1/4 BURN						
W= 1789247.0	X=	1092.56	Y=	.00	Z=	-2.72
	KX=	112.92	KY=	513.48	KZ=	518.60
	IXX=	4924191.	IYY=	101823600.	IZZ=	103866416.
	PXY=	-0.	PYZ=	-0.	PZX=	-1667464.
1/2 BURN						
W= 1326747.0	X=	1165.18	Y=	.00	Z=	-3.67
	KX=	130.45	KY=	556.62	KZ=	562.99
	IXX=	4872846.	IYY=	88723680.	IZZ=	90767168.
	PXY=	-0.	PYZ=	-0.	PZX=	-1591552.
3/4 BURN						
W= 864247.0	X=	1237.24	Y=	.00	Z=	-5.63
	KX=	160.55	KY=	625.44	KZ=	634.15
	IXX=	4808374.	IYY=	72970784.	IZZ=	75016304.
	PXY=	-0.	PYZ=	-0.	PZX=	-1516275.
BURNOUT						
W= 401747.0	X=	1316.52	Y=	.00	Z=	-12.10
	KX=	233.78	KY=	778.52	KZ=	793.58
	IXX=	4739166.	IYY=	52556448.	IZZ=	54608960.
	PXY=	-0.	PYZ=	-0.	PZX=	-1433471.
MAX CRUISE						
W= 397197.0	X=	1326.78	Y=	.00	Z=	-12.23
	KX=	234.87	KY=	776.98	KZ=	792.19
	IXX=	4729272.	IYY=	51755488.	IZZ=	53801968.
	PXY=	-0.	PYZ=	-0.	PZX=	-1423579.

Figure 30

BOOSTER (Continued)

LANDING						
W=	317147.0	X=	1562.13	Y=	.00	Z= -21.16
		KX=	266.20	KY=	696.74	KZ= 716.58
		IXX=	4850922.	IYY=	33230480.	IZZ= 35149696.
		PXY=	-0.	PYZ=	-0.	PZX= -1043400.

DRY						
W=	311747.0	X=	1576.60	Y=	.00	Z= -22.02
		KX=	268.31	KY=	691.98	KZ= 712.34
		IXX=	4844011.	IYY=	32219552.	IZZ= 34143568.
		PXY=	-0.	PYZ=	-0.	PZX= -980903.

Figure 30 (Con't)

ORBITER

ORBITER MSC-250-1	UNITS - INCH				PAGE 2
SEPARATION					
W= 602278.0	X=	763.73	Y=	.00	Z= 22.50
	KX=	101.45	KY=	387.79	KZ= 27104.25
	IXX=	1338014.	IYY=	19548864.	IZZ=5500238848.
	PXY=	31.	PYZ=	-2.	PZX= 1146594.
1/4 BURN					
W= 500876.0	X=	821.77	Y=	.00	Z= 27.05
	KX=	110.33	KY=	395.67	KZ= 29721.07
	IXX=	1315901.	IYY=	16924784.	IZZ=5497486336.
	PXY=	30.	PYZ=	-2.	PZX= 977172.
1/2 BURN					
W= 399474.0	X=	879.92	Y=	.00	Z= 33.91
	KX=	122.18	KY=	412.13	KZ= 33279.75
	IXX=	1287049.	IYY=	14645121.	IZZ=5495192576.
	PXY=	28.	PYZ=	-3.	PZX= 807563.
3/4 BURN					
W= 298071.0	X=	942.64	Y=	.00	Z= 45.43
	KX=	139.09	KY=	436.41	KZ= 38526.44
	IXX=	1244578.	IYY=	12252767.	IZZ=5492767744.
	PXY=	26.	PYZ=	-3.	PZX= 624685.
INJECTION					
W= 196668.0	X=	1010.11	Y=	.00	Z= 68.82
	KX=	165.84	KY=	479.34	KZ= 47429.25
	IXX=	1167425.	IYY=	9753531.	IZZ=5490277376.
	PXY=	24.	PYZ=	-4.	PZX= 428067.
DOCKING					
W= 186386.0	X=	984.44	Y=	.00	Z= 63.84
	KX=	168.86	KY=	473.39	KZ= 48719.74
	IXX=	1147078.	IYY=	9015457.	IZZ=5489622016.
	PXY=	25.	PYZ=	-3.	PZX= 316139.

Figure 31

ORBITER (Continued)

RETROGRADE						
W=	176824.0	X=	953.63	Y=	.00	Z= 58.40
		KX=	171.66	KY=	465.19	KZ= 50019.50
		IXX=	1124660.	IYY=	8259192.	IZZ=5488835584.
		PXY=	26.	PYZ=	-3.	PZX= 190124.
RE-ENTRY						
W=	167287.0	X=	919.22	Y=	.00	Z= 52.34
		KX=	174.52	KY=	453.35	KZ= 51425.32
		IXX=	1099733.	IYY=	7420913.	IZZ=5488049152.
		PXY=	27.	PYZ=	-3.	PZX= 49756.
MAX CRUISE						
W=	161957.0	X=	935.18	Y=	.00	Z= 51.11
		KX=	177.23	KY=	451.91	KZ= 52264.59
		IXX=	1098006.	IYY=	7138968.	IZZ=5487787008.
		PXY=	26.	PYZ=	-3.	PZX= 71456.
LANDING						
W=	158837.0	X=	947.53	Y=	.00	Z= 48.13
		KX=	180.72	KY=	449.36	KZ= 52775.34
		IXX=	1119701.	IYY=	6922602.	IZZ=5487524864.
		PXY=	26.	PYZ=	-3.	PZX= 84839.
DRY						
W=	131097.0	X=	960.79	Y=	.00	Z= 27.48
		KX=	189.88	KY=	477.46	KZ= 58091.11
		IXX=	1020223.	IYY=	6450672.	IZZ=5487131648.
		PXY=	25.	PYZ=	-2.	PZX= 114684.

Figure 31 (Con't)

APPENDIX A

This Appendix presents the mass properties data in the NASA-MSC format. Design data for both the orbiter and booster, and weight summaries for the orbiter, booster, and combined launch configuration are included.

VEHICLE CHARACTERISTICS

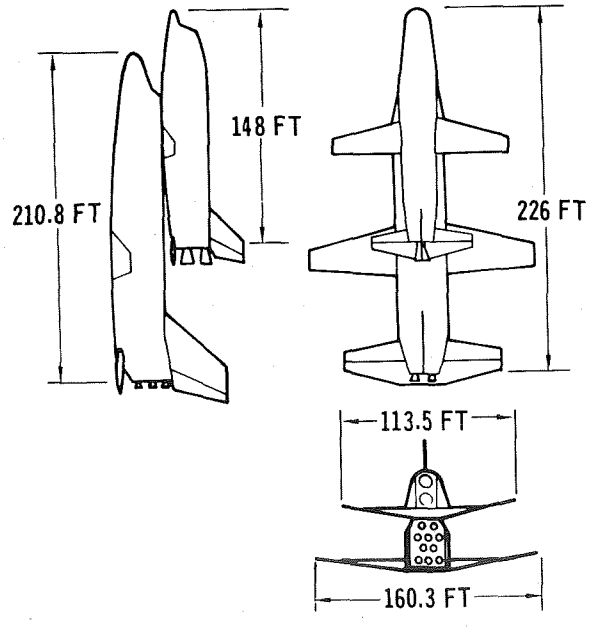

PAYLOAD: 25,000 LB (UP & DOWN)
PAYLOAD BAY: 15 FT x 60 FT
GROSS LIFT OFF WT: 2.854 M LB
CROSS RANGE: 230 N.M.
MANEUVERING ΔV: 2000 FT/SEC
MAX L/D HYPERSONIC
ORBITER: 1.6
BOOSTER: 1.6
LANDING SPEED: 138 KNOTS
MAX L/D SUBSONIC
ORBITER: 8.10
BOOSTER: 7.15
LANDING WEIGHT
ORBITER: 158,840 LB
BOOSTER: 317,310 LB

Figure 32

GENERAL ARRANGEMENT – ORBITER

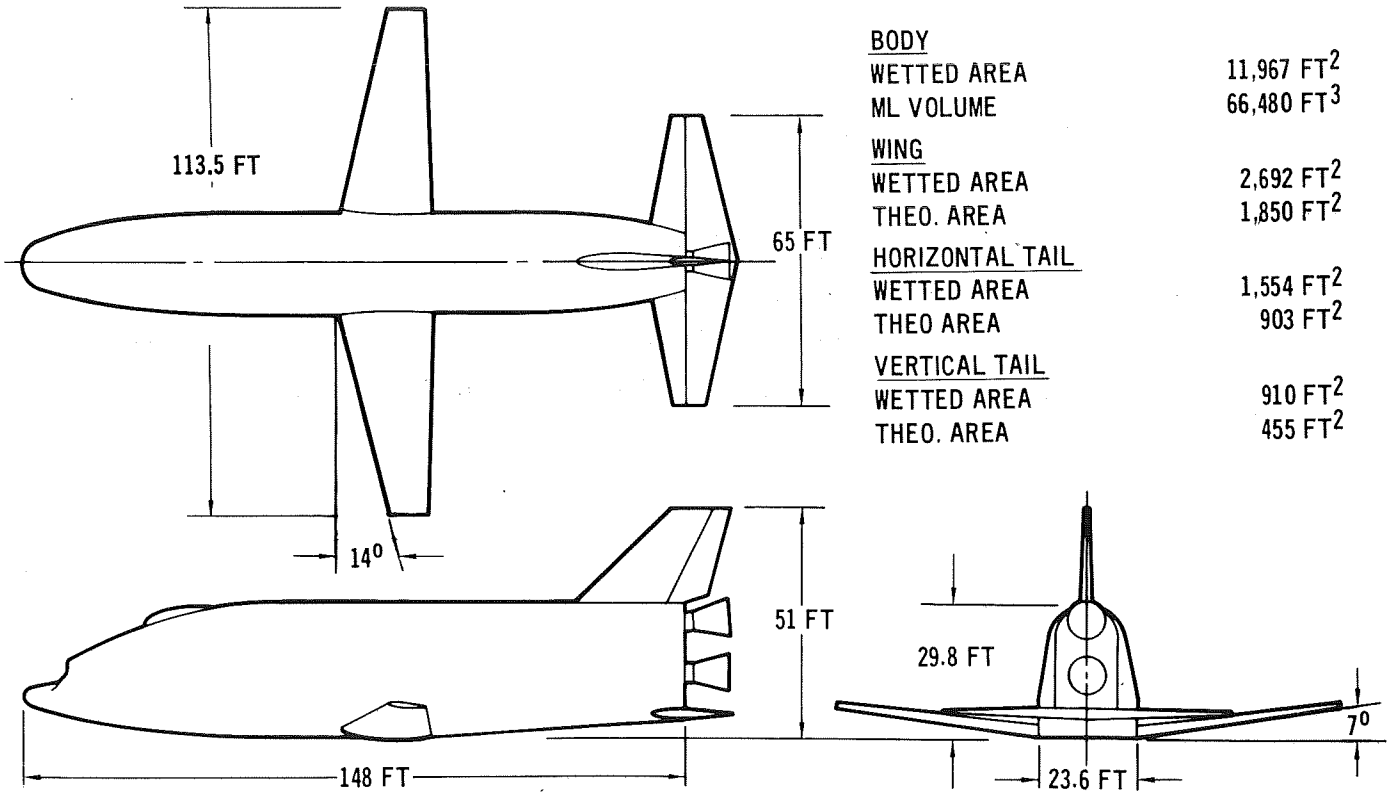

BODY	
WETTED AREA	11,967 FT^2
ML VOLUME	66,480 FT^3
WING	
WETTED AREA	2,692 FT^2
THEO. AREA	1,850 FT^2
HORIZONTAL TAIL	
WETTED AREA	1,554 FT^2
THEO AREA	903 FT^2
VERTICAL TAIL	
WETTED AREA	910 FT^2
THEO. AREA	455 FT^2

Figure 33

GENERAL ARRANGEMENT – BOOSTER

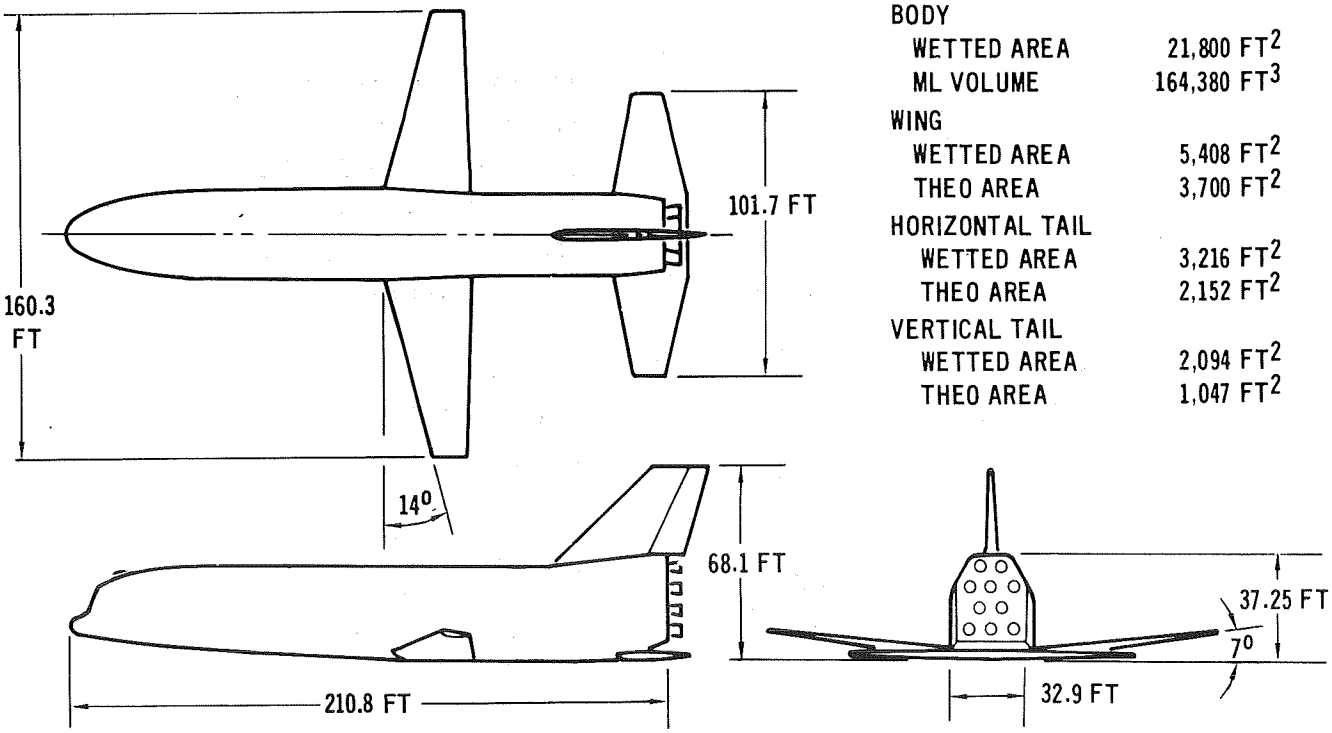

BODY	
WETTED AREA	21,800 FT^2
ML VOLUME	164,380 FT^3
WING	
WETTED AREA	5,408 FT^2
THEO AREA	3,700 FT^2
HORIZONTAL TAIL	
WETTED AREA	3,216 FT^2
THEO AREA	2,152 FT^2
VERTICAL TAIL	
WETTED AREA	2,094 FT^2
THEO AREA	1,047 FT^2

Figure 34

SPACECRAFT DESIGN DATA STATEMENT

CONFIGURATION - ORBITER

BY
REFERENCE MIL-M-38310A, SP-6004, AN-9103-D

SYSTEM/AIRFRAME DESIGN

1.0 AERODYNAMIC SURFACES	WING	H. TAIL	V. TAIL
VOLUME (WETTED, OUTER MOLD LINE, FT^3)	–	–	–
SURFACE AREA OF ABOVE VOLUME (FT^2)	2692	1554	910
GROSS AREA (FT^2)	1850	903	455
SPAN (FT)	113.5	65	21.2
MEAN AERODYNAMIC CHORD LENGTH (FT)	17.5	14.9	22.4
THEORETICAL ROOT CHORD, LENGTH (IN)	289	246	350
, MAX THICKNESS (IN)	40.5	29.5	42.0
THEORETICAL TIP CHORD, LENGTH (IN)	102	87	165
, MAX THICKNESS (IN)	10.2	10.4	19.8

2.0 BODY STRUCTURE (ALSO NAC & PYL)	CABIN	CARGO	REMAIN	NAC&PYL
VOLUME (WETTED MOLD LINE, FT^3)	1162	10603	54715	
PRESSURIZED VOLUME (FT^3)	1162			
SURFACE AREA (WETTED, FT^2)	613	3181	11597	
MAXIMUM LENGTH (FT)	20	60	148	
MAXIMUM DEPTH (FT)	83	15 dia	29.8	
MAXIMUM WIDTH (FT)	11.4	15 dia	23.6	
TOTAL WETTED OUTER MOLD LINE VOLUME (FT^3)				66480
TOTAL WETTED OUTER MOLD LINE SURFACE AREA (FT^2)				11967

3.0 INDUCED ENVIR. PROT.	WING	H. TAIL	V. TAIL	BODY	NAC&PYL
VOLUME DELTA WITHIN 1.0 & 2.0 (FT^3)	–	–	–	–	–
SURFACE AREA DELTA WITHIN 1.0 & 2.0 (FT^2)	–	–	–	–	–
WINDWARD UNIT WT. (LB/FT^2)	1.4	1.4	–	2.6	–
LEEWARD UNIT WT. (LB/FT^2)	0	0	–	0.3	–

4.0 LAUNCH RECOVERY AND DOCKING	MAIN	NOSE	OTHER
LANDING GEAR (MAX. VERT. LOAD/GEAR, LB)	213,000	69,000	–
LENGTH, OLEO EXTENDED (INCHES)*	120	118	–
OLEO TRAVEL (INCHES)**	16	16	
STRUCTURAL	STRESS	G.W.	ULT.L.F.
FLIGHT	161,910		3.5
LANDING	158,840		3.75
LIMIT LANDING SINKING SPEED (FT/SEC)	10 @ 158840 G.W.		
PRESSURIZED CABIN ULT.DSN. PRESS. DIFF. FLT. (PSI)			29.2
AIRFRAME WEIGHT (AS DEFINED IN AN-W-11) (LBS)			–
AXLE TO TRUNNION **FULLY-EXTENDED TO FULLY COLLAPSED			–

SYSTEM DESIGN

5.0 MAIN PROPULSION	LIFT OFF	LANDING
NUMBER OF ENGINES	2	4
MAX SL STATIC THRUST PER ENG (LB)	400000	14500
TOTAL PROPELLANT TANKAGE VOLUME (FT^3)	19030	–
TOTAL JP FUEL TANKAGE VOLUME (FT^3)	–	84

6.0 THROUGH 16.0	
MAXIMUM ELECTRICAL POWER (KW)	7
PRESSURIZED SURFACE AREA (FT^2)	613
MAXIMUM MISSION DURATION (DAYS)	7
NUMBER OF CREW	2
17.0 THROUGH 21.0	
MAXIMUM NUMBER OF PERSONNEL INCL. CREW	2
MAXIMUM CARGO (LB)	25000
MAXIMUM CARGO DENSITY (LB/FT^3)	2.4
22.0 THROUGH 27.0	
CAPACITY PROPELLANT WEIGHT (LB)	405410
CAPACITY JP FUEL WEIGHT (LB)	3670
GENERAL/MISSION DESIGN	
MAXIMUM DESIGN GROSS WEIGHT (LB)	602280
MAXIMUM BOOST LOAD FACTOR 3g at 602280	G.W.
MAXIMUM BOOST DYNAMIC PRESSURE (LB/FT^2)	500
MAIN ENGINE SPECIFIC IMPULSE (LB SEC/LB)	454.8
DELTA VELOCITY AVAILABLE (FT/SEC)	17965
ENTRY VELOCITY (FT/SEC)	25950
ENTRY WEIGHT (LB)	161910
BALLISTIC COEFFICIENT (W/C_DA, LB/FT^2)	–
MAXIMUM HEATING RATE (BTU/FT^2 SEC)	62

FACTORS OF SAFETY (DEFINE) 1.4 EXCEPT FOR CRUISE AND LANDING WHICH = 1.5

MARGINS (DEFINE)
VARIES

CONTINGENCY (DEFINE) NO SPECIFIC ALLOWANCE FOR CONTINGENCY IN ADDITION TO THAT FROM EMPIRICAL WEIGHT CORRELATIONS

WEIGHT GROWTH (DEFINE)
NO GROWTH ALLOWANCE

Figure 35

SPACECRAFT DESIGN DATA STATEMENT

CONFIGURATION - BOOSTER BY REFERENCE MIL-M-38310A, SP-6004, AN-9103-D

SYSTEM/AIRFRAME DESIGN

1.0 AERODYNAMIC SURFACES	WING	H. TAIL	V. TAIL
VOLUME (WETTED, OUTER MOLD LINE, FT^3)	–	–	–
SURFACE AREA OF ABOVE VOLUME (FT^2)	5408	3216	2094
GROSS AREA (FT^2)	3700	2152	1047
SPAN (FT)	160	101.6	30
MEAN AERODYNAMIC CHORD LENGTH (FT)	24.8	22.5	32.7
THEORETICAL ROOT CHORD, LENGTH (IN)	408	343	520
, MAX THICKNESS (IN)	57.1	41.2	62.4
THEORETICAL TIP CHORD, LENGTH (IN)	144	136	240
, MAX THICKNESS (IN)	14.4	16.3	28.8

2.0 BODY STRUCTURE (ALSO) NAC & PYL)	CABIN	CARGO	REMAIN	NAC&PYL
VOLUME (WETTED MOLD LINE, FT^3)	260		164120	
PRESSURIZED VOLUME (FT^3)	260		–	
SURFACE AREA (WETTED, FT^2)	275		21641	
MAXIMUM LENGTH (FT)	8.8		210.8	
MAXIMUM DEPTH (FT)	6.3		37.25	
MAXIMUM WIDTH (FT)	6.8		32.9	

TOTAL WETTED OUTER MOLD LINE VOLUME (FT^3)	164380
TOTAL WETTED OUTER MOLD LINE SURFACE AREA (FT^2)	21800

3.0 INDUCED ENVIR. PROT.	WING	H. TAIL	V. TAIL	BODY	NAC&PYL
VOLUME DELTA WITHIN 1.0 & 2.0 (FT^3)	–	–	–	–	–
SURFACE AREA DELTA WITHIN 1.0 & 2.0 (FT^2)	–	–	–	–	–
WINDWARD UNIT WT. (LB/FT^2)	.41	.43	.46	1.32	–
LEEWARD UNIT WT. (LB/FT^2)	.41	.43	–	1.21	–

4.0 LAUNCH RECOVERY & DOCKING	MAIN	NOSE	OTHER
LANDING GEAR (MAX. VERT. LOAD/GEAR, LB)	429,000	138,500	-
LENGTH, OLEO EXTENDED (INCHES)*	175	195	-
(LEO TRAVEL (INCHES)**	16	16	-

STRUCTURAL	STRESS G.W.	ULT.L.F.
FLIGHT	397,310	3.5
LANDING	317,310	3.75

LIMIT LANDING SINKING SPEED (FT/SEC)	10 @ 317,310 G.W.
PRESSURIZED CABIN ULT. DSN. PRESS. DIFF. FLT. (PSI)	29.2
AIRFRAME WEIGHT (AS DEFINED IN AN-W-11) (LBS)	-
AXLE TO TRUNNION ** FULLY-EXTENDED TO FULLY COLLAPSED	-

SYSTEM DESIGN

5.0 MAIN PROPULSION	LIFTOFF	LANDING
NUMBER OF ENGINES	10	6
MAX SL STATIC THRUST PER ENG (LB)	400000	17000
TOTAL PROPELLANT TANKAGE VOLUME (FT^3)	104624	–
TOTAL JP FUEL TANKAGE VOLUME (FT^3)	–	1855

6.0 THROUGH 16.0	
MAXIMUM ELECTRICAL POWER (KW)	6
PRESSURIZED SURFACE AREA (FT^2)	275
MAXIMUM MISSION DURATION (DAYS)	1
NUMBER OF CREW	2
17.0 THROUGH 21.0	
MAXIMUM NUMBER OF PERSONNEL INCL. CREW	2
MAXIMUM CARGO (LB)	–
MAXIMUM CARGO DENSITY (LB/FT^3)	–
22.0 THROUGH 27.0	
CAPACITY PROPELLANT WEIGHT (LB)	1877120
CAPACITY JP FUEL WEIGHT (LB)	81200
GENERAL/MISSION DESIGN	2251910
MAXIMUM DESIGN GROSS WEIGHT (LB)	2251910
MAXIMUM BOOST LOAD FACTOR 2.5g AT 2251910	G.W.
MAXIMUM BOOST DYNAMIC PRESSURE (LB/FT^2)	500
MAIN ENGINE SPECIFIC IMPULSE (LB SEC/LB)	440.8
DELTA VELOCITY AVAILABLE (FT/SEC)	14635
ENTRY VELOCITY (FT/SEC)	10600
ENTRY WEIGHT (LB)	414730
BALLISTIC COEFFICIENT (W/D_CA, LB/FT^2)	–
MAXIMUM HEATING RATE (BTU/FT^2 SEC)	16

FACTORS OF SAFETY (DEFINE)
SAME AS ORBITER

MARGINS (DEFINE)
SAME AS ORBITER

CONTINGENCY (DEFINE)
SAME AS ORBITER

WEIGHT GROWTH (DEFINE)
SAME AS ORBITER

Figure 36

SPACECRAFT SUMMARY WEIGHT STATEMENT

CONFIGURATION: Orbiter

CODE	SYSTEM	ITEM OR MODULE A	B	C	D	E	F	SPACECRAFT M	U
1.0	AERODYNAMIC SURFACES	21440	21440	21440	21440	21440			
2.0	BODY STRUCTURE	39180	39180	39180	39180	39180			
3.0	INDUCED ENVIR PROTECTION	18450	18450	18450	18450	18450			
4.0	LAUNCH RECOVERY & DOCKING	6400	6400	6400	6400	6400			
5.0	MAIN PROPULSION	31300	31300	31300	31300	31300			
6.0	ORIENT CONTROL SEP & ULL	2500	2500	2500	2500	2500			
7.0	PRIME POWER SOURCE	3280	3280	3280	3280	3280			
8.0	POWER CONV & DISTR	4290	4290	4290	4290	4290			
9.0	GUIDANCE & NAVIGATION	1470	1470	1470	1470	1470			
10.0	INSTRUMENTATION	390	390	390	390	390			
11.0	COMMUNICATION	430	430	430	430	430			
12.0	ENVIRONMENTAL CONTROL	1240	1240	1240	1240	1240			
13.0	(RESERVED)								
14.0	PERSONNEL PROVISIONS	200	200	200	200	200			
15.0	CREW STA CONTRL & PAN	725	725	725	725	725			
16.0	RANGE SAFETY & ABORT								
SUBTOTALS		131295	131295	131295	131295	131295			
17.0	PERSONNEL	400	400	400	400	400			
SUBTOTALS		131695	131695	131695	131695	131695			
18.0	CARGO	25000	25000	25000	25000	25000			
SUBTOTALS		156695	156695	156695	156695	156695			
19.0	ORDNANCE	–							
20.0	BALLAST	–							
21.0	RESID PROP & SERV ITEMS	1545	1545	1545	1545	1545			
SUBTOTALS									
22.0	RES PROP & SERV ITEMS	600	600	600	600	600			
SUBTOTALS		158840	158840	158840	158840	158840			
23.0	INFLIGHT LOSSES	11910	11910	2000	100	–			
24.0	THRUST DECAY PROPELLANT								
SUBTOTALS		170750	170750	160840	158940				
25.0	FULL THRUST PROPELLANT	431530	31530	3070	3070	–			
SUBTOTALS									
26.0	THRUST PROP BUILDUP								
27.0	PRE-IGNITION LOSSES								
28.0	LES EFFECTIVE WT								
TOTALS (LB)		602280	202280	163910	162010	158840			
DESIGN ENVELOPE VOLUME (FT^3)									
PRESSURIZED VOLUME (FT^3)									
DESIGN ENVEL SURF AREA (FT^2)									
DESIGN NO. MEN/DAYS									

DESIGNATIONS:

ITEM OR MODULE
- A Separation
- B Injection
- C Re-entry
- D Max. Cruise
- E Landing
- F

SPACECRAFT
- M MANNED LAUNCH
- U UNMANNED LAUNCH

NOTES & SKETCHES:

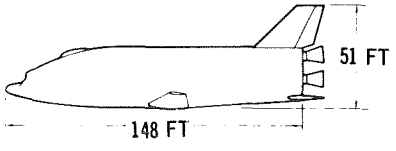

Figure 37

SPACECRAFT SUMMARY WEIGHT STATEMENT

CONFIGURATION: Booster

CODE	SYSTEM	ITEM OR MODULE						SPACECRAFT	
		A	B	C	D	E	F	M	U
1.0	AERODYNAMIC SURFACES	54050	54050	54050	54050				
2.0	BODY STRUCTURE	92700	92700	92700	92700				
3.0	INDUCED ENVIR PROTECTION	30130	30130	30130	30130				
4.0	LAUNCH RECOVERY & DOCKING	12750	12750	12750	12750				
5.0	MAIN PROPULSION	106395	106395	106395	106395				
6.0	ORIENT CONTROL SEP & ULL	3500	3500	3500	3500				
7.0	PRIME POWER SOURCE	3000	3000	3000	3000				
8.0	POWER CONV & DISTR	7580	7580	7580	7580				
9.0	GUIDANCE & NAVIGATION	800	800	800	800				
10.0	INSTRUMENTATION	390	390	390	390				
11.0	COMMUNICATION	260	260	260	260				
12.0	ENVIRONMENTAL CONTROL	405	405	405	405				
13.0	(RESERVED)								
14.0	PERSONNEL PROVISIONS	–	–	–	–				
15.0	CREW STA CONTRL & PAN	725	725	725	725				
16.0	RANGE SAFETY & ABORT								
SUBTOTALS		312685	312685	312685	312685				
17.0	PERSONNEL	–	–	–	–				
SUBTOTALS									
18.0	CARGO	–	–	–	–				
SUBTOTALS									
19.0	ORDNANCE								
20.0	BALLAST	–	–	–	–				
21.0	RESID PROP & SERV ITEMS	3425	3425	3425	3425				
SUBTOTALS									
22.0	RES PROP & SERV ITEMS	1200	1200	1200	1200				
SUBTOTALS		317310	317310	317310	317310				
23.0	INFLIGHT LOSSES	17420	17420	100	–				
24.0	THRUST DECAY PROPELLANT								
SUBTOTALS		334730	334730	317410					
25.0	FULL THRUST PROPELLANT	1917180	80000	80000	–				
SUBTOTALS		2251910							
26.0	THRUST PROP BUILDUP	27220	–	–	–				
27.0	PRE-IGNITION LOSSES								
28.0	LES EFFECTIVE WT								
TOTALS	(LB)	2279130	414730	397410	317310				
DESIGN ENVELOPE VOLUME	(FT^3)								
PRESSURIZED VOLUME	(FT^3)								
DESIGN ENVEL SURF AREA	(FT^2)								
DESIGN NO. MEN/DAYS									

DESIGNATIONS:

ITEM OR MODULE
- A Ignition
- B Separation
- C Max. Cruise
- D Landing
- E
- F

SPACECRAFT
- M MANNED LAUNCH
- U UNMANNED LAUNCH

NOTES & SKETCHES:

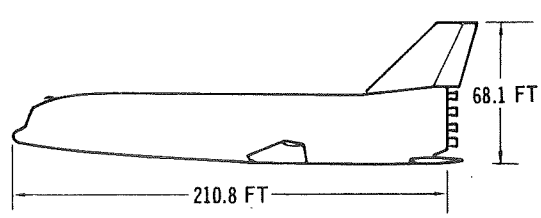

Figure 38

SPACECRAFT SUMMARY WEIGHT STATEMENT

CONFIGURATION: Booster - Orbiter Combined

CODE	SYSTEM	ITEM OR MODULE						SPACECRAFT	
		A	B	C	D	E	F	M	U
1.0	AERODYNAMIC SURFACES	75490	75490	75490	75490				
2.0	BODY STRUCTURE	131880	131880	131880	131880				
3.0	INDUCED ENVIR PROTECTION	48580	48580	48580	48580				
4.0	LAUNCH RECOVERY & DOCKING	19150	19150	19150	19150				
5.0	MAIN PROPULSION	137695	137695	137695	137695				
6.0	ORIENT CONTROL SEP & ULL	6000	6000	6000	6000				
7.0	PRIME POWER SOURCE	6280	6280	6280	6280				
8.0	POWER CONV & DISTR	11870	11870	11870	11870				
9.0	GUIDANCE & NAVIGATION	2270	2270	2270	2270				
10.0	INSTRUMENTATION	780	280	780	780				
11.0	COMMUNICATION	690	690	690	690				
12.0	ENVIRONMENTAL CONTROL	1645	1645	1645	1645				
13.0	(RESERVED)								
14.0	PERSONNEL PROVISIONS	200	200	200	200				
15.0	CREW STA CONTRL & PAN	1450	1450	1450	1450				
16.0	RANGE SAFETY & ABORT								
SUBTOTALS		443980	443980	443980	443980				
17.0	PERSONNEL	400	400	400	400				
SUBTOTALS									
18.0	CARGO	25000	25000	25000	25000				
SUBTOTALS		469380	469380	469380	469380				
19.0	ORDNANCE								
20.0	BALLAST								
21.0	RESID PROP & SERV ITEMS	4970	4970	4970	4970				
SUBTOTALS									
22.0	RES PROP & SERV ITEMS	1800	1800	1800	1800				
SUBTOTALS		476150	476150	476150	476150				
23.0	INFLIGHT LOSSES	29330	29330	29330	29330				
24.0	THRUST DECAY PROPELLANT								
SUBTOTALS		505480	505480	505480	505480				
25.0	FULL THRUST PROPELLANT	2458710	2348710	1430120	511530				
SUBTOTALS									
26.0	THRUST PROP BUILDUP	27220	-	-	-				
27.0	PRE-IGNITION LOSSES								
28.0	LES EFFECTIVE WT								
TOTALS	(LB)	2881410	2854190	1935600	1017010				
DESIGN ENVELOPE VOLUME	(FT^3)								
PRESSURIZED VOLUME	(FT^3)								
DESIGN ENVEL SURF AREA	(FT^2)								
DESIGN NO. MEN/DAYS									

DESIGNATIONS:

ITEM OR MODULE
- A Ignition
- B Liftoff
- C 1/2 Burn
- D Pre Separation
- E
- F

SPACECRAFT
- M MANNED LAUNCH
- U UNMANNED LAUNCH

NOTES & SKETCHES:

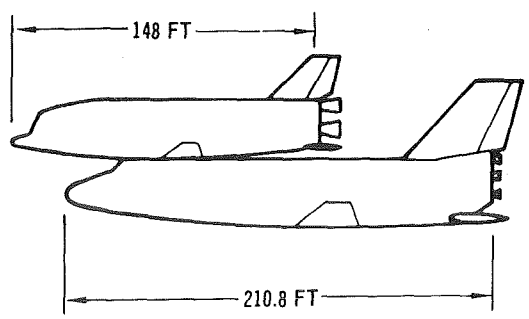

Figure 39

MCDONNELL DOUGLAS ASTRONAUTICS COMPANY
EASTERN DIVISION

Saint Louis, Missouri 63166 (314) 232-0232

MCDONNELL DOUGLAS
CORPORATION