N71-28022

NASA CONTRACTOR REPORT

NASA CR-1760

NASA CR-1760

CASE FILE COPY

NASA LIST OF POTENTIAL SPACE TOOLS AND EQUIPMENT

by Lawrence B. Johnson, Eric Sander, and Stanley Lebow

Prepared by
RAFF ASSOCIATES, INC.
Silver Spring, Md.
for Ames Research Center

NATIONAL AERONAUTICS AND SPACE ADMINISTRATION • WASHINGTON, D. C. • MAY 1971

1. Report No.	2. Government Accession No.	3. Recipient's Catalog No.
NASA CR-1760		

4. Title and Subtitle	5. Report Date
NASA List of Potential Space Tools and Equipment	May 1971
	6. Performing Organization Code
7. Author(s)	8. Performing Organization Report No.
Lawrence B. Johnson, Eric Sander and Stanley Lebow	
9. Performing Organization Name and Address	10. Work Unit No.
Raff Associates, Incorporated Silver Spring, Maryland	11. Contract or Grant No. NAS 2-5073
12. Sponsoring Agency Name and Address	13. Type of Report and Period Covered Contractor Report
National Aeronautics & Space Administration Washington, D.C. 20546	14. Sponsoring Agency Code

15. Supplementary Notes

16. Abstract

This report combines into a single data source, a listing of space tools and equipment developed expressly for extravehicular and intravehicular space activities (EVA, IVA). Describes: (a) purpose, (b) previous solutions, (c) current method of operation, (d) related functional categories, (3) performance, (f) advantages and disadvantages, (g) status, (h) photographs-drawings, (i) specifications, (j) references, (k) sponsor, (1) manufacturer, (m) developer, (n) support equipment, and (o) date of development for each space tool and equipment.

There are twelve sections in this report. Each section groups the space tools and equipment by their specific functions. (1) Bonding and Electroadhesor Tools and Maintenance Equipment, (2) Cutting Tools, (3) Hammers, (4) Illumination Equipment, (5) Gas Leak, Pressure Detection and Measurement Tools and Equipment, (6) Lunar Sampling and Surveying Tools, (7) Orientation & Restraint Tools and Maintenance Equipment, (8) Tools Maintaining Electrical and Electronic Equipment, (9) Tool Kits and Tool Sets, (10) Screwdriving and Torqueing Tools, (11) Tube Connection Tools, & (12) Welders. Other data of interest to space mission planners and designers are also compiled in the appendix of this report.

17. Key Words (Suggested by Author(s))	18. Distribution Statement
Catalog-Listing of Space Tools/Equipment	Unclassified-Unlimited

19. Security Classif. (of this report)	20. Security Classif. (of this page)	21. No. of Pages	22. Price*
Unclassified	Unclassified	428	$3.00

*For sale by the National Technical Information Service, Springfield, Virginia 22151

FOREWORD

This cataloging effort was initiated by the Man-Machine Integration Branch, Biotechnology Division of the NASA, Ames Research Center in a joint effort with Raff Associates of Silver Spring, Maryland, under NASA Contract NAS2-5073.

The primary objective of this effort was to list the devices developed for the United States Government for space operations. Some listed devices are prototypes; others have not gone beyond the design concept stage but the attempt is to make available space tool and equipment data from a single information source, to space mission planners, designers, engineers and technicians. The catalog will supply the user with enough data on the listed tools and equipment to effectively aid in the planning of in-space extravehicular and intravehicular activities (EVA, IVA). EVA and IVA are formally defined by NASA as:

EVA - Activity performed in space or on a celestial body by an Astronaut external to the space vehicle.

IVA - Activity performed in space or on a celestial body by an Astronaut internal to the space vehicle.

The tool data are limited by contractual scope to the categories listed in the introduction.

Updating of space tool and equipment data will be periodic. Any inputs for improving, optimizing, adding onto, extracting or correcting the presented tool data should be initiated with the forms supplied in the back of the catalog.



Charles C. Kubokawa
NASA
Ames Research Center
Moffett Field, California

ACKNOWLEDGEMENTS

The data gathering effort undertaken in the preparation of this catalog was far reaching. To show our appreciation to all individuals who were helpful in making information available would take another volume, but in all fairness, a note of appreciation must be given to certain individuals and organizations.

A large number of the documents, photographs, and other materials shown herein were submitted by technical individuals within a given firm or government agency. In many instances, these individuals were associated with the development of a particular tool. On the other hand, there are a number of people who maintain information on space maintenance and EVA research through their affiliation with Technical Utilization Offices, Public Affairs Offices, and libraries. These individuals normally would not have been identified as key individuals for space tool developments. A special thanks is extended to these individuals who graciously devoted much of their time and energy to help make this cataloging task a success. They are listed in alphabetical order as follows:

Mr. E. J. Asbury
Union Carbide Corporation
Nuclear Division
Oak Ridge Gaseous Diffusion Plant
Oak Ridge, Tennessee

Mr. Alexander Bebenin
Aerospace Technology Division
Library of Congress
Washington, D. C.

Mr. Herman T. Blaise
Space Simulation Experiments Office
National Aeronautics and Space Administration
Marshall Space Flight Center
Huntsville, Alabama 35812

Miss Ann Bownds
Photographic Laboratory
National Aeronautics and Space Administration
Manned Spacecraft Center
Houston, Texas 77058

Mr. T. B. Buckbee
McDonnell Douglas Corporation
Huntington Beach, California

Mr. J. J. Casserly
Honeywell Incorporated
Aero Space Division
2600 Ridge Way Road
Minneapolis, Minnesota 55413

Mr. Robert G. Clodfelter
Support Technology Division
United States Air Force
AFAPL(AFSC)
Wright-Patterson Air Force Base, Ohio 45433

Mr. Donald C. Crouch
Denver Division
Martin Marietta Corporation
Denver, Colorado 80201

Mr. Isaac Edmonds
Mechanical Engineering Laboratory
National Aeronautics and Space Administration
Marshall Space Flight Center
Huntsville, Alabama 35812

Mr. L. C. Elmore
Quantic Industries
P. O. Box 35
Willow Grove, Pennsylvania 19090

Mr. James K. Figenshau
Vandale Company
Box 337
Long Lake, Minnesota 55356

Mrs. Virginia G. Fincik
Aero Space Audio Visual Service
Detachment 5
United States Air Force
Headquarters AADS (MAC)
1221 South Fern Street
Arlington, Virginia

Mrs. Anne Folsom
Quality Control
National Aeronautics and Space Administration
Manned Spacecraft Center
Houston, Texas 77058

Mr. H. E. Freeman
Missiles and Space Division
LTV Aero Space Corporation
P. O. Box 6267
Dallas, Texas 75222

Dr. Ed Goodrich
Space Division
Kent Facility
The Boeing Company
P. O. Box 3868
Seattle, Washington 98124

Mr. Theodore W. Holsten
Aeronautical Division
Honeywell, Incorporated
2600 Ridge Way Road
Minneapolis, Minnesota 55413

Mr. Curtis Hunt
Public Affairs Office
National Aeronautics and Space Administration
Marshall Space Flight Center
Huntsville, Alabama 35812

Mr. Kenneth F. Jacobs
Technical Utilization Office
National Aeronautics and Space Administration
Goddard Space Center, Maryland

Mr. Donald W. Jones
Aero Vac Corporation
P. O. Box 448
Troy, New York 12181

Mr. Paul Kurbjun
National Aeronautics and Space Administration
Langley Research Center
Langley Air Force Base, Virginia

Mr. Walter Kuspareck
Sperry Rand Corporation
Space Support Division
716 Arcadia Circle
Huntsville, Alabama 35801

Mr. E. E. Lane
Space Division
North American Rockwell Corporation
12214 Lakewood Boulevard
Downey, California 90241

Mr. John A. Lea
SPAR Aero Space Products Limited
P. O. Box 6022
Toronto International Airport
Ontario, Canada

Mr. Basil Leftheris
Research Department
582 Plant 35
Grumman Aircraft Engineering Corporation
Bethpage, New York 11714

Mr. R. H. Maltby
Director of Information
Aeronautical Systems Division
United States Air Force
Wright-Patterson Air Force Base, Ohio 45433

Mr. John McLeaish
Chief, Public Information Office
Public Affairs Office, AP-3
National Aeronautics and Space Administration
Manned Spacecraft Center
Houston, Texas 77058

Mr. Gerald Miller
General Electric Company
Valley Forge, Pennsylvania

Mr. James S. Montague
Institute of Design
Illinois Institute of Technology
Technology Center
Chicago, Illinois

Mr. Donald Morrison
Space Division of North American Rockwell
12214 Lakeward Boulevard
Downey, California 90241

Mr. Donald Norman
General Electric Company
Valley Forge, Pennsylvania

Mr. Fred Oliver
AFAPL, APFH
United States Air Force
Wright-Patterson Air Force Base, Ohio 45433

Mr. Gavin Peters
CAPSULAR Products Division
National Cash Register
Dayton, Ohio 45409

Mr. Gunther Pfanner
Fairchild Hiller
Republic Aviation Division
Farmingdale, Long Island, New York 11735

Mr. Kenneth O. Poll
Electronics and Space Division
Emerson Company
8100 Florissant Street
St. Louis, Missouri 63136

Mr. John Rasquin
Electrical Development Branch
National Aeronautics and Space Administration
Marshall Space Flight Center
Huntsville, Alabama 35812

Mr. Max B. Rodin
Argonne National Laboratory
9700 South Kase Avenue
Argon, Illinois 60439

Mr. T. L. Rogers
Space Division
North American Rockwell Corporation
12214 Lakeward Boulevard
Downey, California 90241

Mr. Gilbert Rolan
AMF International
American Machine and Foundry Company
261 Madison Avenue
New York, New York 10016

Mr. F. R. Schollhammer
Hamilton Standard
United Aircraft Corporation
Windsor Locks, Connecticut 06096

Mr. M. M. Schuster
Hi-Shear Corporation
2600 Ski Park Drive
Torrance, California 90509

Mr. Joe C. Spencer
Martin Marietta Corporation
Systems Research Department
P. O. Box 179
Denver, Colorado 80201
Mail No. 1640

Mr. Robert W. Struble
Kellett Aircraft Corporation
P. O. Box 35
Willow Grove, Pennsylvania 19090

Mr. H. V. Swanigan
McDonnell Douglas Corporation
5301 Bolsa Avenue
Huntington Beach, California 92647

Mr. Otto Trout
National Aeronautics and Space Administration
Langley Research Center
Langley Air Force Base, Virginia

Mrs. Ruth Velazco
Popular Science
355 Lexington Avenue
New York, New York

Mrs. Margaret S. Ware
Pictures Control Office, POB 6
NASA Headquarters
Washington, D. C.

Mr. Fred Wells
S&E Qual
National Aeronautics and Space Administration
Marshall Space Flight Center
Huntsville, Alabama 35812

Mr. Daniel S. Wentz, II
Photographic Laboratory
National Aeronautics and Space Administration
Langley Research Center
Langley Air Force Base, Virginia

Mr. John P. Wheeler
Technology Utilization Office
National Aeronautics and Space Administration
Manned Spacecraft Center
Houston, Texas 77058

Mr. William Wilson
Mechanical Engineering Laboratory
National Aeronautics and Space Administration
Marshall Space Flight Center
Huntsville, Alabama 35812

Dr. Edward C. Wortz
Life Science Department
AIRESEARCH Manufacturing Company
Garrett Corporation
9851-9951 Sepulveda Boulevard
Los Angeles, California 90009

TABLE OF CONTENTS

	Page
FOREWORD	iii
ACKNOWLEDGEMENTS	v
LIST OF ILLUSTRATIONS	xv
INTRODUCTION	1
SECTION 1 - Bonding and Electroadhesor Tools and Maintenance Equipment	1.0
Exothermic Space Bonding System	1.1.1
Extravehicular Space Adhesive System	1.2.1
Flexible Prototype (Single Pole) Electroadhesor	1.3.1
Hand Model Prototype (Single Pole) Electroadhesor	1.4.1
Hand Model Prototype (Two Pole) Electroadhesor	1.5.1
Restraint Buttons and Applicator	1.6.1
Stud Bonding Tool	1.7.1
SECTION 2 - Cutting Tools	2.0
Power Drill	2.1.1
Power Saw	2.2.1
S-IVB Window Emplacement Tool	2.3.1
Window Saw Cutting Tool	2.4.1
SECTION 3 - Hammers	3.0
Dead Blow Hammer	3.1.1
Winchester Space Tool	3.2.1
SECTION 4 - Illumination Equipment	4.0
Work Lights	4.1.1
SECTION 5 - Gas Leak, Pressure Detection and Measurement Tools and Equipment	5.0
Mass Flowmeter	5.1.1
Pilot Model Leak Detector	5.2.1

Page

SECTION 6 - Lunar Sampling and Surveying Tools. 6.0

Apollo Lunar Surface Drill (ALSD) System 6.1.1
Color Chart. 6.2.1
Hand Lens. 6.3.1
Jacob Staff. 6.4.1
Modified Abney Level 6.5.1
Multipurpose Geological Hammer 6.6.1
Multipurpose Scoop 6.7.1
Orthogonal Clinometer and Sun Gnomon 6.8.1
Powered Lunar Geologist Tool (PLGT). 6.9.1
Sample Retriever 6.10.1
Sample Stowage Bag 6.11.1
Sample Weighing Device 6.12.1

SECTION 7 - Orientation and Restraint Tools and Maintenance Equipment 7.0

Astronaut Boom Attachment System 7.1.1
Extendable Boom 7.2.1
KUPU Latch 7.3.1
Lanyard System 7.4.1
Martin Space Tool Kit Case 7.5.1
Positioning Tool (Maintenance Tether System) 7.6.1
Reversible Geological Tool Container 7.7.1
Rigid Rope 7.8.1
Serpentuator (Serpentine Actuator) 7.9.1
Small Parts Holder 7.10.1
Small Parts Manipulator (Fingernail) 7.11.1
Tool Box 7.12.1
Tool Cuff System 7.13.1
Variable Flexibility Tether System 7.14.1
Zero Gravity Surface and Interlocking Structure. . . . 7.15.1

SECTION 8 - Tools Maintaining Electrical and Electronic Equipment. 8.0

Coaxial Cable Cutter 8.1.1
Multipurpose Hand Wiring Tool. 8.2.1

	Page
Program Control Card Extractor System	8.3.1
SECTION 9 - Tool Kits and Tool Sets.	9.0
Crewman In-Flight Tool Set.	9.1.1
Martin Space Tool Kit	9.2.1
Prototype Lunar Geological Tool Kit	9.3.1
SECTION 10 - Screwdriving and Torqueing Tools.	10.0
Aero Jet Bolt Removal Tool (BRT).	10.1.1
Apollo Adjustable End Wrench.	10.2.1
Apollo In-Flight Maintenance Tool	10.3.1
Apollo T-Handle	10.4.1
Apollo Torque Wrench	10.5.1
Boeing Torque Cancelling Tool	10.6.1
Bolt Installation and Removal Tool (BIRT)	10.7.1
Inertia Wheel	10.8.1
Motor/Handle Assembly	10.9.1
Nut and Bolt Wrench (NAB)	10.10.1
Open End Flat Ratchet Wrench.	10.11.1
Pliers-Wrench (PLENCH).	10.12.1
Power Impact Wrench	10.13.1
Ratchet Hand Tool	10.14.1
Screwdriver Ratchet Handle.	10.15.1
Space Power Tool System	10.16.1
Space Tool Mitten	10.17.1
Spin Torque Space Tool	10.18.1
Spiral Drive Screwdriver.	10.19.1
T-Handle Multi-Functional Tool.	10.20.1
Zero Reaction Space Wrench.	10.21.1
SECTION 11 - Tube Connection Tools	11.0
Semi-Remote Spunfit Wrench (Space Union and Fitting).	11.1.1
Spunfit Wrench (Space Union and Fitting).	11.2.1
Tube Swaging Device	11.3.1

	Page
SECTION 12 - Welders	12.0
Hand-Held, Electron-Beam Welder	12.1.1
Materials Joining Tool	12.2.1
Plasma Electron-Beam Welder	12.3.1
Portable Electron-Beam Welder (0.5 KW)	12.4.1
Westinghouse Electron-Beam Welder	12.5.1
BIBLIOGRAPHY	BIB.1
APPENDIX A - Tool/Bibliographic Key	A.1
APPENDIX B - Space Equipment and Tool Matrix: Related Functional Categories and Source of Power	B.1
APPENDIX C - Key Individuals in Space Tool and Maintenance Operations	C.1
APPENDIX D - Index and Literature Search	D.1
APPENDIX E - Space Equipment and Tools Not Included in the Catalog (1969)	E.1
APPENDIX F - Acronyms and Abbreviations	F.1
APPENDIX G - Forms for Updating Tool Entries and for the Submission of New Tool Data	G.1

LIST OF ILLUSTRATIONS

Figure		Page
1-1	Exothermic Space Bonding System	1.1.3
1-2a	Extravehicular Space Adhesive System, Assembled.	1.2.3
1-2b	Extravehicular Space Adhesive System, Disassembled.	1.2.3
1-3	Flexible Prototype (Single-Pole) Electroadhesor.	1.3.3
1-4	Hand Model Prototype (Single-Pole) Electroadhesor.	1.4.3
1-5	Hand Model Prototype (Two-Pole) Electroadhesor Principles of Operation Drawing.	1.5.3
1-6a	Restraint Buttons and Applicator.	1.6.3
1-6b	Restraint Buttons.	1.6.3
1-7	Stud Bonding Tool.	1.7.3
2-1	Power Drill.	2.1.3
2-2	Power Saw.	2.2.3
2-3	S-IVB Window Emplacement Tool Kit.	2.3.3
2-4	Window Saw Cutting Tool.	2.4.3
3-1	Dead Blow Hammer.	3.1.3
3-2	Winchester Space Tool.	3.2.3
4-1a	Work Lights	4.1.3
4-1b	Work Light Reflector.	4.1.3
5-1	Mass Flowmeter.	5.1.3
5-2	Pilot Model Leak Detector.	5.2.3
6-1	Apollo Lunar Surface Drill (ALSD) System	6.1.3
6-2	Color Chart.	6.2.2
6-3	Hand Lens.	6.3.3

Figure		Page
6-4	Jacob Staff.	6.4.3
6-5	Modified Abney Level and Multipurpose Scoop.	6.5.3
6-6	Multipurpose Geological Hammer.	6.6.3
6-7	Multipurpose Scoop and Sample Retriever.	6.7.3
6-8	Orthogonal Clinometer and Sun Gnomon.	6.8.3
6-9	Powered Lunar Geologist Tool (PLGT).	6.9.3
6-10	Sample Retriever.	6.10.3
6-11	Sample Stowage Bag.	6.11.3
6-12	Sample Weighing Device.	6.12.3
7-1	Astronaut Boom Attachment System.	7.1.3
7-2	Extendable Boom.	7.2.3
7-3a	KUPU Latch.	7.3.3
7-3b	KUPU Latch Joining Three Plates.	7.3.3
7-4a	Lanyard System	7.4.3
7-4b	Lanyard Tools.	7.4.3
7-5	Martin Space Tool Kit Case.	7.5.3
7-6	Positioning Tool.	7.6.3
7-7a	Reversible Geological Tool Container.	7.7.3
7-7b	Reversible Geological Tool Container in the Lunar Surface Configuration.	7.7.4
7-8	Rigid Rope.	7.8.3
7-9	Serpentuator.	7.9.3
7-10	Small Parts Holder.	7.10.3
7-11	Small Parts Manipulator.	7.11.3
7-12a	Tool Box Worn by Astronaut.	7.12.3
7-12b	Internal View of Tool Box.	7.12.3

Figure		Page
7-13a	Tool Cuff System (Prototype B).	7.13.3
7-13b	Tool Cuff (Prototype A).	7.13.4
7-13c	Tool Cuff (Breadboard).	7.13.4
7-14	Variable Flexibility Tether System.	7.14.3
7-15a	A Sample Sphere of an Interlocking Structure Poised to Interlock with a Zero Gravity Surface.	7.15.3
7-15b	A Sample Sphere of an Interlocking Structure Interlocking with a Zero Gravity Surface	7.15.3
8-1	Coaxial Cable Cutter.	8.1.3
8-2	Multipurpose Hand Tool	8.2.3
8-3	Program Control Card Extractor System.	8.3.3
9-1	Crewman In-Flight Tool Set.	9.1.3
9-2	Martin Space Tool Kit.	9.2.3
9-3	Prototype Lunar Geological Tool Kit.	9.3.3
10-1a	Aero Jet Bolt Removal Tool Used in Underwater Simulation.	10.1.3
10-1b	Aero Jet Bolt Removal Tool.	10.1.3
10-2	Apollo Adjustable End Wrench.	10.2.2
10-3a	Apollo In-Flight Maintenance Tool.	10.3.3
10-3b	Attachments for the Apollo In-Flight Maintenance Tool.	10.3.3
10-4	Apollo T-Handle.	10.4.3
10-5a	Top View of the Apollo Torque Wrench.	10.5.3
10-5b	Bottom View of the Apollo Torque Wrench.	10.5.3
10-5c	Attachments for the Apollo Torque Wrench.	10.5.4
10-6	Boeing Torque Cancelling Tool.	10.6.3
10-7	Bolt Installation and Removal Tool.	10.7.3
10-8	Inertia Wheel.	10.8.3

Figure		Page
10-9	Motor/Handle Assembly.	10.9.3
10-10a	Nut and Bolt Wrench.	10.10.3
10-10b	Internal Socket Mechanism.	10.10.3
10-11	Open End Flat Ratchet Wrench.	10.11.3
10-12	Pliers-Wrench.	10.12.3
10-13	Power Impact Wrench.	10.13.3
10-14	Ratchet Hand Tool.	10.14.3
10-15	Screwdriver Ratchet Handle and Attachments.	10.15.3
10-16a	Space Power Tool with Handle Folded.	10.16.3
10-16b	Space Power Tool System.	10.16.3
10-16c	Components of the Barrel Assembly.	10.16.4
10-16d	Impactor Barrel Completing an Impacting Cycle.	10.16.4
10-17a	Space Tool Mitten (Prototype B).	10.17.3
10-17b	Space Tool Mitten (Prototype A).	10.17.3
10-17c	Space Tool Mitten (Breadboard - Space Mitten).	10.17.4
10-17d	Space Tool Mitten (Breadboard - Tool Mitten).	10.17.4
10-18a	Front View of the Spin Torque Space Tool.	10.18.3
10-18b	Rear View of the Spin Torque Space Tool.	10.18.3
10-19	Spiral Drive Screwdriver.	10.19.3
10-20	T-Handle Multi-Functional Tool.	10.20.3
10-21	Zero Reaction Space Wrench.	10.21.3
11-1	Semi-Remote Spunfit Wrench.	11.1.3
11-2	Spunfit Wrench.	11.2.3
11-3a	Tube Swaging Device.	11.3.3

Figure		Page
11-3b	Modified Cut-Off Tool.	11.3.3
11-3c	Cutaway of Tube Fitting.	11.3.4
12-1	Hand-Held Electron Beam Welder.	12.1.3
12-2a	Linear Materials Joining Tool.	12.2.3
12-2b	Annular Materials Joining Tool.	12.2.3
12-3	Plasma Electron Beam Welder.	12.3.3
12-4	Portable Electron Beam Welder (0.5KW)	12.4.3
12-5	Westinghouse Electron Beam Welder.	12.5.3

INTRODUCTION

Until now there was no single source from which one could obtain information on the state-of-the-art of EVA and IVA maintenance equipment and tools. Further, the difficulty in locating space tool information is compounded by the non-descript exotic names and acronyms given to particular tools (e.g., PLENCH, BIRT, NAB, FLYBALL). This catalog, therefore, is an attempt to culminate all available EVA space tool data into a single source, from which the users will be able to retrieve needed space tool data.

This single space tool information source will serve a very useful function by providing:

(1) a quick source of information for design, maintainability and reliability engineers and system planners,

(2) a method for updating tool information on breadboard and prototype tool developments,

(3) a process for introducing new tools and maintenance equipment as they are developed.

For this effort, it was necessary to locate the source, determine the status, and the functional and operational performance of the space maintenance/assembly tools and their associated equipment. This investigation was limited to those tools and pieces of maintenance equipment designed especially for EVA and IVA operations.

Properties of Space Tools and Maintenance Equipment

Selection of space tools and maintenance equipment for this cataloging effort was limited by the following constraints:

(1) the tool allows the space maintenance operator an advantage in repairing, servicing and inspecting possible maintenance or assembly tasks over performing the work without the space tool;

(2) the tool does not serve primarily as a transportation, positioning or remote manipulation device;

(3) the tool operation is on a real-time basis and not remotely controlled.

For this catalog, space maintenance support equipment has the quality of being an auxillary component to space tools as follows:

(1) the maintenance support equipment can be used with a space tool to allow for more versatility (for example, a socket for a power wrench);

(2) maintenance support equipment can be used to store, repair and inspect other tools;

(3) maintenance support equipment can permit the operator a greater mechanical advantage over his work task. This third category includes selected support equipment such as tethers and restraint devices that have as a major function, holding the operator in place for space maintenance tasks.

The major objective of this Space Equipment and Tool Catalog is to present certain descriptive, performance and interface data on tools designed especially for EVA and IVA use. Descriptive data include the basic length, diameter, weight, and either a photograph or drawing. Tool performance data will be augmented as more equipment and space tools are flight tested during the 1970's. Interface data include support requirements such as power source and support equipment.

The space tool data will be developed for computer file in order to facilitate keeping the data current and as an added data source for designers, researchers, planners, and others who might wish to have these data retrievable by computer.

Sources of Information

Formal literature searches were made by the National Aeronautics and Space Administration's Scientific and Technical Information Facility, the Defense Documentation Center and the Clearinghouse for Federal Scientific and Technical Information. In addition, an extensive literature search was made of the National Aeronautics and Space Administration's Scientific and Technical Aerospace Reports (STAR) abstracts, and the International Aerospace Abstracts. Indexes, abstracts and periodicals in public libraries were reviewed (for example, Applied Science and Technology Index, The Engineering Index, Aviation Week and Space Technology).

Another source of information was the NASA Technology Utilization Offices at various NASA research centers. In addition, a survey was conducted on space tools and related equipment at the United States Patent Office in Alexandria, Virginia. A large share of tool information also came from documents accumulated over the years at Raff Associates.

Space Tool and Maintenance Support Equipment Data

This catalog effort is basically a summary of space tool and support equipment data with photographs or line drawings of each space tool and support equipment.

Because of the updating process, the catalog will never be complete. Updating may take place because of the following:

(1) a particular tool system undergoing development will be updated continuously as the specifications and performance characteristics change;

(2) though a tool may have been discontinued by a developer some years earlier, another developer may want to develop the tool further;

(3) new tools are always being developed.

The basic criterion for including space tool or maintenance equipment data in the catalog was that the device must have reached a breadboard level of development.

The lack of detailed information on a space tool will be due to one or more of the following:

(1) proprietory information and not available for public release;

(2) unavailability of information; where there is insufficient detail, or the material has not been received for the catalog effort;

(3) no tool evaluation; evaluation of a tool was not documented or the evaluation was strictly qualitative;

(4) not applicable; data that are not relevant to a particular space tool or piece of maintenance equipment.

Catalog Format

Each space tool, piece of maintenance support equipment and tool kit is listed in a particular functional area. Each functional area represents the major task that each device is likely to perform. Cross-references are made for devices having multiple functions.

For each tool, the available data for inclusion in the "Space Equipment and Tool Catalog" will be arranged as follows:

A. Purpose - This section describes the function that the tool performs for a space maintenance task. It may also give an example of specific operational or simulated tasks that the tool has performed.

B. Previous Solutions - This section pertains to earlier developments, tools and methods that were used to perform a particular task.

C. Current Method of Operation - This section describes the functional relationship of the basic tool components, the method of tool operation, and the energy source (when data are available) that is necessary to operate the tool.

D. Related Functional Categories - In this section, tools with related functions will be identified by section number. (Note that Appendix B contains a cross referencing of this information.)

E. Performance - In this section evaluations by the developers, tool performance ratings, functions that the tool can perform, and required operational worksite conditions are described. Usually specific operational or simulated task data are included in this section.

F. Advantages and Disadvantages - This section reports the advantages and disadvantages of the tools as described in the reference materials. No attempt was made to evaluate the tool information nor to include a representative sample of advantages and disadvantages.

G. Status - This section gives an overview of the stages of tool development from the breadboard model to the operational model with specific development dates.

The projected date is an estimation of when the device will have achieved a particular stage in development.

The actual date is the time the developer had the device at a particular stage in development.

The posted date is when the tool data were prepared for the catalog.

The developer identifies the individual(s) and/or organization that had the prime responsibility for the engineering design and development of the space tool or piece of maintenance equipment.

The manufacturer is the organization that fabricates the tool, but may not have been involved in the primary design and/or development of the tool.

The sponsor is either the government agency or the company that funded the tool development.

H. Specifications - In this section, the basic dimensions of the tool (length, diameter, weight, etc.) are referenced to the accompanying illustration.

I. Support Equipment - This section identifies the power source requirements and tool accessories that are associated with the specific tool or piece of maintenance equipment.

J. For More Information Refer To - This section refers the user of the catalog to a reference listing (by number) that can be used for locating more detailed information about the specific tool.

Appendices

The Appendices describe the catalog in greater detail, and facilitate the reader's search for additional information about the catalog.

Appendix A, Tool/Bibliographic Key, identifies the prime bibliographic references that were used as background material for the tool data entries.

Appendix B, Space Equipment and Tool Matrix: Related Functional Categories and Source of Power, provides a rapid summary of tools and equipment with the potential for utilization in other functional areas. In addition, it provides a summary of the source of the tool's power.

Appendix C, Key Individuals in Space Tool and Maintenance Operations, presents a listing of individuals who have been involved in the development of a particular space tool, individuals who have been technical monitors, and technical managers of specific space tool programs.

Appendix D, Index and Literature Search, presents a listing of periodicals, library abstracts and indexes used to locate information on space tools and maintenance equipment.

Appendix E, Space Equipment and Tools Not Included in the Catalog (1969), lists those tools that were not included for the following reasons: (1) they had not reached a breadboard level of development during the preparation of the catalog, (2) they were not clearly space-related or (3) no information was received for data extraction.

Appendix F, Acronyms and Abbreviations, presents those contractions and word equivalents of units of measurement, tool names and functional categories that have been shortened either through popular use or because of space limitations in the catalog.

Appendix G, Forms for Updating Tool Entries and for the Submission of New Tool Data, allows the user of the catalog and current developers to either update or correct entries in the catalog by the use of Form A. Form B can be used by developers who wish to submit a space tool or piece of maintenance equipment for consideration as an item in the catalog.

Caveat Emptor

The development of space tools is clearly in its infancy. Many of the tool concepts which appear promising to us now may seem foolish a few years from now. Similarly, many of the tool concepts which do not appear useful now may have been very attractive several years ago and possibly may again become attractive in the future as our knowledge and understanding of the problems of space tools and space maintenance increase.

SECTION 1

BONDING AND ELECTROADHESOR TOOLS AND MAINTENANCE EQUIPMENT

This section lists and describes bonding and electroadhesor tools.

Attachment techniques are important and must be developed for space fabrication, maintenance and translation tasks. Even with reactionless tools, space suited astronauts need restraints at a worksite, in order to perform work in a zero-gravity evnironment.

The development of electroadhesors and bonding tools has come a long way. They employ many different principles and have certain characteristics in common. These characteristics are:

(1) They can be used by themselves or in conjunction with booms or tethers.

(2) They provide a quick connect and disconnect capability and do not damage the integrity of the associated object.

(3) They can quickly and easily be applied almost anywhere on a space structure.

EXOTHERMIC SPACE BONDING SYSTEM

A. PURPOSE: The exothermic space bonding system was designed to provide quick connect and disconnect attachment points for EVA and IVA operations.

B. PREVIOUS SOLUTIONS: There have been no previous space validated adhesive systems.

C. CURRENT METHOD OF OPERATION: The tool system consists of four major units: (1) the pad applicator tool, (2) six pads, (3) six pad/preheater units and (4) a magazine. The magazine stores the pads and pad/preheater units and provides a mount for the applicator tool. When a point of attachment is to be made, a pad or pad/preheater unit is manually removed from the storage case and mounted on the end of the applicator tool. A pad/preheater unit (a pad with a preheater ring) is used when the adherend's initial temperature is below 200°F (366°K). The pad/preheater unit is pressed against the adherend and a current from a battery in the applicator handle ignites exothermic charges (Exotherms 116 and 17 in a 5:1 ratio by weight) in the pad and in the preheater ring. The charge in the preheater heats the adherend and the charge in the pad heats the adhesive on the pad face (Nylon/Epoxy Metlbond 400). When the adherend reaches the correct temperature, about 400°F (478°K), a low-melting alloy melts and allows a spring to lift the preheater away from the adherend. In a few seconds, the pad cools and a bond is formed. A stud on the back of the pad provides the attachment point. The applicator can then be used as a handhold or it can be quickly disconnected. When the initial temperature of the adherend is above 200°F (366°K), the charge in a pad without a preheater ring provides sufficient heat energy to form the bond.

D. RELATED FUNCTIONAL CATEGORIES: 7

E. PERFORMANCE: Breadboard models of the pad and the preheater ring were fabricated and laboratory tested in vacuum chambers. The pads held tensile loads of 123 lb (546 N) when the bonds were formed with initial aluminum adherend temperatures of -100°F (200°K) to 250°F (394°K). Shear loads were limited by the stud strength rather than the bond. Poor bonds were formed on 0.012 in. (0.031 cm) thick aluminum sheet due to overheating of the adhesive in the bond formation and deformation of the sheet which occurs under a tensile load. This deformation applied peel type loads to the bonds. The preheater rings were tested separately from the pads and were found to function satisfactorily.

F. ADVANTAGES AND DISADVANTAGES: Unavailable.

G. STATUS:

	Projected Date	Actual Date	Posted Date
Breadboard Model	1966	1966	1969

Developers:
Rodney A. Jones (Program Manager) and
Glenn H. Sievert (Senior Research Technician)
Narmco Research and Development Division
Whittaker Corporation
San Diego, California

Sponsor:
United States Air Force
Air Force Aero Propulsion Laboratory
Research and Technology Division
Air Force Systems Command
Wright-Patterson Air Force Base, Ohio 45433
Contract No. AF 33 (615) 2814

H. SPECIFICATIONS:

	Length	O.D.	Material
Magazine Large Tube	9.69 in. (24.6 cm)	3 in. (7.6 cm)	6061-T6 Aluminum
Magazine Small Tube	7.88 in. (20.0 cm)	1.5 in. (3.8 cm)	6061-T6
Applicator Barrel	10.25 in. (26.0 cm)	0.56 in. (1.4 cm)	Aluminum
Applicator Handle	4.75 in. (12.1 cm)	1.825 in. (4.64 cm)	Aluminum

	Height	O.D.	I.D.	Weight
Pad	1.25 in. (3.18 cm)	1.25 in. (3.18 cm)		0.16 oz (4.6 gm)
Preheater	0.75 in. (1.9 cm)	2.44 in. (6.2 cm)	1.44 in. (3.7 cm)	

I. SUPPORT EQUIPMENT:

Power Source: A sealed nickel cadmium 6 V cell is located in the applicator handle.

Accessories: None.

J. FOR MORE INFORMATION REFER TO:

Bibliography: 39, 48

Tool Reference: None.

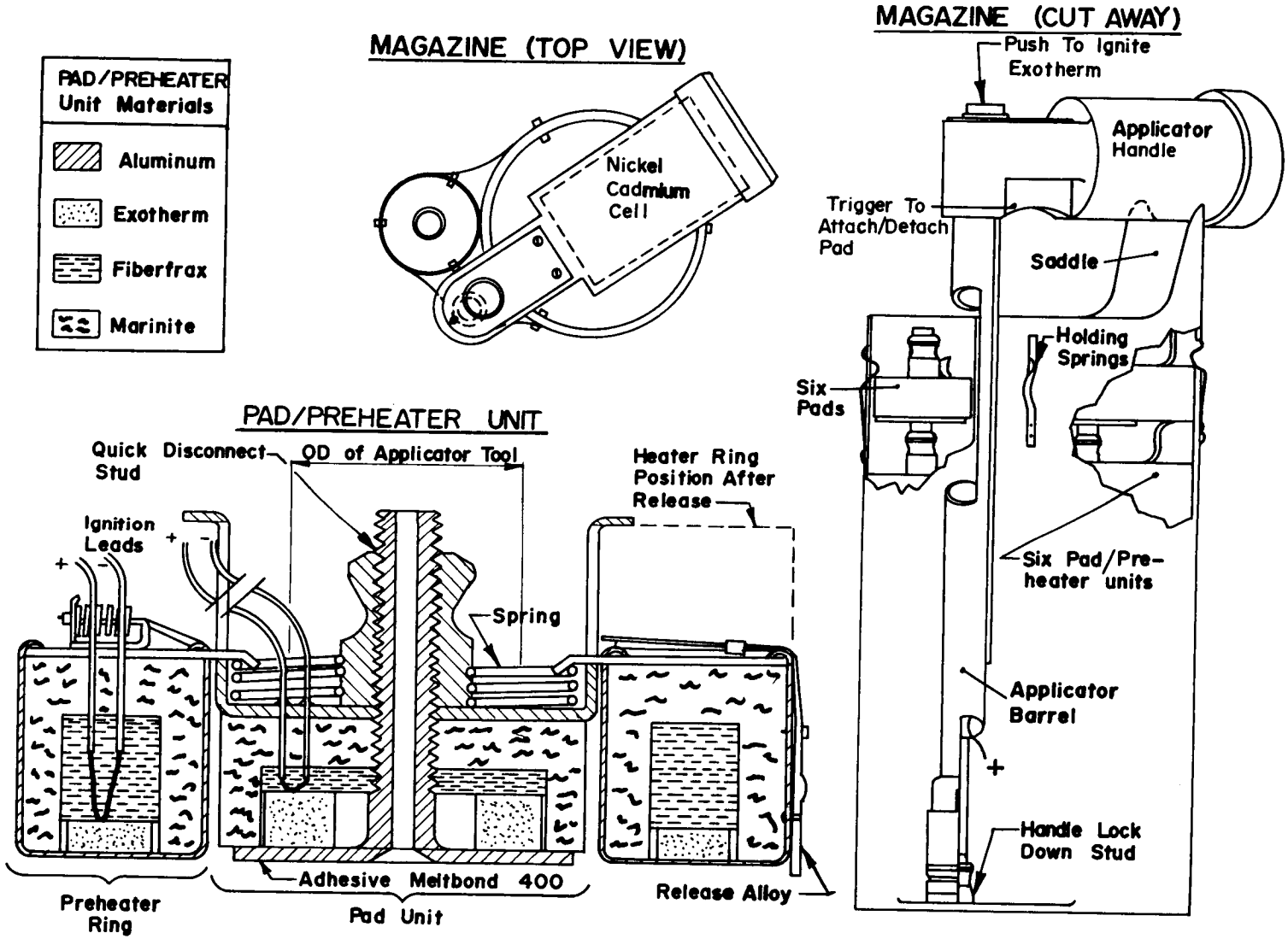

Figure 1-1. Exothermic Space Bonding System. Drawings taken from Bibliography reference No. 48.

EXTRAVEHICULAR SPACE ADHESIVE SYSTEM

A. PURPOSE: The extravehicular space adhesive system was designed to emplace an adhesive pad on a space vehicle and to anchor an astronaut's harness to the pad for astronaut stabilization during EVA maintenance or repair missions.

B. PREVIOUS SOLUTIONS: There have been no previous space validated adhesive systems.

C. CURRENT METHOD OF OPERATION: This system consists of six adhesive pads stored in a dispenser. The pads are loaded through a screw cap, where the dispenser can be attached to the telescoping leg of an astronaut's attachment harness. The pads are positioned by a key and stacked on top of each other and are aligned for acceptance by an indexing adhesive pad feed mechanism. When the handle of the indexing ring is moved to the left side, an adhesive pad is fed by a spring into the indexing ring. Movement of the handle to the loaded position allows the adhesive pad to be applied to the adherend. A manually applied force of 3.45 lb (15.4 N) for 15 seconds on the pad ruptures the adhesive capsules on the face of the pad and a bond is formed. To release the pad from the dispenser, the indexing handle is rotated to the right side of the handle travel and the applicator can be pulled free. Each adhesive pad is a hollow aluminum cylinder which is open at one end and at the other end has a flat face and a 5/32 in. (0.397 cm) offset on the outside. These features allow the pads to be stacked without rupturing the adhesive capsules attached to their faces. Three key ways along the length of each pad permit the pads to be guided by keys in the pad dispenser. A 5/16 in. (0.794 cm) diameter hole is located in the center of the face and a 0.060 in. (0.155 cm) layer of nutrile rubber is bonded to the face and covers the hole. Polypropylene capsules of Eastman "910" adhesive and gelatine capsules of dimethyl-P-toluidine are bonded to the exposed side of the rubber layer just over the hole. When the pad face is pressed against a surface, the capsules are ruptured, the previously encapsulated chemicals mix and the pad is bonded to the adherend. Meanwhile, the residue capsule material and the rubber layer immediately behind it is pressed back into the hole in the face. Thus, the residue material is removed from the glue line and does not interfere with the bond.

D. RELATED FUNCTIONAL CATEGORIES: 7

E. PERFORMANCE: Laboratory tests indicate that the adhesive pads will bond to an aluminum substrate in 10 to 30 seconds and will withstand tensile loads in excess of 69 lb (307 N) over a test range from 0°F to 250°F (255°K to 394°K). The adhesive pad can be activated with a force from 2 to 5 lb (8.9 N to 22.3 N). The adhesive capsules are stable in a vacuum of 10^{-6} torr (1.3×10^{-4} N/m^2) and the pads effectively bond at that pressure.

F. ADVANTAGES AND DISADVANTAGES: The encapsulated adhesives will store for only a limited time under earth conditions. They age least at 40°F (277°K) in low humidity.

G. STATUS:

	Projected Date	Actual Date	Posted Date
Prototype Model	1966	1966	1969

Developers:
G. Peters (Project Leader), J. Whitaker, J. Hanny,
R. Shafer (former Project Leader)
The National Cash Register Company
Dayton, Ohio

Sponsor:
United States Air Force
Air Force Aero Propulsion Laboratory
Research and Technology Division
Air Force Systems Command
Wright-Patterson Air Force Base, Ohio
Contract No. AF 33(615) - 2693

H. SPECIFICATIONS:

	Length	Diameter	Bond Area	Material
Dispenser	4.56 in. (11.6 cm)	1.5 in. (3.8 cm)	. . . .	Cold Rolled Steel
Pad	0.5 in. (1.27 cm)	1.12 in. (2.84 cm)	0.69 $in.^2$ (4.45 cm^2)	Aluminum

I. SUPPORT EQUIPMENT:

Power Source: This is a manually operated tool.

Accessories: This system is designed for use with an astronaut's harness (e.g. the astronaut boom attachment system).

J. FOR MORE INFORMATION REFER TO:

Bibliography: 57, 58, 59

Tool Reference: Astronaut boom attachment system.

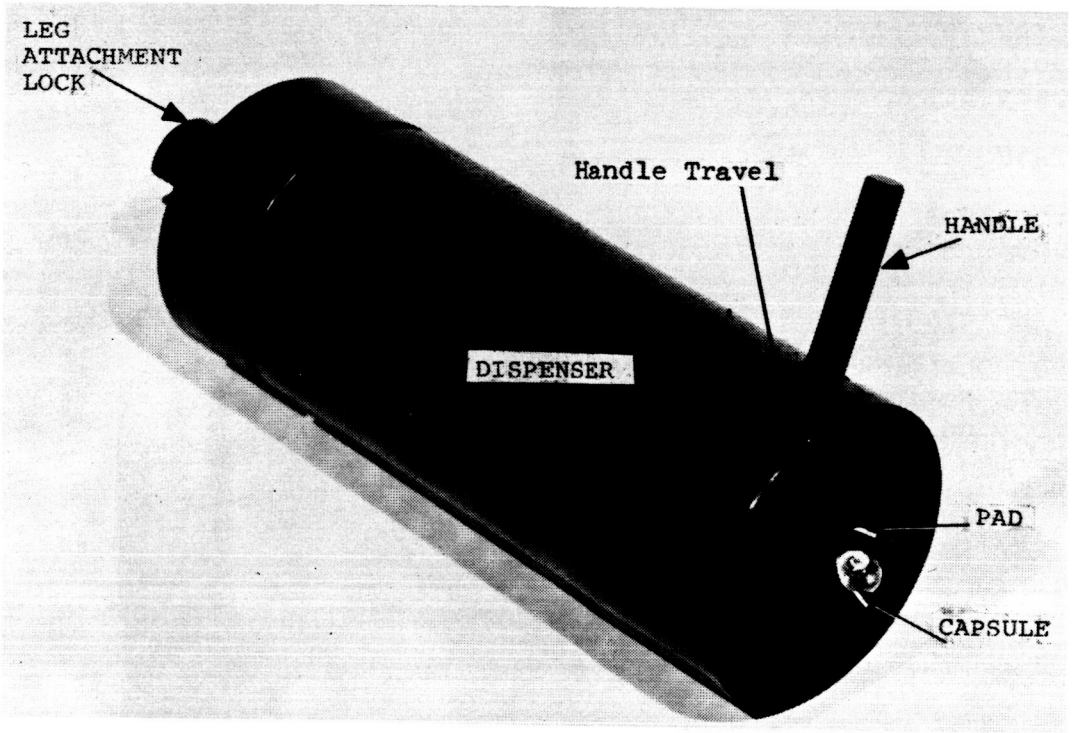

Figure 1-2a. Extravehicular Space Adhesive System, Assembled. Photograph provided by the National Cash Register Company.

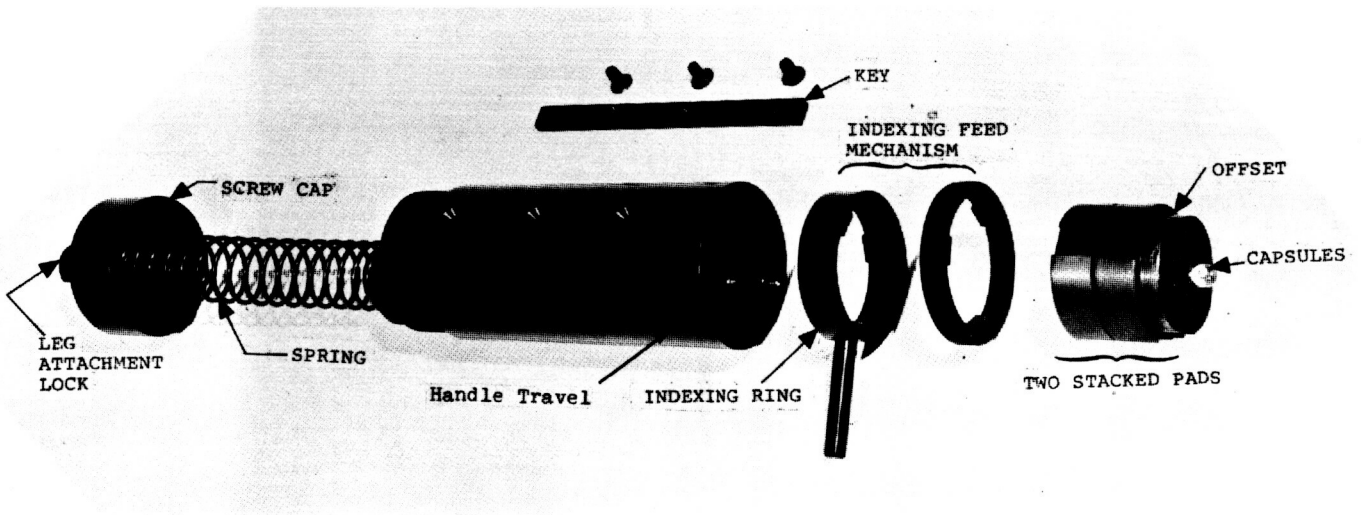

Figure 1-2b. Extravehicular Space Adhesive System, Disassembled. Photograph provided by the National Cash Register Company.

FLEXIBLE PROTOTYPE (SINGLE-POLE) ELECTROADHESOR

A. PURPOSE: The flexible prototype (single-pole) electroadhesor was developed to examine the feasibility of using the electroadhesive principle for a remotely powered and controlled, quick connect and disconnect attachment device for IVA and EVA operations.

B. PREVIOUS SOLUTIONS: There have been no previous space validated flexible electroadhesors.

C. CURRENT METHOD OF OPERATION: The face of this adhesor is a single, flexible, insulated electrode. The face is pressed against the adherend (e.g. a space vehicle's skin) and the power supply is turned on. In a few seconds, opposite charges build up on the electrode and the adherend (the latter is used as a ground for the power supply). The attractive forces between these charges form a bond. The high voltage required for the process is provided by a battery whose voltage has been stepped up by a dc to dc converter. In the steady state condition, a small electrical current flows between the electrodes and the adherend. Thus, when the power switch is turned off, the charges begin to drain off. After several seconds, a slight bending or peeling force will remove the adhesor and the adhesor is ready for reuse.

The power supply is contained in a small cylinder separate from the adhesor. Current is supplied to the adhesor through a pair of wires. This system permits remote operation of the adhesor.

D. RELATED FUNCTIONAL CATEGORIES: 7

E. PERFORMANCE: Laboratory tests have shown that the adhesor will withstand the following static loads: Tensile - 2 lb (8.9 N) Shear - 1 lb (4.45 N). The small mercury battery lasted 40 hours.

F. ADVANTAGES AND DISADVANTAGES: This adhesive tool can be used over and over again as long as its batteries last and it is designed to adhere better than the hand model prototype (single-pole) and the hand model (two-pole) electroadhesors to curved surfaces. The flexible prototype has the additional capacity of remote control. In order for the flexible prototype to attach, the adherend must be smooth and clean and must be able to conduct electricity. The flexible prototype does not resist bending or peeling forces very well.

G. STATUS:

	Projected Date	Actual Date	Posted Date
Breadboard Model	1968	1968	1969

Developer:
R. P. Krape
Chrysler Corporation Space Division
New Orleans, Louisiana

Sponsor:
National Aeronautics and Space Administration
Langley Research Center
Langley Station
Hampton, Virginia 23365
Contract No. NAS 1-7303

H. SPECIFICATIONS: The battery (Mallory TR-126T2) and dc to dc converter form a power pack separate from the adhesor envelope.

Length	1 in. (2.54 cm)
Diameter	4 in. (10.16 cm)
Battery voltage	8.4 V
Supply voltage	1850 V
Supply current	30 μA
Theoretical battery life	30-40 hr

I. SUPPORT EQUIPMENT:

Power Source: The power source is an integral part of the tool. See Specifications Section.

Accessories: None.

J. FOR MORE INFORMATION REFER TO:

Bibliography: 68

Tool Reference: Hand model prototype (single-pole) electroadhesor, hand model prototype (two-pole) electroadhesor.

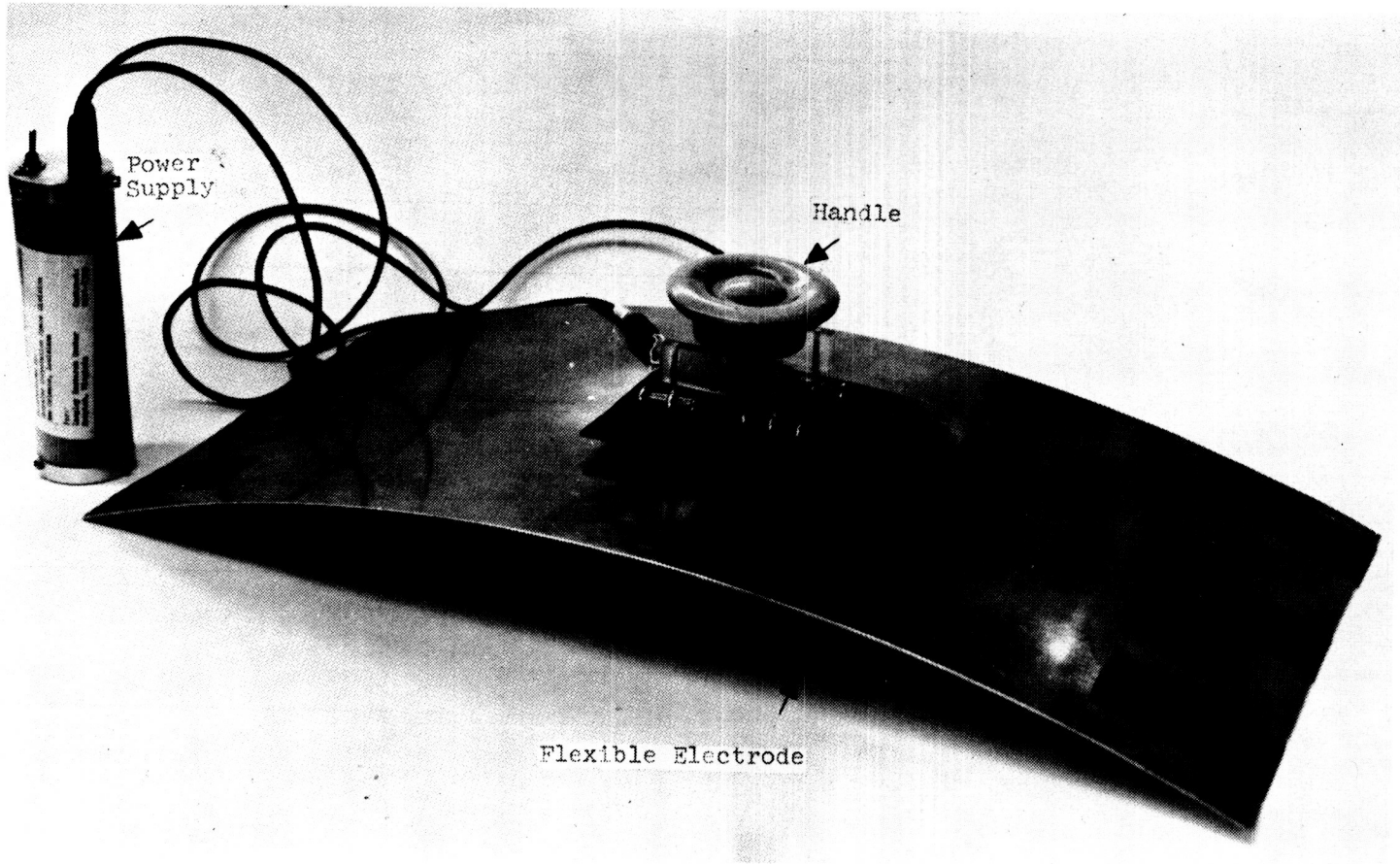

Figure 1-3. Flexible Prototype (Single-Pole) Electroadhesor.
Photograph provided by Chrysler Corporation, Space Division.

HAND MODEL PROTOTYPE (SINGLE-POLE) ELECTROADHESOR

A. PURPOSE: This prototype electroadhesor was developed to examine the feasibility of using the electroadhesive principle for quick connect and disconnect attachment points for IVA and EVA operation.

B. PREVIOUS SOLUTIONS: There have been no previous space validated single-pole electroadhesor systems.

C. CURRENT METHOD OF OPERATION: The face of this adhesor is a single, insulated electrode. When the electrode is pressed against the adherend (e.g. a space vehicle's skin) and the power supply is turned on, opposite charges build up on the electrode and the adherend (the latter is used as a ground for the power supply). The attractive forces between these charges form a bond. The high voltage required for the process is provided by a mercury battery whose voltage has been stepped up by a dc to dc converter. In the steady state condition, current leakage occurs between the electrodes and the adherend. Thus, when the power switch is turned off, the charges begin to drain off. After several seconds, a slight bending force will remove the adhesor and the adhesor is ready for reuse.

D. RELATED FUNCTIONAL CATEGORIES: 7

E. PERFORMANCE: Laboratory tests have shown that the adhesor will withstand the following static loads: Tensile - 6 lb (26 N), Shear - 40 lb (178 N). A small mercury battery (Mallory TR-126T2) lasted 42 hours.

F. ADVANTAGES AND DISADVANTAGES: This adhesive tool can be used over and over again as long as its batteries last. However, it does not attach very well to a surface that is not smooth, clean and flat, and does not resist bending or peeling forces very well. A conducting surface is required.

G. STATUS:

	Projected Date	Actual Date	Posted Date
Breadboard Model	1968	1968	1969

Developer:
R. P. Krape
Chrysler Corporation Space Division
New Orleans, Louisiana

Sponsor:
National Aeronautics and Space Administration
Langley Research Center
Langley Station
Hampton, Virginia 23365
Contract No. NAS 1-7303

H. SPECIFICATIONS: The battery and dc to dc converter are located within the envelope of the electroadhesor. The battery is a Mallory TR-126T2.

Battery voltage	8.4 V
Supply voltage	1850 V
Supply current	30 uA
Theoretical battery life	30-40 hr

I. SUPPORT EQUIPMENT:

Power Source: The power supply is an integral part of the tool. See Specifications Section.

Accessories: None.

J. FOR MORE INFORMATION REFER TO:

Bibliography: 68

Tool Reference: Flexible prototype (single-pole) electroadhesor, hand model prototype (two-pole) electroadhesor.

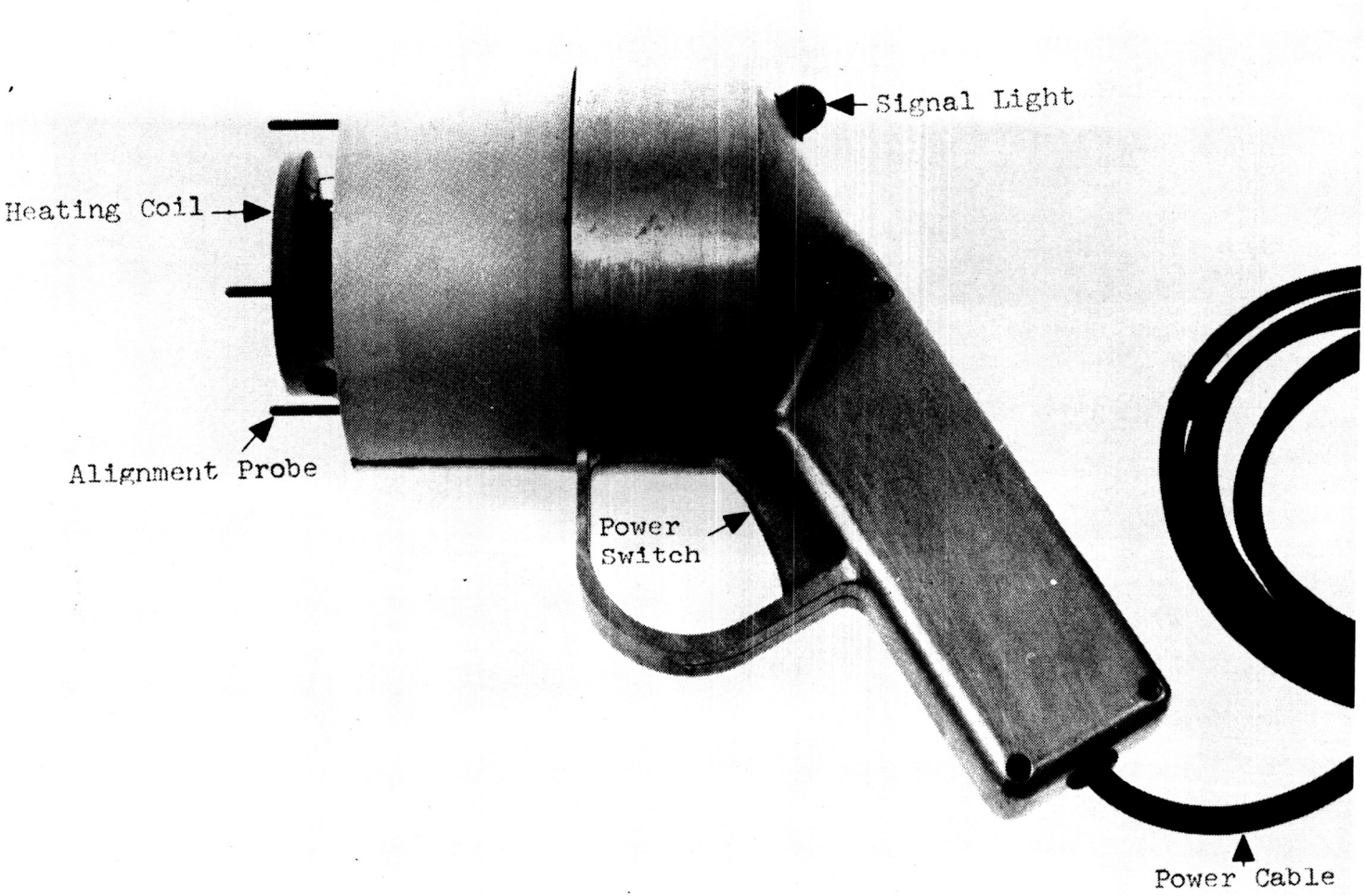

Figure 1-4. Hand Model Prototype (Single-Pole) Electroadhesor. Photograph provided by Chrysler Corporation, Space Division.

HAND MODEL PROTOTYPE (TWO-POLE) ELECTROADHESOR

A. PURPOSE: This prototype electroadhesor was developed to examine the feasibility of using the electroadhesive principle for connect and disconnect attachment points for IVA and EVA operations.

B. PREVIOUS SOLUTIONS: There have been no previous space validated two-pole electroadhesor hand model systems.

C. CURRENT METHOD OF OPERATION: The adhesor is pressed against a clean, smooth, flat surface, the adherend. The face of the adhesor consists of two electrodes insulated from the adherend by a dielectric. When power is turned on, a high charge density is created within the electrodes which causes the formation of image charges (of opposite polarity) on the surface of the adhering material. The attractive forces between these charges effect the bond. The high voltage required for this process is provided by a mercury battery whose potential has been stepped up by a dc to dc converter. In the steady state, current leakage occurs between the electrodes and the adherend; thus, when the power is turned off the charges begin to dissipate. After several seconds a slight bending force will remove the adhesor and it is ready for reuse.

D. RELATED FUNCTIONAL CATEGORIES: 7

E. PERFORMANCE: Laboratory tests have shown that the adhesor will withstand these static forces with an applied potential of 1850 volts: Tensile - 3 lb (13.4 N), Shear 18 lb (80.1 N). The small mercury battery lasted 27 hours.

F. ADVANTAGES AND DISADVANTAGES: This adhesive tool can be used over and over again as long as its batteries last. However, it does not attach very well to a surface that is not smooth, clean, and flat, and does not resist bending or peeling forces very well. A conducting surface is required.

G. STATUS:

	Projected Date	Actual Date	Posted Date
Prototype Model	1968	1968	1969

Developer:
R. P. Krape
Chrysler Corporation Space Division
New Orleans, Louisiana

Sponsor:
National Aeronautics and Space Administration
Langley Research Center
Langely Station
Hampton, Virginia 23365
Contract No. NAS 1-7303

H. SPECIFICATIONS: The battery and dc to dc converter are located within the envelope of the electroadhesor. The battery is a Mallory TR-126T2.

Battery voltage	8.4 V
Supply voltage	1850 V
Supply current	30 μA
Theoretical battery life	30-40 hr

I. SUPPORT EQUIPMENT:

Power Source: The power supply is an integral part of the tool. See Specifications Section.

Accessories: None.

J. FOR MORE INFORMATION REFER TO:

Bibliography: 68

Tool Reference: Flexible prototype (single-pole) electroadhesor, hand model prototype (single-pole) electroadhesor.

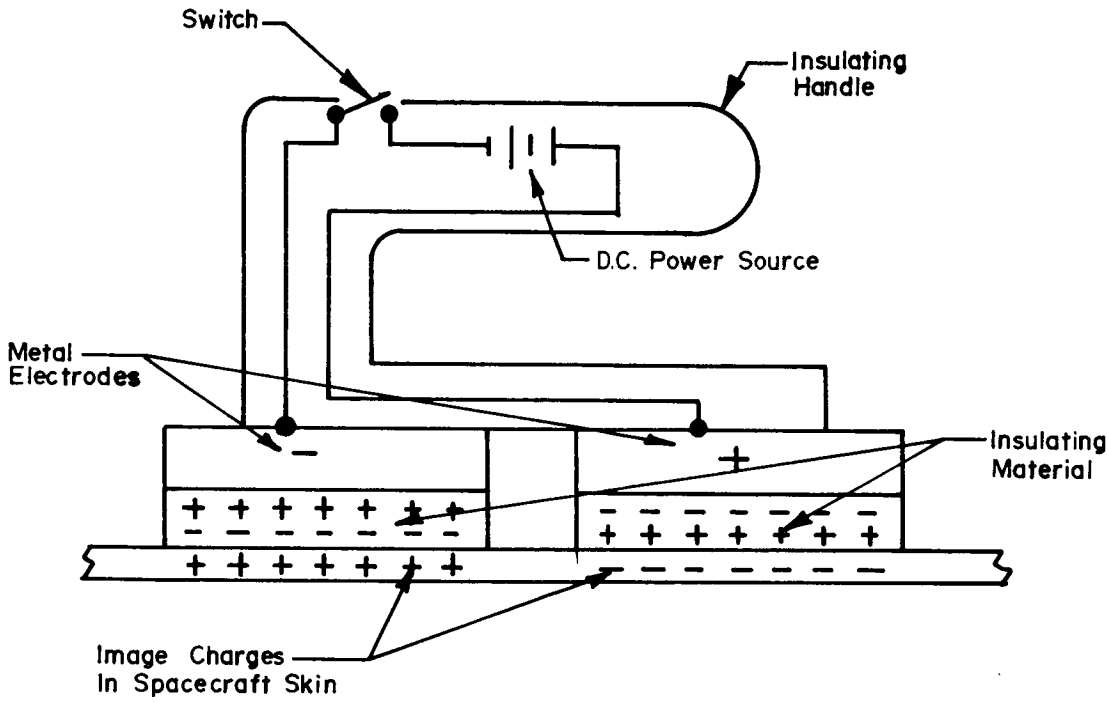

Figure 1-5. Hand Model Prototype (Two-Pole) Electroadhesor Principles of Operation Drawing. Drawing taken from Bibliography reference No. 68.

RESTRAINT BUTTONS AND APPLICATOR

A. PURPOSE: The restraint buttons and applicator system was designed to emplace adhesive buttons on space vehicles for providing attachment points for tethers. This system was initially designed to restrain the Martin space tool kit case and stabilize astronauts during EVA maintenance or repair missions.

B. PREVIOUS SOLUTIONS: There have been no previous space validated adhesive systems.

C. CURRENT METHOD OF OPERATION: This system is an integral part of the Martin space tool kit. Each of its seven parts has its own pocket in the tool kit case and functions as follows: (1) The restraint buttons are aluminum disks with swivel eyelets for attaching a tether. A wire grid of No. 32 copper wire is embedded in a thin layer of FM-98 epoxy film on the face of each disk. An electric current through this grid heats the epoxy to a bonding temperature. (2) The screwdriver ratchet handle, generally used as a handle for screwdriver bits, serves as a handle for the applicator. (3) The button holder unit that holds the restraint button also provides an electrical contact for the restraint button. The unit contains a thermocouple that extends through a hole in the restraint button and measures the bonding temperature. (4) The application control unit holds an indicator that signals when a bonding temperature of 450°F (504°K) is reached. The thermocouple circuits and a pressure probe allows a controlled impulse to seat the button as the epoxy softens. (5) An electric plug fits into an electric socket in the tool kit case and draws power from a battery in the center of the case through the electronics package. (6) The electronics package contains the monitoring circuits for the applicator and is permanently located in the tool kit case near the battery. (7) Two cables carry current to and from the various parts of the system.

Application of the system requires the operator to remove a restraint button and assemble the various parts of the applicator from the case. Next, the operator presses a restraint button against the adherend and actuates the power switch until the signal light indicates a bonding temperature. Some slack in the cable between the control unit and the holder unit allows the units to separate and the operator to drift away in reaction to the force applied to the button to prevent pulling on the button before a good bond is formed.

D. RELATED FUNCTIONAL CATEGORIES: 7

E. PERFORMANCE: Laboratory tests have shown that the buttons will withstand loads greater than 50 lb (223 N) when a bonding temperature of 450°F (504°K) was reached. Eleven to 90 seconds were required to reach the bonding temperature in tests using various thicknesses of aluminum sheet varying from 0.016 in. (0.041 cm) to 0.100 in. (0.254 cm) and various initial temperatures from -160°F (166°K) to 70°F (294°K).

F. ADVANTAGES AND DISADVANTAGES: A suited operator is likely to have difficulty assembling the various parts. The long cables are likely to interfere with the operator.

G. STATUS:

	Projected Date	Actual Date	Posted Date
Prototype Model	1965	1965	1969

Developers:
Allen E. Holmes and A. L. Hamilton
Martin Company, Baltimore Division
Baltimore, Maryland 21203

Sponsor:
National Aeronautics and Space Administration
Manned Spacecraft Center
Houston, Texas 77058
Contract No.. NAS 9-3161

H. SPECIFICATIONS:

	Length	Width	Height	Weight
Screwdriver Handle	7.0 in. (18 cm)	3.0 in. (7.6 cm)	8.0 in. (20 cm)	0.75 lb (0.34 kg)
Control and Holder Units Coupled	3.7 in. (9.4 cm)	1.3 in. (3.3 cm)	2.8 in. (7.1 cm)	0.75 lb (0.34 kg)
Cables	3 ft (0.92 m)			

Restraint Button

Diameter	1.13 in. (2.87 cm)
Height (with eyelet)	0.5 in. (1.27 cm)
Thickness	.0.03 in. (0.08 cm)
Weight	0.063 lb (0.028 kg)
Power requirement	8-10 A, 10-12 V
Material	Aluminum

I. SUPPORT EQUIPMENT:

Power Source: A 12 V, Yardley HR-15 silver-zinc battery is located in the Martin space tool kit case.

Accessories: This tool is stored in the Martin space tool kit case.

J. FOR MORE INFORMATION REFER TO:

Bibliography: **17, 40, 41, 42, 71**

Tool Reference: Martin space tool kit, Martin space tool kit case, screwdriver ratchet handle.

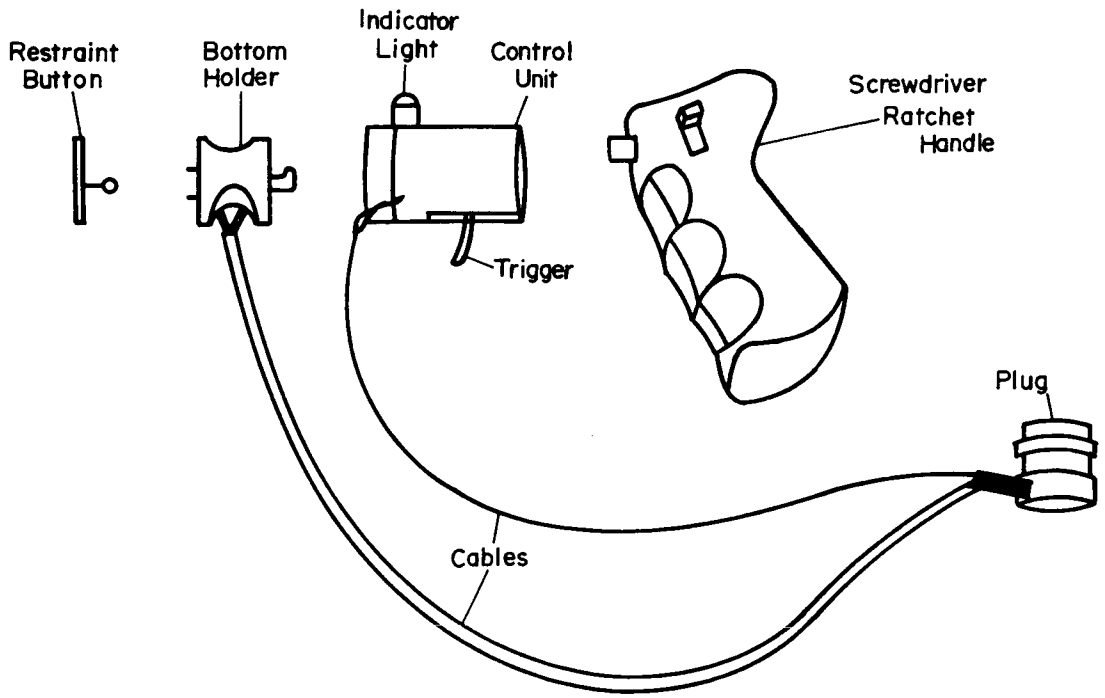

Figure 1-6a. Restraint Buttons and Applicator. Drawing taken from Bibliography reference No. 41.

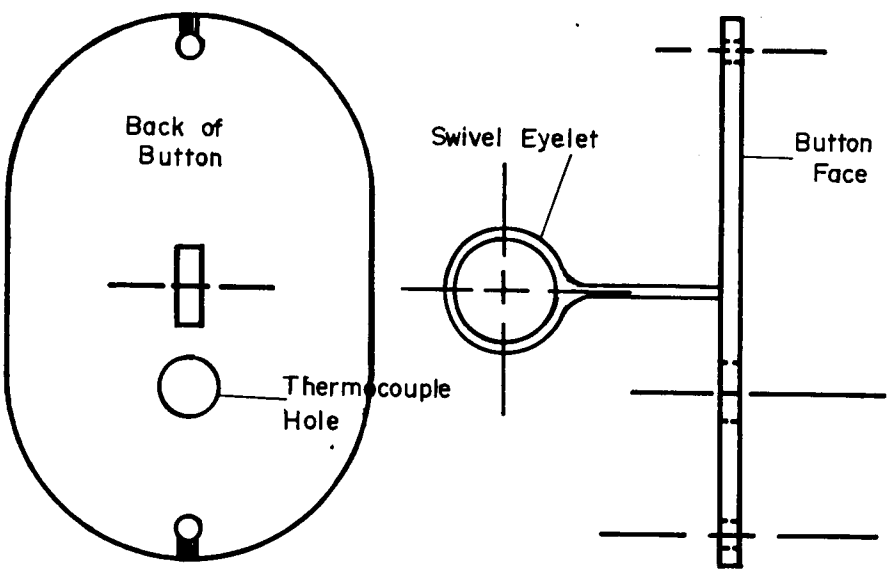

Figure 1-6b. Restraint Buttons. Drawings taken from Bibliography reference No. 41.

STUD BONDING TOOL

A. PURPOSE: The stud bonding tool was developed to bond a stud and swivel assembly, using a thermoplastic adhesive to either metal or plastic, internal or external to the vehicle, and in atmosphere or vacuum. The studs and swivel assembly, bonded in place, provide an attachment point with quick disconnect capability. The swivel can also be removed to mount equipment directly on the stud.

B. PREVIOUS SOLUTIONS: There have been no previous space validated adhesive systems.

C. CURRENT METHOD OF OPERATION: The stud bonding tool is designed to be hand held and to use an external, direct current power supply. A heating element heats the stud, which is retained in the tool by means of the swivel, to as much as 707°F (648°K) in 30 seconds. When the right temperature is reached, an adjustable sensing unit signals that the stud is sufficiently heated. The temperature is maintained until the stud is released for application. However, the stud cannot be released until an integral alignment system has assured that the stud will be applied perpendicular to the surface to be bonded. When released, a spring snaps the swivel guided stud against the adherend, where, a thermoplastic adhesive forms a bond, providing a load point capable of holding 500 lb (227 kg) perpendicular to the bond line at room temperature.

D. RELATED FUNCTIONAL CATEGORIES: 7

E. PERFORMANCE: Unavailable.

F. ADVANTAGES AND DISADVANTAGES: Unavailable.

G. STATUS:

	Projected Date	Actual Date	Posted Date
Breadboard Model	1968	1968	1969

Developers:
William G. Simpson and B. K. Davis
National Aeronautics and Space Administration
Marshall Space Flight Center
Huntsville, Alabama 35812

Sponsor:
National Aeronautics and Space Administration
Marshall Space Flight Center
Huntsville, Alabama 35812

H. SPECIFICATIONS:

Total weight. . . . . 2.5 lb (1.14 kg)
Power requirements. . . . . 28 V, 1 kW

I. SUPPORT EQUIPMENT:

Power Source: An external power source is necessary (28 V, 1 kW).

Accessories: None.

J. FOR MORE INFORMATION REFER TO:

Bibliography: 15

Tool Reference: None.

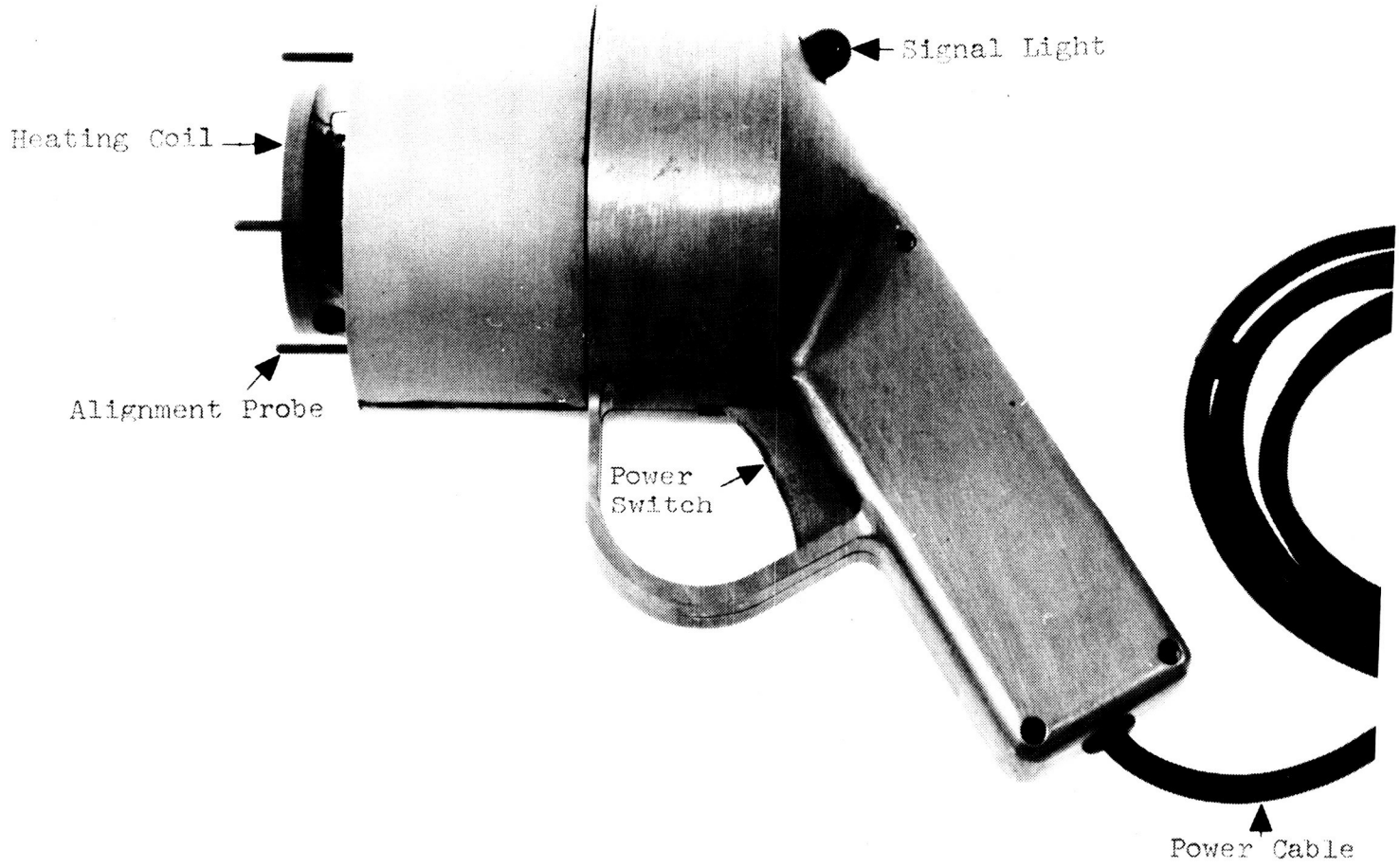

Figure 1-7. Stud Bonding Tool. Photograph provided by the Marshall Space Flight Center.

SECTION 2

CUTTING TOOLS

In-space maintenance and fabrication will require various types of cutting tools. Drills will be needed to cut holes for the emplacement of threaded fasteners. Hole saws will permit the emplacement of portholes and passage holes for pipes and cables. Powered shears may be used to cut cables, tubing or tethers. Powered saws are needed for on-the-spot cutting and fitting of metal sheets.

On the following pages, space tools that have been fabricated for these purposes will be presented.

POWER DRILL

A. PURPOSE: The power drill was designed to cut various size holes in thin metal sheets without requiring the astronaut to absorb reactive torque or to apply pressure on the cutting blade.

B. PREVIOUS SOLUTIONS: There have been no previous space validated drills or hole saws.

C. CURRENT METHOD OF OPERATION: The power drill is a hole saw that is part of the Martin space tool kit and is used as an attachment for the motor/handle assembly which provides an electric motor and a handle for the drill. After attachment to the motor/handle, the drill is run in reverse to cock a spring assembly inside the drill. When the needle, located at the center of the hole saw blade, is pressed against the workpiece so that the needle moves back 1/32 in. (0.079 cm), the spring assembly is released. The spring assembly accelerates a striker mass forward which drives the needle into the workpiece. Now, the drill is run forward. As the blade rotates, the needle slowly retracts and brings the hole saw blade into firm contact with the workpiece. All reactions on the hole saw blade are transmitted back through the needle to the workpiece. When the drilling operation is completed, the drill is stopped and removed from the workpiece. The drill is run in reverse to move the needle forward so that chips and the workpiece slug on the needle can be removed. As a safety precaution the tool is run forward to assure that the spring assembly is not cocked until needed.

D. RELATED FUNCTIONAL CATEGORIES: None

E. PERFORMANCE: The Martin Company reports that holes from 1/4 in. (0.635 cm) to 21/32 in. (1.67 cm) diameter have been drilled in 0.040 in. (0.10 cm) 7075-T6 aluminum and 028 6-4 titanium in less than 34 seconds. The only force required of the astronaut is an impulse of 0.5 lb-sec (2.23 N-sec) to initiate needle penetration.

F. ADVANTAGES AND DISADVANTAGES: Needle travel and thus the workpiece thickness is limited to 3/16 in. (0.476 cm).

G. STATUS:

	Projected Date	Actual Date	Posted Date
Prototype Model	1965	1965	1969

Developers:
Allen E. Holmes and A. L. Hamilton
Martin Company, Baltimore Division
Baltimore, Maryland 21203

Sponsor:
National Aeornautics and Space Administration
Manned Spacecraft Center
Houston, Texas 77058
Contract No. NAS 9-3161

H. SPECIFICATIONS:

Drill Unit:

Length	8.25 in.	(21.0 cm)
Diameter	3.25 in.	(8.26 cm)
Weight	3.5 lb	(1.6 kg)
Needle Diameter	0.125 in.	(0.318 cm)

I. SUPPORT EQUIPMENT:

Power Source: The motor/handle assembly provides the mechanical power to drive the power drill.

Accessories: several hole saws are used with the power drill. They have diameters of 1/4 in. (0.635 cm), 3/8 in. (0.953 cm), 1/2 in. (1.27 cm) and 21/32 in. (1.67 cm).

J. FOR MORE INFORMATION REFER TO:

Bibliography: 17, 40, 41, 42, 71

Tool Reference: Martin space tool kit, Martin space tool kit case, motor/handle assembly.

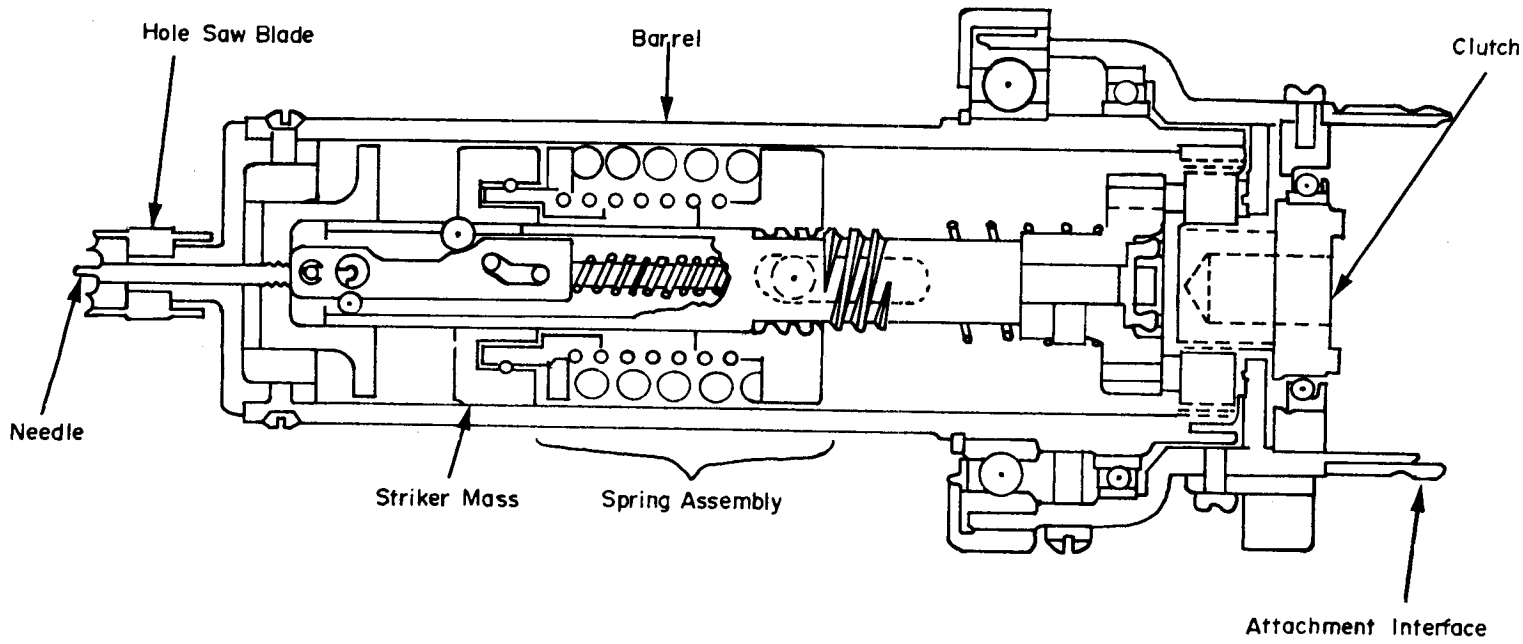

Figure 2-1. Power Drill. Drawing taken from Bibliography reference 41.

POWER SAW

A. PURPOSE: The power saw was designed to cut metal sheet without requiring the astronaut to apply any forces beyond that of holding the power switch on and guiding the cut.

B. PREVIOUS SOLUTIONS: There have been no previous space validated saws.

C. CURRENT METHOD OF OPERATION: The power saw is part of the Martin space tool kit and is used as an attachment for the motor/handle assembly which provides an electric motor and a handle for the saw. When an astronaut desires to cut a metal sheet, he begins by placing the saw on an edge of a 5/8 in. (1.59 cm) diameter precut hole.so that the shoe fits flush on the work surface and the hold down foot reaches under the sheet. The hold down foot is pulled up snug under the sheet and locked with the foot lever. A quarter turn on the cam lowers the drive wheels and squeezes the metal sheet between the hold down foot and the drive wheels. At this point, the astronaut can apply power for operating the saw.

Rotary motion in the motor/handle assembly is transmitted through a saw clutch, to a bevel gear and then to the blade drive crank. The drive crank sets the saw blade holder and blade in simple harmonic motion causing the blade to move over a 5/8 in. (1.59 cm) stroke. As it moves, guide pins and a saddle give the blade a slight rotation so that an epicyclic path is followed by the saw teeth moving them into the work as they cut. A single straight spring is actuated by the blade holder to rotate the wheel shaft back and forth. The wheels consist of two Torrington one-way needle clutches with knurled steel tires pressed on the outside. When the shaft turns one way the clutches engage and the wheels pull the blade into the work. When the shaft turns the other way, the clutches disengage and the wheels do not turn.

D. RELATED FUNCTIONAL CATEGORIES: None.

E. PERFORMANCE: The saw will cut, with no operator forces other than minor steering, at rates from 4 ft/min (2 cm/sec) in 0.016 in. (0.041 cm) 7075-T6 aluminum to 4 in./min (0.169 cm/sec) in 0.100 in. (0.254 cm) 7075-T6 aluminum.

F. ADVANTAGES AND DISADVANTAGES: The wheels tend to damage the material finish. The length of the saw caused some operator visual problems. The packaging of the saw attachment with the protruding blade is a safety hazard.

G. STATUS:

	Projected Date	Actual Date	Posted Date
Prototype Model	1965	1965	1969

Developers:
Allen E. Holmes and A. L. Hamilton
Martin Company, Baltimore Division
Baltimore, Maryland 21203

Sponsor:
National Aeronautics and Space Administration
Manned Spacecraft Center
Houston, Texas 77058
Contract No. NAS 9-3161

H. SPECIFICATIONS:

Rectangular Section	
Length	5 in. (12.7 cm)
Width	4 in. (10.2 cm)
Cylindrical Section	
Diameter	2.5 in. (6.35 cm)
Length	4 in. (10.2 cm)
Overall Measurements	
Length	8 in. (20.3 cm)
Thickness	2.5 in. (6.35 cm)
Width	4 in. (10.2 cm)
Total Weight	3 lb (1.36 kg)

I. SUPPORT EQUIPMENT:

Power Source: The motor/handle assembly provides the mechanical power to drive the power saw.

Accessories: The power drill uses modified Black and Decker U-1354 blades with 14 teeth per in. (5.5 teeth per cm).

J. FOR MORE INFORMATION REFER TO:

Bibliography: 17, 40, 41, 42, 71

Tool Reference: Martin space tool kit, Martin space tool kit case, motor/handle assembly, power drill.

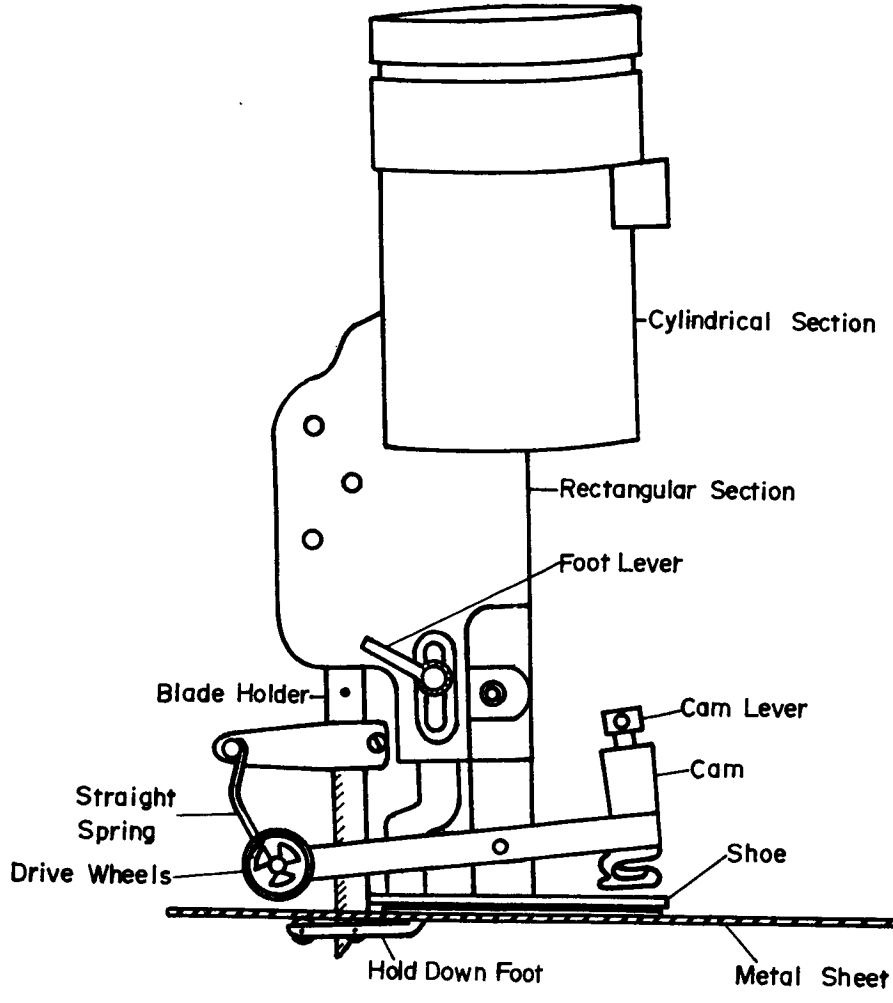

Figure 2-2. Power Saw. Drawing taken from Bibliography reference 41.

S-IVB WINDOW EMPLACEMENT TOOL KIT

A. PURPOSE: The S-IVB window emplacement tool kit was designed to include all the equipment necessary to construct a window in a S-IVB workshop.

B. PREVIOUS SOLUTIONS: There have been no previous space validated systems designed to emplace windows in space vehicles.

C. CURRENT METHOD OF OPERATION: The window emplacement tool kit consists of a lexan window mounted on a metal mount. This mount is permanently attached to a S-IVB skin section by four bolts located at the four corners of the tool kit. A double backed adhesive located between the mount and the window section forms an air-tight seal. A ridge located in the mount forms a 6 in. (15.2 cm) diameter circle that presses a 10 grain/ft (0.0021 kg/m) flexible linear charge against the skin section. An E-90 blasting cap can set the charge off to blow a hole in the skin section. Once this is done, the permanently emplaced window and mount serve as a porthole through which the outside surroundings can be viewed.

D. RELATED FUNCTIONAL CATEGORIES: None.

E. PERFORMANCE: Laboratory tests show that the kit functions well under earth ambient conditions of pressure and gravity.

F. ADVANTAGES AND DISADVANTAGES: Unavailable.

G. STATUS:

	Projected Date	Actual Date	Posted Date
Prototype Model	1969	1969	1969

Developer:
E. R. Coleman
Methods Development Group
Hayes International Corporation
PO Box 2287
Birmingham, Alabama 35812

Sponsor:
National Aeronautics and Space Administration
Marshall Space Flight Center
Huntsville, Alabama 35812

H. SPECIFICATIONS:

Hole diameter. . . . . 6 in. (15.2 cm)
Linear charge density. . . . . 10 grain/ft (0.0021 kg/m)

I. SUPPORT EQUIPMENT:

Power Source: All cutting power is supplied by the flexible linear charge.

Accessories: A source for an electric current to set off the charge is needed.

J. FOR MORE INFORMATION REFER TO:

Bibliography: 25

Tool Reference: None.

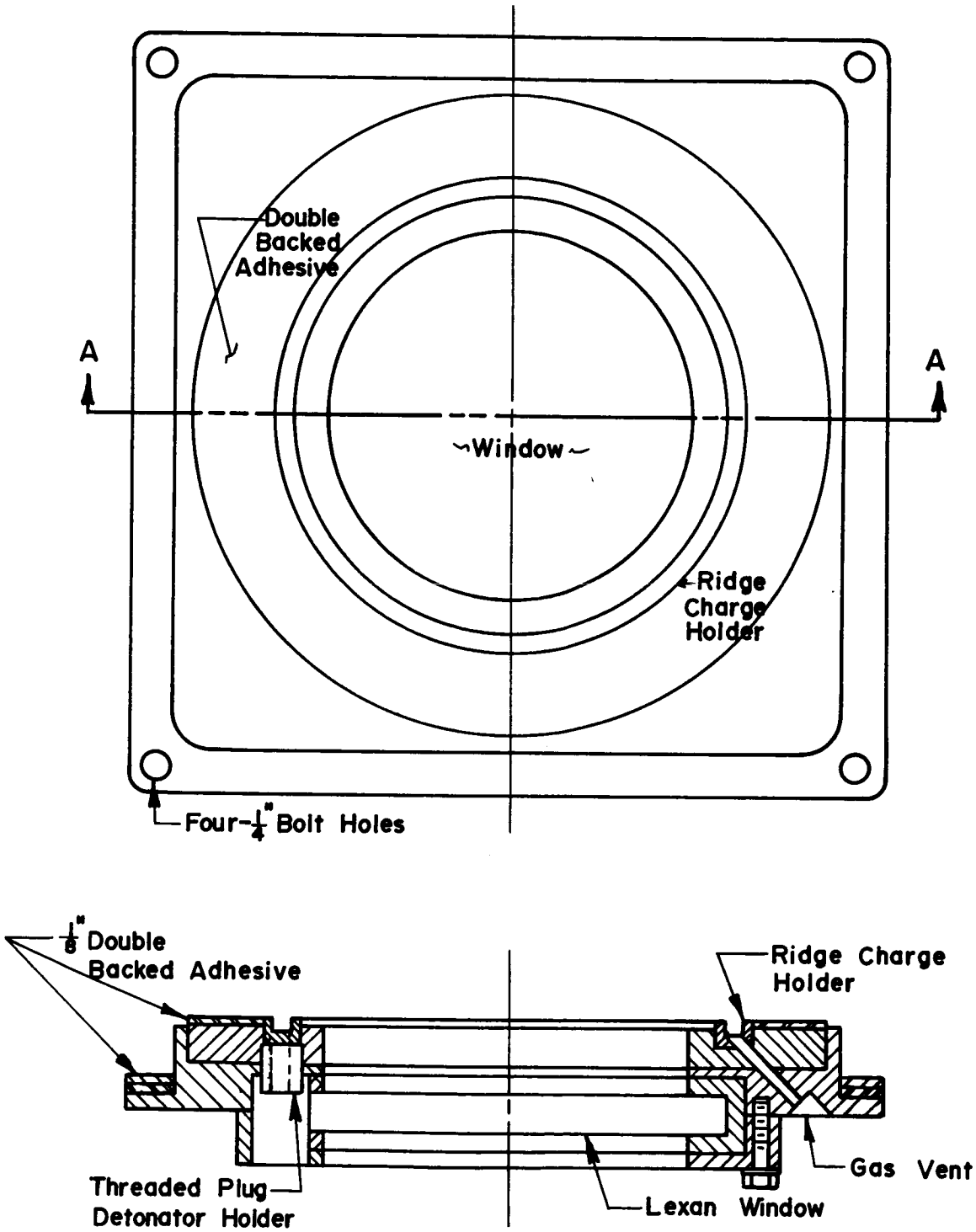

Section A-A

Figure 2-3. S-IVB Window Emplacement Tool Kit. Drawings taken from Bibliography reference 25.

WINDOW SAW CUTTING TOOL

A. PURPOSE: The window saw cutting tool was designed to cut 6 in. (15.2 cm) holes in the skin of the S-IVB workshop module for work lights and porthole emplacement.

B. PREVIOUS SOLUTIONS: There have been no previous space validated tools for this task.

C. CURRENT METHOD OF OPERATION: For operation, the unit is clamped to the ribs on the interior of the workshop skin. Power is supplied by compressed air supply at 3,000 psi (20.7×10^6 N/m^2) contained in a 7 in. (17.8 cm) sphere. First, a staple is driven into the skin of the spacecraft to retain that portion that is to be removed. Then an air motor drives a 55-tooth cylindrical cutting blade centered on the staple at 0.667 rps, cutting at a rate of 0.005 in. (0.0127 cm) per revolution through a total thickness of 0.25 in. (0.635 cm). Chips from the cutting operation are blown against the side of the blade housing by air from the exhaust ports of the air motor. The housing guides the chips outward into a porous collection bag.

D. RELATED FUNCTIONAL CATEGORIES: None.

E. PERFORMANCE: This tool has been tested several times in a laboratory and has been found to operate satisfactorily under earth ambient conditions. In each test, it was used to cut a hole in 1/8 in. (0.317 cm) 2014-T6 aluminum plate. The total run time for the last test was 32 sec, even though the total air supply was sufficient for a total of 45 sec.

F. ADVANTAGES AND DISADVANTAGES: This tool was designed to cut a specific size hole in a specific type material with a specific frame structure. Use of this tool for other tasks may require major modifications. Each time a hole has been cut, the sphere must be refilled before the tool can be used again. The tool was made as light as possible at the sacrifice of resistance to wear in the feed mechanism and is expected only to last for approximately 30 min of operation in space.

G. STATUS:

	Projected Date	Actual Date	Posted Date
Prototype Model	1967	1967	1969

Developers:
J. Foster and
Hank M. Stromburg
AAI Corporation
Cockeysville, Maryland 21030

Sponsor:
National Aeronautics and Space Administration
Marshall Space Flight Center
Huntsville, Alabama 35812
Contract No. NAS 8-20680

H. SPECIFICATIONS:

Supply sphere diameter	7 in. (17.8 cm)
Supply air pressure	3000 psi (20.7 x 10^6 N/m^2)
Feed mechanism diameter	7 in. (17.8 cm)
Circular blade diameter	6 in. (15.2 cm)
Air motor length	14 in. (35.6 cm)
Overall specifications:	
Height	14 in. (35.6 cm)
Weight	14 lb (6.36 kg)

I. SUPPORT EQUIPMENT:

Power Source: The power source is an integral part of the tool. See the Specifications.

Accessories: Equipment to refill the supply sphere is needed after every use.

J. FOR MORE INFORMATION REFER TO:

Bibliography: 6

Tool Reference: The window emplacement tool kit.

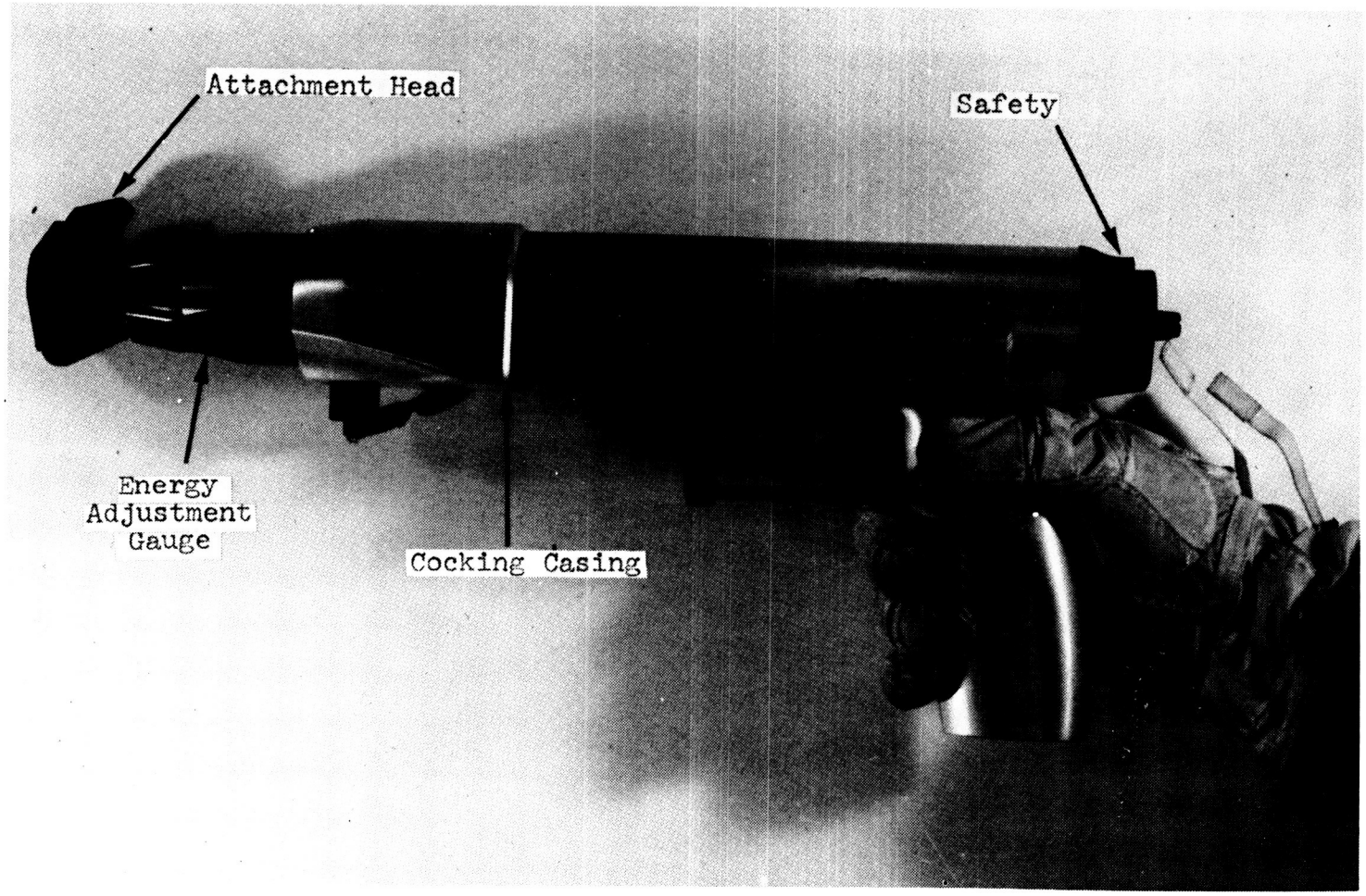

Figure 2-4. Window Saw Cutting Tool.
Photograph provided by AAI Corporation.

SECTION 3

HAMMERS

A space hammer can be used in construction operations to emplace rivets and to drive spike-type fasteners into the skin of space structures. The metal working capabilities of hammers may be exploited when repairs must be performed on metal panels damaged by collisions or distorted by welding operations. Hammers can be used to free stuck parts or to position tight fitting components. Hammers can drive chisel heads for cutting bolts, cables, or sheet metal, and special purpose hammers can be used for drifting pins in the assembly or disassembly of machinery.

DEAD BLOW HAMMER

A. PURPOSE: The dead blow hammer is designed to exert a percussion type force for freeing stuck parts, bending or straightening metal objects or positioning tight fitting components.

B. PREVIOUS SOLUTIONS: There have been no previous space validated hammers.

C. CURRENT METHOD OF OPERATION: This hand tool is a Lixie soft face dead blow hammer adapted for use as part of the Martin space tool kit. A plastic handle with a T-cross section has been cast over the normal wooden hammer handle to assure a good grip by the gloved astronaut. The head contains a cavity which is 75% filled with cast iron shot. As the hammer impacts, the shot controls the energy distribution to minimize rebound and to effectively deliver more energy to the work. By using the inertia of the hammer in swift, short blows, an astronaut can effectively perform hammering tasks.

D. RELATED FUNCTIONAL CATEGORIES: None.

E. PERFORMANCE: The hammer was tested at the Marshall Space Flight Center by a test subject wearing the Mark IV pressure suit in a five-degree-of-freedom simulator. By using short, swift blows and gripping a handhold, the test subject was able to accomplish a hammering task. However, the plastic handle was too large for a firm grip and too far from the head to facilitate positioning accuracy.

F. ADVANTAGES AND DISADVANTAGES: Due to the handle design, the hammer can be grasped and used in one direction.

G. STATUS:

	Projected Date	Actual Date	Posted Date
Prototype Model	1965	1965	1969

Developers:
Allen E. Holmes and A. L. Hamilton
Martin Company, Baltimore Division
Baltimore, Maryland 21203

Sponsor:
National Aeronautics and Space Administration
Manned Spacecraft Center
Houston, Texas 77058
Contract No. NAS 9-3161

H. SPECIFICATIONS:

Length	12.5 in. (31.8 cm)
Width	1.5 in. (3.8 cm)
Head Length	4.3 in. (10.9 cm)
Head Weight	1.25 lb (0.568 kg)
Total Weight	1.75 lb (0.795 kg)

I. SUPPORT EQUIPMENT:

Power Source: This is a manually operated tool.

Accessories: This tool is stored in the Martin space tool kit case.

J. FOR MORE INFORMATION REFER TO:

Bibliography: 18, 40, 41, 42, 71

Tool Reference: Martin space tool kit, Martin space tool kit case.

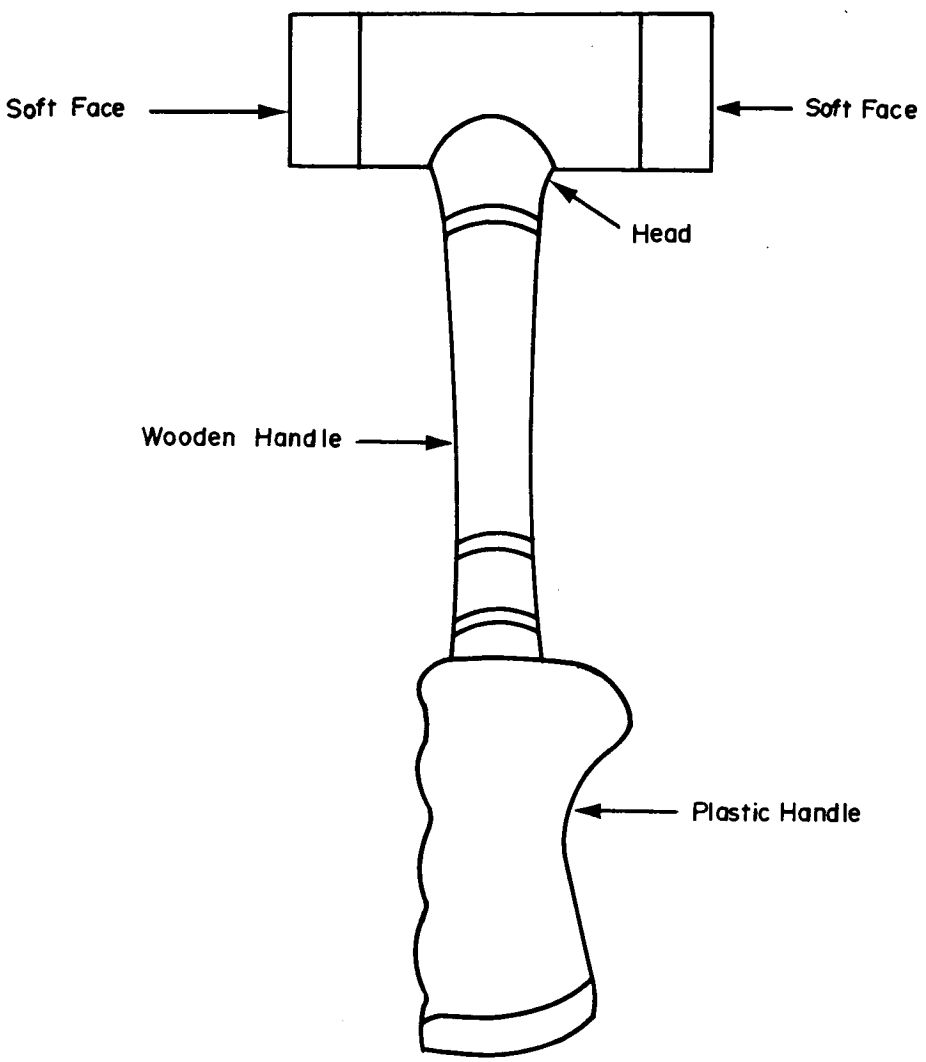

Figure 3-1. Dead Blow Hammer. Drawing taken from Bibliography reference 41.

WINCHESTER SPACE TOOL

A. PURPOSE: The Winchester space tool was designed as a reactionless tool that can function as a ball pean hammer, a chisel, and a riveting tool. It can rivet a nail and clip assembly into the skin of a space vehicle to provide an attachment point for tethering operations.

B. PREVIOUS SOLUTIONS: There have been no previous space validated tools that could perform hammering, chiseling and riveting tool functions.

C. CURRENT METHOD OF OPERATION: The Winchester space tool is very similar to the Ramset tool. When the trigger is pulled, a 22 cal. cartridge explodes and releases expanding gases into a piston chamber. As the piston moves forward, it drives the hammer, chisel or riveter head. Gases escaping backward from nozzles in the attachment head, tend to counteract reaction forces. In this way, up to 140 ft-lb (190m-N) of energy can be delivered to the workpiece with a minimum of reaction on the operator. The amount of energy that is delivered can be reduced by adjustment of gauges on the attachments. These adjust the length of the pistons and therefore, the volume of the piston cylinder. After a cartridge has been fired, a new one can be placed in firing position by pulling back the casing immediately behind the attachment. This actuates a lever which moves a revolving belt on which there are ten charges. A safety on the back of the barrel can be actuated to prevent the tool from firing accidently.

D. RELATED FUNCTIONAL CATEGORIES: 2

E. PERFORMANCE: Unavailable.

F. ADVANTAGES AND DISADVANTAGES: Unavailable.

G. STATUS:

	Projected Date	Actual Date	Posted Date
Prototype Model	1969	1969	1969

Developer:
Winchester Arms Corporation
New Haven, Connecticut

Sponsor:
National Aeronautics and Space Administration
Marshall Space Flight Center
Huntsville, Alabama 35812
Contract No. NAS 8-20684

H. SPECIFICATIONS:

Barrel length	6 in.	(15.2 cm)
Barrel diameter	2 in.	(5.08 cm)
Tool weight	7.68 lb	(3.49 kg)

I. SUPPORT EQUIPMENT:

Power Source: Power is provided by modified 22 caliber Hornet cartridges.

Accessories: The Winchester space tool has three attachments and a nail and clip assembly as follows:

Hammering attachment	2.94 lb	(1.34 kg)
Chiseling attachment	2.96 lb	(1.35 kg)
Riveting attachment	1.92 lb	(0.87 kg)
Nail and Clip assembly	2.22 lb	(1.01 kg)

J. FOR MORE INFORMATION REFER TO:

Bibliography: Personal communications.

Tool Reference: None.

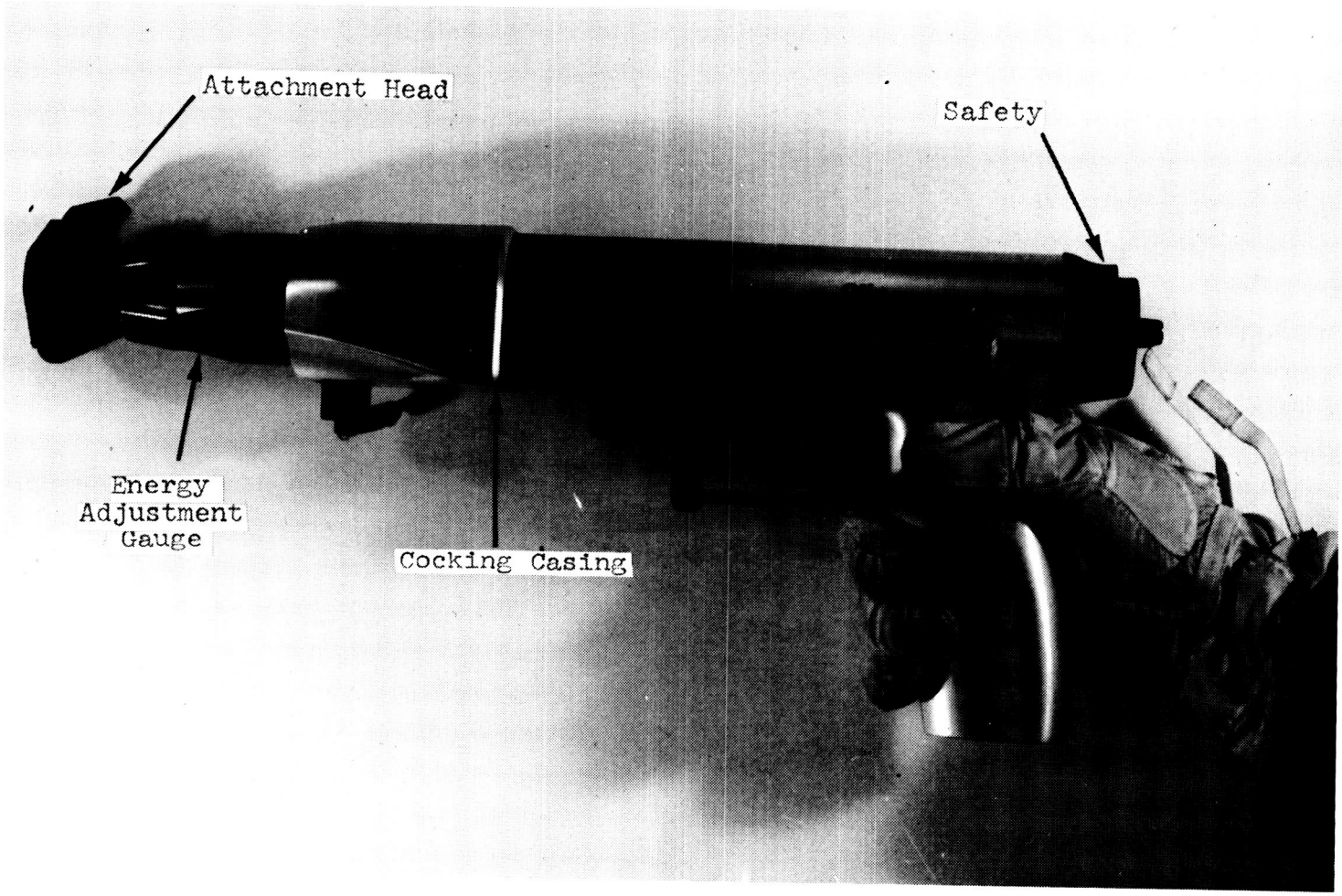

Figure 3-2. Winchester Space Tool. Photograph provided by the Marshall Space Flight Center.

SECTION 4

ILLUMINATION EQUIPMENT

In order for an astronaut to perform useful work, the worksite must be adequately illuminated. There are several ways this problem can be attacked. Lights may be placed on the astronaut's suit, mounted near the worksite or even attached to his tools when there is not enough light. Another method would be the use of reflectors to reflect light from the sun, moon or earth onto the worksite. On the other hand, the problem may be that there is too much light. In this case the astronaut may use shades or shields. Unfortunately, only a few devices have been developed to handle these illumination problems.

WORK LIGHTS

A. PURPOSE: The work lights were designed to illuminate the work-site for an astronaut performing space maintenance or assembly tasks.

B. PREVIOUS SOLUTIONS: There have been no previous space validated systems.

C. CURRENT METHOD OF OPERATION: Two work lights are included in the Martin space tool kit. The reflector of each work light is a 30° (0.53 rad) semi-ellipsoid of revolution with a General Electric No. 68 lamp mounted in it so that the filament is located at the focus. The beam then appears to emanate from the conjugate focus and maximum reflector efficiency is achieved.

When the work lights are to be used, they are removed from the tool kit case and mounted on each side of the astronaut's helmet at the temple. The lights are plugged into an electrical socket external to the tool kit case on the right, front corner. An on-off switch, inside the case, is accessible when the smaller lid of the case is opened.

D. RELATED FUNCTIONAL CATEGORIES: None.

E. PERFORMANCE: Qualitative tests performed by a suited operator in a five-degree-of-freedom simulator demonstrated a number of difficulties. The suited operator experienced difficulty in using the electrical plug, untangling the cord from other tools, and storing the cord and lights within the case.

F. ADVANTAGES AND DISADVANTAGES: This lighting system was developed for use with a spacesuit with a helmet that turned with the astronaut's head when he turned his head from side to side. In such a case, this system had the advantage that it would automatically shine in the direction the astronaut was facing.

G. STATUS:

	Projected Date	Actual Date	Posted Date
Prototype Model	1965	1965	1969

Developers:
Allen E. Holmes and A. L. Hamilton
Martin Company, Baltimore Division
Baltimore, Maryland 21203

Sponsor:
National Aeronautics and Space Administration
Manned Spacecraft Center
Houston, Texas 77058
Contract No. NAS 9-3161

H. SPECIFICATIONS:

Each light length	4.0 in. (10.2 cm)
Each light diameter	2.2 in. (5.6 cm)
Total weight	0.875 lb (0.398 kg)
Lamp voltage	12 V
Power for each light	6.9 W

I. SUPPORT EQUIPMENT:

Power source: Power is provided by a battery in the Martin space tool kit case.

Accessories: The work lights are stored in the Martin space tool kit.

J. FOR MORE INFORMATION REFER TO:

Bibliography: 17, 40, 41, 42, 71

Tool Reference: Martin space tool kit, Martin space tool kit case.

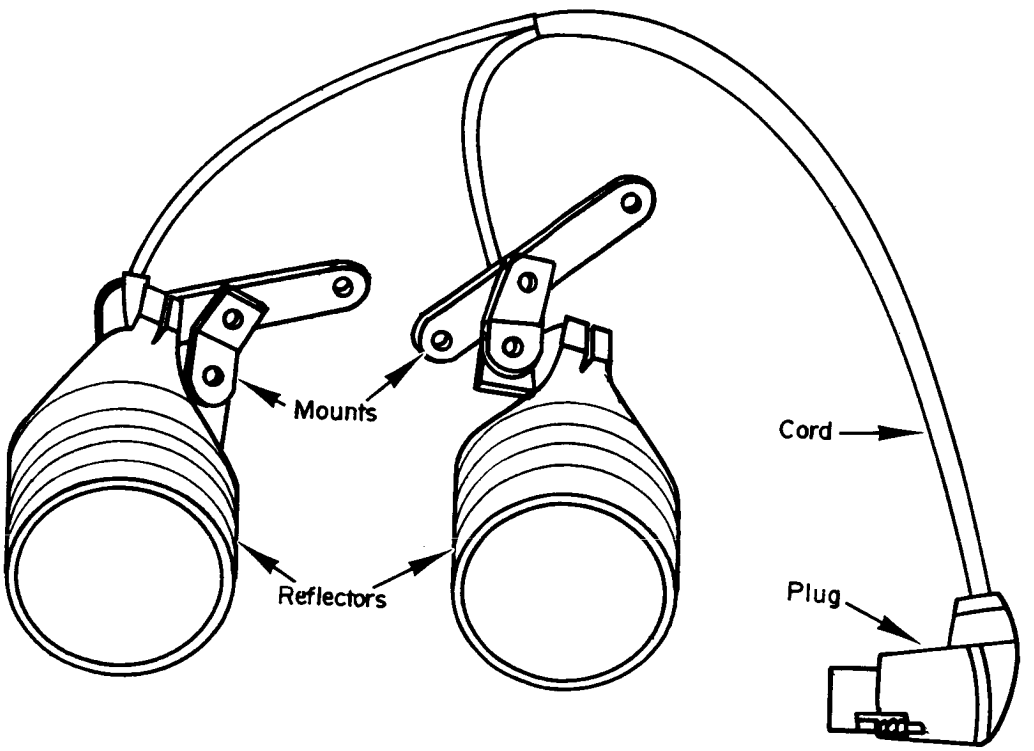

Figure 4-1a. Work Lights. Drawing taken from Bibliography reference No. 41.

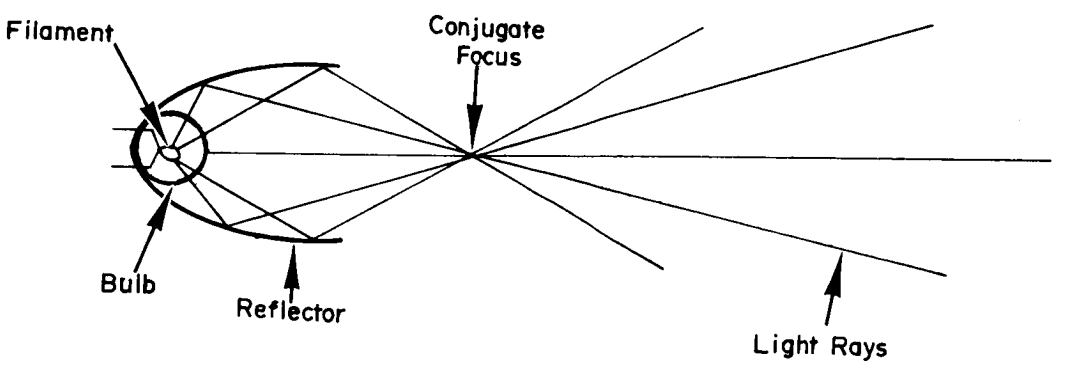

Figure 4-1b. Work Light Reflector. Drawing taken from Bibliography reference No. 41.

SECTION 5

GAS LEAK, PRESSURE DETECTION AND MEASUREMENT TOOLS AND EQUIPMENT

Any space structure that will be manned for a long period of time must not allow excessive air or fluid leaks. However, leaks may develop in the space structure's skin, joints, pipes or tubing due to faulty construction, meteorite damage or stresses during space vehicle acceleration. Therefore, small portable tools that will measure gas pressure, and detect and measure gas and fluid leaks will be required in future manned missions.

MASS FLOWMETER

A. PURPOSE: The mass flowmeter was designed to measure flow rates discharging into a space environment from purges and collected leaks at leak ports on aerospace hardware.

B. PREVIOUS SOLUTIONS: There have been no previous space validated leak detection systems.

C. CURRENT METHOD OF OPERATION: The mass flowmeter measures gas flow rate by measurement of the pressure of the gas before a restriction in the gas stream emptying into the low ambient pressure of outer space. Under these conditions the gas flow rate is proportional to the pressure measurement. If the molecular weight and temperature of the gas and the size of the restriction are known, the flow rate can be calculated. The mass flowmeter accomplishes this task by means of three main subsystems:

(1) The gas handling and conditioning system was designed to receive the flow from a leak or purge port, conduct it through a temperature conditioning chamber to a orifice manifold and exhaust it into space. The gas is gathered by means of one of many specialized attachments developed to correspond to different areas where leaks and purges may occur. The gas is led to the conditioning chamber where the gas is heated by battery operated resistance elements if the gas is cooler than 80°F (300°K). If the gas is warmer than 92°F (306°K), it is cooled by a canister of dodecahydrate of sodium biphosphate, a hydrated salt which loses its water of crystallization above this temperature and absorbs heat. Heat radiation to space is reduced by building the flowmeter case as a box within a box and using aluminized Kapton film as a "superinsulation" between the walls. In this way the temperature of the gas can be maintained between 75°F to 125°F (297°K to 325°K).

(2) The orificing system consists of three orifices of different sizes to accomodate the wide variety of gases and wide range of flow rates to be handled. The proper size orifice for a flow measurement is selected with a toggle valve.

(3) The pressure measurement system utilizes a pressure gauge with a full scale pressure of 20 in. of water (4.98×10^3 N/m^2) to measure the gas pressure in the orifice manifold. In the flight model the meter scale can be either marked with percent of full scale and calibration curves can be used to give actual flow rate, or a multiple scale can be used with flow rates being read directly. The pressure gauge is protected from destructive overpressure by a system relief valve which vents the orifice manifold into space and a gauge overpressure cutoff valve which removes the gauge from exposure to the gas when line pressure exceeds 30 in. of water (7.47×10^3 N/m^2). A thermometer measures the temperature of the gas in the orifice manifold if the ultimate accuracy of the system is required for a particular measurement.

D. RELATED FUNCTIONAL CATEGORIES: None.

E. PERFORMANCE: The mass flowmeter was tested for flow testing both by Aero Vac and by NASA. The performance of the mass flowmeter met the requirements stipulated in the contract. These were that the meter should measure, within 90 sec, a leak of 0.006 to 0.67 stand. $in.^3/sec$ (0.1 to 11 stand. cm^3/sec) in a pressure environment of 1.93×10^{-5} to 1.33×10^{-15} psi (1.33×10^{-1} to 1.33×10^{-11} N/m^2) with an error not to exceed 5% of reading, whichever is smaller. Also the flow meter was not effected by nor did it cause electrical interference.

F. ADVANTAGES AND DISADVANTAGES: The mass flowmeter can be easily handled by a single astronaut. However, the tool can only be used when it is exposed to the low ambient pressure of outer space and it requires the use of many specialized attachments to correspond to different areas where a leak or purge may occur.

G. STATUS:

	Projected Date	Actual Date	Posted Date
Prototype Model	1968	1968	1969

Developer:
Donald W. Jones
Aero Vac Corporation
P.O. Box 448
Troy, New York 12181

Sponsor:
National Aeronautics and Space Administration
Marshall Space Flight Center
Huntsville, Alabama 35812

H. SPECIFICATIONS:

Length	12.5 in.	(31.8 cm)
Width	9.25 in.	(23.5 cm)
Height	8.5 in.	(21.6 cm)
Weight	7.75 lb	(3.51 kg)

I. SUPPORT EQUIPMENT:

Power Source: The unit has an integral, space-rated, 9 volt, rechargeable silver zinc battery with a 22 W-hr capacity.

Accessories: The unit has several attachments which are required to cover different areas where a gas flow may occur and to lead the gas to the mass flowmeter.

J. FOR MORE INFORMATION REFER TO:

Bibliography: Personal communications.

Tool Reference: None.

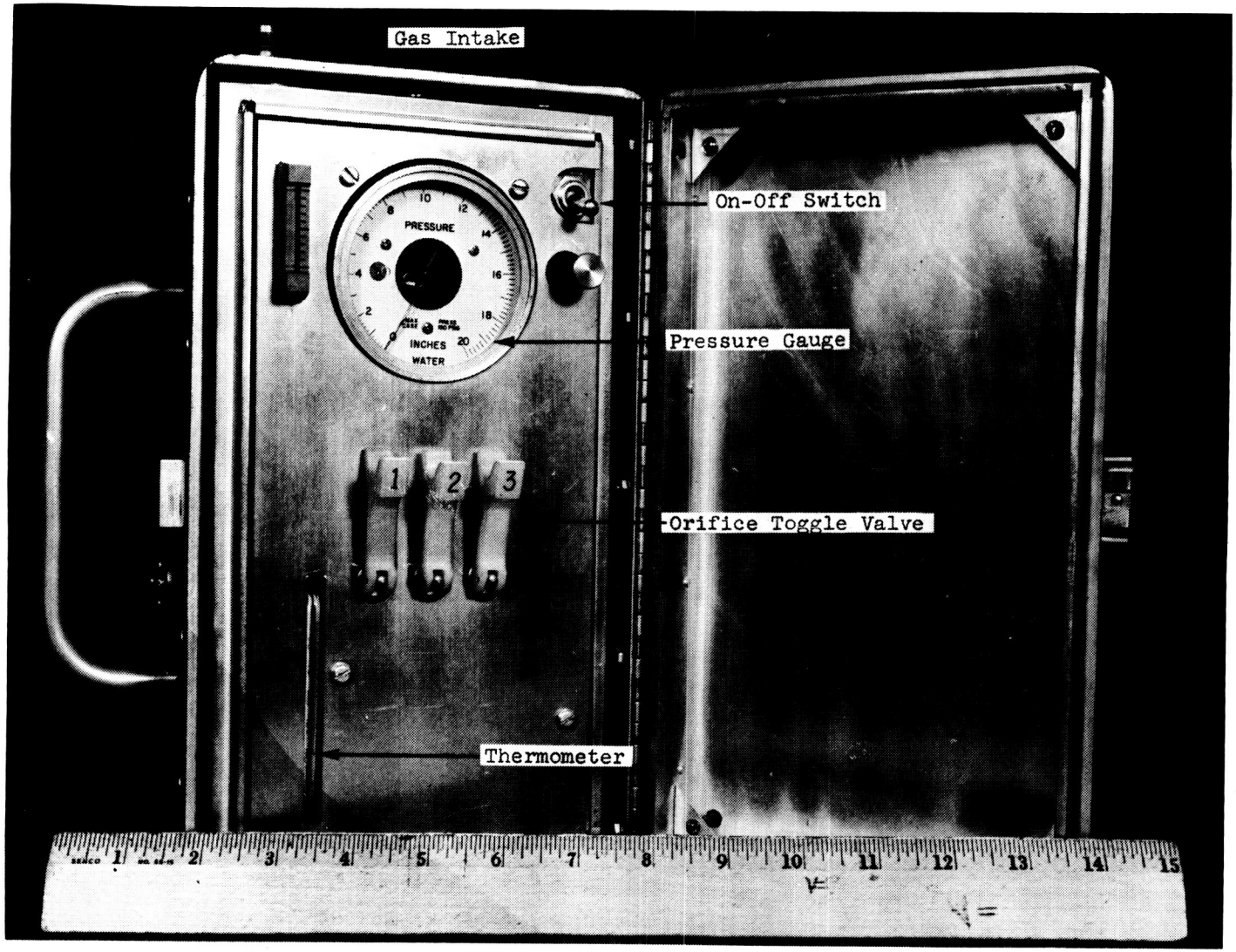

Figure 5-1. Mass Flowmeter. Photograph provided by the Marshall Space Flight Center.

PILOT MODEL LEAK DETECTOR

A. PURPOSE: The pilot model leak detector was designed as a hand-held, hermetically sealed, self-powered instrument capable of detecting gas leaks emanating from space hardware and measuring very low pressures.

B. PREVIOUS SOLUTIONS: There have been no previous space validated leak detection systems.

C. CURRENT METHOD OF OPERATION: Leak and pressure measurements are sensed by a cold cathode trigger gauge, transformed to logarithmic electrical signals and displayed as deflections on the readout meter. The electronic equipment includes a logarithmic amplifier and an automatic zero-suppression circuit.

When the astronaut desires to use the tool, he grasps the pistol grip handle and actuates the switch under the handle. A two minute warm-up time is necessary when first applying power in order to reach operating temperature for stabilizing the transistor. Thereafter, power may be removed and reapplied within a reasonable period without requiring additional warm-up time.

In the pressure measurement mode, pressure is read on the meter after switching the power switch off and then back on. This removes the zero-suppression circuit from the system for about 5 seconds and permits the direct readout of pressure. Pressures of 10^{-10} to 10^{-4} torr (1.33×10^{-8} to 1.33×10^{-2} N/m^2) can be measured.

Thirty seconds after the zero-suppression circuit has been reapplied, the amplifier is automatically balanced to the point that the meter reading has been reduced to approximately 10^{-10} torr (1.33×10^{-8} N/m^2). In this mode a leak is detected by passing the trigger gauge of the instrument near the suspected leak. The presence of a leak is indicated by the deflection of the meter needle. A leak as small as 6.17×10^{-8} stand. $in.^3/sec$ (10^{-6} stand. cm^3/sec) can be detected.

D. RELATED FUNCTIONAL CATEGORIES: None.

E. PERFORMANCE: The leak detector was mounted in a vacuum chamber subjected to several pressures from 10^{-7} to 10^{-4} torr (1.33×10^{-5} to 1.33×10^{-2} N/m^2). At each pressure, pressure readings were taken and the tool was passed in front of a 4.7×10^{-8} stand. $in.^3/sec$ (7.7×10^{-7} stand. cm^3/sec) oxygen leak. Pressure measurements were low by about 1/2 log and a positive indication of a leak was given in 19 of 20 leak tests.

F. ADVANTAGES AND DISADVANTAGES: Unavailable.

G. STATUS:

	Projected Date	Actual Date	Posted Date
Prototype Model	1969	1969	1969

Developer:
Melpar Inc.
7700 Arlington Boulevard
Falls Church, Virginia 22046

Sponsor:
National Aeronautics and Space Administration
Manned Space Flight Center
Huntsville, Alabama 35812
Contract No. NAS 8-20621

H. SPECIFICATIONS:

	Diameter	Length	Width	Thickness
Cylinder	4.7 in. (12 cm)	8.3 in. (21 cm)		
Barrel	1.9 in. (4.8 cm)	8.3 in. (21 cm)		
Handle		7.8 in. (20 cm)	1.7 in. (4.2 cm)	1.2 in. (3.1 cm)

Total Weight . . . . . 6.3 lb (2.9 kg)

I. SUPPORT EQUIPMENT:

Power Source: The instrument operates from a self-contained bank of rechargeable silver-zinc batteries with a dc output of 28 V rated at 2.5 A-hr. The unit incorporates two input jacks at the end of the handle which permit operation from an external 28 V direct current power source and the recharging of the battery.

Accessories: An external 28 V direct current power source is required to recharge internal batteries.

J. FOR MORE INFORMATION REFER TO:

Bibliography: 11, 12

Tool Reference: None.

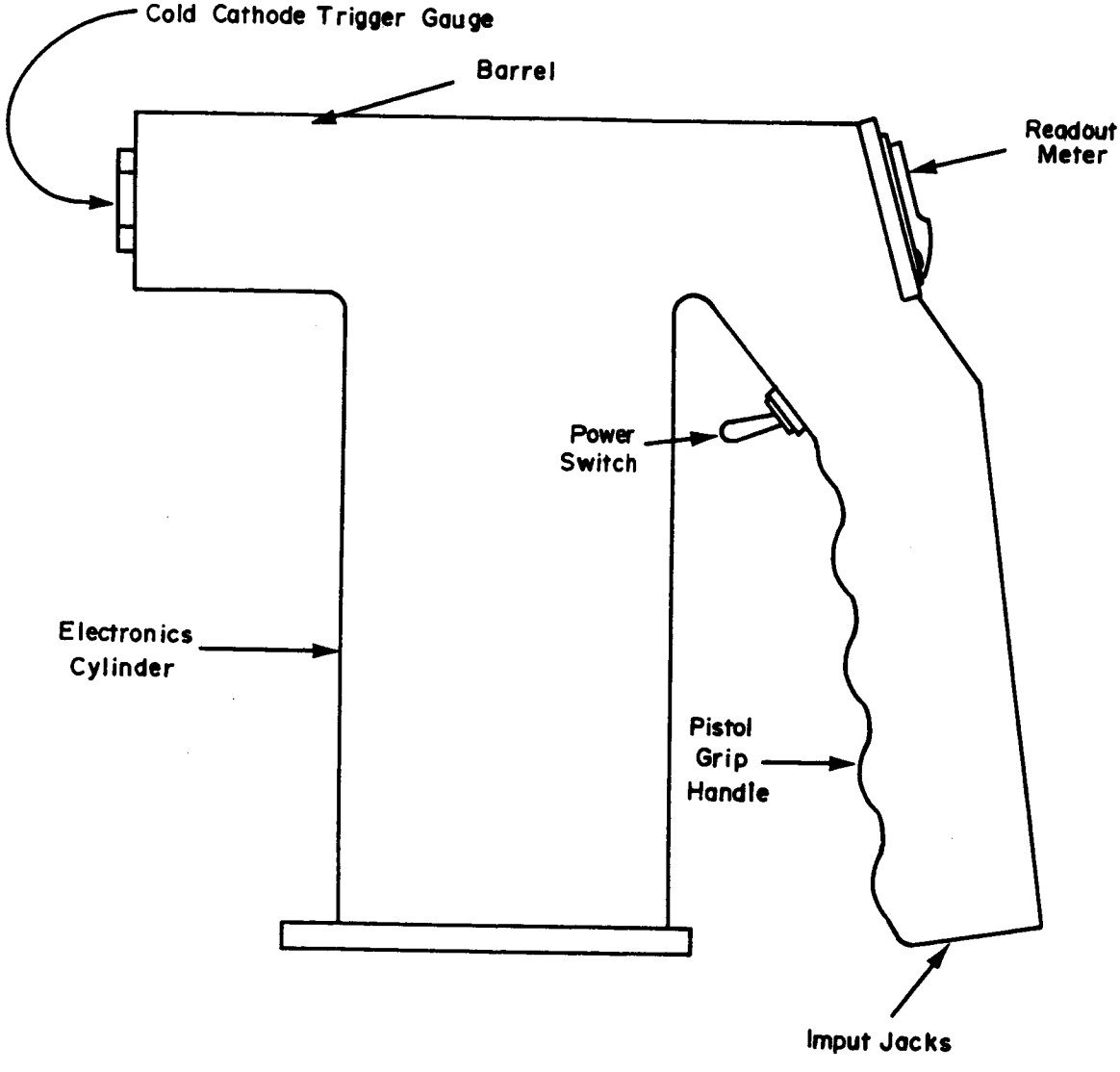

Figure 5-2. Pilot Model Leak Detector. Drawing taken from Bibliography reference No. 11.

SECTION 6

LUNAR SAMPLING AND SURVEYING TOOLS

During the Apollo flights to the lunar surface, a number of hand and power tools will be used to collect lunar samples, to install equipment that will measure physical and environmental characteristics of the lunar surface, and to perform surveying operations. A vigorous program has been carried out in the development of these tools.

APOLLO LUNAR SURFACE DRILL (ALSD) SYSTEM

A. PURPOSE: The ALSD System was designed to drill and prepare two holes in the lunar surface in order to implant heat probes for the Apollo heat flow experiment and to collect and store a core sample from the second hole for return to earth.

B. PREVIOUS SOLUTIONS: There have been no previous space validated systems.

C. CURRENT METHOD OF OPERATION: The ALSD system was designed as a totally integrated system which is stored in the Apollo lunar surface experiments package (ALSEP) pallet in the lunar module (LM) during the flight to the moon. The system can be removed as a single package from the ALSEP pallet and carried to the selected drilling site for subsequent assembly and operation. Two holes are drilled to a maximum depth of 9.8 ft (3 m) and casings are driven into the holes to prevent cave-in and to facilitate insertion of the probes. Subsurface core material from the first hole is discarded; but, the material from the second hole will be retained in the drill and returned to earth.

The ALSD system is composed of thirteen basic units. (1) The rechargeable battery provides enough power for the mission without recharging. (2) The thermal shroud provides battery temperature compensation when the drill is not in operation and the sun has not risen above 22° (0.38 rad) over the horizon. (3) The handle and switch assembly provides the astronaut with a means to apply manual restraint, axial force and the motor control required for drilling. (4) The power head is a single unit which houses the electric motor, reduction gears, a clutch to limit reactive torque to a level which can be safely controlled by the astronaut, a percussor which converts the uniform rotary motion of the motor into pulsating, high energy blows, a shock absorber, and an output spindle. (5) The thermal guard is a wire cage surrounding the power head that prevents the astronaut from accidently contacting areas of the power head which may exceed 250°F (394°K) during drilling operations. (6) The core bit cuts the lunar rock. (7) Eight extension tubes form a drill string to couple the bit to the output spindle of the power head. During drill operation, the extension tubes are added in groups of two as the hole depth increases. (8) The wrench provides a means to decouple the extension tubes after a hole is drilled. (9) Extension tube caps are installed on each end of the extension tubes after the second hole is drilled to retain the lunar material. (10) There are two sets of six hole casings for the two holes. (11) The hole casing adapter couples the casings to the output spindle of the power head. (12) The rack assembly is deployed into a tripod configuration on the moon for handy stowage of the extension tubes, hole casings, and the wrench during drilling operations. (13) Finally, the treadle assembly provides guidance for the drill bit and houses the drill string lock used with the wrench for extension tube decoupling operations.

D. RELATED FUNCTIONAL CATEGORIES: 2, 3

E. PERFORMANCE: The ALSD is capable of drilling a 1.032 in. (2.621 cm) diameter hole in dense basalt at a maximum rate of 1.5 in./min (0.0635 cm/sec) or 43% porosity vesicular basalt at a maximum rate of 6 to 8 in./min (0.254 to 0.339 cm/sec), with an applied axial bit force of 15 lb (66.8 N). The maximum drilling rate is degraded in proportion to hole depth.

F. ADVANTAGES AND DISADVANTAGES: In rotary-percussion drilling the axial bit pressure and rotary torque requirements are considerably less than those required for rotary drilling. Also, drill bit coolant is not required.

G. STATUS:

	Projected Date	Actual Date	Posted Date
Prototype Model	1968	1968	1969

Developer:
D. S. Crouch (ALSD Project Manager)
Martin Marietta Corporation, Denver Division
Denver, Colorado 80201

Sponsor:
National Aeronautics and Space Administration
Manned Spacecraft Center
Houston, Texas 77058
Contract No. NAS 9-6587

H. SPECIFICATIONS:

Operating voltage	23 V
Operating current	18.75 A
Battery power capacity	300 W-hr
Total weight	27.25 lb (12.4 kg)

I. SUPPORT EQUIPMENT:

Power Source: A rechargeable, silver-zinc battery is an integral part of the system. See the specifications.

Accessories: A pressurization unit for pressuring the battery and power head and a battery charging unit are required.

J. FOR MORE INFORMATION REFER TO:

Bibliography: 10, 27, 28

Tool Reference: Powered lunar geologist tool.

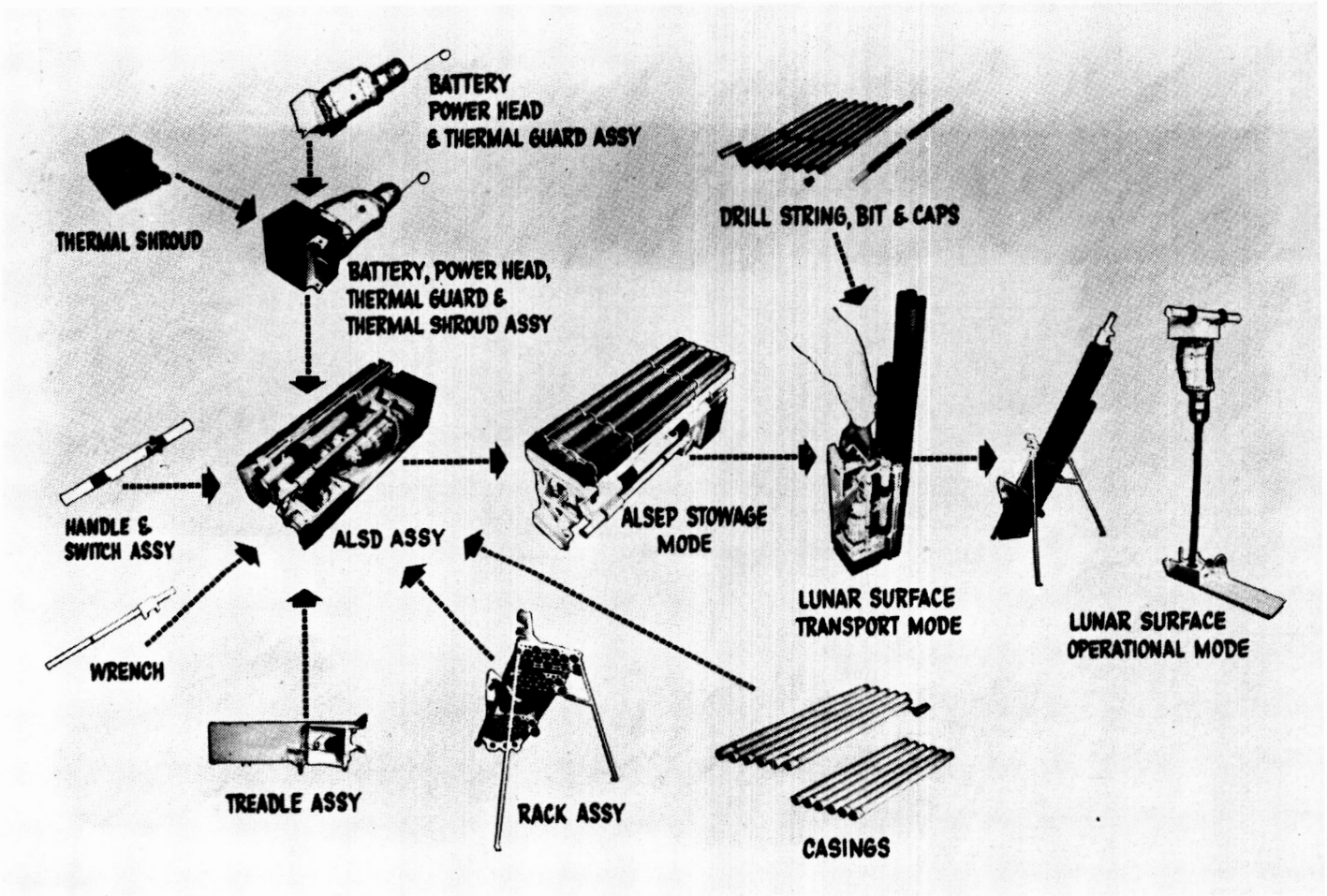

Figure 6-1. Apollo Lunar Surface Drill (ALSD) System.
Photograph provided by Martin Marietta Corporation.

COLOR CHART

A. PURPOSE: The color chart is used for lunar rock identification by color based on the standard Munsel colors.

B. PREVIOUS SOLUTIONS: There have been no previous space validated systems.

C. CURRENT METHOD OF OPERATION: The color chart is part of the prototype lunar geological tool kit and is stored in the reversible geologic tool container. When an astronaut discovers a rock he wishes to identify, he can remove the color chart from the tool container and compare the twelve colors on the chart with the color of the rock to aid in identification.

D. RELATED FUNCTIONAL CATEGORIES: None.

E. PERFORMANCE: No record of accomplishment.

F. ADVANTAGES AND DISADVANTAGES: Unavailable.

G. STATUS:

	Projected Date	Actual Date	Posted Date
Prototype Model	1965	1965	1969

Developer:
D. S. Crouch (Program Technical Director)
Martin Marietta Corporation, Denver Division
Denver, Colorado 80201

Sponsor:
National Aeronautics and Space Administration
Manned Spacecraft Center
Houston, Texas 77058
Contract No. NAS 9-3647

H. SPECIFICATIONS:

Weight. . . . . 0.071 lb (0.0324 kg)

I. SUPPORT EQUIPMENT:

Power Source: This is a manually operated tool.

Accessories: This tool is stored in the reversible geological tool container.

J. FOR MORE INFORMATION REFER TO:

Bibliography: 26, 29, 47

Tool Reference: Prototype lunar geological tool kit, reversible geological tool container.

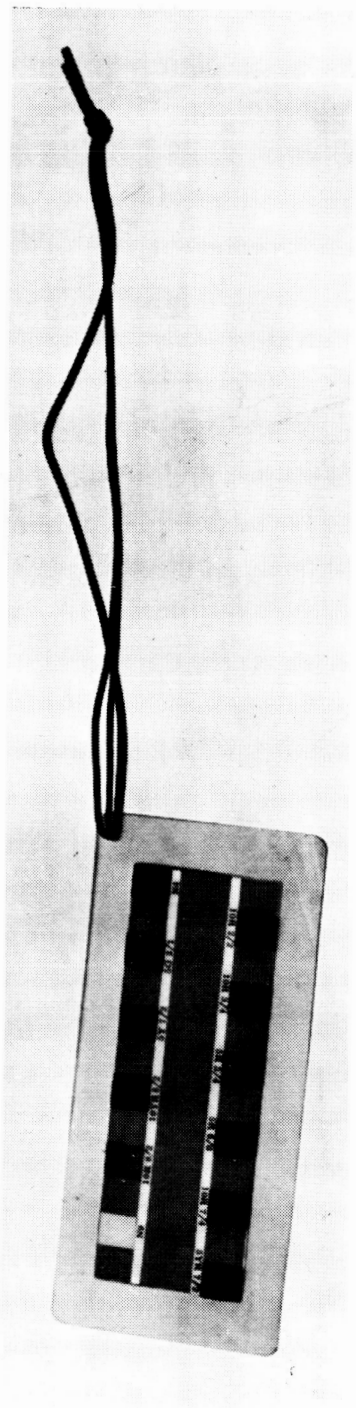

Figure 6-2. Color Chart. Photograph provided by the Manned Spacecraft Center.

HAND LENS

A. PURPOSE: The hand lens was designed to aid in the examination and identification of lunar rock specimens.

B. PREVIOUS SOLUTIONS: There have been no previous space validated systems.

C. CURRENT METHOD OF OPERATION: The hand lens is part of the lunar geological tool kit and is stored in the reversible geological tool container. When an astronaut desires to examine a rock, he can remove the hand lens from the tool container and examine the rock through one of the tool's three lenses.

The hand lens is a single handle in which three lenses of different magnification have been mounted. The large diameter, 4.5 magnification lens permits a relatively wide visual field examination of the rock specimen at low magnification. The lens handle can be moved relative to the rock sample to facilitate higher magnification inspections with correspondingly smaller fields of vision. The lenses are recessed into the handle to prevent excessive sun glare from the top side, and to reduce the possibility of lens damage.

D. RELATED FUNCTIONAL CATEGORIES: None.

E. PERFORMANCE: Three achromatic triplet-type lenses were selected for the hand lens. These lenses possess focal lengths of 2.18 in. (5.55 cm), 1.06 in. (2.70 cm) and 0.79 in. (2.0 cm) with respective magnifications of 4.5, 9.4 and 12.8. A vacuum test demonstrated that the lenses will not outgas and "fog" under a vacuum.

F. ADVANTAGES AND DISADVANTAGES: Normally a hand lens is used with the lens as close as possible to the eye to obtain a maximum field of view. However, a spacesuited astronaut can not bring the lens any closer than the spacesuit helmet visor - a distance of about 3 in. (7.6 cm). This results in a total area of field of view reduction of 6:1 for the 4.5 magnification lens and approximately 9:1 for the 9.4 and 12.8 magnification lenses. Thus the astronaut must scan the rock specimen with the hand lens to examine same area viewable from a stationary position if the lens were used at the normal eye-to-lens distance.

G. STATUS:

	Projected Date	Actual Date	Posted Date
Prototype Model	1965	1965	1969

Developer:

D. S. Crouch (Program Technical Director)
Martin Marietta Corporation, Denver Division
Denver, Colorado 80201

Sponsor:
National Aeronautics and Space Administration
Manned Spacecraft Center
Houston, Texas 77058
Contract No. NAS 9-3647

H. SPECIFICATIONS:

Weight. . . . . 0.243 lb (0.11 kg)
Magnifications. . . . . 4.5, 9.4 and 12.8

I. SUPPORT EQUIPMENT:

Power Source: This is a manually operated tool.

Accessories: This tool is stored in the reversible geological tool kit.

J. FOR MORE INFORMATION REFER TO:

Bibliography: 26, 29, 47

Tool Reference: Prototype lunar geological tool kit, reversible geological tool container.

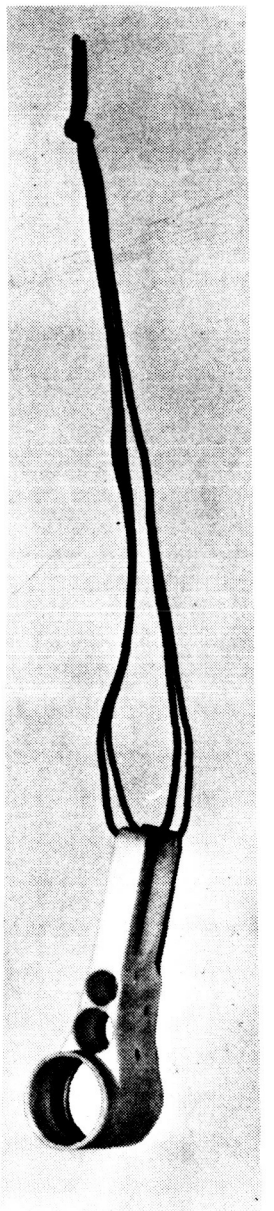

Figure 6-3. Hand Lens. Photograph provided by the Manned Spacecraft Center.

JACOB STAFF

A. PURPOSE: The Jacob staff was designed to serve as: (1) a support for the orthogonal clinometer and sun gnomon assembly during surveying operations, (2) a walking aid for the astronaut, and (3) a measuring scale.

B. PREVIOUS SOLUTIONS: There have been no previous space validated systems.

C. CURRENT METHOD OF OPERATION: The Jacob staff is part of the prototype lunar geological tool kit and is stored in two sections in the reversible geological tool container. Before surveying operations, the two sections of the staff are removed from the tool container and are coupled together by means of a quick disconnect fastener. The staff is attached to a bracket on the tool container to be held up vertically when the tool container is set on the ground to take readings with the clinometer assembly. A cutout is provided at the top of the staff to engage the "roll" control lever of the clinometer assembly. After initial assembly, the clinometer can remain attached as the astronaut carries the tool container from place to place. The staff can also be used by itself as a walking aid, as the astronaut traverses the lunar surface and probes areas which may contain large subsurface vesicles or deep dust deposits. A scale, divided into feet, inches, and tenths of inches, is inscribed on the staff for the measurement of small topographic features.

D. RELATED FUNCTIONAL CATEGORIES: 7

E. PERFORMANCE: A brief "walk-through" test was performed by a spacesuited subject for the purpose of identifying interface problem areas. Use of the Jacob staff as a surveying instrument support, measuring scale and walking aid proved to be useful. However, attachment of the staff to the clinometer by the spacesuited subject proved to be impossible.

F. ADVANTAGES AND DISADVANTAGES: Unavailable.

G. STATUS:

	Projected Date	Actual Date	Posted Date
Prototype Model	1965	1965	1969

Developer:
D. S. Crouch (Program Technical Director)
Martin Marietta Corporation, Denver Division
Denver, Colorado 80201

Sponsor:
National Aeronautics and Space Administration
Manned Spacecraft Center
Houston, Texas 77058
Contract No. NAS 9-3647

H. SPECIFICATIONS:

Length of each section	2 ft (0.61 m)
Total length assembled	3.75 ft (1.14 m)
Weight	1.7 lb (0.77 kg)

I. SUPPORT EQUIPMENT:

Power Source: This is a manually operated tool.

Accessories: This tool is stored in the reversible geological tool container and is used in conjunction with the tool container and the orthogonal clinometer and sun gnomon assembly during survey operations.

J. FOR MORE INFORMATION REFER TO:

Bibliography: 26, 39, 47

Tool Reference: Prototype lunar geological tool kit, reversible geological container, orthogonal clinometer and sun gnomon assembly.

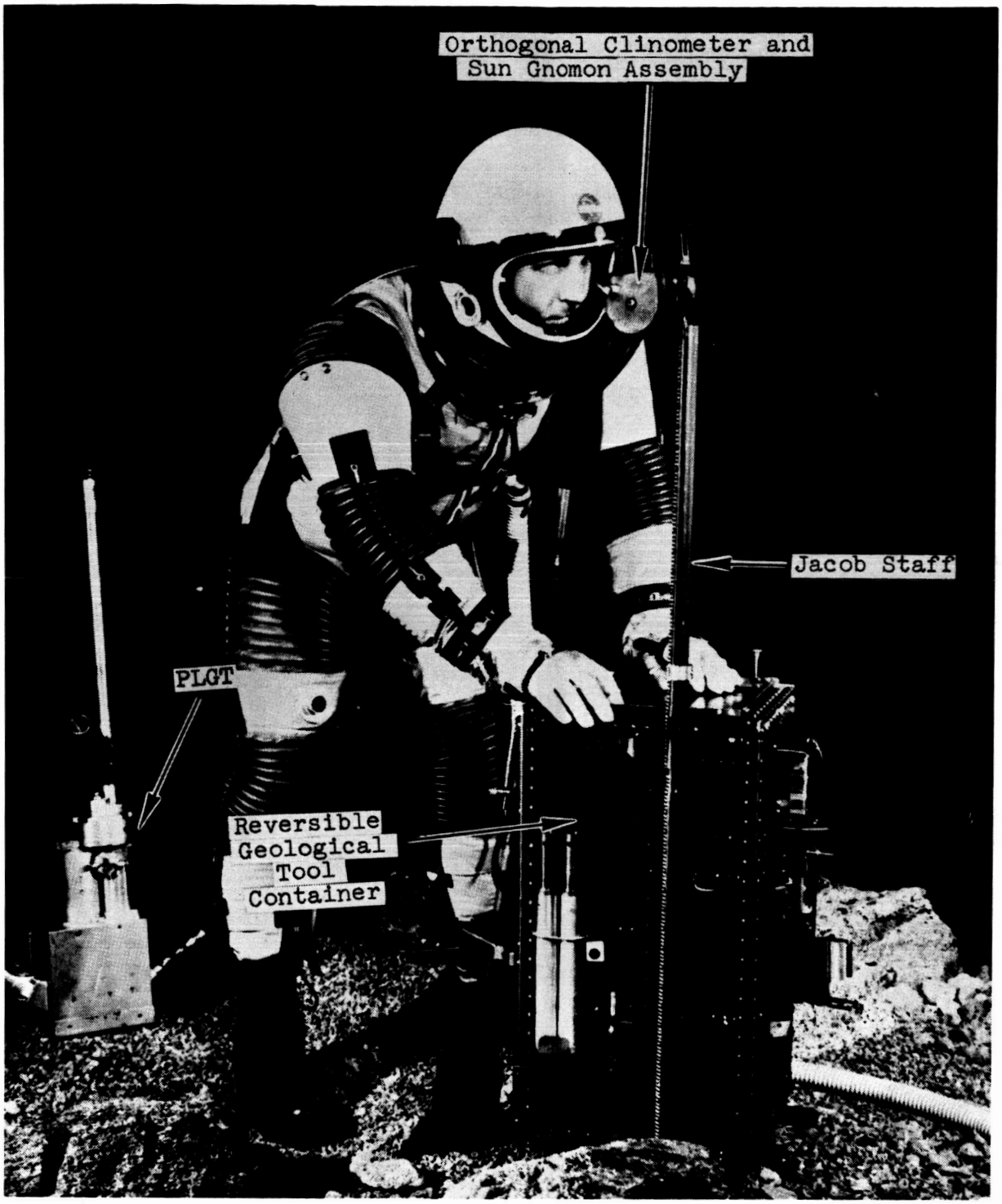

Figure 6-4. Jacob Staff. Photograph provided by Martin Marietta Corporation.

MODIFIED ABNEY LEVEL

A. PURPOSE: The modified Abney level was designed for the measurement of slopes of local topographical features and azimuths of objects on the moon relative to the horizontal projection of the sun. The primary purpose of the latter measurement, combined with a range measurement, is to locate the positions of sample acquisition relative to the LEM. These measurements can subsequently be used for plotting a geological map of the exploratory area relative to the true selenographic coordinates.

B. PREVIOUS SOLUTIONS: There have been no previous space validated systems.

C. CURRENT METHOD OF OPERATION: The modified Abney level is part of the prototype lunar geological tool kit and is stored in the reversible geological tool container. The hand-held device consists of a compass card mounted onto a standard Abney level, and a rotating mirror assembly attachment. When the mirror support arm is raised to its maximum pivot position, the cylindrical mirror (polished metalic tube) is positioned directly over a hole in the center of the compass card. A second mirror is mounted within the body of the Abney level.

To obtain the slope of a topographic feature, the Abney level is operated in the standard manner. The rear sight and horizontal hairline in the forward sight are manually aligned in an orientation parallel to the topographic feature. The clinometer pointer with attached bubble assembly is appropriately rotated until the bubble image on the internal mirror indicates a level condition. Slope of the topographic feature is then read directly from the clinometer pointer.

To measure the azimuth of the LEM relative to the horizontal sun projection, the clinometer pointer is set at zero, and the instrument is held in a horizontal plane as indicated by the bubble level. The LEM is aligned with the vertical hairline, and the mirror assembly is rotated until maximum brightness is observed on the appropriate internal mirror. An approximate alignment of the rotating mirror support arm to a position facing the sun is desirable prior to the final fine adjustment using the maximum brightness indication on the internal mirror. After the final adjustment for maximum brightness is completed, the angle between the horizontal projection of the sun and the LEM is read directly from the compass card, and is transmitted verbally to the time-based tape recorder. The landing coordinates of the LEM and the sun position at the time of survey are used in the calculations required for transforming this angular data into a true lunar bearing for the astronaut's position.

D. RELATED FUNCTIONAL CATEGORIES: None.

E. PERFORMANCE: An azimuth measurement accuracy verification test was performed using a K and E transit as a reference. Seven measurements from 66° to 317° (1.15 to 5.53 rad) were taken and the

greatest deviation between the two instruments was 1° (0.0175 rad).

F. ADVANTAGES AND DISADVANTAGES: Unavailable.

G. STATUS:

	Projected Date	Actual Date	Posted Date
Prototype Model	1965	1965	1969

Developer:
D. S. Crouch (Program Technical Director)
Martin Marietta Corporation, Denver Division
Denver, Colorado 80201

Sponsor:
National Aeronautics and Space Administration
Manned Space Flight Center
Houston, Texas 77058
Contract No. NAS 9-3647

H. SPECIFICATIONS:

Weight. . . . . 0.498 lb (0.226 kg)

I. SUPPORT EQUIPMENT:

Power Source: This is a manually operated tool.

Accessories: This tool is stored in the reversible geological tool container.

J. FOR MORE INFORMATION REFER TO:

Bibliography: 26, 29, 47

Tool Reference: Prototype lunar geological tool kit, reversible geological tool container, orthogonal clinometer and sun gnomon.

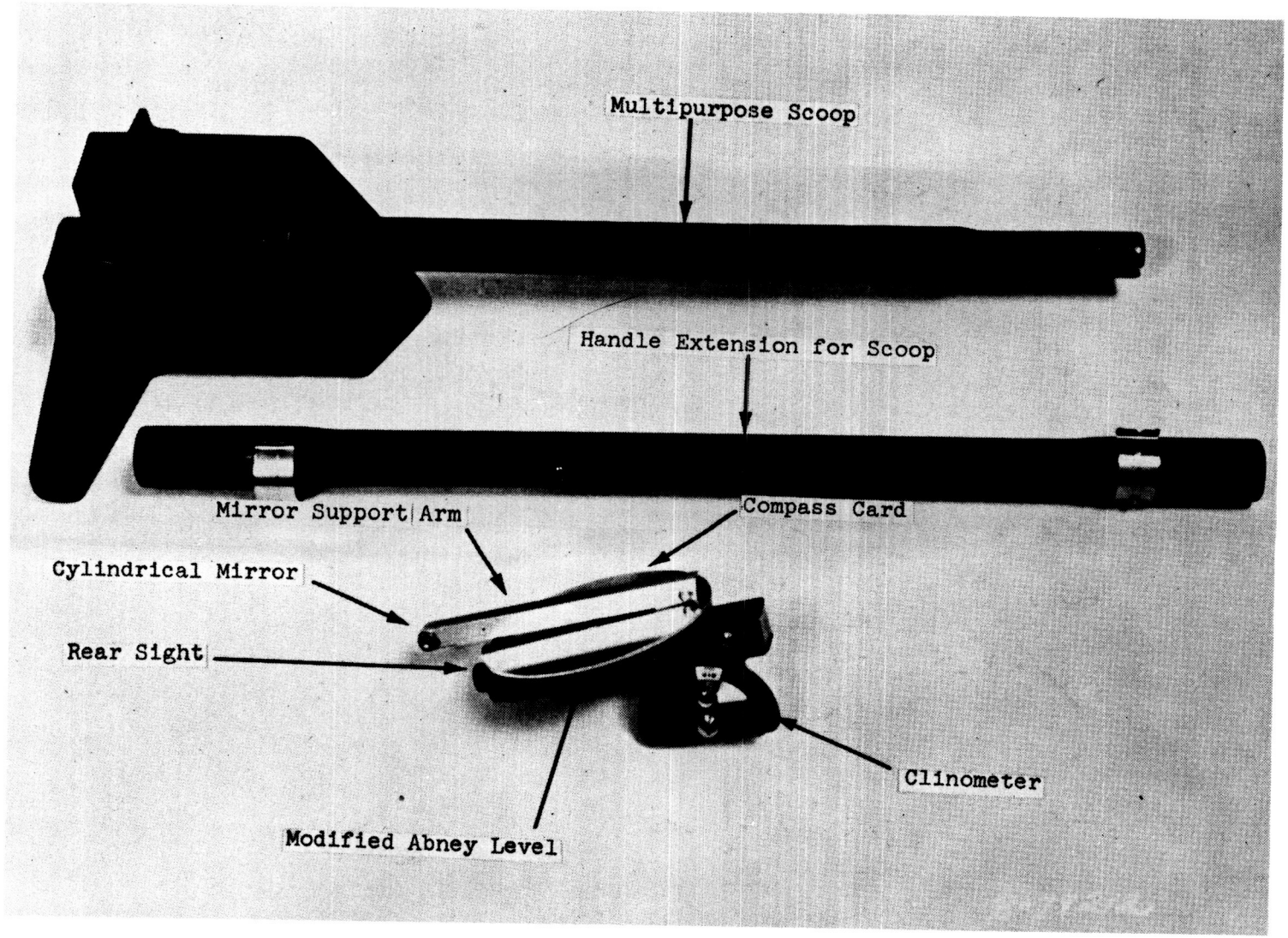

Figure 6-5. Modified Abney Level and Multipurpose Scoop. Photograph provided by Martin Marietta Corporation.

MULTIPURPOSE GEOLOGICAL HAMMER

A. PURPOSE: The multipurpose geological hammer was developed for hammering, chopping (hatchet-type function) and picking (broad-blade pick-type function) lunar rock specimens.

B. PREVIOUS SOLUTIONS: There have been no previous space validated lunar geological hammers.

C. CURRENT METHOD OF OPERATION: This tool is part of the prototype lunar geological tool kit and is designed to perform essentially the same functions on the moon that a standard commercial sampling hammer performs on earth. However, several design improvements were deemed necessary for this prototype model in order to assure astronaut utilization. The weight of the lunar hammer head was increased from the standard 1.0 - 1.5 lb (0.45 - 0.68 kg) to 3.9 lb (1.8 kg). This enables the astronaut to procure specimens from a hard rock outcrop with fewer high-energy blows. A reversible blade was designed and fabricated which can be manually oriented in the tool head to function either as a hatchet or as a broad-blade pick. Two leveled slots and locking levers orthogonally located on one end of the tool head permit engagement of the blade in the desired position. The other end of the tool head functions as a standard hammer. To minimize stooping or kneeling by the astronaut while hammering boot-level samples, an adjustable length (18 in. to 28 in. (46 cm to 71 cm)) handle was designed into the tool. Adjustment is accomplished by sliding the inner and outer elliptical tubes to the desired length and inserting the spring release position locking pin into the appropriate locking holes. The convoluted handle was fabricated from a mold form-fitted to a state-of-the-art, medium size, right hand glove. A handle grip guard was included to reduce the possibility of "knuckle rapping" while hammering, and to aid the astronaut in holding the hammer while relaxing the hand.

D. RELATED FUNCTIONAL CATEGORIES: 2, 3

E. PERFORMANCE: Field tests have shown that the hatchet configuration was more effective for shaving pumice samples than the more conventional broad blade pick configuration. The latter configuration should be deleted in later prototypes. The positive locking pin for handle adjustment should be replaced by a permanently mounted, spring loaded locking pin on the outer tubular member.

F. ADVANTAGES AND DISADVANTAGES: Unavailable.

G. STATUS:

	Projected Date	Actual Date	Posted Date
Prototype Model	1965	1965	1969

Developer:
D. S. Crouch (Program Technical Director)
Martin Marietta Corporation, Denver Division
Denver, Colorado 80201

Sponsor:
National Aeronautics and Space Administration
Manned Spacecraft Center
Houston, Texas 77058
Contract No. NAS 9-3647

H. SPECIFICATIONS:

Handle length	18-28 in. (46-71 cm)
Head weight	3.9 lb (1.8 kg)
Total weight	6.7 lb (3.0 kg)
Material	Steel

I. SUPPORT EQUIPMENT:

Power Source: This is a manually operated tool.

Accessories: This tool is stored in the reversible geological tool container.

J. FOR MORE INFORMATION REFER TO:

Bibliography: 26, 29, 47

Tool Reference: Prototype lunar geological tool kit, reversible geological tool container.

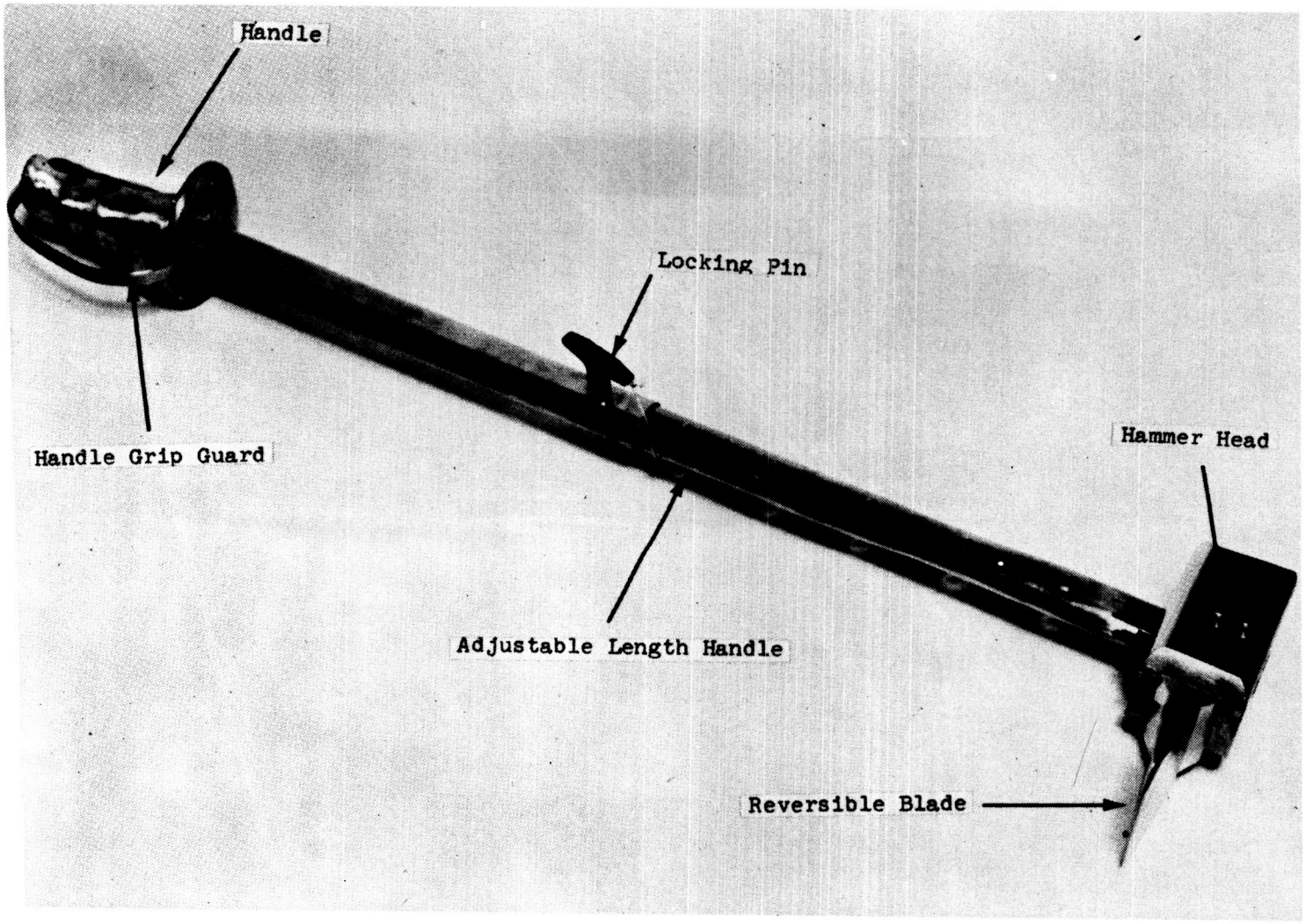

Figure 6-6. Multipurpose Geological Hammer. Photograph provided by Martin Marietta Corporation.

MULTIPURPOSE SCOOP

A. PURPOSE: The multipurpose scoop was designed with a multi-positionable bowl for the scooping of loose geological samples. Four attachments can be used with the basic scoop assembly as follows: two sample tube corers can be screw-twisted or hammer-driven into a relatively soft surface such as pumice, a chisel attachment can be used for prying or scribing marks in rocks, and a small wire brush attachment can be used for removing light dust layers from lunar surface specimens.

B. PREVIOUS SOLUTIONS: There have been no previous space validated lunar scoops.

C. CURRENT METHOD OF OPERATION: The multipurpose scoop is part of the prototype lunar geological tool kit and is stored and carried in the reversible geological tool container. The scoop portion of the tool is permanently attached to its tubular handle by a swivel bolt. An adjustable knurled nut permits the scoop to be rotated and locked in one of four positions for storage, or for operation as a hoe, scoop, or spade. A quick-disconnect handle extension is provided to increase the operating height of the tool.

Tool accessories can be attached to the tubular handle of the scoop by means of a universal quick disconnect fitting at the opposite end of the handle from the scoop. When a sample tube corer is placed there, the scoop "extension ears" are used as a twist handle to rotate the sample tube corer into the surface. A solid plug insert embedded in the scoop end of the tubular handle facilitates hammer driving of the sample tube corer if desired. The chisel attachment is used for prying of larger specimens which may be embedded in the lunar surface. The chisel and geological hammer can also be used for scribing small orientation marks on surface specimens prior to retrieval. The small brush attachment is used for removing light dust layers from lunar surface specimens. The device may also be hand-held for dusting small specimens.

D. RELATED FUNCTIONAL CATEGORIES: 2

E. PERFORMANCE: Field tests with the scoop have shown that it is effective for scooping specimens from dust and assorted rubble. The sample drive tubes were effective for coring and retaining soft materials such as pumice to a depth of at least 6 in. (15.2 cm). The core of the pumice required 6-8 revolutions of the tool accompanied by approximately 10 lb (44.5 N) of axial force.

F. ADVANTAGES AND DISADVANTAGES: Unavailable.

G. STATUS:

	Projected Date	Actual Date	Posted Date
Prototype Model	1965	1965	1969

Developer:
D. S. Crouch (Program Technical Director)
Martin Marietta Corporation, Denver Division
Denver, Colorado 80201

Sponsor:
National Aeronautics and Space Administration
Manned Spacecraft Center
Houston, Texas 77058
Contract No. NAS 9-3647

H. SPECIFICATIONS:

Basic scoop weight	2.9 lb	(1.31 kg)
Sample tube corer #1 weight	0.57 lb	(0.26 kg)
Sample tube corer #2 weight	0.57 lb	(0.26 kg)
Chisel weight	0.52 lb	(0.24 kg)
Brush weight	0.44 lb	(0.20 kg)
Total weight	5.0 lb	(2.27 kg)

I. SUPPORT EQUIPMENT:

Power Source: This is a manually operated tool.

Accessories: There are two sample tube corers, a chisel attachment and a brush attachment. The tool is stored in the reversible geological tool container.

J. FOR MORE INFORMATION REFER TO:

Bibliography: 26, 29, 47

Tool Reference: Prototype lunar geological tool kit, reversible geological tool container, multipurpose geological hammer, powered lunar geologist tool.

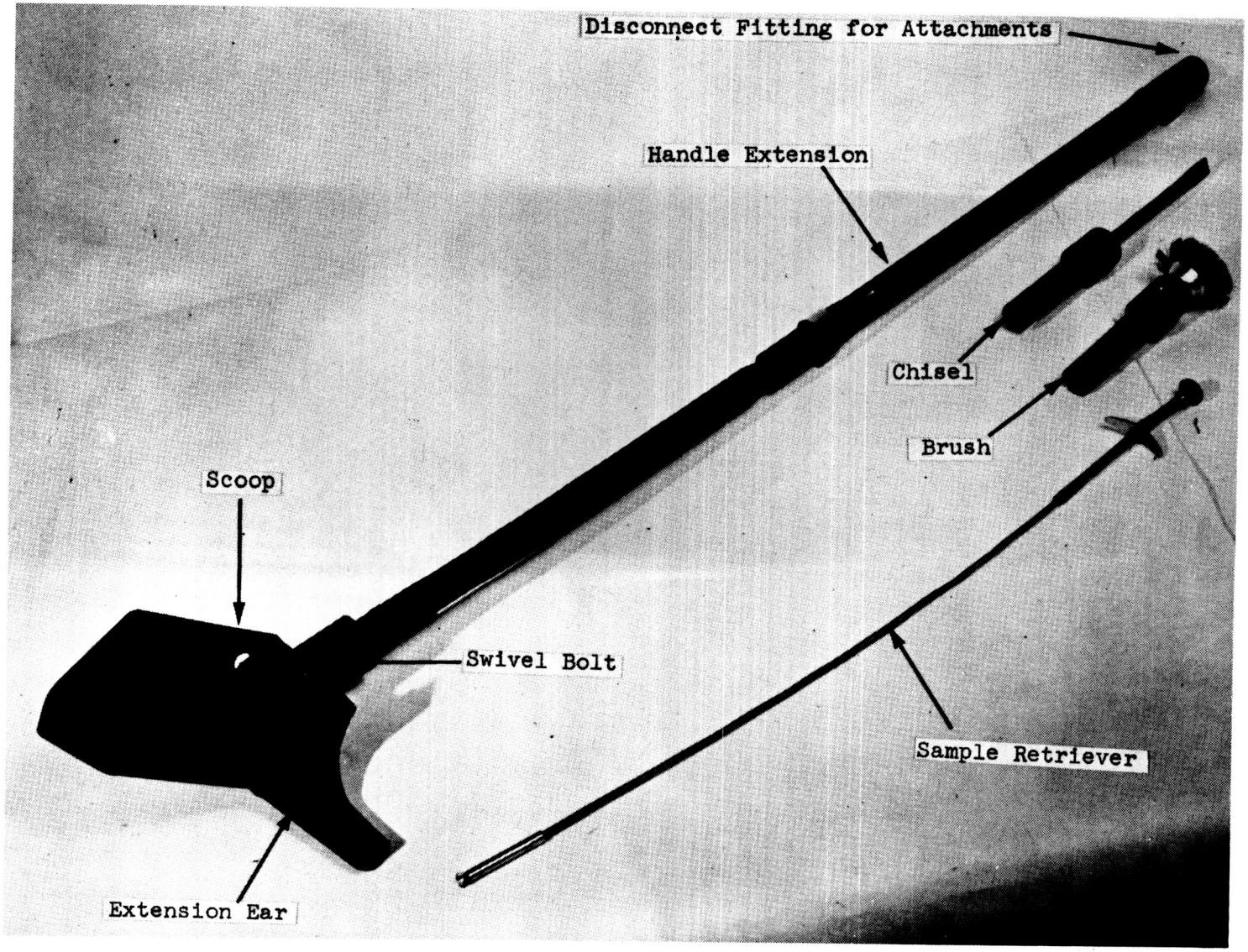

Figure 6-7. Multipurpose Scoop and Sample Retriever. Photograph provided by Martin Marietta Corporation.

ORTHOGONAL CLINOMETER AND SUN GNOMON

A. PURPOSE: The clinometer and sun gnomon assembly was developed to measure slopes of local topographical features and azimuths of objects relative to the horizontal projection from the sun. The primary purpose of the azimuth measurement, combined with the range measurement, is to pinpoint the positions of sample acquisition relative to the LEM. These measurements can also be used for plotting a geological map of the exploratory area relative to the true selenographic coordinates.

B. PREVIOUS SOLUTIONS: There have been no previous space validated systems.

C. CURRENT METHOD OF OPERATION: This instrument is part of the prototype lunar geological tool kit and it is stored in the reversible geological tool container. It contains five major elements: (1) sighting bar and cross hair assembly, (2) 360° (6.28 rad) compass card, (3) adjustable height sun gnomon, (4) two orthogonally oriented, top reading clinometers capable of measuring positive and negative angles from 0° to 90° (0 to 1.57 rad), and (5) two "pitch" and "roll" control levers which permit adjustment and locking of the entire assembly at any desired angle relative to the local gravitational vector. The roll control and locking device is also used for mounting the instrument to the Jacob staff.

To obtain a slope measurement of a topographical feature (rock flow, crater wall, etc.) the Jacob staff (restrained by tool box) and attached instrument assembly are positioned at the desired location. The sighting bar cross hair supports are raised to their vertical positions, and the instrument assembly is manually leveled in the "roll" plane (zeroed on the roll clinometer) and locked in position using the corresponding control lever. The pitch control lever is loosened, and the entire instrument assembly is aligned parallel to the slope of the topographical feature by sighting along the two horizontal cross hairs. The instrument assembly is locked in the "pitch" plane, and the slope of the topographic feature is read directly from the pitch clinometer.

To obtain an azimuth measurement, the instrument assembly is initially leveled in the pitch and roll planes by zeroing the corresponding clinometers. The sun gnomon is elevated and rotated to the appropriate position such that the sun shadow (cast by the vertical hairline in the gnomon window) is superimposed on the compass card scale. The sighting bar is manually rotated until the vertical hairlines are aligned with the desired object (LEM). The angles intercepted by the sun shadow and horizontal sighting bar hairline are read by the astronaut and verbally transmitted to the time-based tape recorder.

The two readings obtained from the compass card during an azimuth measurement serve as a means to obtain the included angle of the survey point between the sun shadow and the LEM. The landing coordinates of the LEM and the sun position at the

time of survey are used in the calculations required for transforming the angular data into a true lunar bearing.

D. RELATED FUNCTIONAL CATEGORIES: None.

E. PERFORMANCE: An accuracy verification test was performed on both orthogonal clinometers using a calibrated standard as reference. The clinometers were checked in 5° (0.0873 rad) increments in both the clockwise and counterclockwise directions up to a maximum of 45° (0.785 rad). Maximum error encountered during the test was 1.0°(0.0175 rad). Average error for 40 measurements was 0.3° (0.0052 rad).

An azimuth measurement accuracy verification test was performed using a K & E transit as a reference. Six measurements, from 66° to 317° (1.15 to 5.53 rad) were taken and the greatest deviation between the two instruments was 1.6° (0.028 rad).

F. ADVANTAGES AND DISADVANTAGES: Unavailable.

G. STATUS:

	Projected Date	Actual Date	Posted Date
Prototype Model	1965	1965	1969

Developer:
D. S. Crouch (Program Technical Director)
Martin Marietta Corporation, Denver Division
Denver, Colorado 80201

Sponsor:
National Aeronautics and Space Administration
Manned Space Flight Center
Houston, Texas 77058
Contract No. NAS 9-3647

H. SPECIFICATIONS:

Weight. . . . . 0.709 lb (0.322 kg)

I. SUPPORT EQUIPMENT:

Power Source: This is a manually operated tool.

Accessories: This tool is stored in the reversible geological tool container and uses the tool container and the Jacob staff for support during surveying operations.

J. FOR MORE INFORMATION REFER TO:

Bibliography: 26, 29, 47

Tool Reference: Prototype lunar geological tool kit, reversible geological tool container, Jacob staff, modified Abney level.

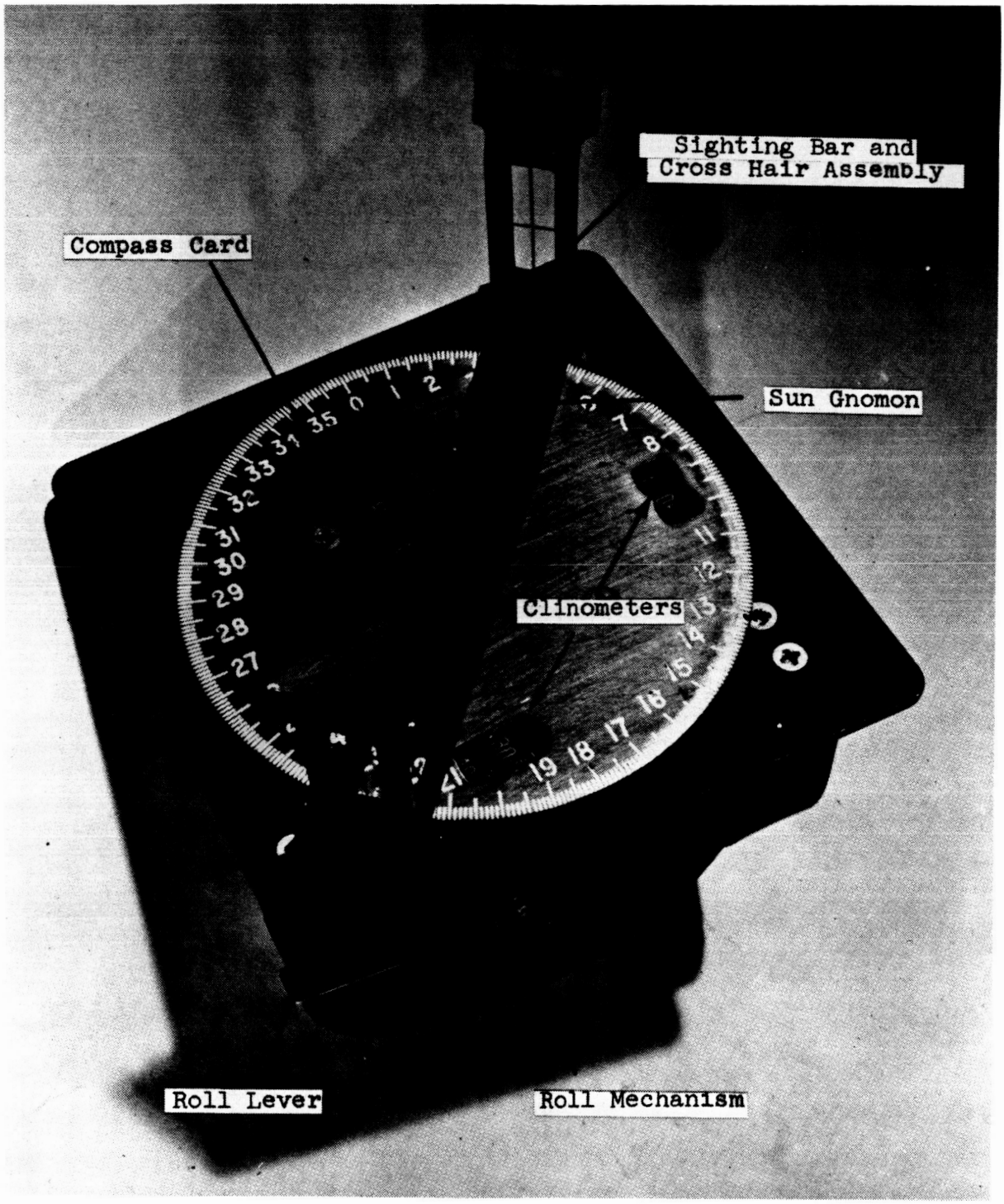

Figure 6-8. Orthogonal Clinometer and Sun Gnomon.
Photograph provided by Martin Marietta Corporation.

POWERED LUNAR GEOLOGIST TOOL (PLGT)

A. PURPOSE: The PLGT was developed as a battery powered tool capable of chiseling or coring any lunar rock material ranging in hardness from dense basalt to pumice.

B. PREVIOUS SOLUTIONS: There have been no previous space validated power lunar surface drill systems.

C. CURRENT METHOD OF OPERATION: The PLGT is a power tool designed for use by a single astronaut obtaining lunar rock material. It can be used in two modes. In one mode, it is used to obtain lunar core samples by driving core tubes into the ground. In the other mode, it is used to power a chisel used to break up rock samples.

The tool is part of the prototype lunar geological tool kit and it is stored and carried, disassembled into two parts, in the reversible geological tool container. Assembly of the tool is rapidly accomplished by connecting the two sections together and locking them with a large knurled coupling nut. Attachment of a hard rock rotary bit, a soft rock rotary bit or a chisel bit is accomplished by means of a quick disconnect fastener at the end of the torque tube at the bottom of the tool.

The PLGT is restrained by the astronaut by means of three handles. The rock coring mode requires the astronaut to restrain the tool by the two upper handles located on the battery case at the top of the tool. The astronaut then has easy access to the "on-off" switch located in the right handle and the percussor energy level control knob located on the percussor housing below the battery case. The rock chipping mode requires the placement of the right hand on the switch handle, and the left hand on the lower auxiliary handle located on the torque tube housing below the percussor. A transparent debris shield is provided at the end of the torque tube just above the chisel attachment to prevent rock fragments from striking the spacesuit helmet while the astronaut is in this position.

The flow of power in the tool is simple and ingenious. A rechargeable silver-zinc battery provides power for an electric motor which operates at 167 rps. A triple reduction spur gear assembly (23.7:1 reduction ratio) transmits rotary torque to the spline drive on the torque tube which in turn rotates the core bit. A slip clutch is incorporated in the final gear to facilitate speed variation (if required) and to limit the maximum reactive torque to 12 ft-lb (16.3 m-N) which can be safely controlled by the astronaut. A second reduction gear drive train (7.9:1) transmits the rotary torque to a two-lobe rotary cam in the percussor which lifts and drops a spring-loaded hammer on the torque tube twice per revolution and provides high energy blows to the core bit. When the chisel attachment is used, a splineless shank on the torque tube is used to eliminate rotary motion and the chisel receives only the percussion blows required for rock chipping.

D. RELATED FUNCTIONAL CATEGORIES: 2, 3

E. PERFORMANCE: The PLGT is capable of drilling a 1 in. (2.54 cm) inside diameter core bit with a 0.140 in. (0.356 cm) cutting kerf to at least a depth of 3.28 ft (1 m) at a maximum rate of 0.7 in./min (0.030 cm/sec) in dense basalt and 20 in./min (0.85 cm/sec) in pumice.

F. ADVANTAGES AND DISADVANTAGES: In rotary-percussion drilling the axial bit pressure and rotary torque requirements are considerably less than those required for rotary drilling.

G. STATUS:

	Projected Date	Actual Date	Posted Date
Prototype Model	1965	1965	1969

Developer:
D. S. Crouch (Program Technical Director)
Martin Marietta Corporation, Denver Division
Denver, Colorado 80201

Sponsor:
National Aeronautics and Space Administration
Manned Spacecraft Center
Houston, Texas 77058
Contract No. NAS 9-3647

H. SPECIFICATIONS:

Operating voltage	21 V
Operating current	8.8 A
Battery power capacity	300 W-hr
PLGT weight	28.2 lb (12.8 kg)
Percussion bit 1 weight	0.628 lb (0.285 kg)
Percussion bit 2 weight	0.633 lb (0.287 kg)
Diamond Caret bit weight	0.333 lb (0.151 kg)
Chisel weight	0.624 lb (0.283 kg)

I. SUPPORT EQUIPMENT:

Power Source: A rechargeable, silver-zinc battery is an integral part of the tool. See the Specifications.

Accessories: Three core bit and one chisel attachment are used with the tool.

J. FOR MORE INFORMATION REFER TO:

Bibliography: 26, 29, 47

Tool Reference: Apollo lunar surface drill, prototype lunar geological tool kit, reversible geological tool container.

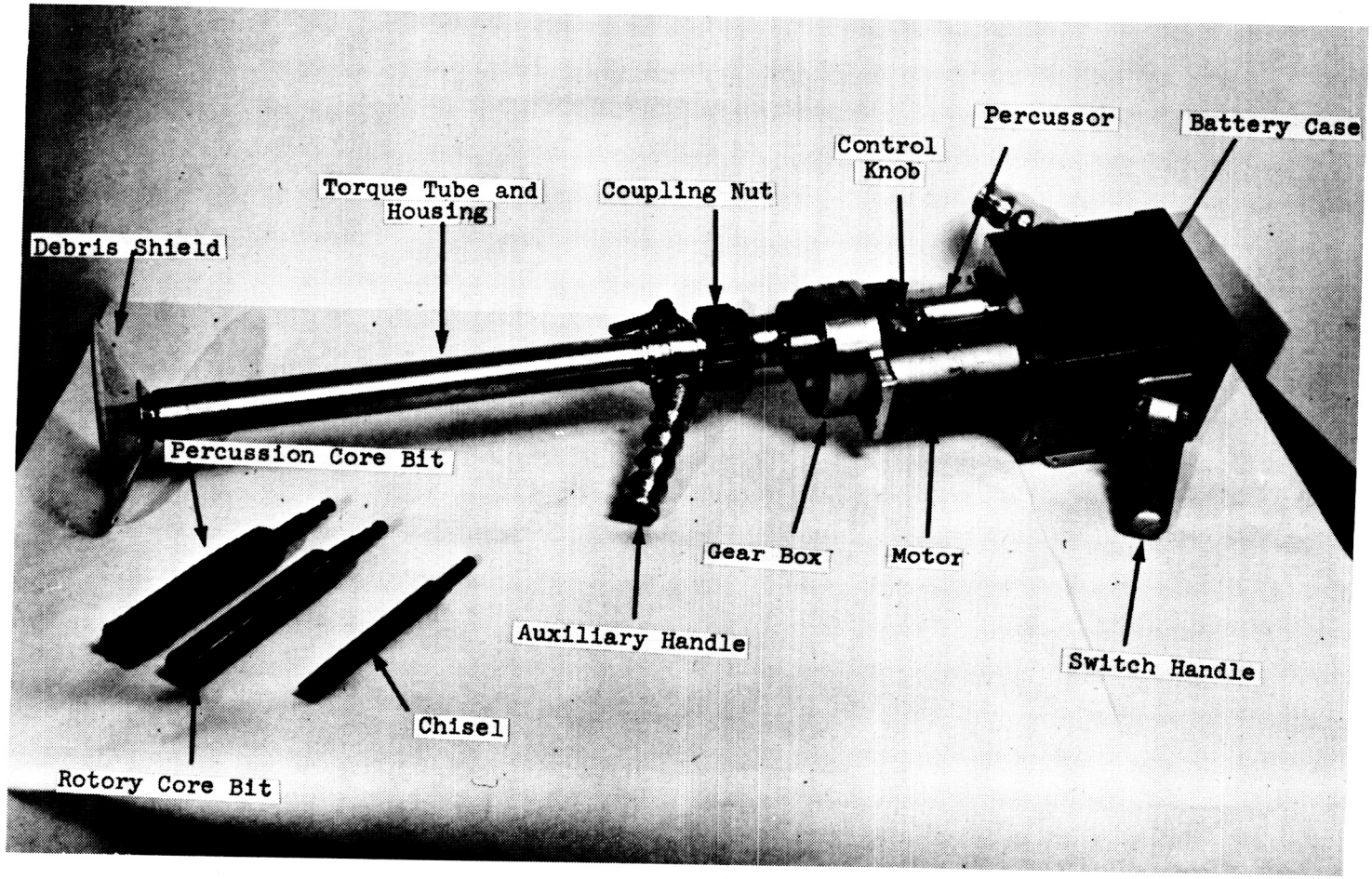

Figure 6-9. Powered Lunar Geologist Tool (PLGT).
Photograph provided by Martin Marietta Corporation.

SAMPLE RETRIEVER

A. PURPOSE: The sample retriever was designed as a small, single-hand operated device for picking up loose surface specimens or core samples left in the drill hole produced by the powered lunar geologist tool.

B. PREVIOUS SOLUTIONS: There have been no previous space validated systems.

C. CURRENT METHOD OF OPERATION: The sample retriever is part of the prototype lunar geologist hand tool and is stored in the reversible geologist tool container. It is a forceps-type instrument. Depression of a spring-restrained plunger located at the top of the handle results in the extension and expansion of four orthogonally oriented "claw-fingers" from the opposite end of the tool. The expanded claw-fingers are oriented over the sample to be retrieved, the spring-restrained plunger is released, and the claw-fingers tightly grip the sample until released into a sample bag. The claw-fingers of the tool can be expanded to a maximum diameter of 1 in. (2.54 cm). This is sufficient for retrieval of PLGT cores, or loose surface samples irregularly shaped with protrusions and depressions.

D. RELATED FUNCTIONAL CATEGORIES: 7

E. PERFORMANCE: The sample retriever, with its extendable "claw-fingers" was the only tool in the prototype lunar geologist tool kit effective for retrieving: (1) a hammered or chiseled specimen that had dropped into a small crevice, and (2) a sample from a PLGT drilled core hole.

F. ADVANTAGES AND DISADVANTAGES: Unavailable.

G. STATUS:

	Projected Date	Actual Date	Posted Date
Prototype Model	1965	1965	1969

Developer:
D. S. Crouch (Program Technical Director)
Martin Marietta Corporation, Denver Division
Denver, Colorado 80201
Contract No. NAS 9-3647

Sponsor:
National Aeronautics and Space Administration
Manned Spacecraft Center
Houston, Texas 77058
Contract No. NAS 9-3647

H. SPECIFICATIONS:

Length	22 in. (55.8 cm)
Weight	0.187 lb (0.085 kg)

I. SUPPORT EQUIPMENT:

Power Source: This is a manually operated tool.

Accessories: This tool is stored in the reversible geological tool container.

J. FOR MORE INFORMATION REFER TO:

Bibliography: 26, 29, 47

Tool Reference: Prototype lunar geological tool kit, reversible geological tool container.

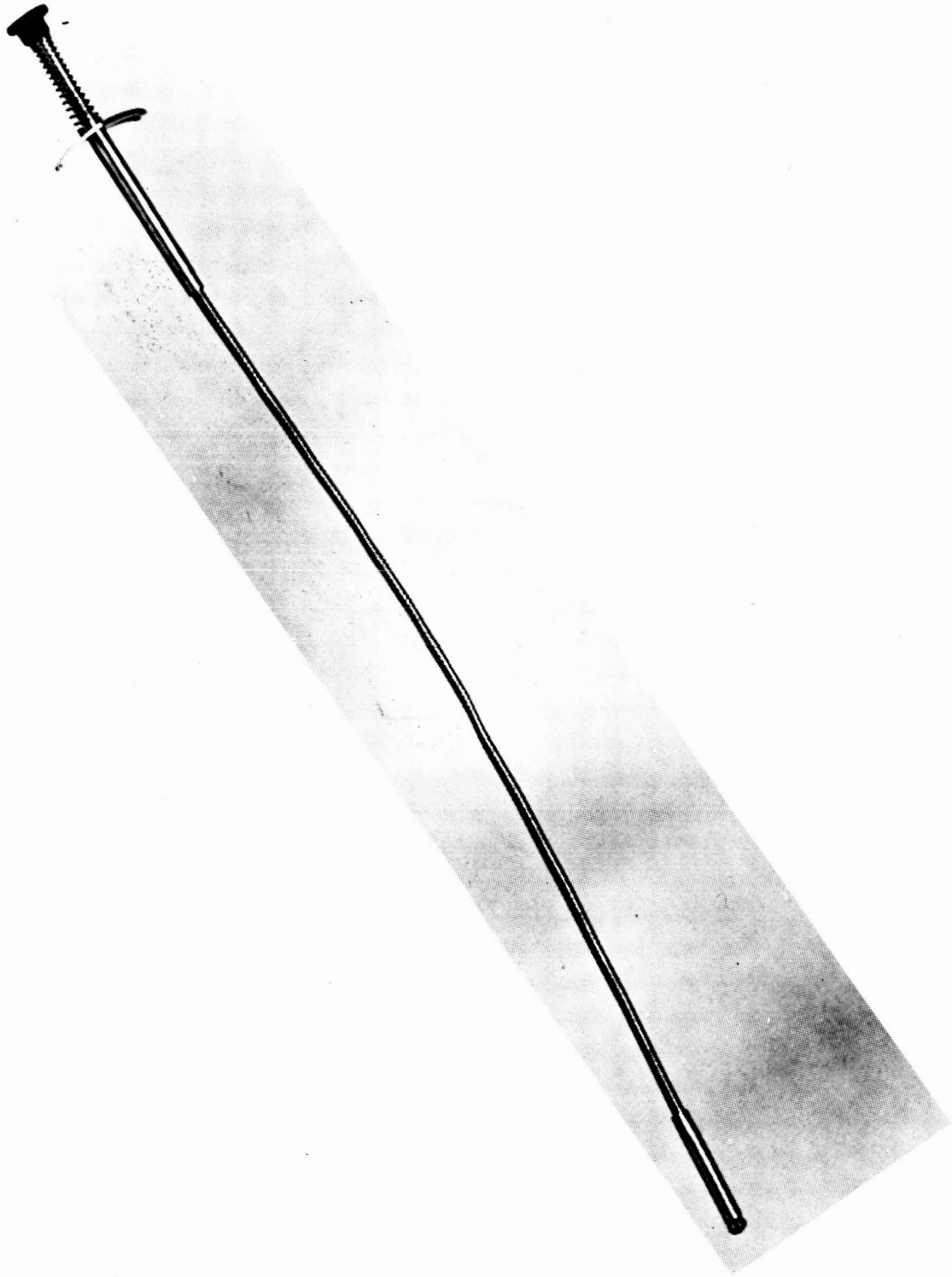

Figure 6-10. Sample Retriever. Photograph provided by the Manned Spacecraft Center.

SAMPLE STOWAGE BAG

A. PURPOSE: The sample stowage bag was designed to facilitate handling and weighing of individually packaged lunar surface samples.

B. PREVIOUS SOLUTIONS: There have been no previous space validated systems.

C. CURRENT METHOD OF OPERATION: The sample storage bag is part of the prototype lunar geological tool kit and is stored in the reversible geological tool container. It is fabricated from vinyl covered fabric, and is shaped to conform with the internal dimensions of the tool box of the lunar geological tool kit. The bag is snap-fastened to the inner walls of the tool box after the box has been unfolded to the lunar surface configuration. Four flaps are sewn to one side of the sample stowage bag at 5 in. (12.7 cm) intervals from the bottom. After the lower five inches of the bag is filled with specimens, the lower flap is fastened to the opposite side of the bag by means of a "velcro" zipper. After the second five inches of the bag is filled with specimens, the second flap is closed. In this manner, the "hammock-type" flaps provide support for each group of samples to prevent excessive loading and bumping of the lower-level samples. When a sample is to be weighed, the sample stowage bag containing the sample is placed on the sample weighing device.

D. RELATED FUNCTIONAL CATEGORIES: 7

E. PERFORMANCE: A laboratory test indicated the sample bag functioned satisfactorily when used by a space suited technician.

F. ADVANTAGES AND DISADVANTAGES: Unavailable.

G. STATUS:

	Projected Date	Actual Date	Posted Date
Prototype Model	1965	1965	1969

Developer:
D. S. Crouch (Program Technical Director)
Martin Marietta Corporation, Denver Division
Denver, Colorado 80201

Sponsor:
National Aeronautics and Space Administration
Manned Spacecraft Center
Houston, Texas 77058
Contract No. NAS 9-3647

H. SPECIFICATIONS:

Opening length	1 ft (30.5 cm)
Opening width	1 ft (30.5 cm)
Depth	2 ft (61.0 cm)
Weight	1.3 lb (0.59 kg)

I. SUPPORT EQUIPMENT:

Power Source: This is a manually operated tool.

Accessories: The sample stowage bag is stored in the reversible geological tool container and is used in conjunction with the sample weighing device and the tool container.

J. FOR MORE INFORMATION REFER TO:

Bibliography: 26, 29, 47

Tool Reference: Prototype lunar geological tool kit, reversible geological tool container, sample weighing device.



Figure 6-11. Sample Stowage Bag. Photograph provided by Martin Marietta Corporation.

SAMPLE WEIGHING DEVICE

A. PURPOSE: The sample weighing device is part of the prototype lunar geological tool kit and it is a lightweight beam type scale designed for gross weighing of lunar surface specimens to insure that the 80 lb (36.4 kg) return payload of the LEM is not exceeded.

B. PREVIOUS SOLUTIONS: There have been no previous space validated systems.

C. CURRENT METHOD OF OPERATION: The scale is supported from a structural member of the LEM during the weighing process by the support hook. A unique self-calibration system is incorporated into the basic design of the weighing scale where the lunar surface material can be scooped into a small bag and employed as the counterbalancing weight. Using this technique, a small bag and the slide assembly (normally located on the right side of the beam) are suspended from the weighing hook (left side of beam). Lunar surface material is then scooped into the bag until the beam is balanced, as indicated by alignment of the vertical pointer. When the beam is properly balanced, the bag, lunar material, and slide assembly have an earth weight of 2.2 lb (1.0 kg), which is the required counterbalance for the lunar scale. The slide assembly and filled bag are then returned to the right side of the beam, and the rock specimens (rock box or sample bag) are suspended on the weighing hook. The slide and pointer assembly is then adjusted for a beam balance condition, and the weight of the rock specimens is read off the slide scale. The scale is calibrated in quarter-pound increments from 5 lb (2.3 kg) to 65 lb (29.5 kg) of earth weight. This scale was selected for two reasons: (1) for the final total weighing after the specimens have been packaged in the identical earth return rock boxes, and (2) for the individual weighing before the samples are removed from the carrying bag.

D. RELATED FUNCTIONAL CATEGORIES: None.

E. PERFORMANCE: A laboratory balance test was performed on the sample weighing device. The self balancing weight required to stabilize the beam in a level (horizontal) position was 2.198 lb (0.999 kg). This was within 1.0% of the theoretical 2.217 lb (1.0079 kg). Weighing device accuracy was verified by weighing four weights in the range of 5 to 20 lb (2.3 to 9.1 kg) which were subsequently checked against a standard scale. The greatest percentage deviation between the scales was 1.1%.

F. ADVANTAGES AND DISADVANTAGES: Unavailable.

G. STATUS:

	Projected Date	Actual Date	Posted Date
Prototype Model	1965	1965	1969

Developer:
D. S. Crouch (Program Technical Director)
Martin Marietta Corporation, Denver Division
Denver, Colorado 80201

Sponsor:
National Aeronautics and Space Administration
Manned Spacecraft Center
Houston, Texas 77058
Contract No. NAS 9-3647

H. SPECIFICATIONS: Unavailable.

I. SUPPORT EQUIPMENT:

Power Source: This is a manually operated tool.

Accessories: Sample storage bags are used with the tool and it is stored in the reversible geological tool container.

J. FOR MORE INFORMATION REFER TO:

Bibliography: 26, 29, 47

Tool Reference: Prototype geological tool kit, reversible geological tool container, sample storage bag.

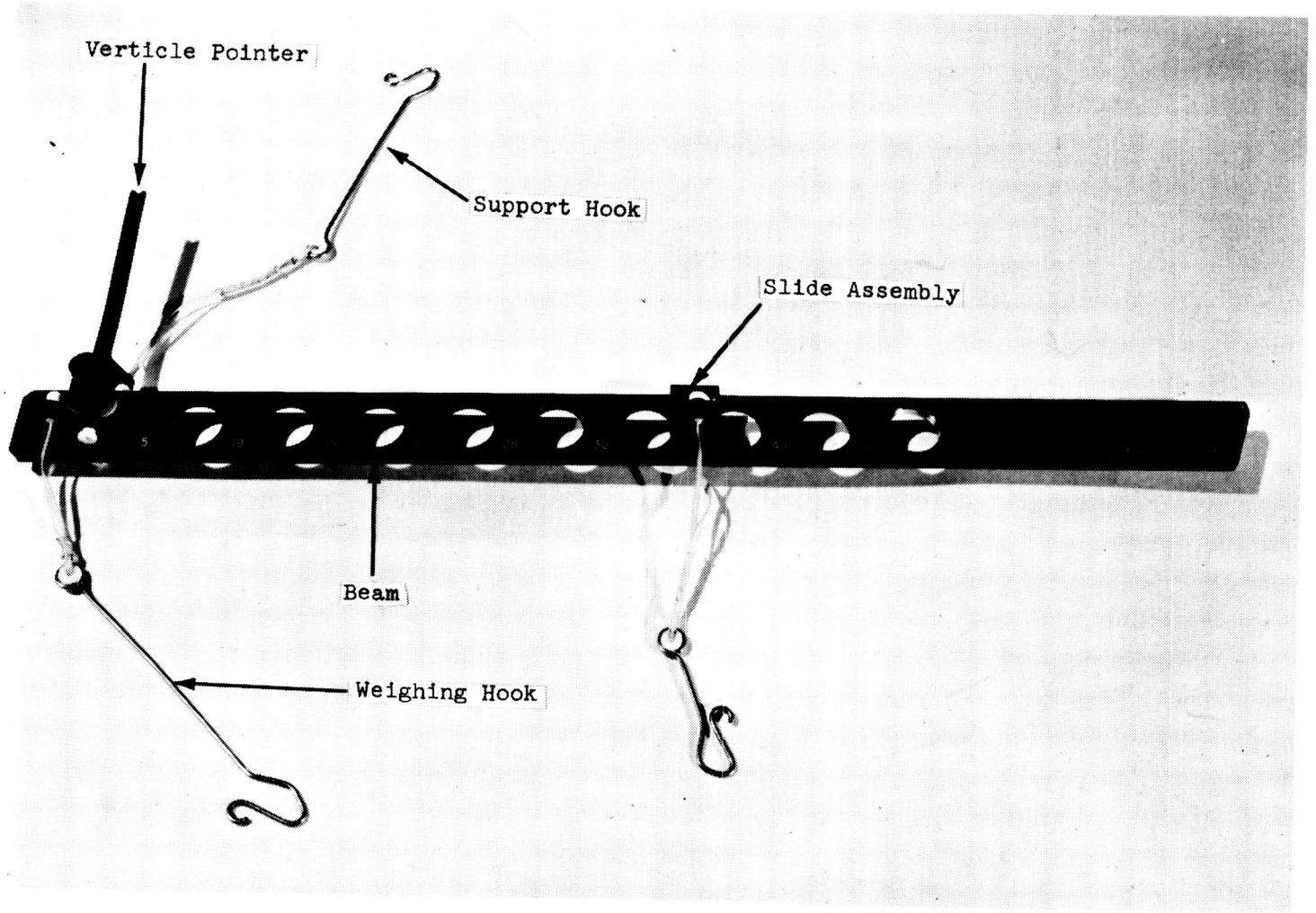

Figure 6-12. Sample Weighing Device. Photograph provided by Martin Marietta Corporation.

SECTION 7

ORIENTATION AND RESTRAINT TOOLS AND MAINTENANCE EQUIPMENT

Among the more important problems that must be overcome in order that an astronaut may perform useful work are those of orientation and restraint. The astronaut must support himself in a working attitude over the worksite and absorb the reactive torques transmitted to him from his tools. Also, his tools and associated gear must be restrained to prevent them from drifting away. There is also a need for the astronaut while wearing inflated space gloves to manipulate and position small parts such as screws, nuts and washers. Several devices to aid these tasks are discussed here.

ASTRONAUT BOOM ATTACHMENT SYSTEM

A. PURPOSE: The astronaut boom attachment system was designed to provide an astronaut a working attitude while performing EVA maintenance.

B. PREVIOUS SOLUTIONS: There have been no previous space validated astronaut attachment and stabilization systems.

C. CURRENT METHOD OF OPERATION: The astronaut boom attachment system is a back pack with three extendable booms. The booms can be extended or retracted individually or together. All the attachment system controls are mounted close to the right hip. The booms are standard STEM (Storable Tubular Extendable Member) tubes made from stainless steel strips that are pretensioned to form tubing. When the booms are in the retracted position, they are flattened and rolled onto a spool. When extension is necessary, operation of the extension crank permits the inherent strain energy of the pretensioned steel to unroll the spool under the control of a special brake. As the stem material rolls off the spool, it automatically curls into a tube. Operation of the crank in the opposite direction opens the tube as it enters the spool container, flattens it and rerolls it onto the spool. An adhesor system is required at the end of each boom to form a firm attachment to the ship.

D. RELATED FUNCTIONAL CATEGORIES: None.

E. PERFORMANCE: The system has been tested in a 5 degree-of-freedom simulator. It withstood a 45 ft-lb (63 m-N) torque at a boom extension of 2.75 ft (0.838 m).

F. ADVANTAGES AND DISADVANTAGES: The torques applied with a cranking motion were found to create an undesirable amount of instability. It was recommended that future systems be motorized. It was analytically determined that a new Bi-STEM boom principle will produce stronger tubes and increase the systems reaction absorbing capability fourfold.

G. STATUS:

	Projected Date	Actual Date	Posted Date
Prototype Model	1967	1967	1969

Developer:
J. D. Mac Naughton
The De Havilland Aircraft of Canada Limited
Special Products and Applied Research Division
SPAR Aerospace Products Limited
Box 6022, Toronto International Airport
Ontario, Canada

SPONSOR:
United States Air Force
Air Force Aero Propulsion Laboratory
Research and Technology Division
Air Force Systems Command
Wright-Patterson Air Force Base, Ohio 45433
Contract No. AF 33(615) 2724

H. SPECIFICATIONS:

Frame:

Height	36 in.	(91.4 cm)
Width	20 in.	(50.8 cm)
Thickness	1.5 in.	(3.81 cm)

Control Box:

Length	18 in.	(45.7 cm)
Diameter	6.5 in.	(16.5 cm)

Spool Box:

Length	9 in.	(22.8 cm)
Height	5 in.	(12.7 cm)
Width	4 in.	(10.2 cm)

Boom:

Sheet width	3 in.	(7.6 cm)
Sheet thickness	0.004 in.	(0.01 cm)
Boom nominal diameter	0.75 in.	(1.9 cm)

I. SUPPORT EQUIPMENT:

Power Source: This is a manually operated tool.

Accessories: An adhesive device is required at the end of each boom (e.g. Extravehicular space adhesive system).

J. FOR MORE INFORMATION REFER TO:

Bibliography: 38

Tool Reference: Extravehicular space adhesive system, extendable boom.

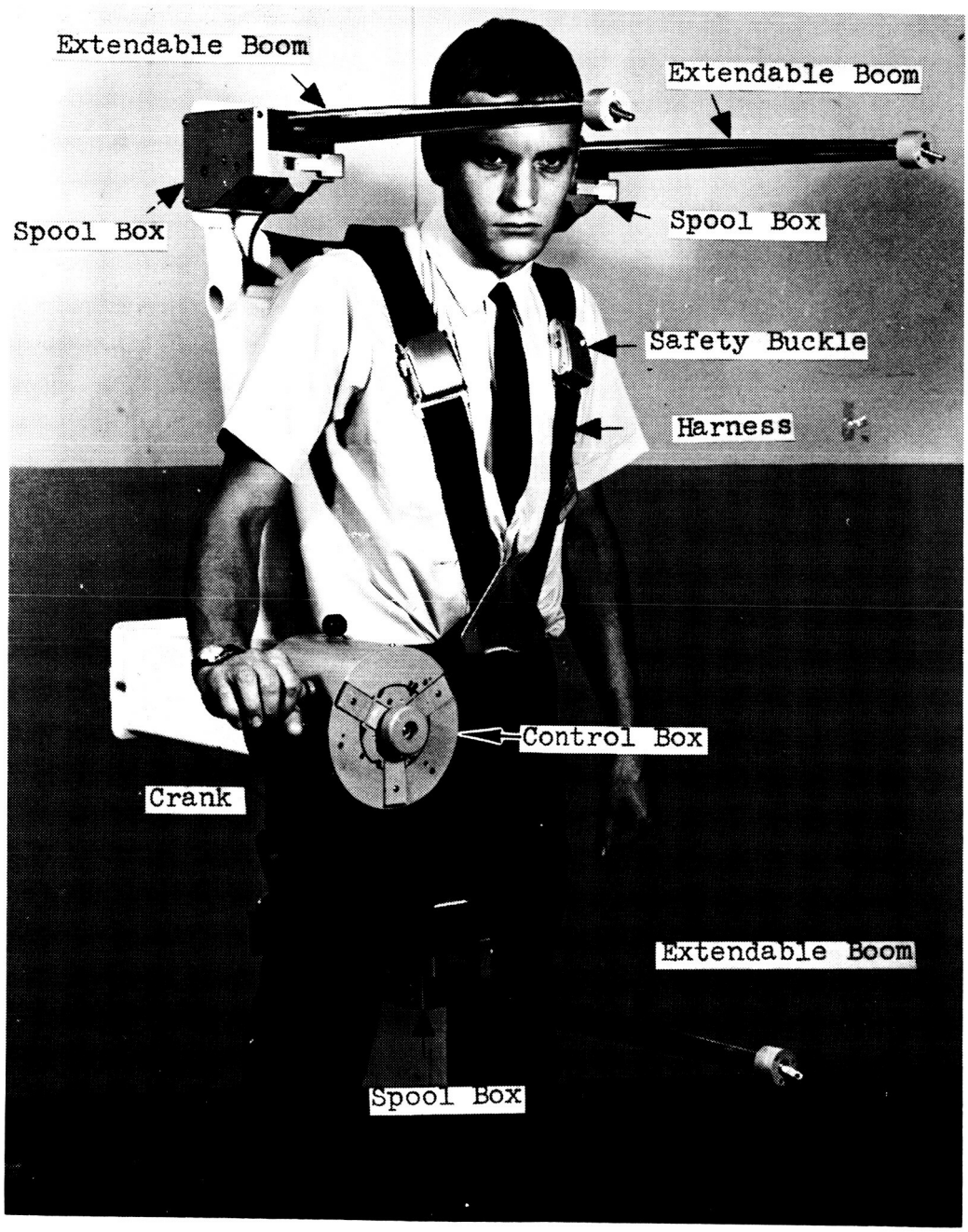

Figure 7-1. Astronaut Boom Attachment System. Photograph provided by DeHavilland Aircraft of Canada Limited.

EXTENDABLE BOOM

A. PURPOSE: The extendable boom was developed to provide a versatile working platform for in-space maintenance.

B. PREVIOUS SOLUTIONS: There have been no previous space validated systems.

C. CURRENT METHOD OF OPERATION: The extendable boom is basically a box that contains a roll of sheet metal strip that is pretensioned so that it will curl up into a tube with the aid of the guiding cone as it is pulled off the feed roller. The boom is extended by pulling out the sheet metal strip and is retracted by pushing it back into a roll in the same manner as a steel tape measure. When the boom is extended, one end of the boom can be attachef to a space vehicle and the housing on the other end can be used for working platform.

D. RELATED FUNCTIONAL CATEGORIES: None.

E. PERFORMANCE: Unavailable.

F. ADVANTAGES AND DISADVANTAGES: Unavailable.

G. STATUS:

	Projected Date	Actual Date	Posted Date
Prototype Model	1962	1962	1969

Developer:
Government Products Group
American Foundry Company
261 Madison Avenue
New York, New York

Sponsor:
Government Products Group
261 Madison Avenue
New York, New York

H. SPECIFICATIONS: Unavailable.

I. SUPPORT EQUIPMENT:

Power Source: This is a manually operated tool.

Accessories: An attachment device is required for use on the end of the boom (e.g. extravehicular space adhesive system).

J. FOR MORE INFORMATION REFER TO:

Bibliography: 19

Tool Reference: Extravehicular space adhesive system.

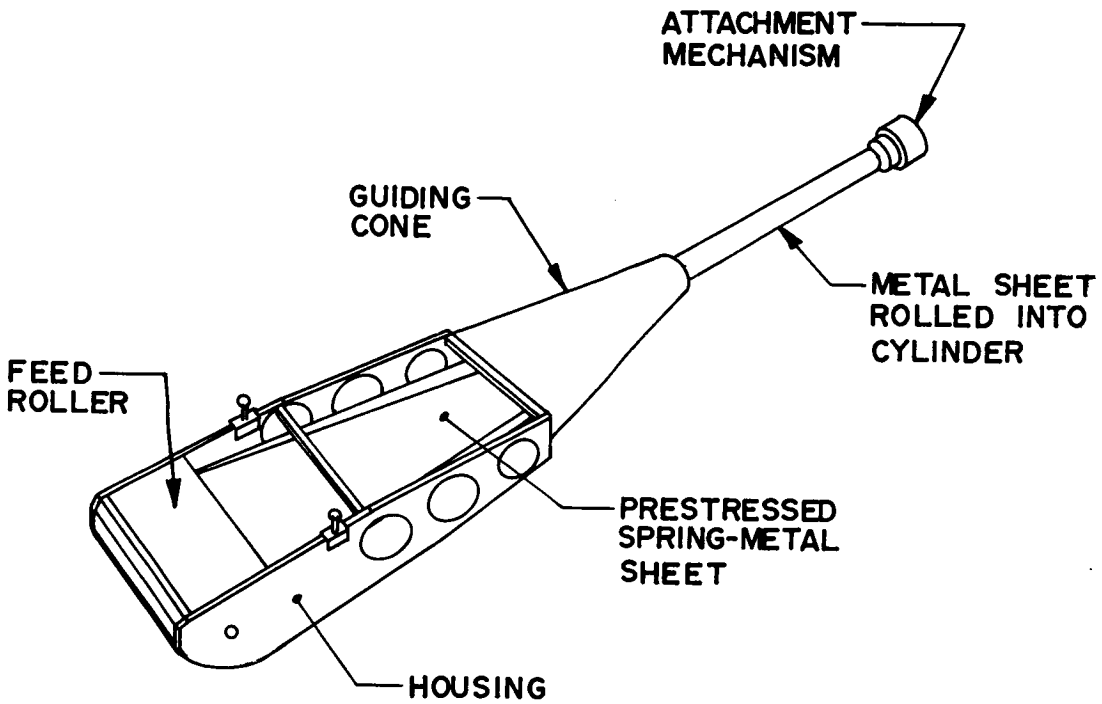

Figure 7-2. Extendable Boom. Drawing taken from Bibliography reference No. 19.

KUPU LATCH

A. PURPOSE: The KUPU latch was designed to provide a quick connect and disconnect attachment point for restraint devices and tethers or to serve as a quickly emplaced fastener for in-space assembly.

B. PREVIOUS SOLUTIONS: There have been no previous space validated systems.

C. CURRENT METHOD OF OPERATION: The latch is inserted into a hole just slightly larger than the diameter of the bolt mechanism. Once the latch has been inserted past the locking levers, the levers spring outward and prevent extraction of the latch. The finger lever nut can be rotated into position by a gloved astronaut so that the latch is secured. The latch can now serve as an attachment point for a snap ring, a tie down ring or a handhold attachment. When the latch is to be removed, the finger lever nut is loosened. When the release plunger is pressed, the locking levers retract within the bolt and the bolt can be removed from the hole. The retainer ring is permanently emplaced by the manufacturer thus preventing the nut and bolt from ever disengaging.

D. RELATED FUNCTIONAL CATEGORIES: None.

E. PERFORMANCE: Two KUPU latches of different sizes have been fabricated, the larger was able to withstand a tensile force of over 6000 lb (26 700 N).

F. ADVANTAGES AND DISADVANTAGES: The KUPU latch permits one man, space assembly and tie-down. It is designed to reduce the number of loose parts to a minimum. The nut and bolt form a single unit and are not separated in use. The usual difficulty of mating a nut and bolt assembly is eliminated and thus one-handed emplacement and removal is possible. The latch does not require the use of any hand tools but does require the presence of a pre-cut hole.

G. STATUS:

	Projected Date	Actual Date	Posted Date
Prototype Model	1968	1968	1969

Developer:
Charles C. Kubokawa
National Aeronautics and Space Administration
Ames Research Center
Moffett Field, California 94035

Sponsor:
National Aeronautics and Space Administration
Ames Research Center
Moffett Field, California 94035

H. SPECIFICATIONS: Two sizes of KUPU latch have been fabricated.

	Length	Diameter	Width	Weight
Large KUPU Latch				
KUPU Bolt	4.5 in. (11.43 cm)	0.75 in. (1.91 cm)		0.4 lb (0.182 kg)
Finger Lever & Nut	5.0 in. (12.7 cm)		1.35 in. (3.43 cm)	0.1 lb (0.045 kg)
Small KUPU Latch				
KUPU Bolt	3.0 in. (7.62 cm)	0.5 in. (1.27 cm)		0.32 lb (0.145 kg)
Finger Lever & Nut	3.5 in. (8.89 cm)		1.0 in. (2.54 cm)	0.08 lb (0.036 kg)

I. SUPPORT EQUIPMENT:

Power Source: This is a manually operated tool.

Accessories:

	Length	Diameter	Thickness	Weight	Strength
Snap Ring	2.75 in. (6.99 cm)	1.75 in. (4.45 cm)	0.85 in. (2.16 cm)	0.15 lb (0.068 kg)	300 lb (1335N)
Handhold	2.75 in. (6.99 cm)	5.5 in. (13.97 cm)	0.85 in. (2.16 cm)	0.25 lb (0.114 kg)	600 lb (2670N)
Tie Down Ring	2.75 in. (6.99 cm)	2.0 in. (5.08 cm)	1.0 in. (2.54 cm)	0.3 lb (0.136 kg)	>6000 lb (>26700N)

J. FOR MORE INFORMATION REFER TO:

Bibliography: 51

Tool Reference: None.

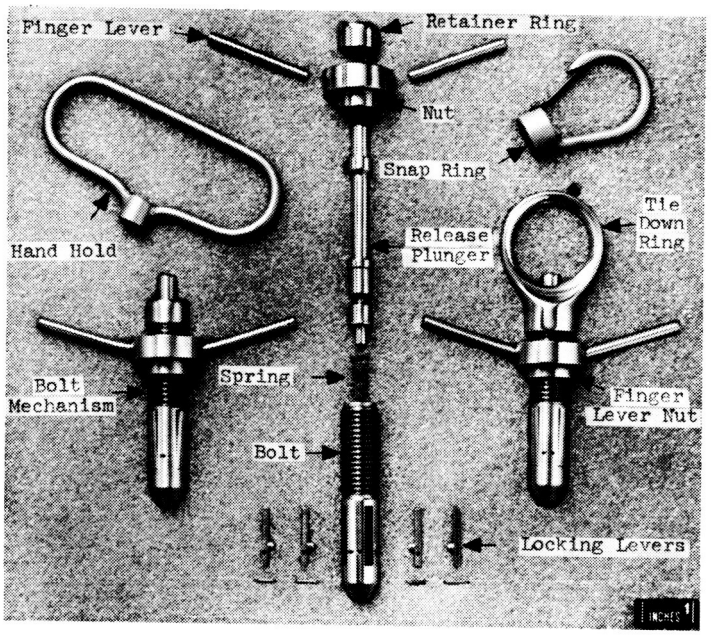

Figure 7-3a. KUPU Latch. Photograph provided by the Ames Research Center.

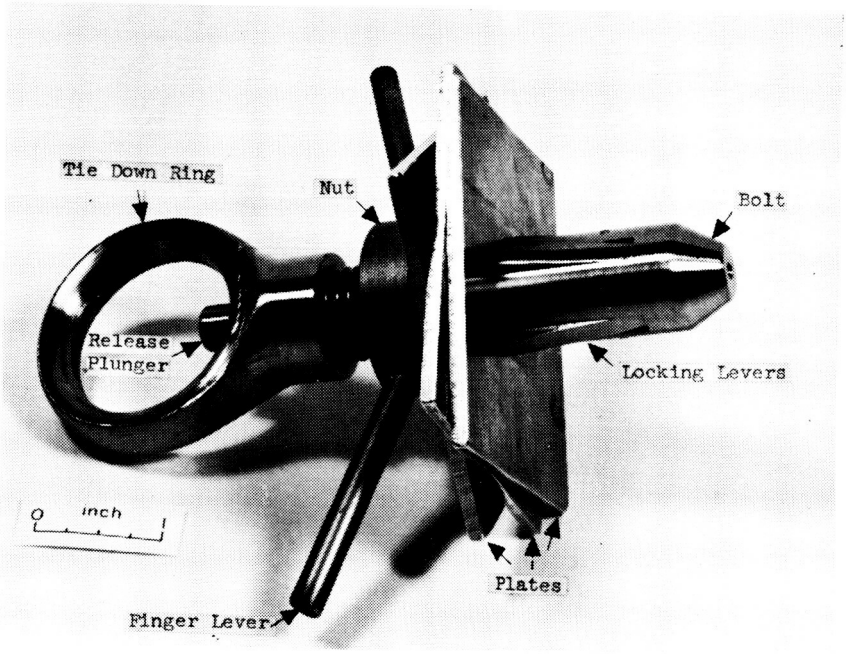

Figure 7-3b. KUPU Latch Joining Three Plates. Photograph provided by the Ames Research Center.

LANYARD SYSTEM

A. PURPOSE: The lanyard system was developed to attach hand tools and associated attachments to the astronaut in order to prevent the tools from drifting away in a zero gravity environment.

B. PREVIOUS SOLUTIONS: There have been no previous space validated systems.

C. CURRENT METHOD OF OPERATION: The lanyard system consists of a strap that fits over the astronaut's wrist, tethers that are attached to the various hand tools and tool attachments the astronaut is using, and a vest that is worn by the astronaut and has zippered and strapped pockets located on the front. When a tool or attachment is not in use it is stored in one of the vest pockets with the snap-on hook on the end of its tether attached to one of various metal rings attached to the vest. When an astronaut desires to use a tool he removes its tether hook from the vest ring and attaches it to the metal ring at the loose end of his wrist strap. The tool can then be removed from its vest pocket. If an attachment is to be used with the tool, the astronaut then removes its tether hook from its vest ring and attaches it to the tool ring that connects the tool tether to the tool. The tool attachment can then be removed from its vest pocket and attached to the tool. To replace the tool and attachment back into their pockets these steps are reversed.

D. RELATED FUNCTIONAL CATEGORIES: None.

E. PERFORMANCE: Unavailable.

F. ADVANTAGES AND DISADVANTAGES: Unavailable.

G. STATUS:

	Projected Date	Actual Date	Posted Date
Prototype Model	Unavailable	Unavailable	1969

Developer:
Herbert Swanigan
McDonnel/Douglas
Missiles and Space Division
Space Science Center
5301 Bolsa Avenue
Huntington Beach, California 92647

Sponsor:
McDonnel/Douglas
Missiles and Space Division
Space Science Center
5301 Bolsa Avenue
Huntington Beach, California 92647

H. SPECIFICATIONS: Unavailable.

I. SUPPORT EQUIPMENT:

Power Source: This is a manually operated system.

Accessories: None.

J. FOR MORE INFORMATION REFER TO:

Bibliography: Personal Communications.

Tool Reference: None.

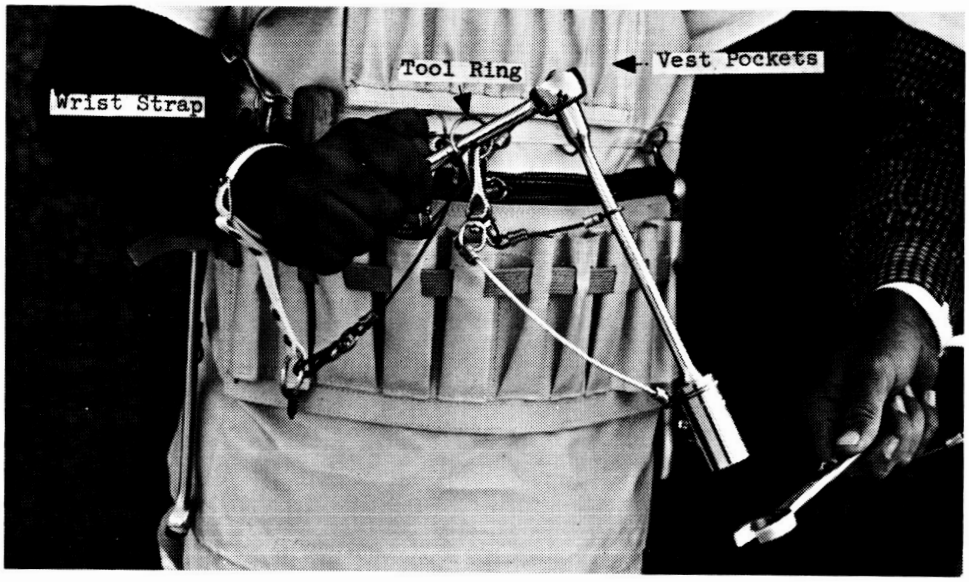

Figure 7-4a. Lanyard System. Photograph provided by the McDonnell Douglas Astronautics Company.

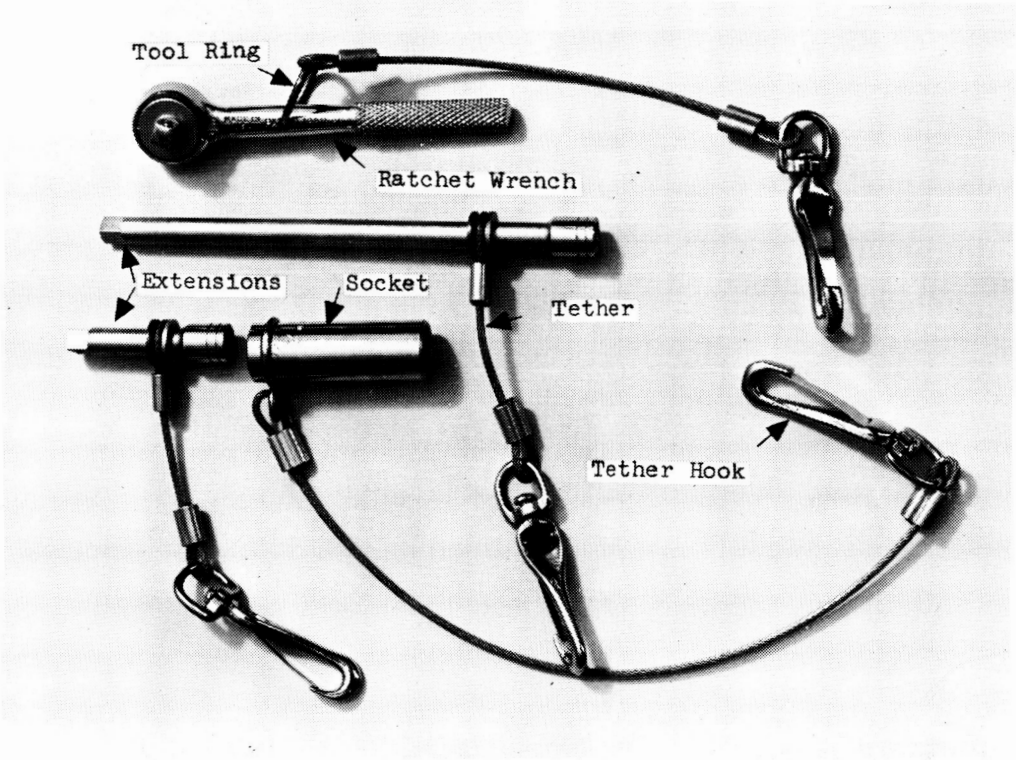

Figure 7-4b. Lanyard Tools. Photograph provided by the McDonnell Douglas Astronautics Company.

MARTIN SPACE TOOL KIT CASE

A. PURPOSE: The Martin space tool kit case was designed to hold the space tools of the Martin space tool kit.

B. PREVIOUS SOLUTIONS: There have been no previous space validated systems.

C. CURRENT METHOD OF OPERATION: The tool kit case is a triangular shaped box with a triangular lid divided into two segments. The smaller lid segment (27) (See photograph) provides separate access to the restraint buttons which are stored in a rack on the edge of the lid and their applicator (6) and also provides hand clearance for grasping the motor/handle unit handle (12). The larger lid segment (2) provides access to the rest of the tool kit. Both lids are hinged on the right side (26), allowing each lid to swing approximately 90 deg and are individually opened and closed through the use of Velcro straps (1) which serve as lid handles.

The box and the larger lid segment are filled with polyurethane (7) in which pockets have been milled out for positive retention of the various tools of the Martin space tool kit. The polyurethane is coated by a thin layer of epoxy to provide a tough, durable surface and the tools are arranged in such a manner that the items used most are closest to the preferred reach position. The small parts holder (21) is a removable unit which consists of a row of brushes used to hold hole saw blades, nuts, bolts and other small parts. A socket holder (14) provides turret storage for various sockets which are exposed by rotating the holder. The screwdriver ratchet handle (28) is held firmly in place by a clip in the smaller lid segment (27). And finally, two parallel coil springs (3) screwed into the larger lid segment (2) serve as a rack for storage of Allen wrenches, and saw blades.

The kit case is fitted with a nylon web strap (15) for the worker. Two adhesive restraint buttons, attached to spring-loaded (16) retracting cables, are mounted in the left side (20) of the case to provide attachment to the space vehicle near the work site. A 1/4-turn cam lock washer is located on the front side of the case for attaching a tether to the astronaut.

A rechargeable battery is located at the center of the case for maximum thermal insulation. Power outlets for the motor/handle unit (11) and the restraint button applicator (6) are located inside the case, the worklight outlet is externally located on the front side (13). The last outlet is used to recharge the battery. The electronics package for the restraint button applicator is also located deep in the case below the worklights pocket (10).

Photograph numbers for parts not mentioned above are: wrench extension (4), impact wrench pocket (5), screwdriver extension (23), small parts manipulator (22), screwdriver bits (18), power saw (17), dead blow hammer (24), power drill (25), impact wrench (9), and the battery access plate (19).

D. RELATED FUNCTIONAL CATEGORIES: None.

E. PERFORMANCE: Qualitative tests at the Marshall Space Flight Center have shown that the case functioned quite well. However, the components were too crowded for easy removal and replacement.

F ADVANTAGES AND DISADVANTAGES: Unavailable.

G. STATUS:

	Projected Date	Actual Date	Posted Date
Prototype Model	1965	1965	1969

Developers:
Allen E. Homes and A. L. Hamilton
Martin Company, Baltimore Division
Baltimore, Maryland 21203

Sponsor:
National Aeronautics and Space Administration
Manned Spacecraft Center
Houston, Texas 77058
Contract No. NAS 9-3161

H. SPECIFICATIONS:

Height	9.5 in. (24 cm)
Each side length	14.5 in. (36.8 cm)
Battery Voltage	12V
Battery Current	40A
Battery Capacity	163 W-hr
Recharge	50 Cycles
Total weight with tools	38 lb (17.3 kg)

I. SUPPORT EQUIPMENT:

Power Source: Eight rechargeable Yardney Silvercel Model HR-15 silver-zinc cells form the battery located in the case. See the specifications.

Accessories: A unit to recharge the battery is required.

J. FOR MORE INFORMATION REFER TO:

Bibliography: 18, 40, 41, 42, 71

Tool Reference: Martin space tool kit, small parts holder.

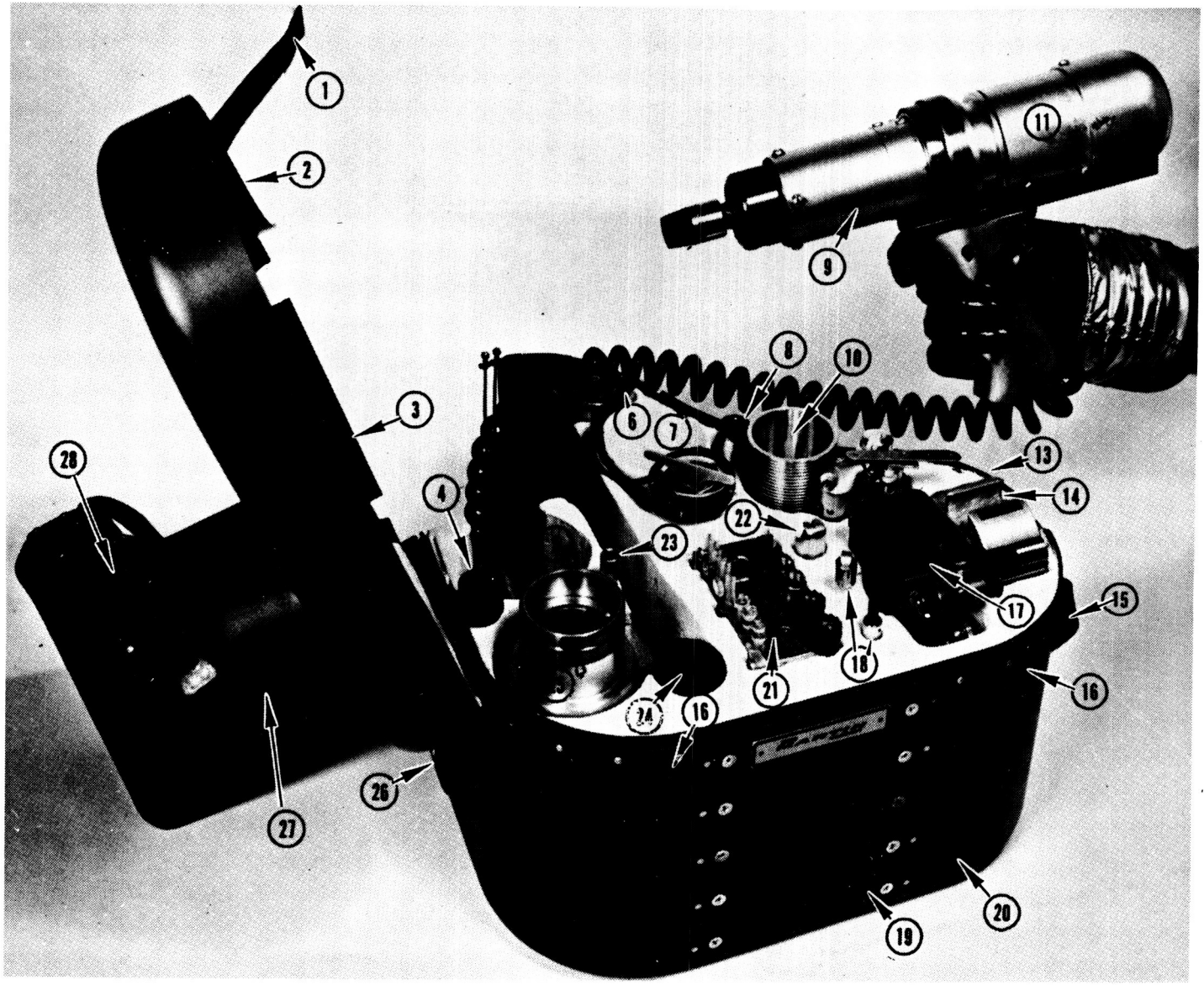

Figure 7-5. Martin Space Tool Kit Case. The lable numbers are keyed to the Current Method of Operation section entry. Photograph provided by the National Aeronautics and Space Administration.

POSITIONING TOOL (MAINTENANCE TETHER SYSTEM)

A. PURPOSE: The positioning tool was developed as a restraint system to provide positive astronaut positioning for maintenance and repair operations in space.

B. PREVIOUS SOLUTIONS: There have been no previous space validated systems.

C. CURRENT METHOD OF OPERATION: The positioning tool has five major parts: the astronaut belt, two quick release Ball-Lok Pins and two restraint assemblies. The belt is worn around the astronaut's waist. A restraint assembly is attached to each side of the belt by a quick release Ball-Lok-Pin. A quick disconnect coupling on the outer end of the telescoping tubes of each restraint assembly holds an attaching device which is used to anchor the positioning tool and thus the astronaut to a space vehicle structure. A number of attaching devices have been developed for various shaped structures.

Several adjustment features allow the astronaut to adjust and maintain his position with respect to the structure attachment points. The telescoping tubes of each of the restraint assemblies may be locked at any position between its collapsed and extended positions by simply rotating each of the extended sections a slight amount, thus activating an internal locking mechanism. Thus the astronaut is given a wide adjustment in his distance from the structure. The telescoping tubes may also be rotated through 360° (6.28 rad) about the longitudinal axis of the belt and restraint attachment fittings and locked in any position with the rotation of the vertical motion lock on the same axis. In addition, the telescoping tubes may also be pivoted in any direction or in circular motion about the center of the spherical ball bearing of the swivel. The amount of motion in any direction is limited by the design of the swivel, the stabilizer and the vertical motion stop aft of the swivel. The spring-loaded stabilizer presses firmly against the bearing housing and resists displacement of the tubes from the center position. Thus the astronaut must apply a small force in the direction of the desired motion in order to cause the tubes to pivot about the ball bearing. Finally, the quick disconnect coupling which holds the structure attaching device may be freely rotated through 360° (6.28 rad) about the longitudinal axis of the tubes.

In an emergency, the astronaut can disconnect himself from the vehicle structure in several ways. He can quickly unbuckle his belt which uses the ends of an automobile safety belt for buckling. He can activate the button release handles on the quick release Ball-Lok-Pins which would uncouple the restraint assembly from the belt. Or finally, he can disconnect the attaching devices from the quick disconnect couplings.

D. RELATED FUNCTIONAL CATEGORIES: None.

E. PERFORMANCE: A fully extended tube assembly will not fail as a column under a compressive force of 200 lb (890 N).

F. ADVANTAGES AND DISADVANTAGES: Unavailable.

G. STATUS:

	Projected Date	Actual Date	Posted Date
Prototype Model	1969	1969	1969

Developers:
E. R. Coleman and E. L. Brown
National Aeronautics and Space Administration
Marshall Space Flight Center
Huntsville, Alabama 35812

Sponsor:
National Aeronautics and Space Administration
Marshall Space Flight Center
Huntsville, Alabama 35812

H. SPECIFICATIONS: When the telescoping tube assembly is fully extended, there are 32 in. (81.3 cm) between the center of the tubular attachment device and the belt attachment assembly.

I. SUPPORT EQUIPMENT:

Power Source: This is a manually operated tool.

Accessories: Various attachment devices may be used with this tool.

J. FOR MORE INFORMATION REFER TO:

Bibliography: 14

Tool Reference: Astronaut boom attachment system.

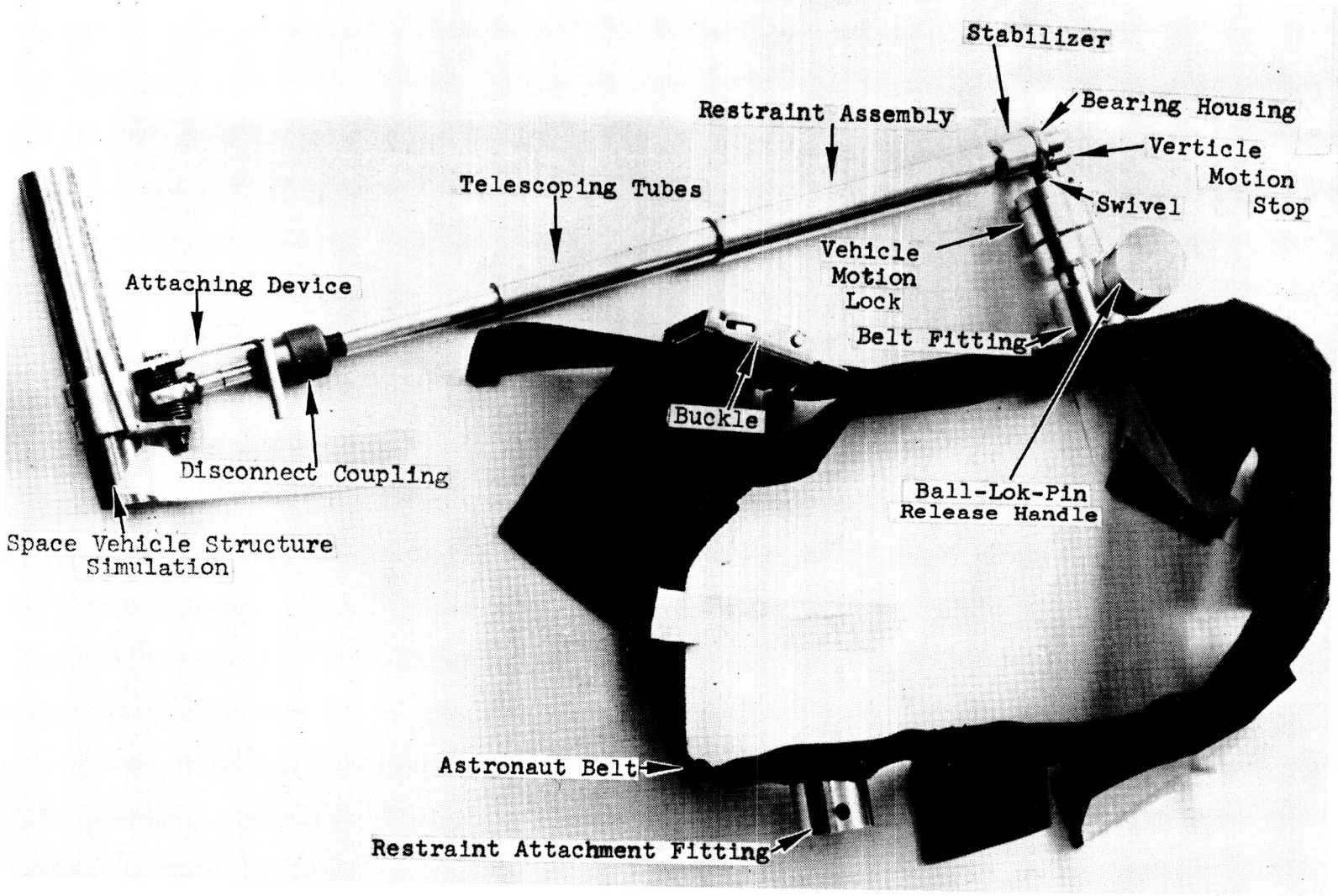

Figure 7-6. Positioning Tool. Photograph provided by the Marshall Space Flight Center.

REVERSIBLE GEOLOGICAL TOOL CONTAINER

A. PURPOSE: The reversible geological tool container was developed to restrain the tools of the prototype lunar geological tool kit both during transit in the LEM from earth to the lunar surface and during astronaut exploratory traverses and to provide temporary storage of lunar rock specimens.

B. PREVIOUS SOLUTIONS: There have been no previous space validated systems.

C. CURRENT METHOD OF OPERATION: The reversible geological tool container is part of the prototype lunar geological tool kit. It is essentially an aluminum box with the geological tools bracket mounted to the inner walls during transit to the moon. The wall panels of the box are fastened together by hinges, so that it can be "refolded" by the astronaut on the lunar surface in such a manner that the inner walls and the bracket mounted tools are "reversed" to the outside position. The sample stowage bag can be snap-fastened to the inner walls of the box in this lunar surface configuration for temporary storage of lunar rock specimens. The box can be carried with one hand from place to place on the lunar surface.

To refold the box from the stowage to the lunar surface configuration, the astronaut must unlock the top and bottom panels, pull one of the longitudinal hinge pins, refold the box, replace the hinge pin, and relock the top and bottom panels. It was intended that this operation would have been performed on top of the scientific equipment box, which would provide a convenient "work table" for the astronaut.

In the lunar surface configuration, the box can be used to provide a firm foundation to support the orthogonal clinometer and sun gnomon assembly during surveying operations. The box has three legs on the bottom panel which are designed to be pushed into the anticipated lunar surface dust layer until the bottom panel "bottoms-out" against the surface so that the box is held firmly in place. The Jacob Staff is then attached to brackets on the side of the box so that it is held up vertically and the survey instrument is attached to the top of the Jacob Staff where it can be easily used by the spacesuited astronaut.

D. RELATED FUNCTIONAL CATEGORIES: 6

E. PERFORMANCE: A brief "walk-through test" was conducted with a spacesuited subject for the purpose of identifying interface problems. The only assembly task which was impossible to perform was the attachment of the surveying instrument to the Jacob Staff. Some minor improvements were decided upon but the basic box concept was found to be sound.

F. ADVANTAGES AND DISADVANTAGES: Unavailable.

G. STATUS:

	Projected Date	Actual Date	Posted Date
Prototype Model	1965	1965	1969

Developer:
D. S. Crouch (Program Technical Director)
Martin Marietta Corporation, Denver Division
Denver, Colorado 80201

Sponsor:
National Aeronautics and Space Administration
Manned Spacecraft Center
Houston, Texas 77058
Contract No. NAS 9-3647

H. SPECIFICATIONS:

Length	2 ft (61 cm)
Width	1 ft (30.5 cm)
Thickness	1 ft (30.5 cm)
Weight	12.9 lb (5.86 kg)

I. SUPPORT EQUIPMENT:

Power Source: This is a manually operated tool.

Accessories: This tool is designed to be stored in the LEM scientific equipment box.

J. FOR MORE INFORMATION REFER TO:

Bibliography: 26, 29, 47

Tool Reference: Prototype lunar geological tool kit, Jacob Staff, orthogonal clinometer and sun gnomon assembly.

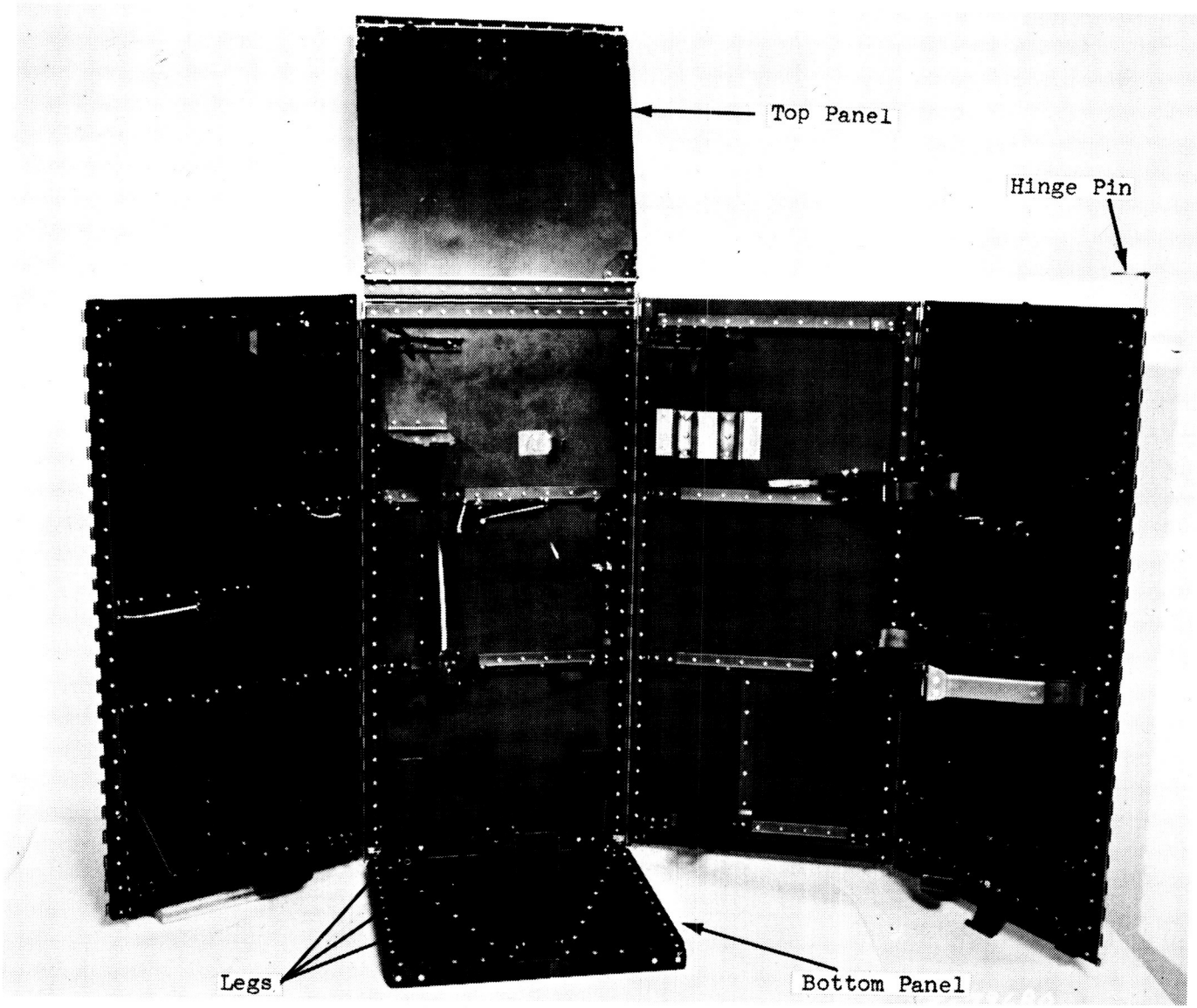

Figure 7-7a. Reversible Geological Tool Container.
Photograph provided by Martin Marietta Corporation.



Figure 7-7b. Reversible Geological Tool Container in the Lunar Surface Configuration. Photograph provided by Martin Marietta Corporation.

RIGID ROPE

A. PURPOSE: The rigid rope was designed to provide positive astronaut positioning for maintenance and repair operations in space.

B. PREVIOUS SOLUTIONS: There have been no previous space validated systems.

C. CURRENT METHOD OF OPERATION: The rigid rope is essentially a tether with a controllable rigidity feature. In operation, one end would be attached to the spacecraft and the other end with a lever would be attached to the spacesuit of the astronaut. Actuation of the lever in one direction causes the rigid rope to become very flexible, allowing the relative position of the astronaut and the work site to be changed with little effort. When the new position is obtained, actuation of the lever in the opposite direction causes the rigid rope to become very rigid and the astronaut is held firmly in place.

Along the length of the rigid rope there is a series of swivel joints, each having its plane of rotation located at right angles to those of the preceding and succeding joints. Each joint mechanism is a set of ring gears attached to each side of the joint structure with a spur gear of the same pitch diameter mating with both. With the activation of the astronaut's control lever, the spur gear is moved in and out of mesh with both ring gears. When it is meshed with both ring gears, it acts as a fine-toothed spline and locks the joint; and when it is not, the joint rotates freely. Activation of the level controls all the joints simultaneously. When the joints are locked, the rigid rope is rigid; and when they are unlocked, it is flexible.

D. RELATED FUNCTIONAL CATEGORIES: None.

E. PERFORMANCE: A breadboard model was able to withstand 100 ft-lb (135.6 m-N) torques.

F. ADVANTAGES AND DISADVANTAGES: Unavailable.

G. STATUS:

	Projected Date	Actual Date	Posted Date
Breadboard Model	1966	1966	1969

Developers:
Allen E. Holmes and A. L. Hamilton
Martin Company, Baltimore Division
Baltimore, Maryland 21203

Sponsor:
National Aeronautics and Space Administration
Manned Spacecraft Center
Houston, Texas 77058
Contract No. NAS 9-3161

H. SPECIFICATIONS: Unavailable.

I. SUPPORT EQUIPMENT:

Power Source: This is a manually operated tool.

Accessories: None.

J. FOR MORE INFORMATION REFER TO:

Bibliography: 17, 41

Tool Reference: None.

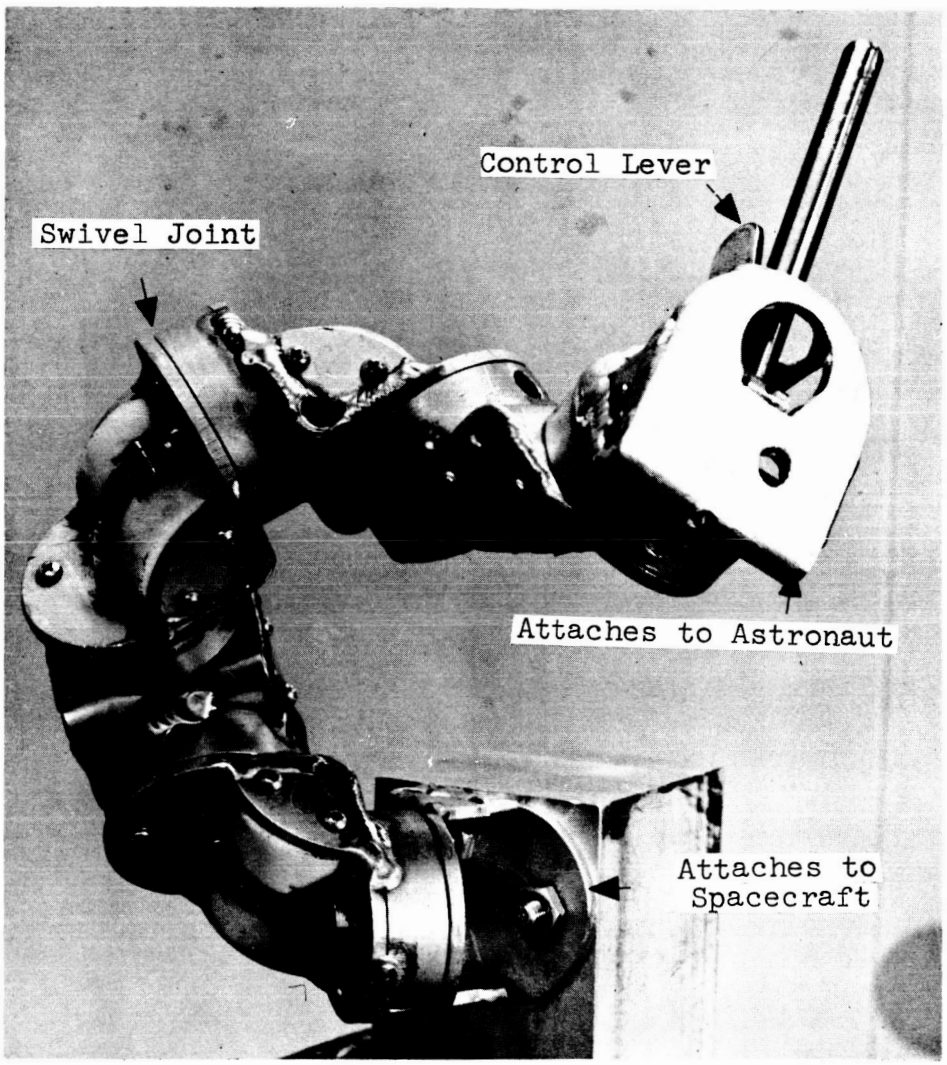

Figure 7-8. Rigid Rope. Photograph provided by the Marshall Space Flight Center.

SERPENTUATOR (SERPENTINE ACTUATOR)

A. PURPOSE: The serpentuator was developed to transport astronauts, tools and equipment within an orbiting workshop or between space vehicles (a serpentuator inside a space vehicle is called an inserp; outside, exserp) and to provide positive astronaut positioning for maintenance and repair operations.

B. PREVIOUS SOLUTIONS: There have been no previous space validated systems.

C. CURRENT METHOD OF OPERATION: The serpentuator consists of a series of cylindrical links separated by joints driven by electric motors so that they may bend as much as 45° (0.785 rad) in one direction. All these joints bend in the same direction in the plane. The base end of the serpentuator is attached firmly to the ship through a series of motorized joints that allow the serpentuator to roll as much as +200° (3.49 rad) and yaw as much as +120° (209 rad). Attachments can be placed at the tip end to support an astronaut and/or cargo. Three motorized joints separate the last link and the tip attachment, and give the attachment yaw, pitch and roll capabilities. The serpentuator has quick disconnect capabilities at both the base and tip ends, and it can be operated by controls at either end. When not in use the serpentuator can be coiled about a coil rack.

D. RELATED FUNCTIONAL CATEGORIES: None.

E. PERFORMANCE: It is projected that the serpentuator should be able to withstand a free end force of 6 lb (26.7 N) with a mechanical design safety factor of 1.5 and an impact load factor of 3.

F. ADVANTAGES AND DISADVANTAGES: Unavailable.

G. STATUS:

	Projected Date	Actual Date	Posted Date
Prototype Model	1969	1969	1969

Developer:
Herman Blaise
National Aeronautics and Space Administration
Marshall Space Flight Center
Huntsville, Alabama 35812

Sponsor:
National Aeronautics and Space Administration
Marshall Space Flight Center
Huntsville, Alabama 35812

H. SPECIFICATIONS:

Number of links	8	
Link length	60.5 in.	(154. cm)
Link diameter	4.5 in.	(11.4 cm)

I. SUPPORT EQUIPMENT:

Power Source: All electric power is provided by external sources in the space vehicle.

Accessories: Attachments can be placed at the tip to support an astronaut and/or cargo.

J. FOR MORE INFORMATION REFER TO:

Bibliography: 63, 70

Tool Reference: None.

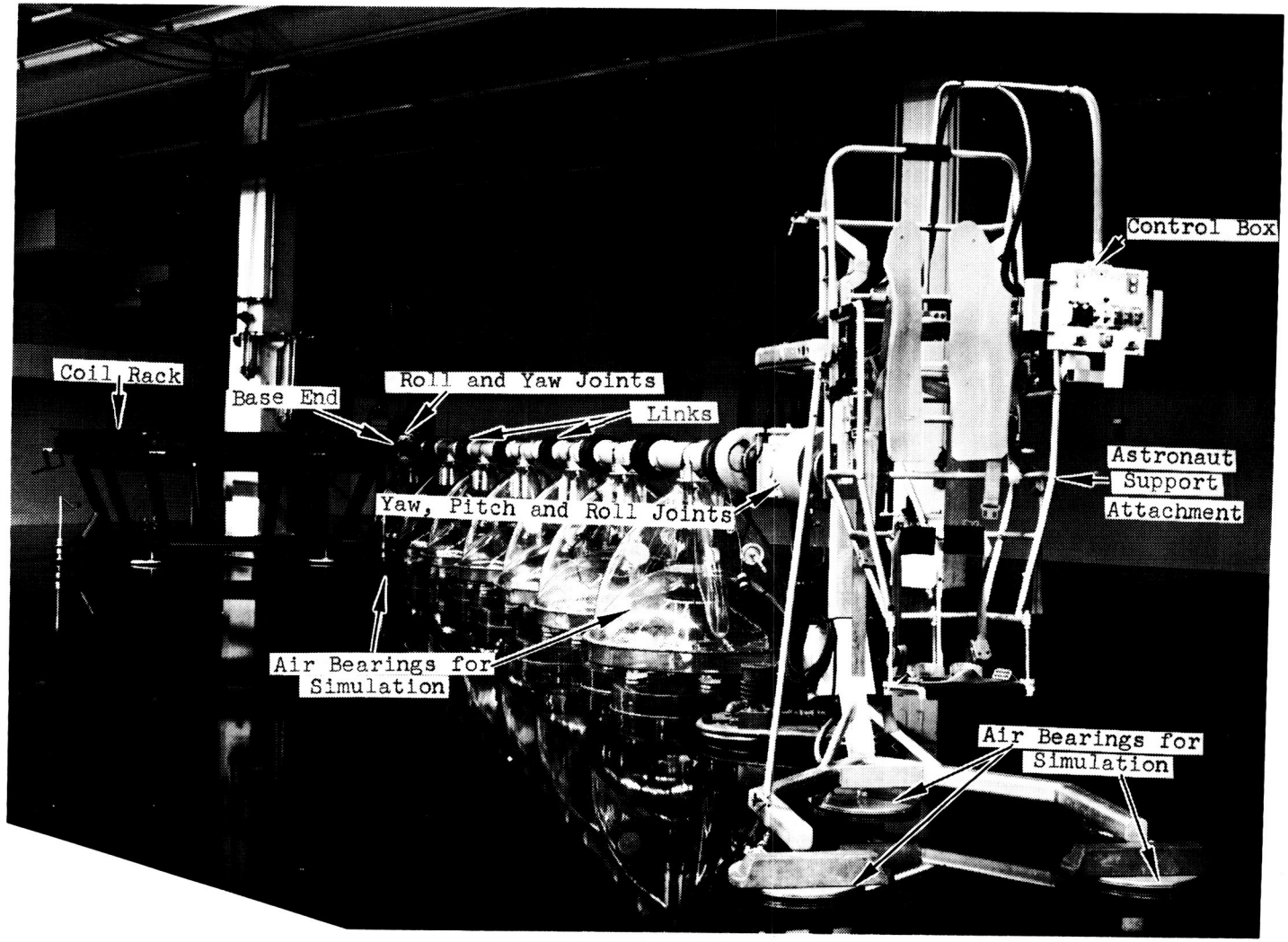

Figure 7-9. Serpentuator. Photograph provided by the Marshall Space Flight Center.

SMALL PARTS HOLDER

A. PURPOSE: The small parts holder was designed to retain small tools and parts when not in use to prevent them from drifting away in a zero gravity environment.

B. PREVIOUS SOLUTIONS: There have been no previous space validated systems.

C. CURRENT METHOD OF OPERATION: The small parts holder is part of the Martin space tool kit and has its own pocket in the tool kit case. The device consists of a set of small diameter brushes set vertically in a holder so that parts such as nuts and washers with holes can be inserted over a single brush while parts such as screws that are solid can be inserted between adjacent brushes. The stiffness of the short bristle brush is more than adequate to hold light weight parts, yet insertion and removal forces are reasonably low.

D. RELATED FUNCTIONAL CATEGORIES: None.

E. PERFORMANCE: The small parts holder was evaluated by NASA and judged a sound concept.

F. ADVANTAGES AND DISADVANTAGES: The brushes bend occasionally but this is considered only a minor problem.

G. STATUS:

	Projected Date	Actual Date	Posted Date
Prototype Model	1965	1965	1969

Developers:
Allen E. Holmes and A. L. Hamilton
Martin Company, Baltimore Division
Baltimore, Maryland 21203

Sponsor:
National Aeronautics and Space Administration
Manned Spacecraft Center
Houston, Texas 77058
Contract No. NAS 9-3161

H. SPECIFICATIONS: Unavailable.

I. SUPPORT EQUIPMENT:

Power Source: This is a manually operated tool.

Accessories: This tool is stored in the Martin space tool kit case.

J. FOR MORE INFORMATION REFER TO:

Bibliography: 17, 40, 41, 42, 71

Tool Reference: Martin space tool kit, Martin space tool kit case.

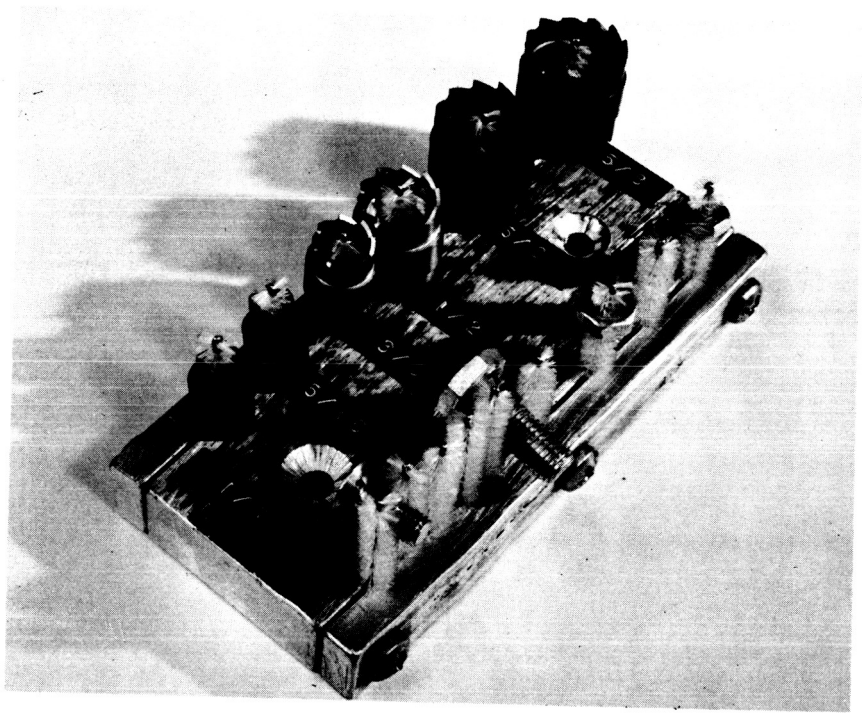

Figure 7-10. Small Parts Holder. Photograph provided by the Marshall Space Flight Center.

SMALL PARTS MANIPULATOR (FINGERNAIL)

A. PURPOSE: The small parts manipulator, also called the fingernail, was designed to aid the suited astronaut in the manipulation of small parts.

B. PREVIOUS SOLUTIONS: There have been no previous space validated systems.

C. CURRENT METHOD OF OPERATION: The small parts manipulator is part of the Martin space tool kit and is located in a pocket in the tool kit case. It is a formed metal device designed to fit over the last segment of the index finger of a pressurized space glove and to serve as an artificial fingernail to aid the astronaut in the manipulation of small parts. The cylindrical section fits over the finger so that the artificial fingernail comes down over the end of the finger. The notch aids in the handling of screws and a blade can be placed through the hole in a small nut.

D. RELATED FUNCTIONAL CATEGORIES: None.

E. PERFORMANCE: The small parts holder (fingernail) was evaluated by NASA and was found to be a very practical concept.

F. ADVANTAGES AND DISADVANTAGES: Small parts manipulation is accomplished much more easily with this tool on the glove than without it.

G. STATUS:

	Projected Date	Actual Date	Posted Date
Prototype Model	1965	1965	1969

Developers:
Allen E. Holmes and A. L. Hamilton
Martin Company, Baltimore Division
Baltimore, Maryland 21203

Sponsor:
National Aeronautics and Space Administration
Manned Spacecraft Center
Houston, Texas 77058
Contract No. 9-3161

H. SPECIFICATIONS: Unavailable.

I. SUPPORT EQUIPMENT:

Power Source: This is a manually operated tool.

Accessories: This tool is stored in the Martin space tool kit case.

J. FOR MORE INFORMATION REFER TO:

Bibliography: 17, 40, 41, 42, 71

Tool Reference: Martin space tool kit, Martin space tool kit case.

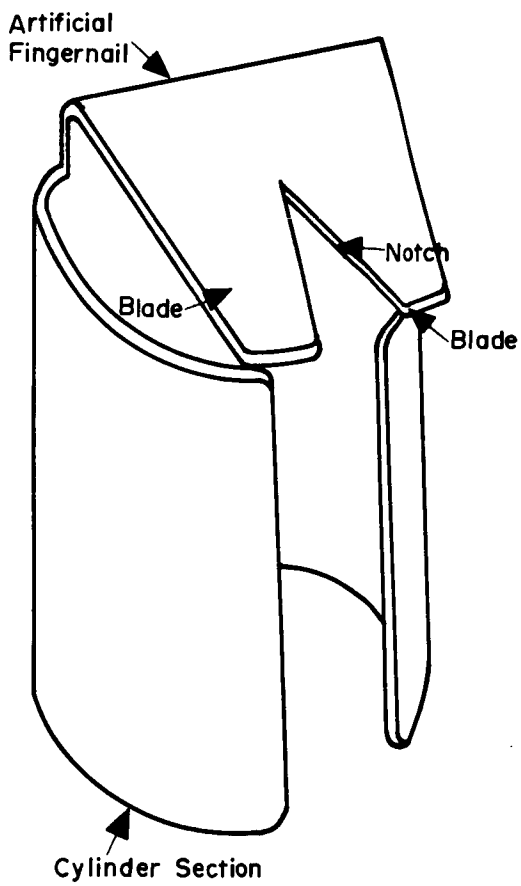

Figure 7-11. Small Parts Manipulator. Drawing taken from Bibliography reference No. 41.

TOOL BOX

A. PURPOSE: The tool box was designed to secure stored tools in a zero gravity environment.

B. PREVIOUS SOLUTIONS: There have been no previous space validated systems.

C. CURRENT METHOD OF OPERATION: Tools and parts are held in place in the tool box with velcro, which is bonded onto the tool box and tools. The box is positioned on the front of the user using a system of spring coils and hooks.

D. RELATED FUNCTIONAL CATEGORIES: None.

E. PERFORMANCE: A spacesuited worker used this tool box in an aircraft flying Keplerian trajectories. The tool box served effectively as a portable tool storage device as the operator performed a simulated maintenance task. On occasion, however, it slipped out of its correct position thereby preventing the subject, under pressurized conditions, from seeing that portion of the box closest to his body.

F. ADVANTAGES AND DISADVANTAGES: The velcro material in the tool box and on the tools required deliberate acts for removing and replacing tools.

G. STATUS:

	Projected Date	Actual Date	Posted Date
Prototype Model	1966	1966	1969

Developer:
Captain Donald D. Mueller
United States Air Force
Aerospace Medical Research Laboratories
Aerospace Medical Division
Air Force Systems Command
Wright-Patterson Air Force Base, Ohio 45433

Sponsor:
United States Air Force
Aerospace Medical Research Laboratories
Aerospace Medical Division
Air Force Systems Command
Wright-Patterson Air Force Base, Ohio 45433

H. SPECIFICATIONS:

Length	15 in. (38.1 cm)
Width	10 in. (25.4 cm)
Thickness	4 in. (10.2 cm)
Material	Fiberglass

I. SUPPORT EQUIPMENT:

Power Source: This is a manually operated tool.

Accessories: None.

J. FOR MORE INFORMATION REFER TO:

Bibliography: 64, 65, 66

Tool Reference: None.

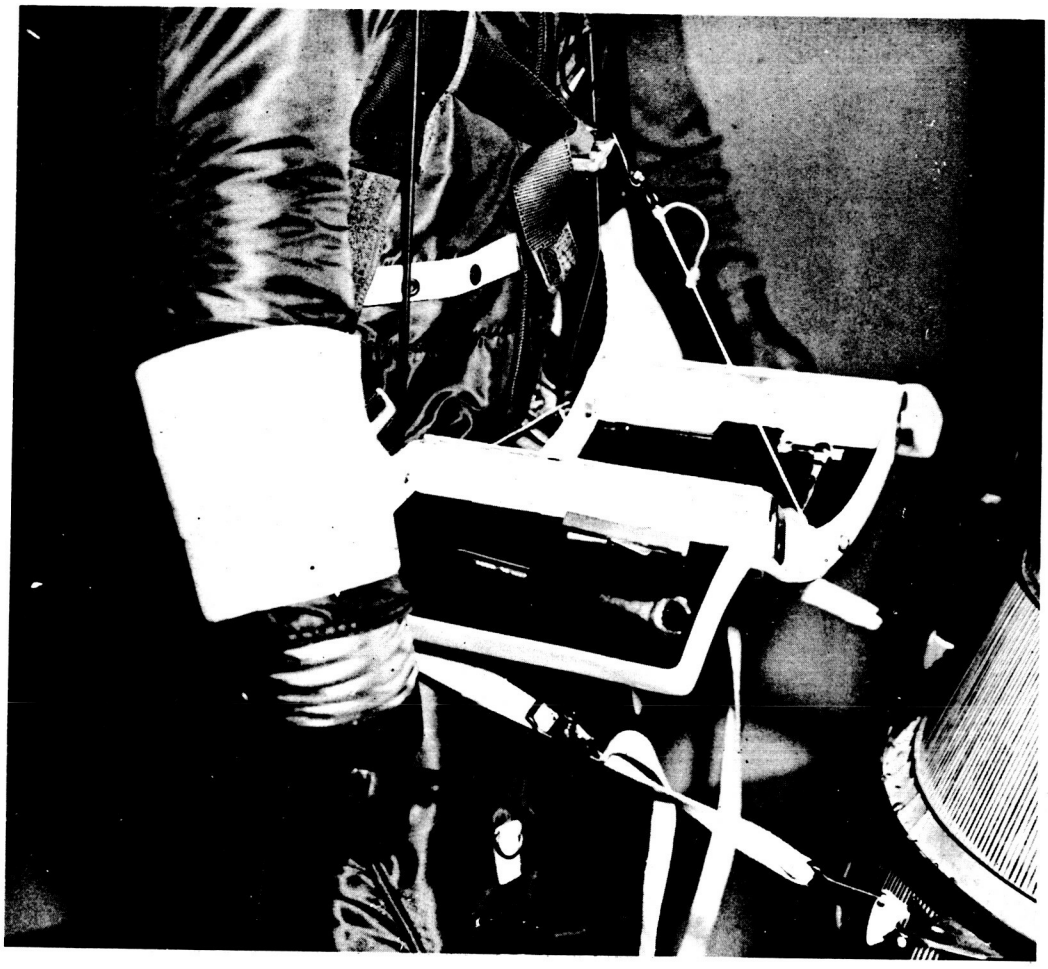

Figure 7-12a. Tool Box Worn by Astronaut. Photograph reproduced from one in Bibliographic reference No. 63.

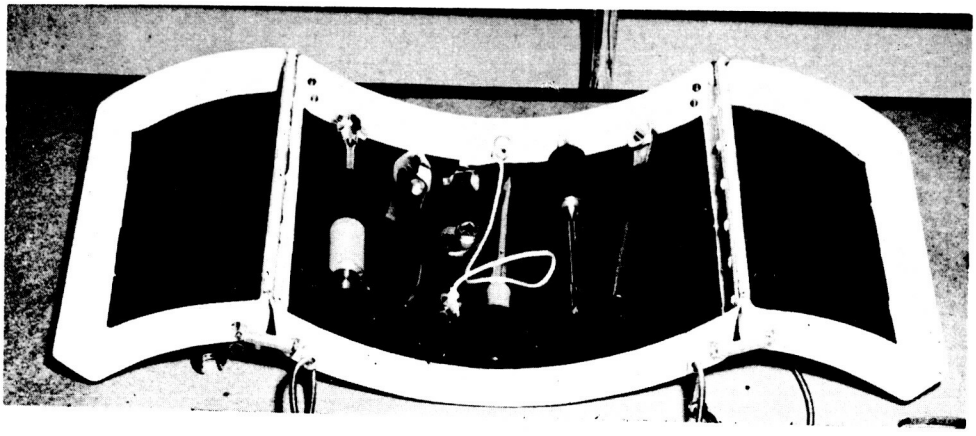

Figure 7-12b. Internal View of Tool Box. Photograph reproduced from one in Bibliographic reference No. 63.

TOOL CUFF SYSTEM

A. PURPOSE: The tool cuff system was designed to provide a device that can be attached to the astronaut's leg, **waist or to a** structure near a worksite for convenient storage of tool attachments used with the space tool mitten.

B. PREVIOUS SOLUTIONS: There have been no previous space validated systems.

C. CURRENT METHOD OF OPERATION: The tool cuff system consists of the tool cuff proper, a leg mount and a waist mount. The tool cuff proper is basically an aluminum block with nine cylindrical chambers milled out of it. Each chamber serves as a receptacle for one of the six different size hex sockets ranging from 1/4 to 5/8 in. (0.64 to 1.59 cm), a flat blade driver, a Phillips driver and a 3/16 in. (0.48 cm) male hex driver. Each chamber contains a collet mechanism used to retain the tool attachment. When a tool attachment on the space tool mitten is to be returned to the tool cuff, the tool attachment, while still attached to the space tool mitten, is inserted into the appropriate chamber. It will engage at the bottom of the chamber an appropriate sized bolt head, screw head or Allen wrench receptacle which will operate the collet mechanism chamber. When the space tool mitten is run forward, the four sections of the collet mechanism walls of the chamber will move inward until they grip the tool attachment. The space tool mitten is then pulled back out of the chamber to disconnect it from the attachment. To attach a tool attachment, the above steps are reversed. The collet mechanisms and the attachments are color coded in order to aid the astronaut in matching the attachments with the right chamber.

The tool cuff can be used in three basic modes. In the first mode, use is made of the metal plate at the bottom of the tool cuff. This plate has two holes into which KUPU latches can be inserted to attach the tool cuff to a structure near the worksite. In the second mode, the tool cuff can be mounted on a leg mount attached to the astronaut's right leg just below the knee. In this mode, the space tool mitten has easy access to the tool cuff. In the final mode, the tool cuff can be mounted on a waist mount attached to the astronaut's left side. The tool cuff is placed face first into the mount and the connect button is pressed. An internal hook mechanism then holds the cuff in place. To remove the tool cuff, the disconnect button is pressed and the cuff can slide out of the mount. The tool cuff must be removed from the mount and held in the left hand to gain access to the tool attachments.

D. RELATED FUNCTIONAL CATEGORIES: None.

E. PERFORMANCE: No record of performance.

F. ADVANTAGES AND DISADVANTAGES: Unavailable.

G. STATUS:

	Projected Date	Actual Date	Posted Date
Prototype B	1969	1969	1969
Prototype A	1968	1968	1969
Breadboard	1967	1967	1969

Developers:
Samuel J. Raff, Lawrence B. Johnson,
Barry R. Korb and Robert P. Burruss
Raff Associates, Inc.
912 Thayer Avenue
Silver Spring, Maryland 20910

Manufacturer:
Hanover Industrial Machine Co.
1650 Broadway
Hanover, Pennsylvania 17331

Sponsor:
National Aeronautics and Space Administration
Ames Research Center
Moffett Field, California 94035
Contract No. NAS 2-5282

H. SPECIFICATIONS:

Tool Cuff Proper	
Length	6-3/8 in. (16.2 cm)
Width	2-5/8 in. (6.7 cm)
Depth	1-3/4 in. (4.4 cm)
Leg Mount	
Height	4 in. (10.2 cm)
Width	3 in. (7.6 cm)
Protrusion	4 in. (10.2 cm)
Waist Mount	
Length	6-3/8 in. (16.2 cm)
Width	2-5/8 in. (6.7 cm)
Depth	7/8 in. (2.2 cm)

I. SUPPORT EQUIPMENT:

Power Source: This is a manually operated tool.

Accessories: None.

J. FOR MORE INFORMATION REFER TO:

Bibliography: 13, 43, 44, 45, 46

Tool Reference: Space tool mitten.

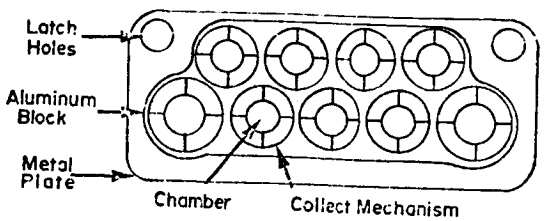

Tool Cuff (Top View)

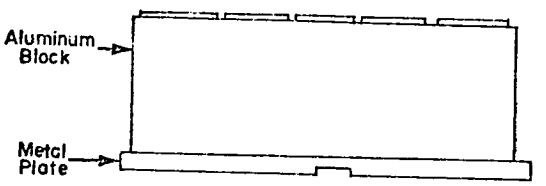

Tool Cuff (Side View)

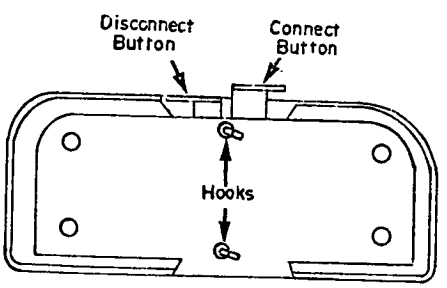

Waist Mount (Side View)

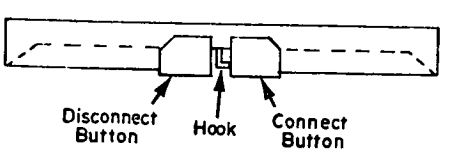

Waist Mount (Top View)

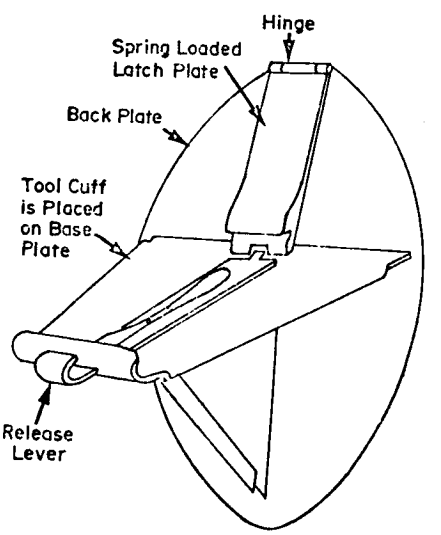

Leg Mount (Shown Without Legging Used to Attach to Leg)

Figure 7-13a. Tool Cuff System (Prototype B). Drawings provided by Raff Associates, Incorporated.

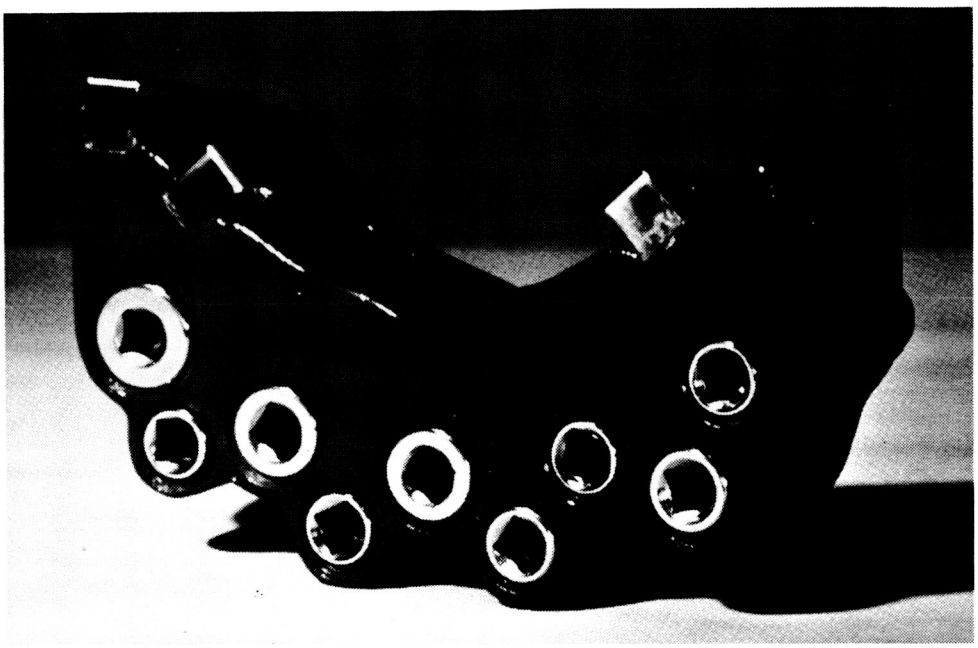

Figure 7-13b. Tool Cuff (Prototype A).
Photograph provided by Raff Associates, Incorporated.

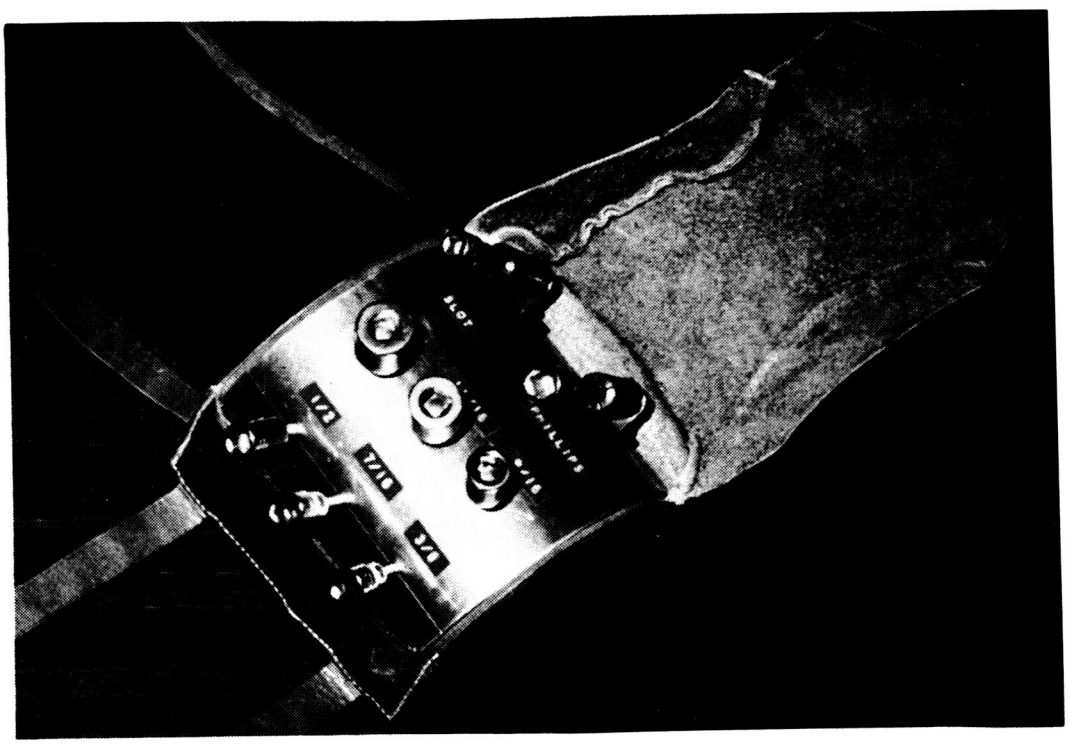

Figure 7-13c. Tool Cuff (Breadboard).
Photograph provided by Raff Associates, Incorporated.

VARIABLE FLEXIBILITY TETHER SYSTEM

A. PURPOSE: The variable flexibility tether system was designed to provide positive astronaut positioning for maintenance and repair operations in space.

B. PREVIOUS SOLUTIONS: There have been no previous space validated systems.

C. CURRENT METHOD OF OPERATION: The variable flexibility tether system consists of three major components: (1) the proximal controller, (2) the tether section, and (3) the distal end attachment. The tether system, when in use, is connected to a modified parachute harness containing the mate for the proximal disconnect on the controller case. When the harness is donned, the proximal controller is positioned on the left hip of the operator and the distal end attachment is anchored to some structure on a space vehicle.

The tether section consists of integral ball-socket links strung over a central tensioning cable such that the ball of one link rests in the socket of the next link. When tension is applied to the cable by cranking the one-way ratcheting handle assembly, a compressive load is transmitted to the ball-socket links and relative motion between the links is impeded by intra-link frictional contact forces. When the tension release button is depressed and the handle assembly is pulled in a direction opposite to the cranking direction, the tension is immediately released and the tether becomes flexible. In addition to the central tensioning cable, an electrical conductor which provides the astronaut with electric power from the space vehicle and a manipulator/distal disconnect actuation cable which controls the distal end attachment traverse the tether section. The tether section is externally jacketed with a nylon-banlon knitted fabric which provides a continuous external surface to minimize snagging problems. Also along with the additional cables it prevents uncontrolled rotation between the links when the tether is limp and separation of the tether in the event the central cable breaks.

The distal end of the tether section accepts either a manipulator or a disconnect device as a distal end attachment. The manipulator has two fingers which can be opened by tension in the actuation cable when the manipulator actuation handle is pushed forward and closed by a spring return force. A spring loaded locking pin which can be actuated locally or remotely gives the manipulator a disconnect ability. The distal disconnect device is a modified fluid quick disconnect that can be connected locally and can be released locally and remotely.

D. RELATED FUNCTIONAL CATEGORIES: None.

E. PERFORMANCE: Laboratory tests demonstrated that the tether system can support weights up to 21 lb (9.55 kg) on the proximal end and will withstand a torque as great as 61 ft-lb (83 m-N) about the longitudinal axis of the proximal disconnect.

F. ADVANTAGES AND DISADVANTAGES: When activated, the system holds the astronaut rigidly in place and frees both hands from restraint tasks to perform work.

G. STATUS:

	Projected Date	Actual Date	Posted Date
Prototype Model	1968	1968	1969

Developer:
P. J. Radar
Missile and Space Division
General Electric Company
Philadelphia, Pennsylvania 19101

Sponsor:
United States Air Force
Air Force Aero Propulsion Laboratory
Support Technology Division
Air Force Systems Command
Wright-Patterson Air Force Base, Ohio 45433
Contract No. F 33615-67-C-1725

H. SPECIFICATIONS:

Tether section length	8 ft (2.4 m)
Tether section diameter	2 in. (5.1 cm)
Total system volume	1 ft^3 (0.028 m^3)
Total system weight	22 lb (10 kg)

I. SUPPORT EQUIPMENT:

Power Source: This is a manually operated tool.

Accessories: None.

J. FOR MORE INFORMATION REFER TO:

Bibliography: 60

Tool Reference: None.

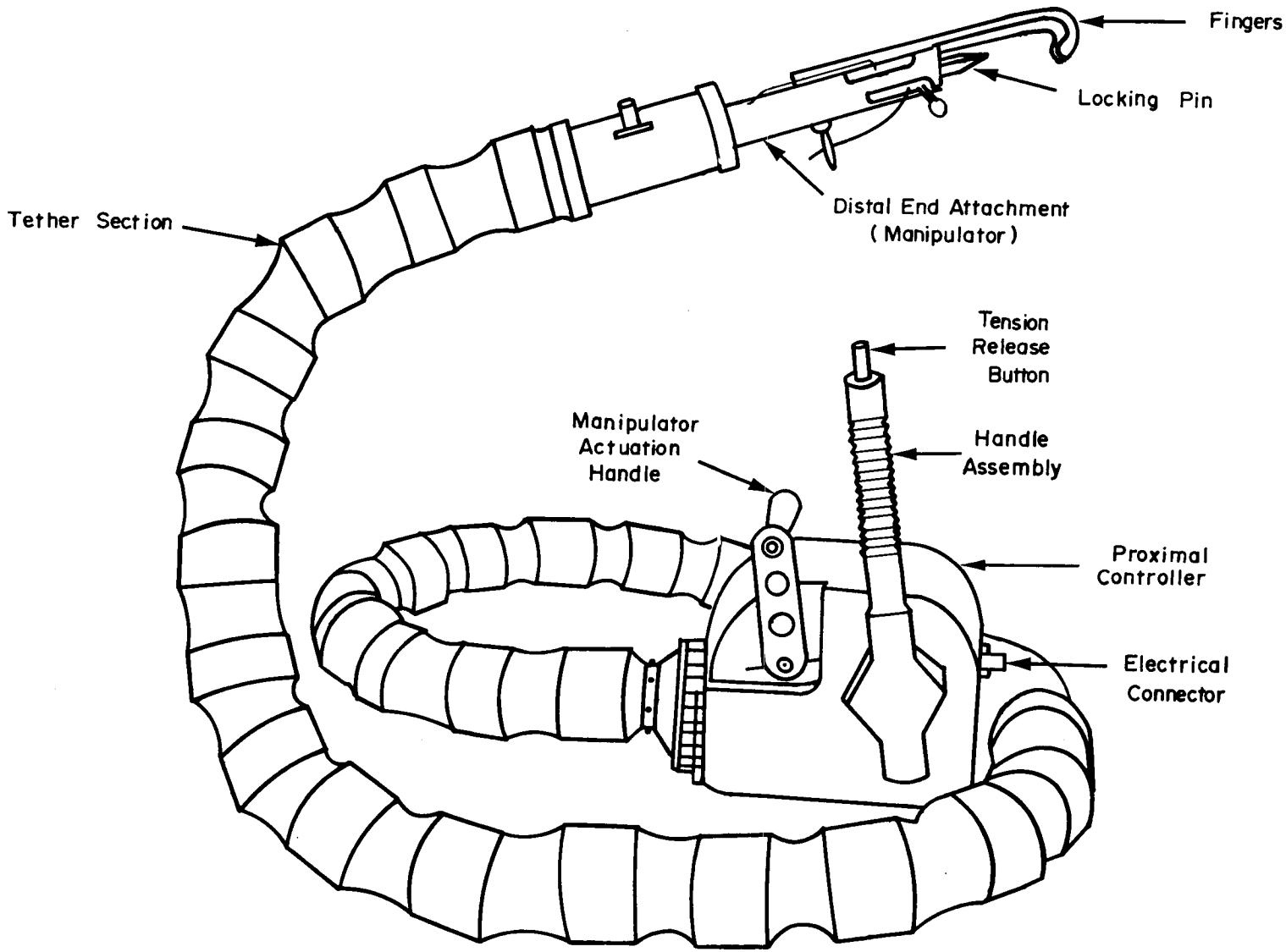

Figure 7-14. Variable Flexibility Tether System.
Drawing taken from Bibliography reference No. 60.

ZERO GRAVITY SURFACE AND INTERLOCKING STRUCTURE

A. PURPOSE: The zero gravity and interlocking structure system was designed to keep an astronaut or tools and components in place for EVA and IVA fabrication or maintenance.

B. PREVIOUS SOLUTIONS: There have been no previous space validated systems.

C. CURRENT METHOD OF OPERATION: The system consists of a primary surface referred to as the zero-gravity surface and a secondary surface called the interlocking structure which interlock and unlock upon application of small forces. The primary surface is constructed by attaching small spheres to a surface by means of elastic pins. Similar spheres or other shaped bodies are attached to the secondary surface and located at intervals equal to or greater than twice the spacing of the primary surface. The spacing is dependent on the size of the spheres used and the magnitude of the forces desired. The force desired is also controlled by the stiffness of the elastic pins, their length, and the shape, size and number of the spheres (or other shaped elements) attached to the secondary surface.

The zero gravity surface and interlocking structure can be applied on any two objects that are to be attached to one another. The primary surface can be used as a floor in a space vehicle and the secondary surface placed on the bottom of the astronaut's boot. A primary surface can be placed on a plate near a worksite and the secondary surface can be attached to hand tools.

D. RELATED FUNCTIONAL CATEGORIES: None.

E. PERFORMANCE: No record of accomplishment.

F. ADVANTAGES AND DISADVANTAGES: The zero gravity surface and the interlocking structure can be constructed of non-magnetic and non-outgassing materials and can be universally applied to any desirable area of either the interior or exterior of the spacecraft. It can be easily cleaned or sterilized and can be rigidly constructed to withstand loads of earth gravity conditions. The construction is lightweight and has no moving parts.

G. STATUS:

	Projected Date	Actual Date	Posted Date
Breadboard Model	1966	1966	1969

Developer:
George W. Brooks
National Aeronautics and Space Administration
Langley Research Center
Langley Station
Hampton, Virginia 23365

Sponsor:
National Aeronautics and Space Administration
Langley Research Center
Langley Station
Hampton, Virginia 23365

H. SPECIFICATIONS:

Primary Surface:
Sphere diameter. . . . . 0.125 in. (0.32 cm)
Distance between pins. . . . . 0.15 in. (0.40 cm)

Secondary Surface Pin:
Sphere diameter. . . . . 0.125 in. (0.32 cm)

I. SUPPORT EQUIPMENT:

Power Source: This is a manually operated tool.

Accessories: None.

J. FOR MORE INFORMATION REFER TO:

Bibliography: Personal Communications.

Tool Reference: None.

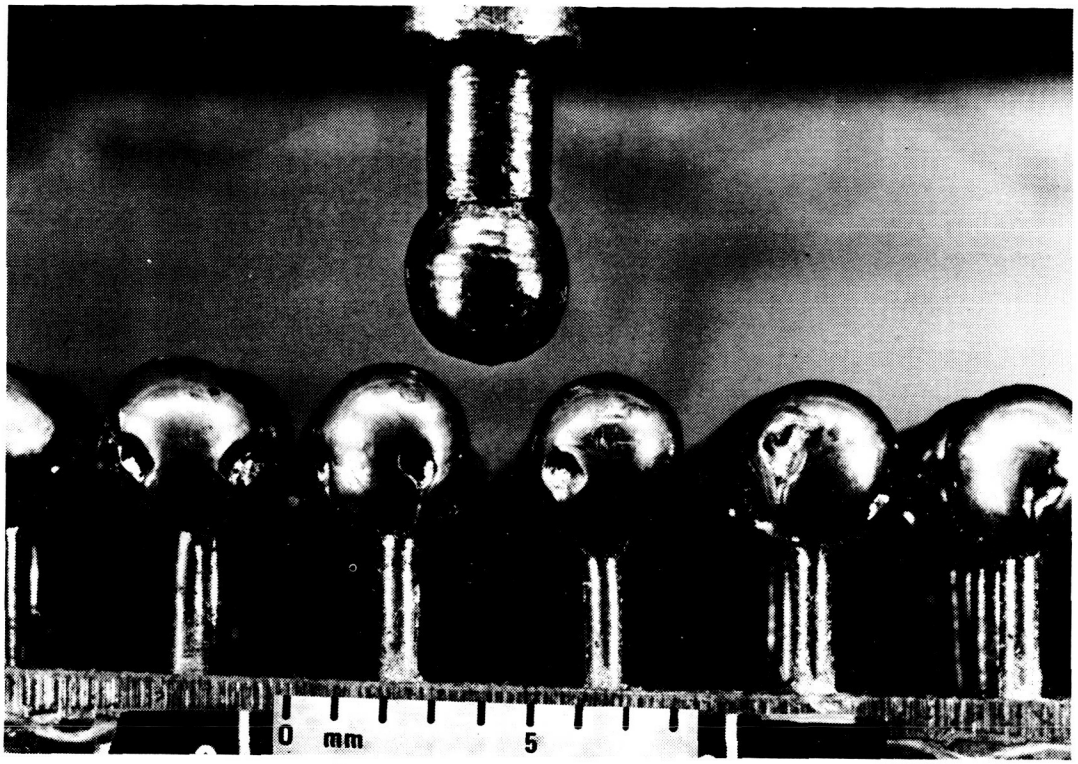

Figure 7-15a. A Sample Sphere of an Interlocking Structure Poised to Interlock with a Zero Gravity Surface. Photograph provided by the Langley Research Center.

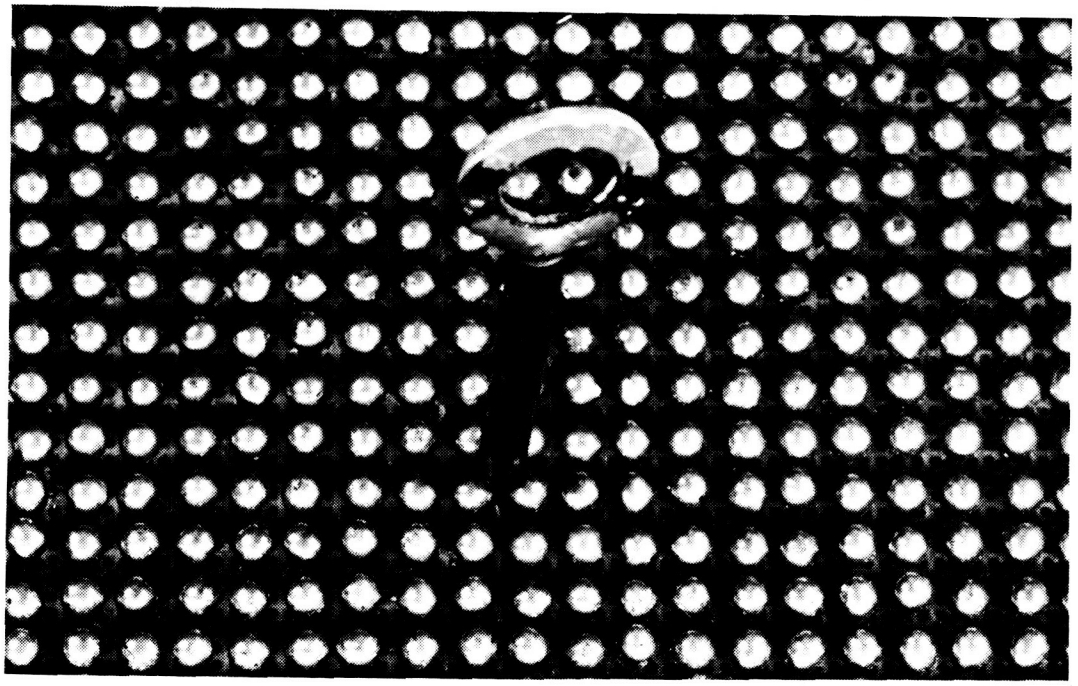

Figure 7-15b. A Sample Sphere of an Interlocking Structure Interlocking with a Zero Gravity Surface. Photograph provided by the Langley Research Center.

SECTION 8

TOOLS FOR MAINTAINING ELECTRICAL AND ELECTRONIC EQUIPMENT

These tools are required for performing electrical repairing and check-out functions. Basically, some of these tools permit squeezing, holding and positioning electrical connections and small parts. On the other hand, the wire strippers, cutters and crimpers are used for removing insulation, cutting and joining wires.

COAXIAL CABLE CUTTER

A. PURPOSE: The coaxial cable cutter was developed to cut and strip coaxial cable quickly and accurately.

B. PREVIOUS SOLUTIONS: There have been no previous space validated systems.

C. CURRENT METHOD OF OPERATION: The coaxial cable tool has sharp blades positioned to cut the shielding and insulation at the right distance from the cable end and to precisely the right depth. The tool is held in one hand, and the other hand inserts the coaxial cable into the guide-spacer tube. The handles are squeezed together and the coaxial cable is cut and stripped.

D. RELATED FUNCTIONAL CATEGORIES: 2

E. PERFORMANCE: The coaxial cable cutter has proved its usefulness and is now being manufactured commercially by a California company.

F. ADVANTAGES AND DISADVANTAGES: The advantages of the coaxial cable tool are evident in its commercial application, and probable use in space because of its high speed connector assembly operation requiring little skill by the operator.

G. STATUS:

	Projected Date	Actual Date	Posted Date
Operational Tool	1967	1967	1969
Prototype Model	1965	1965	1969

Developer:
Franklin E. Thompson
National Aeronautics and Space Administration
Ames Research Center
Moffett Field, California 94035

Manufacturer:
Western Electronic Products Co.
107 Los Molinos
San Clemonte, California

Sponsor:
National Aeronautics and Space Administration
Ames Research Center
Moffett Field, California 94035

H. SPECIFICATIONS:

Length. . . . . 6 in. (15.2 cm)

I. SUPPORT EQUIPMENT:

Power Source: This is a manually operated tool.

Accessories: None.

J. FOR MORE INFORMATION REFER TO:

Bibliography: Personal Communications.

Tool Reference: None.

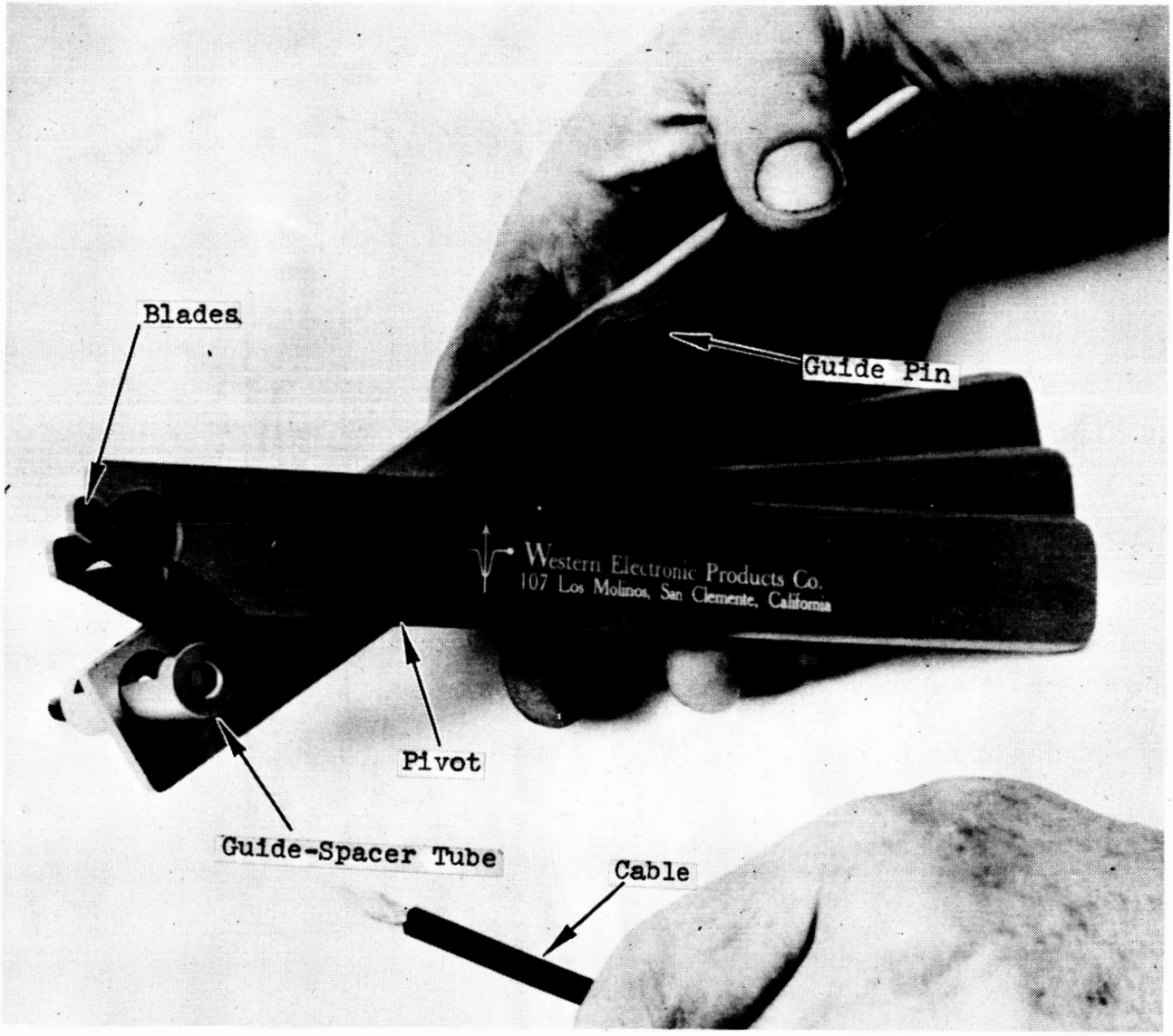

Figure 8-1. Coaxial Cable Cutter. Photograph provided by the National Aeronautics and Space Administration.

MULTIPURPOSE HAND WIRING TOOL

A. PURPOSE: The multipurpose hand wiring tool was developed to provide for four modes of operation: common pliers, wire stripper, wire cutter, and wire crimper.

B. PREVIOUS SOLUTIONS. There have been no previous space validated systems.

C. CURRENT METHOD OF OPERATION: A conventional pair of pliers was modified by the addition of a rotating cylinder on each of the plier jaws. Both cylinders have four working faces: one to function as a jaw of a common pair of pliers, one as a wire stripper jaw, another as a wire cutter jaw and another as a wire crimper jaw. To ensure proper positioning of the desired jaws, an indexing system is positioned at the leading end of each cylinder. The handles of the original pliers are enlarged and spring loaded to facilitate spacesuited operations.

D. RELATED FUNCTIONAL CATEGORIES: 2

E. PERFORMANCE: When tested with a pressurized space suit, the tool proved to be too difficult for precision work and changing from one function to another was very difficult.

F. ADVANTAGES AND DISADVANTAGES: Unavailable.

G. STATUS:

	Projected Date	Actual Date	Posted Date
Prototype Model	Unavailable	Unavailable	1969

Developer:
United States Air Force
Air Force Aero Propulsion Laboratory
Air Force Systems Command
Wright-Patterson Air Force Base, Ohio 45433

Sponsor:
United States Air Force
Air Force Aero Propulsion Laboratory
Air Force Systems Command
Wright-Patterson Air Force Base, Ohio 45433

H. SPECIFICATIONS: Unavailable.

I. SUPPORT EQUIPMENT:

Power Source: This is a manually operated tool.

Accessories: None.

J. FOR MORE INFORMATION REFER TO:

Bibliography: 33, 39

Tool Reference: None.

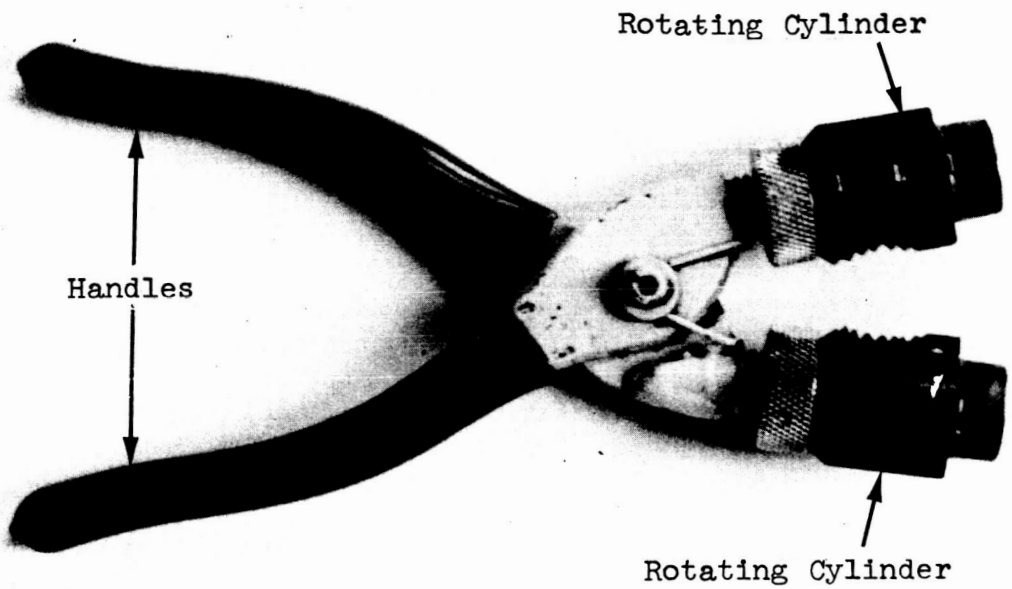

Figure 8-2. Multipurpose Hand Tool. Photograph provided by the Marshall Space Flight Center.

PROGRAM CONTROL CARD EXTRACTOR SYSTEM

A. PURPOSE: The program control card extractor system was designed to withdraw and replace program control cards from the Apollo telescope mount control computer.

B. PREVIOUS SOLUTIONS: There have been no previous space validated systems.

C. CURRENT METHOD OF OPERATION: The program control card extractor has two major parts: (1) the card-adapters and (2) the extractor. Each card-adapter is a strip of metal riveted on the end of one of the program control cards used with the Apollo telescope mount control computer. When a card is placed into an appropriate slot in the control computer, spring-loaded latch mechanisms on the computer engage the ends of a ridge located on each side of the card-adapter and hold the card-adapter and program card in place. These ridges run the length of the card-adapters and are called latch guides.

When a program card is in place in the computer, it is very difficult for an astronaut to grip the card-adapter with his fingers and pull the card out of place. Therefore, an extractor has been developed for this task.

The extractor has a D-shaped handle, an extension cylinder on the front of the handle and two facing channel members on the end of the extension cylinder. To remove a card from the computer, an astronaut holds the extractor so that a channel member is on each side of the card adapter. A quarter turn of the handle causes the channel members to clamp onto the card adapters and engage the latch guides. The astronaut can then pull the card out of place.

D. RELATED FUNCTIONAL CATEGORIES: 7

E. PERFORMANCE: No record of accomplishment.

F. ADVANTAGES AND DISADVANTAGES: The extractor has a size and shape such that it is easily manipulated by a gloved hand. It is symmetric so that the astronaut is not concerned with orientation of the extractor relative to a card. Operation of the latch mechanism is plainly visible to the astronaut.

G. STATUS:

	Projected Date	Actual Date	Posted Date
Prototype Model	1969	1969	1969

Developer:
Mr. Wlater Kuspareck
Sperry Rand Corporation
Space Support Division
716 Arcadia Circle
Huntsville, Alabama 35801

Sponsor:
National Aeronautics and Space Administration
Marshall Space Flight Center
Huntsville, Alabama 35812

H. SPECIFICATIONS:

Extractor:

Length	7 in.	(17.8 cm)
Width	7 in.	(17.8 cm)
Thickness	1.5 in.	(3.8 cm)

Adapter:

Length	4 in.	(10.2 cm)
Width	1.1 in.	(2.8 cm)
Thickness	.0.75 in.	(1.9 cm)

I. SUPPORT EQUIPMENT:

Power Source: This is a manually operated tool.

Accessories: None.

J. FOR MORE INFORMATION REFER TO:

Bibliography: 3

Tool Reference: None.

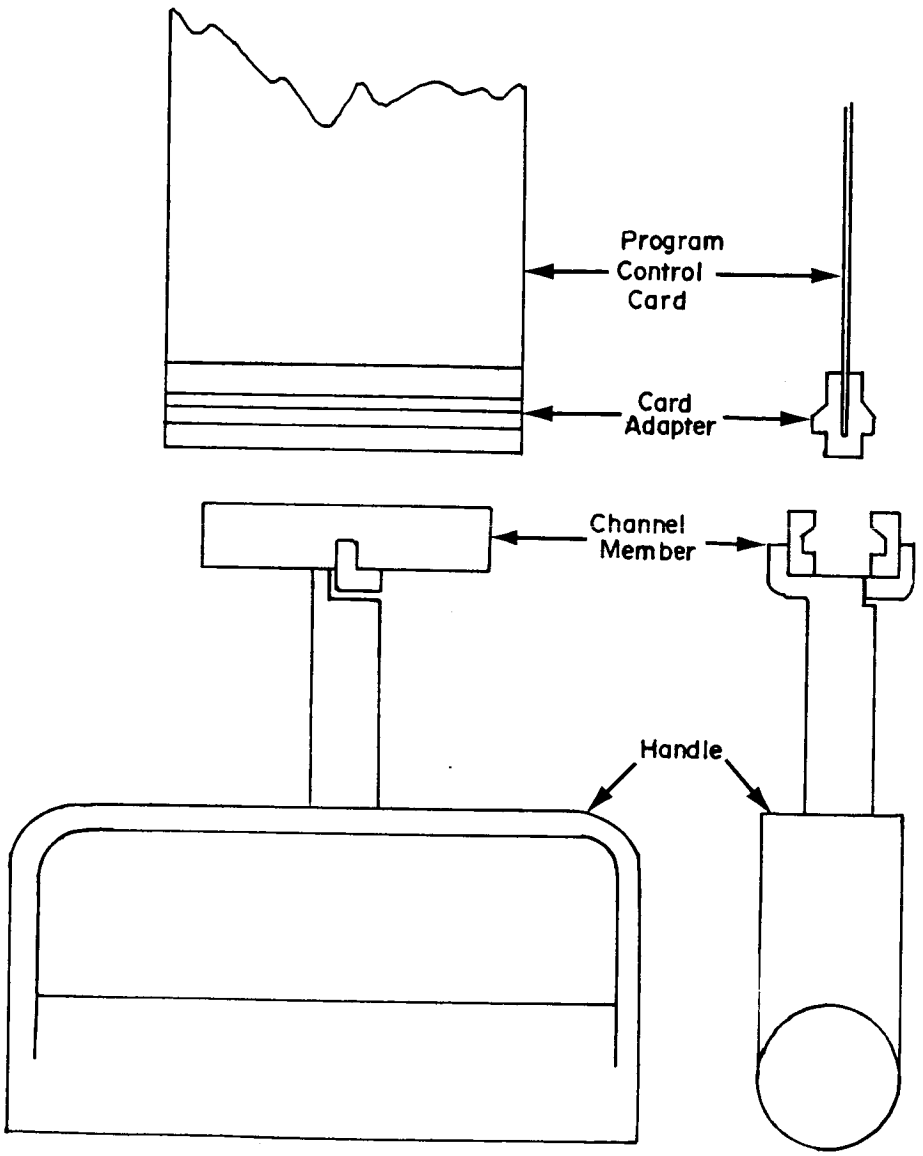

Figure 8-3. Program Control Card Extractor System. Drawing taken from Bibliography reference No. 3.

SECTION 9

TOOL KITS AND TOOL SETS

No single tool can handle all the fabrication or repair problems that an astronaut may meet in space. The astronaut needs a collection or set of tools designed to function as an integrated unit to give the astronaut a wide range of capabilities. Basically, a tool set can be particularly useful if it can be stored in a small, portable tool box to form a tool kit that can be carried by the astronaut to any worksite.

CREWMAN IN-FLIGHT TOOL SET

A. PURPOSE: The crewman in-flight tool set was designed to provide a set of tools which would fulfill the tool requirements for operation and maintenance of equipment in the Apollo command module during a mission.

B. PREVIOUS SOLUTIONS: There have been no previous space validated tool sets.

C. CURRENT METHOD OF OPERATION: The crewman in-flight tool set consists of four basic tools with five attachments and is stored in the tool and work shelf stowage drawer located in the center of the lower equipment bay of the Apollo command module. One tool, the Apollo torque wrench, is used to operate all latches, remove all screws and activate the various mechanisms that require either a 5/32 or 7/16 in. (0.40 or 1.11 cm) Allen hexagonal wrench. It also acts as a crank for operating the Astro-sextant door. Its various attachments will operate the coldplate clamps, couch adjustments and docking equipment, etc. There are two Apollo T-handles in the set. These will operate the environmental control system valves and act as handles for electronic drawer removal. The Apollo adjustable end wrench has jaws that adjust to fit nuts and bolts from 3/8 to 1 in. (0.95 to 2.54 cm).

D. RELATED FUNCTIONAL CATEGORIES: The major tools of the tool set have separate entries in this catalog. Their entries are located in the following functional categories:

1. Apollo torque wrench. 10
2. Apollo T-handle 10
3. Apollo adjustable end wrench. 10

E. PERFORMANCE: The results of tests with the individual tools are located in the performance sections of the individual tool entries.

F. ADVANTAGES AND DISADVANTAGES: Unavailable.

G. STATUS:

	Projected Date	Actual Date	Posted Date
Prototype Model	1968	1968	1969

Developer:
North American Rockwell Corporation
Space Division
12214 Lakewood Boulevard
Downey, California

Sponsor:
National Aeronautics and Space Administration
Manned Spacecraft Center
Houston, Texas 77058
Contract No. NAS 9-150

H. SPECIFICATIONS:

Material. . . . . 4340 steel bar and Inconel 718
Total weight. . . . . 2.88 lb (1.31 kg)

I. SUPPORT EQUIPMENT:

Power Source: This is a manually operated tool.

Accessories: The tool is stored in the tool and work shelf stowage drawer of the Apollo command module.

J. FOR MORE INFORMATION REFER TO:

Bibliography: Personal Communications, 3, 53

Tool Reference: See the Related Functional Categories section.

Apollo Torque Wrench

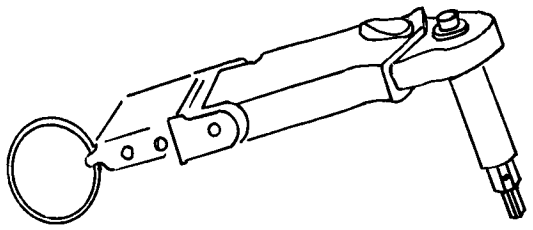

Apollo T-Handle

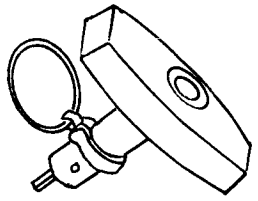

Apollo Adjustable
End Wrench

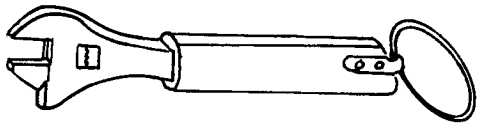

Figure 9-1. Crewman In-Flight Tool Set.
Drawing provided by North American Rockwell
Corporation.

MARTIN SPACE TOOL KIT

A. PURPOSE: The Martin space tool kit was designed to provide a set of tools with a small, portable tool container which will fulfill the minimum tool requirements for EVA and IVA repair and assembly tasks.

B. PREVIOUS SOLUTIONS: There have been no previous space validated tool kits.

C. CURRENT METHOD OF OPERATION: The tools and tool accessories of the Martin space tool kit are stored in a triangular shaped box, the Martin space tool kit case, which is carried by the astronaut by means of a nylon web strap. When the astronaut reaches a worksite, he opens the smaller lid to the case to obtain the restraint button applicator and attaches the case to the space vehicle near the worksite by means of two adhesive buttons which are attached to retracting cables located on the left side of the case. The larger lid is then opened for easy access to the tools restrained in pockets milled out of the polyurethane that fills the tool case. The major tools in the tool kit are listed in the next section.

D. RELATED FUNCTIONAL CATEGORIES: The major tools of the tool kit have separate entries in this catalog. Their entries are located in the following functional categories:

1. Martin space tool kit case. 7
2. Dead blow hammer. 3
3. Motor/handle assembly 10
4. Power drill 2
5. Power impact wrench 10
6. Power saw 2
7. Restraint buttons and applicator. 1
8. Screwdriver ratchet handle. 10
9. Small parts holder. 7
10. Small parts manipulator 7
11. Work lights 4

E. PERFORMANCE: Qualitative tests with the tool kit were conducted by a subject wearing a Mark IV pressure suit strapped in the Martin five-degree-of-freedom simulator. The results of tests with the individual tools are located in the performance sections of the individual tool entries. In general, the tools were too crowded in the case for easy removal and replacement and a great deal of difficulty was experienced in the assembling of tool components and the attaching of tool accessories to the tools. The minimum reaction tools in the tool kit still required some type of operator restraint to perform useful work. Once the operator was firmly restrained, the minimum reaction feature lost much of its value and added to the size and weight of the tools.

F. ADVANTAGES AND DISADVANTAGES: Unavailable.

G. STATUS:

	Projected Date	Actual Date	Posted Date
Prototype Model	1965	1965	1969

Developers:
Allen E. Holmes and A. L. Hamilton
Martin Company, Baltimore Division
Baltimore, Maryland 21203

Sponsor:
National Aeronautics and Space Administration
Manned Spacecraft Center
Houston, Texas 77058
Contract No. NAS 9-3161

H. SPECIFICATIONS: The specifications for the individual tools are located in the individual tool entries.

Height of the case	9.5 in. (24 cm)
Each side length of the case	14.5 in. (36.8 cm)
Battery voltage	12V
Battery current	40A
Battery capacity	163 W-hr
Recharge	50 Cycles
Total weight of the case	38 lb (17.3 kg)

I. SUPPORT EQUIPMENT:

Power Source: Eight rechargeable Yardney Silvercel Model HR-15 silver-zinc cells form the battery located in the case. This battery provided power for all the power tools in the kit. See the Specifications.

Accessories: A unit to recharge the battery is required.

J. FOR MORE INFORMATION REFER TO:

Bibliography: 17, 40, 41, 42, 71

Tool Reference: See the Related Functional Categories section.

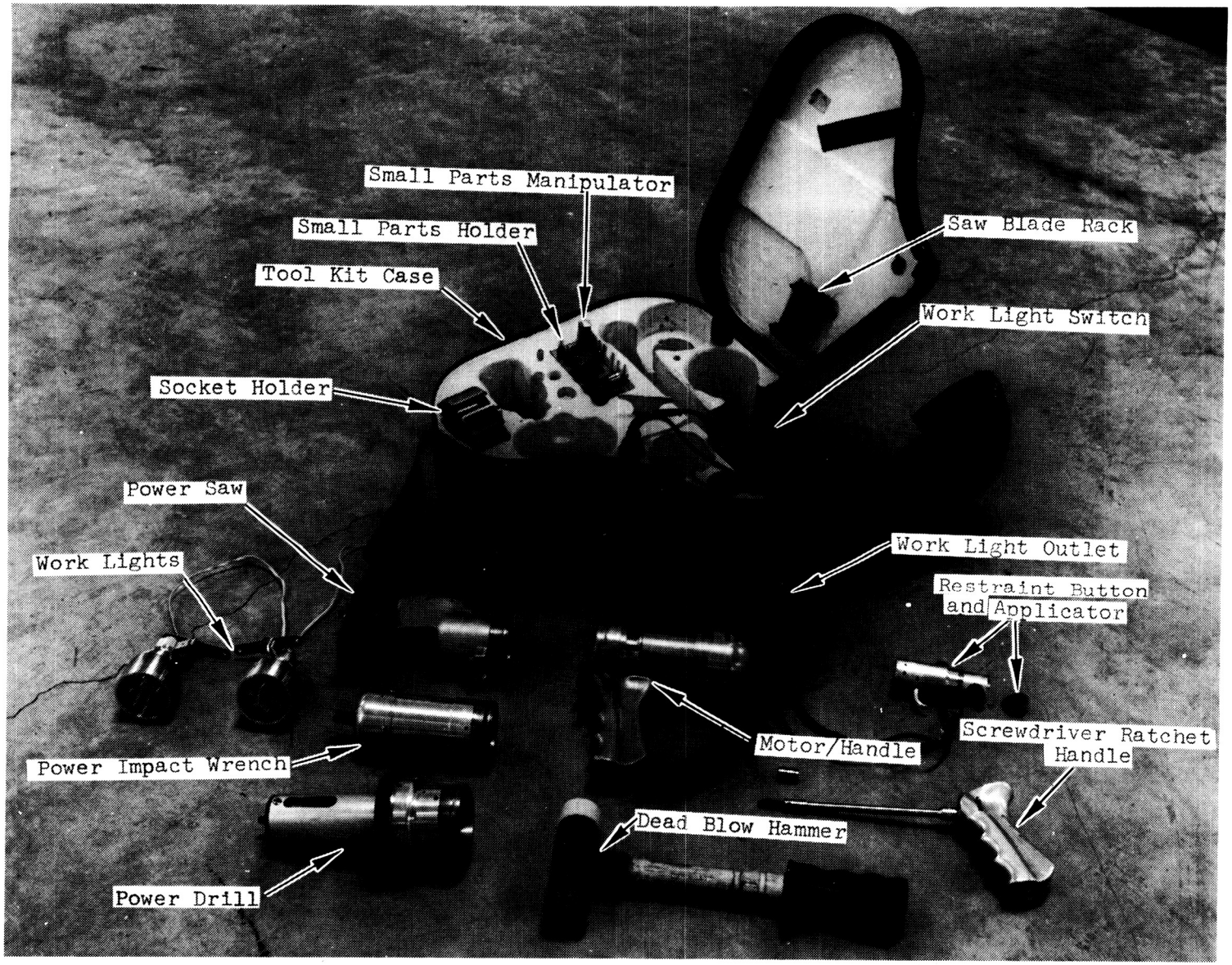

Figure 9-2. Martin Space Tool Kit. Photograph provided by the Marshall Space Flight Center.

PROTOTYPE LUNAR GEOLOGICAL TOOL KIT

A. PURPOSE: The prototype lunar geological tool kit was designed to provide a set of tools with a portable tool container which would fulfill the minimum tool requirements for lunar geological surveys on the early Apollo flights.

B. PREVIOUS SOLUTIONS: There have been no previous space validated lunar geological tool kits.

C. CURRENT METHOD OF OPERATION: The tools and the tool accessories of the prototype lunar geological tool kit are bracket mounted to the inner walls of an aluminum box, the reversible geological tool container, for storage in the LEM scientific equipment box during transit to the moon. The wall panels of the box are fastened together by hinges, so that it can be "refolded" by the astronaut on the lunar surface in such a manner that the inner walls and the bracket mounted tools are "reversed" to the outside position for easy access to the tools. A sample stowage bag can be snap-fastened to the inner walls of the box in this lunar surface configuration for temporary storage of lunar rock specimens. The box can be carried with one hand from place to place on the lunar surface. The major tools of the tool kit are listed in the next section.

D. RELATED FUNCTIONAL CATEGORIES: The major tools of the tool kit have separate entries in this catalog. Their entries are located in the following functional categories:

1. Reversible geological tool container 7
2. Sample stowage bag 6
3. Powered lunar geologist tool (PLGT) 6
4. Multipurpose geological hammer 6
5. Multipurpose scoop 6
6. Sample retriever 6
7. Orthogonal clinometer and sun gnomon assembly 6
8. Jacob staff 6
9. Modified Abney level 6
10. Coincidence image rangefinder . . . . . commercial tool/no entry included
11. Stadiametric rangefinder . . . . . commercial tool/no entry included
12. Hand lens 6
13. Color chart 6
14. Sample weighing device 6

E. PERFORMANCE: The tool kit was subjected to a number of tests including a brief "walk-through test" which was conducted with a spacesuited subject for the purpose of identifying interface problems. The results of tests with the individual tools are located in the performance sections of the individual tool entries.

F. ADVANTAGES AND DISADVANTAGES: Unavailable.

G. STATUS:

	Projected Date	Actual Date	Posted Date
Prototype Model	1965	1965	1969

Developer:
D. S. Crouch (Program Technical Director)
Martin Marietta Corporation, Denver Division
Denver, Colorado 80201

Sponsor:
National Aeronautics and Space Administration
Manned Spacecraft Center
Houston, Texas 77058
Contract No. NAS 9-3647

H. SPECIFICATIONS:

Length of the box	2 ft	(61 cm)
Width of the box	1 ft	(30.5 cm)
Thickness of the box	1 ft	(30.5 cm)
Weight of the box with tools	61.9 lb	(28.1 kg)

I. SUPPORT EQUIPMENT:

Power Source: This is a manually operated tool.

Accessories: This tool is designed to be stored in the LEM scientific equipment box.

J. FOR MORE INFORMATION REFER TO:

Bibliography: 26, 29, 32

Tool Reference: See the Related Functional Categories section.

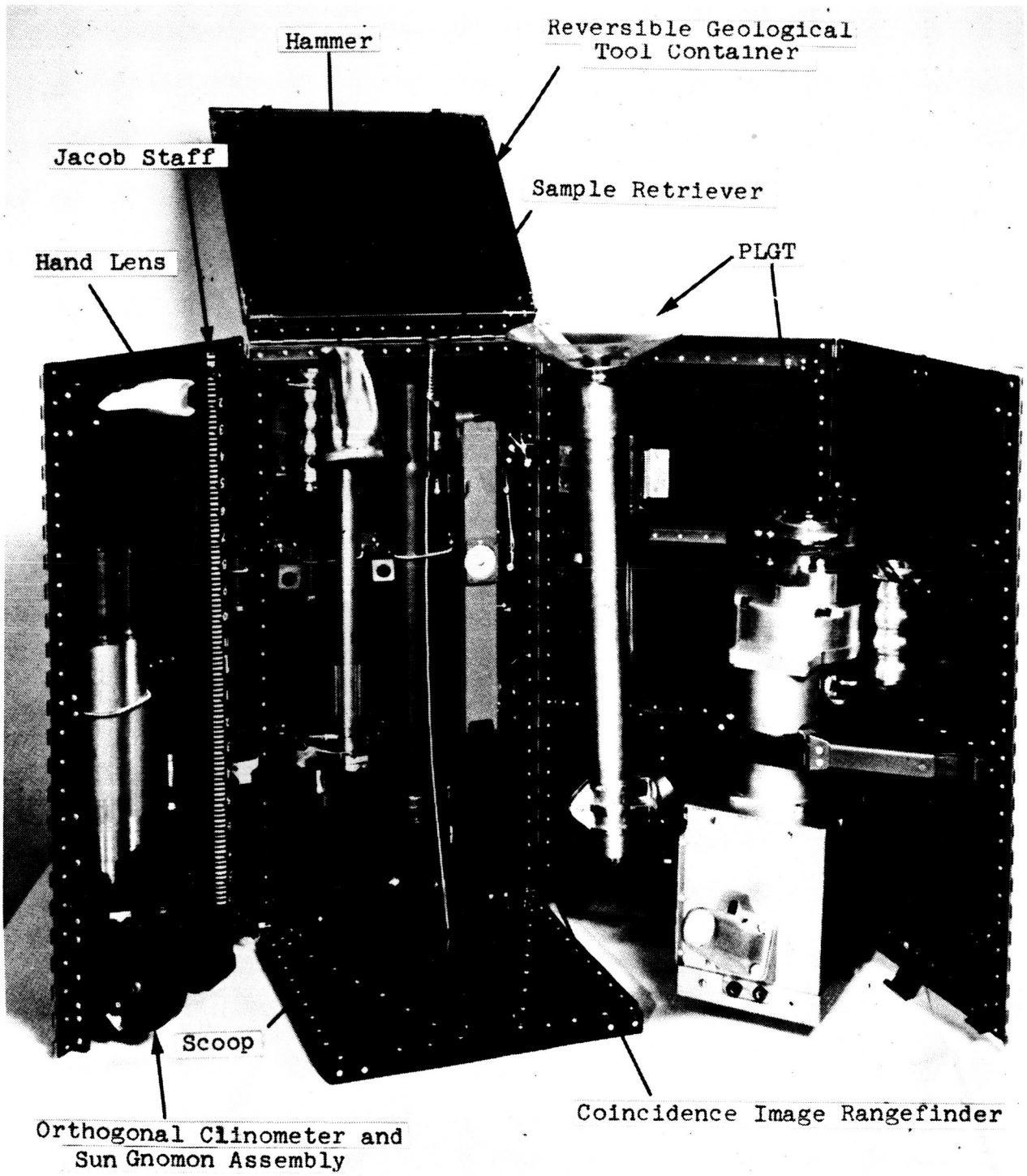

Figure 9-3. Prototype Lunar Geological Tool Kit. Photograph provided by the Martin Marietta Corporation.

SECTION 10

SCREWDRIVING AND TORQUEING TOOLS

There are a large number of assembly, fabrications and repair tasks that require the application of torque. Among these are the installation or removal of nuts, bolts, screws, hydraulic fittings, or other fasteners and the adjustment of valves and alignment mechanisms. Also in this category are general rotary drive mechanisms that drive attachments to perform the above functions and those of tools in other function categories (e.g., cutting tools).

This functional area includes rotary type tools that are classified as nut runners, screwdrivers and torque wrenches. In addition, impactor tools that turn fasteners are included.

Many of these tools were developed to reduce reactive torque to the operator, reduce operator energy expenditure, protect space suit/gloves from damage and to permit rapid tool attachment exchange and storage. Further, many tools permit a multiple tool attachment capability.

AERO JET SPACE BOLT REMOVAL TOOL (BRT)

A. PURPOSE: The Aero Jet space bolt removal tool (BRT) was designed for underwater testing and training of space workers in the removal of 5/16 in. (0.79 cm), 24-thread, 12-point head bolts. The fasteners are individually removed from a test fixture, gripped, and ejected by the tool.

B. PREVIOUS SOLUTIONS: There have been no previous space validated systems.

C. CURRENT METHOD OF OPERATION: The BRT consists of a modified 1/2 in. (1.27 cm) drive commercial impact wrench with a special power cable, a modified commercial right angle drive attachment, and a retraction unit assembly.

The impact wrench is pistol shaped and contains an electric motor and an impacting mechanism. A spring loaded trigger switch is provided for on-off operation of the tool; and a rotating cap at the aft end of the wrench is utilized as a reversing switch. The cable entering the end of the wrench handle consists of conductors and a nylon tube wrapped together inside a rubber covering. The nylon tube carries dry nitrogen to keep water out of the tool during underwater use.

The right angle drive is used to transmit the torque delivered by the impact wrench around corners to reach bolts in confined places. This unit is connected to the other two units by quick disconnect devices and can be removed so that the wrench can be used with only the retraction unit assembly.

The retraction unit assembly is equipped with a socket sized for 5/16 in. (0.79 cm), 12-point head bolts and mounted on a retraction shaft. When the socket travels up the retraction shaft as it is unthreading a bolt, a collet-type gripping mechanism housed inside the socket grips a counterbored axial hole in the bolt head and retains the bolt until the wrench is run in the opposite direction and the socket travels down the shaft again. The travel of the socket in either direction on the shaft is limited by micro switches at either end of the shaft.

The retraction unit assembly is also equipped with a guide assembly mounted to one side of the socket and the retraction shaft. The pin in the front of the guide assembly is positioned in one of the scalloped recesses of the test panel retaining the threaded bolts to help align the tool and absorb reaction forces during bolt removal.

Prior to use, the tool cable is connected to a power supply and a nitrogen supply. Then 395 $in.^3$ (6473 cm^3) of rigid plastic foam is fastened to the BRT to make it neutrally buoyant. Now, the BRT is ready for underwater use. The tool is set in reverse, the socket is engaged on the bolt head and the guide assembly pin is placed in a scalloped recess of the test panel. The operator turns the wrench on and holds the trigger switch back until the tool motor automatically shuts off. Now the bolt is retained in the socket. The operator then removes the

BRT to clear the test panel and positions the socket over a bolt container. The BRT is reset to run forward and the trigger is pressed to drive the socket out until the BRT automatically shuts off. The gripper mechanism will automatically release the bolt and eject it into the container. The BRT is reset to run in reverse and is ready to remove the next bolt.

D. RELATED FUNCTIONAL CATEGORIES: None.

E. PERFORMANCE: The tool was tested five times by a diver with simulated space gloves in an underwater task. Each test required the removal of 72 bolts torqued to 145-155 in.-lb (16.4-17.5 m-N). The tool functioned satisfactorily in each test.

F. ADVANTAGES AND DISADVANTAGES: Unavailable.

G. STATUS:

	Projected Date	Actual Date	Posted Date
Prototype Model	1967	1967	1969

Developers:
R. K. Swain (Manager and
F. R. Pecorado (Design Engineer)
Aerojet - General Corporation
Nuclear Rocket Operations
San Ramon, California 95825

Sponsor:
National Aeronautics and Space Administration
Marshall Space Flight Center'
Huntsville, Alabama 35812
Contract No. NAS 8-20796

H. SPECIFICATIONS:

Width (plus handle)	4.25 in. (10.8 cm)
Height	10.75 in. (27.3 cm)
Length	20.32 in. (51.6 cm)
Weight (without cable)	19 lb (8.6 kg)
Voltage (dc)	12V

I. SUPPORT EQUIPMENT:

Power Source: A 12 V power supply is needed.

Accessories: A test panel and bolt container are used with the tool.

J. FOR MORE INFORMATION REFER TO:

Bibliography: 56

Tool Reference: Bolt installation and removal tool.

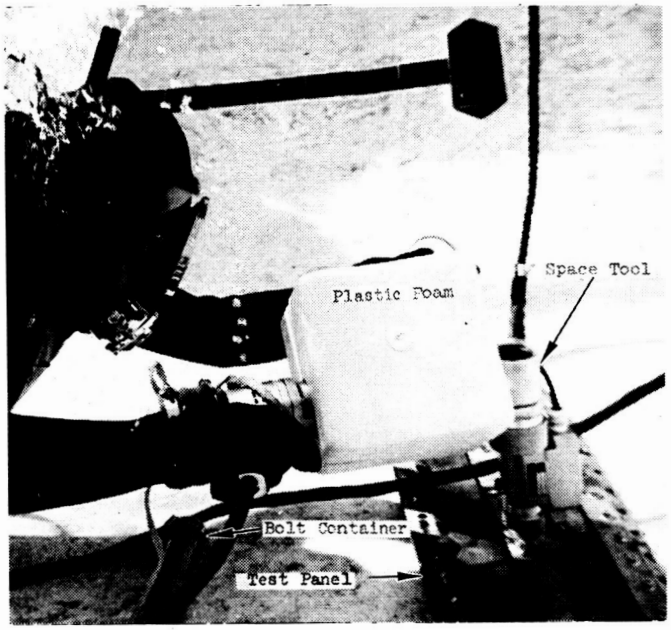

Figure 10-1a. Aero Jet Bolt Removal Tool Used in Underwater Simulation. Photograph provided by the Marshall Space Flight Center.

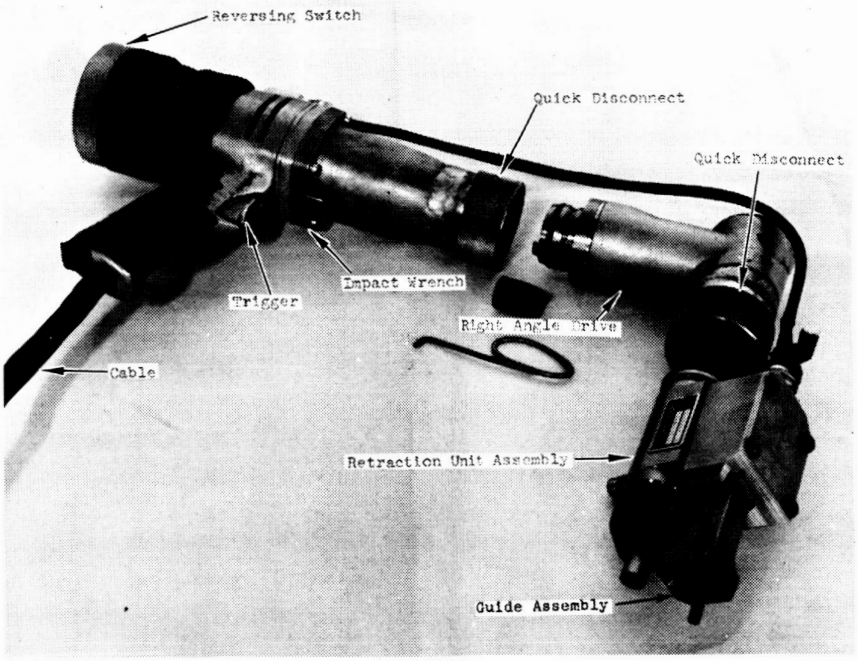

Figure 10-1b. Aero Jet Bolt Removal Tool. Photograph provided by the Marshall Space Flight Center.

APOLLO ADJUSTABLE END WRENCH

A. PURPOSE: The Apollo adjustable end wrench was designed for use on 3/8 to 1 in. (0.95 to 2.54 cm) nuts and bolts in the Apollo command module.

B. PREVIOUS SOLUTIONS: There have been no previous space validated tools.

C. CURRENT METHOD OF OPERATION: The Apollo adjustable end wrench is a simple adjustable wrench. The jaws can be easily adjusted to any size between 3/8 to 1 in. (0.95 to 2.54 cm) when there is no load applied to them. However, once they are on a nut or bolt and torque is applied they lock into position.

D. RELATED FUNCTIONAL CATEGORIES: None.

E. PERFORMANCE: No record of accomplishment.

F. ADVANTAGES AND DISADVANTAGES: Unavailable.

G. STATUS:

	Projected Date	Actual Date	Posted Date
Prototype Model	1968	1968	1969

Developer:
North American Rockwell Corporation
Space Division
12214 Lakewood Boulevard
Downey, California

Sponsor:
National Aeronautics and Space Administration
Manned Spacecraft Center
Houston, Texas 77058
Contract No. NAS 9-150

H. SPECIFICATIONS:

Jaw opening. . . . . 3/8 to 1 in. (0.75 to 2.54 cm)

I. SUPPORT EQUIPMENT:

Power Source: This is a manually operated tool.

Accessories: The tool is stored in the tool and work shelf stowage drawer of the Apollo command module.

J. FOR MORE INFORMATION REFER TO:

Bibliography: Personal Communications.

Tool Reference: Crewman in-flight tool set.

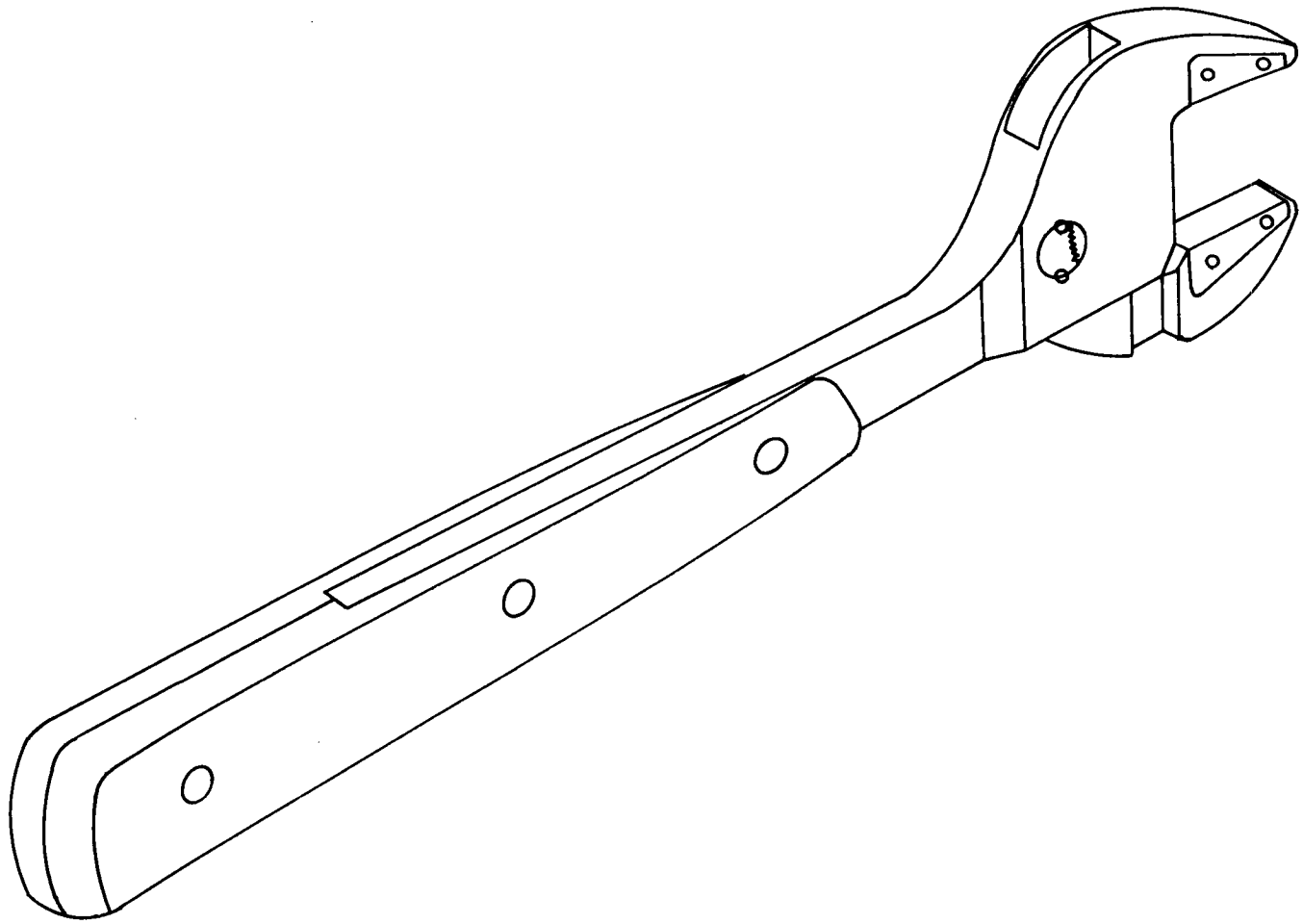

Figure 10-2. Apollo Adjustable End Wrench. Drawing provided by the North American Rockwell Corporation.

APOLLO IN-FLIGHT MAINTENANCE TOOL

A. PURPOSE: The Apollo in-flight maintenance tool was designed to be the only tool required to repair the Apollo stabilization and control system (SCS) in the Apollo command module while the module is in flight.

B. PREVIOUS SOLUTIONS: There have been no previous space validated systems.

C. CURRENT METHOD OF OPERATION: The Apollo in-flight maintenance tool is a small, light tool intended to meet all the tool requirements for removal and replacement of defective modules of the Apollo stabilization and control system (SCS). The main body of the tool is a rectangular solid. In the front end there is a ratchet mechanism with a male hexagonal drive. This ratchet drive mechanism is used to loosen or tighten center jackscrews on interface connectors. It is also used, with or without one of three different length male hexagonal wrench attachments, to loosen and tighten clamps, mounting bolts, and CALFAX fasteners which hold various modules of the SCS in place. In the back end of the main body there is a handle which folds down out of the way into a cavity in the main body when it is not in use and which can be folded up for use as a crank to apply torque to the ratchet drive mechanism. At the very back of the main body there is a wedge shaped card extraction tip which is used to pry electronic control assembly (ECA) card modules into and out of their slots in card banks (called electronical control assemblies). The in-flight maintenance tool can also serve as a handle to be fastened to an electronic control assembly so that it can be pulled out of place and carried by means of the handle to a work table. The astronaut inserts the male drive into a ball socket on the front of the module until it locks into position, folds the crank handle down, grips the main body of the tool and pulls the module out of place.

D. RELATED FUNCTIONAL CATEGORIES: 7, 8

E. PERFORMANCE: The tool was used in a series of laboratory tests in which shirt-sleeve and pressure suited test subjects performed various repair tasks. These tasks were successfully completed in satisfactory periods of time.

F. ADVANTAGES AND DISADVANTAGES: Unavailable.

G. STATUS:

	Projected Date	Actual Date	Posted Date
Prototype Model	1964	1964	1969

Developer:
North American Rockwell Corporation
Space Division
12214 Lakewood Boulevard
Downey, California 90241

Sponsor:
National Aeronautics and Space Administration
Manned Spacecraft Center
Houston, Texas 77058

H. SPECIFICATIONS:

Length	5.32 in.	(13.5 cm)
Height (handle folded)	3.38 in.	(8.6 cm)
Drive	3/8 in.	(0.95 cm)
Attachment No. 1 length	22.12 in.	(56.2 cm)
Attachment No. 2 length	13.62 in.	(34.6 cm)
Attachment No. 3 length	4.0 in.	(10.2 cm)

I. SUPPORT EQUIPMENT:

Power Source: This is a manually operated tool.

Accessories: Three male hexagonal wrench attachments of different lengths are used. The tool was to be stored in the tool stowage drawer in the lower equipment bay.

J. FOR MORE INFORMATION REFER TO:

Bibliography: 2, 59, 67

Tool Reference: None.

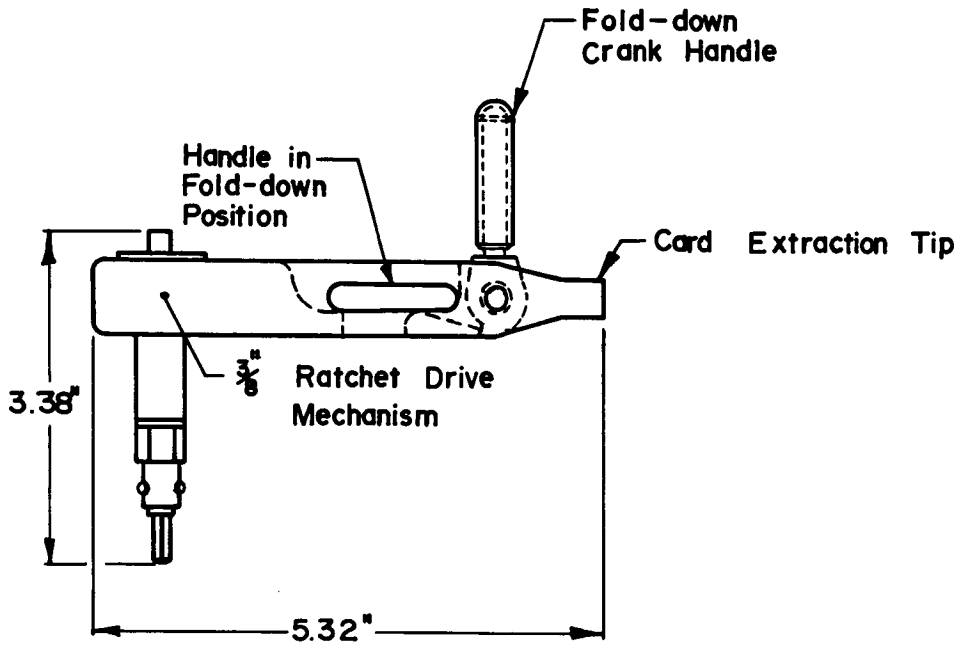

Figure 10-3a. Apollo In-Flight Maintenance Tool. Drawing taken from Bibliography reference No. 2.

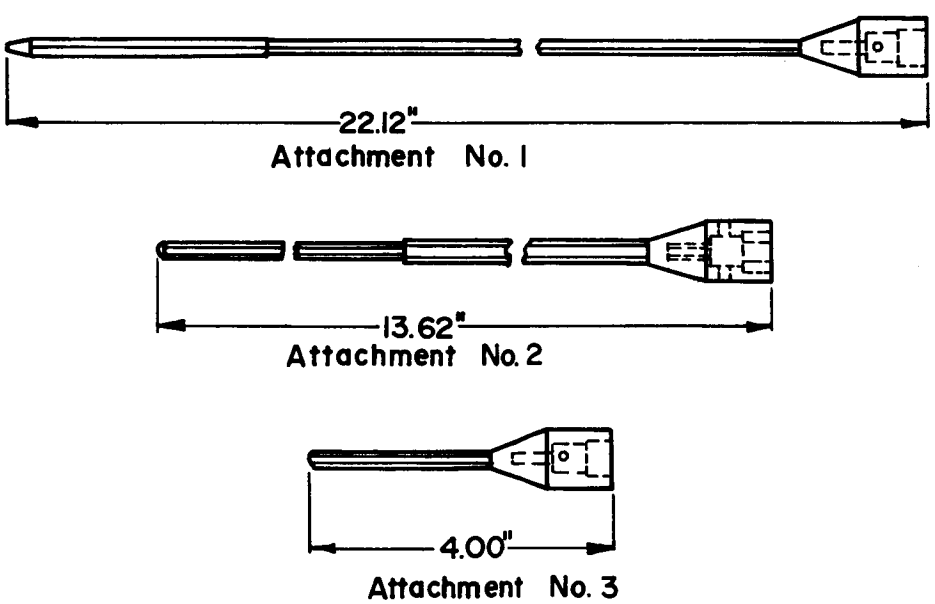

Figure 10-3b. Attachments for the Apollo In-Flight Maintenance Tool. Drawing taken from Bibliography reference No. 2.

APOLLO T-HANDLE

A. PURPOSE: The T-handle was designed to operate the environmental control system valves and act as a handle for electronic drawer removal during in-flight operation and maintenance of the Apollo command module.

B. PREVIOUS SOLUTIONS: There have been no previous space validated tools.

C. CURRENT METHOD OF OPERATION: The T-handle is a small, T-shaped tool. The top of the T serves as a handle and the stem of the T serves as a drive shaft. When the handle is turned, torque is transmitted to the shaft through an adjustable spring and roller mechanism in the handle. This mechanism limits the maximum torque that can be applied and is adjusted by turning a threaded spring seat located at one end of the handle with a screwdriver. At the bottom of the drive shaft, there is a 3/8 in. (0.95 cm) ball lock and a 5/32 in. (0.40 cm) male hexagonal wrench tip. On top of the handle just above the drive shaft there is a ball lock release button that is actuated by an astronaut's thumb.

Two T-handles are included as part of the crewman in-flight tool set and they are used for two important tasks. The T-handle can be fastened to the front of an electronic drawer module located in the lower equipment bay to serve as a handle with which an astronaut can pull the drawer out of place and carry it to a work shelf. The ball lock release button is pressed so that the ball lock can slip into a receptacle on the front of an electronic drawer module. The button is then released to lock the T-handle in place to be used as a handle. When the tool is to be disconnected, the release button is pressed again and the tool is pulled from the drawer receptacle. The tool can be also used to operate the environmental control system valves. The male wrench tip is simply placed in the female valve receptacle and the handle is rotated.

D. RELATED FUNCTIONAL CATEGORIES: 7, 8

E. PERFORMANCE: No record of accomplishment.

F. ADVANTAGES AND DISADVANTAGES: Unavailable.

G. STATUS:

	Projected Date	Actual Date	Posted Date
Prototype Model	1968	1968	1969

Developer:
North American Rockwell Corporation
12214 Lakewood Boulevard
Space Division
Downey, California 90241

Sponsor:
National Aeronautics and Space Administration
Manned Spacecraft Center
Houston, Texas 77058
Contract No. NAS 9-150

H. SPECIFICATIONS:

Drive length.	2.41 in. (6.12 cm)
Drive diameter.	0.43 in. (1.1 cm)
Handle length	2.1 in. (5.3 cm)
Handle width.	0.70 in. (1.8 cm)
Ball lock diameter.	3/8 in. (0.95 cm)
Male tip size	5/32 in. (0.40 cm)

I. SUPPORT EQUIPMENT:

Power Source: This is a manually operated tool.

Accessories: The tool is stored in the tool and work shelf stowage drawer in the lower equipment bay of the Apollo command module. A screwdriver is used to adjust the maximum torque that can be applied by the tool.

J. FOR MORE INFORMATION REFER TO:

Bibliography: Personal Communications.

Tool Reference: Crewman in-flight tool set.

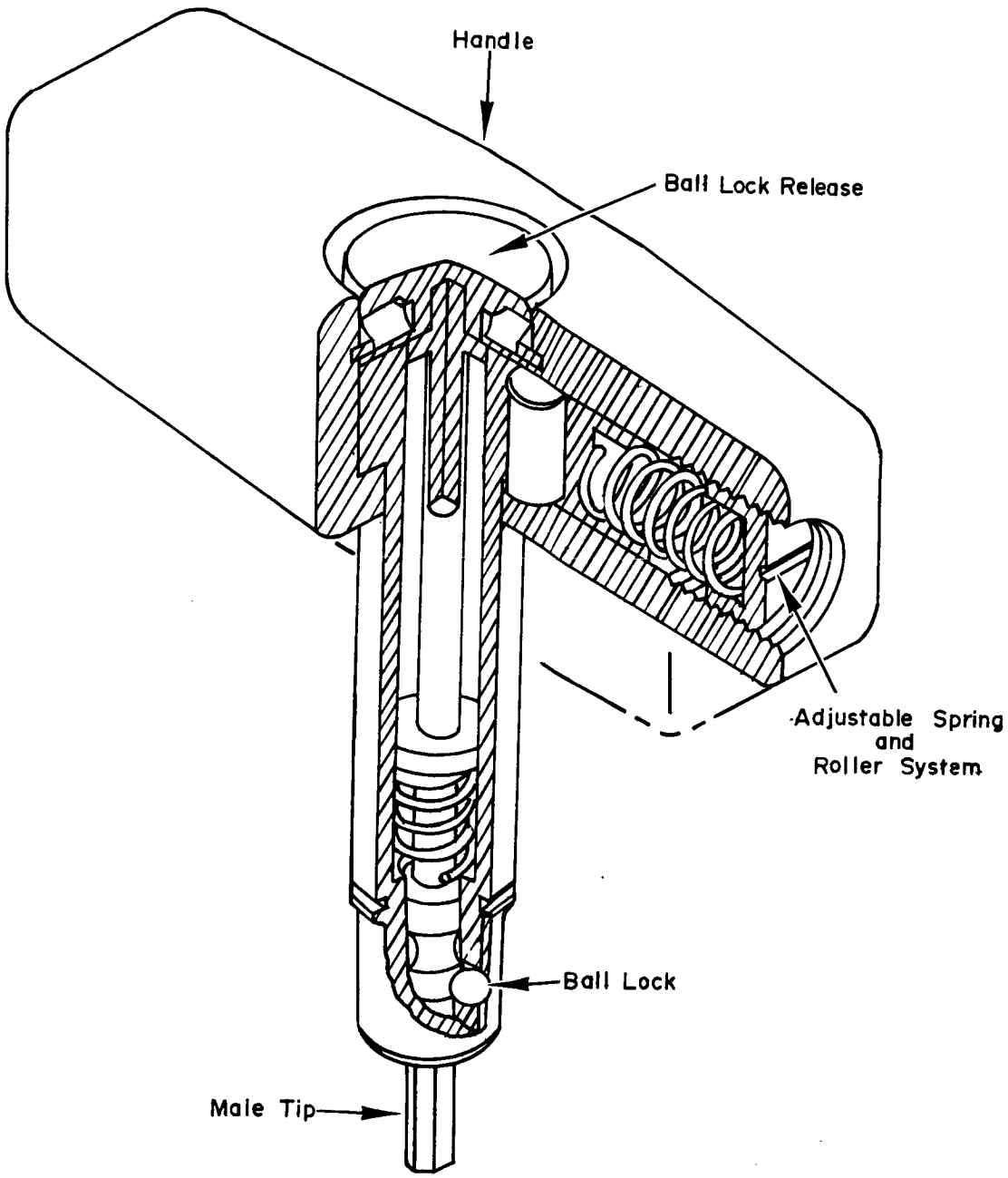

Figure 10-4. Apollo T-Handle. Drawing provided by North American Rockwell Corporation.

APOLLO TORQUE WRENCH

A. PURPOSE: The Apollo torque wrench was designed to limit the amount of torque that is applied to remove and replace threaded fasteners, to serve as a crank for operating the astro-sextant, and to activate various mechanisms that require an Allen hexagonal wrench or a screwdriver.

B. PREVIOUS SOLUTIONS: There have been no previous space validated tools.

C. CURRENT METHOD OF OPERATION: The Apollo torque wrench is part of the crewman in-flight tool set and will be stored in the tool and work shelf stowage drawer located in the lower equipment bay of the Apollo command module. It is basically a ratchet wrench designed to "break free" when a pre-set value of torque is exceeded. This torque value is established by pulling back the handle extension and rotating it in unit turns of 180 deg. As the handle is rotated, a white marker moves up a coded gauge in the front of the wrench and rotation of the handle is stopped when the code for 50, 100, 150 or 200 in.-lb (5.65, 11.3, 17.0 or 22.6 m-N) is reached. If the handle extension is pulled back further past a detent, it can be turned up to be used as a crank knob. The drive end consists of 7/16 and 5/32 in. (1.11 and 0.40 cm) male hexagonal wrench heads with a ball lock for attaching extension attachments. The ball lock is controlled by the ball lock release button which is pressed by the astronaut's thumb when an attachment is attached or removed. The direction in which the wrench ratchets is controlled by a ratchet lever at the back of the tool.

D. RELATED FUNCTIONAL CATEGORIES: None.

E. PERFORMANCE: The Apollo torque wrench was used in the Gemini XII flight to exert a torque greater than 100 in.-lb (11.3 m-N) with the use of a hand and a wrist tether by the astronaut.

F. ADVANTAGES AND DISADVANTAGES: Unavailable.

G. STATUS:

	Projected Date	Actual Date	Posted Date
Prototype Model	1968	1968	1969

Developer:
North American Rockwell Corporation
Space Division
12214 Lakewood Boulevard
Downey, California 90241

Sponsor:
National Aeronautics and Space Administration
Manned Spacecraft Center
Houston, Texas 77058
Contract No. NAS 9-150

H. SPECIFICATIONS:

Length	6.25 in. (15.9 cm)
Width	1.5 in. (3.8 cm)
Thickness	0.75 in. (1.91 cm)
Drive length	3.25 in. (8.26 cm)

I. SUPPORT EQUIPMENT:

Power Source: This is a manually operated tool.

Accessories: The tool is stored in the tool and work shelf stowage drawer of the Apollo command module. There are five attachments that can be used with the tool. Attachment No. 1-A is an adapter for operating the Astro-Sextant Door. Attachment No. 2 is a 20 in. (50.8 cm) extension with a 7/32 in. (0.56 cm) hexagonal tip. Attachment No. 3 is a 10 in. (25.4 cm) extension with a 5/32 in. (0.40 cm) tip. Attachment No. 4 is a 5-1/8 in. (13.0 cm) extension with a universal joint, and 7/16 and 5/32 in. (1.11 and 0.40 cm) male hexagonal wrench ends. And finally, attachment No. 5-A is a 5-1/8 in. (13.0 cm) extension with a 4 in. (10.2 cm) hexagonal section measuring 7/32 in. (0.56 cm) across the flats.

J. FOR MORE INFORMATION REFER TO:

Bibliography: Personal correspondence, 1, 53

Tool Reference: Crewman in-flight tool set.

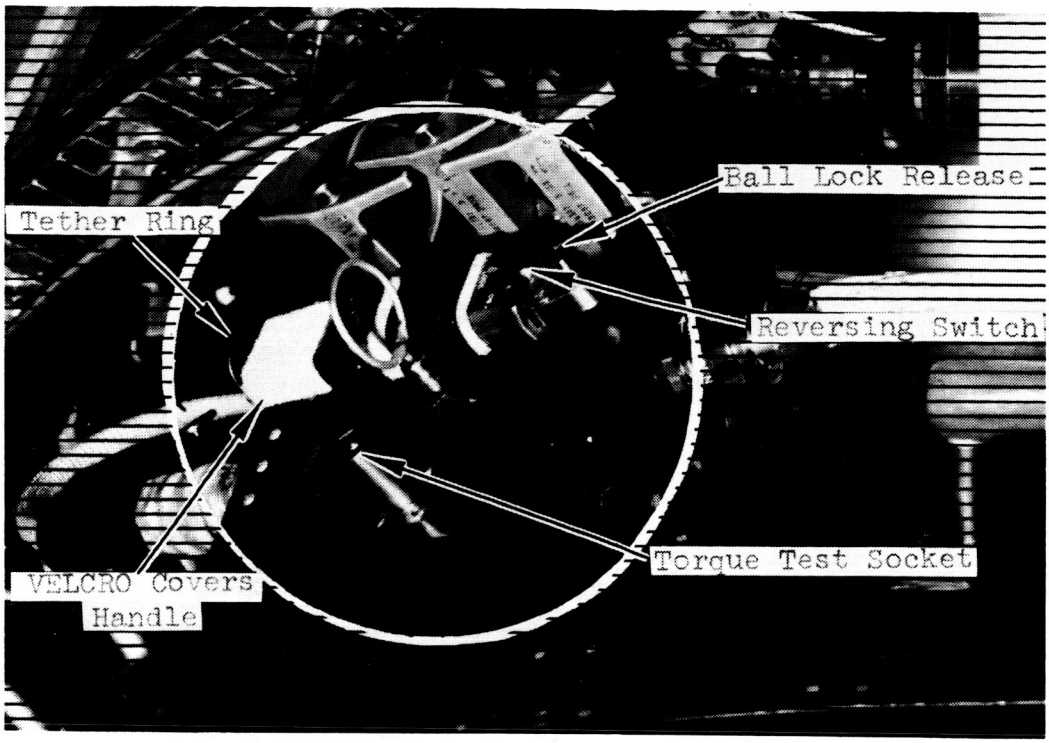

Figure 10-5a. Top View of the Apollo Torque Wrench. Photograph provided by the National Aeronautics and Space Administration.

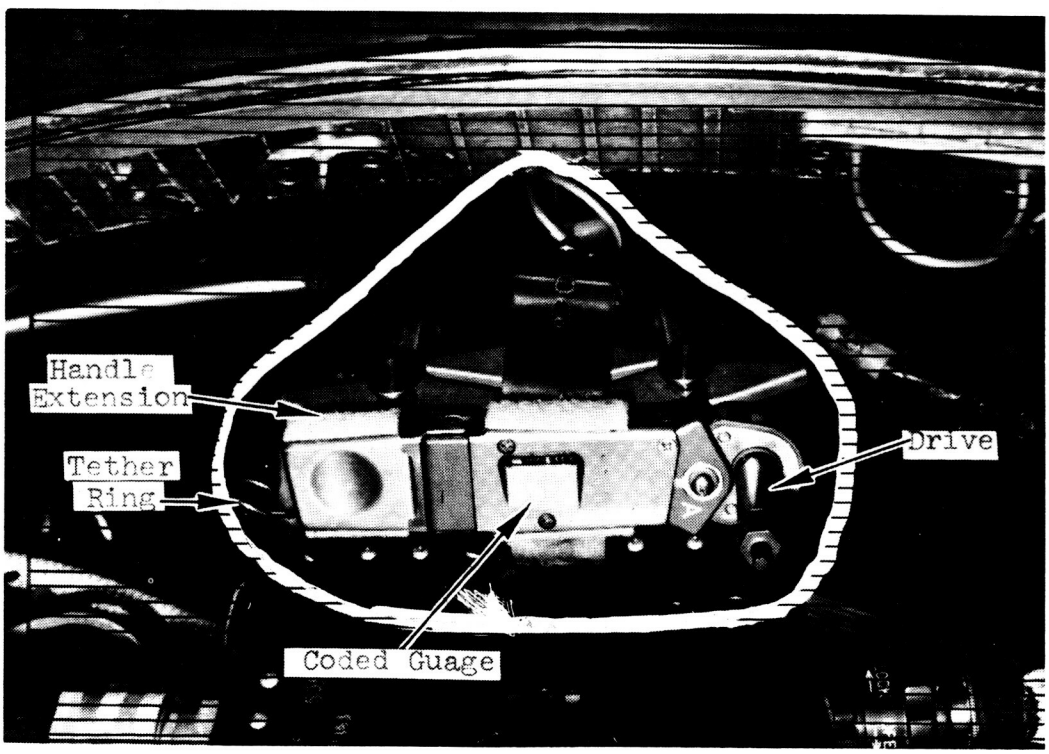

Figure 10-5b. Bottom View of the Apollo Torque Wrench. Photograph provided by the National Aeronautics and Space Administration.

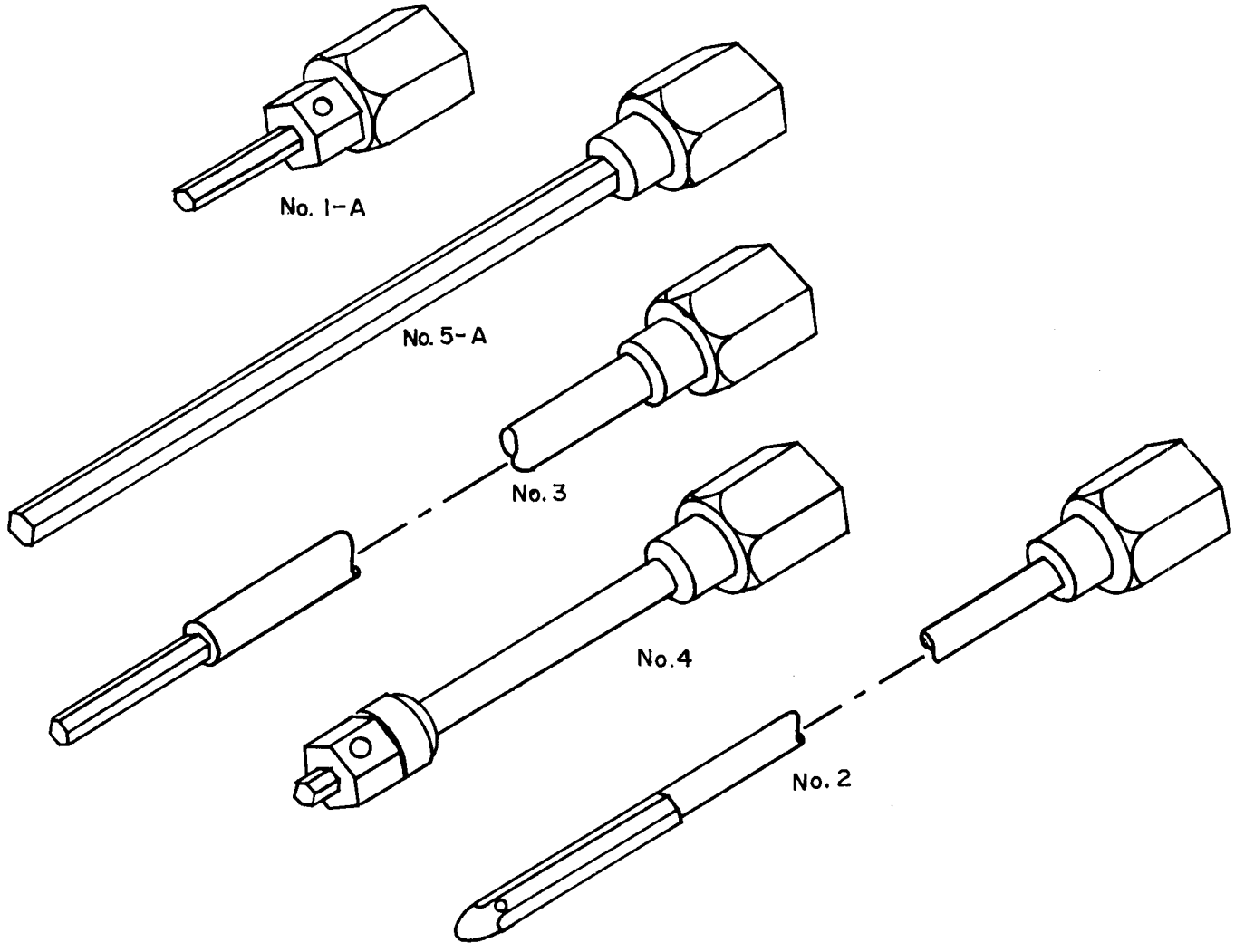

Figure 10-5c. Attachments for the Apollo Torque Wrench. Drawing provided by North American Rockwell Corporation.

BOEING TORQUE CANCELLING TOOL

A. PURPOSE: The Boeing torque cancelling tool was designed as a ratcheting, zero-reaction socket wrench for space operations.

B. PREVIOUS SOLUTIONS: There have been no previous space validated systems.

C. CURRENT METHOD OF OPERATION: The Boeing torque cancelling tool is a simple ratchet wrench with two handles. An astronaut operates the tool by placing a hand on each handle and alternately pushing them towards each other and then pulling them apart just as the handles on a pair of scissors are operated. Thus, reaction forces on the operator from the tool are opposed and tend to cancel one another. The motion of the handles is transferred into a rotation of the socket drive by means of a ratchet mechanism. This mechanism does not have a reversing switch. Reversal of the direction of socket motion is accomplished by removing it from one end of the socket drive and placing it on the other end which protrudes out the other side of the tool. Reaction torques on the tool from the fastener are transmitted back to the worksite by an accessory bar on the tool which can be extended to come into physical contact with a protrusion from the worksite. When not in use, the tool is designed to be stored in a minimum of space. The accessory bar is retracted and the handles fold up close to the body of the tool.

D. RELATED FUNCTIONAL CATEGORIES: None.

E. PERFORMANCE: No record of accomplishment.

F. ADVANTAGES AND DISADVANTAGES: The tool requires the use of both the astronaut's hands and a nearby protrusion is needed to cancel reaction torques.

G. STATUS:

	Projected Date	Actual Date	Posted Date
Breadboard Model	1965	1965	1969

Developers:
J. Belknap, O. Gells and C. E. Kouces
The Boeing Company
Aerospace Group
Space Division Kent Facility
P. O. Box 3868
Seattle, Washington 98124

Sponsor:
The Boeing Company
Aerospace Group
Space Division Kent Facility
P. O. Box 3868
Seattle, Washington 98124
Work Order No. 8-23542

H. SPECIFICATIONS:

	Open	Folded
Length	22 in. (55.8 cm)	8 in. (20.6 cm)
Width	14 in. (35.5 cm)	9.5 in. (24.3 cm)
Thickness	3 in. (7.6 cm)	3 in. (7.6 cm)

I. SUPPORT EQUIPMENT:

Power Source: This is a manually operated tool.

Accessories: Several different size sockets are used with the tool.

J. FOR MORE INFORMATION REFER TO:

Bibliography: Personal Communications.

Tool Reference: Martin zero reaction space wrench, nut and bolt wrench, pliers-wrench (PLENCH).

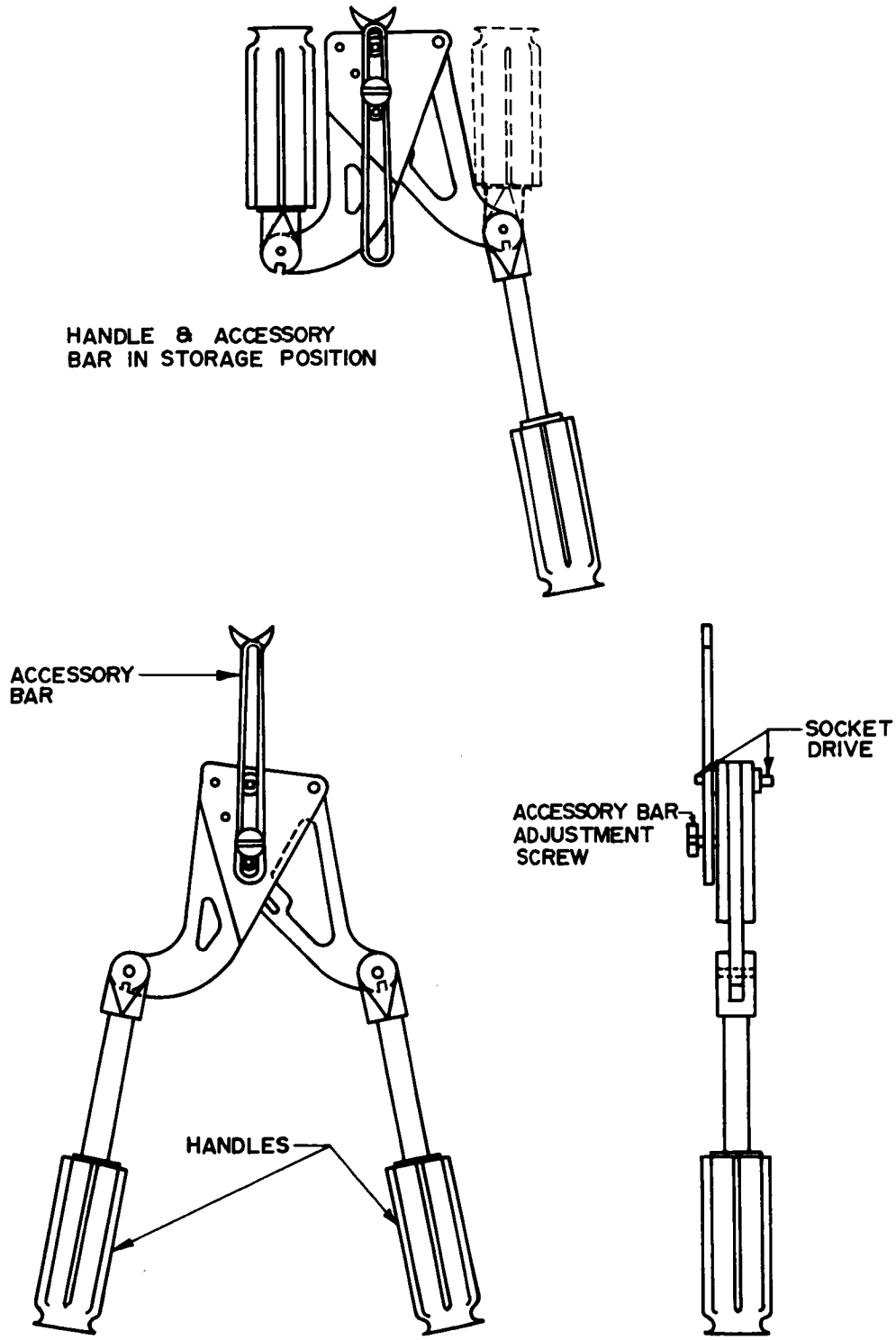

Figure 10-6. Boeing Torque Cancelling Tool.
Drawings provided by the Boeing Company.

BOLT INSTALLATION AND REMOVAL TOOL (BIRT)

A. PURPOSE: The bolt installation and removal tool (BIRT) is designed for laboratory testing and training of space workers in the installation and removal of several sizes of 12-point, externally wrenched bolts which are gripped by the tool during installation and retained during removal.

B. PREVIOUS SOLUTIONS: Aero Jet space bolt removal tool.

C. CURRENT METHOD OF OPERATION: The BIRT system consists of an impact wrench, several socket assemblies (each for a different size bolt), and an electrical control unit (ECU). A quick disconnect clamp is used to attach a socket assembly to the impact wrench and a cable connects the wrench to the control unit.

Each socket assembly is equipped with a socket sized to the bolt for which it will be used, a collet-type gripping device to retain the bolt during tool operation and a torsion bar. Drive and retraction motion of the socket is achieved through a threaded drive. Release of the bolt is achieved by the relaxation of the spring-loaded collet gripping device when the socket reaches the extended position.

A spring-loaded trigger type switch is provided on the wrench handle for on-off operation of the tool. A two position toggle switch is also on the wrench handle for forward and reverse operation of the tool.

The wrench draws power from a power supply through the ECU. The ECU monitors the power drain of the wrench and regulates the length of time the tool impacts. The impacting cycle can be set to last for 0-30 sec by a knob on the side of the unit. The ECU timer activates when the power drain increases as the wrench begins to impact. The length of the impacting cycle, determines the torque value to which the bolt is tightened. When the reversing switch is in the reverse position, the timer is not in the electric circuit and an unlimited impact time is permitted during bolt removal. There is also a timer in/out switch on the ECU.

When a bolt is to be installed, the bolt is placed into the socket when the latter is in the fully extended position. The wrench is run in reverse and the gripping mechanism grips the bolt as the socket runs back to the retracted position in the socket assembly. Then the wrench is run forward and the threads of the bolt are engaged with those of the hole. The bolt threads into the hole and is impacted to the correct torque after which the tool is automatically shut off. Since the socket is again in the extended position, the gripping mechanism releases the bolt and the tool can be removed.

When a bolt is to be removed, the socket, which is in the extended position, is placed over the bolt and the tool is run in reverse. As the socket retracts and the bolt is removed, the gripping mechanism grips the bolt. The tool is then run forward to eject the bolt into a bolt container.

D. RELATED FUNCTIONAL CATEGORIES: None.

E. PERFORMANCE: Five second impacts produced the following torque settings:

Socket Assembly	Bolt	Torque
5/16 in. (0.79 cm)	MS21250H05004	140-200 in.-lb (15.8-22.6 m-N)
1/2 in. (1.27 cm)	MS21250H08804	700-950 in.-lb (79.1-107 m-N)

F. ADVANTAGES AND DISADVANTAGES: The gripping device retains bolts, eliminating manual operation. However, the system requires special heads on the bolts with axial holes in them. Different size bolts require different socket assemblies.

G. STATUS:

	Projected Date	Actual Date	Posted Date
Prototype Model	1969	1969	1969

Developer:
R. K. Swain
Aerojet - General Corporation
Nuclear Rocket Operations
San Ramon, California 95825

Sponsor:
National Aeronautics and Space Administration
Marshall Space Flight Center
Huntsville, Alabama 35812
Contract No. 8-30026

H. SPECIFICATIONS:

Maximum diameter. . . . . 3 1/8 in. (7.9 cm)
Length (with 1/2-20 socket assembly). . . 15 1/4 in. (38.7 cm)
Handle. . . . . 5 x 1 1/2 x 1/4 in. (12.7 x 3.8 x 0.6 cm)
Weight (not with power cord):
with 1/4-28 socket assembly (min.). . . . . 8 lb (3.6 kg)
with 1/2-20 socket assembly (max.). . . . . 10 lb (4.5 kg)
Voltage (dc). 12V

I. SUPPORT EQUIPMENT:

Power Source: An external 12V direct current power supply with a 50A current capacity is required.

Accessories: Five size socket assemblies are available: 1/4 in. (0.635 cm), 5/16 in. (0.79 cm), 3/8 in. (0.95 cm), 7/16 in. (1.11 cm), and 1/2 in. (1.27 cm).

J. FOR MORE INFORMATION REFER TO:

Bibliography: 9, 22

Tool Reference: Aero Jet space bolt removal tool.

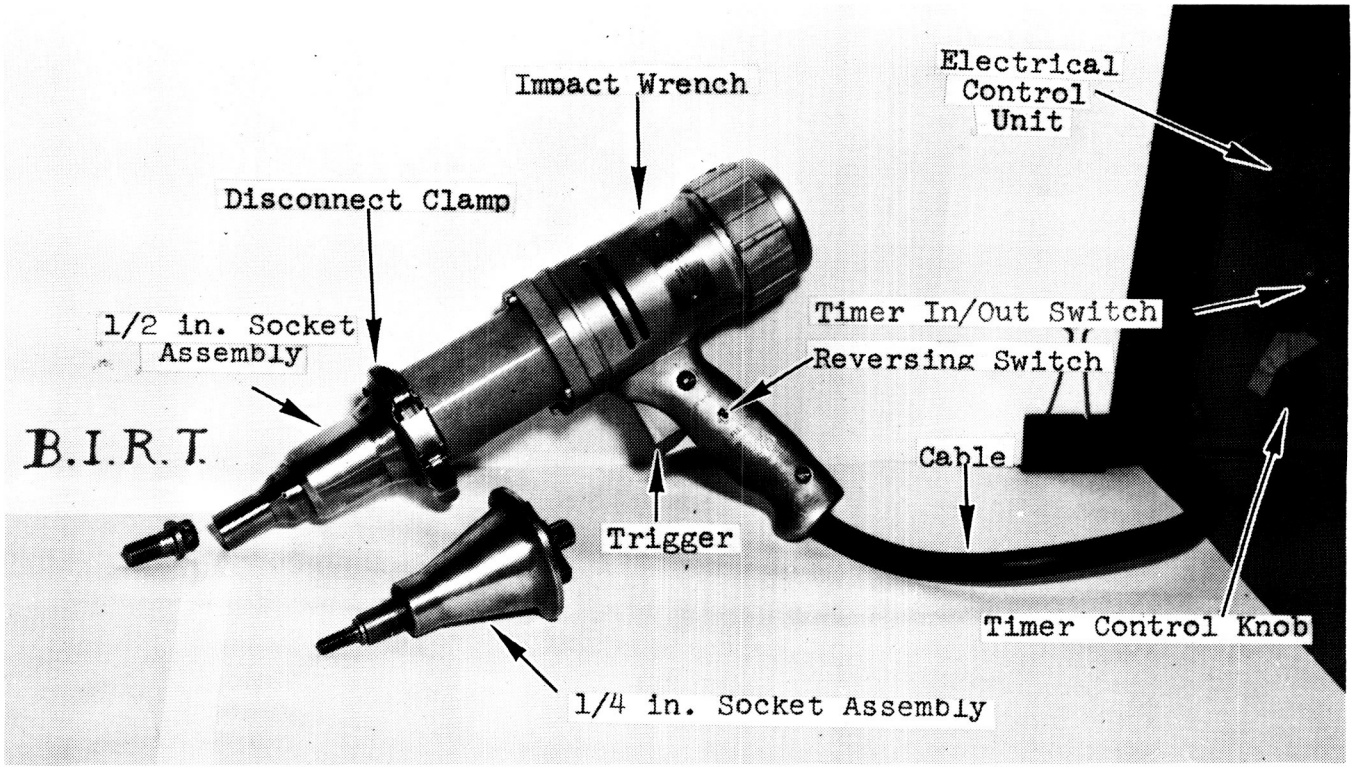

Figure 10-7. Bolt Installation and Removal Tool.
Photograph provided by the Marshall Space Flight Center.

INERTIA WHEEL

A. PURPOSE: The inertia wheel was designed to reduce the amount of rotational motion required for nut running operations.

B. PREVIOUS SOLUTIONS: There have been no previous space validated systems.

C. CURRENT METHOD OF OPERATION: The inertia wheel is an ingenious ratchet wrench. A ratchet mechanism with a reversing switch and a drive shaft is attached to the front of a D-shaped handle. The drive shaft has a 3/8 in. (0.95 cm) square drive at the far end and an inertial mass mechanism at the other end near the ratchet mechanism. The inertial mass mechanism consists of a metal disk mounted coaxially on the drive shaft, two metal bars extending radially from the disk and a metal ball at the end of each bar.

To tighten or loosen a nut, an astronaut places an appropriate socket on the square drive, grips the D-handle with one hand, sets the reversing switch to forward or reverse, engages the socket on the nut and spins the inertial mass mechanism with his free hand. In this way, the amount of motion required of an astronaut using a manual tool for nut running can be reduced to a minimum. As the fastener begins to tighten, the astronaut can apply a steady force on one of the balls to exert more torque on the nut.

D. RELATED FUNCTIONAL CATEGORIES: None.

E. PERFORMANCE: This tool was compared to a Commercial ratchet, a speed handle, the spiral drive screwdriver and the T-handle multi-functional tool in a laboratory test. It was found that the inertia wheel consumed less time, applied more torque and required less operator energy than any of the others. It was more capable than the T-handle tool but not as capable as the Commercial ratchet in working in confined areas.

F. ADVANTAGES AND DISADVANTAGES: Unavailable.

G. STATUS:

	Projected Date	Actual Date	Posted Date
Prototype Model	1967	1967	1969

Developer:
National Aeronautics and Space Administration
Marshall Space Flight Center
Huntsville, Alabama 35812

Sponsor:
National Aeronautics and Space Administration
Marshall Space Flight Center
Huntsville, Alabama 35812

H. SPECIFICATIONS:

Length	13 in. (33.0 cm)
Width (maximum)	9.5 in. (24.3 cm)
Weight (without socket)	5 lb (2.3 kg)

I. SUPPORT EQUIPMENT:

Power Source: This is a manually operated tool.

Accessories: A number of different size sockets can be used with this tool.

J. FOR MORE INFORMATION REFER TO:

Bibliography: 69

Tool Reference: None.

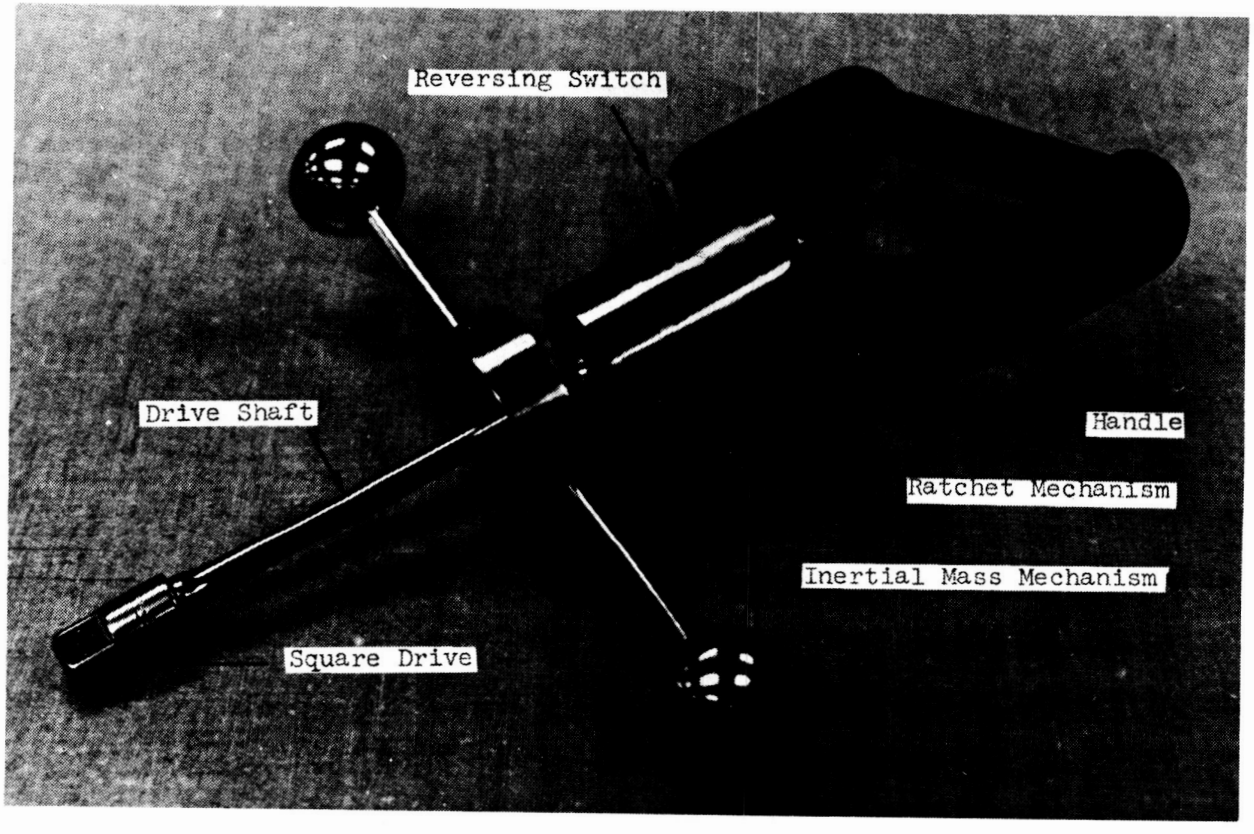

Figure 10-8. Inertia Wheel. Photograph provided by the Marshall Space Flight Center.

MOTOR/HANDLE ASSEMBLY

A. PURPOSE: The motor/handle assembly was designed as a general drive unit for the power saw, power drill and power impact wrench.

B. PREVIOUS SOLUTIONS: There have been no previous space validated systems.

C. CURRENT METHOD OF OPERATION: The motor/handle assembly is part of the Martin space tool kit and has its own pocket in the tool kit case. It consists of two major parts: (1) the handle assembly and (2) the motor assembly.

The handle assembly consists of the handle and the handle casing. The handle contains the power trigger, the recessed reversing switch and the power lock-on button which is used to hold the power trigger in the on position. The handle is located under the center of mass of the combined motor/handle assembly and power impact wrench attachment, and has a T-shaped cross section so that the palm structure of a pressurized glove will not interfere with the astronaut's grip. The handle casing supports the motor assembly on two ball bearings to isolate torques developed in the motor from the handle for zero reaction operation.

The motor assembly consists of the electric motor, a gear reduction, the motor/handle clutch face, the motor housing and a quick disconnect device. The motor has a permanent magnet field. Silver graphite brushes are used to provide efficient high altitude operation. Power connection is made through a pair of slip rings at the back of the motor unit. The motor armature speed is reduced by a 7.1 planetary gear to 1.8 krpm at the clutch face. The clutch face is a tooth type which mates a similar one in the attachment when it is connected to the motor handle. The motor is mounted in the motor housing which also holds the quick disconnect device. This device is a ball detent mechanism which utilizes two diametrically opposed balls in the motor housing which fit into a groove in the attachment housing. The ball is held in the groove by the locking sleeve which has a cam surface on its forward edge to assure seating of the ball. The locking spring keeps the detent engaged unless the sleeve is held in the rear position by the operator. Steel dog teeth mounted in the motor housing and the attachment housing prevent the two from rotating with respect to each other during operation.

D. RELATED FUNCTIONAL CATEGORIES: 2

E. PERFORMANCE: The motor/handle assembly was started, allowed to reach speed and stopped several times in a Bell jar containing a pure oxygen atmosphere to examine the possibility of explosion or contamination in a cabin atmosphere. It was concluded that the explosion hazard is minimal (there were none) and contaminates were at a level such that they were not conclusively a threat. Qualitative handling tests were performed by a pressure

suited operator in a five-degree-of-freedom simulator. The power impact wrench was difficult either to attach or remove. The operator could neither attach the drill and saw nor plug the power cord into the socket in the tool kit case. In addition, the handle was too large for a firm grip. Grasping the handle with the left hand caused the lock-on button to engage. The reversing switch required a two handed operation.

F. ADVANTAGES AND DISADVANTAGES: The use of a single motor/handle assembly with several tool attachments saves weight and space when compared to the use of a collection of several tools that perform the same functions but have their own individual motors and handles.

G. STATUS:

	Projected Date	Actual Date	Posted Date
Prototype Model	1965	1965	1969

Developers:
Allen E. Holmes and A. L. Hamilton
Martin Company, Baltimore Division
Baltimore, Maryland 21203

Sponsor:
National Aeronautics and Space Administration
Manned Spacecraft Center
Houston, Texas 77058
Contract No. NAS 9-3161

H. SPECIFICATIONS:

Length	7.0 in. (17.8 cm)
Width	3.0 in. (7.6 cm)
Height	8.0 in. (20.3 cm)
Weight	5-5/8 lb (2.55 kg)
Motor voltage	12V

I. SUPPORT EQUIPMENT:

Power Source: There is a battery in the Martin space tool kit case.

Accessories: The power drill, power saw, and the power impact wrench are all attachments for the tool. The tool is stored in the Martin space tool kit case.

J. FOR MORE INFORMATION REFER TO:

Bibliography: 17, 40, 41, 42, 71

Tool Reference: Martin space tool kit, Martin space tool kit case, power saw, power drill, and power impact wrench.

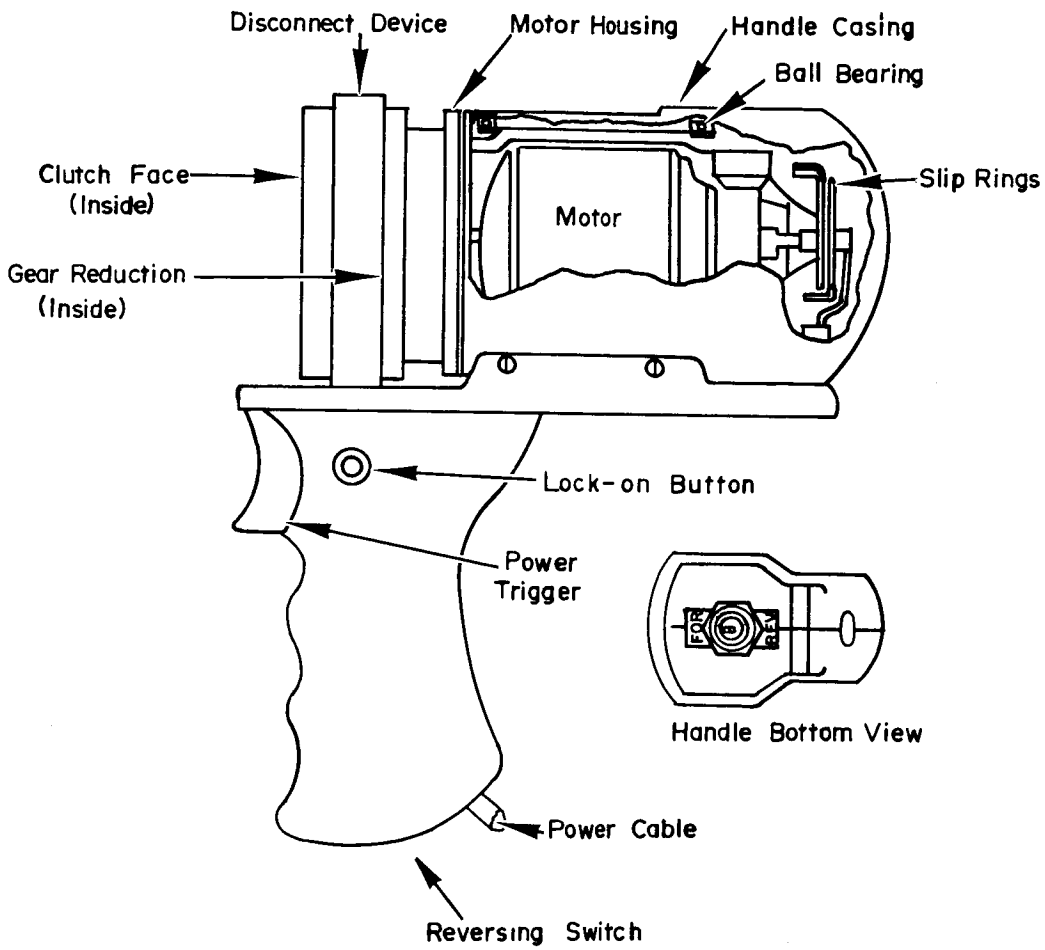

Figure 10-9. Motor/Handle Assembly. Drawing taken from Bibliography reference No. 41.

NUT AND BOLT WRENCH (NAB)

A. PURPOSE: The nut and bolt wrench (NAB) was designed as a ratcheting, zero-reaction socket wrench for space operations.

B. PREVIOUS SOLUTIONS: There have been no previous space validated systems.

C. CURRENT METHOD OF OPERATION: Spring loaded pins in the socket hold nut and bolt heads securely after the tool is applied. The socket is mounted on a sliding central shaft which moves up or down as the nut screws in or out, thus allowing the two handles to remain at the same height at all times. A friction clutch provides enough drag so that the tool will ratchet when the nut or bolt is free. The force path is closed by anchoring the tool through a force bar which is placed against some nearby projection. The force path can also be closed by inserting a spring-loaded pin in the face of the tool into a hole drilled alongside the nut or bolt.

D. RELATED FUNCTIONAL CATEGORIES: None.

E. PERFORMANCE: No record of accomplishment.

F. ADVANTAGES AND DISADVANTAGES: The tool requires the use of both the operator's hands and a nearby protrusion is needed to cancel reaction torques.

G. STATUS:

	Projected Date	Actual Date	Posted Date
Prototype Model	1962	1962	1969

Developer:
American Machine and Foundry Company
Government Products Group
261 Madison Avenue
New York, New York

Sponsor:
American Machine and Foundry Company
Government Products Group
261 Madison Avenue
New York, New York

H. SPECIFICATIONS: Unavailable.

I. SUPPORT EQUIPMENT:

Power Source: This is a manually operated tool.

Accessories: None.

J. FOR MORE INFORMATION REFER TO:

Bibliography: 19, 63

Tool Reference: Boeing torque cancelling tool, Martin zero reaction space wrench and plench.

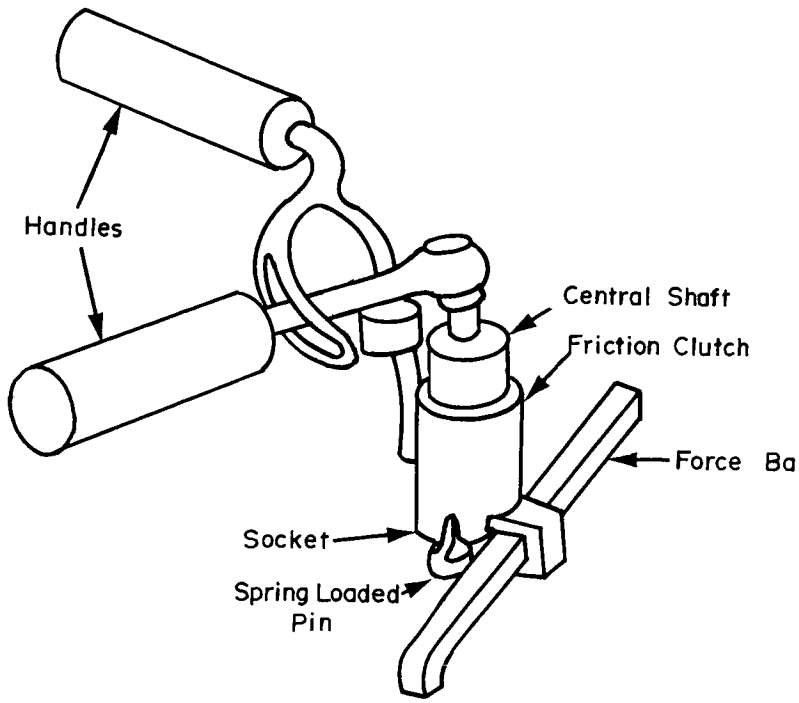

Figure 10-10a. Nut and Bolt Wrench. Drawing taken from Bibliography reference No. 63.

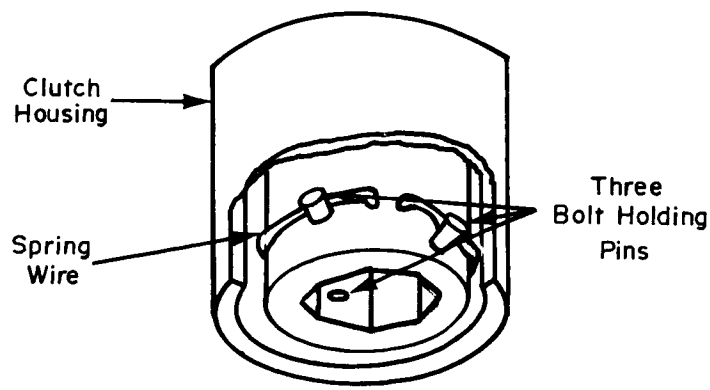

Figure 10-10b. Internal Socket Mechanism. Drawing taken from Bibliography reference No. 19.

OPEN END FLAT RATCHET WRENCH

A. PURPOSE: The open end flat ratchet wrench was designed to serve as a hand operated ratchet wrench which is small enough to operate in confined areas during EVA and IVA tasks.

B. PREVIOUS SOLUTIONS: There have been no previous space validated hand operated ratchet wrenches.

C. CURRENT METHOD OF OPERATION: The open end flat ratchet wrench has three main parts: (1) the grip assembly, (2) the shank and (3) the drive head. The grip assembly is basically a lever attached to the top of a handle. The handle and lever are held in an astronaut's palm and squeezed together. Squeezing the grip pulls a cable that runs down the length of the hollow shank and operates a ratchet mechanism in the drive head. A spring in the drive head pulls the ratchet mechanism, the cable and the lever back into position when the astronaut releases the grip. A knob at the top of the grip assembly permits the pivot point of the lever to be moved to one of two points on the handle to change operating leverages and allow two speed operation.

The shank is a slightly S-shaped tube. The grip assembly is attached to one end and the drive head is attached to the other end by means of rotational joints that can rotate these units full circle about the axis of the ends of the shank. These joints have detent mechanisms that automatically engage every 15° (0.26 rad) of rotation so that the drive head has many different possible orientations with respect to the grip assembly. This feature was intended to increase the wrench's versatility for use in confined areas.

The drive head houses a ratchet mechanism which drives an open end bolt drive unit. This bolt drive unit fits into a slot in the drive head housing and can be easily removed to be replaced by a bolt drive unit designed to handle a different bolt size.

To remove a nut or bolt, the astronaut first orients the grip assembly and drive head assembly with respect to the shank in a way the wrench will reach around any obstructions. The entire tool housing can then be used in the conventional wrench manner to apply break-away torque. Nut or bolt running can then be accomplished by use of the wrench in the grip squeezing mode. If the nut or bolt is to be rethreaded, reverse operation of the wrench is accomplished by rotating the drive head a half circle with respect to the shank.

D. RELATED FUNCTIONAL CATEGORIES: None.

E. PERFORMANCE: A complete stress analysis indicated that the wrench could withstand approximately 660 in.-lb (75 m-N) torque when used in the conventional manner and would produce approximately 75 in.-lb (8.5 m-N) when used in the hand operated manner. The wrench will fit bolts from 1/2 in. (1.27 cm) diameter and smaller by using separate changeable inserts.

F. ADVANTAGES AND DISADVANTAGES: Unavailable.

G. STATUS:

	Projected Date	Actual Date	Posted Date
Prototype Model	1968	1968	1969

Developer:
J. C. Salyers
Union Carbide Corporation
Nuclear Division
Oak Ridge Gaseous Diffusion Plant
Oak Ridge, Tennessee

Sponsor:
National Aeronautics and Space Administration
Marshall Space Flight Center
Huntsville, Alabama 35812

H. SPECIFICATIONS:

	Length	Diameter	Width	Thickness	Material
Palm Grip	6 in. (15.2 cm)		0.688 in. (1.75 cm)	0.875 in. (2.22 cm)	Steel
Shank	8 in. (20.3 cm)	4 in. (10.2 cm)			Steel
Head	5 in. (12.7 cm)		2.75 in. (6.99 cm)	0.625 in. (1.59 cm)	Steel
Finger Grip	6 in. (15.2 cm)	0.438 in. (1.11 cm)			Steel

Total Weight. . . . . 3 lb (1.4 kg)

I. SUPPORT EQUIPMENT:

Power Source: This is a manually operated tool.

Accessories: Various size bolt drive units.

J. FOR MORE INFORMATION REFER TO:

Bibliography: 21

Tool Reference: None.

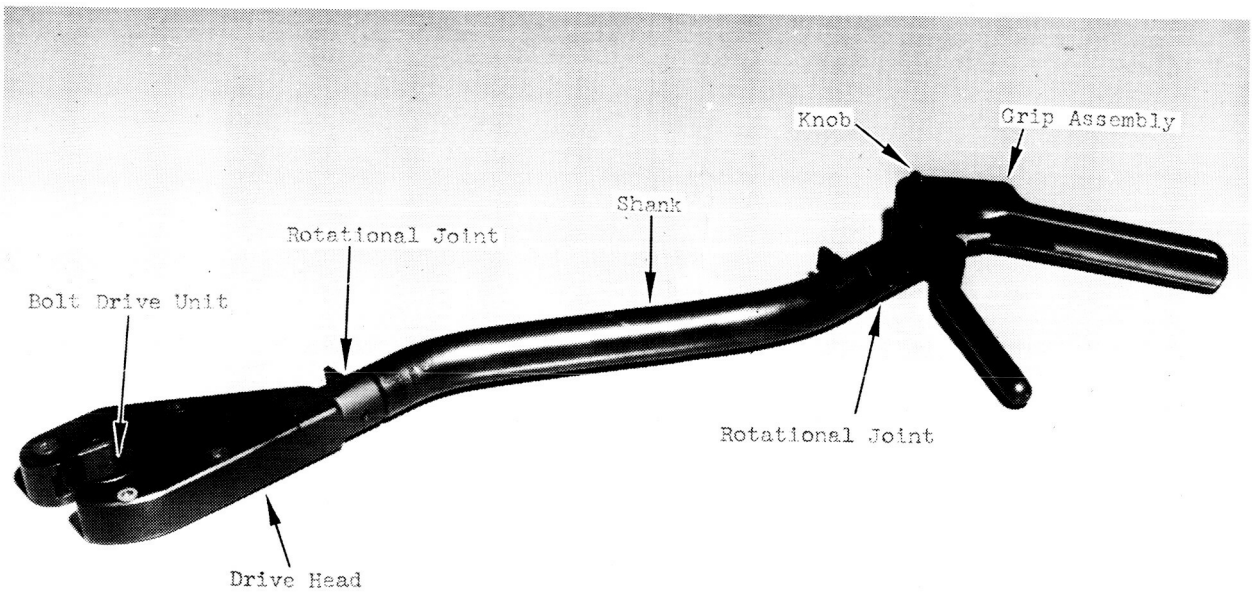

Figure 10-11. Open End Flat Ratchet Wrench. Photograph provided by the Oak Ridge Gaseous Diffution Plant.

PLIERS-WRENCH (PLENCH)

A. PURPOSE: The pliers-wrench (PLENCH) was designed as a ratcheting zero reaction, socket wrench for space use.

B. PREVIOUS SOLUTIONS: There have been no previous space validated systems.

C. CURRENT METHOD OF OPERATION: Repeated squeezing of the pliers-like grips causes the device to ratchet, as in a ratchet wrench. Thus the fastener can advance or withdraw without the operator having to exert a torque motion or any push force. An adjustable reaction pin can abut against some protrusion from the ship or engage in a hole in the ship's structure in order to transmit the external reaction torque associated with the tightening of a bolt to the ship rather than to the free floating astronaut.

D. RELATED FUNCTIONAL CATEGORIES: None.

E. PERFORMANCE: Qualitative assessments of the tool's utility were tested on an air bearing platform. The tool performed satisfactorily.

F. ADVANTAGES AND DISADVANTAGES: The plench is powered and operated with one hand. However, it requires a protrusion or hole in the ship's structure near the working area for the reaction pin to counteract the reactive forces.

G. STATUS:

	Projected Date	Actual Date	Posted Date
Prototype Model	1960	1960	1969

Developer:
LTV Aerospace
Astronautics Division
Dallas, Texas

Sponsor:
LTV Aerospace
Astronautics Division
Dallas, Texas

H. SPECIFICATIONS: Unavailable.

I. SUPPORT EQUIPMENT:

Power Source: This is a manually operated tool.

Accessories: Several different size sockets can be used with the tool.

J. FOR MORE INFORMATION REFER TO:

Bibliography: 19, 20, 37

Tool Reference: Boeing torque cancelling tool, zero reaction space wrench and nut and bolt wrench.

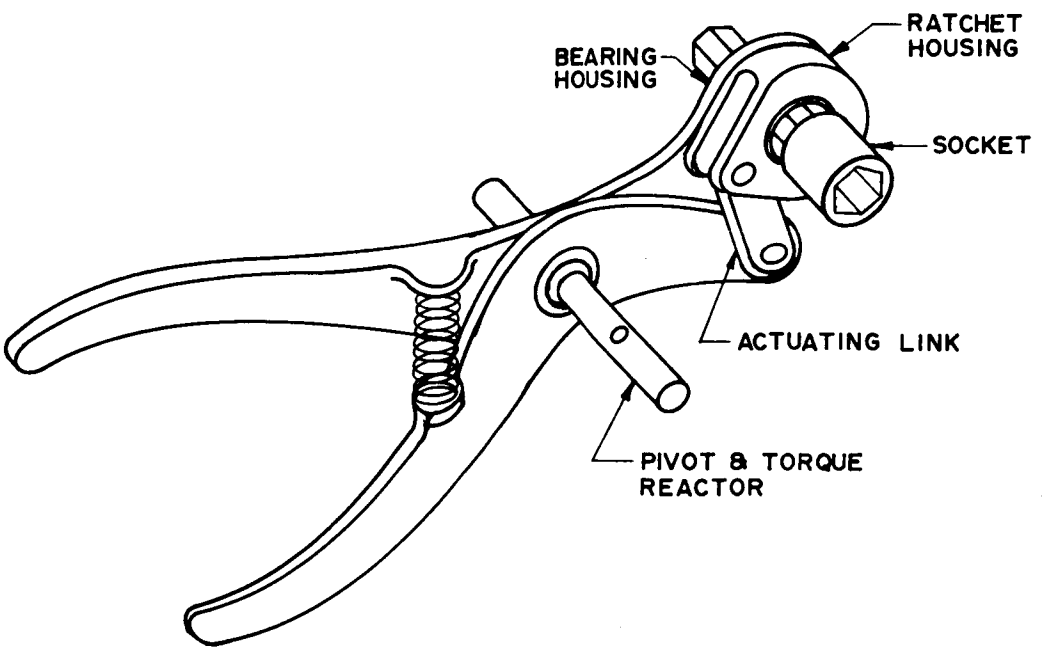

Figure 10-12. Pliers-Wrench. Drawing taken from Bibliography reference No. 19.

POWER IMPACT WRENCH

A. PURPOSE: The power impact wrench was designed to tighten or loosen nuts or bolts with a minimum of reaction transmitted to the operator.

B. PREVIOUS SOLUTIONS: There have been no previous space validated solutions.

C. CURRENT METHOD OF OPERATION: The power impact wrench is part of the Martin space tool kit and is used as an attachment for the motor/handle assembly which provides an electric motor and a handle for the wrench. When the wrench is attached to the motor/handle assembly, the wrench and the motor assembly form a single unit which is mounted in the handle assembly in a manner such that it can rotate freely about its axis. Slip rings carry current to the motor and all control switches are located on the handle.

In operation, the motor drives an impactor mechanism through a 7.1/1 gear reduction and the clutch interface of the motor/handle and the wrench attachment. Receiving energy from the motor, the impactor acts as an energy storage device by virtue of a spring within the mechanism. As the spring is tightened, the impact mass does not rotate since its hammer dogs engage the anvil dogs on the spindle. The spindle is prevented from rotating with respect to the barrel by the controlled internal restraint collar (CIR) which is a friction clutch. However, a cocking cam gradually slides the impact mass back until the dogs disengage. The spring rotates the impact mass, the cam slides it forward, and the hammer dogs strike the anvil dogs with a high torque blow which overcomes the restraint of the CIR, thus turning the spindle, socket and fastener. These impact cycles will continue as long as the tool is operated.

The reaction torque on the impact mass is delayed and spread out over time by the recoil of the impactor spring so that a lengthy, low-torque reaction is transmitted back to the motor. This reaction is transmitted through the motor housing to the wrench housing. Since the torque is of such a low value that it can not overcome the static friction of the CIR on the spindle or of the threaded fastener in the workpiece, the torque is transmitted through the spindle and is absorbed by the fastener. In this way, no reaction is transmitted to the operator except that due to bearing drag.

D. RELATED FUNCTIONAL CATEGORIES: None.

E. PERFORMANCE: Qualitative tests on a five-degree-of-freedom simulator by a suited operator have shown that the tool was fast enough in the actual wrenching operation, but much time was lost in the changing of sockets, starting of threads, and the aligning of the socket onto the bolt head. These operations were very fatiguing. An improved socket attachment mechanism that would provide a small but constant holding force is needed to facilitate socket changes and to retain the socket on the shank.

The wrench was tested for torque output on a series of bolts tightened into a steel plate. The table below shows the torque values averaged over 10 bolts of the sizes listed.

Fastener Size	Torque Output	Time	Handle Reaction
1/2 in. (1.27 cm)	85.0 ft-lb (9.61 m-N)	3 sec	5.6 in.-oz (0.04 m-N)
3/8 in. (0.95 cm)	49.0 ft-lb (5.54 m-N)	3 sec	5.6 in.-oz (0.04 m-N)
5/16 in. (0.79 cm)	34.2 ft-lb (3.87 m-N)	3 sec	5.6 in.-oz (0.04 m-N)

F. ADVANTAGES AND DISADVANTAGES: Unavailable.

G. STATUS:

	Projected Date	Actual Date	Posted Date
Prototype Model	1965	1965	1969

Developers:
Allen E. Holmes and A. L. Hamilton
Martin Company, Baltimore Division
Baltimore, Maryland 21203

Sponsor:
National Aeronautics and Space Administration
Manned Spacecraft Center
Houston, Texas 77058
Contract No. NAS 9-3161

H. SPECIFICATIONS:

Length . . . . . 6.4 in. (16.3 cm)
Diameter . . . . . 2 1/4 in. (5.72 cm)
Weight . . . . . 2 5/8 lb (1.2 kg)

I. SUPPORT EQUIPMENT:

Power Source: The motor/handle assembly provides the mechanical power to drive the power impact wrench.

Accessories: Five 1/2 in. (1.27 cm) drive sockets, 7/16 - 3/4 in. (1.11 - 1.91 cm), are included in the Martin space tool kit for use with the wrench. The tool is stored in the tool kit case.

J. FOR MORE INFORMATION REFER TO:

Bibliography: 17, 40, 41, 42, 71

Tool Reference: Martin space tool kit, Martin space tool kit case, motor/handle assembly.

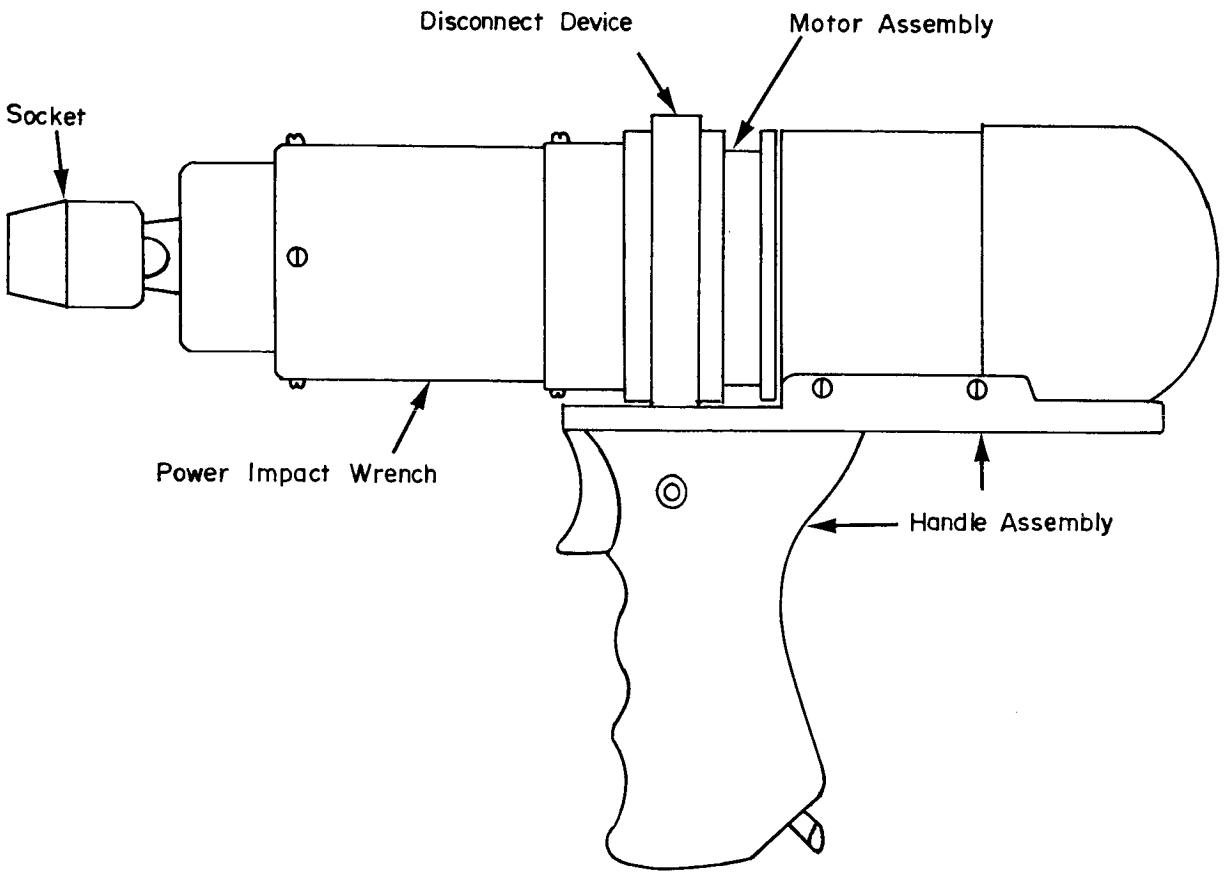

Figure 10-13. Power Impact Wrench. Drawing taken from Bibliography reference No. 41.

RATCHET HAND TOOL

A. PURPOSE: The ratchet hand tool was designed as a ratchet wrench with an inset spline socket for efficient transmission of torque to the fastener.

B. PREVIOUS SOLUTIONS: There have been no previous space validated systems.

C. CURRENT METHOD OF OPERATION: The main feature of the ratchet hand tool is the inset spline socket. The fact that the socket is inset so that its center is on the handle axis eliminates the forces which would tend to lift the socket off the fastener. The spline drive transmits torque to a spline drive head fastener more efficiently than a standard hex or 12-point socket would transmit torque. The ratchet mechanism is reversible only in the sense that the wrench can be turned over on the other side of the socket for reverse operations. A velcro band covers the handle.

D. RELATED FUNCTIONAL CATEGORIES: None.

E. PERFORMANCE: The ratchet hand tool successfully passed a series of tests designed to indicate the tools ability to overcome acceleration, vibration, high-low temperature, humidity and solar heating conditions for space qualification. The tool was taken on the Gemini 8 and 11 flights for comparison with the space power tool system in tightening and loosening bolts and nuts in the D-16 experiment. The experiment was cancelled on both flights.

F. ADVANTAGES AND DISADVANTAGES: The ratchet hand tool has enlarged handles that permit the astronaut to grip the tool easily with his pressurized glove. The inset spline socket that increases the efficiency of torque transmission to the fastener is also an advantage.

G. STATUS:

	Projected Date	Actual Date	Posted Date
Prototype Model	1966	1966	1969

Developers:
J. D. Wilger and L. A. Vorst
Technology Incorporated
Dayton, Ohio

Sponsor:
United States Air Force
Air Force Aero Propulsion Laboratory
Air Force Systems Command
Wright-Patterson Air Force Base, Ohio
Contract No. AF 33(615)-1125

H. SPECIFICATIONS:

Weight. . . . . 0.2 lb (0.091 kg)

I. SUPPORT EQUIPMENT:

Power Source: This is a manually operated tool.

Accessories: The tool was stored in the restraint assembly of the space power tool system during the Gemini 8 and 11 flights.

J. FOR MORE INFORMATION REFER TO:

Bibliography: 30, 53

Tool Reference: Space power tool system.

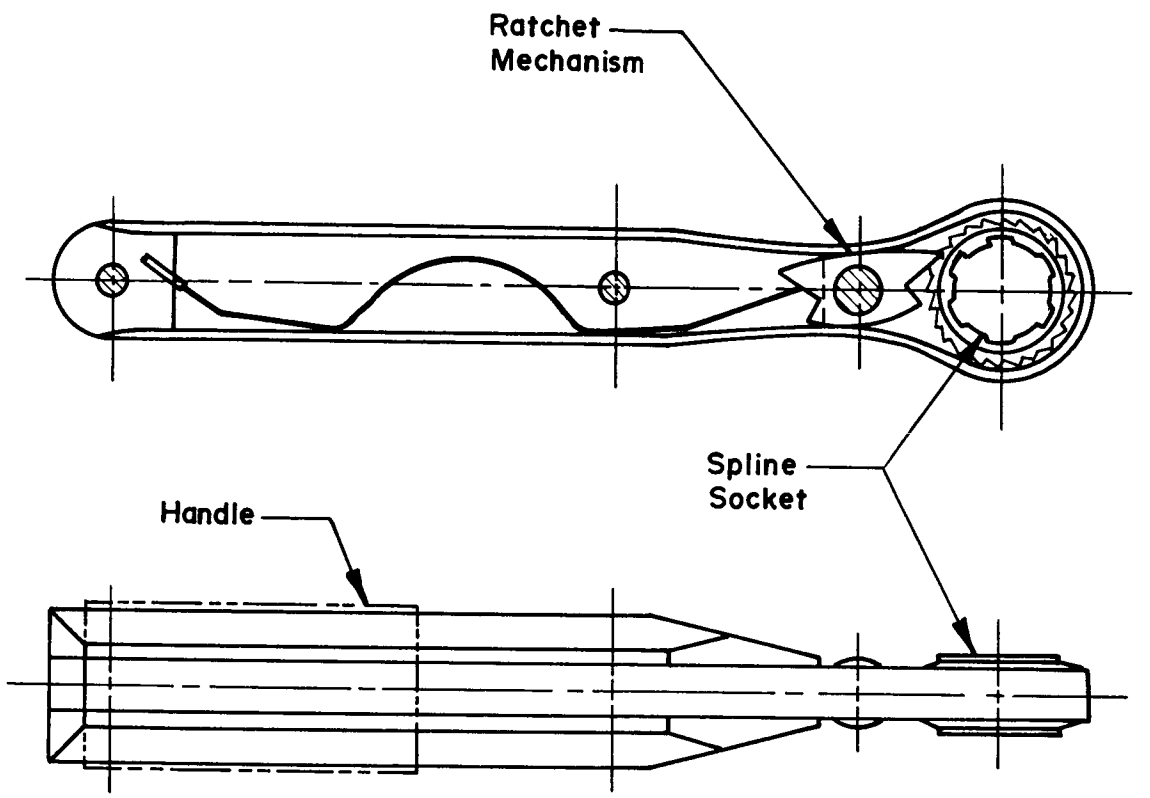

Figure 10-14. Ratchet Hand Tool. Drawing provided by the Marshall Space Flight Center.

SCREWDRIVER RATCHET HANDLE

A. PURPOSE: The screwdriver ratchet handle was designed as a ratcheting handle mechanism for Phillips and flat blade screwdriver bits and as a handle for the applicator of the restraint buttons and applicator system.

B. PREVIOUS SOLUTIONS: There have been no previous space validated systems.

C. CURRENT METHOD OF OPERATION: The screwdriver ratchet handle is part of the Martin space tool kit and is stored in the tool kit case. It consists of a standard 1/4 in. (0.635 cm) drive ratchet mechanism installed in a pistol grip handle which is useable with any 1/4 in. (0.635 cm) drive screwdriver bit. A Phillips bit, a flat blade bit and two extension bars are stored in the tool kit case. The handle also serves as a handle for the applicator of the restraint buttons and applicator system.

D. RELATED FUNCTIONAL CATEGORIES: 1

E. PERFORMANCE: The screwdriver ratchet handle and its attachments were tested on a five degrees of freedom simulator. The ratchet handle and the drive extension were removed from the case with no problems. When replacing the ratchet handle, several trials were required to get the handle to latch in the bracket. The slot screwdriver attachment was too tight to be removed by the test subject when he was on the simulator. It was removed by the test subject with great difficulty when the simulator was locked. Excessive friction in removing the extensions and attachments from the ratchet handle was a hindrance.

The slot head screwdriver was extremely difficult to use. After 3 minutes of effort, the test subject was able to remove a slot-head screw only 0.125 in. (0.318 cm). The difficulty was in keeping the screwdriver aligned with the slot. The same test was conducted using a standard Allen drive socket on the ratchet handle with much greater success. The wobble in the ratchet driver and accidental flipping of the ratchet reversing switch were the prime design trouble areas.

Similar tests were conducted using the identical attachments on a standard Snap-On ratchet handle. The removal of a No. 8 Allen Head screw, which required 2 minutes 15 seconds using the screwdriver ratchet handle, took only 1 minute 10 seconds with the Snap-On ratchet handle. There were no problems with the reversing switch or the capability to spin the ratchet handle. These two qualities contributed to the reduced operation time of the Snap-On ratchet handle.

F. ADVANTAGES AND DISADVANTAGES: Unavailable.

Status:	Projected Date	Actual Date	Posted Date
Prototype Model	1965	1965	1969

Developers:
Allen E. Homes and A. L. Hamilton
Martin Company, Baltimore Division
Baltimore, Maryland 21203

Sponsor:
National Aeronautics and Space Administration
Manned Spacecraft Center
Houston, Texas 77058
Contract No. NAS 9-3161

H. SPECIFICATIONS:

Length	4.6 in.	(11.7 cm)
Width	1.4 in.	(3.56 cm)
Height	.2.7 in.	(6.85 cm)
Weight	0.75 lb	(0.34 kg)

I. SUPPORT EQUIPMENT:

Power Source: This is a manually operated tool.

Accessories: This tool is stored in the Martin space tool kit case with a 1/4 in. (0.635 cm) drive #2 Phillips screwdriver bit, a 1/4 x 0.032 in. (0.635 x 0.0813 cm) flat blade bit, a 1/4 x 6 in. (6.635 x 15.2 cm) extension bar and a 1/2 x 5 in. (1.27 x 12.7 cm) extension.

J. FOR MORE INFORMATION REFER TO:

Bibliography: 17, 40, 41, 42, 71

Tool Reference: Martin space tool kit, Martin space tool kit case, Restraint Buttons and Applicator.

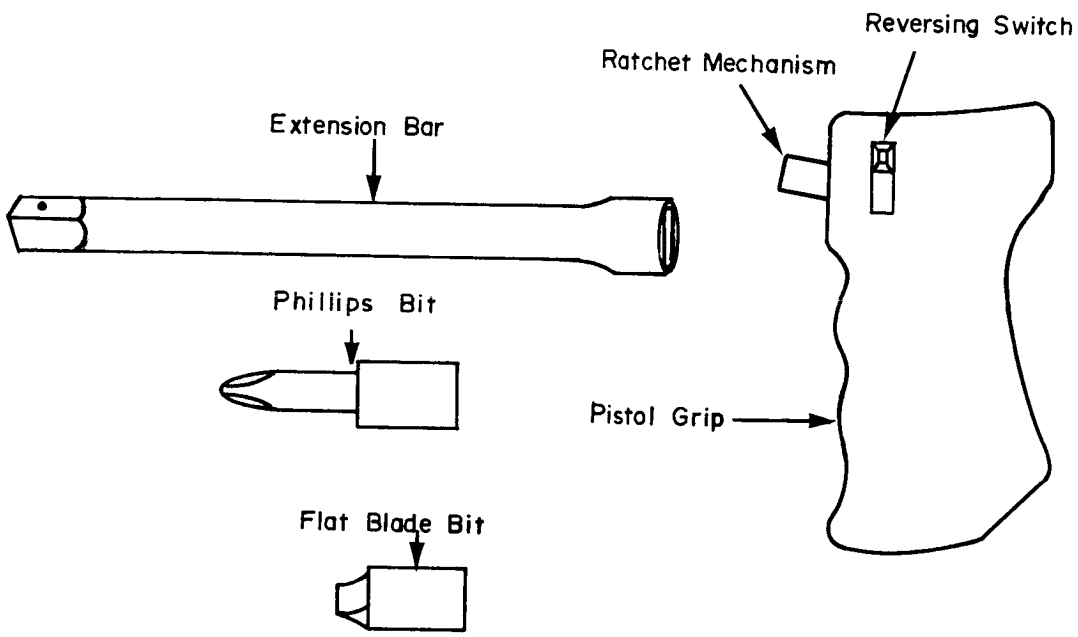

Figure 10-15. Screwdriver Ratchet Handle and Attachments. Drawing taken from Bibliography reference No. 41.

SPACE POWER TOOL SYSTEM

A. PURPOSE: The space power tool was designed to serve as a self-contained power impact wrench that would apply high torque on a threaded fastener and transmit a minimum of reaction to the operator and to serve as a self-contained power hand drill/tap.

B. PREVIOUS SOLUTIONS: There have been no previous space validated systems.

C. CURRENT METHOD OF OPERATION: The space power tool has three major parts: (1) the handle, (2) the tool housing, and (3) the barrel assembly. The handle can be folded for tool storage and contains an on-off positive action trigger and a detented slide action reversing switch. Worksite illumination lights and their control switch are located at the bottom of the handle. The tool housing, which has removable batteries located in each of the two side lobes, suspends the barrel assembly on two ring bearings so that it may rotate freely.

The electric motor in the barrel assembly drives a Black and Decker patented impactor assembly through a 7.5:1 gear reduction. As the driveshaft turns, the impactor barrel remains stationary as a spring between them is compressed. The impactor barrel is held stationary by hammer lugs at the front end of the impactor barrel that engage anvil dogs on the output shaft. Thus the shaft is prevented from rotating with respect to the barrel assembly casing by a controlled internal restraint collar (CIR) anchored to the barrel casing through a sliding sleeve. As the impactor driveshaft turns, an internal cam slides the impactor barrel back on the shaft until the lugs disengage. The spring rotates the impactor barrel, the cam slides it forward again and the hammer lugs strike the anvil dogs with a high torque blow which overcomes the restraint of the CIR. Then the output shaft, spline socket and fastener are turned. These impact cycles will continue as long as the tool is operated.

The reaction torque on the impactor barrel is delayed and spread out over time by the recoil of the spring so that a lengthy, low-torque reaction is transmitted back to the motor. This reaction is transmitted to the barrel assembly casing, the CIR, the output shaft and finally to the fastener where it is absorbed because it is not great enough to overcome the friction between the fastener and the workpiece. Thus, no reaction is transmitted to the operator except that due to bearing drag.

To operate the tool with a drill or tap bit, the sliding sleeve is moved rearward to disengage the barrel assembly casing from the CIR and lock it to the tool housing. The CIR is now free to rotate with the output shaft and impacting does not occur unless the bit encounters jamming. Then the tool will automatically impact until the obstruction is cleared.

D. RELATED FUNCTIONAL CATEGORIES: 4

E. PERFORMANCE: The space power tool passed a series of tests simulating mission conditions of humidity, condensation, random

vibration, acoustic noise, linear acceleration, solar heating, low and high temperature, thermal cycling, vacuum, and electrical interference. The tool was taken on the Gemini 8 and 11 flights for comparison with the ratchet hand tool in tightening and loosening bolts and nuts in the D-16 experiment. The experiment was cancelled on both flights. Output torque exceeds 45 ft-lb (5.9 m-N) on 1/2 in. (1.27 cm) NF AN-type bolts.

F. ADVANTAGES AND DISADVANTAGES: Unavailable.

G. STATUS:

	Projected Date	Actual Date	Posted Date
Prototype Model	1965	1965	1969
Breadboard Models #1A-#3A	1963	1963	1969

Developers:
M. B. Goldman and F. K. Daisey
Martin Company, Baltimore Division
Baltimore, Maryland 21203

Sponsor:
United States Air Force
Air Force Aero Propulsion Laboratory
Air Force Systems Command
Wright-Patterson Air Force Base, Ohio
Contract No. AF 33 (615)-2121

H. SPECIFICATIONS:

	Handle Extended	Handle Folded
Length	10 7/8 in. (27.6 cm)	10 13/16 in. (27.4 cm)
Height	9 1/16 in. (23.0 cm)	4 1/2 in. (10.4 cm)
Width		5 in. (12.7 cm)
Weight		7.62 lb (3.46 kg)

I. SUPPORT EQUIPMENT:

Power Source: Rechargeable nickel-cadmium batteries are located in the tool housing.

Accessories: The tool uses various spline sockets and drilling and tapping bits. The tool was stored with the ratchet hand tool in a drawer-like restraint assembly attached external to the capsule during the Gemini 8 and 11 flights.

J. FOR MORE INFORMATION REFER TO:

Bibliography: 16, 20, 30, 31, 32, 34, 35, 53, 54, 55

Tool Reference: Power impact wrench.

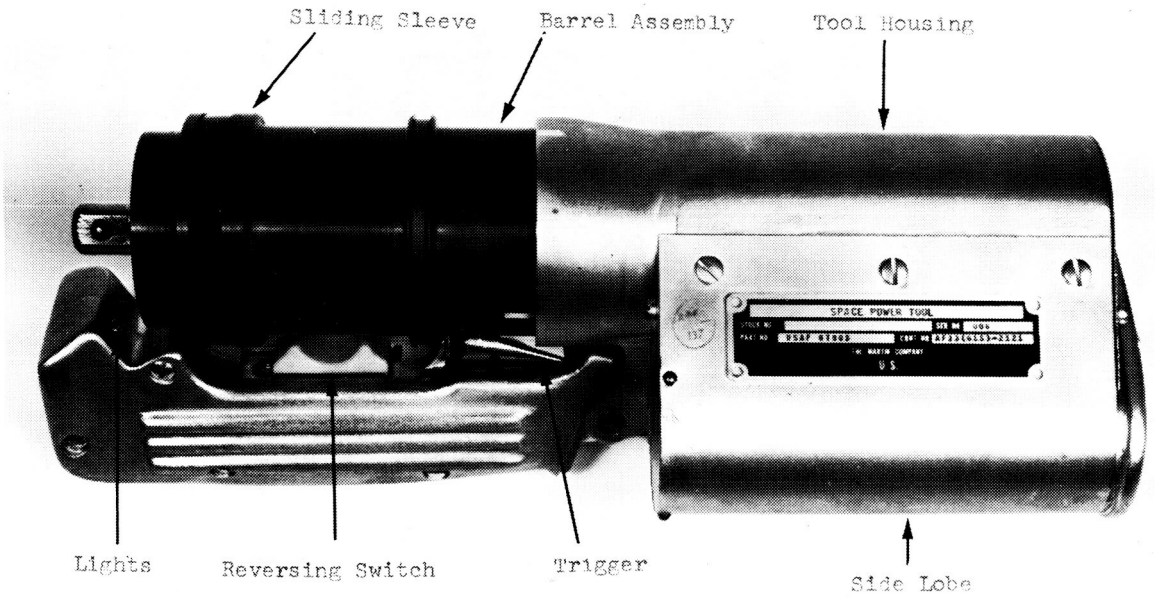

Figure 10-16a. Space Power Tool with Handle Folded. Photograph provided by the Martin Company.

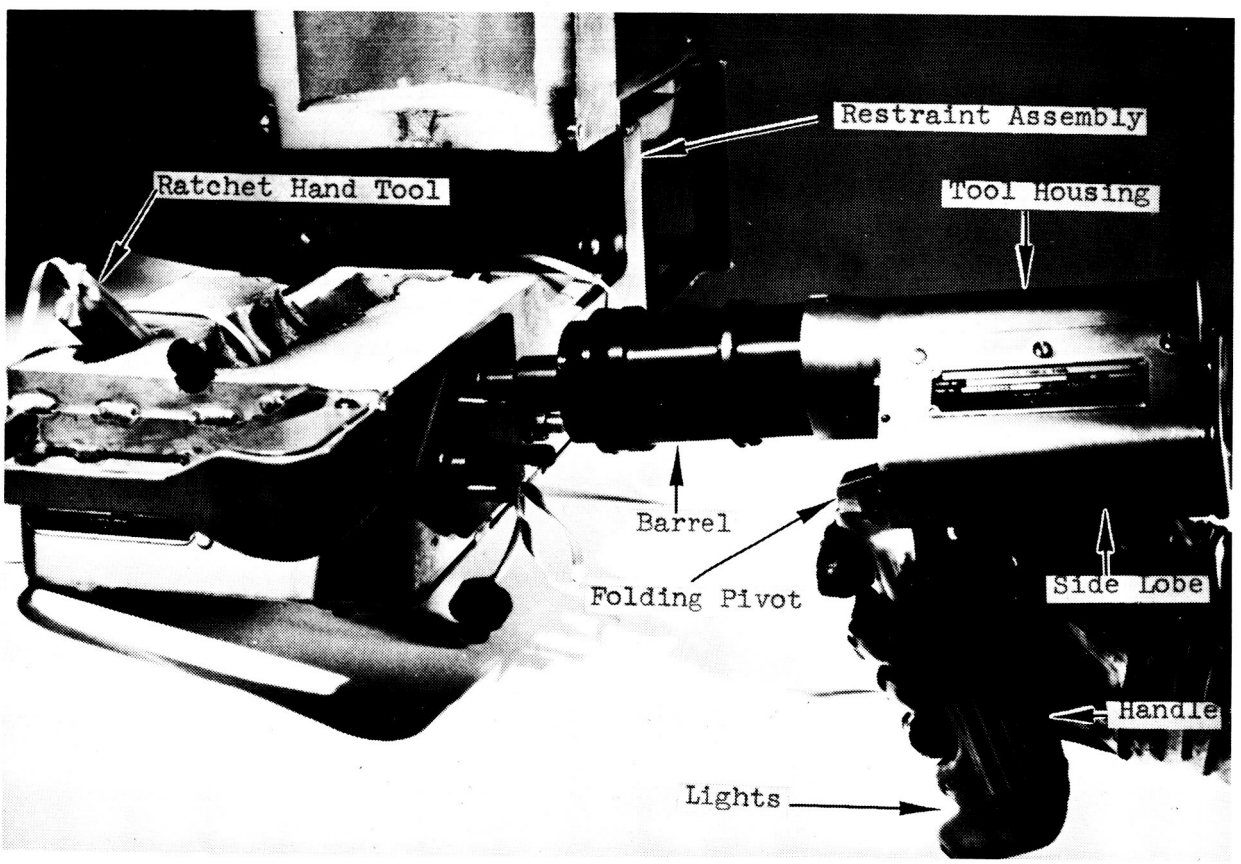

Figure 10-16b. Space Power Tool System. Photograph provided by the Air Force Aero Propulstion Laboratory.

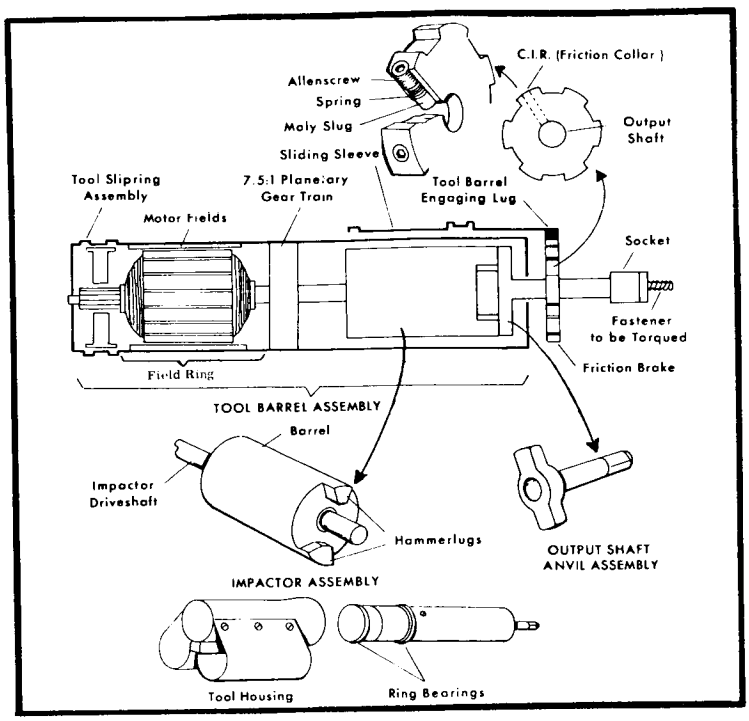

Figure 10-16c. Components of the Barrel Assembly. Drawing provided by the Martin Company.

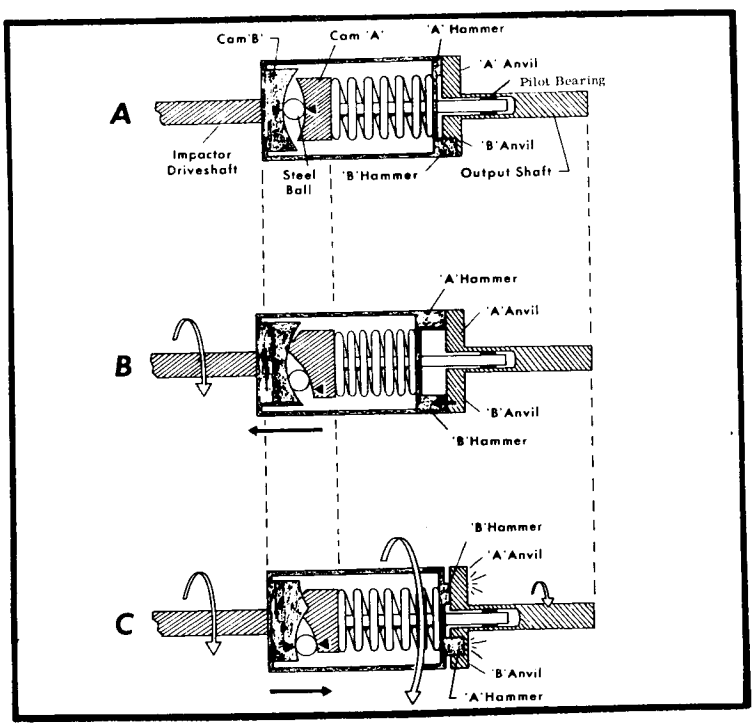

Figure 10-16d. Impactor Barrel Completing an Impacting Cycle. Drawing provided by the Martin Company.

SPACE TOOL MITTEN

A. PURPOSE: The space tool mitten was designed to give the operator space suit/glove protection while tightening or loosening threaded fasteners.

B. PREVIOUS SOLUTIONS: There have been no previous space validated systems.

C. CURRENT METHOD OF OPERATION: The space tool mitten has seven major parts: (1) the handle, (2) the protective envelope, (3) the tool housing, (4) the battery, (5) the electric motor, (6) the reduction gears, and (7) the impactor. The canted pistol grip handle has knurled sides and a T-shaped cross section to enable a good grip with a pressurized glove. The handle is located just above the center of mass of the tool for ease of positioning control. An on-off trigger switch, located at the front of the handle, requires less than 1.25 lb (5.61 N) for finger actuation, and a rocker, reversing switch, located at the top of the handle, is rocked back or forward respectively by the thumb for forward and reverse operation of the tool. There are two protective envelopes that can be used interchangeably with the tool. The larger is used for inflated pressure glove use of the tool and the smaller is used for bare handed use. The envelope protects the operator's arm from flying metal objects expelled from the worksite and offers protection to the operator's suit/glove while working in confined spaces. The tool housing incloses the rest of the tool. The battery is a removable, rechargeable, nickel cadmium battery and is located at the rear of the tool housing against the electric motor. The motor drives the impactor mechanism at the front of the tool housing through a 20:1 gear reduction. The impactor delivers high-torque, short duration blows to the output spindle but transmits back to the operator a low-torque, long duration reaction due to the recoil of the impactor spring. Several hex socket or screwdriver attachments can be placed on the output spindle of the impactor.

D. RELATED FUNCTIONAL CATEGORIES: None.

E. PERFORMANCE: The wrench can deliver 200 in.-lb (22.6 m-N) to a 1/2 in. (1.27 cm) fastener.

F. ADVANTAGES AND DISADVANTAGES: The tool is a self-contained power tool that has the center of mass located just below the handle. The tool provides suit/glove protection and allows rapid tool attachment exchange. The canted handle has a T-cross section to eliminate the interference of the glove palm structure with a good grip.

G. STATUS:

	Projected Date	Actual Date	Posted Date
Prototype B	1969	1969	1969
Prototype A	1968	1968	1969
Breadboards	1967	1967	1969

Developers:
Samuel J. Raff, Lawrence B. Johnson and Ernest Wilcomb
Raff Associates, Inc.
912 Thayer Avenue
Silver Spring, Maryland 20910

Manufacturer:
Hanover Industrial Machine Co.
1650 Broadway
Hanover, Pennsylvania 17331

Sponsor:
National Aeronautics and Space Administration
Ames Research Center
Moffett Field, California 94035
Contract No. NAS 2-5282

H. SPECIFICATIONS:

Length	16.4 in. (41.7 cm)
Width	5 in. (12.7 cm)
Height with smaller protective envelope	8.1 in. (20.6 cm)
Smaller protective envelope opening diameter	4.6 in. (11.7 cm)
Weight with smaller protective envelope (Including battery)	9.7 lb (4.4 kg)

I. SUPPORT EQUIPMENT:

Power Source: A removable, rechargeable, nickel cadmium battery is located in the tool housing.

Accessories: The tool will normally be used with six hex sockets ranging from 1/4 to 5/8 in. (0.64 to 1.59 cm), a flat blade driver, a Phillips driver and a 3/16 in. (0.48 cm) male hex driver. These are stored for easy access by the tool cuff system.

J. FOR MORE INFORMATION REFER TO:

Bibliography: 13, 43, 44, 45, 46

Tool Reference: The tool cuff.

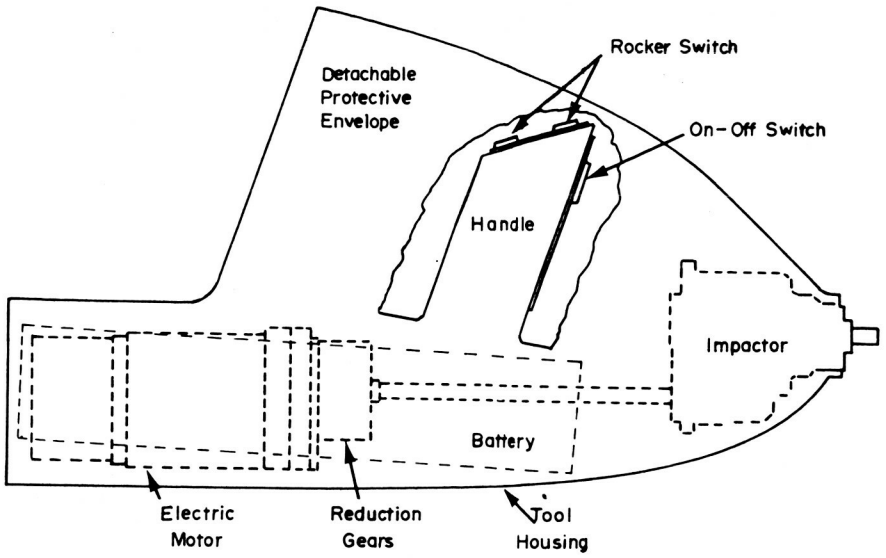

Figure 10-17a. Space Tool Mitten (Prototype B).
Drawing provided by Raff Associates, Incorporated.

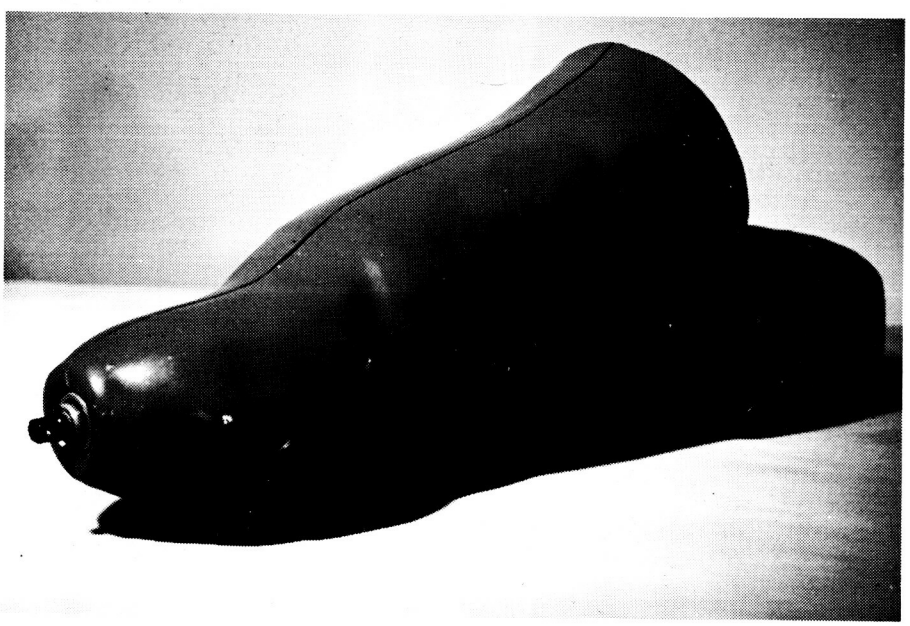

Figure 10-17b. Space Tool Mitten (Prototype A).
Photograph provided by Raff Associates, Incorporated.

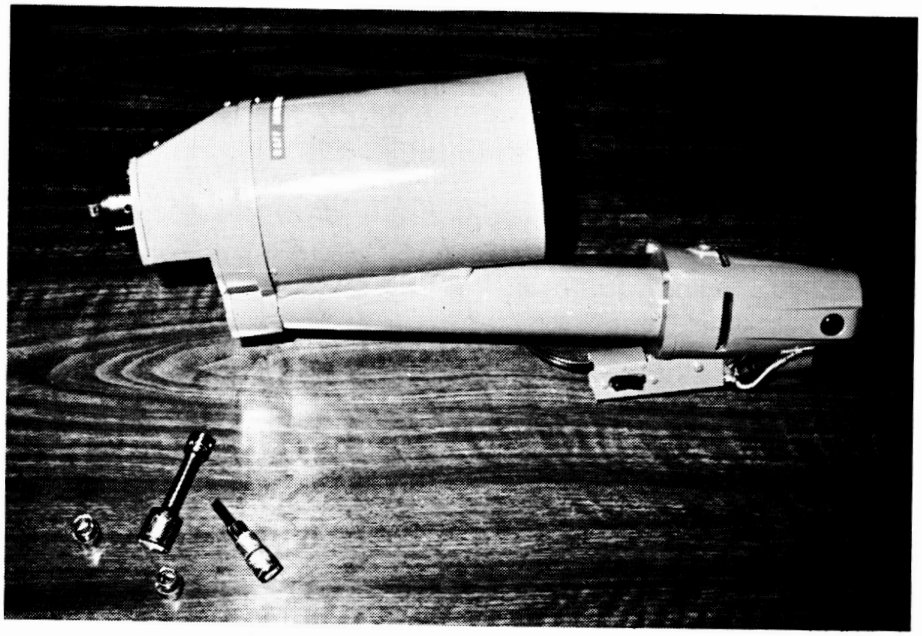

Figure 10-17c. Space Tool Mitten (Breadboard - Space Mitten). Photograph provided by Raff Associates, Incorporated.

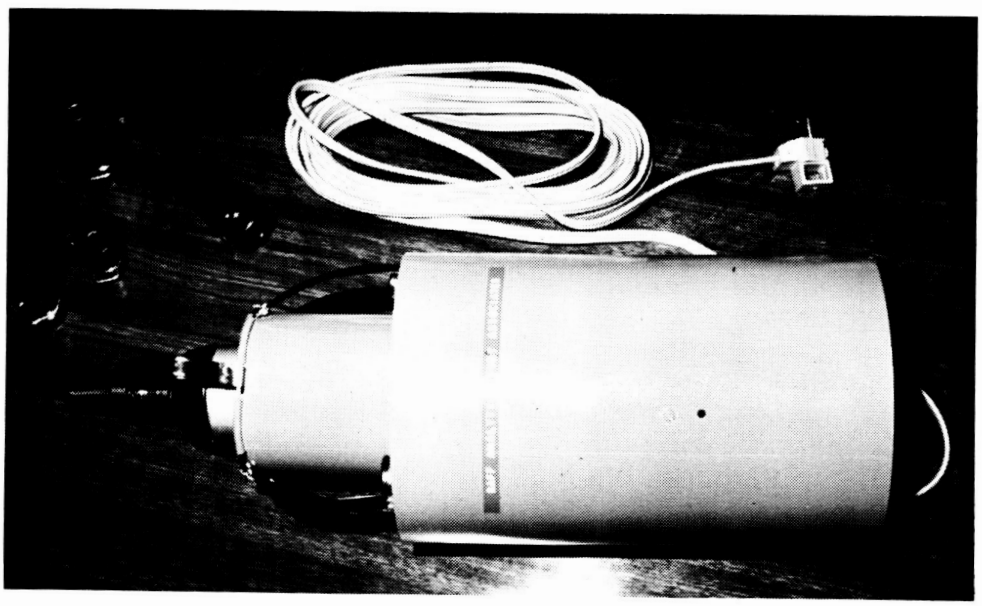

Figure 10-17d. Space Tool Mitten (Breadboard - Tool Mitten). Photograph provided by Raff Associates, Incorporated.

SPIN TORQUE SPACE TOOL

A. PURPOSE: The spin torque space tool was designed as a combination manual and power tool for tightening and loosening threaded fasteners. The tool was originally designed to be used in removing CALFAX fasteners that are located in the multiple docking adapter package of the Apollo spacecraft.

B. PREVIOUS SOLUTIONS: There have been no previous space validated systems.

C. CURRENT METHOD OF OPERATION: The spin torque space tool is a battery powered socket wrench designed to use a small reversible electric motor in the handle to provide the large angular motion for forward and reverse nut-running. Release of a trigger switch causes the handle to lock the driveshaft so that the astronaut can use the tool as a simple unpowered hand tool. In this mode the astronaut can apply greater torque with the tool than the motor can supply for setting or loosening the nut. The tool will have a collet mechanism to retain fasteners during installation and removal operations.

The tool is designed for two handed operation. The reversing switch can be operated by the thumb of either the left or right hand and the actuator switches can be operated by the index fingers of both hands.

D. RELATED FUNCTIONAL CATEGORIES: None.

E. PERFORMANCE: No record of accomplishment.

F. ADVANTAGES AND DISADVANTAGES: Unavailable.

G. STATUS:

	Projected Date	Actual Date	Posted Date
Prototype Model	1969		1969
Breadboard Model	1969	1969	1969

Developer:
A. Bienart
National Aeronautics and Space Administration
Marshall Space Flight Center
Huntsville, Alabama 35812

Sponsor:
National Aeronautics and Space Administration
Marshall Space Flight Center
Huntsville, Alabama 35812

H. SPECIFICATIONS:

Handle length	16 3/4 in. (42.5 cm)
Handle diameter	2 in. (5.08 cm)
Drive shaft length	7 3/4 in. (19.7 cm)
Drive	3/8 in. (0.95 cm)
Weight	6 lb (2.7 kg)
Motor voltage	27±3 V
Battery operating life	1 hr

I. SUPPORT EQUIPMENT:

Power Source: A 27 V battery is located in the handle.

Accessories: Several size sockets are used with this tool.

J. FOR MORE INFORMATION REFER TO:

Bibliography: 13

Tool Reference: None.

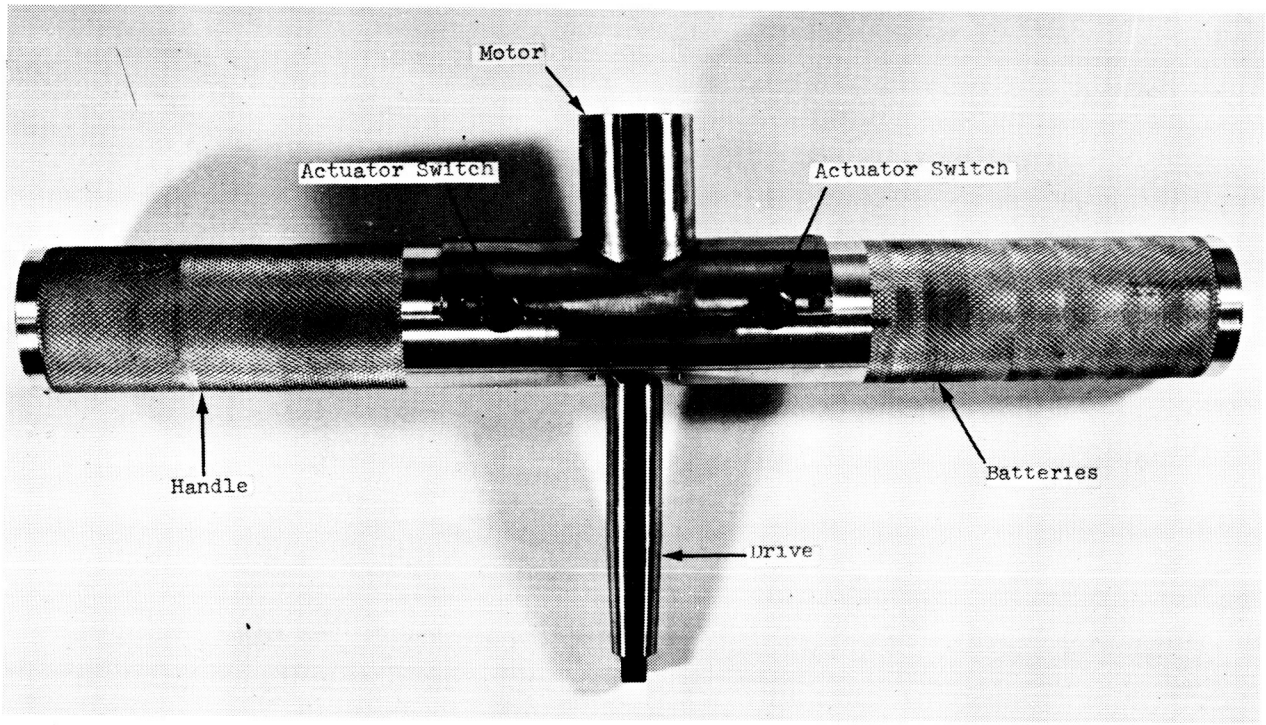

Figure 10-18a. Front View of the Spin Torque Space Tool. Photograph provided by the Marshall Space Flight Center.

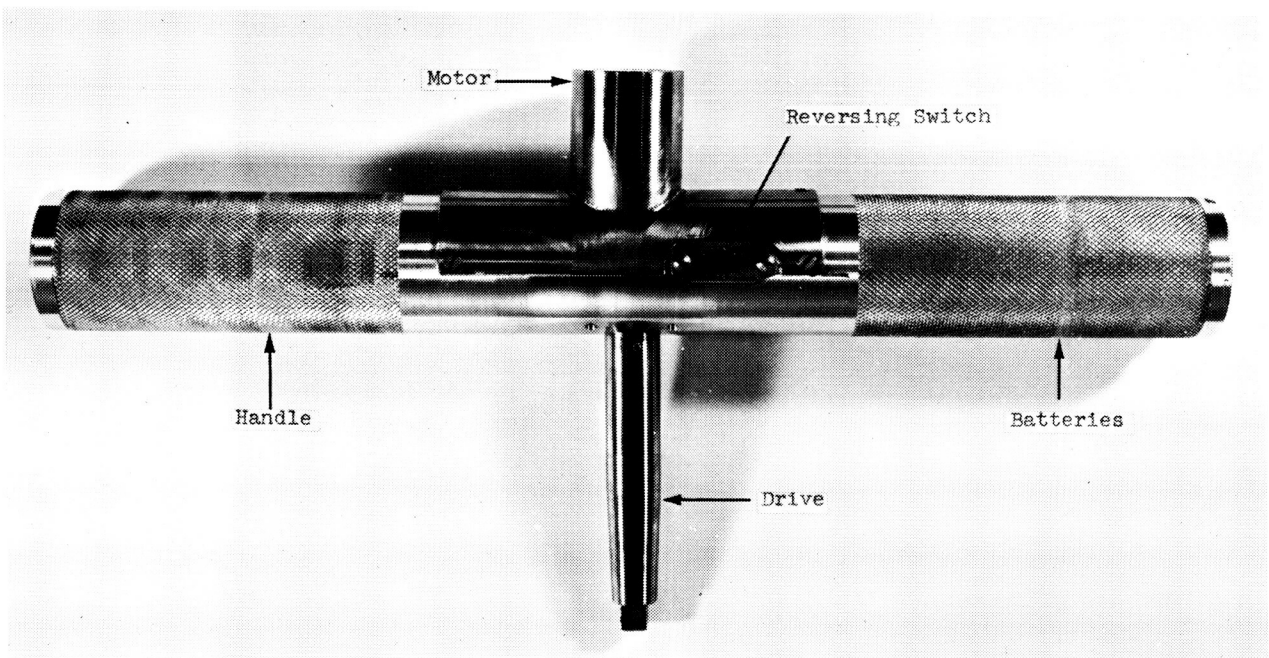

Figure 10-18b. Rear View of the Spin Torque Space Tool. Photograph provided by the Marshall Space Flight Center.

SPIRAL DRIVE SCREWDRIVER

A. PURPOSE: The spiral drive screwdriver was designed to reduce the amount of rotational motion necessary by the operator to tighten long threaded fasteners.

B. PREVIOUS SOLUTIONS: There have been no previous space validated solutions.

C. CURRENT METHOD OF OPERATION: The spiral drive screwdriver is a Yankee screwdriver, modified by the addition of two pistol grip handles, and an enlarged reversing button to facilitate pressure suited astronaut operations. A spiral drive converts the push-pull motions of the operator into a rotary motion of the socket drive. When the torque requirement becomes large, the drive can be locked and the operator can then rotate the entire tool to obtain a higher torque output.

D. RELATED FUNCTIONAL CATEGORIES: None

E. PERFORMANCE: Laboratory evaluations have shown that the tool has an unacceptably low torque output in the free running mode. Only a few inch-ounces of torque resistance were required to stall the tool.

F. ADVANTAGES AND DISADVANTAGES: In space hardware, virtually all bolts are of a minimum allowable length and this eliminates the need for tools designed exclusively for long lengths of free threads.

G. STATUS:

	Projected Date	Actual Date	Posted Date
Breadboard Model	1967	1967	1969

Developer:
National Aeronautics and Space Administration
Marshall Space Flight Center
Huntsville, Alabama 35812

Sponsor:
National Aeronautics and Space Administration
Marshall Space Flight Center
Huntsville, Alabama 35812

H. SPECIFICATIONS:

Drive. . . . . 1/4 in. (0.635 cm)

I. SUPPORT EQUIPMENT:

Power Source: This is a manually operated tool.

Accessories: Screwdriver bits and sockets are used with this tool.

J. FOR MORE INFORMATION REFER TO:

Bibliography: Personal Communications.

Tool Reference: None.

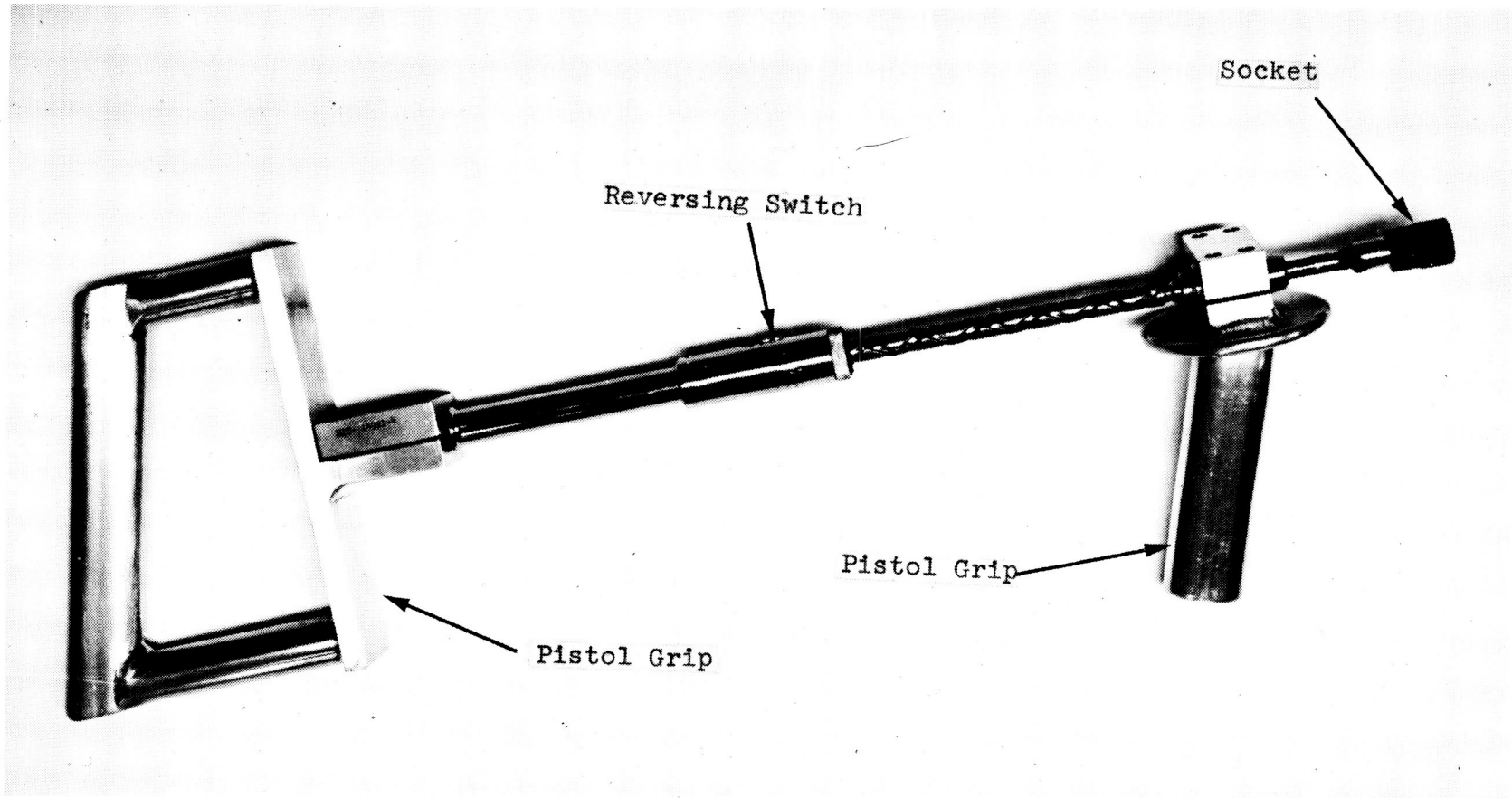

Figure 10-19. Spiral Drive Screwdriver. Photograph provided by the Marshall Space Flight Center.

T-HANDLE MULTI-FUNCTIONAL TOOL

A. PURPOSE: The T-handle multi-functional tool was designed as a rotary drive unit for various size socket, Allen wrench and screwdriver blade attachments.

B. PREVIOUS SOLUTIONS: There have been no previous space validated systems.

C. CURRENT METHOD OF OPERATION: The T-handle multi-functional tool has four major parts: (1) the turret head, (2) a reversible ratchet mechanism, (3) a T-handle and (4) a gauntlet. Any one of various size socket, Allen wrench and screwdriver blade attachments located on the turret can be put into operation by means of a simple rotation of the turret. Then torque, produced by the twisting hand motion on the T-handle, is applied to the fastener. The short twisting motions are translated into a large angular motion by means of the ratchet mechanism. The gauntlet serves to protect the sleeve of the space suit.

D. RELATED FUNCTIONAL CATEGORIES: None.

E. PERFORMANCE: No record of accomplishment.

F. ADVANTAGES AND DISADVANTAGES: The T-handle gauntlet is large, heavy and cumbersome. It is not possible to reach any area which is confined. The astronaut operating position for this tool was found to be impractical for use in a space environment.

G. STATUS:

	Projected Date	Actual Date	Posted Date
Breadboard Model	Unavailable	Unavailable	1969

Developer:
National Aeronautics and Space Administration
Marshall Space Flight Center
Huntsville, Alabama 35812

Sponsor:
National Aeronautics and Space Administration
Marshall Space Flight Center
Huntsville, Alabama 35812

H. SPECIFICATIONS:

Length	16-1/2 in.	(41.9 cm)
Maximum diameter	7-1/2 in.	(19.1 cm)
Weight	6 lb	(2.27 kg)

I. SUPPORT EQUIPMENT:

Power Source: This is a manually operated tool.

Accessories: Various size socket, Allen wrench and screw-driver blade attachments can be placed on the turret head.

J. FOR MORE INFORMATION REFER TO:

Bibliography: 72

Tool Reference: None.

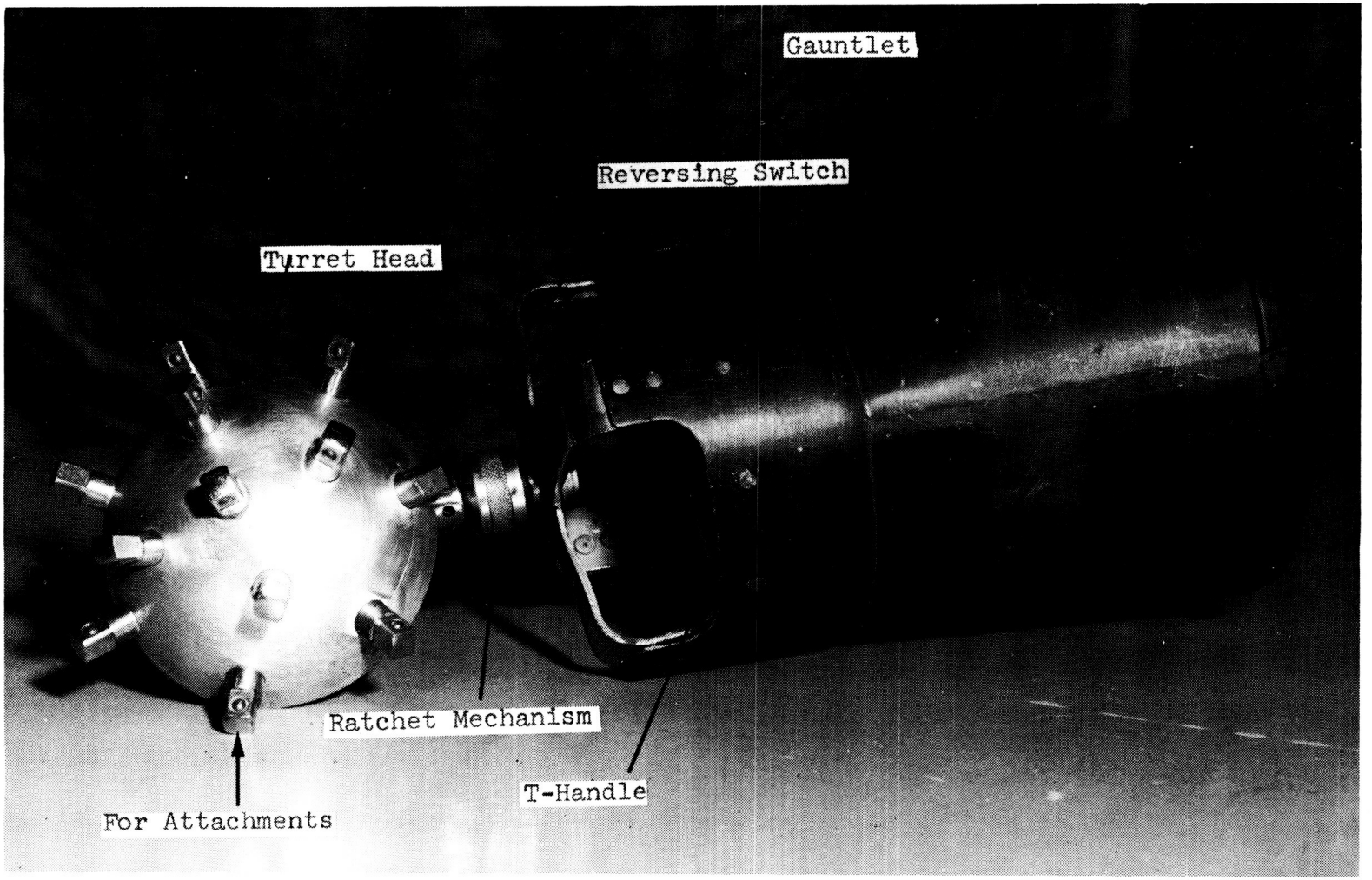

Figure 10-20. T-Handle Multi-Functional Tool.
Photograph provided by the Marshall Space Flight Center.

ZERO REACTION SPACE WRENCH

A. PURPOSE: The zero reaction space wrench was designed as a ratcheting, zero-reaction socket wrench for space operations.

B. PREVIOUS SOLUTIONS: There have been no previous space validated systems.

C. CURRENT METHOD OF OPERATION: The operator applies opposing forces to the plier-like wrench handles by squeezing them with one hand. The opposing forces are then transformed into a torque output by the wrench. The reaction torque is transferred to the space vehicle by two protruding pins which fit in pre-drilled holes on each side of the fastener.

D. RELATED FUNCTIONAL CATEGORIES: None.

E. PERFORMANCE: Qualitative tests were made on a six-degree-of-freedom simulator, and on flights of a Boeing KC-135 and of a Convair C-131 flying in Keplerian trajectories. The arrangement of the handles proved unsatisfactory because: (1) the position required for the operator's hand was both inconvenient and tiring, (2) the particular squeezing action required was too arduous, and (3) the distance between the handles was excessive for the average hand. The pins cancelled only pure torque and not other types of forces. The amount of work required to tighten or loosen a nut was excessive.

F. ADVANTAGES AND DISADVANTAGES: The tool is powered and operated by one hand. The use of pins to attach the wrench to the work site actually increases the complexity of the system, since two holes must be drilled to accommodate the pins.

G. STATUS:

	Projected Date	Actual Date	Posted Date
Prototype Model	unavailable	unavailable	1969

Developer:
Martin Marietta Corporation
P. O. Box 179
Denver, Colorado 80201

Sponsor:
Martin Marietta Corporation
P. O. Box 179
Denver, Colorado 80201

H. SPECIFICATIONS: Unavailable.

I. SUPPORT EQUIPMENT:

Power Source: This is a manually operated tool.

Accessories: Several different size sockets can be used with this tool.

J. FOR MORE INFORMATION REFER TO:

Bibliography: 36, 38, 39, 63

Tool Reference: Boeing torque cancelling tool, nut and bolt wrench and plench.

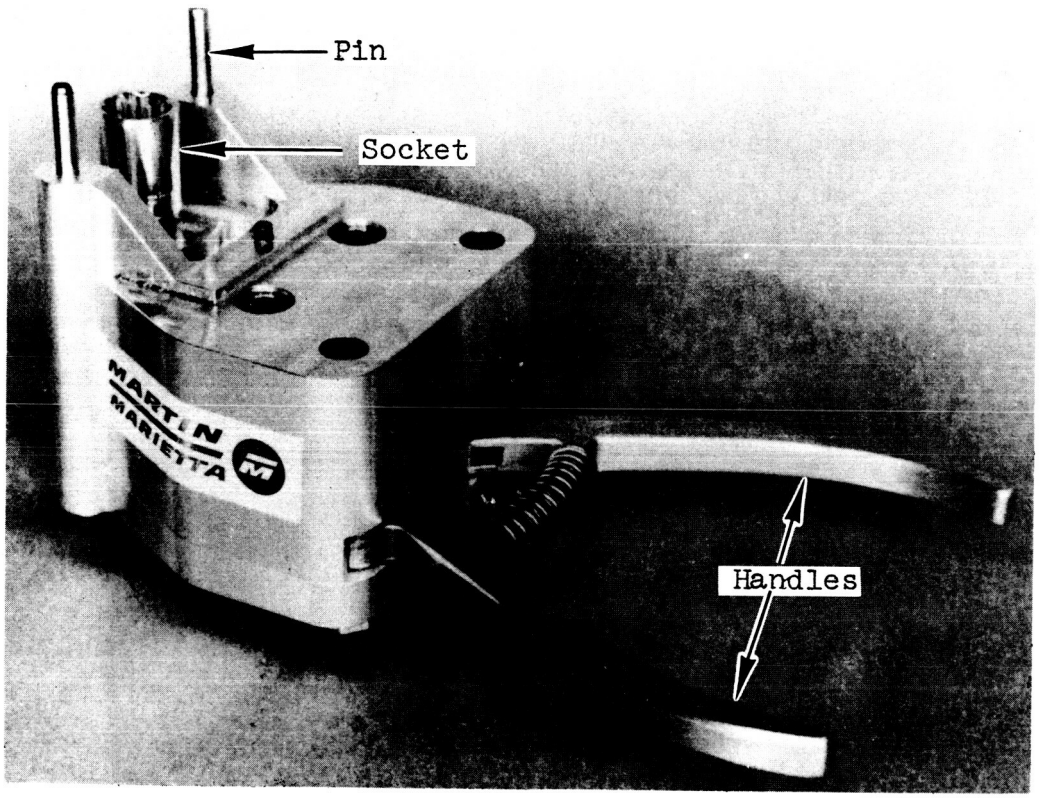

Figure 10-21. Zero Reaction Space Wrench. Photograph provided by the Marshall Space Flight Center.

SECTION 11

TUBE CONNECTION TOOLS

It is anticipated that there will be a great deal of metal tubing used in space vehicles of the future for fluid and gas lines. A fabrication capability will be required for tubing systems in space stations and for activities such as manufacturing in space. These systems may require modification and will suffer damage due to stresses and vibrations arising from vehicle accelerations or micrometeorite penetrations. A basic task in the fabrication and repair of tubing systems is the connection of tubing sections. In the following pages, some of the tools that have been developed to perform these tasks are described.

SEMI-REMOTE SPUNFIT WRENCH

A. PURPOSE: The semi-remote spunfit (Space Union and Fitting) wrench was designed for turning hydraulic fittings located deep in the structure of a space vehicle.

B. PREVIOUS SOLUTIONS: There have been no previous space validated solutions.

C. CURRENT METHOD OF OPERATION: The head of the semi-remote wrench locks onto the fitting. Gripping and turning jaws, located in the head, are actuated by a flexible cable which is connected to scissors-like handles. The scissor motion of the handle during operation causes gripping dogs in the tool head to turn the female tube fitting at the same time holding the male tube-to-tube connector stationary.

D. RELATED FUNCTIONAL CATEGORIES: None.

E. PERFORMANCE: No record of accomplishment.

F. ADVANTAGES AND DISADVANTAGES: The head of the tool can be made very small to allow it to slip into very tight quarters. After locking the tool on a fitting, the astronaut can work in various positions, loosening or tightening fittings with no reactions placed on himself or the spacecraft.

G. STATUS:

	Projected Date	Actual Date	Posted Date
Prototype Model	1962	1962	1969

Developer:
American Machine and Foundry Company
Government Products Group
261 Madison Avenue
New York, New York

Sponsor:
American Machine and Foundry Company
Government Products Group
261 Madison Avenue
New York, New York

H. SPECIFICATIONS: Unavailable.

I. SUPPORT EQUIPMENT:

Power Source: This is a manually operated tool.

Accessories: None.

J. FOR MORE INFORMATION REFER TO:

Bibliography: 19

Tool Reference: None.

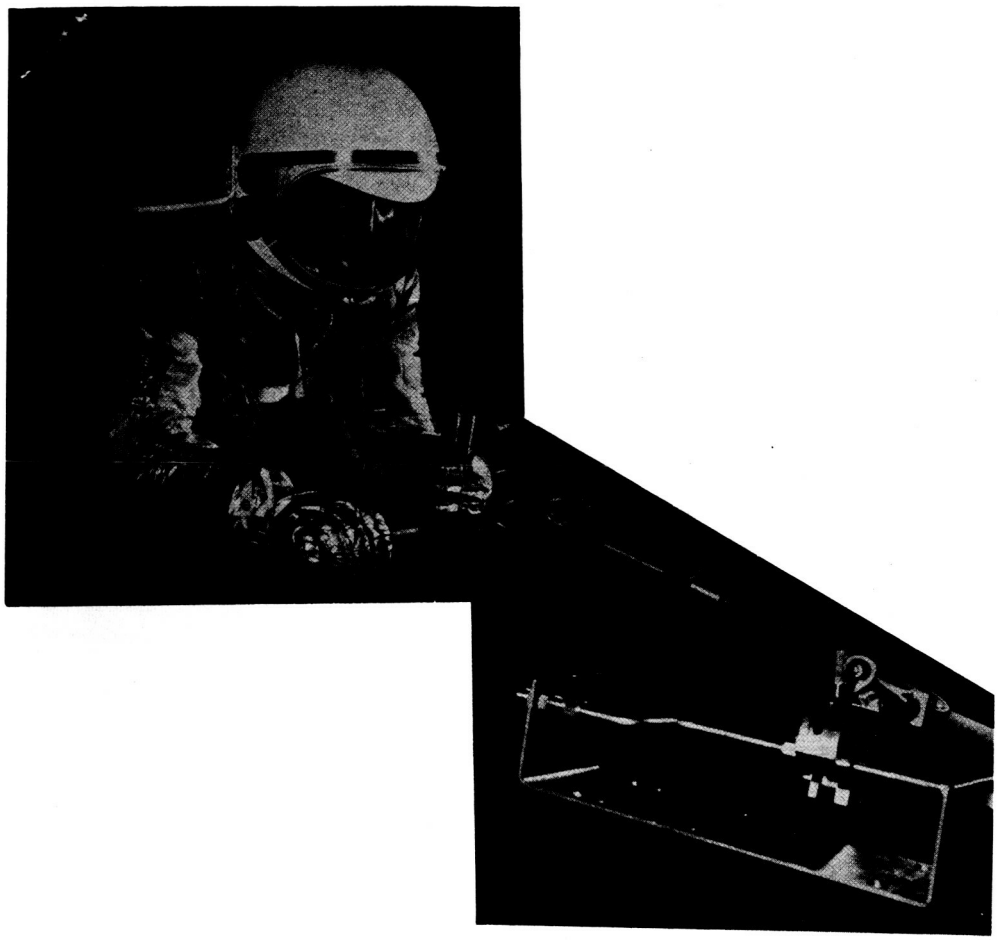

Figure 11-1. Semi-Remote Spunfit Wrench. Photograph provided by Machine Design.

SPUNFIT WRENCH

A. PURPOSE: The spunfit (Space Union and Fitting) wrench is used to connect and disconnect hydraulic tube fittings.

B. PREVIOUS SOLUTIONS: There have been no previous space validated solutions.

C. CURRENT METHOD OF OPERATION: The spunfit wrench consists of two wrenches. The holding wrench fits over the hex on an ordinary 37° or 45° (0.65 or 0.79 rad) tube-to-tube male connector. Side plates on the square, hex-gripping slate prevent the tool from slipping off the fitting. The ratcheting wrench fits over the corresponding female fitting. When the fittings are loose, ratcheting action of the wrench is controlled by a finger trigger. As the fitting tightens and becomes capable of exerting drag, the wrench automatically ratchets with the spring loaded jaw which slips around the hex in one direction. The widths of the handles are adjustable to accomodate various space suit glove inflation pressures. In a final production model of this tool, snap-on head would be supplied for fittings of various sizes.

D. RELATED FUNCTIONAL CATEGORIES: None.

E. PERFORMANCE: No record of accomplishment.

F. ADVANTAGES AND DISADVANTAGES: This is a fairly large tool that would be difficult to use in cramped quarters.

G. STATUS:

	Projected Date	Actual Date	Posted Date
Prototype Model	1962	1962	1969

Developer:
American Machine and Foundry Company
Government Products Group
261 Madison Avenue
New York, New York

Sponsor:
American Machine and Foundry Company
Government Products Group
261 Madison Avenue
New York, New York

H. SPECIFICATIONS: Unavailable.

I. SUPPORT EQUIPMENT:

Power Source: This is a manually operated tool.

Accessories: None.

J. FOR MORE INFORMATION REFER TO:

Bibliography: 19, 20

Tool Reference: None.

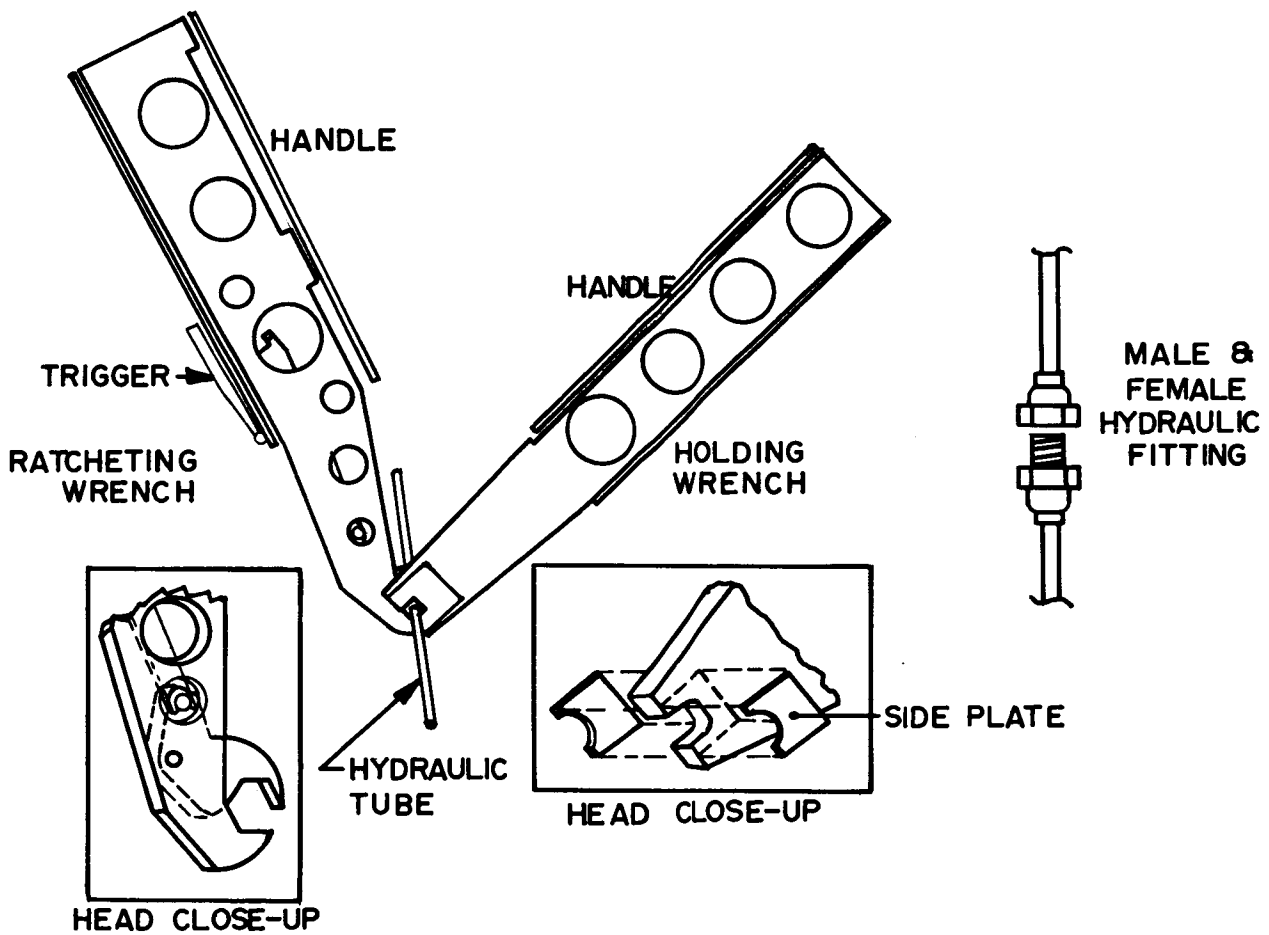

Figure 11-2. Spunfit Wrench. Drawing taken from Bibliography reference 19.

TUBE SWAGING DEVICE

A. PURPOSE: The tube swaging device was designed to join a sleeve on two sections of tubing (constructed of titanium, aluminum, stainless steel or copper) providing a leakproof, lightweight and strong connection. It was designed for use with liquid systems; however, it is felt that is could be used with gas systems.

B. PREVIOUS SOLUTIONS: There have been no previous space validated tube swaging devices.

C. CURRENT METHOD OF OPERATION: First, either one or two circular grooves are rolled into the ends of each section of tubing, using a cutoff tool with a roller in place of the usual cutting wheel. Then a sleeve, which should be slightly softer than the tubing, is placed over the end of one tube. The top of the tube swaging device is opened and closed over the tube and sleeve in such a manner that an annular ring cavity in the tool fits over the section of sleeve covering one of the grooves in the tube. A blank cartridge is fired into this cavity to increase the pressure on the surface of the sleeve inside the tool (to about 12 000 psi (8.3×10^7 N/m^2) in the case of aluminum tubing). The sleeve deforms and swages into the receiving groove, creating a sealed area. If another groove is on the tube, the sleeve is swaged into it too. Next, the second tube is placed into the other end of the sleeve and the above procedures are repeated. For applications requiring lower ultimate pressure couplings, grooves need not be rolled into the tubes. In this case, the sleeve is pressed into the tube such that depressions formed in the tube and sleeve interlock and form a seal.

D. RELATED FUNCTIONAL CATEGORIES: None.

E. PERFORMANCE: Laboratory tests on no-groove, one-groove and two-groove fittings in 3/8 in. (0.95 cm) O.D. x 0.035 in. (0.089 cm) wall 6061-T6 aluminum tubing have been performed. The sleeves were 7/16 in. (1.11 cm) O.D. x 0.035 in. (0.089 cm) wall 6061-O aluminum. Results with the no-groove fittings were poor in that the tubes tended to collapse slightly when swaged. This led to hydrostatic leaks at 300 psig (2.17×10^6 N/m^2) or less. The tube samples with grooved fittings withstood hydrostatic pressures of 2000 psig (1.4×10^7 N/m^2) without leaks. The sharp edges of the grooves bite into the sleeve resulting in a tightly sealed joint. With pressures greater than this, the sleeves, which were made of softer metal than the tubing, appeared to yield. Also, the sleeve would yield when there was a hydrostatic pressure of 300 psig (2.17×10^6 N/m^2) and a torque in excess of 75 in.-lb (8.5 m-N) was transmitted through the fitting.

F. ADVANTAGES AND DISADVANTAGES: Because the sleeve used in the swaging process is made of the same metal as the tubing, problems arising from differences in thermal and galvanic properties are eliminated. This fact is of particular importance when the tubing must carry highly reactive material such as hydrogen peroxide. Also, examination of the depression in the sleeve provides a simple and reliable indication of the quality of the seal provided.

G. STATUS:

	Projected Date	Actual Date	Posted Date
Prototype Model	1968	1968	1969

Developer:
Dwight G. McSmith
National Aeronautics and Space Administration
Langley Research Center
Hampton, Virginia 23365

Manufacturer:
George T. Abernathy
Newport News Shipbuilding and Drydock Co.
Newport News, Virginia 23602

Sponsor:
National Aeronautics and Space Administration
Langley Research Center
Langley Station
Hampton, Virginia 23365

H. SPECIFICATIONS: Unavailable.

I. SUPPORT EQUIPMENT:

Power Source: The tool uses 22 caliber blank cartridges.

Accessories: A modified cutoff tool can be used to prepare tubing and a supply of sleeves of appropriate sizes and material must be maintained.

J. FOR MORE INFORMATION REFER TO:

Bibliography: Personal Communications.

Tool Reference: None.

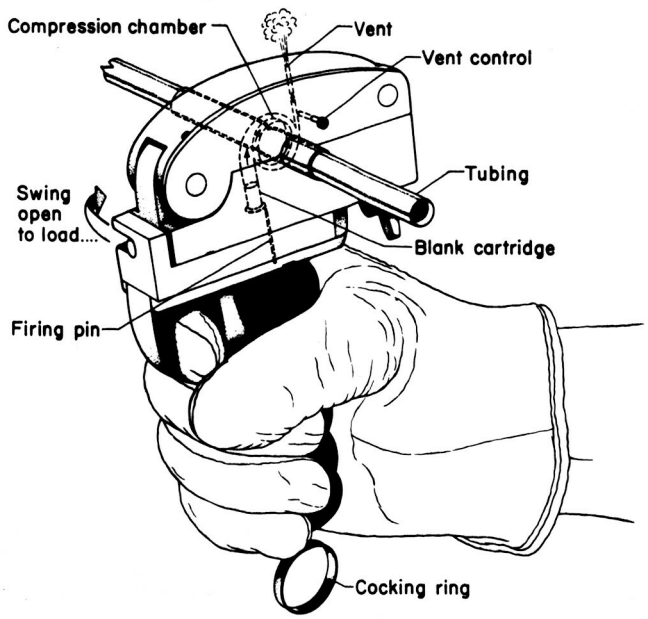

Figure 11-3a. Tube Swaging Device. Photograph provided by the Langley Research Center.

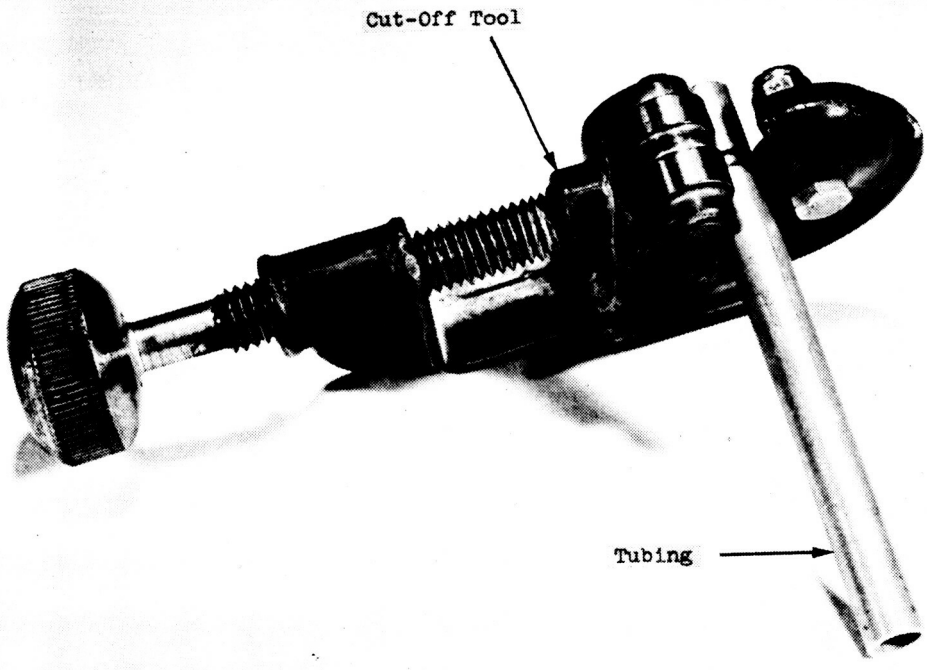

Figure 11-3b. Modified Cut-Off Tool. Photograph provided by the Langley Research Center.

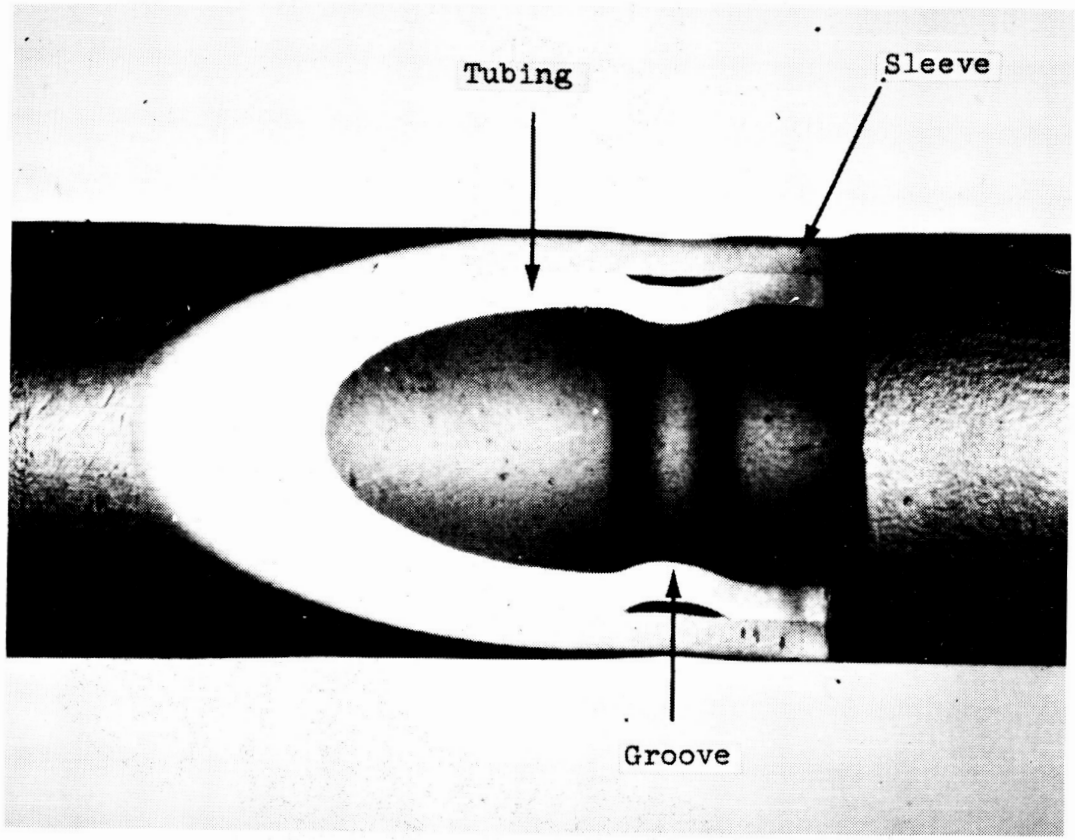

Figure 11-3c. Cutaway of Tube Fitting. Photograph provided by John Samos of the Langley Research Center.

SECTION 12

WELDERS

One of the most important techniques for in-space fabrication and maintenance will be the preparation of "leak-tight" joints. Any space structure that will be manned for a long period of time cannot permit excessive air or fluid leaks. Although many mechanical methods exist for the preparation of leak-tight joints, none can be compared to a metallurgical weld. Even in the best of mechanical joints there usually remains a small but nonetheless measurable leakage. If a large space structure is fabricated with mechanical joints, the total loss can become significant. A method for in situ welding is thus necessary.

In the following functional category, some of the hardware that have been developed for in-space welding will be reviewed.

HAND-HELD, ELECTRON-BEAM GUN

A. PURPOSE: The prototype hand-held electron-beam gun was designed to explore the possibility of using the electron beam concept to develop a simple portable welder for use in space.

B. PREVIOUS SOLUTIONS: There have been no previous space validated systems.

C. CURRENT METHOD OF OPERATION: The electron beam gun is a hand-held tool designed to operate with an external power supply. A heated cathode emits electrons which are accelerated by a bias cup and anode system and focused on the work piece by a magnetic lens. The work piece is heated to a weld temperature by absorption of the kinetic energy of the bombarding electrons. A warning light indicates the power is on. The handle has a safety on-off switch and an operating switch for actuating the tool. Two types of vapor radiation shields have been developed for use with this tool. Both automatically hold the gun at the correct distance from the work piece, and both have leaded glass windows to allow the astronaut to observe the welding process. The shields reduce emission of splattering material, electrostatic charging, and radiation. One shield is cylindrically shaped and rolls on bearings. The direction of travel and rate of speed are controlled by hand and auxiliary tracks that can be used to help guide the gun. The other shield, an open-bottomed, box shaped shell, is placed over the work surface and remains fixed in position as the gun runs down a track on the top of the shield.

D. RELATED FUNCTIONAL CATEGORIES: None.

E. PERFORMANCE: In man-rated chamber tests performed at 5.02×10^{-7} psi (3.46×10^{-3} N/m^2), the gun was found to work well. It was established that satisfactory butt welds can be made in aluminum, titanium, and stainless steel of material thickness up to 0.125 in. (0.318 cm) at a rate of 15 in./min (0.635 cm/sec).

F. ADVANTAGES AND DISADVANTAGES: The grid cup, cathode insulator and filament mounting pieces comprise one subassembly that is removable as a unit to permit bench-type servicing.

G. STATUS:

	Projected Date	Actual Date	Posted Date
Prototype Model	1966	1966	1969

Developers:
F. R. Schollhammer, G. Lawrence, and
R. F. Donovan
United Aircraft Corporation
Industrial Products Department
Hamilton Standard Division
Windsor Locks, Connecticut 06096

Sponsor:
National Aeronautics and Space Administration
Marshall Space Flight Center
Huntsville, Alabama 35812
Contract No. NAS 9-4501

H. SPECIFICATIONS:

Tool with cylindrical shield:

Cable length	50 ft	(15.3 m)
Diameter	3.5 in.	(8.9 cm)
Length	10 in.	(25.4 cm)
Weight	10 lb	(4.54 kg)
Accelerating voltage	20 kV	
Current	150 mA	

I. SUPPORT EQUIPMENT:

Power Source: An external power supply is required. It must provide 150 mA at 20 kV for an electron-beam accelerating voltage and current, and 25 A at 20 V for the filament heating, the warning light, the magnetic lens and the bias on the bias cup.

Accessories: A workpiece fixture assembly was used with the electron-beam gun for producing the first series of welds in a man rated vacuum chamber. The assembly provided a mount for the metal plates to be welded, tracks to guide the gun, and further shielding for the operator from emissions from the workpiece.

J. FOR MORE INFORMATION REFER TO:

Bibliography: 35, 52, 61, 62

Tool Reference: None.

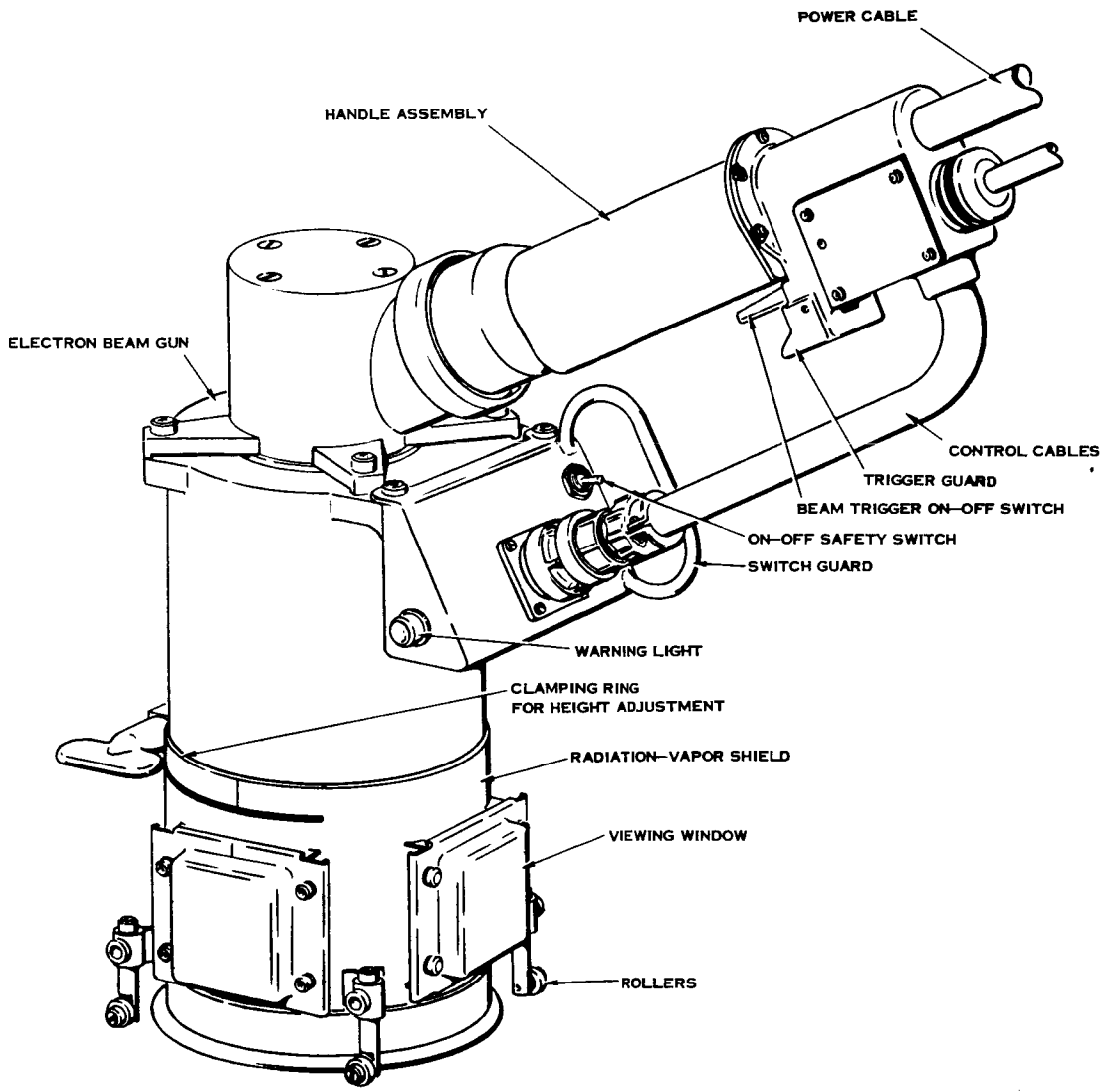

Figure 12-1. Hand-Held Electron Beam Welder.
Drawing taken from Bibliography reference No. 52.

MATERIALS JOINING TOOL

A. PURPOSE: The materials joining tool was designed to produce linear butt and lap welds between metal plates in one mode and to weld sections of tubing, wires or rods together in another with a minimum of maintenance operator training.

B. PREVIOUS SOLUTIONS: There have been no previous space validated systems.

C. CURRENT METHOD OF OPERATION: The materials joining tool consists of the handle assembly which holds the power switch and a gas cylinder and two attachments. One attachment is an open-bottomed, box shaped chamber that is placed over a gap between plates to produce a butt or lap weld. The length of the weld can be adjusted from 0.03 in. (0.076 cm) to 6 in. (15.2 cm) by an adjustment handle on the chamber that controls an adjustable cathode shield in the chamber. With this attachment the tool is called the linear tool. The other attachment is a cylindrical chamber that opens up to surround and hold in place two sections of tubing, wires or rods for welding. The openings in the diaphragm mechanisms at each end of the cylinder can be adjusted to hold different diameter workpieces. With this attachment the tool is called the annular tool.

When a weld is to be made, the operator attaches the appropriate chamber to the handle assembly and places it over the workpiece. Gas is released from the gas cylinder into the chamber at a rate adjusted to maintain constant pressure. Then the gas in the chamber is ionized by a high potential applied between a cathode in the chamber and the chamber. Electrons from secondary emission produced when positive ions strike the cathode and electrons released in the ionization process are then accelerated and guided by the electric field towards the seam to be welded. The beam strikes the workpiece to form the weld. The process can be observed by the operator through mica windows in the sides of the chamber.

D. RELATED FUNCTIONAL CATEGORIES: None.

E. PERFORMANCE: The developers have performed vacuum tests in a bell jar. The linear tool was used in 0.03 in. (0.076 cm) and 0.06 in. (0.152 cm) thick stainless steel plates. Only spot welds were acceptable. The annular tool was used on 3/8 in. (0.95 cm) tubing, 3/8 in. (0.95 cm) rods and 0.035 in. (0.089 cm) to 0.044 in. (0.11 cm) wire. Satisfactory welds were made with stainless steel, copper and titatium. Because of its aluminum oxide coating, aluminum did not weld well. This problem would probably be reduced in space.

F. ADVANTAGES AND DISADVANTAGES: This tool was designed for simplicity of operation.

G. STATUS:

	Projected Date	Actual Date	Posted Date
Prototype Model	1968	1968	1969

Developer:
Marvin L. Kohn
United Aircraft Corporation
Industrial Products Department
Hamilton Standard Division
Windsor Locks, Connecticut 06096

Sponsor:
United States Air Force
Air Force Aero Propulsion Laboratory
Space Technology Branch
Air Force Systems Command
Wright-Patterson Air Force Base, Ohio 45433
Contract No. F33615-67-C-1424

H. SPECIFICATIONS:

	Linear Chamber	Annular Chamber
Length	6.0 in. (15.2 cm)	5.5 in. (14.0 cm)
Height	2.0 in. (5.1 cm)	
Width	3.0 in. ((7.6 cm)	
Diameter		6.0 in. (15.2 cm)
Weight	4.5 lb (2.04 kg)	9.5 lb (4.1 kg)
Handle Weight		4.25 lb (1.95 kg)
Accelerating voltage		5-7.5 kV
Current		200-300 mA

I. SUPPORT EQUIPMENT:

Power Source: An external power source (300 mA at 7.5 kV) is required.

Accessories: A small, 4.7 $in.^3$ (75 ml) gas cylinder at 415 psi (2.86×10^6 N/m^2) containing hydrogen, argon or air for a 10 min supply is required.

J. FOR MORE INFORMATION REFER TO:

Bibliography: 49, 50

Tool Reference: None.

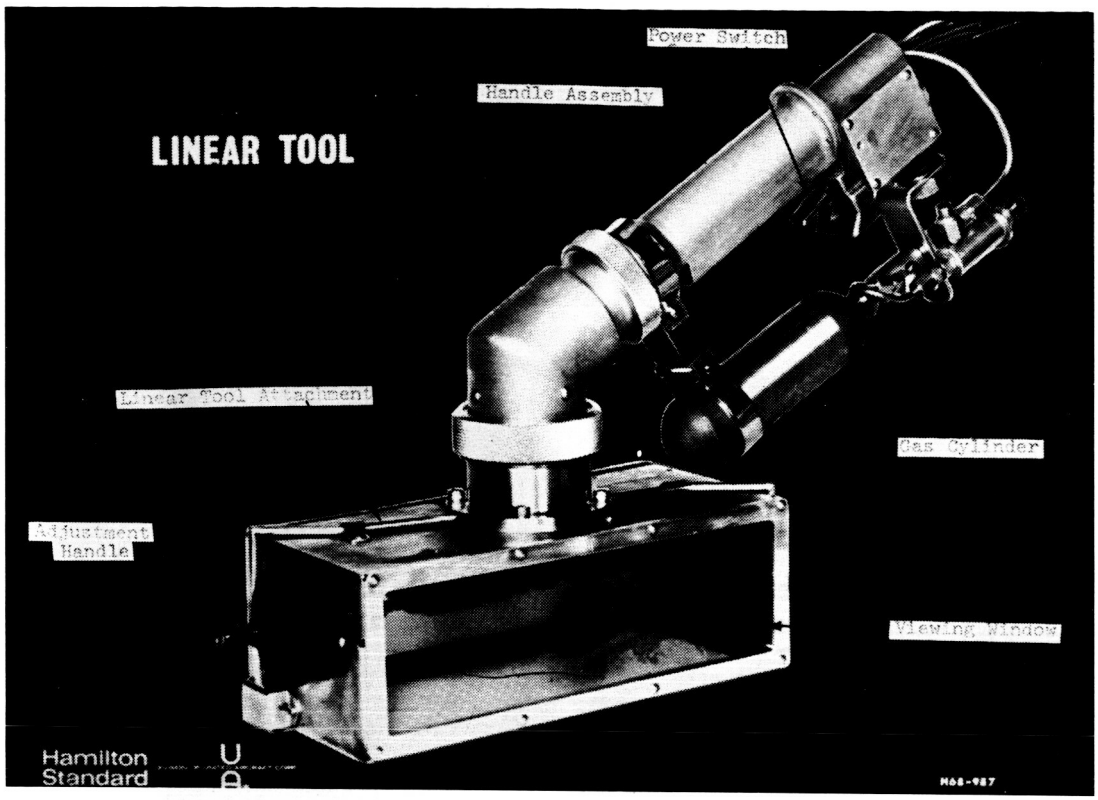

Figure 12-2a. Linear Materials Joining Tool. Photograph provided by the Hamilton Standard Division of United Aircraft Corporation.

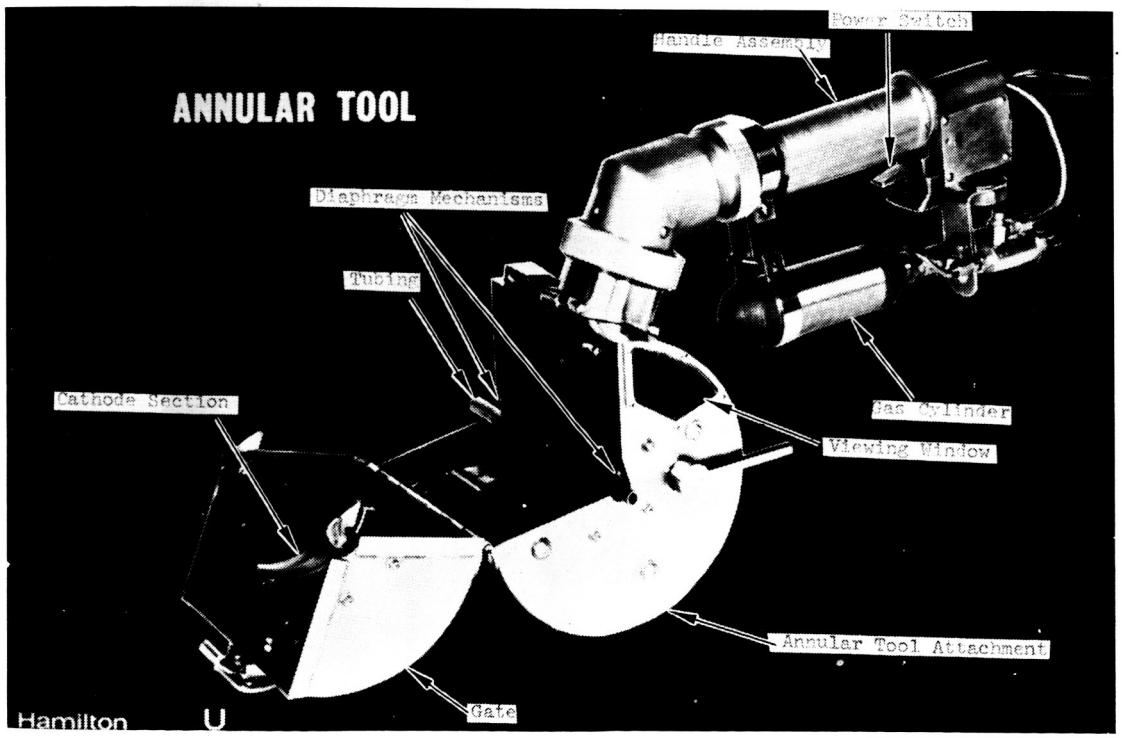

Figure 12-2b. Annular Materials Joining Tool. Photograph provided by the Hamilton Standard Division of United Aircraft Corporation.

PLASMA ELECTRON-BEAM WELDER

A. PURPOSE: The plasma electron-beam welder was designed to serve as a battery-operated, lightweight, portable welder for use in space.

B. PREVIOUS SOLUTIONS: There have been no previous space validated systems.

C. CURRENT METHOD OF OPERATION: The three cylindrical compartments of the plasma electron beam welder are arranged end to end in a row. The first compartment, the battery pack compartment, contains two batteries and is filled with nitrogen gas to prevent low pressure glow discharge. One battery supplies power to an electron gun. The other provides power for a focusing coil, control circuits, and accessories, such as lights, that may be used with the welder. The next compartment, the power supply compartment, contains a dc-to-dc converter to provide 25 kV for the electron gun. This compartment is pressurized with sulphur hexafluoride gas for high voltage and heat insulation. The last compartment, the plasma electron beam (PEB) chamber, contains the electron or PEB gun. This PEB gun first ionizes the low pressure gas in the PEB chamber. Then it accelerates and focuses electrons from secondary emission produced when positive ions strike its cathode and also electrons released in the ionization process into a beam. This beam leaves the PEB chamber through an exit tube at the other end of the chamber where it is further focused by an electromagnet surrounding the tube. When this beam strikes a piece of metal, it forms a weld. A servo mechanism, a gas supply cylinder and the welder control panel are mounted about the exit tube. The gas pressure in the PEB chamber is maintained by the servo mechanism which responds to the PEB gun supply current and adjusts a needle valve through which gas enters the PEB chamber from the supply cylinder. A gate valve at the end of the exit tube permits the PEB chamber to be sealed off when the welder is not in use.

D. RELATED FUNCTIONAL CATEGORIES: None.

E. PERFORMANCE: A standard PEB gun used at 25 kV demonstrated that the concept is feasible enough to produce welds that penetrate approximately 1/4 in. (0.635 cm) of 6061 aluminum alloy at 20 in./min (0.847 cm/sec).

F. ADVANTAGES AND DISADVANTAGES: The plasma electron beam welder is a light weight, self-contained welder. The battery feeds the tool by means of external plug-in cables. This plug-in arrangement facilitates replacement of the batteries if more than 10 minutes of operation is required. Unfortunately, no x-ray shields are included in the tool design and the battery discharge-recharge cycle is limited to approximately 3 cycles in these silver-zinc batteries.

G. STATUS:

	Projected Date	Actual Date	Posted Date
Breadboard Model	1968	1968	1969

Developers:
K. L. Boring, T. M. Dickinson, W. McMurray
L. H. Stauffer, E. F. Travis, and C. Zubal
General Electric Company
Research and Development Center
Schenectady, New York

Sponsor:
National Aeronautics and Space Administration
Marshall Space Flight Center
Huntsville, Alabama 35812
Contract No. NAS 8-11803

H. SPECIFICATIONS:

Input voltage	10 V
Acceleration voltage	25 kV
Power	2 kW

I. SUPPORT EQUIPMENT:

Power Source: The main battery supply is a rechargeable Yardney silver-zinc battery of 72 cells supplying 106 V and 33 A. After step up this supplies 3 kW at 25 kV. The auxiliary battery is a rechargeable Yardney silver-zinc battery of 20 cells supplying 28 V.

Accessories: The gas used in the PEB chamber is argon gas stored in a small cylinder at high pressure.

J. FOR MORE INFORMATION REFER TO:

Bibliography: 23

Tool Reference: None.

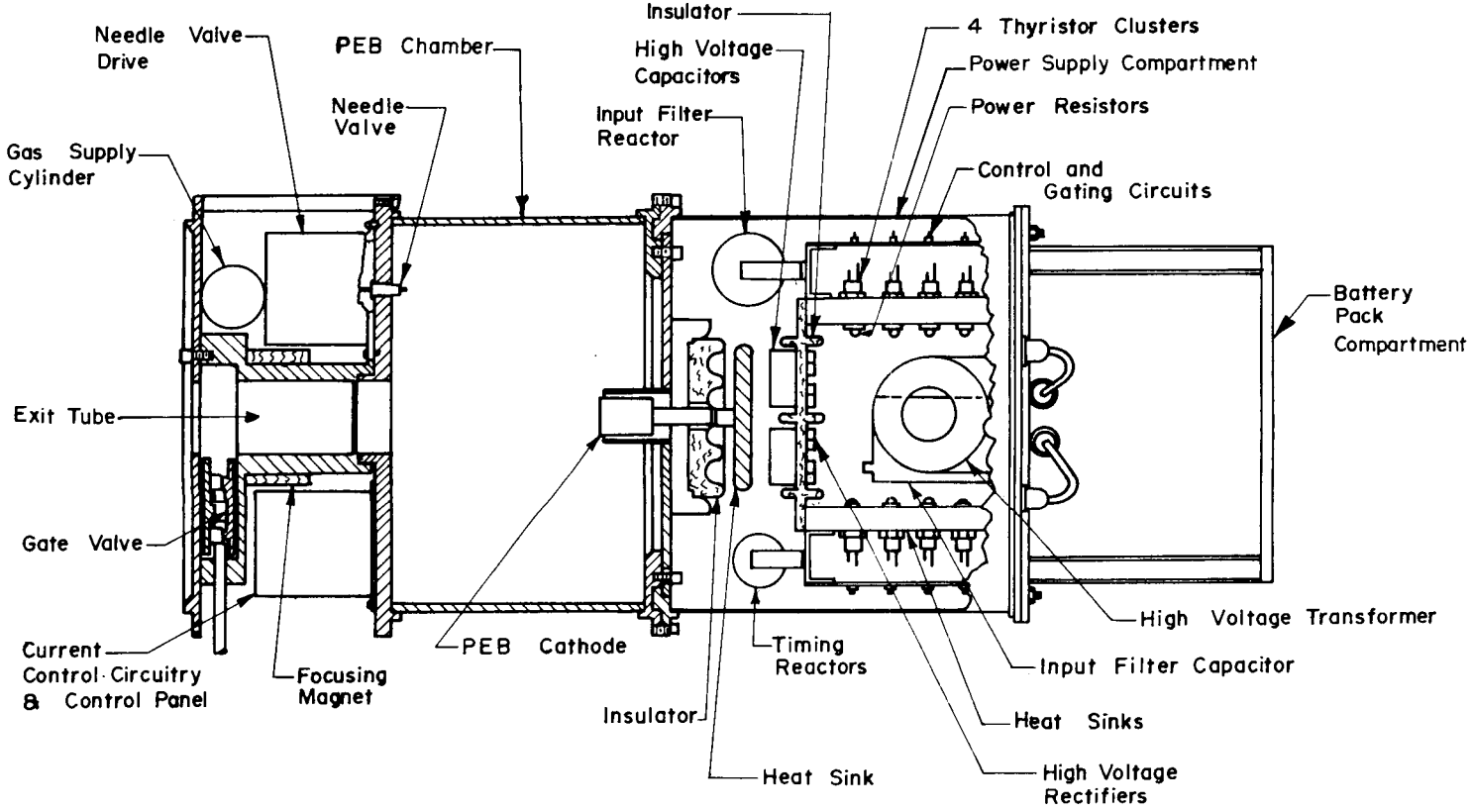

Figure 12-3. Plasma Electron Beam Welder. Drawing taken from Bibliography reference No. 23.

PORTABLE ELECTRON-BEAM WELDER (0.5 KW)

A. PURPOSE: The portable electron-beam welder (0.5 kW) was designed as a battery-operated, lightweight, portable welder for light welding jobs in space.

B. PREVIOUS SOLUTIONS: There have been no previous space validated systems.

C. CURRENT METHOD OF OPERATION: The portable electron-beam welder (0.5 kW) is similar to a pistol in appearance and in the manner it is operated by the astronaut. The astronaut holds the welder by a pistol grip handle and squeezes the trigger switch to activate the components in the barrel. The back of the barrel is a rechargeable battery pack. The middle section is a dc-to-dc converter that steps up the battery voltage for the electron gun. And the front of the barrel is an electron gun which accelerates electrons emitted by its filament and focuses them into an electron beam. When the beam strikes the metal around a seam or crack to be welded, the metal melts and the weld is formed. Because the welder has to be held very close to the workpiece and because the astronaut must be able to see the workpiece in order to aim the electron beam, a transparent shield surrounds the electron gun to shield the astronaut from secondary radiation and metal splatter.

D. RELATED FUNCTIONAL CATEGORIES: None.

E. PERFORMANCE: Unavailable.

F. ADVANTAGES AND DISADVANTAGES: The advantage of this welder is its self-contained operation. It offers sufficient degree of portability to permit a technician wearing a spacesuit to manually use the welder. The disadvantage is the very short battery power availability (life), therefore, very short welding time.

G. STATUS:

	Projected Date	Actual Date	Posted Date
Breadboard Model	1966	1966	1969

Developer:
F. R. Schollhammer
United Aircraft Corporation
Industrial Products Department
Hamilton Standard Division
Windsor Locks, Connecticut

Sponsor:
United Aircraft Corporation
Industrial Products Department
Hamilton Standard Division
Windsor Locks, Connecticut

H. SPECIFICATIONS:

Circuitry Unit

Diameter	8 in.	(20.3 cm)
Length	10 in.	(25.4 cm)

Electron Gun

Diameter	5 in.	(12.7 cm)
Length	4 in.	(10.2 cm)
Overall weight	45 lb	(20.4 kg)

I. SUPPORT EQUIPMENT:

Power Source: A series of small rechargeable storage batteries.

Accessories: None.

J. FOR MORE INFORMATION REFER TO:

Bibliography: 61

Tool Reference: None.

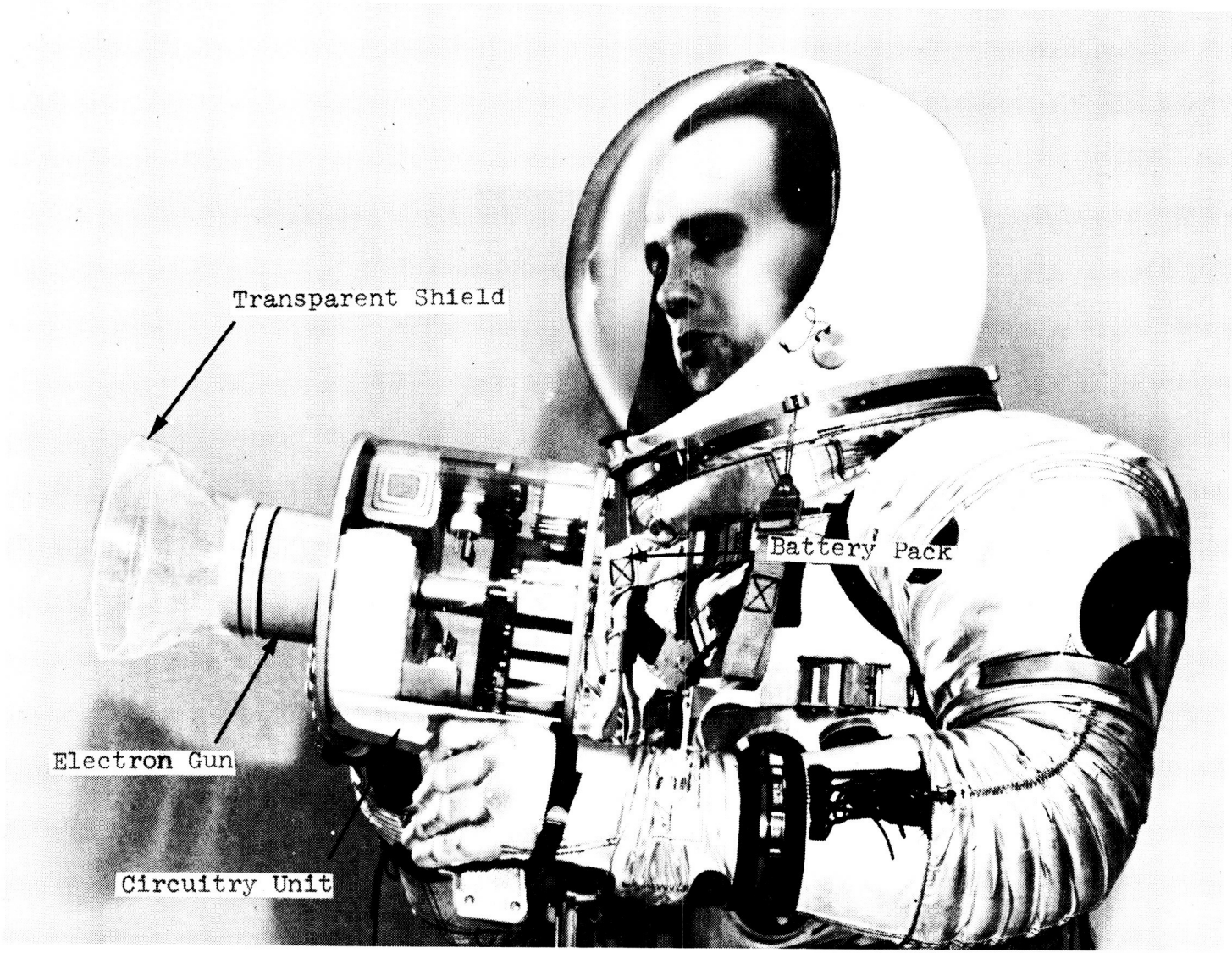

Figure 12-4. Portable Electron Beam Welder (0.5KW). Photograph provided by the Hamilton Standard Division of United Aircraft Corporation.

WESTINGHOUSE ELECTRON-BEAM WELDER

A. PURPOSE: The electron-beam welder was developed as a laboratory prototype, battery-operated, lightweight, portable welder for use in space on all metal structures of the space-vehicle.

B. PREVIOUS SOLUTIONS: There have been no previous space validated systems.

C. CURRENT METHOD OF OPERATION: The electron-beam welder is designed to be mounted in a glass or metal vacuum cylinder or placed inside a large vacuum chamber for welding tests. A stainless steel vessel contains the main battery pack, dc-to-dc converter with a step-up transformer, filament battery pack, and a filament control circuit. The vessel is pressurized to 60 psi (4.14×10^5 N/m^2) with sulphur hexafluoride to permit small high-voltage clearances. The filament which provides electrons, is held at a high negative potential. The grid, at a lesser negative potential, and the anode, grounded to the steel casing, serve to accelerate and focus the electrons. The magnetic lens focuses the beam even further. The kinetic energy of these electrons are then absorbed by the workpiece in the form of heat and a weld is formed. A cable from the welder to a control panel outside of the vacuum chamber can be attached to external power supplies to conserve the batteries. A keeper valve seals the high-voltage chamber of the electron gun to maintain a vacuum while welding specimens are changed.

D. RELATED FUNCTIONAL CATEGORIES: None.

E. PERFORMANCE: A weld specimen has been made in 1/8 in. (0.32 cm) 18-8 stainless steel at 37 in./min (1.56 cm/sec).

F. ADVANTAGES AND DISADVANTAGES: This is the first light-weight, self-contained electron beam welder. Unfortunately, shielding must be provided by the vacuum chamber walls or protective clothing, for protection against x-rays produced by the gun.

G. STATUS:

	Projected Date	Actual Date	Posted Date
Breadboard Model	1968	1968	1969

Developer:
Astronuclear Lab of the
Westinghouse Electric, Corporation
Pittsburgh, Pennsylvania

Sponsor:
National Aeronautics and Space Administration
Marshall Space Flight Center
Huntsville, Alabama 35812

H. SPECIFICATIONS:

Accelerating voltage	20 kV
Power	2 kW
Weight	61 lb (27.7 kg)
Length	21 in. (53.3 cm)
Diameter	12 in. (30.5 cm)
Magnetic lens protrusion	10 in. (25.4 cm)

I. SUPPORT EQUIPMENT:

Power Source: The welder may use an external supply or two internal rechargeable batteries. The main battery pack consists of 27 rechargeable silver-zinc batteries connected in series to produce 70 A at 35 V. A dc-to-dc converter with a step-up transformer steps the potential up to 20 kV at 100 mA. This power is normally used at about five minutes at a time. The filament battery consists of 3 silver-zinc cells in series to produce 4.3 V under filament load.

Accessories: None.

J. FOR MORE INFORMATION REFER TO:

Bibliography: 4

Tool Reference: None.

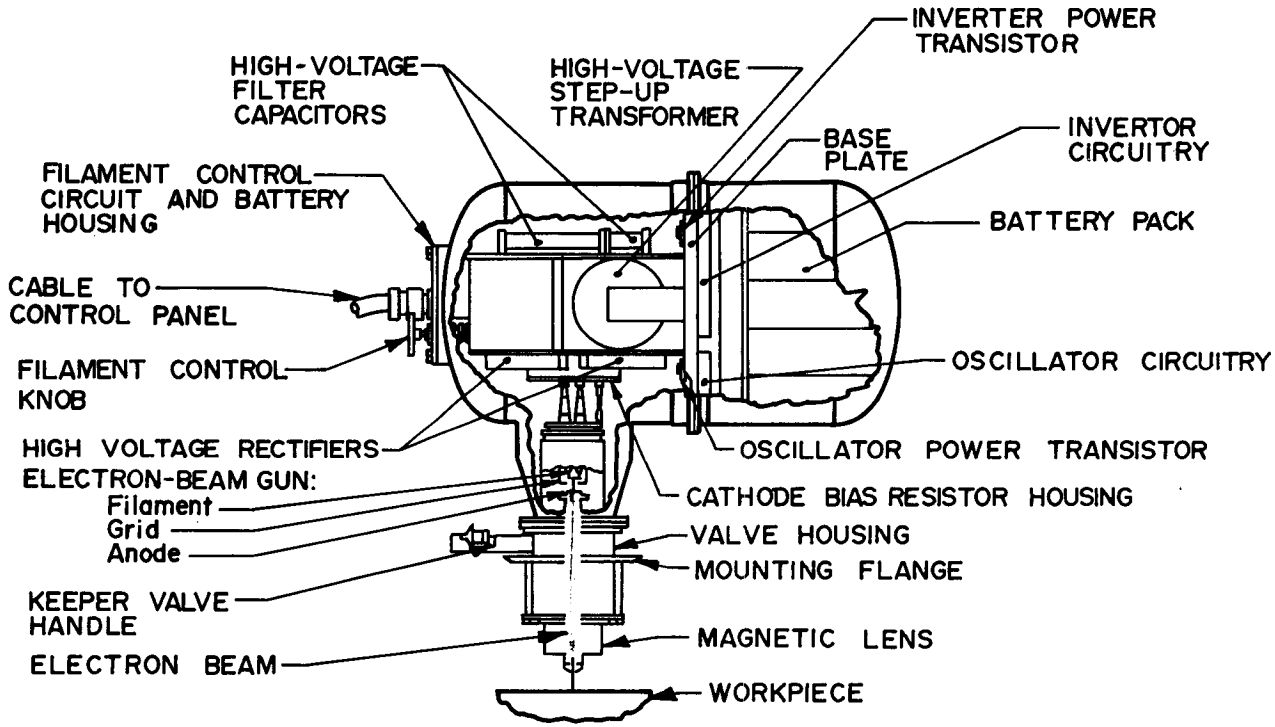

Figure 12-5. Westinghouse Electron Beam Welder.
Drawing taken from Bibliography reference No. 4.

BIBLIOGRAPHY

1. Anon.: Aldrin Shows Man Can Work in Space. Aviation Week and Space Technology, November 21, 1966, pp. 30.

2. Anon.: Apollo In-Flight Maintenance Concept. North American Aviation, Inc., NAS9-150, April 5, 1964.

3. Anon.: Astronaut's Tool for Withdrawing/Replacing Computer Cards. NASA Tech. Brief 69-10183, July 1969.

4. Anon.: Electron Beam Welding in Space. The Engineer, Vol. 225, June 28, 1968, pp. 1024-5.

5. Anon.: Extendable Booms in Space. Engineering, Vol. 202, August 1966, pp. 247.

6. Anon.: Final Report for Cutting Tool for Use in Space. AAI, Inc., July 1967.

7. Anon.: Flight System Familiarization Manual (Revision A) Apollo Lunar Surface Experiments Package (ALSEP). NASA 9-5829, August 1, 1968.

8. Anon.: Non-Vacuum EB Makes Bid for Apollo Project. Welding Engineer, May 1966, pp. 81.

9. Anon.: Operating and Maintenance Instruction for Tool, Bolt Installation and Removal. Aerojet General Corp., AN-1698, August 1969.

10. Anon.: Phase C Final Report/Phase D Technical Proposal for Apollo Surface Drill (ALSD). Martin-Marietta Corp., ER 14349P, August 18, 1966.

11. Anon.: Pilot Model Leak Detector for Space Environment. Melpar, Inc., NASA MSFC, Contract No. NAS8-20621, March 1969.

12. Anon.: Qualification Test Report of Pilot Model Leak Detector for Space Environment. Melpar, Inc., NASA MSFC, Contract No. NAS8-20621, March 1969.

13. Anon.: RFQ 1-9-30-35365, Marshall Space Flight Center, Issued March 1, 1969, Due April 11, 1969.

14. Anon.: RFQ 1-9-30-35368, Marshall Space Flight Center, Issued February 28, 1969, Due March 31, 1969.

15. Anon.: RFQ 1-9-30-35371, Marshall Space Flight Center, Issued January 24, 1969, Due March 24, 1969.

16. Anon.: Space Wrench Won't Rotate the Astronaut. Machine Design, August 1965.

17. Anon.: Special Support Devices, Martin, No Date.

18. Anon.: Special Tool Kit Aids Heavily Garmented Workers. Martin-Marietta Corp., NASA Tech. Brief 66-10403, September 1966.

19. Anon.: Tools for Space. Machine Design, November 22, 1962, pp. 134-138.

20. Anon.: What Will the Maintenance Tools of Astronaut Mechanics Be Like? Naukai: Zhizn (Russian), Translated by Air Force Systems Command, Foreign Technology Division, Wright-Patterson Air Force Base, November 8, 1964, pp. 124-125.

21. Asbury, E. J.: Open End Flat Ratchet Wrench. ORGDP K-D-2189, July 18, 1969.

22. Blaise, H. T.: Contract Acceptance Bench Testing Bolt Installation and Bolt Removal Tool (BIRT), Marshall Space Flight Center, 1969.

23. Boring, K. L.; Dickinson, T. M.; McMurray, W.; Stauffer, L. H.; Travis, E. F.; and Zubal, C.: Plasma Electron Beam Welder for Space Vehicles. General Electric Research and Development Center, August 1968.

24. Brecker, L.: Working in Space: Are We Ready? Space Aeronautics Magazine, October 1966.

25. Coleman, E. R.: Evaluation of S-IVB Window Emplacement Tool Kit. Hayes International Corp., January 29, 1969.

26. Crouch, D. S.: Design Study for Lunar Exploration Hand Tools. Martin Company, NASA MFC, December 1965.

27. Crouch, D. S.: Familiarization and Support Manual Apollo Lunar Surface Drill (ALSD). Martin Marietta Corp., ER 14756, July 15, 1968.

28. Crouch, D. S.: Final Report for Apollo Lunar Surface Drill (ALSD). Martin Marietta Corp., ER 14778, Manned Spacecraft Center, November 1, 1968.

29. Crouch, D. S.: Second Quarterly Report, Design Study for Lunar Exploration and Tools. Martin Company, NASA CR-65693, April 1965.

30. Daisy, F. K.: Program 631A Volume 13, Technical Report Experiment D 16, Space Power Tool. Martin Company, Technical Report AFAPL-TR-67-61, June 1967.

31. Daisy, F. K.: Space Power Tool. Martin Company, Tech. Report No. RTD-TDR-63-4227, April 1964.

32. Daisy, F. K.: Space Power Tool System for Experimentation on Gemini. Martin Company, Tech. Report AFAPL-TR-66-61, August 1966.

33. DeMarino, D.: Extravehicular Space Maintenance. Grumman Aircraft Engineering Corp., December 15, 1966

34. Edmund, I.: Space Power Tool. George C. Marshall Space Flight Center, June 18, 1968.

35. Eshelman, R. H.: Challenge - Ways to Work Metals in Rigors of Outer Space. Ironage, March 1964.

36. Fagan, R. L; and Wilson, M. A.: Maintainability in Space - A Survey. General Electric Co., AIAA Tech. Information Service A67-30445, December 20, 1966.

37. Frumkin, B.: Maintainability on the Lunar Excursion Module. Grumman Aircraft Engineering Corp., AIAA Tech. Information Service A66-37962, No Date.

38. Haines, J. F.; Woodford, A. T.; Abbott, B.; et. al.: Boom Attachment System. DeHavilland Aircraft of Canada Lmt., Tech. Report AFAPL-TR-67-14, August 19, 1967.

39. Hibben, R. D.: U.S.A.F. Studying Space Tool Development. Aviation Week and Space Technology, September 13, 1965, pp. 50-79.

40. Holmes, A. E.; and Hamilton, L.: A Space Tool Kit Development Program. National Conference on Space Maintenance and Extra-Vehicular Activities, Martin Company, March 1-3, 1966.

41. Holmes, A. E.: Space Tool Kit, Survey Development and Evaluation Program. Final Report, Martin Company, 1965.

42. Iribe, P.; and Lieske, J. A.: Study of EVA Protection and Operations. Johns Hopkins University, June 1967.

43. Johnson, L. B.: Experimental and Engineering Research Studies on Tools for Extravehicular Maintenance in Space. Second National Conference on Space Maintenance and on Extravehicular Activities, August 6-8, 1968.

44. Johnson, L. B.: A Review of Maintenance Performance Decrements Resulting from Weightlessness and Pressure Suit Conditions. Phase I Report, Raff Analytic Study Associates, Inc., Report No. 66-23, February 27, 1967.

45. Johnson, L. B.; and Havener, P. W.: Experimental Research Studies on Tools for Extravehicular Maintenance in Space. Raff Analytic Study Associates, Report 67-9, NASA CR-91052, August 31, 1967.

46. Johnson, L. B.; Havener, P. W.; Raff, S. J.; and Wilcomb, E. R.: Future Manned Space Flights. Raff Analytic Study Associates, Inc., RASA 66-247, NASA CR-85556, March 27, 1967.

47. Jones, K. C.: Engineering Design Criteria for Lunar Scientific Equipment. Hamilton Standard, NAS8-20095, January 15, 1967.

48. Jones, R. A.; and Sievert, G. H.: Exothermic Space Bonding System. Air Force Aero Propulsion Lab, Research and Technology Division, Wright-Patterson AFB, AFAPL-TR-66-63, August 1966.

49. Kohn, M. L.: Materials Joining Tool. Air Force Aero Propulsion Lab, United Aircraft Corp., Hamilton Standard Division, AFAPL-TR-68-60, May 1968.

50. Kohn, M.; and Silha, C. W., 1/Lt., USAF: Cold Cathode Welding for Space Applications. Second National Conference on Space Maintenance and Extravehicular Activities, AFAPL, NASA 6-8, August 1968.

51. Kubokawa, C. C.: Space Tool State-of-the-Art and Considerations for Future Space Tool Equipment Design. Joint National Meeting, American Astronautical Society - Operations Research Society, Denver, Colorado, June 17-20, 1969.

52. Lawrence, G. S.; and Schollhammer, F. R.: Final Report on Hand-Held Electron Beam Gun and External Power Supply. Hamilton Standard EBR 199, October 1966.

53. Loats, H. L., Jr.; Mattingly, G. S.; and Hay, G. M.: Correlation Study of the Simulation of Gemini EVA Activity with Flight Results. Environmental Research Associates, Langley Research Center, NASA, NASA CR-1146, February 1969.

54. May, C. B.: Maintenance in a Weightless Environment, AFAPL Wright-Patterson Air Force Base, AIAA Tech. Information Service A65-22250, April 1965.

55. May, C. B.; Schofield, J. N., Capt.; and Vorst, L. A.: AF-Gemini Space Maintenance Experiment and Simulation. National Conference on Space Maintenance and Extravehicular Activities, March 1-3, 1966.

56. Pecorado, F. R.: Operation and Maintenance Instructions. MSFC, Contract No. NAS 8-20796, December 1967.

57. Peters, G. H.; Shafer, R. J.; and Hanny, J. F.: Extravehicular Capsular Adhesive Systems. National Conference on Space Maintenance and Extravehicular Activities, AF33(615)-2693, March 1-3, 1966.

58. Peters, G.; Whitaker, J.; and Hanny, J.: Extravehicular Space Adhesive System. National Cash Register Co., Report AFAPL-TR-66-59, August 1966.

59. Peterson, C. R.; and Rochon, R.: Aero-Space Expandable Structures in Maintenance Support Devices, Vol. 11, Evaluation of Adhesive System for Anchoring Astronauts to a Worksite in Space. Archer Daniels Midland Co., Vol. 11, AFAPL-TR-65-10, July 1965.

60. Rader, P. J.: Variable Flexibility Tether System. AFAPL, AFAPL-TR-68-19, June 1968.

61. Schollhammer, F. R.: Electron Beam Welding for In-Space Assembly and Maintenance. National Conference on Space Maintenance and Extravehicular Activities, March 1-3, 1966.

62. Schollhammer, F. R.: Electron Beam Welding in Variable Environments. Hamilton Standard, United Aircraft Corp., October 15, 1963 to January 14, 1964.

63. Seale, L. M.: EVA Space Missions - An Overview of the Requirements. National Conference on Space Maintenance and Extravehicular Activities, March 1-3, 1966.

64. Seale, L. M.: Study of Space Maintenance Techniques. Bell Aero Systems Co., Aero Space Rockets Division, May 1963.

65. Seeman, J. S.; Smith, F. H.; and Mueller, D. D., Capt.: Preliminary Investigation of Space Maintenance. George C. Marshall Space Flight Center, NASA TM X-53246, June 1966.

66. Seeman, J. S.; Smith, F. H.; and Mueller, D. D., Capt.: A Technique to Investigate Space Maintenance Tasks. Wright-Patterson Air Force Base, AMRL-TR-66-32, April 1966.

67. Tillotson, R. W.: Apollo Command Module Stabilization and Control System Subcontractor Interim SCS, In-flight Analysis. Honeywell, Inc., Aeronautical Division, June 20, 1964.

68. Van Schaik, Peter: Latest Developments for EVA Space Operations. AFAPL, October 1968.

69. Wilson, W. A.: Multipurpose Space Tool Evaluation. NASA, Marshall Space Flight Center, MDM-5-68, April 1, 1968.

70. Wuenscher, H. F.: Low and Zero G Manufacturing in Orbit. NASA, Marshall Space Flight Center, October 23-27, 1967.

71. Yost, V. H.: The Martin/Black and Decker Space Tool System Evaluation. Final Report, NASA, Marshall Space Flight Center, Manufacturing Research and Technology Division, Manufacturing Engineering Lab, NASA TM X-53605, May 1967.

72. Yost, V. H.; and McBride, W. S.: Multipurpose Tool Concept Interim Report. NASA, Marshall Space Flight Center, MDM-1-67, February 1, 1967.

APPENDIX A

Tool/Bibliographic Key

Below is a list of the tools included in this catalog. The tools are arranged according to their order of appearance in the catalog and are grouped according to their functional categories. After each tool there is a list of bibliography numbers that correspond to entries in the Bibliography that provided information on that tool. For those tools for which information was obtained solely through personal communication the bibliography numbers are replaced by the phrase: personal communications.

Functional Category/Tool Entry	Bibliography Numbers
1.0 Bonding and Electroadhesor Tools and Maintenance Equipment	
1.1 Exothermic Space Bonding System	39, 48
1.2 Extravehicular Space Adhesive System	57, 58, 59
1.3 Flexible Prototype (Single Pole) Electroadhesor	68
1.4 Hand Model Prototype (Single Pole) Electroadhesor	68
1.5 Hand Model Prototype (Two Pole) Electroadhesor	68
1.6 Restraint Buttons and Applicator	17, 40, 41, 42, 71
1.7 Stud Bonding Tool	15
2.0 Cutting Tools	
2.1 Power Drill	17, 40, 41, 42, 71
2.2 Power Saw	17, 40, 41, 42, 71
2.3 S-IVB Window Emplacement Tool Kit	25
2.4 Window Saw Cutting Tool	6
3.0 Hammers	
3.1 Dead Blow Hammer	18, 40, 41, 42, 71
3.2 Winchester Space Tool	personal communications
4.0 Illumination Equipment	
4.1 Work Lights	17, 40, 41, 42, 71
5.0 Gas Leak, Pressure Detection and Measurement Tools and Equipment	
5.1 Mass Flowmeter	personal communications
5.2 Pilot Model Leak Detector	11, 12

6.0 Lunar Sampling and Surveying Tools

6.1 Apollo Lunar Surface Drill (ALSD) System. . . . 10, 27, 28

6.2 Color Chart 26, 29, 47

6.3 Hand Lens 26, 29, 47

6.4 Jacob Staff 26, 29, 47

6.5 Modified Abney Level. 26, 29, 47

6.6 Multipurpose Geological Hammer. 26, 29, 47

6.7 Multipurpose Scoop 26, 29, 47

6.8 Orthogonal Clinometer and Sun Gnomon. 26, 29, 47

6.9 Powered Lunar Geologist Tool (PLGT) 26, 29, 47

6.10 Sample Retriever. 26, 29, 47

6.11 Sample Stowage Bag. 26, 29, 47

6.12 Sample Weighing Device. 26, 29, 47

7.0 Orientation and Restraint Tools and Maintenance Equipment

7.1 Astronaut Boom Attachment System. 38

7.2 Extendable Boom 19

7.3 KUPU Latch. 51

7.4 Lanyard System. . . . . personal communications

7.5 Martin Space Tool Kit Case. 18, 40, 41, 42, 71

7.6 Positioning Tool (Maintenance Tether System). 14

7.7 Reversible Geological Tool Container. 26, 29, 47

7.8 Rigid Rope 17, 41

7.9 Serpentuator (Serpentine Actuator). 63, 70

7.10 Small Parts Holder. 17, 40, 41, 42, 71

7.11 Small Parts Manipulator (Fingernail). . 17, 40, 41, 42, 71

7.12 Tool Box. 64, 65, 66

7.13 Tool Cuff System. 13, 43, 44, 45, 46

7.14 Variable Flexibility Tether System 60

7.15 Zero Gravity Surface and Interlocking Structure . . . . . personal communications

8.0 Tools Maintaining Electrical and Electronic Equipment

8.1 Coaxial Cable Cutter. . . . . personal communications

8.2 Multipurpose Hand Wiring Tool 33, 39

8.3 Program Control Card Extractor System 3

9.0 Tool Kits and Tool Sets

9.1 Crewman In-Flight Tool Set. . personal communications, 3, 53

9.2 Martin Space Tool Kit 17, 40, 41, 42, 71

9.3 Prototype Lunar Geological Tool Kit 26, 29, 32

10.0 Screwdriving and Torqueing Tools

10.1 Aero Jet Bolt Removal Tool (BRT). 56

10.2 Apollo Adjustable End Wrench. . . . . personal communications

10.3 Apollo In-Flight Maintenance Tool 2, 59, 67

10.4 Apollo T-Handle . . . . . personal communications

10.5 Apollo Torque Wrench. . . . . personal communications, 1, 53

10.6 Boeing Torque Cancelling Tool . . . . personal communications

10.7 Bolt Installation and Removal Tool (BIRT) 9, 22

10.8 Inertia Wheel 69

10.9 Motor/Handle Assembly 17, 40, 41, 42, 71

10.10 Nut and Bolt Wrench (NAB) 19, 63

10.11 Open End Flat Ratchet Wrench. 21

10.12 Pliers-Wrench (PLENCH). 19, 20, 37

10.13 Power Impact Wrench 17, 40, 41, 42, 71

10.14 Ratchet Hand Tool 30, 53

10.15 Screwdriver Ratchet Handle. 17, 40, 41, 42, 71

10.16 Space Power Tool System . 16, 20, 30, 31, 32, 34, 35, 53, 54, 55
10.17 Space Tool Mitten 13, 43, 44, 45, 46
10.18 Spin Torque Space Tool 13
10.19 Spiral Drive Screwdriver . . . . . .personal communications
10.20 T-Handle Multi-Functional Tool 72
10.21 Zero Reaction Space Wrench 36, 38, 39, 63

11.0 Tube Connection Tools
11.1 Semi-Remote Spunfit Wrench (Space Union and Fitting) 19
11.2 Spunfit Wrench (Space Union and Fitting) 19, 20
11.3 Tube Swaging Device . . . . . .personal communications

12.0 Welders
12.1 Hand-Held, Electron-Beam Welder 35, 52, 61, 62
12.2 Materials Joining Tool 49, 50
12.3 Plasma Electron-Beam Welder 23
12.4 Portable Electron-Beam Welder (0.5 KW) 61
12.5 Westinghouse Electron-Beam Welder 4

APPENDIX B

Space Equipment and Tool Matrix: Related Functional Categories and Source of Power

The tool entry for each tool in the catalog is located in that functional category to which its most important or primary functional capacity corresponds. However, many of the tools have secondary capabilities that correspond to other functional categories. The tables on the following pages indicate those functional categories for each tool. Therefore, these tables permit a catalog user who is interested in tools with capabilities corresponding to a particular functional category to locate tools that may be of interest to him but whose entries are not located in that category in the catalog.

The power source, whether manual or power is also indicated for each tool. Powered tools are also described as either internal or external. That is, internal (tool component) powered tools have an enclosed battery or cartridge for activation. On the other hand, external sources of power would indicate an electrical or air source that is not considered a component of the tool or maintenance equipment.

Tool Names	Related Functional Categories												Power Source		
	BONDELECTAD & MAINTEQUIP	CUTTING TOOLS	HAMMERS	ILLUM-EQUIP	G-LEAK-PRESS DETEC & MEAS	LUN-SAMP & SURV-TOOLS	O&R TOOLS & MAINTEQUIP	TOOL-ELEC & ELEC-EQUIP	KITS&SETS	SCREW&TORQUE TOOLS	TUBE-CONNEC TOOLS	WELDERS	Manual	Powered	
														Internal Source	External Source
BONDELECTAD & MAINTEQUIP															
Exothermic Space Bonding System							X							X	
Extravehicular Space Adhesive System							X						X		
Flexible Electroadhesor							X							X	
Single Pole Electroadhesor							X							X	
Two Pole Electroadhesor							X							X	
Restraint Buttons end Applicator							X								X
Stud Bonding Tool							X								X
CUTTING TOOLS															
Power Drill															X
Power Saw															X

Tool Names	Related Functional Categories												Power Source		
	BONDELECTAD & MAINTEQUIP	CUTTING TOOLS	HAMMERS	ILLUM-EQUIP	G-LEAK-PRESS DETEC & MEAS	LUN-SAMP & SURV-TOOLS	O&R TOOLS & MAINTEQUIP	TOOL-ELEC & ELEC-EQUIP	KITS&SETS	SCREW&TORQUE TOOLS	TUBE-CONNEC TOOLS	WELDERS	Manual	Powered	
														Internal Source	External Source
S-IVB Window Emplacement Tool Kit														X	
Window Saw Cutting														X	
HAMMERS															
Dead Blow Hammer													X		
Winchester Space Tool		X												X	
ILLUM-EQUIP															
Work Lights															X
G-LEAK-PRESS, DETEC & MEAS															
Pilot Model Leak Detector														X	
Mass Flowmeter														X	

Tool Names	Related Functional Categories												Power Source		
	BONDELECTAD & MAINTEQUIP	CUTTING TOOLS	HAMMERS	ILLUM-EQUIP	G-LEAK-PRESS DETEC & MEAS	LUN-SAMP & SURV-TOOLS	O&R TOOLS & MAINTEQUIP	TOOL-ELEC & ELEC-EQUIP	KITS&SETS	SCREW&TORQUE TOOLS	TUBE-CONNEC TOOLS	WELDERS	Manual	Powered	
														Internal Source	External Source
LUN-SAMP & SURV-TOOLS															
Apollo Lunar Surface Drill (ALSD) System		X	X											X	
Color Chart													X		
Hand Lens													X		
Jacob Staff							X						X		
Modified Abney Level													X		
Multipurpose Geological Hammer		X	X										X		
Multipurpose Scoop		X											X		
Orthogonal Clinometer and Sun Gnomon													X		
Powered Lunar Geologist Tool (PLGT)		X	X											X	
Sample Retriever							X						X		

Tool Names	Related Functional Categories												Power Source		
	BONDELECTAD & MAINTEQUIP	CUTTING TOOLS	HAMMERS	ILLUM-EQUIP	G-LEAK-PRESS DETEC & MEAS	LUN-SAMP & SURV-TOOLS	O&R TOOLS & MAINTEQUIP	TOOL-ELEC & ELEC-EQUIP	KITS&SETS	SCREW&TORQUE TOOLS	TUBE-CONNEC TOOLS	WELDERS	Manual	Powered	
														Internal Source	External Source
Sample Storage Bag							X						X		
Sample Weighing Device													X		
O&R TOOLS & MAINTEQUIP															
Astronaut Boom Attachment System													X		
Extendable Boom													X		
KUPU Latch													X		
Lanyard System													X		
Martin Space Tool Kit Case													X		
Positioning Tool (Maint Tether System)													X		
Reversible Geological Tool Container						X							X		
Rigid Rope													X		

Tool Names	Related Functional Categories												Power Source		
	BONDELECTAD & MAINTEQUIP	CUTTING TOOLS	HAMMERS	ILLUM-EQUIP	G-LEAK-PRESS DETEC & MEAS	LUN-SAMP & SURV-TOOLS	O&R TOOLS & MAINTEQUIP	TOOL-ELEC & ELEC-EQUIP	KITS&SETS	SCREW&TORQUE TOOLS	TUBE-CONNEC TOOLS	WELDERS	Manual	Powered	
														Internal Source	External Source
Small Parts Holder													X		
Small Parts Manipulator (Fingernail)													X		
Serpentuator (Serpentine Actuator)													X		
Tool Box													X		
Tool Cuff System													X		
Variable Flexibility Tether System													X		
Zero Gravity Surface and Interlocking													X		
TOOL-ELEC & ELEC-EQUIP															
Coaxial Cable Cutter		X											X		
Multipurpose Hand Wiring Tool		X											X		
Program Control Card Extractor Sys.							X						X		

Tool Names	Related Functional Categories												Power Source		
	BONDELECTAD & MAINTEQUIP	CUTTING TOOLS	HAMMERS	ILLUM-EQUIP	G-LEAK-PRESS DETEC & MEAS	LUN-SAMP & SURV-TOOLS	O&R TOOLS & MAINTEQUIP	TOOL-ELEC & ELEC-EQUIP	KITS&SETS	SCREW&TORQUE TOOLS	TUBE-CONNEC TOOLS	WELDERS	Manual	Powered	
														Internal Source	External Source
KITS&SETS															
Crewman In-Flight Tool Set							X	X		X			X		
Martin Space Tool Kit	X	X	X	X			X			X			X	X	
Prototype Lunar Geological Tool Kit		X	X			X	X						X	X	
SCREW&TORQUE TOOLS															
Aero Jet Bolt Removal Tool (BRT)															X
Apollo Adjustable End Wrench													X		
Apollo In-Flight Maint Tool							X	X					X		
Apollo T-Handle							X	X					X		
Apollo Torque Wrench													X		
Bolt Installation and Removal Tool															X

Tool Names	Related Functional Categories												Power Source		
	BONDELECTAD & MAINTEQUIP	CUTTING TOOLS	HAMMERS	ILLUM-EQUIP	G-LEAK-PRESS DETEC & MEAS	LUN-SAMP & SURV-TOOLS	O&R TOOLS & MAINTEQUIP	TOOL-ELEC & ELEC-EQUIP	KITS&SETS	SCREW&TORQUE TOOLS	TUBE-CONNEC TOOLS	WELDERS	Manual	Powered	
														Internal Source	External Source
Boeing Torque Cancelling Tool													X		
Inertia Wheel													X		
Motor/Handle Assembly		X													X
Nut and Bolt Wrench (NAB)													X		
Open End Flat Ratchet Wrench													X		
Pliers-Wrench (PLENCH)													X		
Power Impact Wrench															X
Ratchet Hand Tool													X		
Screwdriver Ratchet Handle	X												X		
Space Power Tool System				X										X	
Space Tool Mitten														X	

Tool Names	Related Functional Categories												Power Source		
	BONDELECTAD & MAINTEQUIP	CUTTING TOOLS	HAMMERS	ILLUM-EQUIP	G-LEAK-PRESS DETEC & MEAS	LUN-SAMP & SURV-TOOLS	O&R TOOLS & MAINTEQUIP	TOOL-ELEC & ELEC-EQUIP	KITS&SETS	SCREW&TORQUE TOOLS	TUBE-CONNEC TOOLS	WELDERS	Manual	Powered	
														Internal Source	External Source
Spin Torque Space Tool														X	
Spiral Drive Screwdriver													X		
T-Handle Multi-Functional Tool													X		
Zero Reaction Space Wrench													X		
TUBE-CONNEC TOOLS															
Semi-Remote Spunfit Wrench										X			X		
Spunfit Wrench										X			X		
Tube Swaging Device														X	
WELDERS															
Hand-Held, Electron-Beam Welder															X
Materials Joining Tool											X				X

Tool Names	Related Functional Categories											Power Source		
	WELDERS	TUBE-CONNEC TOOLS	SCREW&TORQUE TOOLS	KITS&SETS	TOOL-ELEC & ELEC-EQUIP	O&R TOOLS & MAINTEQUIP	LUN-SAMP & SURV-TOOLS	G-LEAK-PRESS DETEC & MEAS	ILLUM-EQUIP	HAMMERS	CUTTING TOOLS	BONDELECTAD & MAINTEQUIP	Manual	Powered: Internal Source	Powered: External Source
Plasma Electron-Beam Welder														X	
Portable Electron-Beam Welder (0.5 KW)														X	
Westinghouse Electron-Beam Welder														X	X

APPENDIX C

Key Individuals in Space Tool and Maintenance Operations

Mr. B. Abbot
Special Products and
Applied Research Division
Dehavilland Aircraft of Canada, Ltd.
Malton, Ontario

Astronaut Boom
Attachment System

Mr. Robert Avery
R-ME-ME
National Aeronautics and
Space Administration
Marshall Space Flight Center
Huntsville, Alabama 35812

Mr. B. H. Baisley
Kelleth Aircraft Corporation
P. O. Box 35
Willow Grove, Pennsylvania 19090

Mr. Paul Baker, Jr., Col., USAF
Chief, Technology Division
Directorate of Space, DCS/R&D
Department of the Air Force
Headquarters USAF
Washington, D. C.

Mr. D. A. Barnes
Advance Systems & Technology
Douglas Missile & Space Systems Division
McDonnell Douglas Corporation
Huntington Beach, California

Mr. J. Belknap
Boeing Company
Aerospace Group
Seattle, Washington

Boeing Torque
Cancelling Tool

Mr. Larry E. Bell
National Aeronautics and
Space Administration
Manned Spacecraft Center
Houston, Texas 77058

Mr. A. Bienart Hayes International Marshall Space Flight Center Huntsville, Alabama 35812	Spin Torque Space Tool
Mr. Richard Blackmer Building 28, 115-B General Electric Schenectady, New York 12305	
Mr. Herman Blaise National Aeronautics and Space Administration Marshall Space Flight Center Huntsville, Alabama 35812	Aero Jet Bolt Removal Tool, Bolt Installation and Removal Tool, Serpentuator
Mr. K. L. Boring Research and Development General Electric Co. Schenectady, New York	Plasma Electron Beam Welder
Mr. William Boyce Missiles and Space Division LTV Aerospace Corporation P. O. Box 6267 Dallas, Texas 75222	PLENCH
Mr. Leo Bricker Life Science Group Leader Grumman Aircraft Engineering Corp. Bethpage Long Island, New York	
Mr. Edwin Brown R-ME-MM National Aeronautics and Space Administration Marshall Space Flight Center Huntsville, Alabama 35812	Positioning Tool (Maintenance Tether System)
Dr. George W. Brooks Asst. Director National Aeronautics and Space Administration Langley Research Center Langley Air Force Base, Virginia	Zero Gravity Surface and Interlocking Structure

Mr. T. M. Broxholm
Quantic Industries
P. O. Box 35
Willow Grove, Pennsylvania 19090

Mr. J. Burridge
United Aircraft
Hamilton Standard Division
Windsor Locks, Connecticut

Mr. J. Carpenter
Hanover Industrial Machine Co.
Hanover, Pennsylvania

Mr. J. J. Casserly
Supervisor, Program Administration
Honeywell Inc. (Military Products Inc.)
Aeronautical Division
2600 Ridgeway Road
Minneapolis, Minnesota 55413

Mr. Robert G. Clodfelter
Site Support Branch
Support Technology Division
Department of the Air Force
U. S. Air Force Aero Propulsion Lab
Wright-Patterson AFB, Ohio 45433

Mr. Ed Coleman
Hayes International
Marshall Space Flight Center
Huntsville, Alabama 35812

S-IVB Window Emplacement Tool, Positioning Tool (Maintenance Tether System)

Mr. L. G. Crane
Quantic Industries
P. O. Box 35
Willow Grove, Pennsylvania

Mr. Donald S. Crouch
Martin Company
Martin Marietta Corporation
Baltimore, Maryland 21203

Mr. Floyd K. Daisey
Martin Company
Martin Marietta Corporation
Baltimore, Maryland 21203

Prototype Lunar Geological Tool Kit, Space Power Tool System, Space Power Tool #1A, #2A, and #3A

Mr. Dan Dane
ME-MS
National Aeronautics and
Space Administration
Marshall Space Flight Center
Huntsville, Alabama 35812

Mr. J. L. Decker
Martin Company
Baltimore, Maryland 21203

Prototype Geological Tool Kit

Mr. D. DeMarino
Grumman Support Department
Grumman Aircraft Corporation
Bethpage, Long Island, New York

Dr. Stanley Deutsch
Chief, Man-System Integration Br. (RBM)
Biotechnology and Human Research Div.
Office of Advance Research and Technology
National Aeronautics and Space Administration
Washington, D. C. 20546

Mr. T. M. Dickinson
Research & Development Center
General Electric Co.
Schenectady, New York

Plasma Electron Beam Welder

Mr. R. F. Donovan
Hamilton Standard
Windsor Locks, Connecticut

Hand-Held, Electron-Beam Gun

Mr. Isaac Edmonds
Mechanical Engineering Laboratory
National Aeronautics and
Space Administration
Marshall Space Flight Center
Huntsville, Alabama 35812

Spin Torque Space Tool

Mr. J. Edwards
Douglas Aircraft Co.
3855 Lakewood Boulevard
Long Beach, California 90801

Mr. L. C. Elmore
General Manager
Advanced Weapons Division
Quantic Industries, Inc.
1011 Commercial Street
San Carlos, California 94070

Capt. Fred H. Ernst
Air University
United States Air Force
Wright-Patterson AFB, Ohio

Mr. Thomas Fagan
General Electric
Philadelphia, Pennsylvania

Mr. H. P. Farth
Republic Aviation Division
Fairchild Hiller Corporation
Farmingdale, Long Island, New York

Mr. J. K. Figenshav
General Mills, Inc.
Route 2, Box 66
Big Lake, Minnesota 55309

Mr. G. L. Fogal, Manager
IMBLMS Engineering
Room 8301, CC&F #8
P. O. Box 8555
Philadelphia, Pennsylvania

Mrs. Anne Folsom
Quality Control
National Aeronautics and
Space Administration
Manned Spacecraft Center
Houston, Texas 77058

Mr. Fred W. Forbes
Support Technology Division
Aero Propulsion Lab
Wright-Patterson AFB, Ohio

Mr. J. Foster
AAI Corporation
Cockeysville, Maryland 21030

Window Saw Cutting Tool

Mr. L. D. Foster
National Aeronautics and
Space Administration
Marshall Space Flight Center
Huntsville, Alabama

Mr. H. E. Freeman
Missiles and Space Division
LTV Aerospace Corporation
P. O. Box 6267
Dallas, Texas 75222

Mr. Harold Frochlich
General Mills, Inc.
Route 2, Box 66
Big Lake, Minnesota 55309

Mr. R. H. Gablehouse
Director, Aerospace Programs
Ball Brothers Research Corp.
P. O. Box 1062
Boulder, Colorado 20302

Mr. L. M. Gee
Quantic Industries
P. O. Box 35
Willow Grove, Pennsylvania 19090

Mr. Edward Goodrich
Boeing Company
P. O. Box 3868
Space Division, Kent Facility
Seattle, Washington 98124

Mr. E. A. Gregg
North American Aviation, Inc.
2214 Lakewood Boulevard
Downey, California 90241

Mr. Forrest Grimm
General Mills, Inc.
Route 2, Box 66
Big Lake, Minnesota

Mr. J. F. Haines
Special Products and
Applied Research Division
Dehavilland Aircraft of Canada, Ltd.
Malton, Ontario

Astronaut Boom
Attachment System

Mr. J. D. Halajian
Grumman Research Department
Grumman Aircraft Engineering Corp.
Bethpage, Long Island, New York

Mr. H. C. Hatch
Defense Space Group
Chrysler Corporation
1700 K Street, N. W.
Washington, D. C.

Mr. Charles A. Headley
McDonnell Aircraft Corporation
Manned Spacecraft Center
Houston, Texas 77058

Mrs. Roxanna Headley
McDonnell Aircraft Corporation
Manned Spacecraft Center
Houston, Texas 77058

Mr. T. C. Helvey
Research Projects Lab
National Aeronautics and
Space Administration
Marshall Space Flight Center
Huntsville, Alabama 35812

Mr. J. Herman
United States Air Force
Wright-Patterson AFB, Ohio 45433

Mr. Allen E. Holmes
Martin Company
Baltimore, Maryland

Space Power Tool

Mr. Theodore W. Holsten
Honeywell, Incorporated
Aeronautical Division
2600 Ridgway Road
Minneapolis, Minnesota 55413

Mr. A. Interian
Space Systems Organization
General Electric Company
Valley Forge, Pennsylvania

Mr. Charles Irvine
R-ME-MM
National Aeronautics and
Space Administration
Marshall Space Flight Center
Huntsville, Alabama 35812

S-IVB Window Emplacement Tool Kit

Mr. John Jackson
National Aeronautics and
Space Administration
Manned Spacecraft Center c/o EC6
Houston, Texas 77058

Dr. Lawrence B. Johnson
Raff Associates, Inc.
912 Thayer Avenue
Silver Spring, Maryland 20910

Space Tool Mitten and Tool Cuff

Mr. Donald D. Jones
McDonnell Aircraft Corporation
Manned Spacecraft Center
Houston, Texas 77058

Mr. Rodney A. Jones
Normco Research &
Development Corporation
Whittaker Corporation
San Diego, California

Exothermic Space
Bonding System

Mr. John Kandler
Applied Technology Branch
National Aeronautics and
Space Administration
Marshall Space Flight Center
Huntsville, Alabama 35812

Mr. T. G. Keeton
Westinghouse Electric Corp.
Elmira, New York

Mr. Martin L. Kohn
Hamilton Standard
Windsor Locks, Connecticut

Mr. Joseph Kosmo
Crew Systems Division
National Aeronautics and
Space Administration
Manned Spacecraft Center
Houston, Texas 77058

Mr. Richard P. Krape
Chrysler Corporation
Space Division
New Orleans, Louisiana

Hand Model Prototype
(two-pole) Electro-
adhesor, Flexible Proto-
type (single-pole)
electroadhesor, Hand
Model Prototype (single-
pole) Electroadhesor

Mr. Charles C. Kubokawa
Head, Human Factors Group
National Aeronautics and Space Administration
Manned-Machine Integration Branch
Ames Research Center
Moffett Field, California 94035

KUPU Latch

Mr. Paul Kurbjun
Technical Utilization Office
National Aeronautics and
Space Administration
Langley Research Center
Hampton, Virginia 23365

Mr. G. Lawrence
Hamilton Standard
Windsor Locks, Connecticut

Hand-Held, Electron-Beam Gun

Mr. John A Lea
Application Engineer
SPAR
Box 6022, Toronto International Airport
Ontario, Canada

Mr. Stanley M. Lebow
Raff Associates, Inc.
912 Thayer Avenue
Silver Spring, Maryland

Mr. Basil Leftheris
582 Plant 35
Grumman Aircraft Engineer Corp.
Research Department
Bethpage, Long Island, New York 11714

Mr. M. A. Lifset, Manager
Advanced Program Support
P. O. Box 8555
Philadelphia, Pennsylvania 19101

Mr. Harry Loats
Environmental Research Associates
P. O. Box 454
Randallstown, Maryland 21133

Mr. W. Lundy
Kelleth Aircraft Corporation
P. O. Box 35
Willow Grove, Pennsylvania 19090

Mr. G. Samuel Mattingly
Environmental Research Associates
P. O. Box 454
Randallstown, Maryland 21133

Mr. Chester May
National Aeronautics and
Space Administration
Marshall Space Flight Center
Huntsville, Alabama 35812

Space Power Tool

Mr. Clifton M. McClure
Hayes International
Marshall Space Flight Center
Huntsville, Alabama 35812

Mr. Richard McComb
Project Manager
National Aeronautics and
Space Administration
Manned Spacecraft Center
Houston, Texas 77058

Apollo Lunar Surface
Drill

Mr. W. McMurray
Research & Development Center
General Electric Co.
Schenectady, New York

Plasma Electron Beam
Welder

Mr. Dwight McSmith
National Aeronautics and
Space Administration
Langley Research Center
Hampton, Virginia 23365

Mr. Gerald Miller
General Electric Co.
Spacecraft Program
P. O. Box 8555
Philadelphia, Pennsylvania 19101

Variable Flexibility
Tether System

Mr. M. M. Miller
Director, Administration Services
Douglas Missile & Space Systems Div.
McDonnell Douglas Corporation
Huntington Beach, California

Mr. A. U. Millett
North American Aviation Inc.
Missile Division
Downey, California

Mr. Leo Mizen, Proj. Engineer
Cornell Aeronautical Lab
P. O. Box 235
Buffalo, New York 14221

Mr. J. Moulton
Quantic Industries
P. O. Box 35
Willow Grove, Pennsylvania 19090

Capt. Donald D. Mueller — Tool Box
Propulsion & Vehicle Engineer Lab
National Aeronautics and
Space Administration
Marshall Space Flight Center
Huntsville, Alabama 35812

Mr. Miles Murphy — Space Tool Mitten and Tool Cuff
Man-Machine Integration Branch
National Aeronautics and
Space Administration
Ames Research Center
Moffett Field, California 94035

Mr. G. Nash
2600 Skipark Drive
Torrance, California 90509

Mr. Donald Norman
General Electric Co.
Spacecraft Programs
P.O. Box 8555
Philadelphia, Pennsylvania 19101

Mr. M. A. Novice
Westinghouse Electric Corp.
Elmira, New York

Mr. G. H. Ochenrider
Grumman Aircraft Engineering Corp.
Bethpage, Long Island, New York

Mr. Fred W. Oliver
AFAPL, APFH
Wright-Patterson AFB, Ohio 45433

Mr. Olif Olsen
Hamilton Standard Division
United Aircraft Corp.
Windsor Locks, Connecticut 06906

Mr. D. Palzell
Dehavilland Aircraft of Canada Ltd.
Grumman Aircraft Engineering Corp.
Bethpage, Long Island, New York 11714

Mr. G. Peters
National Cash Register Co.
Dayton, Ohio 45409

Extravehicular Space Adhesive System

Mr. G. Pfanner, Chief Mfg.
Research & Processes
Republic Aviation Division
Fairchild Hiller Corp.
Farmington, Long Island, New York

Mr. K. Poll
Emerson Electric Company
8100 Florissant
St. Louis, Missouri 63136

Mr. P. J. Rader
Missile & Space Division
of the General Electric Co.
Philadelphia, Pennsylvania

Variable Flexibility Tether System

Dr. Samuel J. Raff
Raff Associates, Inc.
912 Thayer Avenue
Silver Spring, Maryland 20910

Space Tool Mitten and Tool Cuff

Mr. M. B. Rodin
Office of Industrial Cooperation
Argonne National Lab
9700 South Cass Avenue
Argonne, Illinois 60439

Mr. T. L. Rogers
Space Division of North American
Rockwell Corporation
12214 Lakewood Boulevard
Downey, California

Mr. Gilbert Rolan
American Machine and
Foundry Company
261 Madison Avenue
New York, New York 10016

Spunfit Wrench, Semi-
Removal Spunfit Wrench

Mr. Rudolph Rusnak
c/o DB4
National Aeronautics and
Space Administration
Manned Spacecraft Center
Houston, Texas 11058

Mr. Eric Sander
Raff Associates, Inc.
912 Thayer Avenue
Silver Spring, Maryland 20910

Mr. F. R. Schollhammer
Chief - Research & Development
Industrial Products Department
Hamilton Standard
Division of United Aircraft Corp.
Windsor Locks, Connecticut 06096

Hand-Held, Electron-
Beam Gun, 0.5 KW Elec-
tron-Beam Welder

Mr. Robert A. Schoppman
McDonnell Aircraft Corporation
Manned Spacecraft Center
Houston, Texas 77058

Mr. D. C. Schultz
Chief, EVA Procedure Section
National Aeronautics and
Space Administration
Manned Spacecraft Center
Houston, Texas 77058

Mr. M. M. Schuster
Hi-Shear Corporation
2600 Skypark Drive
Torrance, California 90509

Mr. R. J. Schwinghammer
National Aeronautics and
Space Administration
Marshall Space Flight Center
Huntsville, Alabama 35812

Mr. J. J. Severin
North American Aviation, Inc.
Missile Division
Downey, California

Mr. Glenn H. Sievert
Narmco Research & Development Corp.
Whittaker Corporation
San Diego, California

Exothermic Space
Bonding System

1st Lt. Carlan W. Silha
Air Force Aero Propulsion Lab
APFT
United States Air Force
Wright-Patterson AFB, Ohio 45433

Mr. William G. Simpson
R-ME-MM
National Aeronautics and
Space Administration
Marshall Space Flight Center
Huntsville, Alabama 35812

Stud Bonding Tool

Mr. Roy B. Smith
Air University
Wright-Patterson AFB, Ohio

Mr. Joe Spencer
Martin Marietta Corporation
Systems Research Department
P. O. Box 179
Denver, Colorado 80201

Mr. William Spindell
Human Factors and Life Sciences Dept.
TRW Systems
One Space Park
Redondo Beach, California 90278

Mr. Z. Srepesi
Westinghouse Electric Corp.
Elmira, New York

Mr. Robert W. Struble
Project Engineer
Kelleth Aircraft Corp.
P. O. Box 35
Willow Grove, Pennsylvania 19090

Mr. H. T. Stucker
General Dynamics, FWD
Fort Worth, Texas 76101

Mr. Herbert V. Swanigan — Lanyard Tools
Missiles & Space Systems Div.
Space Systems Center
5301 Bolsa Avenue
Huntington, California 92647

Major Peter N. Van Schaik
Air Force Aero Propulsion Lab
Space Maintenance and Maneuvering
United States Air Force
Wright-Patterson AFB, Ohio

Mr. H. L. Tash
National Aeronautics and
Space Administration
Manned Spacecraft Center
Houston, Texas 77058

Mr. Franklin E. Thompson
National Aeronautics and
Space Administration
Ames Research Center
Moffett Field, California 94035

Coaxial Cable Cutter

Mr. R. W. Tillotson
Honeywell, Inc.
Military Products Group
Aeronautical Division
2600 Ridgeway Road
Minneapolis, Minnesota 55413

Apollo In-Flight
Maintenance Tool

Mr. J. C. Trimm
Quantic Industries
P. O. Box 35
Willow Grove, Pennsylvania 19090

Mr. Otto F. Trout, Jr.
National Aeronautics and
Space Administration
Langley Research Center
Hampton, Virginia 22365

Mr. T. M. Vann
R-ME-MM
National Aeronautics and
Space Administration
Marshall Space Flight Center
Huntsville, Alabama 35812

Mr. Leon A. Vorst
Technology Incorporated
Dayton, Ohio

Ratchet Hand Tool

Dr. R. W. Waniek
Advanced Kinetics, Inc.
1231 Victoria
Costa Mesa, California 92627

Mr. J. Whitaker
The National Cash Register Co.
Main & K Street
Dayton, Ohio 45409

Extravehicular Space
Adhesive System

Mr. Ernest Wilcomb
Raff Associates, Inc.
912 Thayer Avenue
Silver Spring, Maryland 20910

Space Tool Mitten and Tool Cuff

Mr. James D. Wilger
Technology Incorporated
Dayton, Ohio

Ratchet Hand Tool

Mr. William A. Wilson
Manufacturing Engineering Lab
National Aeronautics and
Space Administration
Marshall Space Flight Center
Huntsville, Alabama 35812

Mr. N. F. Witte
Space Division
North American Rockwell Corp.
12214 Lakeward Boulevard
Downey, California 90241

Mr. Stanley Wohler
Kelleth Aircraft Corporation
P. O. Box 35
Willow Grove, Pennsylvania 19090

Mr. A. T. Woodford
Special Products and
Applied Research Division
Dehavilland Aircraft of Canada, Ltd.
Malton, Ontario

Astronaut Boom Attachment System

Mr. Carl Woods
National Aeronautics and
Space Administration
Marshall Space Flight Center
Huntsville, Alabama 35812

Dr. Edward C. Wortz
Project Scientist
Life Sciences Department
Airesearch Manufacturing Co.
Division of Garrett Corporation
9851-9951 Sepulvida Boulevard
Los Angeles, California 90009

APPENDIX D

Index and Literature Search

Applied Science and Technology Index

Engineering Index

International Aerospace Index

Aviation Week and Space Technology (1956 to present)

The periodicals listed in these indexes were reviewed for gathering space tool information used for this cataloging effort.

Applied Science and Technology Index

The following is a partial list of the periodicals referenced in the Applied Science and Technology Index, (1961-January 1969).

American Institute of Aeronautics and Astronautics Journal

Adhesive Aids

Aerospace

Aerospace Technology

Aircraft Engineering

American Machinery

American Sciences

American Society of Civil Engineering Proceedings

Applied Mathematics and Mechanics

Astronautics and Aeronautics

Aviation Week and Space Technology

Computer Design

Control Engineering

Engineer

Engineering

Iron Age

Iron and Steel Engineering

Journal of Aircraft

Journal of Applied Physics

Journal of Basic Engineering

Journal of Engineering for Industry

Journal of Spacecraft and Rockets

Light Metal Age

Lubrication Engineering

Machine Design

Machinery

Mechanical Engineering

Product Engineering

Society of Automotive Engineering Journal

Safety Maintenance

Science

Science and Technology

Scientific American

Space/Aeronautics

Tool and Manufacturing Engineering

Welding Engineer

Engineering Index

The following is a partial listing of the periodicals covered in the Engineering Index (1960-1968).

Advances in Applied Mechanics

Advances in Astronautical Science

Aeronautical Quarterly

American Society of Tool and Manufacturing Engineering

The American Society of Mechanical Engineers

The British Welding Journal

Cutting Tool Engineering

Design Engineering

Fasteners

Flight

Machine Tool Engineering

Welding Research Council

Adhesive Aids

Aerospace Technology

Aircraft Engineering

American Machinery

American Sciences

American Society of Civil Engineering Proceddings

Applied Mathematics and Mechanics

Astronautic and Aeronautics

Control Engineering

Engineer

Engineering

Iron Age

Iron and Steel Engineering

Journal of Aircraft

Journal of Applied Physics

Journal of Basic Engineering

Journal of Engineering for Industry

Journal of Spacecraft and Rockets

Light Metal Age

Lubrication Engineering

Machine Design

Machinery

Machanical Engineering

Product Engineering

Society of Automotive Engineering Journal

Safety Maintenance

Science

Scientific American

Space/Aeronautics

Tool and Manufacturing Engineering

Welding Engineer

Miscellaneous

The following types of publications were covered in the International Aerospace Abstracts (1962-1969).

1. Periodicals (Including Government sponsored journals) and books.

2. Meeting Papers and Conference Proceedings Issued By Professional Societies and Academic Organizations.

3. Translations of Journals and Journal Articles.

In addition, the Aviation Week and Space Technology magazine was carefully searched from 1956 to the present.

APPENDIX E

Space Equipment and Tools Not Included in the Catalog (1969)

Below, there is a list of some of the tools or tool concepts that have been developed but have no entries in the present catalog. An entry may have not been made for a tool for one or more of the following reasons:

(1) The tool has not reached the breadboard stage.

(2) Insufficient information is available for a meaningful entry.

(3) Sufficient information was not received in time for an entry to be included in the catalog.

However, since the catalog user may be interested in some of these tools, a list of these tools is provided below.

1. Adapter Handle
2. Apollo Extension Handle
3. Apollo Lunar Hand Tools (ALHT)
   a. Aseptic Collection Device
   b. Brush/Scriber/Hand Lens
   c. Cap and Chisel Bit Bracket Assembly
   d. Collection Bag
   e. Color Patch
   f. Core Tubes
   g. Extension Handle
   h. Field Sample Bags
   i. Gnomon
   j. Hammer
   k. Instrument Staff
   l. Large Scoop
   m. Modular Equipment Stowage Area (MESA)
   n. Sample Return Container
   o. Small Scoop
   p. Spring Scale

q. Surveying Instrument

r. Tether Hook

s. Tongs

t. Tool Carrier

4. Chip Collector/Tool System
5. Contingency Sampler
6. Crank-Torque Limiting Tool
7. End Wrench
8. Meteroid Puncture Repair Tool
9. Modified Kellet Hand Tool
10. Solid State Radiographic Image Amplifier
11. Space Tool for Extravehicular Emergencies (STEVE)
12. Squeeze Handle Socket Drive
13. T-Handle/Gauntlet Combination Tool
14. Utility "T" Jet
15. Wrench Assembly

APPENDIX F

Acronyms and Abbreviations

The following list presents those contractions and word equivalents of units of measurement, tool names and functional categories that have been shortened either through popular use or because of space limitations in the catalog.

A	Ampere
A-hr	Ampere-hour
ALHT	Apollo Lunar Hand Tools
Atm	Atmosphere
BIRT	Bolt Installation and Removal Tool
BONDELECTAD & MAINTEQUIP	Bonding and Electroadhesor Tools and Maintenance Equipment
BRT	Aero Jet Space Bolt Removal Tool
CIR	Controlled Internal Restraint Collar
cm	Centimeter
cm/sec	Centimeters per second
ECA	Electronic Control Assembly
ECU	Electrical Control Unit
ft	Feet
ft-lb	Foot-pounds
G-LEAK-PRESS, DETEC&MEAS	Gas Leak, Pressure Detection and Measurement Tools and Equipment
ILLUM-EQUIP	Illumination Equipment
in.	Inch
in.-lb	Inch-pounds
in./min	Inches per minute
kg	Kilogram
KITS&SETS	Tool Kits and Tool Sets
kV	Kilovolt
kW	Kilowatt
lb	Pound
LM	Lunar Module
LUN-SAMP & SURV-TOOLS	Lunar Sampling and Surveying Tools
m	Meter
mA	Milliampere
MESA	Modular Equipment Stowage Area
min	Minute
m-N	Meter-Newtons
μA	Micro-ampere
mV	Millivolt
N	Newton
NAB	Nut and Bolt Wrench
N/m^2	Netons per square meter
O&R TOOLS & MAINTEQUIP	Orientation and Restraint Tools and Maintenance Equipment
^oC	Degrees Centigrade
^oF	Degrees Fahrenheit
^oK	Degrees Kelvin

PLENCH	Pliers-Wrench
PLGT	Prototype Lunar Geologist Tool
psi	Pounds per square inch
psig	Pounds per square inch gauge
rad	Radians
SCREW&TORQUE TOOLS	Screwdriving and Torqueing Tools
SCS	Stabilization and Control System
Spunfit	Space Union and Fitting
STEVE	Space Tool for Extravehicular Emergencies
stand. $in.^3/sec$	Standard cubic inches per second (Standard conditions are $20^{\circ}C$ at Atm)
stand. cm^3/sec	Standard cubic centimeters per second (Standard conditions are $20^{\circ}C$ at 1 Atm)
TOOL-ELECT & ELEC-EQUIP	Tools for Maintaining Electrical and Electronic Equipment
TUBE-CONNEC TOOLS	Tube Connection Tools
V	Volt
W	Watt
W-hr	Watt-hour

APPENDIX G

Forms for Updating Tool Entries and for the Submission of New Tool Data

NASA

SPACE EQUIPMENT AND TOOL CATALOG

DATA (NEW-UPDATE) ENTRY FORM

FORM "A"

_____

TOOL NAME

To:

Charles Kubokawa
N 239-3
NASA, Ames Research Center
Moffett Field, California 94035

From:

Name:_____

Firm:_____

Address:_____

_____

_____

Please enter the following, as appropirate:

☐ "New Tool" Data* as of Date:____/____/____
Month Day Year

☐ Tool Data Correction (Tool description, typing error, name-address error, data, company, etc.)

Page:_____ Paragraph:_____ (A-K)

Should Read From:_____ .

_____

_____

To: _____

_____

_____

* "Form B" format should be used for submitting new tool data.

Page:_____ Paragraph:_____ (A-K)

Should Read From:_____

_____

_____

To: _____

_____

_____

☐ Tool Photo

☐ New source of information on following tool:

Name of Tool:_____
Author: _____
Report Title:_____
Published: _____
Pages: _____
Date: _____

Name of Tool:_____
Author: _____
Report Title:_____
Published: _____
Pages: _____
Date: _____

☐ Retract tool data because:

- ☐ Tool no longer used
- ☐ Data outdated
- ☐ Tool failure
- ☐ Tool cannot be used in space
- ☐ Other:_____

_____

_____

For Additional information:

☐ Please contact me at above address or phone:

_____ _____ _____ _____
Area Code Exchange Number Extension

☐ Please contact person listed below:

Name: _____

Address: _____

City: _____

Zip: _____

Phone: _____ _____ _____ _____
Area Code Exchange Number Extension

☐ Additional Data Enclosed

Signed: _____

FORMAT FOR NEW ENTRY OR UPDATING SPACE TOOL DATA

FORM "B"

_____

TOOL NAME

To:
Charles Kubokawa
N 239-3
NASA, Ames Research Center
Moffett Field, California 94035

From:
Name:_____
Firm:_____
Address:_____
_____
_____

A. PURPOSE:

B. PREVIOUS SOLUTIONS:

C. CURRENT METHOD OF OPERATION:

D. RELATED FUNCTIONAL CATEGORIES:

E. PERFORMANCE:

F. ADVANTAGES AND DISADVANTAGES:

G. STATUS:

	Projected Date	Actual Date	Posted Date
Operational Model	_____	_____	_____
Prototype Model	_____	_____	_____
Breadboard Model	_____	_____	_____

Manufacturer:
Sponsor:
Patent No. and Rights:

H. SPECIFICATIONS

I. SUPPORT EQUIPMENT:
Power Source:
Accessories:

J. FOR MORE INFORMATION REFER TO:
Bibliography:
Tool Reference:

K. PHOTOGRAPH:

NASA-Langley, 1971 —— 5