N71-33400

CR-111932
SVHSER 5903

Hamilton Standard DIVISION OF UNITED AIRCRAFT CORPORATION

DESIGN AND FABRICATION OF A FLIGHT CONCEPT PROTOTYPE VAPOR DIFFUSION WATER RECLAMATION SYSTEM

by

Henry J. Kolnsberg
and
Donald R. McCann

Prepared Under Contract Number NAS 1-8943

by

HAMILTON STANDARD DIVISION
UNITED AIRCRAFT CORPORATION
WINDSOR LOCKS, CONNECTICUT

SEP 1971
RECEIVED
NASA STI FACILITY
INPUT BRANCH

for

NATIONAL AERONAUTICS AND SPACE ADMINISTRATION

August, 1971

FOREWORD

This report has been prepared by the Hamilton Standard Division of the United Aircraft Corporation for the National Aeronautics and Space Administration's Langley Research Center in accordance with Contract NAS 1-8943.

Appreciation is expressed for the efforts of Messrs. W. Blecher, H. Brose, M. Dudarevitch, F. Greenwood and J. Lovell of Hamilton Standard; Mr. C. Desaulniers of the Amicon Corporation; and Messrs. V. Collins, J. Hall and C. Saunders of NASA-Langley Research Center, without whose assistance and advice this program could not have been successfully completed.

ABSTRACT

This report covers the design, fabrication and test of an experimental vapor diffusion urine water reclamation system. It utilized a polyvinyl chloride membrane and achieved better than 95% recovery efficiency during a 90 day continuous test. The system also incorporated features that exercised microbiological control over the product water.

TABLE OF CONTENTS

	Page
SUMMARY	1
INTRODUCTION	2
OBJECTIVES	4
CONCLUSIONS	5
RECOMMENDATIONS	6
SYSTEM DESIGN	7
System Concept	7
Chemical Pretreatment Concept	11
Microbiological Concept	11
Hardware Design	12
System Sizing	12
Component Design	13
Component Functional and Design Specifications	29
SYSTEM DEVELOPMENT	36
Membrane Development	36
Supplier Selection	36
Membrane Material Testing	37
Membrane Bonding	41
Manufacturing	41
Test Program	44
Component Testing	44
System Development Testing	45
System Evaluation Testing	48
90 Day Continuous Run Reliability Test	50

TABLE OF CONTENTS (Concluded)

		Page
FLIGHT SYSTEM ESTIMATE		78
Appendices		
A	Test Plan	A-i
B	Test Data Sheets	B-i
C	Test Log	C-i
D	Calculations and Analytical Relationships	D-i
	Recovery Efficiency Calculations	D-1
	Process Heat Balance Calculations	D-3
	Theoretical Effect of Gap Width Variation	D-6
	Process Mathematical Analysis	D-7
	Accuracy Analysis	D-9
E	Operating Instructions	E-i
F	References	F-i

LIST OF FIGURES

Figure Number	Title	Page
1	Flight Concept Prototype VDR System	3
2	Evaporator - Condenser Module Cross Section	8
3	Basic VDR System	9
4	Automated VDR System	10
5	Evaporator - Condenser Assembly	14
6	Membrane Module	16
7	Condenser Module - Original Design	18
8	Condenser Module - Final Configuration	19
9	Cycle Tank and Heat Exchanger	20
10	Solids Dump Control Diagram	23
11	Electrical System Schematic	24
12	Circuit Diagrams	25
13	Flight Concept Prototype VDR System	27
14	Tank Package	28
15	Membrane Test Fixture	38
16	Membrane Test Results	40
17	System Assembly - Original Design	43
18	Preliminary Test Results - Urine Flow vs. Process Rate	49
19	90 Day Test Set Up - Schematic	53
20	90 Day Test Set Up	54
21	Urine Collection	55
22	90 Day Test Results - Processing Rate and Conductivity	58

LIST OF FIGURES (Concluded)

Figure Number	Title	Page
23	90 Day Test Results - pH Values	59
24	Urine Solids in Outlet Fitting	65
25	90 Day Test Membrane Modules	72
26	90 Day Test Membrane Solids Build Up	73
27	90 Day Test Urine Feed Tube	74
A1	Test Set Up Schematic	A-4
D1	System Heat Balance	D-5

LIST OF TABLES

Table Number	Title	Page
1	Preliminary Test Bacteria Analyses	51
2	Product Water Analysis Prior to Charcoal Filtration	60
3	90 Day Test Bacteria Analyses	61
4	90 Day Test Results - Bacteria Challenge	67
5	Maintenance Operations and Execution Times	70
6	90 Day Test - Typical Process Constants	77
A1	Product Water Analyses	A-9

SUMMARY

A flight concept prototype vapor diffusion water reclamation system was designed, fabricated and subjected to a 90 day continuous run reliability test. The system utilizes a polyvinyl chloride membrane material developed by Amicon Corporation and is automated to reduce required manual operations to a minimum. The test program resulted in the development of operational techniques which improved the water recovery efficiency, enabling the system to meet or exceed the design specifications of 95% recovery efficiency and 0.505 pounds (229 grams) per hour average processing rate. A 96.6% recovery efficiency and 0.675 pounds (306 grams) per hour average processing rate were achieved during the best of the eight urine fill to solids dump cycles completed during the test.

Manual operations and maintenance during the test required an average time of only 6.6 minutes per day. Subsequent refurbishment of the system has eliminated fittings and restrictions in the urine flow loop responsible for 4.7 minutes per day of maintenance time. Membrane life for the test averaged 60 days, with one of the original four membrane modules lasting the entire 90 days.

The system demonstrated its basic resistance to the transmittal of bacteria by successfully resisting a challenge with viable micro-organisms and by utilizing an automatic sterilization procedure to effectively clean the product water side of the system after an accidental contamination.

Based on the results of this program, the VDR concept has shown itself to be a viable system for spacecraft water reclamation. However, additional effort in the development of membranes to improve life, strength and fabricability and in the improvement of the hardware to provide increased system effectiveness and reliability is recommended.

INTRODUCTION

On manned space missions of extended duration, crew requirements for potable water for consumption, food preparation and sanitation will demand the constant reclamation and re-use of waste waters. One of the major sources of waste water is urine, whose high impurity concentration level makes it the most difficult of the reclaimable waste waters to restore to potable condition. A number of processes have been proposed to effect the required separation of water from urine and a few have shown promise as prospective flight systems. Prominent among these is the vapor diffusion process, which utilizes a semi-permeable membrane as the separating medium between the urine and pure water vapor extracted from the urine in a phase - change process.

The feasibility of the vapor diffusion process was demonstrated in laboratory tests at Hamilton Standard. The process was subsequently incorporated into a laboratory prototype system under contract NAS 1-5312 for NASA - Langley Research Center. Tests of this laboratory prototype system under contracts NAS 1-5312 and NAS 1-7170 indicated that the system compared favorably with all other water reclamation systems from the stand points of weight, power consumption, reliability, reclamation efficiency and production of bacteria-free water.

This program was conducted to design, build and demonstrate a flight concept prototype system utilizing an improved, longer-life membrane in a configuration that permits simple, quick replacement of used membranes. The system produced, though not fully flight optimized, reflects the configuration of a flight system and is automated to minimize required operator time. The completed system is shown in Figure 1.

This report describes the design, manufacture, development and testing of the flight concept prototype system from the inception of the program through the completion of a continuous 90 day test.

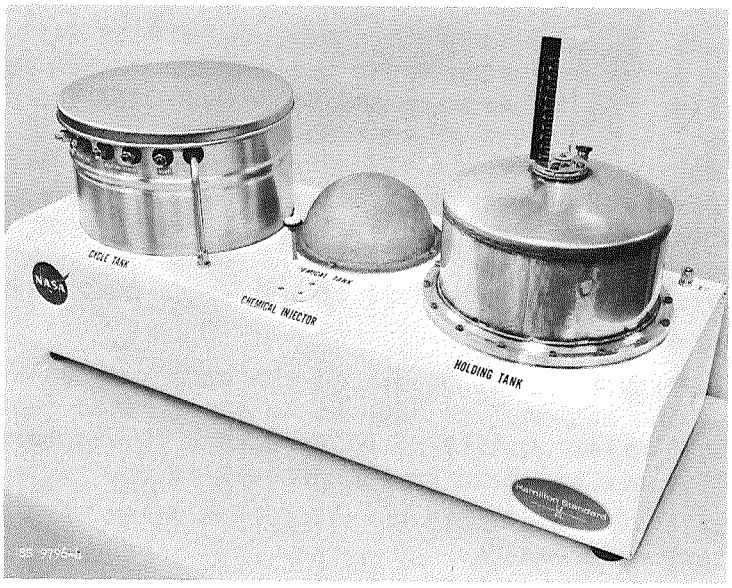

(TANK PACKAGE)

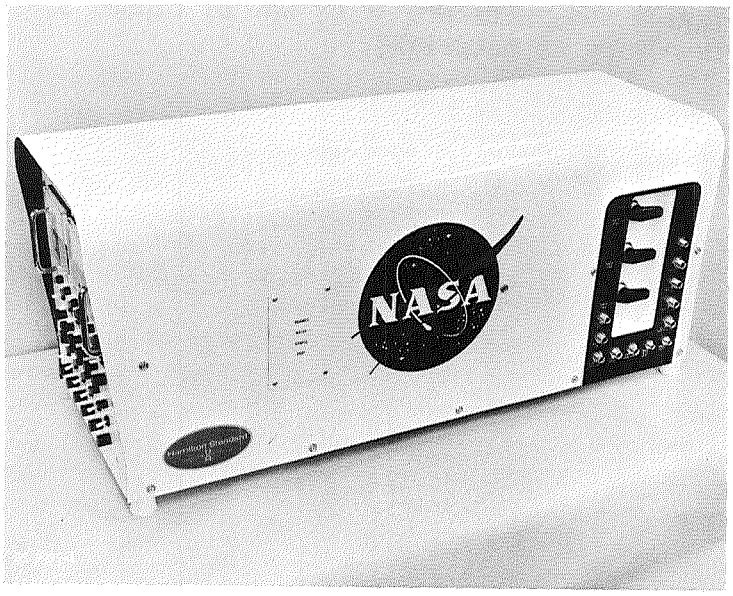

(SYSTEM ASSEMBLY - FINAL CONFIGURATION)

FLIGHT CONCEPT PROTOTYPE VDR SYSTEM

FIGURE 1

OBJECTIVES

The principal objectives of this program were to design, fabricate and test a membrane vapor diffusion water reclamation system incorporating the design features of flight hardware and to demonstrate the feasibility of the technique by at least 90 days of continuous operation with minimum maintenance. A secondary objective was the development of a membrane material capable of demonstrating superior service life, improved structural properties and good fabricative characteristics. Specific design objectives included:

1. Minimum daily recovery of 95% of the water contained in 13.2 pounds (6 kilograms) of urine.
2. Water quality to equal or exceed the standards of the Space Science Board of the National Academy of Science, dated September 1967. Biological water quality of no more than 10 viable micro-organisms per milliliter anywhere in the product water.
3. Suitability for a 6 month no-resupply mission with minimum frequency of routine maintenance.
4. Membrane replacement by way of prefabricated modules requiring the exposure of urine to the atmosphere only through quick disconnect fittings.
5. Urine charge and pretreatment by way of closed systems requiring no manual handling of materials.

CONCLUSIONS

The vapor diffusion water reclamation system designed and fabricated during this program is representative of a flight system in basic operation, configuration and control. It is capable of meeting the processing requirements of a four-man urine water reclamation system for extended periods with minimum maintenance and replacement of expendables.

The quality of the water produced by the system during the 90 day endurance test was well within the chemical limits set by the Space Science Board, as determined by analysis prior to charcoal filtration. Exposure of the system to virulent bacteria cultures showed the system's capability to restrict the travel of bacteria to maintain the sterility of the product water side of the system. The effectiveness of the sterilization heat cycle in reducing bacteria counts in the product water showed the system's capability to recover sterility of the product water side if it should accidentally be contaminated.

The prototype unit could be adapted to zero-g operation by adding a phase separator to the recirculating urine loop. There is approximately 30% gas by volume in the recirculating liquid leaving the modules. This is caused by permeation of pressurizing gas through the membranes. This problem may be overcome by developing a tighter membrane material to prevent the permeation of gas into the urine or a zero-gravity gas separator to remove the entrained gas.

Variations in the useful life of the membranes used in the 90 day endurance test remain unexplained. Identification of the mechanical or chemical processes leading to the degradation and eventual failure of the membrane material was not possible from the test data or by cursory examination of the membrane surfaces at the conclusion of the test.

Currently available quick disconnect fittings and solenoid operated flow control valves, which require the axial flow of fluid in an annular passage around spring-loaded operating plungers are not suitable for use in the concentrated urine circulation loop where precipitated solids can restrict the flow in such passages or hinder the operation of the plungers.

The system's weight and volume, originally within the contractually established targets of $\pm$ 50% of the flight system weight estimate and less than 3500 cubic inches, were expanded to permit the inclusion of more reliable commercial components and to provide easier access to the various components for maintenance or replacement. The utilization of components designed specifically for a flight system would reduce both weight and volume to levels competitive with any water reclamation system currently under study.

Similarly, the use of pumps and electrical components specifically designed for a flight system would minimize power requirements for urine circulation and automatic system control to a fraction of their present value.

RECOMMENDATIONS

The success of the flight concept prototype system as measured by product water quality and microbiological control during the 90 day test indicates that further development toward a flight system would be advisable. Such work should include the development of a membrane material with a structure tight enough to prevent the permeation of gap pressurizing gas to the circulating urine and strong enough to eliminate the need for any back-up support. The mechanism of membrane failure and its effects on useful membrane life should be a part of this development process. Microscopic examination of the membranes removed from the system at the conclusion of the 90 day test could provide an explanation of the variations in useful life observed and baseline data for further investigation of the failure mechanism. Improved fabricability, enabling the bonding of membrane sheets or the formation of membranes during original formulation into an integral membrane evaporator, should also be investigated.

The development of a urine-gas separating device that will operate without dependence on gravity would be valuable both to the VDR system, in the event that a non-permeable membrane cannot be developed, and to urine management systems in general for the elimination of entrained gas to simplify handling and to minimize oxygen-enhanced chemical breakdown of the urine.

Experiences with the flight concept prototype system indicate the need for the development of a non-clogging quick disconnect fitting for use in the urine loop. Such a fitting would have to eliminate the annular flow arrangement common to all currently available fittings to prevent the precipitation of urine solids and the resultant blockage of flow. The principle utilized could also be adapted for use in solenoid-operated divert valves to the same end.

To reduce the weight, volume and power requirements of a flight system, design and development of components tailored specifically to the requirements of the system should be undertaken. These should include the commercially available urine pumps, solenoid valves, chemical injector, and electronic conductivity sensing and control devices utilized in the prototype system.

SYSTEM DESIGN

The design of the flight concept prototype system was based on the laboratory prototype system produced under contract number NAS 1-5312 with additions to provide automatic operation and minimize required operator attention. The system concept, sizing and component design effort is described in this section.

SYSTEM CONCEPT

The vapor diffusion water reclamation process employs the principles of distillation to effect the separation of potable water from chemically pretreated urine. As shown in Figure 2, a semi-permeable membrane acts as a high entrainment efficiency zero-gravity phase separator between the liquid urine and the pure water vapor. In the system, pretreated urine is heated in a cycling tank and circulated across the skin surface of a semi-permeable membrane in a replaceable evaporator module. The opposite side of the membrane is exposed to a positively-pressurized gas gap. Immediately opposite the membrane surface is a porous metal plate, constantly cooled by a flow of chilled fluid, of a condensing water separator. Water vapor is transferred through the membrane by the differential partial pressure established by the temperature difference between the urine and the gas gap. It is diffused by the same mechanism from the membrane surface to the porous plate. There it is condensed and driven as liquid water through the porous plate by the total gas pressure in the gap to a collection chamber behind the porous plate. Gap gas pressure is maintained at a level high enough to drive the condensate through the porous plate and into a collection vessel but lower than the gas breakthrough pressure of the plate, so that no gas is lost from the gap and no further separation of gas and water is required.

The basic vapor diffusion system, shown schematically in Figure 3, consists of (1) a cycle tank which contains coils to circulate heating fluid for the maintenance of the required urine temperature, (2) the evaporator and condenser modules, (3) a urine circulating pump and (4) a charcoal filter for final polishing of the product water. In operation, the urine is held at operating temperature by the heating coils in the cycle tank, pumped through the evaporator modules, where its solids concentration level is increased by the removal of water and returned to the cycle tank for additional processing. The solids concentration level in the cycle tank, constantly increased by the removal of water, is periodically lowered by additions of small batches of pretreated urine until such time as the concentration in the tank precludes the economic removal of any additional water. The concentrate is then dumped from the tank and replaced by a fresh charge of pretreated urine and the concentration cycle restarted.

The system lends itself readily to almost total automation with the addition of the components shown schematically in Figure 4. These include, as additions to the basic four components, a urine supply tank (5) and a solenoid operated urine feed valve (6) controlled by a level-sensing device (7)

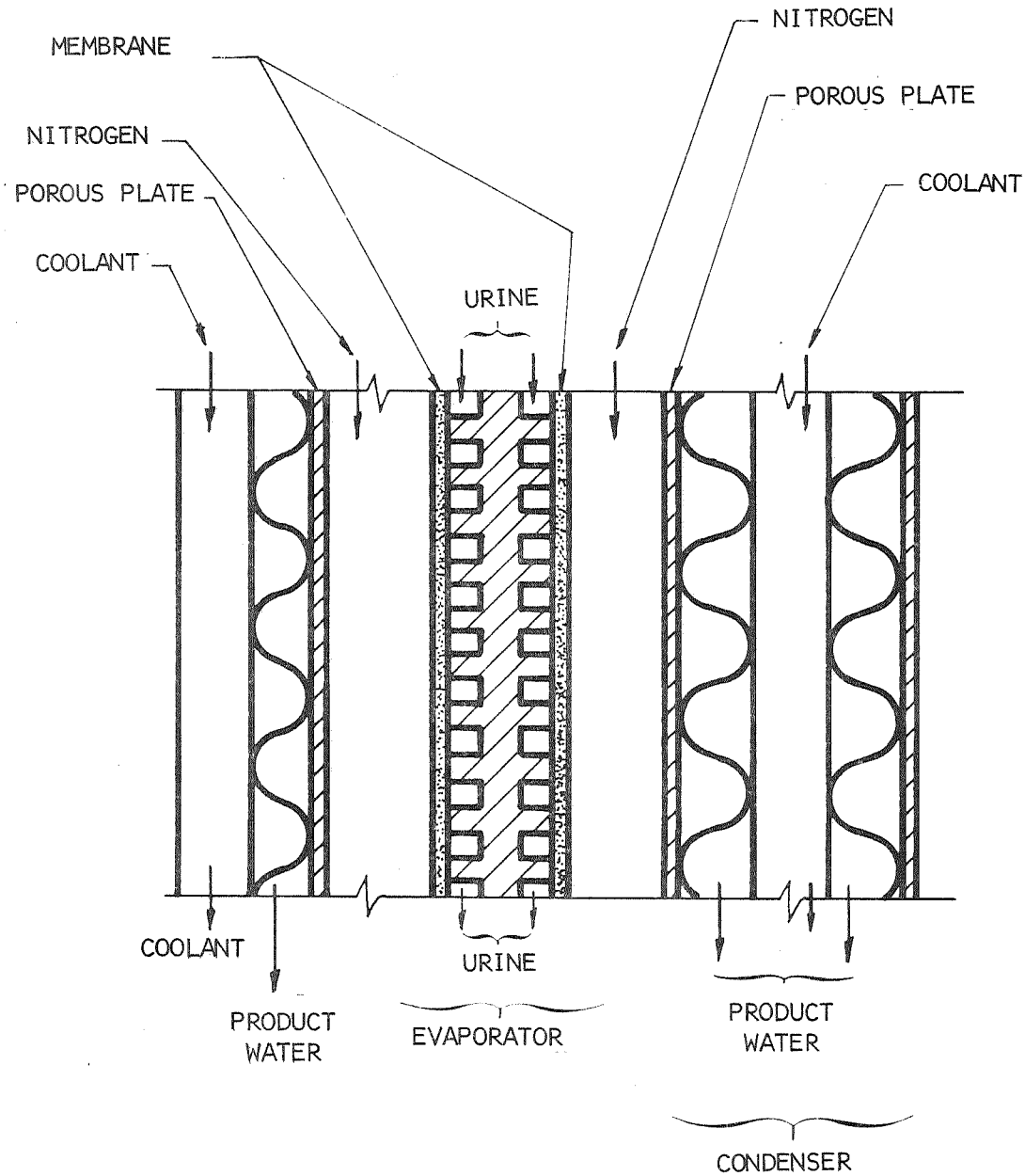

EVAPORATOR-CONDENSER MODULE CROSS SECTION

FIGURE 2

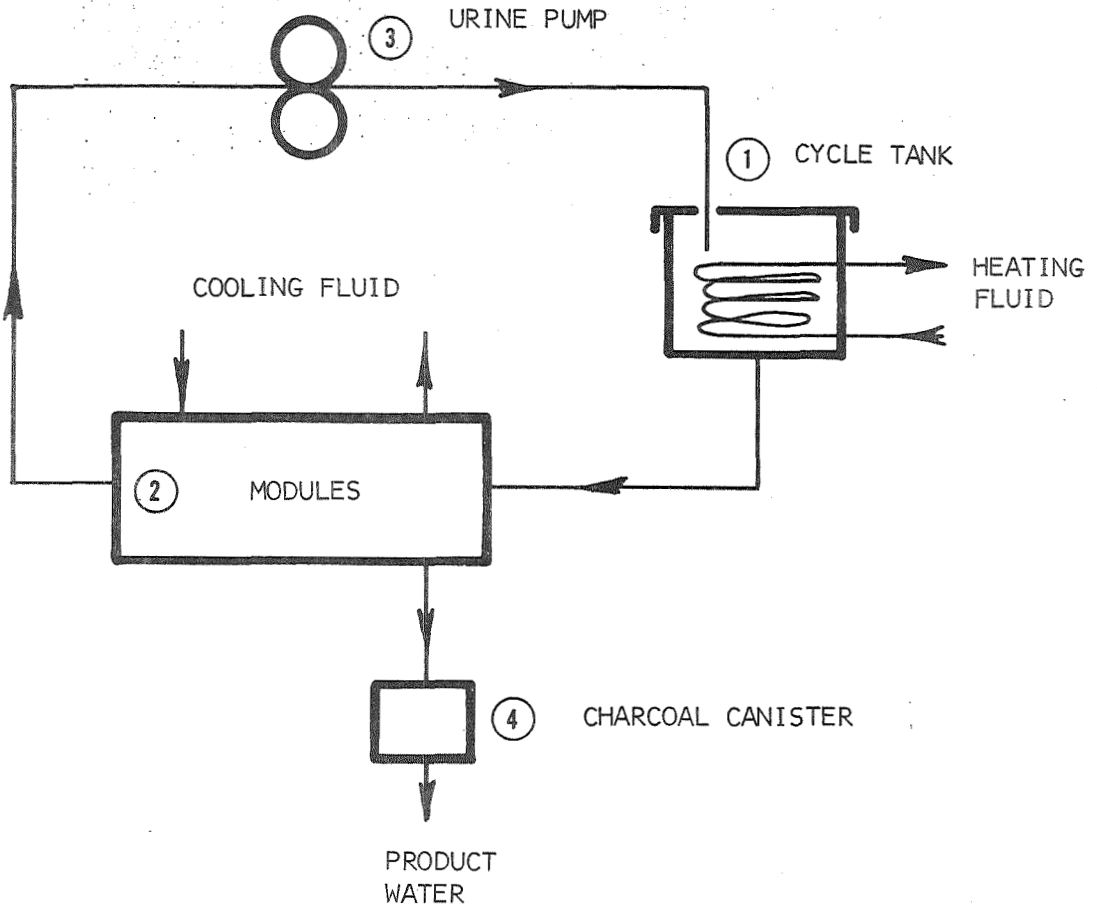

BASIC VDR SYSTEM

FIGURE 3

in the cycle tank to maintain an optimum volume of urine in the system; a conductivity sensor (8) in the urine circulation line, used in conjunction with a solenoid-operated urine solids divert valve (9) and a second level-sensing device (10) to dump urine solids from the system and a conductivity sensor (11) in the product water delivery line to indicate the gross purity level of the product water and provide for the automatic diversion for re-processing of unacceptable water through a solenoid-operated divert valve (12). Proper urine and cooling fluid temperatures are maintained by solenoid-operated divert valves in the heating (13) and cooling (14) fluid lines, controlled respectively by thermistors in the urine circulating line (15) at the cycle tank inlet and in the cooling fluid line (16) at the condenser inlet.

The addition of these components reduces the required routine manual operations to the periodic replacement of the membrane evaporator modules and the introduction of the urine pretreatment chemical from the chemical tank (18) to the urine supply tank by means of the chemical injector (19).

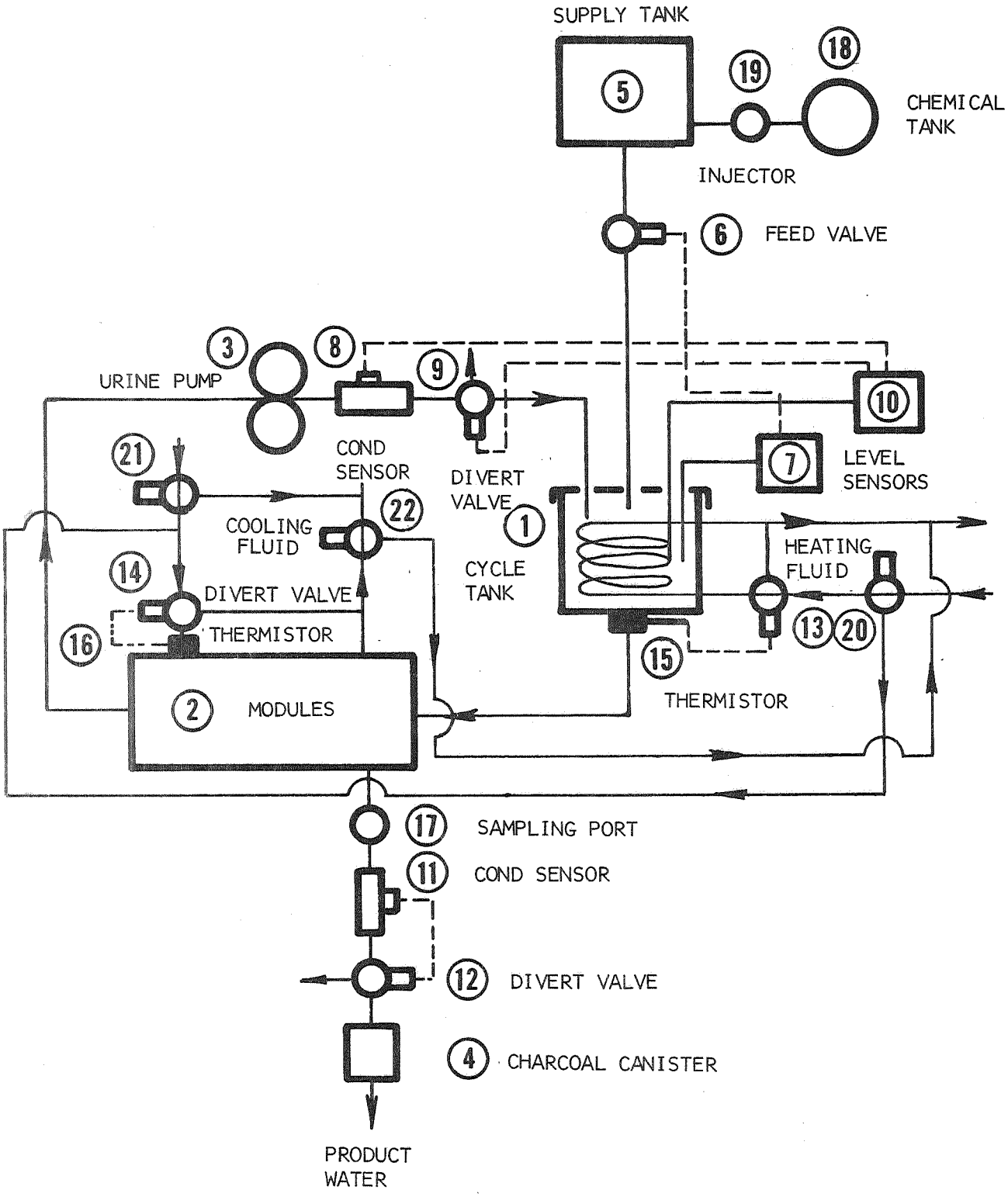

AUTOMATED VDR SYSTEM

FIGURE 4

A sampling port (17) provides for the periodic manual sampling of the product water for microbiological analysis without hindering the operation of the system in any way.

Chemical Pretreatment Concept

The urine pretreatment chemical, a solution of chromium trioxide and sulfuric acid, is added to the raw urine to prevent the breakdown of the urine impurities into ammoniacal compounds which would produce free ammonia, a highly volatile compound virtually impossible to separate from the product water in the distillation process of the system. This free ammonia may be produced in raw urine by the thermal decomposition of the already present ammonium carbonate group as the urine is heated, and by the action of bacteria on the already present urea which produces additional ammonium carbonate. The pretreatment chemical prevents both of these by converting the ammonium carbonates to the more thermally stable ammonium sulfate by chemical reaction with the H_2SO_4 and by killing any bacteria present in the urine through the action of the bactericidal hexavalent chromium ions. An additional activity of the pretreatment chemical is the oxidation by both the chromium trioxide and the sulfuric acid of trace organic compounds present in the urine which could produce odorous volatile compounds that would be carried into the product water in the same manner as the free ammonia.

The stoichiometric amount of pretreatment chemical required for the basic ammonia fixation has been calculated, based on average impurity concentrations, as 2.5 milliliters per liter of raw urine. Experimental evaluations over a period of years, however, have indicated that the margin of safety occasioned by increasing the pretreatment concentration to 4 milliliters per liter will cover the contingencies arising from unavoidable temperature excursion during processing and from unusually high initial solids concentrations found occasionally in the raw urine.

Microbiological Concept

While the pretreatment chemical is an effective bactericide under normal conditions, it is not present in sufficient concentration to prevent the growth of bacteria in a grossly infected condition. The vapor diffusion system, however, inherently provides additional safeguards to prevent the transfer of potentially dangerous micro-organisms to the product water. The heating of the urine to operating temperature and the maintenance of this temperature for long periods of time is effectively a pasteurization process, sufficient at least to deter the runaway growth of bacteria in the urine and to inactivate viral particles. The molecular pore size of the membranes used in the system prevents the passage of micro-organisms from the urine to the diffusion gap under normal conditions. The positive gas pressure in the diffusion gap prevents the contamination of the gap or the condenser plates in the event of a membrane failure by permitting flow only from the gap to the urine.

An on-line sterilization procedure for the evaporator - condenser modules and the product water collector in the event of accidental microbiological contamination was added to the automated system. This procedure required the addition of flow control solenoid valves (Items 20, 21 and 22 in Figure 4) to circulate heating fluid through the module's cooling fluid passages, divert the flow of coolant fluid, and close the product water delivery line to prevent the evaporation of the water already in the collector. All valves are controlled by a timer switch to provide heating for a predetermined period with a manual override for special conditions.

HARDWARE DESIGN

The contractual design objectives and constraints applicable to the flight concept prototype system hardware included:

- A minimum recovery rate of 95% of the water contained in 13.2 pounds (6 kilograms) of urine per day.
- Provision for membrane replacement by way of prefabricated modules with openings of urine loop only through quick disconnects.
- Urine charging and pretreatment without manual handling of materials.
- System weight no more than 150% of estimated flight system weight.
- Volume within 3500 cubic inches excluding tankage.
- Urine heating external to modules.
- Urine heat exchanger at least 80% effective with maximum heating fluid temperature of 160°F.
- Automatic controls of heating and cooling fluid flows, product water and urine solids diversion and urine feed.
- Zero gravity urine cycle and chemical storage tanks.

The design effort, undertaken with these objectives and constraints in mind, is described below.

System Sizing

The primary consideration in sizing the flight concept prototype system was the membrane surface area necessary to meet the stated processing rate requirement. At this point in time, virtually all long-term experience with membranes in a full system application was with cellophane. Since it was impossible to predict the relative performance of the new membrane material to be developed, the sizing was undertaken on the basis of using cellophane membranes. Test data from the laboratory prototype evaluation study (NASA

Contract NAS 1-7170) indicated that the required processing rate of about 0.5 pounds (227 grams) per hour could be met with 170 square inches (1100 square centimeters) of membrane area and a diffusion gap width of 0.1 inches (.25 centimeters). These dimensions would require membrane replacement at about ten day intervals. To increase the time between required replacements to about thirty days, a membrane area of about four square feet (.372 square meter) with a gap width of 0.1 inches (.25 centimeters) was selected.

This selection also dictated the required porous plate area and provided the foundation for the design of the evaporator and condenser modules and their assembly.

Component Design

The design or selection of the major system components is described in this section. Specification sheets for each component follow the design descriptions.

Evaporator/Condenser Assembly

The alternating evaporator-condenser stack up configuration proposed in the laboratory prototype evaluation study provided an arrangement that permitted the distribution of circulating urine and cooling fluid from single feed lines in the most convenient manner as well as the most compact assembly. The development of this concept into operating hardware required only the establishment of the basic module size and the required gap width dimension. The basic module size was dictated by two factors: the total membrane area and the maximum available porous plate dimensions. Consultations with porous plate manufacturers indicated that eighteen inches (45.7 centimeters) was the largest dimension available in a homogeneous plate manufactured to our specifications. This dimension established the length of both the evaporator and condenser modules. The minimization of possible gas or water vapor leakage from the diffusion gap and the total force due to the gap gas pressure on the sealing surface of the membrane module required the minimization of sealing surface length and the corresponding width of the membrane module. The combination of these factors resulted in a design requiring the use of four membrane modules, each with internal surface dimensions of about 18.5 by 6 inches (47 by 15.25 centimeters) and an assembly with corresponding dimensions of 19.7 by 6.8 inches (50 by 17.3 centimeters). The assembly is shown in Figure 5. The maintenance of the proper diffusion gap width was assured by the design of the evaporator housings with close tolerance grooves to support and position the membrane modules. Sealing between the housings and the condenser modules was provided by silicone rubber gaskets in the peripherally bolted assembly.

The use of Boltaron structural polyvinly chloride as the material of construction for the module housings provided a light, rigid structure with enough yield in compression to ensure the proper sealing of the assembly without excessive bolting torque. Aligned holes through the housing and

Hamilton Standard
DIVISION OF UNITED AIRCRAFT CORPORATION

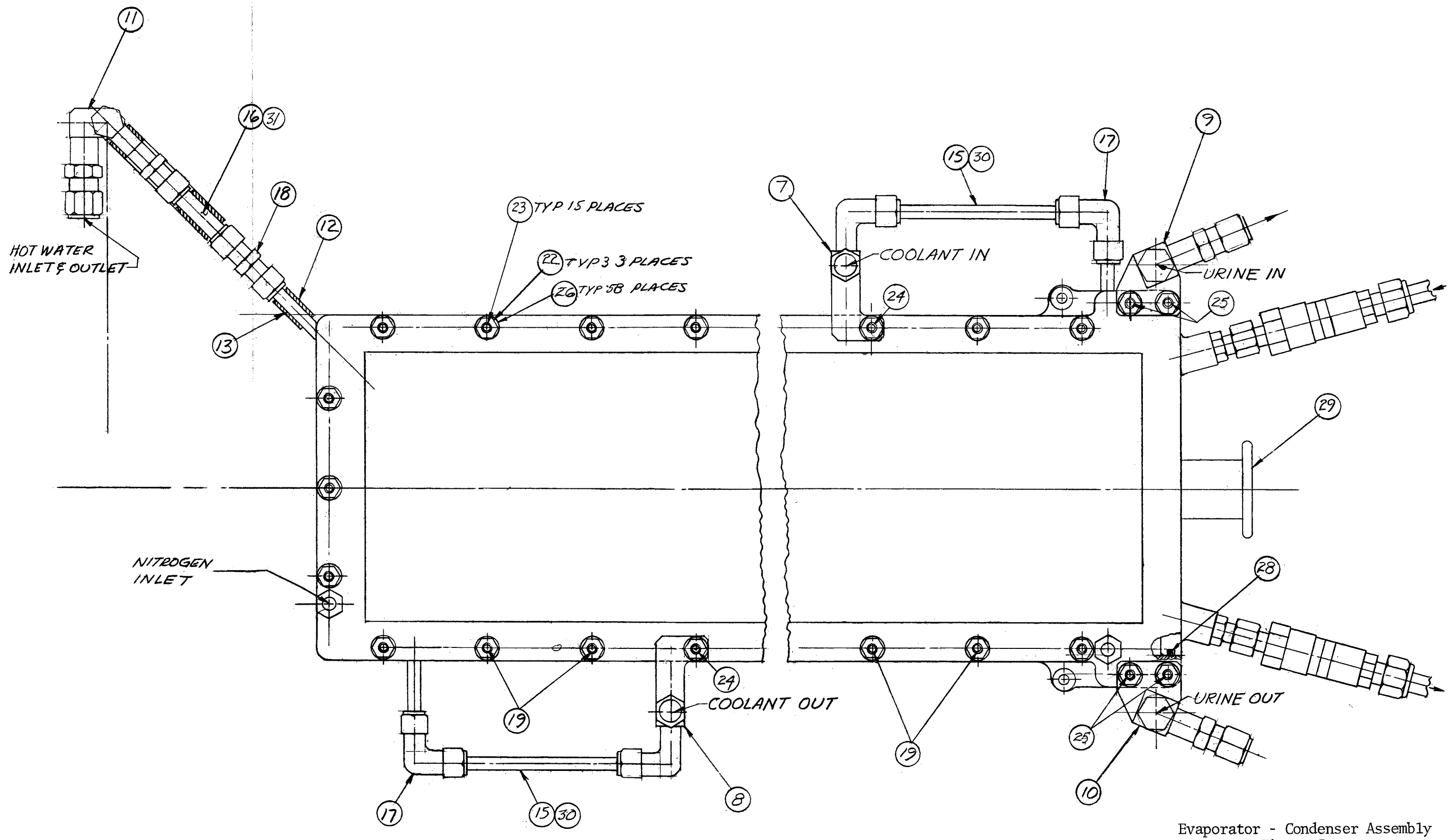

Evaporator - Condenser Assembly
Figure 5

gaskets to ports in the condenser module frames provided single point interfaces for the introduction of gap pressurizing nitrogen and cooling fluid to the assembly, eliminating the need for external headering.

Evaporator Module

Experience with the laboratory prototype system indicated that a urine flow path within a continuous channel behind the membrane provided good overall utilization of the membrane and eliminated possible stagnation points which might permit the precipitation and build up of flow restricting solids deposits. The urine flow passage was designed accordingly, with separate flow channels for each membrane fed from common points at one end of the module. Flow was channelled along the length of the module to minimize the number of turns in the flow path and their resultant flow restriction.

The module, designed with cellophane as a base line membrane material, provided metallic flanges and rubber gaskets for membrane retention. Material selection was left open until the final selection of a new membrane material so that a compatability of materials might be achieved, enabling the bonding of the membrane directly to the module. With the subsequent selection of polyvinyl chloride as the membrane material, the same structural PVC as used in the module housing was designated as the evaporator body material. Subsequent developments in the bonding of the membranes to the body structure and in the heretofore unobserved shrinkage of the structural PVC, described in following report sections, resulted in the addition of a PVC coated fiberglass screen under the membrane for support and a change to a filled Noryl material for the evaporator body. The final configuration is shown in Figure 6.

Condenser Module

The porous plate condenser-water separator used in the laboratory prototype system, a modification of a sublimating heat exchanger designed and built by Hamilton Standard for another space program, had proved totally effective in handling the maximum product water output of that system. Accordingly, the same basic core design was utilized for the flight concept prototype system with minor modifications as required due to changes in size and proportions. A T-bar frame around the core provided for the mounting and positioning of the module in the evaporator/condenser assembly. Ports cut into the frame and aligned with holes through the evaporator housing provided for the flow of cooling fluid and product water to all five condenser modules from common points. Compression type tube fittings welded to one of the outside condenser frames provided single point connections for each flow channel.

Manufacturing difficulties, described in a later section of this report, resulted in the abandoning of the frame design and the casting of filled polyester resin frames around the condenser cores. Stainless steel tubes were brazed to the cores prior to the casting operation to provide for cooling fluid and product water flows through external headers.

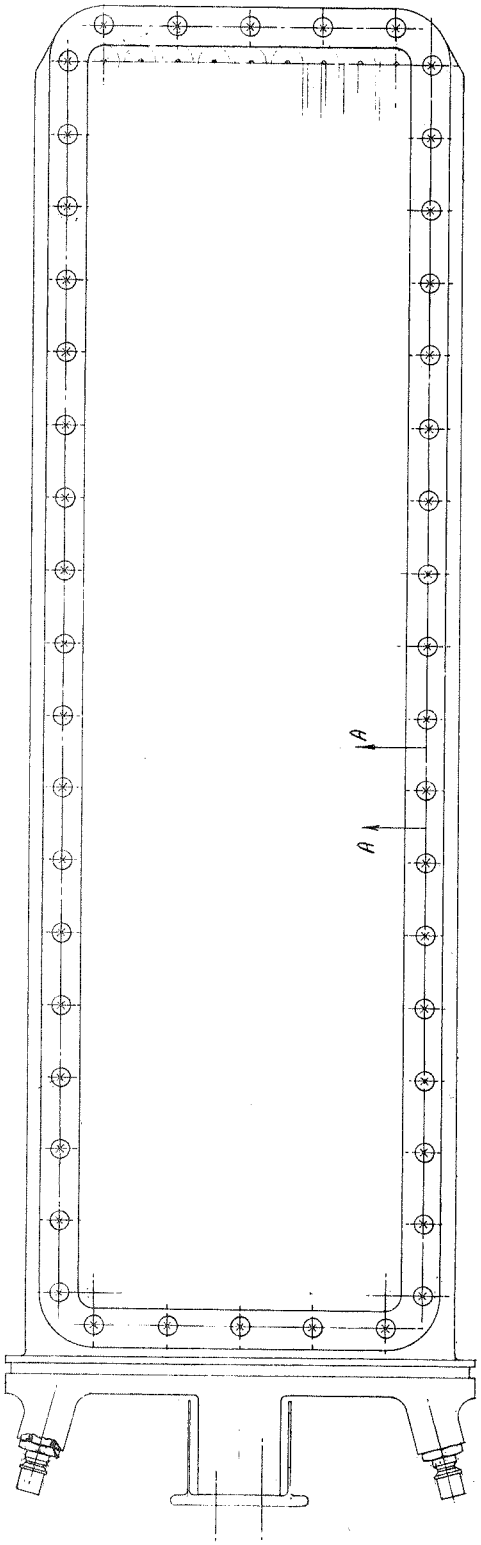

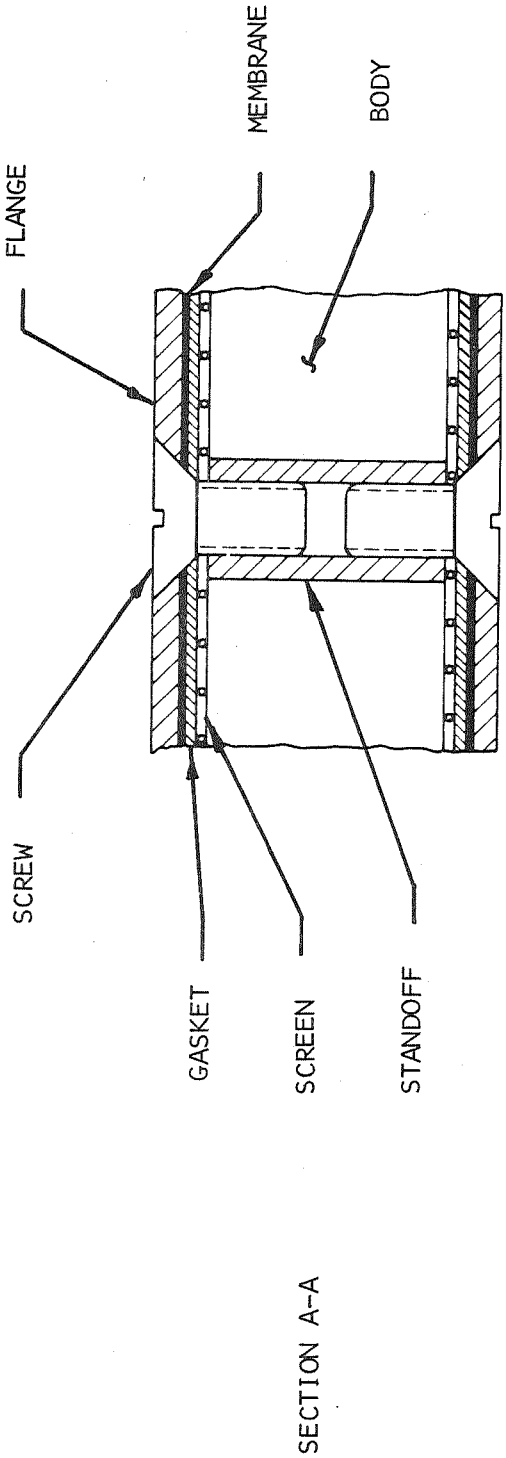

MEMBRANE MODULE

FIGURE 6

The original and modified module assemblies are shown in Figures 7 and 8.

Cycle Tank and Urine Heat Exchanger Design

The original concept of the urine cycle tank was that of a positive-volume, pressurized, zero gravity tank with provisions for automatic filling and dumping of urine solids. Accordingly, a proven design, used with the laboratory prototype system and utilizing a rolling diaphragm to provide pressurization and volume control, was modified by the addition of magnetically activated reed switches for fill control. Dump control was to be provided by a conductivity meter in the urine circulation loop. Urine heating with this cycle tank was accomplished by means of a counterflow, concentric tube in tube heat exchanger in the urine circulation loop between the tank and the evaporator modules.

The disclosure, during the membrane development testing, that the new membrane material was permeable to nitrogen, indicated that the positive volume and pressure required for the proper operation of this cycle tank could not be obtained with these materials. This meant abandoning either the cycle tank design or the new membrane material and returning to cellophane membranes. With NASA's concurrence, the original cycle tank design was abandoned since it was felt that the development of the new membrane material was of greater immediate importance than the use of a pressurized tank.

Consequently, a new cycle tank was designed with the urine heating coil enclosed within the tank and level-sensing probes of an electronic level controller built in. This tank, shown in Figure 9, permits the venting of the gas entrained in the circulating urine after its permeation through the membrane.

Pump Selection

Principal requirements for the pump used to circulate urine through the system included high reliability, good corrosion resistance, the ability to pump entrained gas bubbles without stalling and absolute integrity to leaks. The peristaltic and centrifugal pumps used with the laboratory prototype system were eliminated from consideration since they would both become gas bound due to the collection of entrained bubbles and would not reprime themselves. A review of available pumps resulted in the purchase, testing and eventual inclusion in the system of a stainless steel, sealless, magnetically coupled pump utilizing plastic gears as fluid impellers manufactured by the Micropump Corporation. The model selected is driven by a continuous duty shaded pole induction motor and includes an internal bypass valve for overpressure prevention. Tests indicated that a massive air bubble could cause a single pump to become air bound if the suction head were lost, but that a series combination of two or more pumps would overcome this failing. Accordingly, the system design included three such pumps in series.

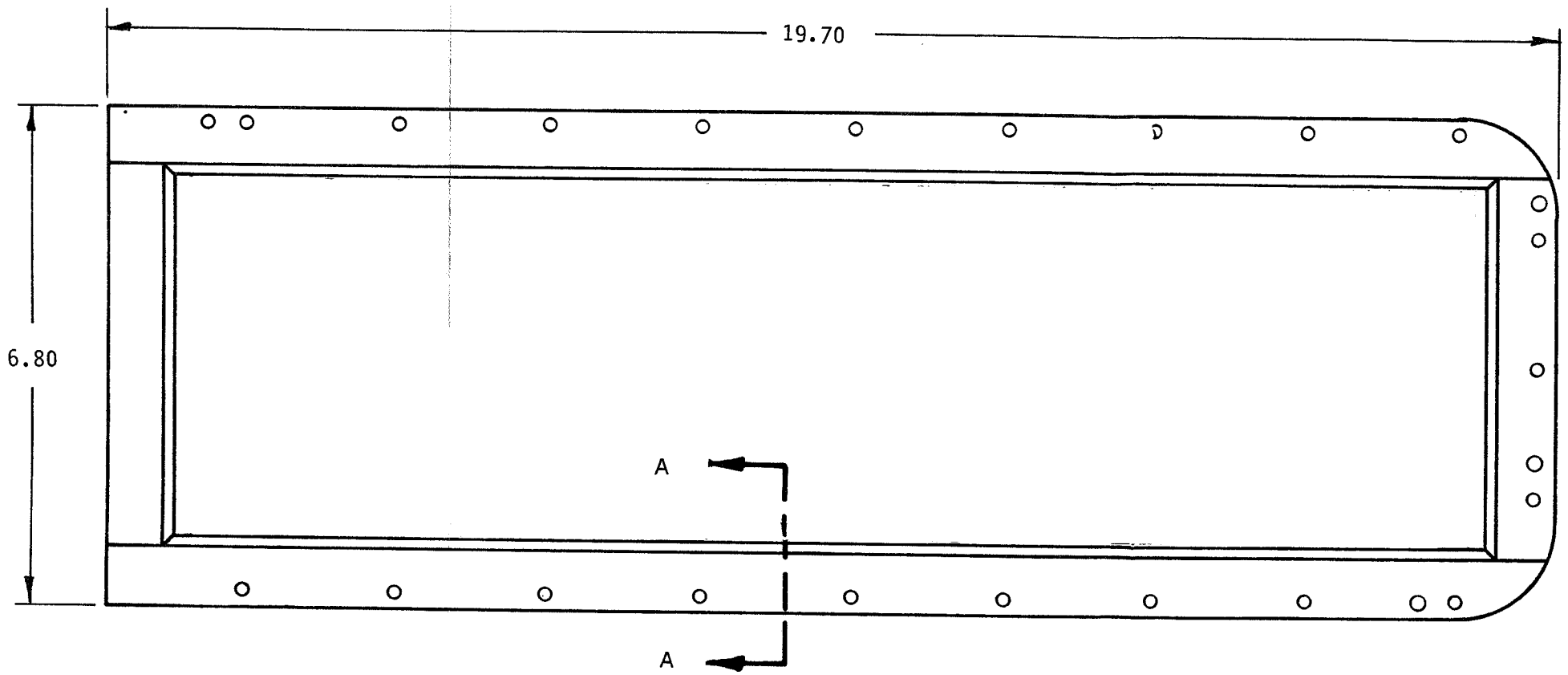

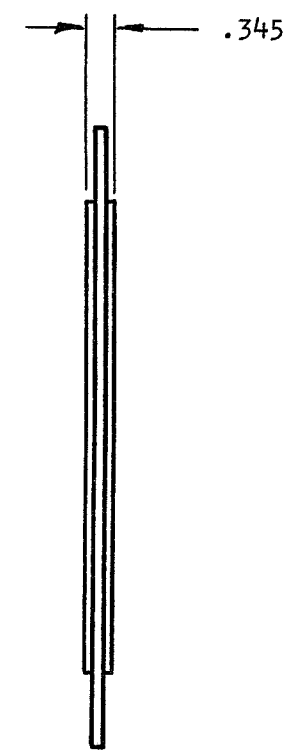

SECTION A-A

CONDENSER MODULE - ORIGINAL DESIGN

FIGURE 7

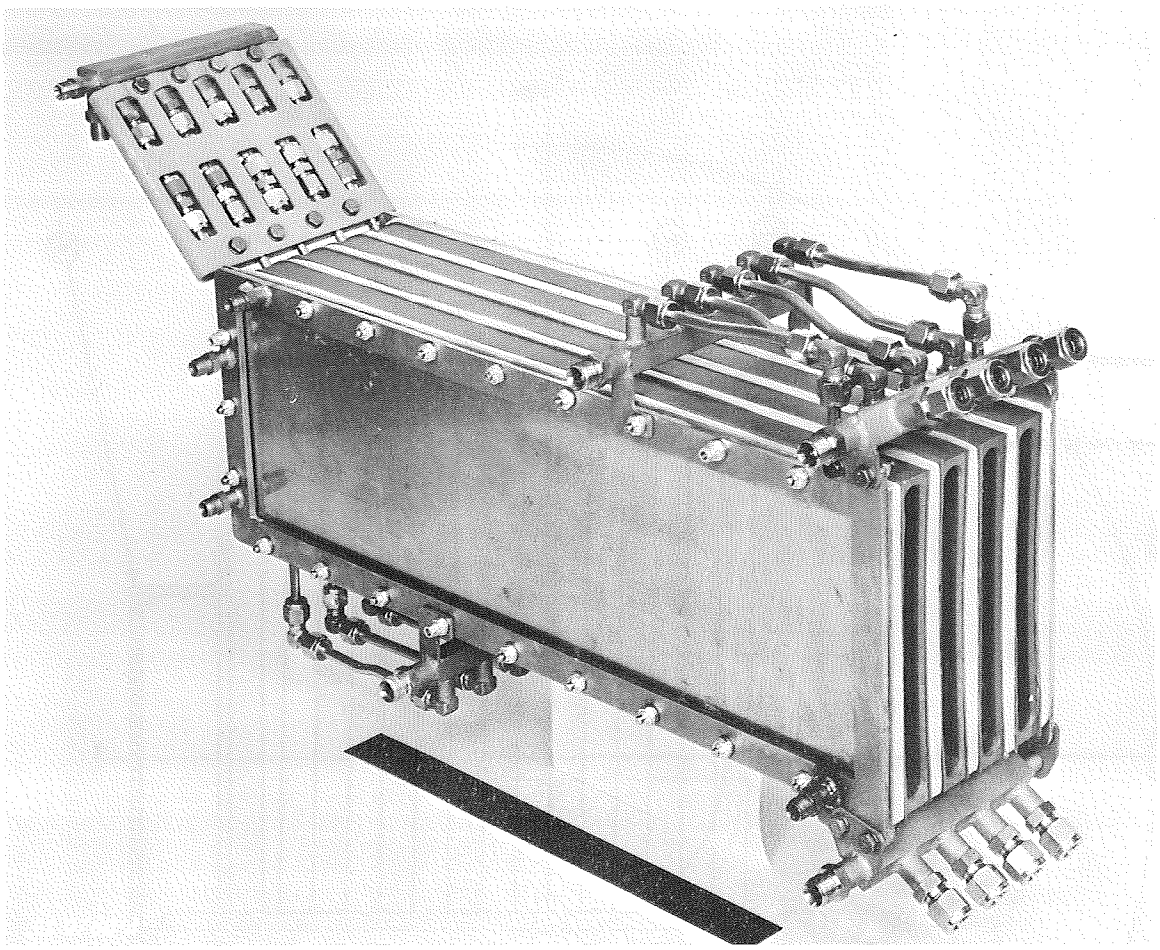

CONDENSER MODULE - FINAL CONFIGURATION

FIGURE 8

Charcoal Canister Design

The charcoal canister designed by Hamilton Standard and used in previously tested water reclamation systems, including the vapor diffusion laboratory prototype system, had proved more than satisfactory and was used unchanged for the flight concept prototype system. The canister is aluminum, lined with epoxy for corrosion resistance and has a fine mesh stainless steel screen bonded across the inlet end of the charcoal section for stray charcoal particle retention. Its 1/4 pound (113 grams) of activated charcoal is sufficient for the final polishing of at least 250 pounds (113 kilograms) of product water or 20 days of operation in a four man system.

Solenoid Valve Selection

Solenoid-actuated valves for each of the fluid circuits of the system were chosen to meet the requirements of the harshest of these circuits, the

Hamilton Standard DIVISION OF UNITED AIRCRAFT CORPORATION

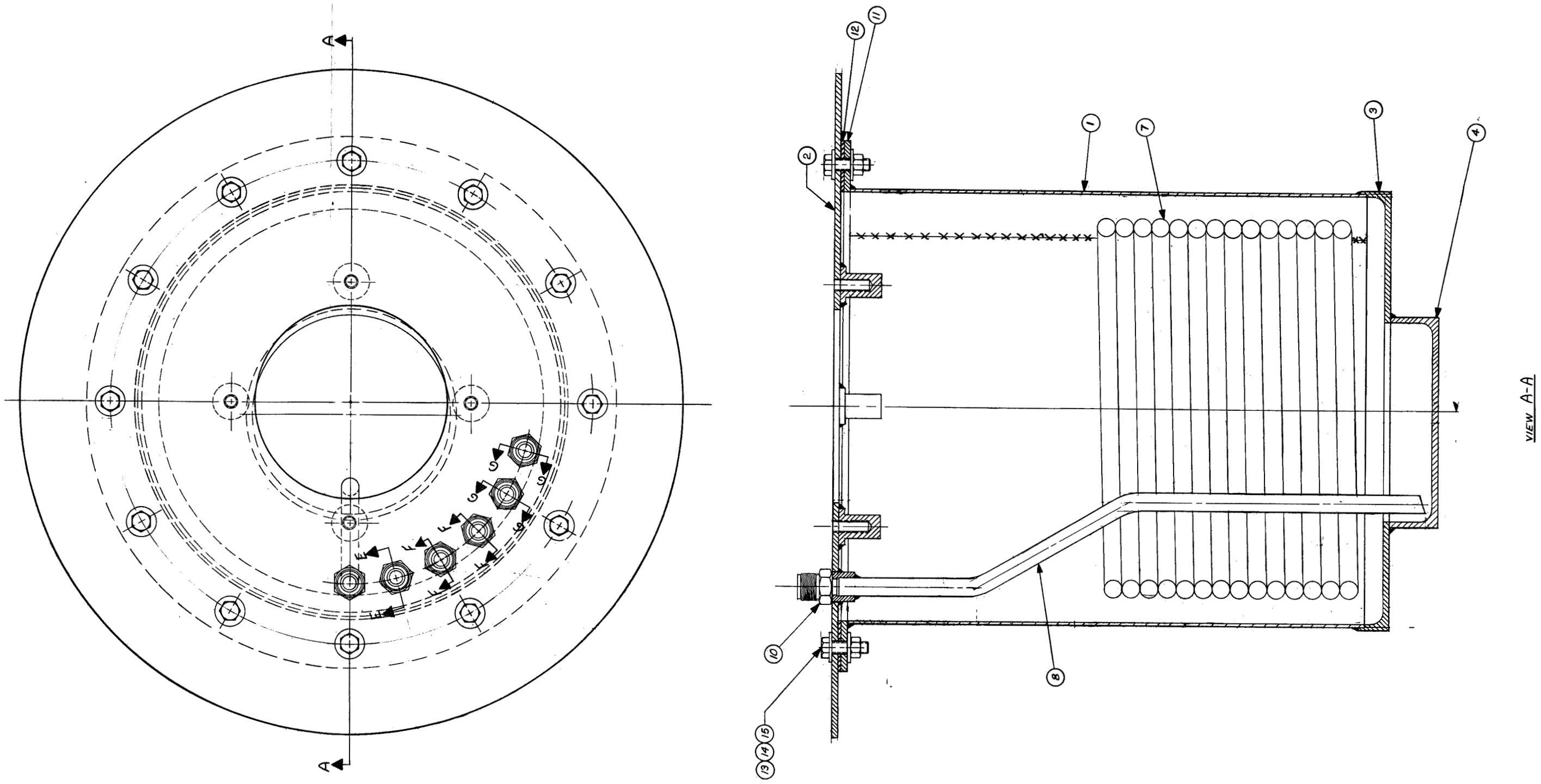

Cycle Tank and Heat Exchanger
Figure 9

circulating concentrated urine. A compact, low power drain series of valves made by the Skinner Electric Valve Co. with only stainless steel and Viton rubber seals in contact with the working fluid was selected initially. These showed a tendency to plug or stick partially open with even quite small particles in the working fluids during preliminary system tests and were replaced with similar Skinner valves in a larger size. The urine solids divert valve, which became inoperative after two urine solids divert cycles, because its operating requirements allowed the precipitation of urine solids on and around its plunger, was replaced with a motor-operated stainless steel ball valve. All the valves utilized operate on 115 volts, 60 cycle power.

Chemical Storage and Injection

The tank used for storing the pretreatment chemical solution prior to its introduction into the collected raw urine was required to provide positive expulsion of the highly corrosive solution in a zero gravity environment. A design originally used with Hamilton Standard's air evaporation water reclamation system in the Integrated Life Support System test program, which utilized a spherical tank and bladder, was modified and resized for use in this system. Modifications included the selection of a more flexible and chemical resistant bladder made from a dispersion of TFE and FEP teflon, the addition of a teflon cap to the tank and the coating of all metallic parts that would come in contact with the chemical in the event of a bladder failure with sintered teflon. The tank was sized to contain sufficient chemical for at least 180 days of operation of the four man system.

Introduction of the pretreatment chemical to the raw urine is accomplished by means of a variable volume manually operated glass-barrelled syringe with teflon plunger and automatic check valve.

In operation, liquid is pumped out of the tank by depressing the injector plunger, delivering a predetermined volume of chemical. The bladder containing the chemical collapses as the liquid is withdrawn, ensuring a full volume charge for the next injection even in the absense of gravity. The injector check valve prevents back flow into the bladder as the plunger is reset for the next stroke. Volume injected may be varied from 0 to 10 milliliters by manual adjustment of the calibrated plunger stroke.

Urine Supply Tank

The tank used to collect and pretreat the raw urine prior to its introduction to the system cycle tank requires a means of positive expulsion to deliver pretreated urine on demand from the cycle tank level control. A rolling diaphragm tank previously utilized with the air evaporation and laboratory prototype VDR systems was modified to provide a more easily read level indicator for use in this system.

Control Circuits

Electrical/electronic circuits for the automated functions of heating and cooling fluid temperature control, product water diversion, urine feed control and urine solids diversion were designed to operate from a single 115 volt, 60 cycle alternating current source in order to simplify the electrical system and enable the utilization of commercially available equipment.

Conductivity sensors and their attendant circuitry used to activate the product water and urine solids divert solenoid valves were designed or selected by the Beckman Instrument Co. to Hamilton Standard specifications. These included a urine solids versus conductivity curve generated in laboratory tests for the urine solids instrument and the selection of a specific sensitivity range for the product water instrument. The two Beckman circuits were repackaged into an enclosure common to all the control circuitry with only minor modifications, reducing their packaging volume by about 50%.

Urine feed and urine solids divert solenoid valves are activated by signals from two separate level control circuits available as off-the-shelf items from the Cole-Parmer Instrument Co. These circuits were also repackaged into the common controls enclosure. A diagram of the total urine solids divert control circuitry and its attendant logic is presented in Figure 10.

A commercial time switch with settable on and off control point contacts to provide automatic operation of the sterilization heat cycle solenoid valves was added to the controls enclosure. Circuits for the control of the heating and cooling fluid divert solenoid valves and a circuit to generate an audible alarm upon activation of the product water divert solenoid valve by the Beckman product water conductivity sensor circuit were designed for in-house manufacture. Diagrams for these circuits (CK 1 to CK 4 on the electrical schematic shown in Figure 11) are included as Figure 12. All four circuits were assembled on a single 3 1/4 by 5 inch circuit board and packaged in the controls enclosure. Toggle switches to provide manual operation, override or isolation of each circuit and lights to indicate the condition of each circuit, all mounted on a single control panel, completed the design of the control circuits.

System Packaging

A unified frame/cover enclosing all of the original system components exclusive of tankage was designed and manufactured with overall dimensions of 11.5 x 11 x 25 inches (29.2 x 28 x 63.5 centimeters) and a total volume of less than 3200 cubic inches (51,800 cubic centimeters). The required additions to the system, disclosed during membrane and component development testing and described in the section on system development necessitated the redesign of the package. These included the increase in size of the evaporator/condenser assembly due to the changes in the condenser frames and heading, the use of larger solenoid valves, the addition of solenoid valves and

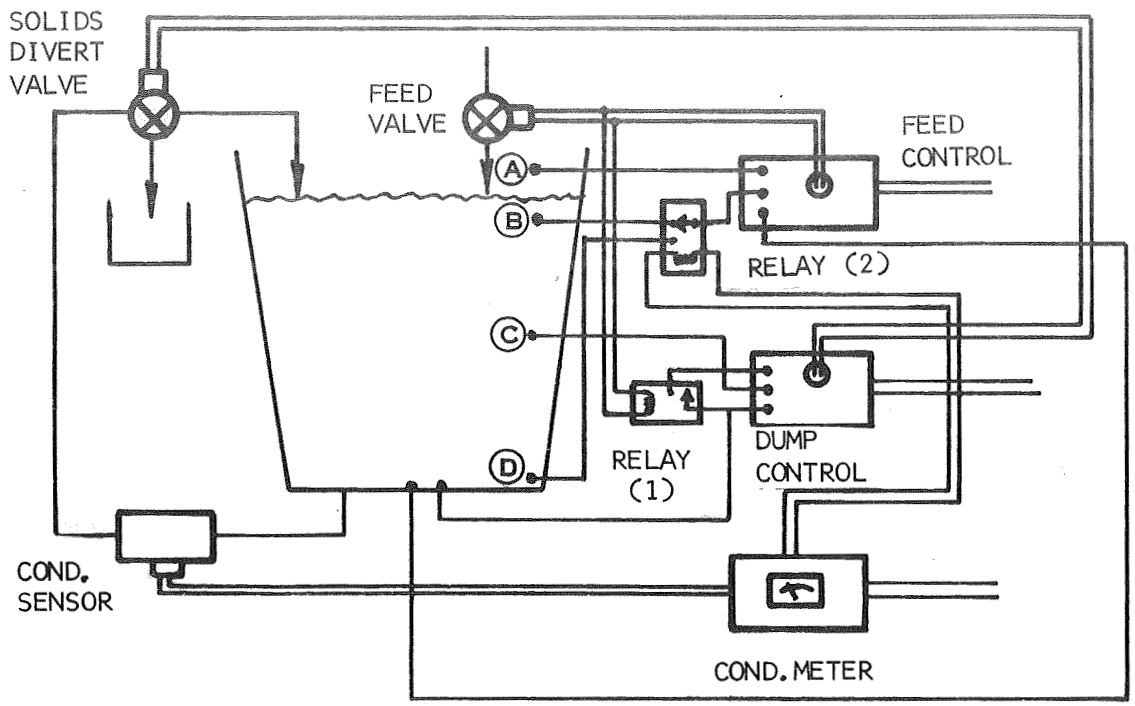

Control Logic:

Start - Tank Full (A)

1 - Process to (B) - signal from feed control activates feed valve, activates relay (1).

2 - Fill to (A) - feed control signal off.

3 - Process to solids = 30% - signal from cond. meter activates relay (2), shifting feed control lower probe from (B) to (D) .

4 - Process to solids = 55% ((C)). Signal from dump control activates solids divert valve, starting dump.

5 - Dump to ullage volume ((D)) - signal from feed control activates feed valve, activates relay (1), cutting off signal from dump control & stopping dump.

6 - Refill to (C) - dump control signal off.

7 - Refill to solids <30% - cond. meter signal off, relay (2) deactivated, shifting feed control lower probe from (D) to (B) , continuing fill.

8 - Fill to (A) - feed control signal off.

SOLIDS DUMP CONTROL DIAGRAM

FIGURE 10

Hamilton Standard DIVISION OF UNITED AIRCRAFT CORPORATION

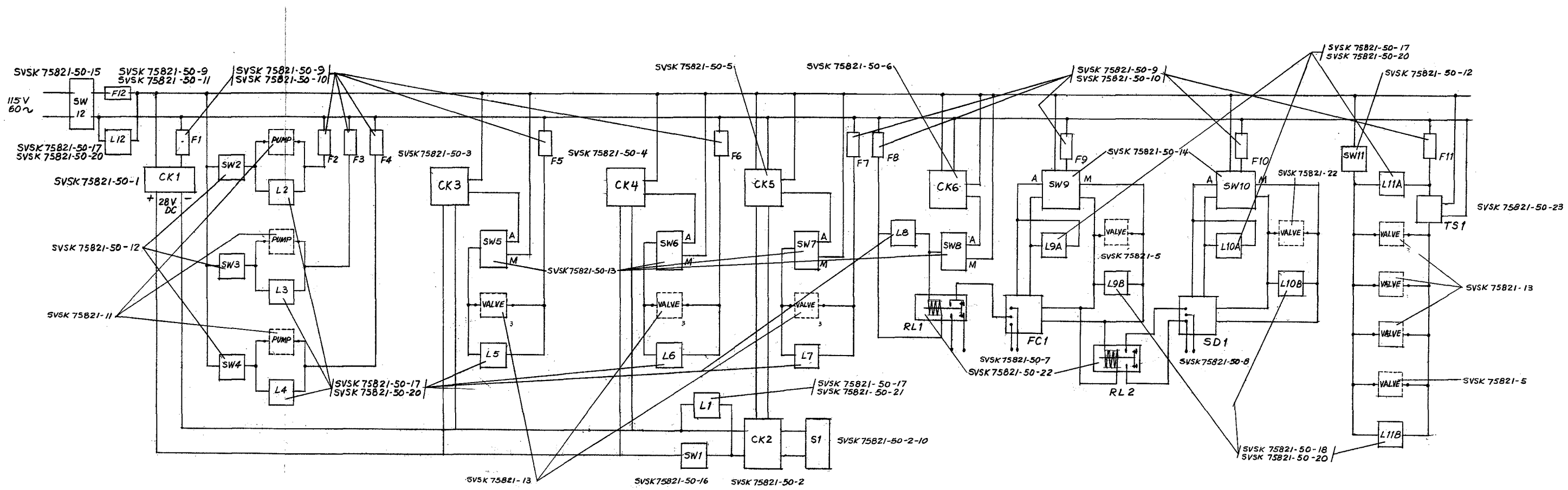

Electrical Schematic
Figure 11

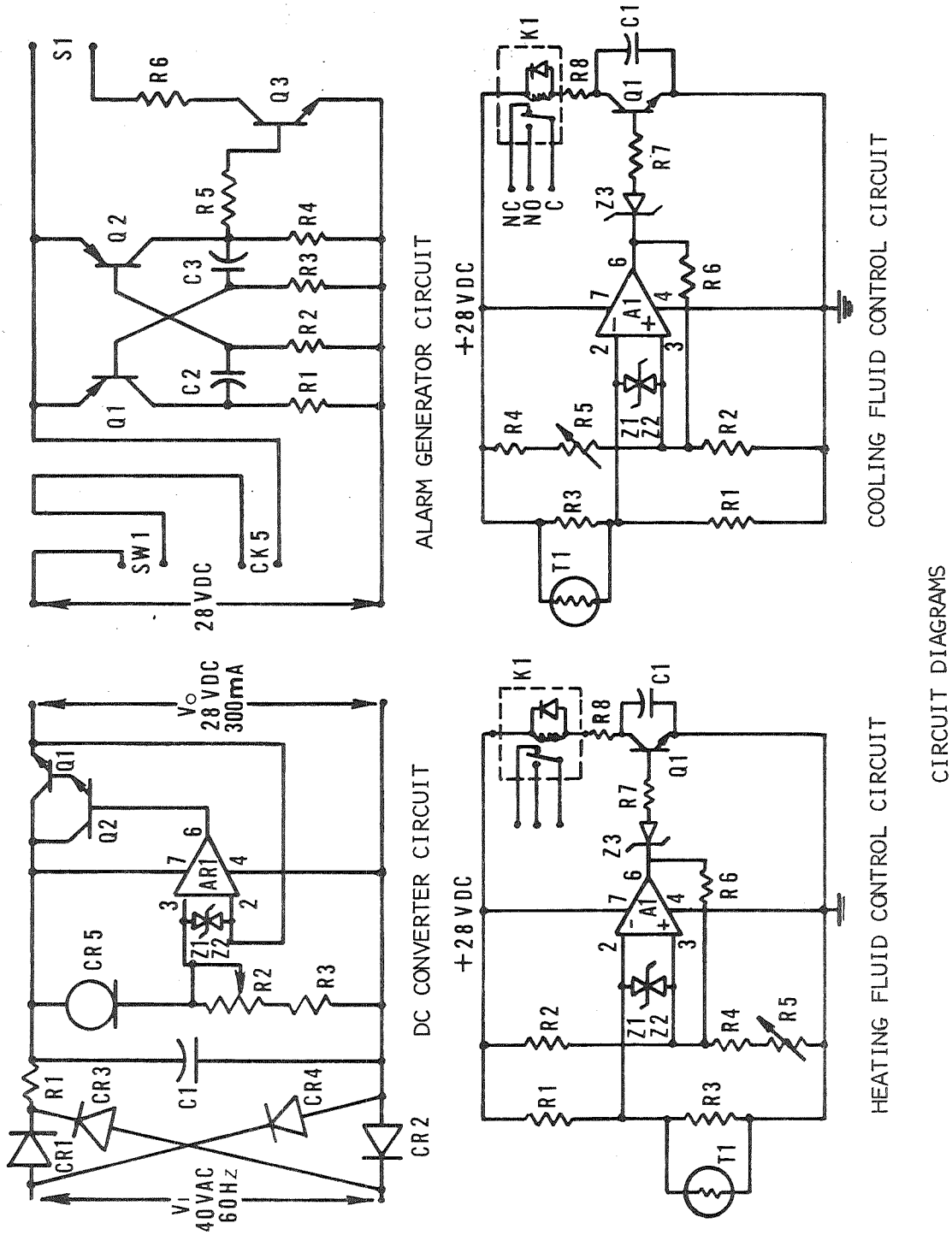
ALARM GENERATOR CIRCUIT
COOLING FLUID CONTROL CIRCUIT
DC CONVERTER CIRCUIT
HEATING FLUID CONTROL CIRCUIT
CIRCUIT DIAGRAMS
28 VDC
+28 VDC
40 VAC 60 Hz
28 VDC 300mA

FIGURE 12

a timer for the heat sterilization cycle, the addition of level controllers and the increase in the number of urine circulating pumps.

The redesigned package, shown in Figure 13, measures 15 x 18 x 43 inches (38 x 46 x 109 centimers) overall with a total enclosed volume of 11,000 cubic inches (0.178 cubic meter).

This large increase in volume was felt to be desirable to permit easy access to the system components during subsequent testing.

The cycle tank, urine supply tank and chemical tank, along with the urine feed solenoid valve and the pretreat chemical injector, were mounted on a single base assembly as shown in Figure 14.

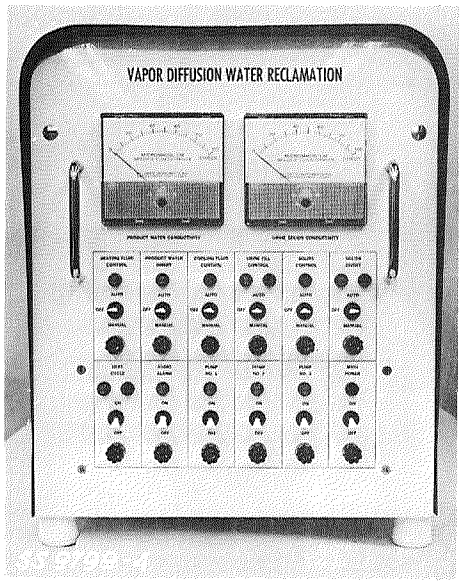

(FRONT)

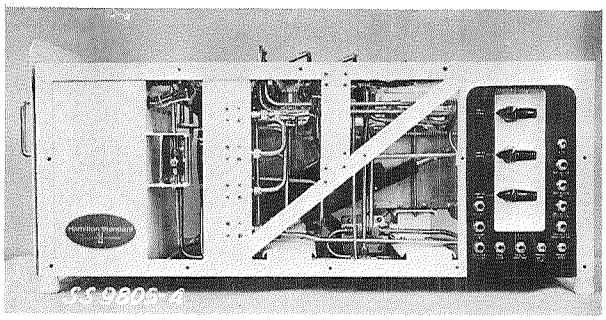

(RIGHT SIDE)

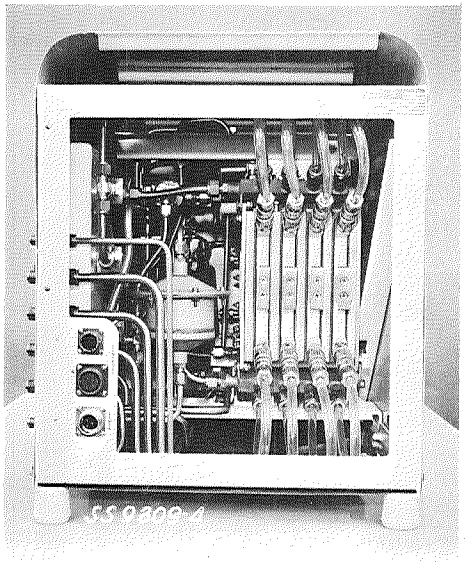

(BACK)

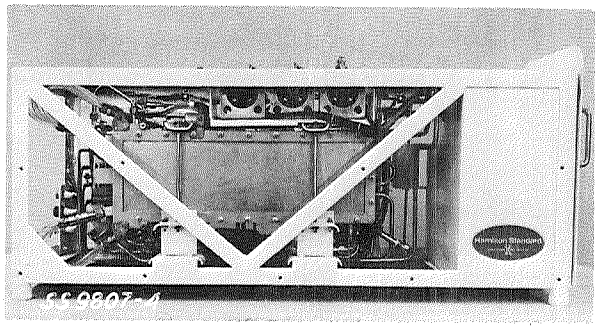

(LEFT SIDE)

FLIGHT CONCEPT PROTOTYPE VDR SYSTEM

FIGURE 13

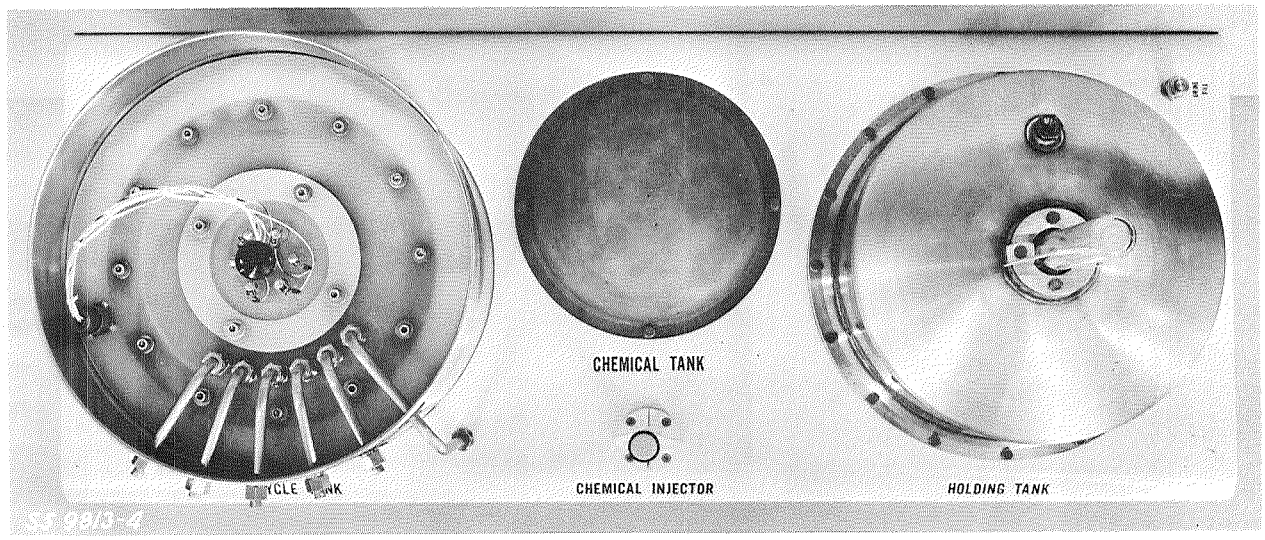

(TOP)

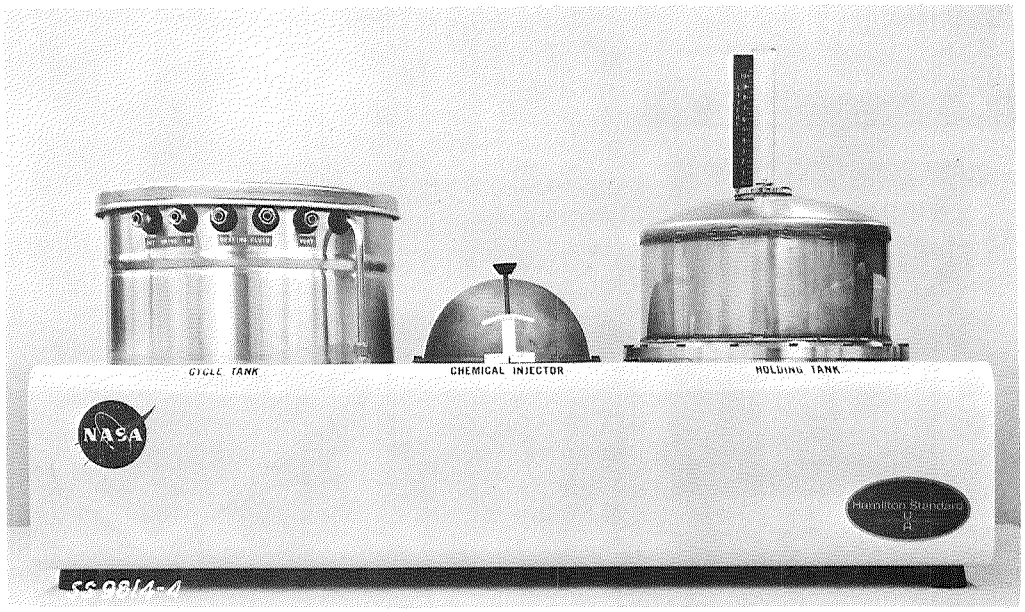

(FRONT)

TANK PACKAGE

FIGURE 14

Component Functional and Design Specifications

Functional and design specifications for the major system hardware components are presented in the remainder of this section.

Evaporator Module

Function.- Provide an easily replaced support for the evaporating membranes and a flow passage for urine utilizing a maximum membrane surface area.

Description.- The evaporator module is a rigid slab of urine resistant material with continuous urine circulation channel paths machined into either side, fed from common points through one end. Membranes are retained in place over each path by metallic flanges with rubber gaskets. Quick disconnect fittings at the feed point provide for leak-free replacement of modules. An O-ring seal prevents the escape of pressurizing nitrogen.

Construction.- Filled Noryl PPO body, silicon rubber gaskets and seal, stainless steel fittings.

Performance and design data.-

Urine flow rate, lb/hr (kg/hr)	40 (18.2)
Maximum urine pressure, psig (gm/cm^2)	4 (280)
Operating temperature, °F (°C)	160 (71)

Condenser Module

Function.- Condense water vapor from diffusion gap to liquid water. Collect and deliver water to collection vessel through a closed system without gas entrainment.

Description.- The condenser module is a double sided porous plate sublimating heat exchanger. Cooling fluid circulated through a central passage maintains a low temperature at the porous plate surfaces to condense water vapor from the diffusion gaps. Gap pressure transfers the liquid water through the porous plates and into the collection lines.

Construction.- Stainless steel flow passages and pure nickel porous plates in a brazed assembly.

Performance and design data.-

Coolant flow rate, lbs/hr (kg/hr)	500 (230)
Coolant pressure, psig (kg/cm^2)	60 (4.2)
Coolant temperature, °F (°C)	40 (4)
Product water flow rate, lbs/hr ft^2	0.5 (35)
Porous plate bubble point, in Hg (cm Hg)	2.5-6.0 (6.35-15.2)

Evaporator - Condenser Assembly

Function.- Maintain proper positioning of evaporator and condenser modules.

Description.- Polyvinyl chloride frames with machined slots for the replaceable membrane modules are used to position and retain the condenser modules. The assembly is retained by stainless steel frames on either side of the condenser - frame stack up with bolts through the entire assembly. Nitrogen gap pressure is provided through drilled holes in the PVC frames.

Construction.- Polyvinyl chloride frames, silicon rubber gaskets, stainless steel retainers, corrosion resistant steel bolts.

Performance and design data.-

Nitrogen pressure, psig (gm/cm^2)	0-2 (0-140)

Cycle Tank and Heat Exchanger

Function.- Provide heat to maintain urine temperature, maintain urine level, dump concentrated sludge.

Description.- An insulated polypropylene tank inside a stainless steel shell. A coil within the tank provides heat from circulating fluid in the coil. Level sensing probes provide for feed replenishment and solids dump through external solenoid valves.

Construction.- Polypropylene tank; urethane foam insulation; stainless steel outer tank, cover, coil and fittings; plexiglas probe cover.

Performance and design data.-

Operating temperature, °F (°C)	160 (71)
Heating fluid flow rate, lb/hr (kg/hr)	500 (230)

Chemical Tank

Function.- Store pretreatment chemical for introduction into raw urine.

Description.- Spherical tank with collapsible bladder.

Construction.- Stainless steel tank, teflon bladder and sealing flange, nylon fittings.

Performance and design data.-

Medium - pretreatment chemical solution (44% H_2SO_4, 11% CrO_3, 45% H_2O)	
Volume, cubic inches (liters)	270 (4.26)

Urine Supply Tank

Function.- Mix raw urine and pretreat chemical, store until introduction into cycle tank. Provide driving potential for feed.

Description.- Rolling diaphragm positive volume tank with level indicating gage. Pressurized gas on back side of diaphragm.

Construction.- Stainless steel tank, silicon rubber/dacron cloth diaphragm, stainless steel and nylon fittings, stainless steel check valve.

Performance and design data.-

Maximum operating pressure (across diaphragm), psig (gm/cm^2) 8 (560)

Item	Function	Design Data	Power
Urine Circulating Pump	Circulate concentrated urine from cycle tank through evaporator modules.	Flow rate (nominal) 160 lbs/hr (73 Kg/hr)	115 V, 60 cycle AC continuous duty
Charcoal Filter	Remove odor forming trace contaminants from product water.	Flow rate (nominal) 1 lb/hr (0.5 Kg/hr) Capacity-1/4 lb (110 grams)	
3-Way Solenoid Valves	Divert heating and cooling fluid flows during off-temperature periods and sterilization cycles.	Flow rate (nominal) 500 lbs/hr (230 Kg/hr)	115 V, 60 cycle AC 4 hours maximum continuous duration
2-Way Solenoid Valves	Feed pretreated urine to cycle tank. Close product water line during sterilization cycles.	Flow rate (nominal) 2 lb/min (1 liter/min)	115 60 cycle AC 4 hours maximum continuous duration
Chemical Injector	Introduce premeasured volume of pretreatment chemical to raw urine.	Variable volume 0 to 10 milliliters	

SYSTEM DEVELOPMENT

Development work on the flight concept prototype system, beginning with the selection of a membrane supplier and continuing through the manufacture, assembly, test and final refurbishment of the system is described in this section.

MEMBRANE DEVELOPMENT

Supplier Selection

The development of an improved membrane material which would exhibit service life, structural and fabricative characteristics superior to those of the cellophane membranes used in the laboratory prototype system was a specific task in this program. Design targets of 500 pounds (226 kilograms) of water processed per square foot of membrane area, a tensile strength of 5,000 pounds per square inch (352 kilograms per square centimeter) and the ability to be bonded or heat sealed were defined in the statement of work.

To fulfill this objective, a specification reflecting the design targets was prepared and submitted to eleven of the country's leading commercial producers of membrane materials with a request for proposals or bids. Most of these manufacturers had been contacted previously during the membrane materials evaluation phase of the laboratory prototype system evaluation contract and had furnished samples of their existing materials for evaluation at that time. Positive responses were received from three suppliers and negative responses from three others. No responses were received from the remaining five suppliers. Telephone contacts with one of these five, the Nalco Chemical Corporation, whose sample of polyvinyl chloride membrane had shown the most promise during the evaluation phase, indicated a lack of interest in any development work or in supplying limited quantities of their existing materials to meet a specification. Nalco was therefore eliminated from further consideration.

The positive respondents and their proposals, were:

The Amicon Corporation of Lexington, Massachusetts, who proposed to modify an existing proprietary material on a reiterative specification basis with guaranteed performance for each iteration. Material formulation and fabrication techniques were to remain proprietary to Amicon.

The Polymer Research Corporation of Brooklyn, New York, who proposed to meet our specification by chemically modifying cellophane. No guarantee or history of similar accomplishments was offered.

The RAI Research Corporation of Long Island City, New York, who proposed to modify polyethylene base materials by radiation cross-

linking with polyvinyl pyrrolidone or polyvinyl alcohol on a best-effort basis with no guarantee of meeting specifications.

Surveys of each of these suppliers to evaluate their facilities, past performance and personnel capabilities were conducted by Hamilton Standard Purchasing and Engineering personnel familiar with the system membrane material requirements. On this basis, purchase orders were issued to the Amicon Corporation for an initial material to the original specification.

Membrane Material Testing

The initial polysulfone membrane material samples received from Amicon were subjected to comparative permeation tests with cellophane membranes as a base line. Two inch (5.1 centimeter) diameter samples of each material were subjected to identical test conditions with urine temperature of 140°F (60°C) and a constant urine head of 9 inches (21.8 centimeters). The fixture used in these tests is shown in Figure 15.

A constant head on the urine supply is provided by the vent tube arrangement in the graduated cylinder as long as the urine level is maintained above the bottom of the tube. Urine temperature is maintained by a flow of hot water in the jacket around the test vessel and measured by the thermocouple just above the mid-point of the membrane sample. Water removed from the urine is evaporated from the exposed membrane surface into the controlled room atmosphere. Its volume is measured by the change in urine level in the graduated cylinder with allowance for the volume of the vent tube. Processing rates of 17.4 milliliters per hour for the polysulfone material and 8.7 milliliters per hour for cellophane were measured. The resistance of this polysulfone material to the chemically treated urine was tested by immersing a sample of the membrane in beakers of the treated urine and of the pretreatment chemical diluted with distilled water to about five times its normal concentration. No degradation was observed by microscopic examination after a one week exposure to both solutions. A full-size, 7 by 10.5 inches, (17.8 x 26.7 centimeters) sample of the material, however, tested in a laboratory prototype system module for twenty days, showed signs of chemical attack and prompted further chemical exposure tests. These consisted of exposures to solutions of the treated urine, the pretreatment chemical and the components of the pretreatment chemical, sulfuric acid and chronium trioxide. The membrane samples exposed to the chromium trioxide solutions exhibited marked changes in the membrane's surface, indicating that the chromium ions released during the concentration of the urine during the twenty day test had indeed attacked the membrane. The polysulfone membrane was eliminated from further consideration for use in the system and a similar structure made from polyvinyl chloride was fabricated by Amicon.

This membrane, designated PVC-N, was exposed to a wider variety of pretreatment chemical and urine solutions and concentrations, including full strength pretreatment, before any additional fabrication or testing was attempted. The PVC-N showed complete resistance to all the pretreatment chemicals and combinations. A full-size sample was prepared and tested for six days in a laboratory prototype module after a two inch (5.1 centimeters)

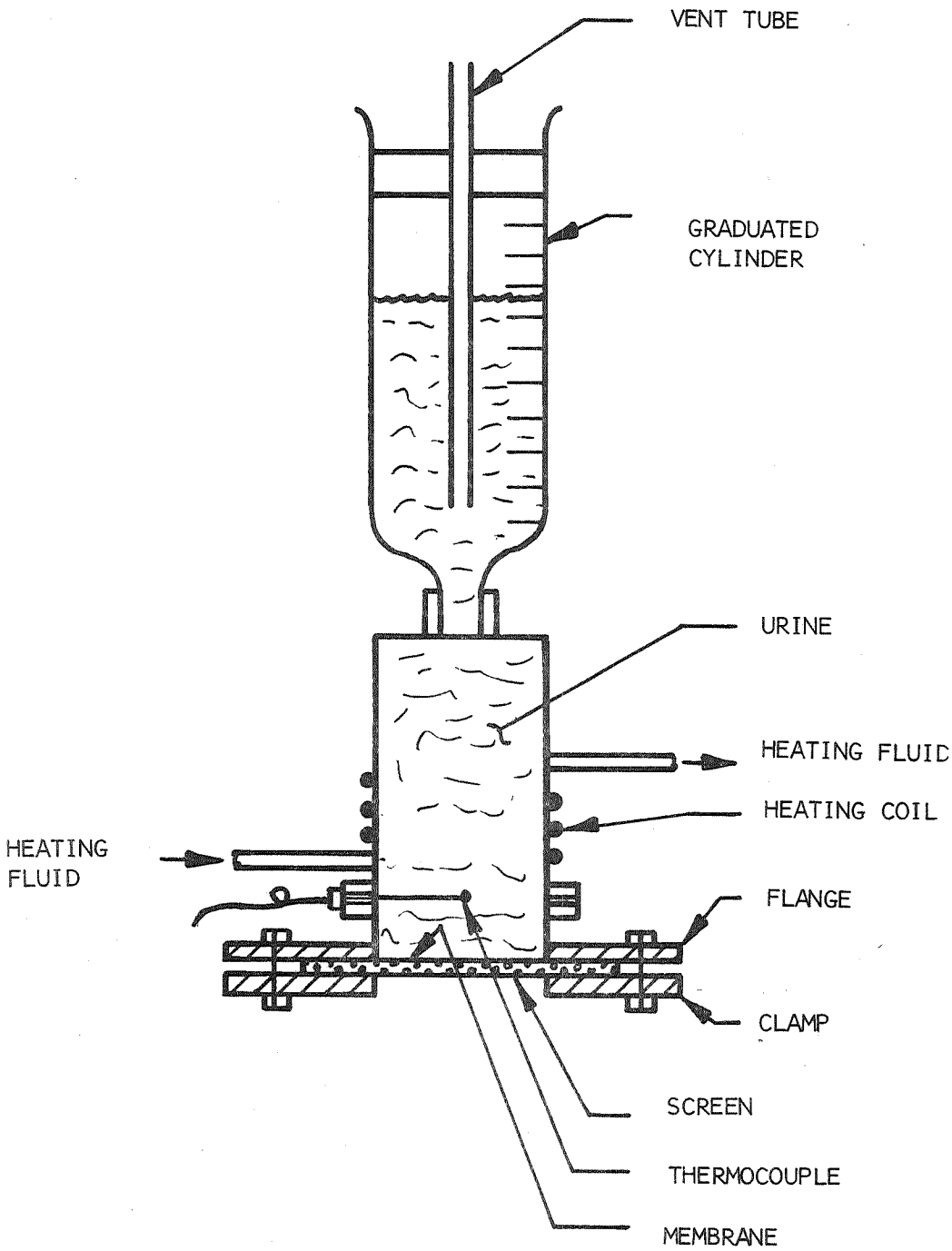

MEMBRANE TEST FIXTURE

FIGURE 15

diameter sample tested in the permeation fixture showed about the same urine processing rate as the polysulfone. Results of the six day test are shown in Figure 16 as plots of processing rate, urine concentration and processed water conductivity versus water processed. Data from the polysulfone membrane test and processing rate for cellophane during similar periods are shown for comparison.

Permeation of the nitrogen gas used in the diffusion gap was observed during the module testing of both the polysulfone and polyvinyl chloride membranes. A rough measure during the PVC-N test, made by collecting the entrained gas over liquid, indicated a permeation of about 0.6 cubic centimeters per minute per square inch of membrane area or a total flow about one-eighth the total urine flow. A second module test of PVC-N with the membrane initially wet and installed in a reversed position (skin side away from the urine) successfully stopped the permeation of nitrogen for the five day duration of the test, but resulted in an increase in conductivity in the product water from an average of 145 micromhos per centimeter for the initial test to an average of 300 micromhos per centimeter. A marked increase in the rate of membrane degradation was also observed, with a decrease in processing rate from about 0.36 pounds per hour per square foot (.18 grams per hour per square centimeter) to about 0.14 after 20 pounds (9.08 kilograms) of water throughput. The initial test with dry PVC-N decreased from about 0.33 to about 0.31 for the same period.

A second generation PVC membrane, designated PVC-P, was module tested for ten days starting dry and in the normal (skin side to urine) position. Nitrogen permeation was measured at about 0.4 cubic centimeters per minute per square inch, a reduction of about one-third from the PVC-N material. A slight increase in the rate of degradation, reflected by the decrease in processing rate from 0.39 to 0.35 pounds per hour per square foot (0.191 to 0.172 grams per hour per square centimeter) for the first 20 pounds (9.08 kilograms) of water processed, was partially offset by the increase in the initial processing rate from 0.33 to 0.39 pounds per hour per square foot (0.162 to 0.191 grams per hour per square centimeter) over the PVC-N membrane.

A seven day module test of the PVC-P material with the urine supply tank pressurized to minimize the pressure differential between the gap nitrogen on one side of the membrane and the circulating urine on the other side was successful in stopping the permeation of nitrogen through the membrane. No significant difference in processing rate or product water quality between this test and the test of the PVC-P membrane with an unpressurized tank was observed. Additional module tests of the PVC-P material, using two membranes in various arrangements and combinations of position and wetness, were run in an attempt to eliminate the permeation of nitrogen into the urine stream without the need for tank pressurization. All combinations investigated proved effective in eliminating the nitrogen permeation but resulted in either a reduction in processing rate to only about 20% of that for a single membrane or a much increased product water conductivity due to the passage of liquid urine through the membrane.

The success of the pressurized urine supply test was considered at this time sufficient to commit the system to polyvinyl chloride membranes, specify

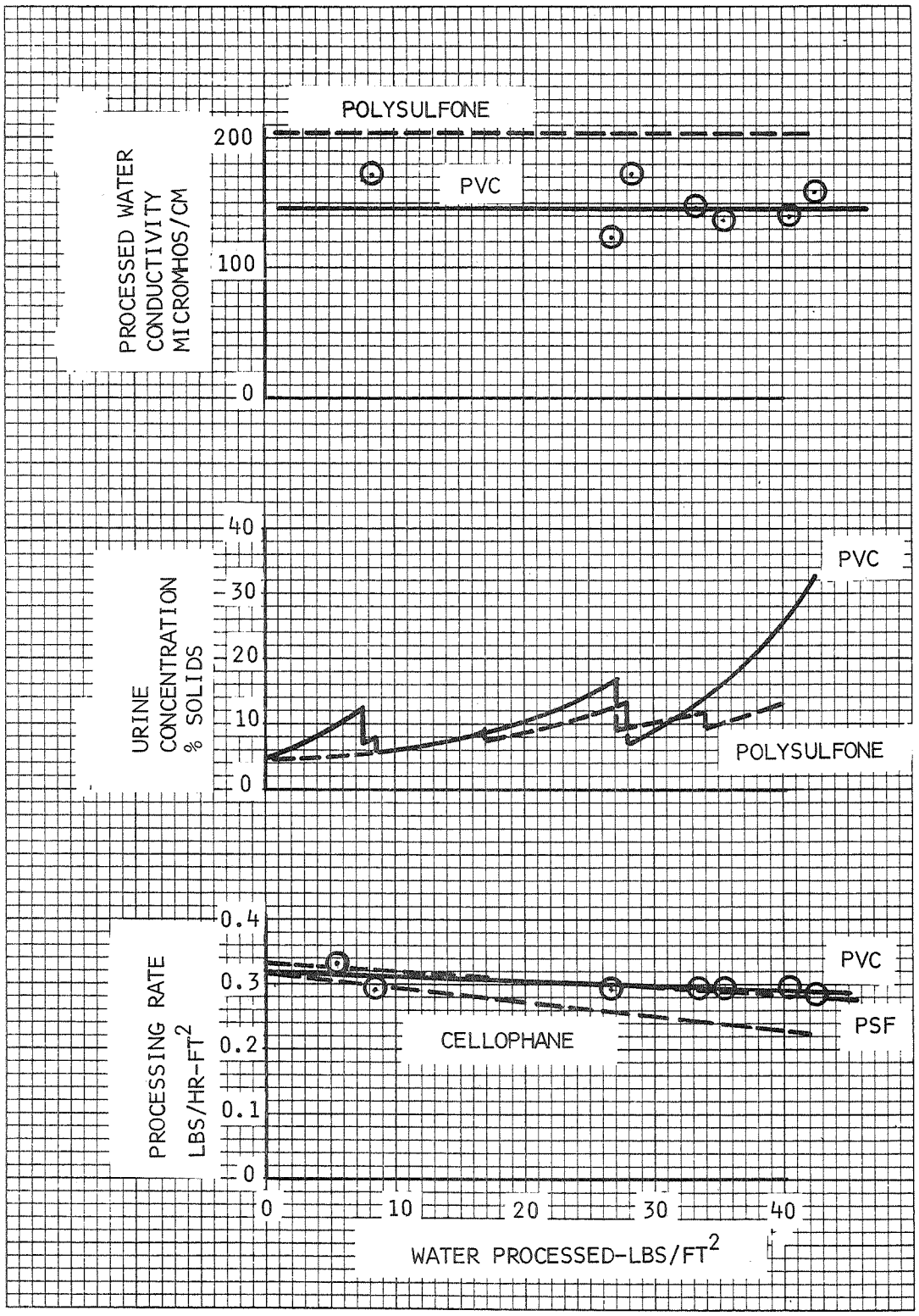

MEMBRANE TEST RESULTS

FIGURE 16

polyvinyl chloride as the material for the membrane evaporator body and begin development of a membrane bonding procedure to be used in the assembly of the membrane evaporator modules.

Membrane Bonding

The bonding of the membranes to the evaporator body, though not a necessary condition to their utility, was desirable in that it could provide a stronger membrane structure by limiting the unsupported span of membrane material to the 0.188 inch (.477 centimeter) between ribs of the body. This arrangement could also eliminate the possibility of contact between membranes and porous plates in the event of a nitrogen pressure or urine pump failure. An additional feature of bonding was the possible elimination of metallic flanges and rubber gaskets from the membrane module assembly. The structure of the membrane precluded the use of heat sealing as a means of bonding, since the temperatures required (in excess of 200°F) were sufficient to destroy the porosity of the membrane. Solvent cements were also ruled out due to their tendency to wick into unbonded areas of the membrane and either plug the membrane pores or create weak spots by dissolving portions of the membrane. A technique utilizing a very small quantity of solvent for both polyvinyl chloride materials and a low heat activation of the solvent was developed by Amicon and Hamilton Standard engineers. This technique required the application of a 2% solution of tetrahydrofuran, a PVC solvent, in chloroform to the evaporator body in the area to be bonded; a drying period of 5 or 10 minutes to permit the absorption of THF into the evaporator body and the evaporation of the chloroform, the positioning of the membrane on the dried body and the application of about 170°F heat to the bonding area by means of an electrically heated plastic bag sealer. While this technique resulted in a bond in only a narrow strip where the bag sealer touched the membrane, and was therefore inadequate for sealing the periphery of the membranes, it did provide a series of spot bonds along each rib of the urine flow channel and served to accomplish the purpose of restricting movement of the membrane by limiting its unsupported span. Evaporator modules were assembled using this technique and the metal flanges and gaskets around the periphery were assembled and leak checked using distilled water. The bonds remained intact and exhibited no leakage under flow conditions attained with the system pumps and under static conditions with 1.5 pounds per square inch (105 grams per square centimeter) of water pressure behind the membrane as might be expected in the event of a pump failure in the pressurized urine system.

MANUFACTURING

The total system manufacturing program involved in manufacture of the following components and subcomponents:

- Evaporator modules
  - Body
  - Flange
  - Gasket
  - Membrane
- Condenser modules

Evaporator housings
Cycle tank
Heat exchanger
Chemical storage tank
Urine supply tank
Frame
Control circuits

and their assembly with purchased, commercially available components, into the final system configuration. All component and subcomponent manufacture with the exception of the condenser modules and the electrical control circuits was accomplished by Hamilton Standard approved suppliers.

The fabrication of the condenser modules was accomplished by the Hamilton Standard shops which had manufactured the original sublimator used as the model for the condenser module design as well as the condenser modules used in the laboratory prototype VDR system.

Manufacturing experiences indicated that the secondary brazing operation required for the connection of the condenser frames to the porous plate core assembly (see Figure 7) would not guarantee a leak-tight assembly due to the unpredictable penetration of the braze alloy into the porous plate and the necessarily uneven edge configuration of the core after the initial braze of the core assembly. Bonding of the frames to the cores, with a minor redesign of the cooling fluid and product water ports to permit the removal of any excess bonding material from the port entries to the core was indicated. A change was made in the frame material from stainless steel to aluminum to simplify machining and to reduce both the overall module weight and the forces due to the frame weight acting on the bond. A secondary bonding operation was added to install stainless steel cover plates in the port channels and compression type tube fittings on the outermost frame.

Manufacturing of the core and frames was accomplished with no difficulty, but the bonding of these components into the condenser assembly proved to be considerably more difficult than anticipated. The bonding material, Scotch-weld 2216, made by the Minnesota Mining and Manufacturing Company, required a heat cycle cure during which the materials became almost water thin for a short period. This thin material showed a tendency to run out of the necessarily narrow space between the core and the frames, leaving voids in the bond. A second bonding cycle proved only partially successful in filling these voids. Considerable effort was required to locate and repair the void areas one at a time for all five condenser modules by manually enlarging and repacking them with bonding material.

The now leak-tight condensers were assembled with the evaporator housings and gaskets into the evaporator/condenser assembly. This assembly, with all of the other originally designed components except the tanks, were then assembled into the package shown in Figure 17. Components were positioned in the frame and connecting tubes cut and bent to fit at assembly. Operational check outs of the various flow loops and electrical components were conducted after assembly to prepare the system for its evaluation test programs.

The electrical control circuits, designed to provide automatic operation of the urine feed, urine solids divert, product water divert and cooling and heating fluid flow control solenoid valves, were fabricated from standard catalog components. The control circuitry, including two temperature control circuits, an AC-DC converter circuit, an audio alarm circuit and a power-switching relay circuit, were mounted on a single four by six inch circuit board. This board, eight control switches, six indicator lights, six circuit fuses and the audio alarm speaker were mounted on a panel about eight by ten inches and enclosed in an aluminum enclosure about two inches deep. The Beckman Instrument Company conductivity control circuits, used in conjuction with the Hamilton Standard designed control circuits, were repackaged into an aluminum enclosure about four by seven by eleven inches (10 by 18 by 28 centimeters). The meters for each conductivity circuit were mounted on a single eight by twelve inch (20 by 30 centimeters) panel which formed the cover for the enclosure.

The two panels were mounted side-by-side on the front surface of the assembly frame with the circuit enclosures inside. (See Figure 17).

TEST PROGRAM

Component Testing

Each of the system components, whether procured as off-the-shelf items, manufactured to Hamilton Standard specifications or manufactured by Hamilton Standard was operationally and/or leak checked prior to its assembly into the system.

The solenoid valves were checked for operation and leakage by plumbing them into the domestic cold water supply at about 40 psig. (2.81 kilograms per square centimeter) Normally closed shut-off valves were leak checked against this pressure and operationally checked by applying the proper operating voltage and observing flow. Three way directional control valves were leak checked against line pressure by capping the normally open port with the power off and by capping the normally closed port with operating voltage applied. Cross-flow leakage was checked additionally under flow conditions for the normally open path with power off and for the normally closed path with power on. All valves performed satisfactorily.

Pump operation, performance and leakage were checked by circulating tap water from a holding tank through a flow meter and flow control valve. Pressure gages in tee fittings at pump inlet and outlet gave differential pressure readings for comparison with the pump manufacturer's flow versus pressure drop curve. All pumps produced curves matching the manufacturer's curve well within the limits of experimental accuracy. An additional test of the pumps to check their ability to pump entrained gas bubbles was made by introducing gas bubbles of varying volume into the suction line and observing whether the pump could maintain its prime. The introduction of a bubble of sufficient volume to totally displace the water in the approximately four foot (1.22 meters) long, 1/4 inch (6.35 millimeter) I.D. suction line was not sufficient to cause loss of prime.

Hamilton Standard DIVISION OF UNITED AIRCRAFT CORPORATION

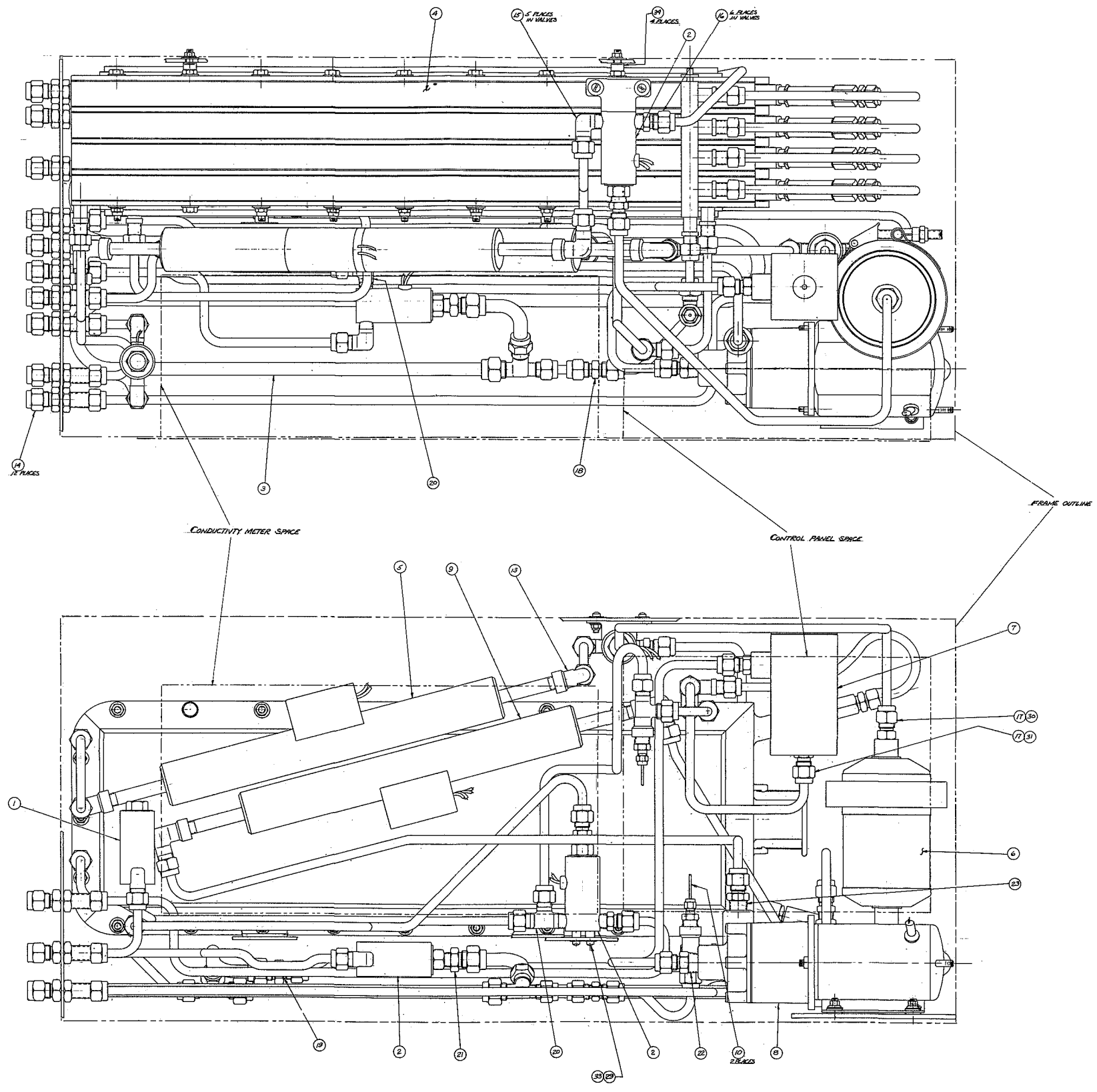

System Assembly - Original Design
Figure 17

The in-line urine heat exchanger was leak checked by capping the urine and the heating fluid flow paths and applying air at a pressure of about 90 psig (6.33 kilograms per square centimeter) to each flow path individually with the heat exchanger submerged in a tank of water. No leakage was observed from either flow path.

The urine cycle tank and the chemical holding tank were leak checked by applying air pressure to the fluid side of the rolling diaphragm and bladder at 8 and 20 psig, (.562 to 1.41 kilograms per square centimeter) respectively. No decay in pressure was observed after a minimum of four hours for either tank.

The condenser module cores were proof and leakage checked prior to the addition of the frames; the cooling fluid chamber with air at 90 psig (6.33 kilograms per square centimeter) and the product water chambers with air at 5 psig; (351 kilograms per square centimeter) both while submerged in water. The assembled modules were leakage checked by the introduction of tap water at 40 psig (2.81 kilograms per square centimeter) at the cooling fluid inlet port with the outlet port capped. The membrane evaporator modules were leakage checked with air at about 1 psig (70.3 grams per square centimeter) while submerged in water. This pressure was to reveal leakage due to membrane faults or poor edge sealing without being affected by the membrane's gas permeability.

The control circuits were operationally checked by applying artificial signals, or, in the case of the temperature control circuits by actually heating or cooling the sensing thermistors, across the signal input terminals and meter checking the corresponding output terminals for continuity and/or signal voltage as indicated.

System Development Testing

The assembled system was similarly checked for leakage and operation by applying domestic water pressure at about 40 psig to each fluid loop in turn, establishing flow and then dead-heading the loop. Flow was established and leakage checked for each possible flow path by manually activating each solenoid valve in the loop under flow conditions. Flow in the urine circulation loop internal to the system package was established by installing a bypass line in place of the membrane evaporator modules. A small amount of external leakage from the cooling fluid loop between components of the evaporator/condenser assembly with the membrane modules installed, which would have no effect on the performance of the system and would have required a major disassembly to repair, was considered acceptable until system disassembly at the conclusion of the 90 day test.

Pump, solenoid valve and control circuit operations were checked with the system filled with distilled water in place of urine and the membrane module bypass installed. Artificial or manual activating signals were applied and component operation visually observed.

The leak and operationally check system was prepared for its initial evaluation by installing four evaporator modules with membranes bonded as previously described, and filling the urine cycle tank with pretreated urine. Urine was introduced to the modules with the gap pressure at about 5 inches (12.7 centimeters) of water by installing the urine quick disconnects to one module at a time with the urine circulation pump primed and running. Gap pressure was then increased simultaneously with the application of cycle tank pressure until the gap pressure reached about 11 inches (28 centimeters) of water, the minimum necessary to pump the product water out of the system. Cycle tank pressure was then increased gradually until nitrogen permeation through the membrane stopped, as indicated by the disappearance of bubbles in the outlet urine stream. Cycle tank pressure at this point was 74 inches (1.88 meters) of water. A 24-hour test at these conditions resulted in the production of water of extremely high conductivity, increasing from 340 micromhos per centimeter at the outset to 2600 at conclusion. Removal of the membrane modules indicated that the membrane-to-evaporator-body bonds had come loose, permitting the membranes to sag across the diffusion gap and contact the condenser porous plates. In a few cases, the loosening of the bonds had produced pin-point leaks in the membrane which permitted leakage of urine into the gap. These leaks were also the reason for the high cycle tank pressure required to offset the nitrogen permeation through the membranes since the nitrogen was flowing through the pinholes and not permeating through the pores. Investigations showed that the bonds had been broken by the action of residual solvent in the evaporator body, reactivated by the heat of the circulating urine.

To eliminate this problem, the membranes were removed from the evaporator bodies and the bodies outgassed for a period of twenty hours in a vacuum chamber to remove all traces of residual solvent. A subsequent test of an outgassed body, with a sheet of membrane material held in intimate contact with the body during an eight hour heat soak at about 160°F, (81°C) showed no further transfer of solvent. New membranes were installed on four bodies and the porous plates of the condenser modules backflushed with distilled water through the product water line in preparation for the restart of the evaluation test.

The system was primed in the manner described above, with a gap pressure of 10.5 inches (26.7 centimeters) of water requiring 37 inches (94 centimeters) of water pressure at the cycle tank to offset the nitrogen permeation. These pressures were increased on the second day of the test to 13.8 and 39.5 inches (35 and 100 centimeters) of water, respectively, when it became evident that the process water was not being pumped out of the system at a rate consistent with the production indicated by temperature drops in the system. Product water rate subsequent to the increase in pressure was 0.85 pounds (386 grams) per hour with urine temperature of about 100°F (48°C) and cooling fluid inlet temperature of 62°F. (16°C) A steady increase in nitrogen permeation through the membranes resulted in the disconnecting of one module when its urine flow was reduced to practically zero by the high gas flow. Processing rate on the fourth day was 0.58 pounds (264 grams) per hour with only three modules on line. Urine circulating pump failures, due to excessive nitrogen in the outlet line, prompted the replumbing of the urine loop to install a bypass loop and flow meter between the cycle tank and the module

outlet header to ensure maintenance of circulating pump prime. A continuing increase in nitrogen permeation resulted in the disconnecting of a second module on the fifth day. Process water conductivity increased at this time to over 3000 micromhos per centimeter. Rate with two modules on line was 0.36 pounds (130 grams) per hour. The test was discontinued on the sixth day when nitrogen permeation continued to increase and conductivity exceeded 4000 micromhos per centimeter. Removal of the membrane modules indicated that the membranes had again bagged out sufficiently to contact the porous plates and transfer urine solids into the product water stream even though the membranes remained intact.

At this point, there appeared to be no feasible way to prevent the permeation of nitrogen into the urine stream and its resultant loss of pumping prime while maintaining the pressurized cycle tank in the system. The use of a positive-displacement pump would ensure the maintenance of urine flow in all but the most extreme cases of nitrogen permeation. The entrained nitrogen, however, would prevent the operation of the pressurized cycle tank which depended on a homogenous, gas-free volume of liquid for feed and solids divert control. The alternatives consistent with the completion of the proposed testing within the limits of the original contract schedule and funding were either to abandon the PVC membrane material and test the system with cellophane or to abandon the pressurized tank design. With NASA's concurrence, it was decided to pursue the PVC membrane material as far as possible and complete the test with an unpressurized urine tank.

A stand-pipe separator was installed in the urine return line between the pump and the cycle tank and the centrifugal urine pump replaced with a gear pump. Start up of the system in the manner previously described, but with no gap pressure, was readily accomplished, but urine circulation was reduced markedly by nitrogen permeation once gap pressure was applied. The reduced urine flow was not sufficient to maintain an acceptable processing rate. To reduce nitrogen permeation and increase urine flow, the system was replumbed to minimize the pressure drop in the circulating urine from the cycle tank to the membrane module. The in-line urine heat exchanger was replaced by a heating fluid coil in a vat-type cycle tank and line and fitting sizes increased. A new, tighter-structured membrane was produced and a pre-wetting procedure to fill the membrane pores with water and prevent or reduce the permeation of nitrogen was developed. A PVC coated fiberglass screen of about 18 mesh was installed behind the membranes to prevent the collapse of the membrane into the urine flow passages. These changes, combined with the use of three gear pumps in a parallel-flow arrangement, resulted in a much-improved urine flow. A backflush of the porous plates with distilled water disclosed that the porous plates had become partially clogged during the testing recently completed. An investigation revealed the presence of precipitated aluminum hydroxide in the product water chambers adjacent to the porous plates, most likely generated by galvanic action between the exposed porous plate and aluminum frame surfaces during the evaluation tests when urine solids were transferred into the diffusion gap. Since there was no guarantee that such an event would not re-occur, the aluminum frames were removed from the condenser modules, stainless steel tubes brazed to each condenser core's cooling fluid and product water ports,

and frames of filled polyester resin cast onto each core. The stainless steel cooling fluid and product water tubes were headered externally after assembly of the condenser modules and evaporator housings. The modifications to the condenser resulted in an increase in diffusion gap width from 0.1 to 0.22 inch, which theoretically has the effect on reducing processing rate by about one third. Calculations are shown in Appendix D.

System Evaluation Testing

The system was reassembled with all components removed from the original frame since the modifications to the evaporator/condenser assembly left inadequate space for any maintenance work that might be required during the system evaluation testing. The larger size solenoid operated valves were also installed at this time. New membrane evaporator modules were installed and the system evaluation tests indicated in the NASA-approved test plan (Appendix A) begun.

The initial test, designed to provide data to optimize the urine flow rate through the modules, was run with distilled water in place of the urine in order to eliminate the effects of urine solids concentration and membrane degradation. Urine circulation rates were varied from about 40 to 120 pounds (18 to 55 kilograms) per hour and resulted in processing rates (normalized for changes in evaporator inlet temperature) from about 0.6 to 1.1 pounds (272 to 500 grams) per hour. Results are shown in the plot of Figure 18 which indicates that the processing rate is asympototic to 1.1 pounds (500 grams).

At the conclusion of the urine flow optimization test, the process water loop, including the condenser porous plates and the diffusion gap surface were flushed for a four hour period with a 1% solution of hydrogen peroxide in preparation for the bacteria resistance tests. The product water charcoal canister was sterilized by baking in dry heat at 350°F (177°C) for four hours. The membrane evaporator modules were installed and the system operated with distilled water. Water samples taken after twenty two hours of operation showed no bacteria in the cycle tank or in the process water lines upstream and downstream of the charcoal canister. Samples taken after sixty eight hours of operation showed no bacteria in the cycle tank, but revealed concentrations of 3000 and 1800 colony forming units per milliliter in the process water line upstream and downstream, respectively, of the charcoal canister. These results indicate that the backflush with a 1% hydrogen peroxide solution was not completely effective in sterilizing the process water loop.

At this point, pretreatment chemical in the normal four milliliter per liter concentration was added to the distilled water in the cycle tank with the system running. Solutions containing about 3.24×10^{10} Pseudomonas Aeruginosa and 1.08×10^{11} Alcaligenes Faecolis were added to the cycle tank. Water samples were taken for bacteriological analysis from the cycle tank and the product water lines after intervals of 4, 24 and 48 hours from the introduction of the bacteria. An evaporator was then removed from the

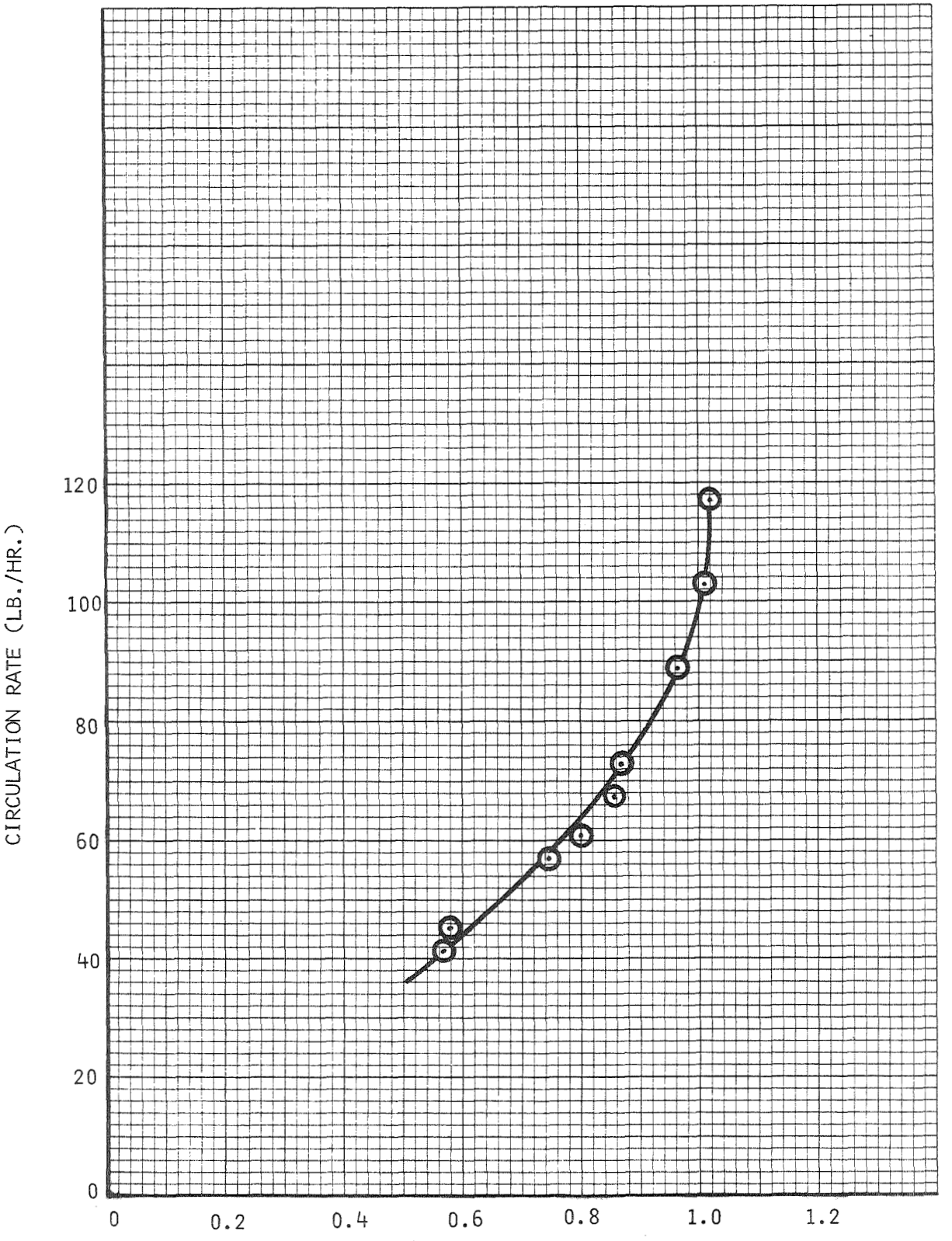

PROCESS WATER RATE (LB./HR.)
PRELIMINARY TEST RESULTS

FIGURE 18

system and both membrane surfaces coated with a solution containing 6×10^8 colony forming units per milliliter of the same bacteria. The evaporator was replaced in the unit and the test run continued. Product water samples were taken at intervals of 4, 24 and 48 hours from the time of the surface coating. Since sampling results at this time indicated a high growth rate of bacteria in the charcoal canister, the canister was removed and two additional product water samples taken at intervals of 1/2 and two hours after its removal.

Sampling results are tabulated in Table 1. None of the bacteria detected were of the types introduced to the cycle tank and smeared on the membrane, indicating that the system effectively prevents the transfer of bacteria from the urine loop or membrane surfaces to the product water. The bacteria detected could only have been those in the product water lines prior to the introduction of the test bacteria, growing in the charcoal canister. This is substantiated by the increasing counts downstream of the canister throughout the test and the rapid decrease in the counts after removal of the canister.

A rapid decline in processing rate after the introduction of the test bacteria to the cycle tank was traced to a decline in urine flow rate caused by a buildup of bacteria on the 100 mesh particle filter on the urine outlet line in the cycle tank. Investigation revealed that some of these bacteria were still alive, even in a solution that showed no living bacteria probably because they were shielded from the action of the pretreatment chemical and held immobile by their dead counterparts. Urine flow and processing rate were restored by the removal of the filter.

At the conclusion of the bacteria resistance test the urine and product water loops were flushed with a 3% hydrogen peroxide solution for twenty four hours. The bacteria coated membrane module was then replaced with a new module, the system filled with pretreated urine and operation resumed. Gas permeation was noted to have increased markedly in the three membrane evaporator modules flushed with hydrogen peroxide, with the result that the maximum urine flow attainable was only 80 pounds (36.4 kilograms) per hour. Operation at this flow for 72 hours resulted in the production of good quality water at a rate only about half that predicted by the earlier flow optimization tests. Collection of product water from individual modules revealed that the newly installed module, which was not exposed to the hydrogen peroxide, was producing about 53% of the total at a rate corresponding to that predicted by the flow optimization tests. Removal of the three evaporator modules flushed with hydrogen peroxide, their rewetting by the soaking process and reinstallation resulted in the restoration of both urine flow and water processing rates.

90 Day Continuous Run Reliability Test

A 90 day continuous run test, designed to demonstrate the system's feasibility and to provide a measure of the required maintenance effort, was performed as described in this section.

TABLE 1

PRELIMINARY TEST BACTERIA ANALYSES

Time	Bacteria In Cycle Tank (CFU/ML)	Bacteria Ahead Of Charcoal Filter (CFU/ML)	Bacteria In Downstream Of Filter (CFU/ML)
Immediately before adding pretreat & bacteria	Zero	3000	1800
4 Hours after adding bacteria	Zero	1800	320
24 Hours after adding bacteria	Zero	140	730
48 Hours after adding bacteria	Zero	600	3900
4 Hours after wiping bacteria on membrane	Not Taken	360	28000
24 Hours after wiping bacteria on membrane	Not Taken	795	16000
48 Hours after wiping bacteria on membrane	Not Taken	1380	323000
48 1/2 Hours after wiping bacteria on membrane & 1/2 hour after removing charcoal filter	Not Taken	290	Not Applicable
50 Hours after wiping bacteria on membrane & 2 hours after removing charcoal filter	Not Taken	150	Not Applicable

Test Description

The system 90 day reliability test was conducted according to the test plan shown in Appendix A with minor changes as described below. The test set-up is shown schematically in Figure 19 and as physically arranged in Figure 20. It consists of the system as developed for and from the evaluation tests with the addition of the sterilization heat cycle valves and timer, heating and cooling fluid supply and circulating equipment, a nitrogen supply and instrumentation. Recording instruments were utilized to provide continual records of system temperatures, urine loop pressures and product water and urine conductivities. All other system operating parameters, as well as product water volume and quality, were manually recorded at regular intervals on test data sheets. (Appendix B)

The sterilization heat cycle was designed to provide a means for the on-line sterilization of the system by increasing the temperature in the product water passages for a predetermined period of time sufficient to kill any bacteria left in the product water loop after initial sterilization, as had occurred in the system evaluation tests. This was accomplished by diverting the circulating heating fluid from its inlet to the urine heating coils to the condenser cooling fluid inlet, through the condenser, and from the condenser cooling fluid outlet back to the heating fluid supply. The circulating cooling fluid was diverted from the condenser inlet back to the cooling fluid supply. In this manner, no interruption in operation was required. A shut-off valve was also provided in the product water delivery line to prevent the drying out of the product water chamber during the sterilization cycle. Use of the sterilization cycle was proposed for two hours each day if and when product water samples showed excessive bacteria counts with suspension of the cycle when counts returned to acceptable levels.

Urine was collected for the 90 day test from a group of 42 volunteer donors who submitted mid-stream samples of their urine for medical analysis by a state licensed laboratory after a preliminary screening by a Hamilton Standard medical staff physician. Urine was collected by way of direct micturation into a polyethylene funnel with a tygon tubing connection through the top of a cabinet type refrigerator to two gallon polythylene bottles stored in the refrigerator. The arrangement is shown in Figure 21. Sufficient pretreatment chemical for three liters of urine was manually introduced to the collection bottles before use and additional pretreatment chemical introduced manually to each filled bottle to provide the normal pretreatment chemical concentration of four milliliters per liter. The filled bottles were stored in the refrigerator until introduction into the system supply tank. This collection and storage method provided a urine supply most nearly approximating that of an actual system by minimizing the possibilities of urea breakdown and contamination from external sources.

New membrane modules were assembled and pre-soaked prior to their installation in the system for the 90 day test. An attempt to prime the evaporator modules as in previous tests with the three urine circulating pumps in parallel resulted in the permeation of sufficient nitrogen through the membranes to cause an unacceptably low urine flow and eventual loss of pump prime.

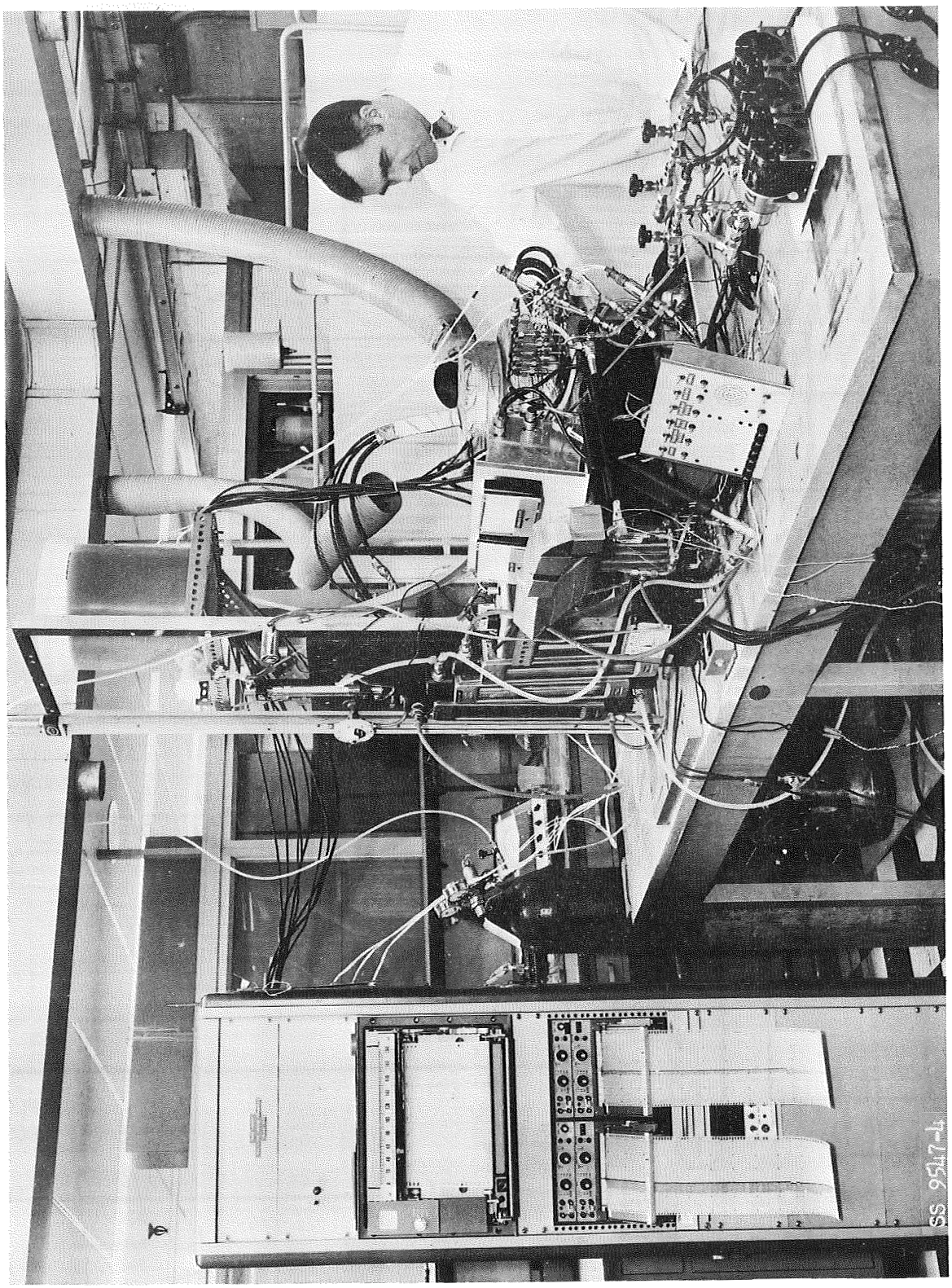

90 Day Test Set Up

Figure 20

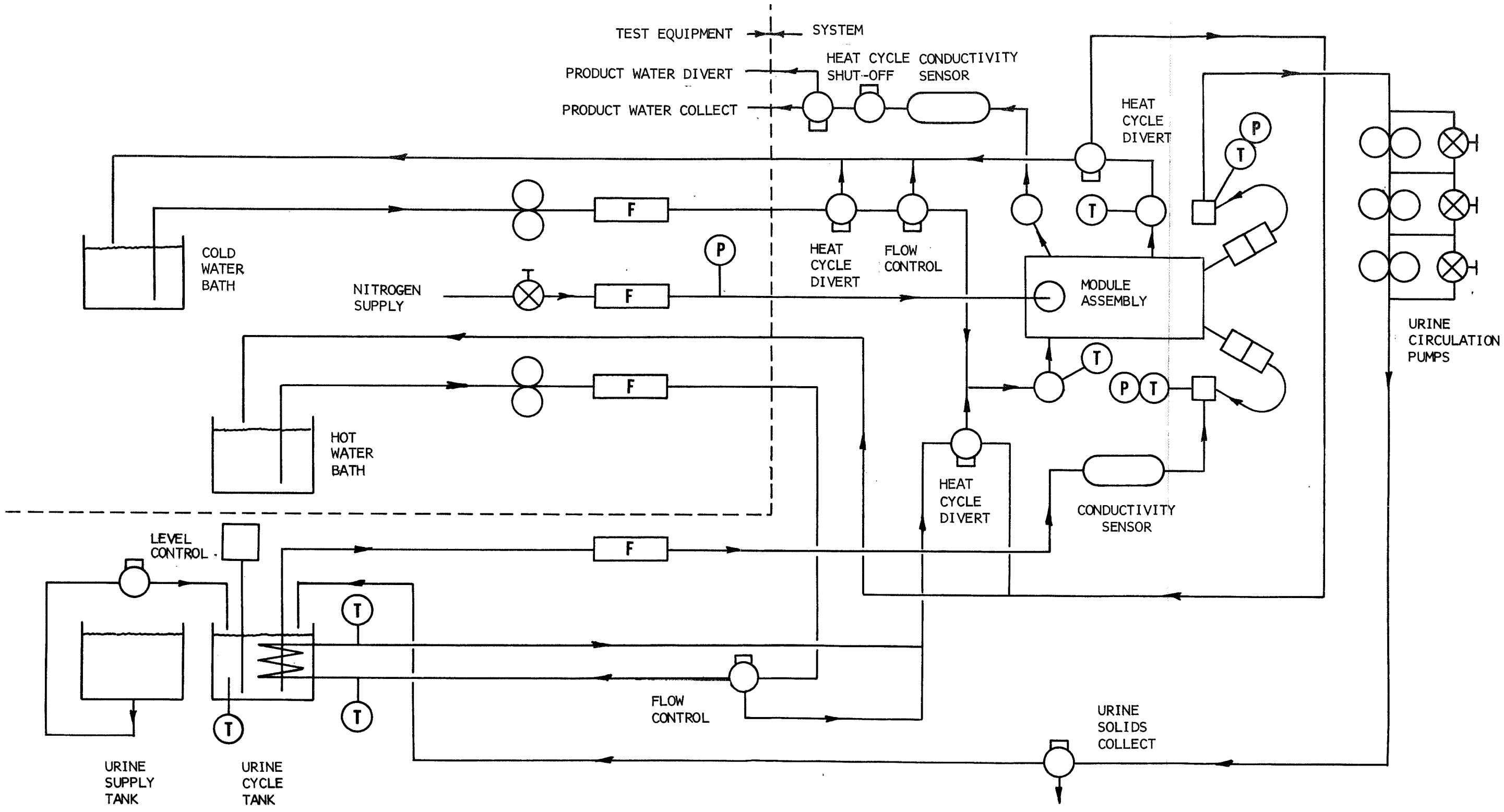

90 DAY TEST SET-UP SCHEMATIC
FIGURE 19

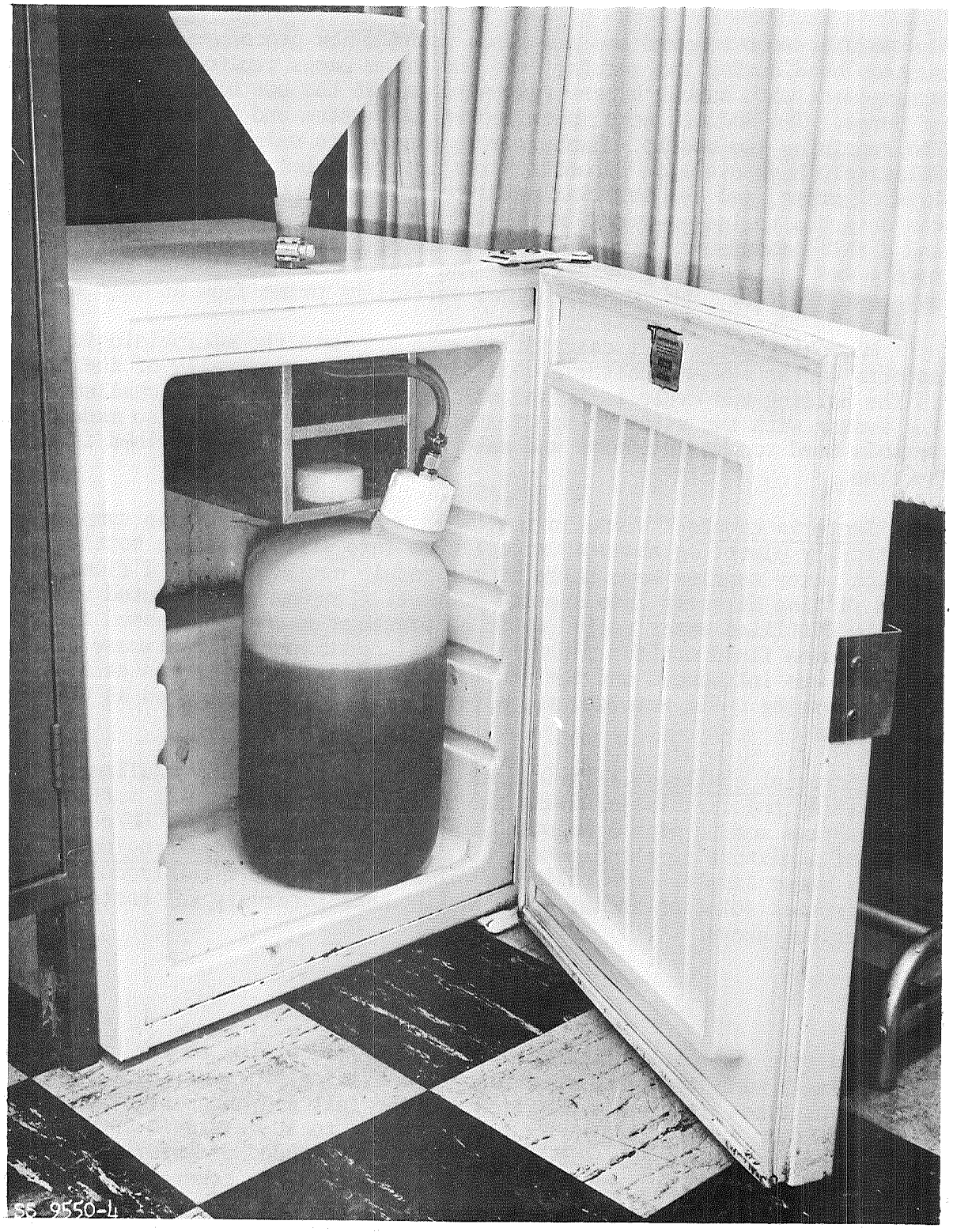

Urine Collection Set Up

Figure 21

The modules were removed and resoaked, using a new procedure providing more suction head during the soaking, and the urine pumps replumbed into a series arrangement with manual bypass valves to permit the use of any combination of pumps. Two modules were installed in the system and primed as before. The remaining two module chambers were plugged to maintain gap pressure. Relatively high nitrogen permeation was observed, but not sufficient to cause loss of prime, and the test was permitted to continue. Nitrogen permeation was observed to lessen with time as indicated by an increasing gap pressure, and a third module was successfully installed after two days. The final module was installed on the next day and the elapsed time count for the 90 day test started. Two pumps provided sufficient urine flow at this time.

Microbiological test description.- To evaluate the microbiological aspects of the system, bacteria counts were made periodically of the urine in the holding and cycle tanks and of the processed water. A challenge of the system with two virulent species of micro-organisms was also made. The methods used to obtain counts and make the challenge are described in this section.

Bacteria counts.- Urine in the cycle and holding tanks was sampled by aseptically pipetting about 40 milliliters into sterile sample bottles. Product water samples were taken at the module outlet through a flame-sterilized fitting directly into sterile bottles. Samples were diluted with sterile distilled water as indicated by previous counts and passed through a .45 micron field monitor membrane. Total count broth (trypticase glucose extract) was introduced and the monitors incubated for 48 hours at 35°C. Colony forming units were counted after incubation and reported as CFU per milliliter.

Microbial challenge.- The system was microbiologically challenged by inoculating the circulating urine and swabbing the evaporating surface of one membrane module with a solution containing about 2×10^6 CFU/per milliliter of a mixture of Alcaligenes Faecalis and Pseudomanos Aeruginosa. Process water samples were collected immediately after the introduction of the microbial solution and at 4, 24 and 48 hour intervals for bacteria counts as described above.

Test Results

The test was run continuously for 90 days according to the plan of test (Appendix A) with minor modifications to operating procedures and parameters at various times during its duration. Eight full and one partial urine fill to solids dump cycles ranging in length from 2 to 19 days were completed during the test duration. The initial cycle was ended prematurely by an erroneous conductivity sensor signal at a urine solids concentration of only 21.2% instead of the 50% design point, resulting in a recovery efficiency for the cycle of only 82.5%. A revised dump procedure was instituted in subsequent cycles, resulting in an average solids concentration of 54.3% at dump and an average recovery efficiency of 95.0% for the remainder of the test. Cycle average water production rates ranged from 0.429 to 0.675

pounds (194 to 307 grams) per hour with an overall average rate of 0.507 pounds (230 grams) per hour with system down times subtracted. A total of 1038 pounds (471 kilograms) of water was produced.

Product water conductivity averaged about 150 micromhos per centimeter with a one time maximum value of 650 micromhos per centimeter. Twenty periodic chemical analyses of 22 properties and constituents showed the product water within specified limits except for 5 turbidity measurements. Two membrane evaporator modules were replaced on day 28 and a third on day 58. The fourth module remaining unchanged for the total test duration. Required maintenance for all causes averaged 6.6 minutes per day for the duration of the test.

Plots of processing rate and product water conductivity are presented in Figure 22 and product water and urine pH in Figure 23, both for the total test duration. Significant events are noted on each chart at the times they occurred. Tabulations of product water chemical analyses and urine and product water bacteriological analyses are presented in Tables 2 and 3. A summary of the results and events of each dump cycle, in chronological order, is presented to provide a more detailed description of the test.

Cycle number 1 - (days 1 - 5).- The initial processing rate, measured eight hours after the installation of the fourth membrane module in the system, was 0.577 pounds (262 grams) per hour. Rate averaged 0.605 pounds (274 grams) per hour and was 0.621 (282) at the last reading before the dump. Product water conductivity increased almost linearly from 55 to 215 micromhos per centimeter during the cycle duration. Chemical analyses number 2 and 4 showed acceptable results except for the high turbidity of sample 2. (Sample number 3 was lost before any tests were conducted). Bacteriological samples, taken daily, showed an increase from 0 to 58 colony forming units per milliliter (CFU/ml) in 5 days in the product water and essentially no bacteria in either the urine cycle tank or holding tank. Urine solids, measured only in the sludge dumped at the end of the cycle, were 21.2%. The dump, triggered by the urine conductivity sensor at a point indicated by earlier laboratory testing equivalent to 50% solids, contained 5.5 pounds of water that could have been reclaimed if 50% solids had been attained. This water loss reduced the recovery efficiency of this cycle to 82.5%. Urine flow was maintained between 100 and 130 pounds (45 and 69 kilograms) per hour by two pumps during the cycle.

Cycle number 2 (days 5 - 21).- Indications of high bacteria counts in the sample taken on day 5 prompted the initiation of the two hour heat sterilization cycle during day 6. The sterilization cycle had the effect of stopping water production for about two and one half hours, thus reducing the average processing rate for the period. Rates ranged from 0.660 pounds (300 grams) per hour at the beginning of the cycle and before the first sterilization cycle to 0.205 pounds (93 grams) per hour near the end of the cycle. Average rate for the cycle was 0.372 pounds (169 grams) per hour on a total elapsed time basis or 0.435 pounds per hour if non-productive periods are subtracted from the elapsed time. Included in this non-productive time are 15 sterilization cycles and one 17.7 hour period when urine flow was

Hamilton Standard DIVISION OF UNITED AIRCRAFT CORPORATION

SVHSER 5903
CR-111932

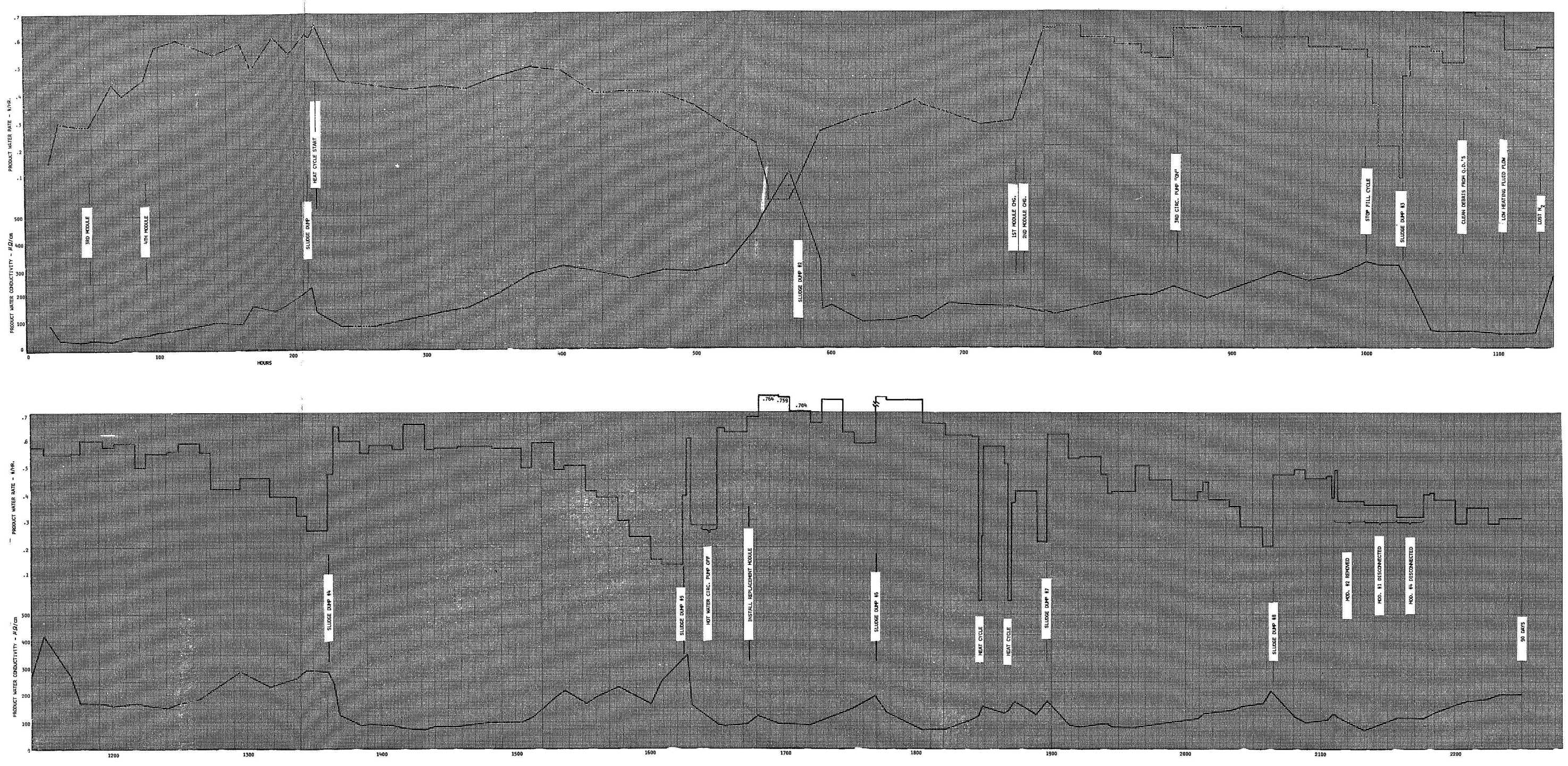

FIGURE 22

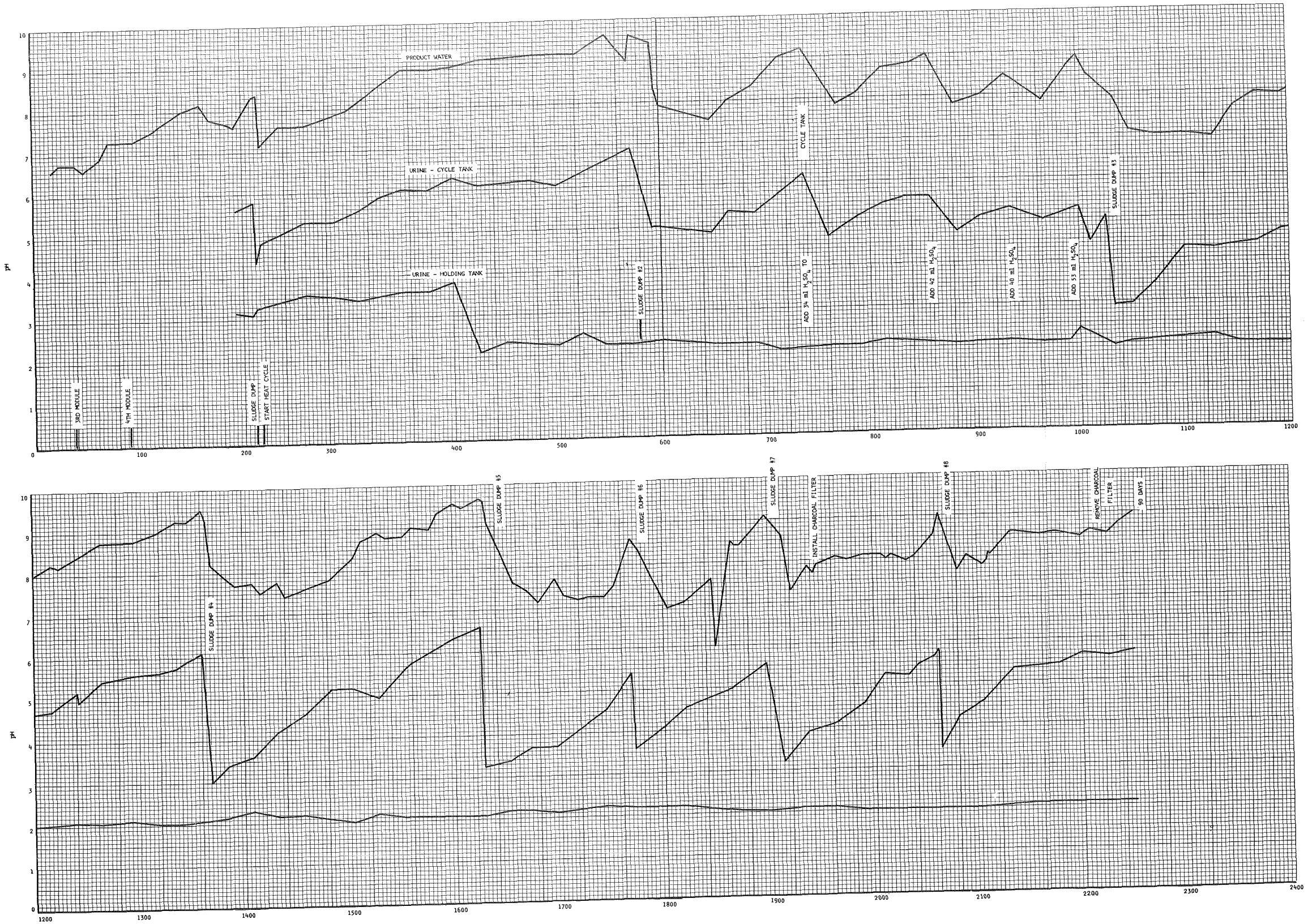
PRODUCT WATER
URINE - CYCLE TANK
URINE - HOLDING TANK
pH
3RD MODULE
4TH MODULE
SLUDGE DUMP
START HEAT CYCLE
SLUDGE DUMP #2
ADD 31 ml H_2SO_4 TO CYCLE TANK
ADD 42 ml H_2SO_4
ADD 40 ml H_2SO_4
ADD 53 ml H_2SO_4
SLUDGE DUMP #3
SLUDGE DUMP #4
SLUDGE DUMP #5
SLUDGE DUMP #6
SLUDGE DUMP #7
INSTALL CHARCOAL FILTER
SLUDGE DUMP #8
REMOVE CHARCOAL FILTER
90 DAYS

FIGURE 23

PRODUCT WATER ANALYSIS PRIOR TO CHARCOAL FILTRATION

VDR II - 90 DAY TEST

SAMPLE NUMBER		1	2	3	4	5	6	7	8	9	10	11	12	13	14	15	16	17	18	19	20	21
SAMPLE DATE		11/18	11/20	11/24	11/25	11/27	11/30	12/2	12/4	12/8	12/10	12/15	12/17	12/21	12/28	1/4	1/11	1/18	1/25	2/1	2/8	2/15
TEST DAY			1	5	6	8	11	13	15	19	21	26	28	32	39	46	53	60	67	74	81	88
	LIMIT																					
Color	15.0 CP	5.0	10		5.0	5.0	5.0	5.0	5.0	7	7	6	5	< 5	7	6	5	< 5	< 5	< 5	5	< 5
Turbidity	10.0 Jack.	12	32		8	30	26	< 4	4	4	16	4	-	-	-	-	-	-	0	-	< 4	< 4
pH	N.S.	7.15	7.05		8.70	7.4	8.4	9.1	9.5	9.35	9.3	8.5	9.3	9.15	6.95	7.95	9.25	8.1	7.5	8.4	8.0	8.3
Conductivity	N.S.	45	55		210	89	162	283	310	355	315	169	152	210	37	212	250	100	85	130	118	99
Oxygen Consumed	100 ppm	20.8	10.8		9.6	8.0	7.1	10.4	9.0	56	18.4	7.0	9.4	11.8	16.4	20.8	10.4	11.2	13.0	12.0	31	17
Anionic Detergent	N.S.	.21	.08		.04	.04	.055	.06	.05	-	.02	.05	-	.04	.02	.02	.03	.025	.02	.025	.019	.028
Solids, Volatile	N.S.	10	14		7	10	28	21	17	24	26	27	15	18	15	67	1	6	20	27	6	6
Solids, Fixed	N.S.	13	18		10	18	5	0	8	23	19	9	.12	5	19	82	11	8	35	14	31	13
Solids, Total	1000 ppm	23	27		17	28	33	21	25	47	45	35	27	23	34	149	12	14	55	41	37	19
Nitrogen, Ammonia	N.S.	3.5	4.4		45.0	19.4	27.0	175	158	88.3	88.3	28.8	49.6	59.6	1.4	3.9	74.1	16.3	2.9	20.1	10.8	23
Nitrogen, Albuminoid	N.S.	-	-		-	-	-	-	-	-	-	36	-	-	-	-	-	-	-	-	69	107
Nitrogen, Nitrite	10 ppm	.003			.001	.003	.003	0	0	.005	.005	.003	.005	.003	.005	.002	.003	.001	.003	.003	.003	.003
Nitrogen, Nitrate	10 ppm	6.5	.2		.6	3.8	2.5	0	0	.04	.5	.8	.7	.8	.8	.8	.8	1.5	1.0	1.5	< 0.1	< .1
Nitrogen, Urea	N.S.	7.5	0		0	0	0	0	7.5	23	20	< 5	< 5	20	< 5	< 5	< 5	5	5	5	< 5	< 5
Chloride	450 ppm	< 5	< 5		< 5	< 5	< 5	< 5	6.5	< 5	< 5	< 5	< 5	< 5	< 5	< 5	< 5	7	5	< 5	< 5	7
Chromium, Hexavalent	0.05 ppm	.02	.02		.01	.02	.01	0	.014	< .006	< .006	< .006	< .01	.02	.01	.01	.01	.01	.01	.015	.01	.01
Sulfate	250 ppm	< 1	< 1		< 1	< 1	< 1	< 1	< 1	3	< 1	< 1	< 1	< 1	< 1	< 1	< 1	< 1	< 1	1.5	1.0	1
Iron	N.S.	.03	.08		.06	.06	.025	.06	.06	.03	< .02	.12	.02	.02	.10	.03	.02	.06	.06	.06	.03	.03
Copper	3.0 ppm	1.37	.91		.36	1.16	.55	.48	.21	.21	.63	1.04	.17	.34	1.42	.39	.55	.69	2.05	.66	1.84	1.3
Manganese	N.S.	< .05	< .05		< .05	< .05	< .05	< .05	< .05	< .05	.07	< .05	< .05	.07	< .05	.06	< .05	< .05	0.06	< .05	.10	.05
Phosphate	N.S.	9.1	12.2		12.0	6.1	6.0	9.1	6.1	12.2	3.0	6.1	3.1	< 1.5	< 1.5	4.5	< 1.5	6.25	6.25	< 1.5	< 1.5	< 1.5
Fluoride	2.0 ppm	< 1	< 1		< 1	< 1	< 1	< 1	< 1	< 1	< 1	< 1	< 1	< 1	< 1	< 1	< 1	< 1	< 1	< 1	< 1	< 1

TABLE 2

TABLE 3

90 DAY TEST BACTERIA ANALYSES

Date of Test	Day No.	Urine In Holding Tank CFU/ml	Urine In Circulating Tank CFU/ml	Process Water CFU/ml
1970				
11/16		NT	NT	NT
11/17		1	0	0
11/18		0	0	1
11/19		0	0	2
11/20	1	0	1	0
11/21	2	2	0	1
11/22	3	0	4	1
11/23	4	0	0	6
11/24	5	0	0	58
11/25	6	0	0	48
11/27	8	NT	NT	285
11/30	11	0	32	1100
12/1	12	0	306	666
12/2	13	0	112	1300
12/3	14	0	70	90
12/4	15	0	90	40
12/7	18	0	5	0
12/8	19	1	1	0
12/9	20	0	0	0
12/10	21	0	0	0
12/11	22	0	0	0
12/15	26	0	0	0
12/16	27	0	0	0
12/18	28	0	0	1
12/21	32	0	0	1
12/22	33	3	1	0
12/24	34	NT	NT	0
12/26	36	NT	NT	0
12/28	38	NT	NT	0
12/30	40	NT	NT	0
12/31	41	NT	NT	0.1
1971				
1/1	42	NT	NT	0
1/3	44	NT	NT	0
1/4	45	NT	NT	0
1/5	46	0.2	0	0
1/6	47	0	0	0
1/7	48	0	0	2
1/8	49	NT	NT	0
1/11	52	0	0	0.6
1/13	54	0	0	0
1/14	55	0	0	0.5
1/15	56	0	0	0.6
1/18	59	0	0	NT
1/19	60	0	0	NT
1/20	61	0	0	12
1/21	62	0	0	5
1/22	63	NT	NT	2
1/25	66	0	0	0
1/26	67	NT	NT	NT
1/27	68	NT	NT	2
1/28	69	NT	NT	8
1/29	70	0.1	0	0
2/1	73	0	0	0
2/2	74	0.1	0	0
2/3	75	0.3	0	0.1
2/4	76	0.1	0	0
2/5	77	0	0	1
2/8	80	0	1	1
2/9	81	0.1	0	0
2/10	82	NT	NT	0
2/11	83	NT	NT	NT
2/12	84	0	0	0
2/13	85	NT	0	0
2/14	86	NT	10	0
2/15	87	0	0	0
2/16	88	NT	NT	0
2/17	89	2.5	0	0

NT = Not Tested

lost. Product water conductivity increased gradually from a low of 87 micromhos per centimeter on day 7 to 315 micromhos per centimeter on day 18, then climbed sharply to peak at 650 micromhos per centimeter shortly before the end of the cycle. Chemical analyses of samples number 5 through 10, taken during the cycle, were within specified limits. Bacteria levels in the product water reached a maximum of 1300 CFU/ml on day 13, but were reduced rapidly after, becoming zero by day 18. Bacteria were observed in the urine cycle tank sample on day 11, peaked at 306 CFU/ml on day 12, and were reduced to zero by day 20. No bacteria were observed in the urine holding tank. Urine solids, determined from specific gravity readings of the cycle tank urine starting on day 14, increased from 19.8% at that point to 46.4% at the dump on day 21. The solids dump was triggered manually when the specific gravity reading of the urine in the cycle tank indicated a solids content in excess of 45%. The automatic dump control, triggered by the urine conductivity meter, which dumped at only 21% solids in cycle number 1, was disconnected. Urine pH measurements, begun on day 5, indicated a gradual rise in the cycle tank urine from 4.7 at the start of the cycle to 6.9 just before dump, indicating a chemical breakdown of the circulating urine with the probable evolution of some ammoniacal compounds. Urine in the holding tank increased in pH from 3.1 at the start of the cycle (day 6) to 3.8 on day 14, when an addition of 1.5 milliliters of sulfuric acid to each liter of urine reduced the pH to 1.98.

Recovery efficiency for this cycle was 95.2%. Urine flow was maintained between 90 and 130 pounds (43 and 59 kilograms) per hour by two pumps until late on day 20, when flow was lost overnight. Flow was restored by adding the third pump and repriming the evaporator modules. Heating and cooling fluid flow control operations were demonstrated during over and under temperature conditions during this cycle. Product water was diverted automatically by the high conductivity reading on day 20.

Cycle number 3 (days 21 - 40).- The sterilization cycle was continued at 2 hours per day through day 24. The initial processing rate for this cycle, immediately after dump and refill was 0.255 pounds (116 grams) per hour. It increased gradually through day 24 to 0.375 pound (170 grams) per hour and then decreased gradually as nitrogen permeation in two modules increased and urine flow decreased, to 0.295 pounds (134 grams) per hour on day 28. Replacement of the two high permeation modules at this point increased the rate to 0.640 pounds (290 grams) per hour. This declined steadily again to 0.528 pounds (240 grams) per hour on day 34, when urine flow was increased by adding the third urine pump. Rate increased to 0.640 pounds (290 grams) per hour and declined slowly to 0.558 pounds (253 grams) per hour until urine feed was stopped on day 39 to concentrate prior to dump on day 40. Rate declined rapidly during the concentration, reaching 0.100 pounds (45 grams) per hour at dump. The average rate for the cycle was 0.474 pounds (214 grams) per hour on elapsed time or 0.486 pounds (220 grams) per hour with down time subtracted. Product water conductivity increased slowly from 100 micromhos per centimeter on day 23 to 370 micromhos per centimeter at dump on day 40. Product water pH, which followed the cycle tank urine pH very closely, ranged between 7.5 and 9.0. Chemical analysis samples number 11 through 14, taken during this cycle, were within specified limits in all categories. The addition of about 1.5 milliliters of sulfuric acid to the cycle tanks for each

liter of urine present, when the cycle tank pH reached 6.0 on day 28, was successful in reducing the cycle tank pH level to 4.5 and the product water pH from 9.2 to 7.8. This sulfuric acid addition was repeated on day 33, 36 and 39 when the cycle tank pH reached 5.5. This additional amount of sulfuric acid was added to each liter of urine collected subsequently along with the chemical pretreatment, maintaining the pH of the urine in the holding tank between 2.0 and 2.4 for the remainder of the test. Bacteria levels remained at essentially zero throughout the cycle. Urine solids increased from 12.0% to 49.2% at dump. To investigate the feasibility of a new dump control concept, the urine feed control was turned off on day 39 when the urine specific gravity indicated a solids content of 38.7% and the urine solids content was allowed to increase and processing rate decline until the dump was activated manually at 46.4%. Urine flow was maintained by 2 pumps until day 34 when the third pump was added to ensure flow maintenance between the once-daily readings taken over the long Christmas holiday weekend. The third pump was turned off early on day 39. Recovery efficiency for this cycle was 93.1%.

Cycle number 4 (days 40 - 54).- The processing rate, at 0.570 pounds (249 grams) per hour at the start of the cycle declined to 0.510 pounds per (232 grams) hour on the next day as permeation in one of the modules replaced on day 28 increased and urine flow decreased. An examination of the high permeation module disclosed a partial blockage of the urine inlet disconnect fitting by precipitated urine solids. Replacement of the inlet disconnects on all four modules increased urine flow from about 75 to 105 pounds (34 to 48 kilograms) per hour, decreased nitrogen permeation by decreasing the pressure drop in the urine lines across the modules and increased the processing rate to 0.70 pounds (318 grams) per hour. The rate was reduced to 0.560 pounds (254 grams) per hour when the failure of the hot water circulating pump on January 1 (day 43) required the installation, on an emergency basis, of a lower capacity pump. Rate continued at about this level through day 50, then declined to 0.457 pounds (207 grams) per hour at the beginning of the pre-dump concentration cycle on day 52. Rate at dump on day 54 was 0.263 (119 grams) pounds per hour. Average rate for the cycle was 0.523 pounds (238 grams) per hour on elapsed time or 0.571 pounds (249 grams) per hour with down time subtracted. Product water conductivity increased from about 50 to 295 micromhos per centimeter with one excursion to about 420 micromhos occasioned by a loss of nitrogen pressure and a resultant temporary bridging across the diffusion gap by product water build up. Chemical analysis samples number 15 and 16 remained within specifications. Bacteria levels remained at essentially zero throughout the cycle. Product water pH increased from a low of 6.9 to 9.5 at dump, tracking the increase in urine cycle tank pH from a low of 2.9 to 6.1 at dump. Urine solids increased from 12% to 29.5% at feed turn off on day 52 to 55.4% at dump on day 54. Urine flow was maintained at more than 100 pounds per hour by two pumps after the replacement of the urine inlet disconnects on day 42. Recovery efficiency for this cycle was 95.5%.

Cycle number 5 (days 54 - 65).- The processing rate remained at a level of about 0.580 pounds (264 grams) per hour through day 61, declined to 0.504 pounds (228 grams) per hour at feed turn off on day 62 and dropped to 0.135 pounds (61 grams) per hour at dump on day 65. Average rate was 0.486 pounds

(221 grams) per hour with no significant downtime. Product water conductivity increased from a low of 70 to 345 micromhos per centimeter at dump. Chemical analysis sample number 17, taken on day 60, was within specifications. Bacteria levels remained at essentially zero in both urine tanks and near zero at the product water sampling ports. Bacteria levels at the product water line connection to the collection vessel were high on day 59 and 60, indicating the probability of growth upstream from the delivery line end. Product water pH increased from a low of 7.4 to 9.6 at dump, tracking the urine cycle tank pH increase from 2.95 to 6.6 at dump. Urine solids increased from 9.8% to 23.8% at feed turn off on day 62 to 57.5% at dump on day 65. Recovery efficiency for this cycle was 95.9%. High nitrogen permeation and low urine flow to one of the original modules, first observed on day 56, led to attempts to improve the flow by cleaning lines and fittings to the module. When these proved unsuccessful, the module was replaced on day 58 with one of two modules prepared on day 29 and held in the membrane soaking tank. The high permeation condition persisted with the new module, which was replaced with the second of the modules from the soaking tank on day 59. Both modules showed acceptable permeation levels in pre-installation tests. Repeated soakings and reinstallations proved ineffective, and the module was removed and a dummy module installed in its place on day 64.

Cycle number 6 (days 65 - 71).- A new membrane module was prepared, soaked, permeation tested and installed in the system in place of the dummy module on day 67. Unsuccessful attempts to establish urine flow to the new module led to the disassembly of the urine feed lines to this module and the disclosure of a precipitated urine solids blockage in the reducing fitting connecting the urine outlet line to the urine header. The blocked fitting is shown in Figure 24. Removal of this blockage resulted in normal urine flow and nitrogen permeation to the new module.

The cycle tank level control was reset at the start of this cycle to reduce the volume of urine by about 50% to provide a shorter cycle and a possible improvement in average processing rate. The initial processing rate, with the dummy module installed, reached 0.625 pounds (284 grams) per hour. Rate after installation of the new module reached 0.764 pounds (347 grams) per hour on day 68 and declined to 0.625 pounds (284 grams) per hour at feed turn off on day 70. Rate at dump on day 71 was 0.585 pounds (265 grams) per hour. Average rate for the cycle was 0.619 pounds (281 grams) per hour for total elapsed time or 0.675 pounds (307 grams) per hour with down time subtracted. Down time was limited to an overnight failure of the hot water pump on day 66. Product water conductivity ranged from a low of 83 to 195 micromhos per centimeter at dump. Chemical analysis sample number 18, taken on day 67, was within specified limits. Product water pH increased from a low of 7.1 to 8.6 at dump, again following the increase in urine cycle tank pH from 3.2 to 5.4 at dump. Urine solids rose from 9.8% to 29.9% at feed turn off to 60.0% at dump. Bacteria levels remained at essentially zero in both urine tanks and reached 8 CFU/ml in the product water on day 69. Recovery efficiency for the cycle was 96.6%.

Cycle number 7 (days 71 - 76).- The processing rate reached a system test high of 0.781 pounds (355 grams) per hour at the onset of this cycle, decreased to 0.512 pounds (232 grams) per hour at feed turn off on day 75

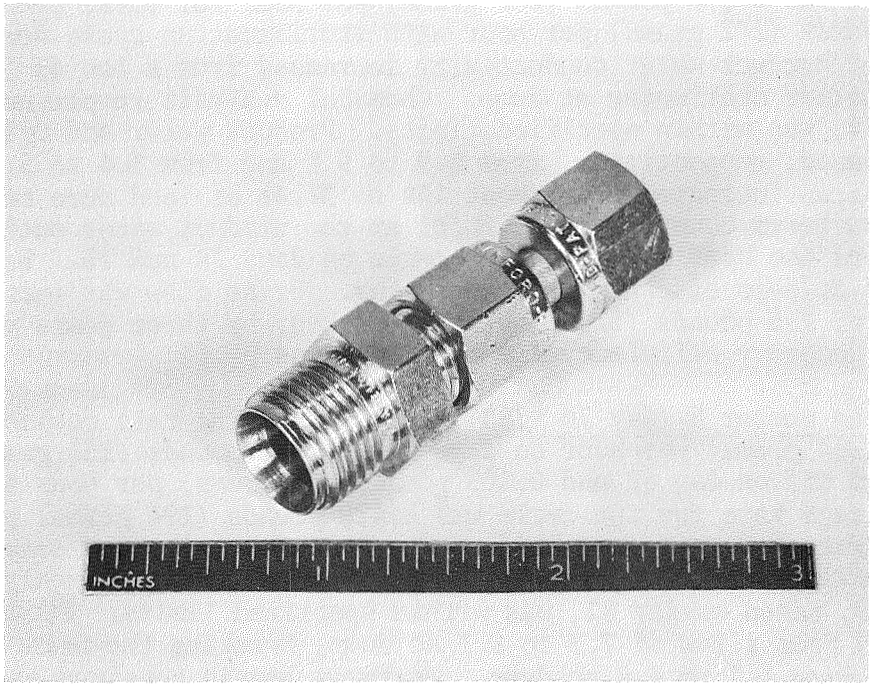

Solids Build Up In Urine Header Fitting

Figure 24

and 0.220 pounds (100 grams) per hour at dump on day 76. Average rate for the cycle was 0.578 pounds (262 grams) per hour for total elapsed time or 0.598 pounds (272 grams) per hour with sterilization cycle down time subtracted. Product water conductivity increased from a low of 70 to 180 micromhos per centimeter at dump. Chemical analysis sample number 19, taken on day 74, was within specified limits. Product water and urine cycle tank pH increased, respectively, from 6.9 to 9.1 and from 3.6 to 5.5 at dump. Urine solids increased from about 10% to 31.4% at feed turn off to 55.9% at dump. Bacteria counts of 500 CFU/ml at the product water outlet line prompted the use of the heat sterilization cycle on days 74 and 75. Bacteria counts remained at zero elsewhere in the system. Urine flow was maintained at a minimum of 115 pounds (52 kilograms) per hour by three pumps throughout the cycle. Recovery efficiency for the cycle was 95.0%.

Cycle number 8 (day 76 - 83).- The processing rate declined from 0.620 pounds (282 grams) per hour on day 76 to 0.302 pounds (137 grams) per hour at feed turn off on day 82 and 0.205 pounds (93 grams) per hour at dump on day 83. Average rate for the cycle was 0.429 pounds (194 grams) per hour with no significant down time. Product water conductivity increased from a low of 80 to 215 micromhos per centimeter at dump. Chemical analysis sample number 20, taken on day 81, was within specified limits. Product water pH increased from a low of 7.3 to 9.1 at dump, tracking the urine cycle tank pH increase from 3.2 to 5.8 at dump. Bacteria levels remained essentially zero throughout the system. Urine flow was maintained at 120 pounds (54 kilograms) per hour or higher throughout the cycle. Urine solids increased from about 10% to 28.4% at feed turn off and 55.9% at dump. Recovery efficiency for the cycle was 95.6%.

A leak around the edge of the membrane on the most recently installed membrane module permitted an excessive amount of nitrogen to enter the urine stream, affecting the flow to two modules on day 77. The product water charcoal canister was installed with a new product water delivery line on day 78. The charcoal canister was heat sterilized and the line flushed with 3% hydrogen peroxide prior to installation. Product water after installation of charcoal was unchanged according to pH and conductivity measurements, but lost essentially all of its characteristic faint ammonia or straw like odor. A blockage of cooling fluid flow to one condenser module was detected and cleaned on day 81. Urine flow to one module was restored from near zero to normal by the removal, cleaning and replacement of its disconnect fittings on day 82.

Cycle number 9 (day 83 - 90).- Processing rate for this cycle, which averaged 0.377 pounds (171 grams) per hour, was perturbed by variations in the arrangement of the evaporator modules in an investigation of their degradation. This investigation, which involved the removal of each module to determine its contribution toward the total processing rate, was conducted for 66 of the 185 hours of the cycle. The test was, however, inconclusive, in that the basic four module rate established before the removal of each module in turn, could not be recovered when all four modules were returned to service. Proportional rates were later determined by replumbing the product water lines to make individual collections from each condenser module with the membrane modules in different arrangements. The results are described in the test discussion below. Product water conductivity for this

cycle increased from a low of 70 to 200 micromhos per centimeter at the conclusion of the test. Product water pH increased from a low of 7.7 to 8.9 at test conclusion, tracking the increase in urine cycle tank pH from a low of 3.4 to 5.7 at test conclusion. Urine solids increased from about 10% to 31.8% at test conclusion. Chemical analysis sample number 21, taken on day 88, was within specified limits. About 2 x 10^6 CFU/ml of Alcaligenes Faecalis and Pseudomonas Aeruginosa bacteria strains were introduced into the cycle tank on day 85 and this same solution was swabbed on the membranes of one evaporator module on day 89. Subsequent bacteriological samples, taken from the urine cycle tank and the product water line after 4, 24 and 48 hours, showed no bacteria present. A measurement of the urine concentrate left in the system was made at the conclusion of the test and calculations were made based on the concentration of this volume to 55% solids to determine the cycle's efficiency. These showed a recovery efficiency of 93.6%.

The results of the bacteria resistance tests are tabulated in Table 3. The results of the bacteria challenge tests are tabulated in Table 4. Fresh pretreated urine showed essentially negative counts during the test program.

TABLE 4

90 DAY TEST RESULTS - BACTERIA CHALLENGE

Circulating Urine Test	
Time of Test (Hrs)	CFU/ml
0	2 x 10^6 inoculant
4	1 in urine; 0 in process water
24	0 in urine; 0 in process water
48	10 in urine; 0 in process water
Membrane Inoculation Test	
Time of Test (Hrs)	CFU/ml
0	1.8 x 10^9 per membrane
4	0 in process water
24	0 in process water
48	0 in process water

Circulating urine showed essentially negative results except during the third week of the program when buffering salts inherent to the system caused pH fluctuation levels which permitted bacterial survival. Readjustment of the pH reversed conditions to inhibiting and/or bactericidal levels giving negative results thereafter. The process water was microbiologically acceptable except during a procedural upset in the second week of the test. The counts were returned to expected levels by the introduction of the heat sterilization cycle.

Process water at the entrance to the collection vessel showed bacterial density fluctuations probably caused by instrumentation and valving contaminations. Charcoal filters placed in stream were rapidly contaminated but sterilization was an effective control, at least temporarily. The filter would become recontaminated so long as the upstream contamination remained viable.

System contamination of circulating urine at 2×10^6 CFU/ml showed no apparent transfer to the process water. The heat and acidic conditions apparently rapidly rendered the bacterial inoculants non-viable. The 10 CFU/ml observed after 48 hours in the circulating urine were not members of the inoculant species as determined by visual and microscopic examination and were probably the result of some external contamination during the sampling procedure. Contamination of membrane surfaces at 1.8×10^9 CFU per membrane of the inoculants showed no apparent transfer of microbes to the process water under the conditions of the test.

The test program conducted over the 90 day period indicates that the vapor diffusion reclamation system can produce a microbiologically potable water meeting Space Science Board recommendations for bacterial counts. The introduction of instrumentation, valves and other necessary materials can be a factor in contamination upsets and all appropriate pre-sterilization and sanitary steps must be extended to control their importance as focal points of bacterial infection.

Discussion

The 90 day endurance test was successful in demonstrating the basic reliability of the system in addition to providing significant data on required operator time, bacteriological considerations and shortcomings of the hardware. All system automatic controls functioned adequately for the duration of the test with the exception of the automatic urine solids dump, designed to be triggered by the Beckman conductivity sensor. The dump procedure used from cycle number two to the conclusion of the test, while requiring about seven minutes of operator time for each dump, proved much more effective from the viewpoint of recovery efficiency and has resulted in the revision of the hardware to again fully automate the procedure.

The required operator time of 592 minutes or 6.57 minutes per day is in a large part attributable to problems with the hardware, particularly the urine quick disconnects and headers. Though only 92 minutes were directly

attributed to the cleaning or replacement of these items, in the test log (Appendix C) many of the problems with urine circulation and nitrogen permeation, which required the largest proportion of operator time, were later found to have been caused by blockages in these items. A tabulation of maintenance operations and times is shown in Table 5. Even the replacements of the first two membrane modules on day 28 probably could have been avoided if their fittings had been maintained free of urine solids. The urine headers have been redesigned and manufactured to eliminate the restrictive reducing sections which encouraged the build up of flow inhibiting solids. The redesign of the urine quick disconnects is, however, beyond the scope of the present effort.

The overall system recovery efficiency, calculated on the basis of solids concentration at each dump was 93.9%. This included the calculation discussed under cycle number 9 involving the concentration of the residual urine to 55% solids. This method indicated that 1038.36 (472.2) out of a possible 1105.78 pounds (502.6 kilograms) of water were recovered. An alternative method, which assumes that the normal urine solids concentration is exactly 4%, shows 1107.42 pounds (503.4 kilograms) of water available, less than 0.15% out of agreement with the value determined from the concentration calculations.

The individual module processing rates, measured after the replumbing of the product water line on day 89 showed wide variations as follows:

Module	Days In Use	Rate Lbs/Hr	(grams/hr)	% Of Total
1	63	.126	(52.2)	41.2
2	23	.050	(22.7)	16.3
3	63	.078	(35.4)	25.5
4	90	.052	(23.6)	17.0

The modules were relocated in different evaporator housings to eliminate the possibility of any condenser module effect in the rates with no significant change in the data. Nitrogen permeation at this time was low, with a relative rate of about 3 to 1 between the highest, module 2, and the lowest, module 4. Modules 1 and 3 were about equal between the extremes of 2 and 4.

The relatively low rate for the 90 day module is about what might be expected due to degradation of the membranes. The low rate for the 29 day module might well be attributed to its relatively high nitrogen permeation. The reason for the large difference between the two 63 day membranes, however, is not evident It is possible that differences in nitrogen permeation or urine flow rates to these modules over their total usage time span, caused by partial blockages in their urine flow paths, could have resulted in large differences in their water throughputs and thus their relative degradations. Additional testing with improved flow paths and individual module processed water collections would provide more significant data to determine degradation rates.

TABLE 5

MAINTENANCE OPERATIONS AND EXECUTION TIMES

Test Day	Operation	Time, Minutes
6	Solids Dump	10
21	Solids Dump	10
40	Solids Dump	10
54	Solids Dump	10
65	Solids Dump	10
71	Solids Dump	10
76	Solids Dump	10
83	Solids Dump	10
	Total - Solids Dump	80
12	Urine Line or Fitting Blockage Clearance	5
13	Urine Line or Fitting Blockage Clearance	5
21	Urine Line or Fitting Blockage Clearance	35
42	Urine Line or Fitting Blockage Clearance	27
55	Urine Line or Fitting Blockage Clearance	20
56	Urine Line or Fitting Blockage Clearance	5
58	Urine Line or Fitting Blockage Clearance	13
59	Urine Line or Fitting Blockage Clearance	25
60	Urine Line or Fitting Blockage Clearance	5
61	Urine Line or Fitting Blockage Clearance	3
62	Urine Line or Fitting Blockage Clearance	5
64	Urine Line or Fitting Blockage Clearance	75
67	Urine Line or Fitting Blockage Clearance	45
73	Urine Line or Fitting Blockage Clearance	20
77	Urine Line or Fitting Blockage Clearance	100
79	Urine Line or Fitting Blockage Clearance	3
82	Urine Line or Fitting Blockage Clearance	20
85	Urine Line or Fitting Blockage Clearance	10
	Total - Blockages	421
28	Module Replacement	4
58	Module Replacement	2
	Total - Module Replacement	6
11	Manual Heat Cycle Activation	2
12	Manual Heat Cycle Activation	2
	Total - Heat Cycle	4
14	Manual Holding Tank Acid Addition	3
22	Manual Holding Tank Acid Addition	3
28	Manual Holding Tank Acid Addition	2
33	Manual Holding Tank Acid Addition	2
36	Manual Holding Tank Acid Addition	2
39	Manual Holding Tank Acid Addition	2
	Total - Acid Addition	14
-	Miscellaneous Hardware Maintenance	67
	Total - All Operations	592

The membrane modules were removed from the system at the conclusion of the test and examined for physical deterioration. No obvious structural or physical differences were observed, except for variations in urine solids build up on the membrane surfaces. These varied in degree about in proportion to the time in service of each module, but were not pronounced enough to shed any additional light on degradation rates. The modules are shown in Figure 25. An enlarged view of the 90 day module shown in Figure 26 illustrates the character of the solids build up. The solids become an almost integral part of the membrane and cannot be wiped or scraped from the surface. The build up of urine solids in one of the urine feed lines between the urine inlet header and a module is illustrated in Figure 27. This build up could not be removed from the tube wall with a water flush, but was dislodged by a wet cotton swab. The build up is quite thin and probably caused no flow restriction in the tube.

In order to further analyze the behavior of the membranes, an understanding of the basic mass transfer relationships for the membrane vapor diffusion process is required. The relationships are:

$$R_m = K_m A (p_1 - p_2) \tag{1}$$

for the transfer of water vapor through the membrane, where

R_m = water vapor flow rate, lb/hr (gm/hr)
K_m = membrane permeability constant, lb/hr-ft^2-psi (gm/hr-m^2-gm/cm^2)
A = effective membrane area, ft^2 (m^2)
p_1 = water vapor partial pressure in urine, psi (gm/cm^2)
p_2 = water vapor partial pressure at membrane surface, psi (gm/cm^2)

$$R_g = \frac{DAP_t (p_2 - p_3) M}{R_o T P_{gm} Z} \tag{2}$$

for the transfer of water vapor across the diffusion gap, where

R_g = water vapor flow rate, lb/hr. (gm/hr)
D = diffusivity of water vapor in gas, ft^2/hr. (m^2/hr)
A = effective diffusional area, ft^2 (m^2)
P_t = total pressure in diffusion gap, lb/ft^2 (gm/m^2)
p_2 = water vapor partial pressure at membrane surface, psi (gm/cm^2)
p_3 = water vapor partial pressure at condenser surface, psi (gm/cm^2)
M = molecular weight of water, lb/mole (gm/mole)
R_o = universal gas constant, 1543 lb.-ft/mole-°R (213.7 Kg-m/mole-°R)
T = average gap temperature, °R
P_{gm} = log mean partial pressure of the gas, lb/ft^2 (gm/cm^2)
Z = gap width, ft. (cm)

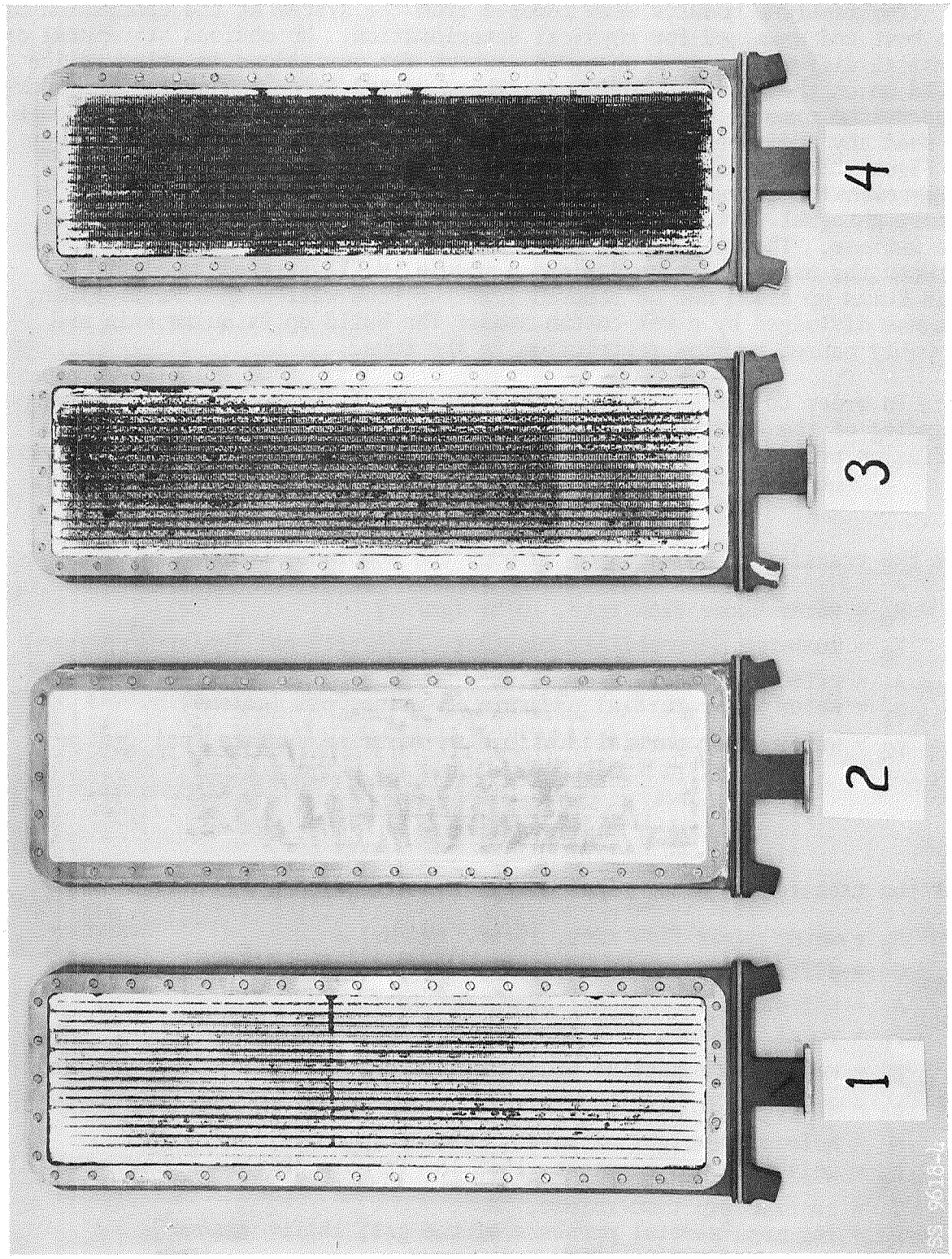

90 Day Test Membrane Modules

Figure 25

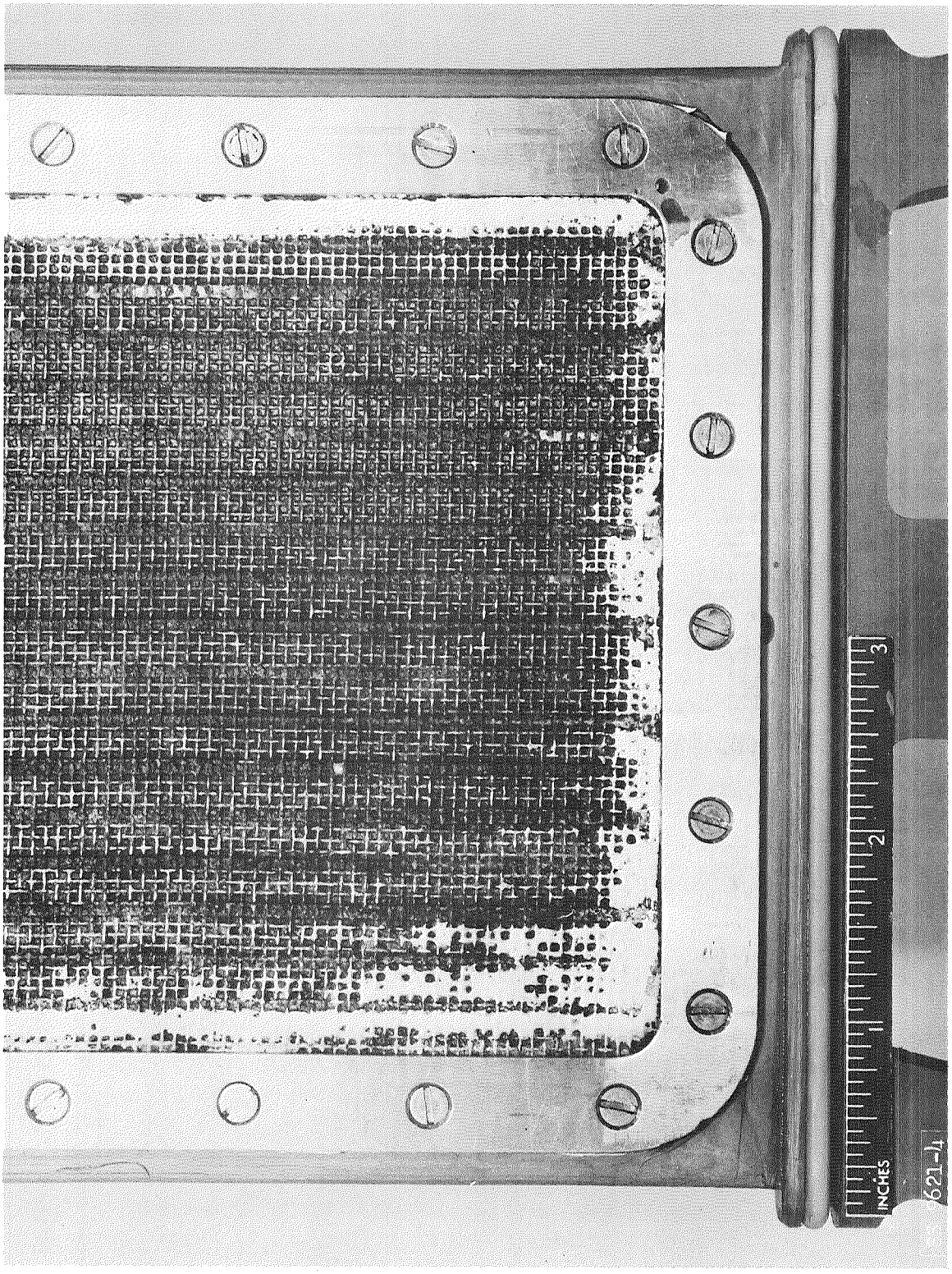

90 Day Test Membrane Solids Build-Up

Figure 26

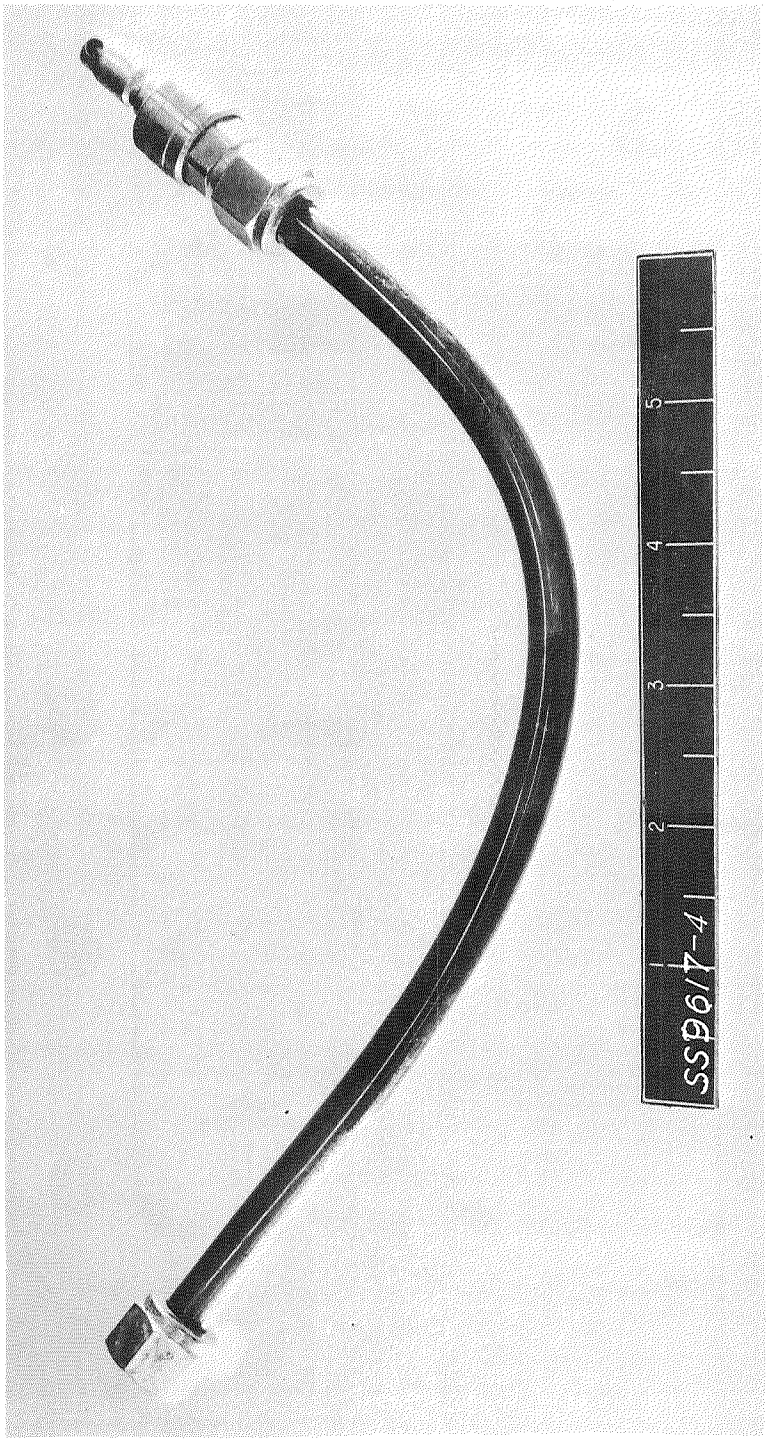

90 Day Test Urine Feed Tube

Figure 27

equation (2) may be put in the form

$$R_g = K_g A (p_2 - p_3) \tag{3}$$

by letting $K_g = \frac{D P_t M}{R_o T P_{gm} Z}$ = gap permeability constant .

Since $R_m = R_g$ and the membrane and diffusion gap resistances to flow are in series, equations (1) and (3) may be combined to eliminate p_2, yielding

$$R = K_T A (p_1 - p_3) \tag{4}$$

for the transfer of water vapor from the urine to the condenser, where

$$\frac{1}{K_T} = \frac{1}{K_m} + \frac{1}{K_g} \quad .$$

For this system, K_g may be determined for the average operating conditions encountered by assuming the following values for the operating parameters of equation (2):

P_t = 15.5 psi (1.09 K_g/cm^2)
T = 560°R
P_{gm} = 15.0 psi (1.05 K_g/cm^2)

these, in combination with the physical constants

D = .99 ft^2/hr. (.092 m^2/hr)
M = 18 lb/mole (8.2 K_g/mole)
R_o = 1543 lb.-ft/mole-°R (213.7 K_g-m/mole-°R)

and the gap width, Z = .0183 ft. (0.557 cm) yield a value for

K_g = 0.168 lb./hr.-ft^2-psi (11.7 gm/hr-m^2- gm/cm^2)

The reduction of the test data for any given period to provide a value for the membrane permeability constant, K_M, shoul yield a K_M varying only with total water processed through the membrane as a measure of the membrane's performance degradation. In data reduction, K_M is determined by first determining K_T from

$$K_T = R/A \Delta p$$

where R is measured directly, A is 4 square feet of effective membrane area, and Δp, the total water vapor pressure differential, is determined by averaging urine and condensing temperatures and extrapolating the corresponding vapor pressures from tables in references 1 and 2 for urine and water, respectively. The effects of urine solids concentration and temperature variations are negated by this normalization of the process driving potential pressure.

K_M is then determined using K_T and the constant K_g in equation (4), rewritten as

$$K_M = \frac{K_g \; K_T}{K_g \; K_T} \quad .$$

A summary of the pertinent data and the constants generated for a few selected high processing rate periods is presented in Table 6. Days 33, 34 and 35 were selected because of their high processing rate and the change in urine flow rate. Days 43 and 44 were chosen for comparison with days 33 - 35 because of their identical membrane arrangement, while day 72 was included to show the effect of replacing one membrane module on day 67. The data for days 33 to 35 seem to indicate an almost linear relationship between urine flow rate and processing rate. Urine flow was actually increased about 1/3 of the way into day 34 by the addition of the third urine pump. Urine flow for the period was computed by reducing a weighted average of the flows before and after the addition of the pump. The relationship observed at this time, however, was refuted by the data for days 43 and 72 when lower urine flows resulted in higher processing rates. The only factor not accounted for in these calculations is the permeation of nitrogen through the membrane and its resultant interruption of processing. This factor, and the imbalance in the urine flow to each module caused by partial blockages in the urine quick connects and headers make the calculation of a true and meaningful membrane permeability constant almost impossible.

Additional testing, with individually measured urine and product water flows, would provide the data necessary to establish permeability constants and a better understanding of membrane life and degradation. These, in turn, would provide the information necessary to optimize both the operation of this system and the design of a flight system.

This analysis of the 90 day test results indicates that the VDR process will provide a viable system for spacecraft water reclamation.

TABLE 6

90 DAY TEST - TYPICAL PROCESS CONSTANTS

Test Day	Process Rate (lb/hr)	Urine Solids (%)	Urine Temp. (°F)	Condenser Temp. (°F)	Urine Vapor Pressure (psi)	Condenser Vapor Pressure (psi)	Total Pressure Differential (psi)	Urine Flow Rate (lb/hr)	K_T (lb/hr. ft^2 psi)	K_M (lb/hr. ft^2 psi)
33	.524	32.3	140	47	2.5280	0.1591	2.3689	141.2	.0553	.082
34	.619	32.1	140	46	2.5317	0.1532	2.3785	166.9	.0651	.106
35	.640	32.7	141	46	2.5844	0.1532	2.4322	177.0	.0657	.109
43	.665	15.4	136	48	2.4810	0.1652	2.3158	99.9	.0718	.125
44	.563	18.1	134	48	2.3400	0.1652	2.1748	113.0	.0647	.106
72	.761	17.9	142	47	2.8704	0.1591	2.7113	123.4	.0702	.120

FLIGHT SYSTEM ESTIMATE

A recent study by Hamilton Standard engineers and designers indicates that a vapor diffusion system designed and fabricated as flight hardware to accomodate the urine output of six men would require a launch weight of 209 pounds (95.0 kilograms) and a volume of about 13.8 cubic feet (0.390 cubic meters). Such a system would include all the components of the flight concept prototype system with installed expendables for 180 days of operation. It would require 71 watts of connected electrical power and 830 watts of thermal power to reclaim a minimum of 95% of the water available in the six man urine supply and two pounds per man day of flush water.

APPENDIX A

Test Plan

Hamilton Standard DIVISION OF UNITED AIRCRAFT CORPORATION

SVHSER 5903
CR-111932

FLIGHT CONCEPT PROTOTYPE VAPOR DIFFUSION

WATER RECLAMATION SYSTEM

TEST PLAN

Contract NAS 1-8943

August 31, 1970

REVISION A - November 9, 1970

Prepared by: H. Kolnsberg

H. Kolnsberg
Project Engineer

L. F. Desjardins
Project Manager

F. H. Greenwood
Program Manager

1.0 TEST OBJECTIVES

The purpose of this test program is to evaluate the VDR system and demonstrate the feasibility, operating characteristics, and maintenance procedures of the flight concept prototype vapor diffusion water reclamation (VDR) system during a continuous operating period of 90 days in a mode simulating the requirements of flight conditions. Particular attention will be paid to processing rates and efficiencies and their degradations, power requirements, the nature and extent of manual operations required, the amount of maintenance required, the quantities of expendable materials consumed, water purity and microbe control.

2.0 SYSTEM DESCRIPTION

In operation, the VDR system circulated continuously heated pretreated urine in a circuit from the cycle tank through a solids sensor and a battery of membrane modules. Water is evaporated from the urine through the membranes, diffused across a pressurized nitrogen gap, condensed on a cooled porous nickel plate and driven through the plate, a conductivity sensor and a charcoal canister to a collection tank by the nitrogen pressure. Urine and condensing temperatures are controlled by flow-diverting solenoid valves in the heating and cooling circuits activated by thermistors in the urine and cooling circuits. Urine solids content is monitored by a conductivity sensor in the urine circuit which activates a level sensing device and a motor operated diverting ball valve to dump the urine sludge when sufficient water has been removed. Product water of unacceptable quality is diverted for reprocessing before introduction to the charcoal canister by a solenoid valve activated by a conductivity sensor in the product water line. Visual and/or audible signals are activated simultaneously with all automatic functions.

The membrane battery consists of four separate and independent modules, each containing about 1 square foot of useful membrane area and initially capable of producing about 0.4 pounds of water per hour. Any combination of modules may be utilized by removing the urine feed line quick-connect from the unwanted modules.

Since preliminary testing of the system has indicated that operation with a pressurized urine loop results in the permeation of urine solids through the membrane after about 100 hours of operation, the system components are rearranged to permit operation with the cycle tank at atmospheric pressure and permeation of nitrogen from the diffusion gas into the flowing urine stream. This procedure is identical to that used during membrane evaluation tests. The nitrogen will be removed from the urine by exposure to ambient in the cycle tank which contains a level sensing device to control the flow of urine into the system from a gravity feed tank. The urine solids sensor is relocated from its position downstream of the pump to a position downstream of

2.0 SYSTEM DESCRIPTION (Continued)

the evaporator modules eliminating the interference of nitrogen bubbles and maintaining the automatic sludge dumping features of the system.

3.0 TEST RIG DESCRIPTION

The 90 day test set up is shown schematically in Figure A1. It consists of the VDR system plus power supply, heating and cooling water circulation loops, a regulated supply of nitrogen, temperature and pressure probes as indicated and collection vessels. The temperature and pressure probes will be connected to recording instruments to provide a continuous strip-chart record of the pertinent system operating parameters for the duration of the test. Power input to the system will be measured by a wattmeter. Conductivity measurements of the circulating urine and the product water will be continuously recorded through take-offs from the system's indicating meter. Daily records will be maintained of the various fluid and solids collection volumes and of the system liquid flow rates by way of manual readings. Flow meters will be equipped with throttling valves to control liquid flow rates.

Test instrumentation will consist of:

Instrument	Function	Accuracy
Thermocouples, copper-constantan	Indicate system temperatures	± 2°F (1.1°C)
Pressure transducers	Indicate urine and nitrogen pressures	± 0.5 psi (35 gm/cm^2)
Variable area flow meters	Indicate liquid flows	± 2% full scale
Beckman RA-5 Solu Meters	Indicate urine and process water conductivity	± 2% full scale
Honeywell Electronic 19 Strip-chart recorders	Record urine and nitrogen pressures	± 0.25 psi (18 gm/cm^2)
Honeywell Electronic 16 Multipoint Strip-chart recorder	Record system temperatures	± 1°F (0.6°C)

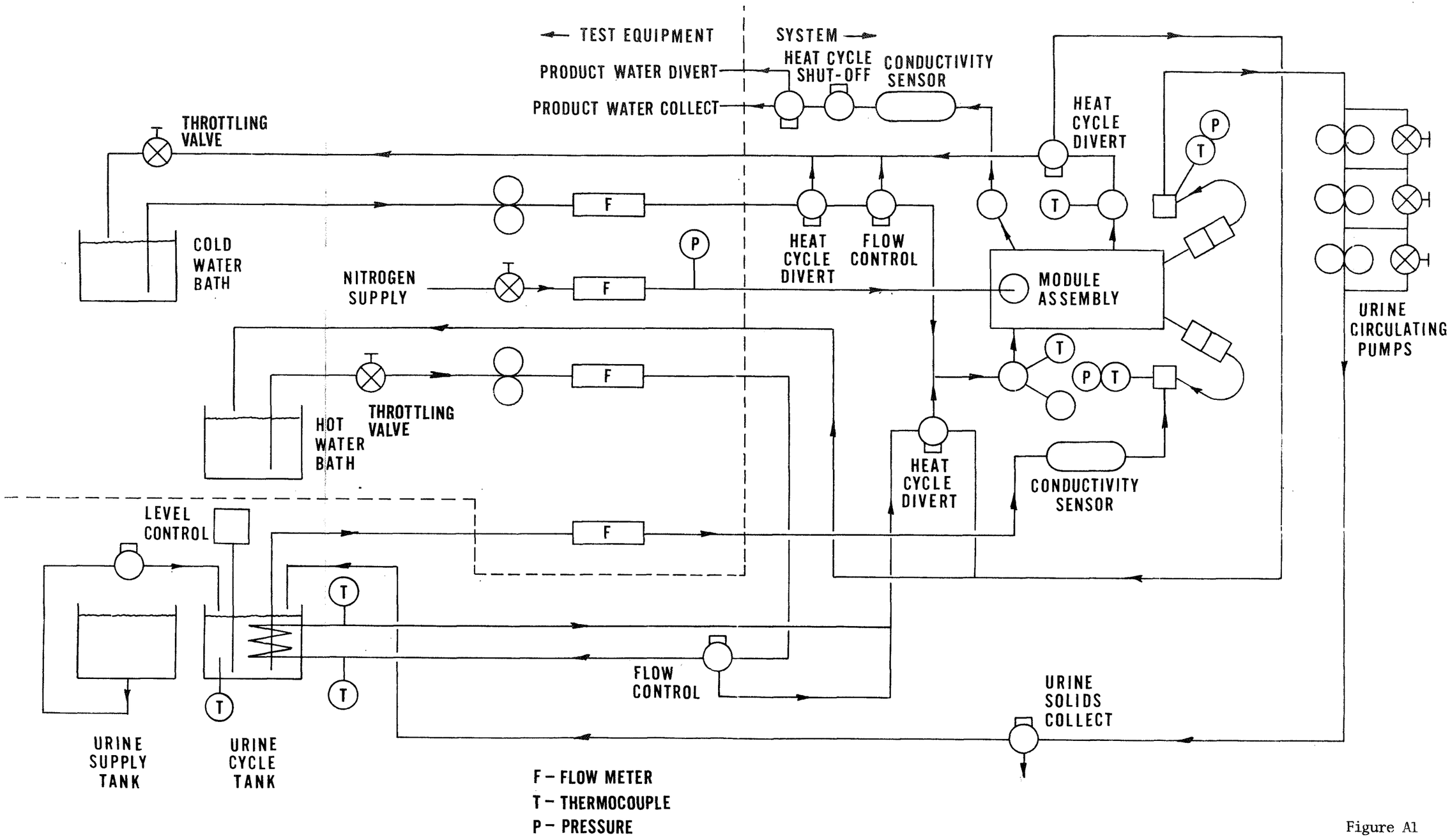
TEST EQUIPMENT
SYSTEM
PRODUCT WATER DIVERT
PRODUCT WATER COLLECT
HEAT CYCLE SHUT-OFF
CONDUCTIVITY SENSOR
THROTTLING VALVE
HEAT CYCLE DIVERT
COLD WATER BATH
NITROGEN SUPPLY
HEAT CYCLE DIVERT
FLOW CONTROL
MODULE ASSEMBLY
URINE CIRCULATING PUMPS
HOT WATER BATH
THROTTLING VALVE
HEAT CYCLE DIVERT
CONDUCTIVITY SENSOR
LEVEL CONTROL
FLOW CONTROL
URINE SOLIDS COLLECT
URINE SUPPLY TANK
URINE CYCLE TANK
F – FLOW METER
T – THERMOCOUPLE
P – PRESSURE

Figure A1

4.0 TESTING

4.1 System Evaluation

This phase of the test program is designed to determine the extent to which the system measures up to design requirements and to establish its optimum operating modes. This evaluation consists of the following tests:

4.1.1 Gap Pressure Determination

A condenser assembly consisting of a porous plate and heat exchanger will be charged with distilled water and pressurized to 0.5, 1.0 and 1.5 psig. Water flow rate will be measured and a pressure level will be selected which provides for a flow at least three times the design flow rate of 13.2 pounds per day. In the event that this flow rate cannot be obtained with a gap pressure of up to 1.5 psig or the gap pressure results in excessive gas permeation through the membrane a higher suction pressure will be applied to the process water outlet. Excessive gas permeation will be determined by visual observation of modules urine outlet flow.

4.1.2 Pre-treat Capability

Distilled water will be charged with twice the quantity of pre-treat normally used for urine and samples of the membrane and backup screen will be immersed in this solution for 7 days and examined for evidence of degradation. Should degradation occur pre-treat chemicals will not be used in subsequent tests.

4.1.3 Process Water Optimization

The purpose of this test is to determine the maximum processing capability of the VDR II system. New membranes will be installed in the 4 evaporators and the system will be flushed and charged with distilled water without pre-treat. The system will be operated with urine inlet temperature at 145 $\pm$ 5°F and a condenser inlet temperature of 45 $\pm$ 5°F. Hot water temperature will be adjusted to a maximum of 160°F to obtain the required urine temperature. Urine flow will be adjusted from 200 ml/min. upward to plot process flow vs. urine flow rate to determine max. flow capability. More test points will be taken in the region where the curve changes slope to more precisely identify the point of diminishing returns. It is estimated that nine test points will be adequate to define the curve. Measurements described in paragraph 3.0 will be used to determine heating and cooling loads from urine, heating fluid and cooling fluid flows and temperature differentials.

4.1.3 Process Water Optimization (Continued)

Approximately 5 days prior to completion of the process water flow optimization test, samples of supply water and process water ahead and after the charcoal filter shall be subjected to the microbiological tests of Table 1. In addition, process water shall be examined for other properties of Table 1.

4.1.4 Bacteria Resistance

Samples of supply water and process water ahead and after the filter, will be taken and subjected to microbiological examination. Pretreat chemicals will next be added to the water in the supply and cycle tanks if this has not been shown harmful previously. At least two species of bacteria (Flavo-bacterium and pseudomonas) shall be added to the pretreated water in the cycle tank. Microbiological tests will be conducted on samples of supply water and process water ahead of and after the filter 4, 24 and 48 hours after introduction of the bacteria. The system will next be challenged by smearing the bacteria described above on a membrane surface. Microbiological tests will be conducted on samples of supply water and process water ahead and downstream of the filter, at 4, 24 and 48 hours after smearing the membrane.

4.1.5 Urine Reclamation

The pretreated water will be drained from the supply and cycle tanks and replaced with fresh urine in the cycle tank only. The system will be operated at the optimum conditions defined and determined in 4.1.3 above for 72 hours. All parameters defined in paragraph 3.0 will be measured to determine system performance. The cycle tank shall be refilled manually in order to terminate the test at a nearly empty tank thus exposing the system to the highest possible solids content. Microbiological tests of supply urine and process water before and after filter will be conducted at the end of the test. In addition, the process water shall be tested for all the conditions of Table 1 at the end of the 72 hour test. Success of this test will be demonstrated by meeting a rate of 13.2#/day, with a 95% recovery and satisfaction of the quality standards of Table 1.

4.2 Reliability and Time Study Tests

This test phase is to demonstrate the system's long term capability.

The system will be set up for automatic addition of pretreated urine from the supply to the cycle tank. The system will be assembled without the charcoal filter and with provision for periodic heating of the condenser assembly. Prior to operation the process water circuit and the gas gap will be flushed with a 3% hydrogen peroxide solution for 16-24 hours. System operation

4.2 Reliability and Time Study Tests (Continued)

will be started after installation of fresh pre-wetted evaporator modules. The following conditions will be imposed on the system:

- Urine flow rate 100 ± 20 lbs./hr.
- Urine inlet temp. 145 ∓ 5°F
- Hot water inlet temp. 160°F max.
- Cooling water inlet temperature will be adjusted downward to 40°F minimum from a sump exposed to room temperature to obtain a nominal process rate of 0.7 lbs./hr.

Testing will be started with the residual hydrogen peroxide in the process water circuit and samples of process water will be taken and tested at approximately 24 hour increments. When the process water tests (available 24 hours after sampling) display a bacteria count of 6 or more viable micro-organisms per milliliter, hot water outlet flow will be diverted to replace the normal cooling water flow for two hours daily. Bacteria test samples will be taken daily to observe the increase or decrease in bacteria count. If the bacteria count shows an increase after "heat treatment" the heat input interval will be increased to 4 hours. If the bacteria count decreases to less than 10 and remains below this level for 5 days the heat interval will be reduced to one hour. Any trend showing increasing bacteria will be cause to return to the longer interval (two hours). Urine used during this test will be limited to selected donors who have been examined and found free of infection. In the event of illness donors will be disqualified until well.

Manual operation of the system will consist of addition of pretreated urine to the supply tank, adjustment to the input conditions defined above, and the replacement of membrane modules if the processing rate falls below 0.1 pounds per hour per square foot (0.43 lbs./hr.) for 24 hours or if water conductivity remains above 500 micromhos per centimeter for 24 hours. At this time a sample will be taken for chemical and biological tests. Since only two spare evaporators are available operation with only two evaporators (other positions will be closed) will be necessary for 24-48 hours while rebuilding and pre-wetting two other modules. If not previously demonstrated during the test, a demonstration of the system's automatic controls will be initiated by deliberate introduction of water at approximately 170°F to the heating loop, 35°F water to the cooling loop, and 500 micromhos per centimeter water to the product line will be accomplished during the last 30 days of the test. During the final 10-15 days of test a sterile charcoal filter will be installed and bacteria samples taken upstream and downstream of the filter on a daily basis. The filter will be replaced with another sterile filter as required. During the final 7 days of test the bacteria resistance test of Para. 4.1.4 will be conducted except that urine will be used in place of pretreated distilled

4.2 Reliability and Time Study Tests (Continued)

water and Alcaligenes Faecolis will be substituted for Flavobacterium. Total test time will be 90 days. During the test, readings defined in section 3.0 shall be taken. Power and flow rates will be recorded daily on Monday through Friday. Urine addition and process water addition and collection will be recorded when accomplished. Replacement of membranes and any other maintenance will be recorded. In addition, samples of urine in the supply and cycle tanks and process water will be taken daily from Monday to Friday and subjected to microbiological examination. pH of the supply and cycle tank urine will be measured daily on Monday to Friday. During the first two weeks of testing samples will be taken on Monday, Wednesday and Friday and examined for the properties of Table A1. In the two succeeding weeks samples will be taken on Tuesdays and Fridays. Thereafter, once each week a sample of process water will be tested for the remaining properties described in Table A1. Specific gravity of the circulating urine will be recorded daily and at each solids dump.

5.0 TEST RESULTS

A log of all routine and extraordinary operations performed on the system during the test will be maintained. Total times spent in system maintenance will be logged.

The strip-chart record of the system's pertinent operating parameters will be reduced to a tabular or graphic format and combined with the manually noted data on flow rates and membrane degradation and solids content.

Individual reports on the results of each physical, chemical and microbiological analysis of the product water will be prepared and summarized.

TABLE A1

Product Water Analyses

Item	Limit *
Color	15.0 CP units
Turbidity	10.0 Jackson units
pH	N.S.
Conductivity	N.S.
Oxygen consumed	100 ppm
Anionic detergent	N.S.
Solids, volatile	N.S.
Solids, fixed	N.S.
Solids, total	1000 ppm
Nitrate and Nitrite (as nitrogen)	10 ppm
Nitrogen, ammonia	N.S.
Nitrogen, albuminoid	N.S.
Nitrogen, urea	N.S.
Chloride	450 ppm
Chromium, hexavalent	0.05 ppm
Sulfate	250 ppm
Iron	N.S.
Copper	3.0 ppm
Manganese	N.S.
Phosphate	N.S.
Fluoride	2.0 ppm
Total bacteria	10 ml **

TABLE 1A (Continued)

* Allowable upper limits established by the Space Science Board of the National Academy of Sciences, 1967. N.S. indicates no limits specified. Tests for arsenic, barium, baron, cadmium, lead, selenium and silver recommended by the Space Science Board will be eliminated due to the extremely low levels of these elements present in urine.

** Contractual limit

APPENDIX B

90 Day Test Data Sheets

HSF-175.1A 1/6

Hamilton Standard DIVISION OF UNITED AIRCRAFT CORPORATION
WINDSOR LOCKS, CONNECTICUT 06096

SPACE & LIFE SYSTEMS LABORATORY
LOG OF TEST

TYPE OF TEST: 90 DAY ENDURANCE TEST
TEST ENGINEER:
NAME OF RIG: VDR II
PROJECT & ENG. ORDER NO.:

SHEET 1 OF 10 DATE 1/16/70
TEST PLAN NO.:
MODEL NO.:
PART NO.:
SERIAL NO.:
OPERATORS: H. KOLNSBERG, D. McCANN

DATE	TIME	$T_{U_{IN}}$	$T_{U_{OUT}}$	$T_{U_{TK}}$	$T_{H_{IN}}$	$T_{H_{OUT}}$	$T_{C_{IN}}$	$T_{C_{OUT}}$	F_U	F_H	F_C	F_{N_2}	P_{MI}	P_{MO}	P_G	SOLIDS	COND	PWR	PUMPS	V_{PW}	V_{DIV}	
		°F	°F	°F	°F	°F	°F	°F	Lb/Hr	Lb/Hr	Lb/Hr	Ml/Min	Scale	Scale	in. H_2O	μΩ 10^{-3}	μΩ $\times 10^{-1}$	Watts	No. ON	Ml	—	
11/16	1530	146	136	150	157	147	49	53	97	328	275	650	61.7	50	12.4	22.5	4	120	2	—	—	
	1600	143	138	147	155	150	48	52	90	324	273	400	62.0	50.6	10.3	22.5	3.5	115	2	—	—	
	1800	149	137	152	163	162	48	52	88	328	273	375	62.5	51.5	10.0	23.5	4	120	2	—		
	2000	140	126	140	150	145	49	53	79	334	273	375	62.4	52.0	9.7	23.5	4	118	2	—		
	2200	142	121	145	158	150	49	56	90	328	273	375	62.5	51.5	9.7	24.0	4	120	2	—		
	2400	142	119	145	158	150	50	58	101	324	273	375	62	50.5	10.0	24.0	4	120	2	—		
11/17	0200	140	111	138	152	142	46	62	104	294	273	300	62	50	10.0	29.0	4	118	2	—		
	0400	130	104	131	146	138	44	60	104	294	273	300	62.5	50.5	10.0	29.0	4	115	2	—		
	0630	126	100.5	128	142.5	133	43	54	104	294	273	300	62	50.5	10.0	29.0	4	111	2	—		
	0800	124	97	126	141	132	43	54	105	294	269	300	62	50.5	11.2	24.0	5	117	2	—		
	0900	132	123	137	146	139	40	43	90	294	266	500	62	51	11.5	24.5	7.5	120	2	1225		
	1100	140	130	143	149	145	42	45	92	294	266	675	62.2	51.2	12.7	24.5	5.0	118	2	250		
	1300	142	132	145	155.5	149	42.6	45.6	90	298	266	675	62.3	51.5	12.3	25.5	4.5	118	2	290		
	1400	145	135	149	159.5	153	43	47	88	311	266	700	62.2	51.8	12.3	26.0	4.3	118	2	130		
	1600	138	129	141	148	144	43	46	88	294	266	700	62.2	51.8	12.3	26	4.0	118	2	270		
	1800	140	130.5	142	148	145	43	46	86	314	266	750	62	52	13.0	26.5	3.5	115	2	—		
	2000	139.5	130	139.5	148.5	144.5	44	46	88	314	266	750	62.2	51.5	12.4	27.0	3.5	118	2	—		
11/18	0200	139.5	130	141.5	148.0	144	43	46	83	284	266	800	62.5	51.5	12.4	28.0	3.5	118	2	—		
	0600	141.5	131.5	144.5	156.0	149.0	43	46	88	270	266	800	62.5	51.5	12.4	29.0	3.5	118	2	—		
	0800	138.5	129	141	151	145	43	46	88	264	266	775	62.5	51.5	12.4	28.8	3.5	118	2	2060		
	1100	139	130	142	150	145	43	46	90	264	266	700	62.4	51.0	12.4	29	3.5	118	2	400		

REMARKS:

81413

Hamilton Standard DIVISION OF UNITED AIRCRAFT CORPORATION

SVHSER 5903
CR-111932

HSF-175.1A 1/66

Hamilton Standard DIVISION OF UNITED AIRCRAFT CORPORATION
WINDSOR LOCKS, CONNECTICUT 06096

SPACE & LIFE SYSTEMS LABORATORY

LOG OF TEST

TYPE OF TEST: 90 DAY ENDURANCE
TEST ENGINEER:
NAME OF RIG: VDR II
PROJECT & ENG. ORDER NO.:

SHEET 2 OF 10
DATE:
TEST PLAN NO.:
MODEL NO.:
PART NO.:
SERIAL NO.:
OPERATORS: H. KOLNSBERG, D. McCANN

DATE	TIME	$T_{U_{IN}}$	$T_{U_{OUT}}$	$T_{U_{TK}}$	$T_{H_{IN}}$	$T_{H_{OUT}}$	$T_{C_{IN}}$	$T_{C_{OUT}}$	F_U	F_H	F_C	F_{N_2}	P_{M_I}	P_{M_O}	P_G	SQ_{ID_S}	CO_{N_D}	P_{W_R}	P_{UMP_S}	V_{PW}	V_{DIV}	
/	/	°F	°F	°F	°F	°F	°F	°F	lb/hr	lb/hr	lb/hr	ml/min	Scale	Scale	in H_2O	$\mu\Omega \times 10^{-3}$	$\mu\Omega \times 10^{-1}$	watts	NO. ON		/	
11/18	1500*	138	130	140	154	149	49	51	92	255	273	650	62.2	51.0	12.4	29.5	4.0	118	2	500		
11/18	1530	137	125.5	139.5	148	142	50	55	98	250	273	700	62.0	52.7	13.9	29.5	4.5	118	2	91		
11/18	2000	150.9	136.2	154	171.5	155.6	51.7	57.5	92	275	312⊗	470	62.2	52.9	13.9	31.5	5.0	117	2	—		
11/18	2400	133.5	122.5	135.7	144	139.5	51.5	56	90	250	312⊗	600	62.2	52.7	11.6	31.8	5.0	120	2	—		
11/19	0900	136.0	123.0	139.0	150.0	143.0	52.5	56.0	92	275	312	600	62.2	53.0	11.6	33.0	4.2	120	2	—		RA
	0800	134	123	130	143	139	52	56	90	264	296+	575	62.2	52.2	11.8	33.0	4.5	118	2	3150		
	1100	138	126	141	147	138	45	50	87	264	288	600	62.0	52.0	11.8	33.5	4.2	118	2	510		
	1600	138	125	140	152	144	45	50	88	264	288	600	62.0	52.0	12.1	34.5	4.2	118	2	940		
	2000	142	131	145	153	148.5	45	50	90	294	288	750	62.0	52.0	11.8	35.8	5.4	118	2	—		MM
	2400	141	129.5	140	154	147.5	46	52	92	289	304	960	62.0	51.5	10.6	36.5	5.4	120	2	—		MM
11/20	0800	144	132	147	159	152	46	52	94	270	292	900	62.0	51.4	11.5	38.0	6.0	118	2	3320		++
	1100	141	126	144	155	148	47	55	92	264	292	300	61.8	52.2	14.9@	38.0	6.0	118	2	720	→	
	1600	147	131	150	157	152	45	55	96	264	288	250	61.4	51.3	12.8	40.0	7.5	118	2	1380	←	
11/21	0800	142	125	144	157	149	46	54	92	275	288	200	61.3	51.2	12.7	43.0	9.0	118	2	4390		
11/22	1100	141	126	144	158	148	44	52	101	275	296	200	61.3	51.0	12.7	46.5	11.0	116	2	—		MOD
11/22	1200	140	126	143	158	147	44	52	103	275	296	200	61.2	50.8	12.4	46.5	10.3	118	2	7000		①
11/23	0800	141	128	143	158	147	45	53	115	255	284	150	61.0	49.5	13.8	47.0	14.5	114	2	5370		
	1200	135	116	136	153	142	46	58	117	255	281	160	60.2	49.5	11.8	45	14.0	115	2	320		②
	1600	141	127	143	158	147	44	53	115	255	281	<100	60.2	49.2	14.8	47	13.0	118	2	1480		
11/24	0800	145	133	144	155	150	45	54	127	255	281	150	60.2	48.5	13.3	47.5	13.5	118	2	4500		
	1300	140	129	143	—	—	45	54	129	255	281	100	60.2	47.5	12.7	46.0	15.5	120	2	1345		③

REMARKS:
* INSTALLED 3RD MODULE
⊗ FLOAT IN FLOWMETER APPEARS STUCK
+ FLOW VARIED AS TEST - FLOAT FREE
@ RESET TO 4.0
++ INSTALLED 4TH MODULE 0840
① SAMPLE DRAWN FROM URINE RETURN FOR SOLIDS DETERMINATION
② PW VALVE CLOSED SINCE ~ 0830 BACTERIA SAMPLING
③ HW OFF TO CHECK THERMOSTAT

MM MODIFIED H.K. @ 1/15/70 ON 3RD COLUMN AND

81415

HSF-175.1A 1/66

Hamilton Standard DIVISION OF UNITED AIRCRAFT CORPORATION
WINDSOR LOCKS, CONNECTICUT 06096

SPACE & LIFE SYSTEMS LABORATORY

LOG OF TEST

TYPE OF TEST: 90 DAY ENDURANCE
TEST ENGINEER:
NAME OF RIG: VDR II
PROJECT & ENG. ORDER NO.:

SHEET 3 OF 10 | DATE
TEST PLAN NO.
MODEL NO.
PART NO.
SERIAL NO.
OPERATORS: H. WOLNSBERG, D. McCANN

DATE	TIME	$T_{U_{IN}}$ °F (1)	$T_{U_{OUT}}$ °F (2)	$T_{U_{TK}}$ °F (3)	$T_{H_{IN}}$ °F (4)	$T_{H_{OUT}}$ °F (5)	$T_{C_{IN}}$ °F (6)	$T_{C_{OUT}}$ °F (7)	F_U lb/hr	F_H lb/hr	F_C lb/hr	F_{N_2} ml/min	P_{M_1} Scale	P_{M_0} Scale	P_G in. H_2O	S_{OLIDS} μa ×10⁻³	C_{OND} μa ×10⁻¹	P_{W_R} watts	P_{UMP_S} No. on	V_{PW} ml	V_{DIV}	
11/24	1600	151	137	145	155	148	45	55	130	245	281	110	60.2	48.0	13.3	48.5	12.	117	2	760	—	①
11/25	0800	142	125	149	159	156	45	54	136	216	281	<100	60.2	47.5	14.5	52	13.5	115	2	4520	—	②③
	1200	150	138	152	163	158	43	54	133	226	281	<100	58.6	46.4	13.0	38	13.5	118	2	1110	—	
	1600	143	130	148	155	147	47	55	129	226	281	<100	59.0	46.5	13.9	38	6.0	118	2	1195	—	④
11/25	1950	141	126	144	153	146	49	59	113	226	242	8.5	60.5	30	11.8	40.5	3.0	125	2	—	—	⑤
11/26	1030	138	124	142	151	143.5	48	55	101	221	242	125	60.2	31	13.9	42.5	5.5	119	2	3802	—	
	1945	138	122.5	139	149	142	48	55	96	220	237	225	60.5	39	12.4	42.5	7.0	119	2	1574	—	
11/27	1130	137	122	138	148.5	142	47.5	54	95	216	242	175	61	38.5	13.1	41.5	6.5	122	2	3360	—	
11/28	1000	136	121	138	148.5	142	47	54	90	216	234	240	59.8	37.5	12.7	45.5	8.0	122	2	4315	—	
11/29	1200	138	124	139.5	151	143	48	54	103	211	226	200	59.2	40.0	12.4	47.5	12.0	120	2	5125	—	
11/30	0800	136.5	123	138.5	150.5	142	47	54	108	216	203	230	58.0	37.6	12.7	50.0	13.0	122	2	3850	—	
	0900	133	121	137.5	150	140	46	53	108	216	203	230	58.2	37.2	12.4	49.0	12.5	133	2	200	—	⑥
	1100	138	125	139	153	144	46	53	113	216	203	200	58.2	37.5	12.7	49.5	14.5	120	2	400	—	
	1400	142	128	144	158	148	47	54												680	—	⑦
	1600	148	132	149	163	154	48	57	115	245	195	1050				50.5	18.0	122	2	50	—	
12/1	0800	141	127	141	155	147	46	53	120	226	195	230	57.5	37.0	12.1	55.0	19.5	120	2	3720	—	⑧⑨
	1200	145	132	148	162	152	47	56.5	122	226	195	230	57.8	35.7	12.7	51.5	22.5	120	2	935	—	
	1600	150	147	152	164	155	153	147	145	176	0	620	56.0	46.5	9.2	53.0	24.0	120	2	685	—	⑩
12/2	0800	146	132	149	162	153	47	56	127	216	172	230	57.8	47.8	13.3	53.0	27.0	120	2	3890	—	
	1200	147	134	150	169	165	47	57	122	216	179	230	57.3	47.0	12.1	54.0	27.2	120	2	980	—	
12/3	0800	145	132	149	162	153	46	55	110	216	179	320	58.3	47.6	11.5	54.5	27.5	120	2	4330	—	
	1200	148	134	151	165	156	45	55	115	216	179	320	58.1	47.8	12.1	54.5	35.5	120	2	960	—	

REMARKS:
① AUTO DIVERT TURNED OFF
② DIVERT ON - NO AUTO DIVERT. CTLEVEL LOW
③ SLUDGE DUMP ~1005
④ AUTO DIVERT OFF
⑤ COND. SENSORS ALMOST DRY
⑥ AUTO FILL ON DURING READING
⑦ MANUALLY TRIGGERED HEAT CYCLE
⑧ AUTO FILL SWITCH OFF SINCE PREVIOUS READING TURNED ON ~0815
⑨ REPLACED FILTER ~125 ML LOST.
⑩ HEATCYCLE ON 1430

81427

Hamilton Standard DIVISION OF UNITED AIRCRAFT CORPORATION

SVHSER 5903
CR-111932

HSF-175.1A 1/66

Hamilton Standard DIVISION OF UNITED AIRCRAFT CORPORATION
WINDSOR LOCKS, CONNECTICUT 06096

SPACE & LIFE SYSTEMS LABORATORY

LOG OF TEST

TYPE OF TEST: 90 DAY ENDURANCE
TEST ENGINEER:
NAME OF RIG: VDR II
PROJECT & ENG. ORDER NO.:

SHEET 4 OF 10 | DATE:
TEST PLAN NO.:
MODEL NO.:
PART NO.:
SERIAL NO.:
OPERATORS: H. KOLNSBERG, D. McCANN

DATE	TIME	$T_{U_{IN}}$ °F	$T_{U_{OUT}}$ °F	$T_{U_{TK}}$ °F	$T_{H_{IN}}$ °F	$T_{H_{OUT}}$ °F	$T_{C_{IN}}$ °F	$T_{C_{OUT}}$ °F	F_U lb/hr	F_H lb/hr	F_C lb/hr	F_{N_2} ml/min	P_{M_1} scale	P_{M_0} scale	P_C in.H_2O	S_{O_2} μa^{1DS} $\times 10^{-9}$	$C_{O_{N.D.}}$ μa $\times 10^{-1}$	P_{W_R} watts	$P_{M_{PS}}$ No. on	V_{PW} ml	V_{DIV}
12/4	0800	141	127	144	157	148	45	53	99	235	179	450	58.2	47.7	10.9	55.5	16.5	122	2	3430	--
	1100	143	127	146	158	150	45	53	92	235	179	410	57.7	48.8	11.5	55.5	12.0	125	2	575	—
12/5	1000	144	129.5	147	159	150	44	52.5	114	216	176	375	58.6	48.4	11.2	58	24	122	2	4296	—
12/6	1030	①					44	53	114	216	172	450	59.8	48.5	11.2	59	25.5	118	2	4470	—
	1220	140	128	143	157	148	44	53	114	216	172	450	59.5	49	11.2	58	26	120	2	—	—
12/7	0815	141	128	148	157	148	45	54	106	186	164	475	60.8	50.5	10.9	59	24.5	122	2	3505	—
12/8	0800	142	130	146	157	149.5	43.5	50.5	106	186	164	475	60.8	50.0	10.9	60.5	29.0	122	2	2950	—
12/9	0800	143	134	143	158	150	45	53	127	176	164	330	58.2	43.3	11.5	60.5	41.0	125	2	2320	—
	1200	141	133	144	159	151	45	53	115	172	167	330	54.3	39.0	11.5	60.5	40.0	126	2	370	—
12/10	0900	128	113	141	162	154	41.5	50	76	155	150	1000	61.2	48.2	10.0	58.0	39.0	172	3	185	—
	1200	135	124	137	159	151	46	53	106	149	150	420	57.6	41.5	10.0	59.0	49.0	172	3	265	—
	1600	143	135	145	160	151	46	54	136	165	148	850	58.8	40.5	10.0	61	53	127	2	55	②
12/11	0800	143	134	145	157	149	46	53.5	136	165	148	500	61.5	52.3	10.9	48.0	15.5	122	2	1960	—
	1600	144	128	146	157	152	43	53	110	382	195	720	62.2	53.7	10.3	48.0	22.0	122	2	390	—
12/12	1530	147	130	149	160	154	44	55	106	387	192	850	61.8	53.0	9.7	52.0	9.0	122	2	4140	—
12/13	1530	143	127	145	156	151	46	57	106	402	181	670	61.7	53.0	9.7	51.0	9.0	118	2	3680	—
12/14	0800	141	125	143	156	149	39	50	83	480	187	700	61.8	53.0	9.4	52.5	9.5	117	2	2810	—
	1200	147	132	149	159	155	53	62	145	570	214	400	61.8	52.3	11.5	53.5	11.5	121	2	645	—
	1300	148	128	150	160	156.5	42	49	106	569	242	325	61.8	52.5	12.7	53.5	12.2	120	2	200	—
	1500	151	132	153	163	160	42	49	115	569	251	260	61.8	52.5	12.1	54.5	12.5	122	2	340	—
12/15	0800	148	136	150	160	157	41	48	113	554	250	240	61.8	52.7	12.4	55.8	18.0	120	2	2515	—
	1600	150	131	152	164	159	38	47	99	460	250	1120	62.8	54.5	9.7	54.0	18.0	122	2	605	—

REMARKS:
① TEMP. RECORDER MALFUNCTION
② SLUDGE DUMP 1700 - 12.78 # @ 1.216 S.G.

81418

Hamilton Standard DIVISION OF UNITED AIRCRAFT CORPORATION

SVHSER 5903
CR-111932

HSF-178.1A 1/66

Hamilton Standard DIVISION OF UNITED AIRCRAFT CORPORATION
WINDSOR LOCKS, CONNECTICUT 06096

SPACE & LIFE SYSTEMS LABORATORY
LOG OF TEST

TYPE OF TEST: 90 DAY ENDURANCE
TEST ENGINEER:
NAME OF RIG: VDE II
PROJECT & ENG. ORDER NO.:

SHEET 5 OF 10 | DATE
TEST PLAN NO.:
MODEL NO.:
PART NO.:
SERIAL NO.:
OPERATORS: H. KOLNSBERG, D. McCANN

DATE	TIME	$T_{U_{IN}}$ °F	$T_{U_{OUT}}$ °F	$T_{U_{TIC}}$ °F	$T_{B_{IN}}$ °F	$T_{B_{OUT}}$ °F	$T_{C_{IN}}$ °F	$T_{C_{OUT}}$ °F	F_U lb/hr	$F_{B_{IN}}$ lb/hr	$F_{B_{OUT}}$ lb/hr	F_{N_2} ml/min	P_{M_1} scale	P_{M_0} scale	$P_{C_{IN}}$ in. H_2O	$S_{O_{10_5}}$ μm $\times 10^{-3}$	$C_{O_{10}}$ μm $\times 10^{-1}$	$P_{U_{PC}}$ WATTS	$P_{U_{PC}}$ No. on	V_{PW} ml	V_{DV}
12/16	0800	149.5	131	153	163	159	38	46	88	451	250	70	63.7	55.6	8.3	55.0	14.0	120	2	2040	—
	1600	147	131	149.5	160	156	38.5	46.5	106	451	250	1025	62.2	53	8.6	56.5	13.5	125	2	1160	—
12/17	0830	147.3	134	150	159.5	156	38	45.5	113	460	242	1100	61.4	52.0	7.7	57.0	14.0	125	2	2215	—
	1600	147	129	150	160	156	40	48	86	451	234	1120	61.3	53.8	9.4	56.2	19.0	122	2	725	—
12/18	0800	144	129	145	156	152	40	49	129	470	230	1100	60.2	51.3	9.4	60.5	11.0	120	2	4675	—
	1600	148	136	148	159	154	39.5	49.5	131	441	230	1050	60.2	51.0	9.4	63.0	11.0	126	2	2310	—
12/19	1100	146.5	131	146.5	158.5	154	40	49.5	134	441	226	1000	59.6	50.0	8.9	64.5	14.5	122	2	5585	—
12/20	1230	148	132	147	160	155	42	51	134	431	226	900	59.5	49.0	9.4	65.5	17.5	125	2	6990	—
12/21	0800	149	133	148	160	156	41	51	138	392	221	900	59.8	49.0	9.2	66.0	19.5	122	2	5110	—
	1600	149	129	149	161	156	41	51	137	412	222	720	60.0	49.0	9.2	66.0	19.7	124	2	1980	—
12/22	0800	147	133	147	160	155	42	52	145	412	218	820	59.2	48.8	9.4	66.0	23.0	122	2	3840	—
	1400	147	134	147	160	155	42	52	143	412	218	820	59	49	8.9	66.0	22.5	125	2	1530	—
12/23	0930	147	134.5	146	160	155	41	51	177	412	218	700	58	46.6	10.0	70.5	19	168	3	5645	—
12/24	1000	147.5	135.5	147.7	160	155	42	51	177	382	215	700	56.7	44.4	9.4	68	22	168	3	7126	—
12/25	1530	147.5	136	148	160	155	41	52	182	402	211	770	56	45	9.4	67	23	168	3	8052	—
12/26	1930	148	136	146	160	155	41	51	186	397	211	660	55	43	9.4	68.7	23	173	3	7725	—
12/27	1930	146	135	146	159	154	42	52	202	377	218	690	55	41.7	9.7	68.0	26	166	3	6260	—
12/28	0800	149	135	146	159	154	43	52	188	387	207	590	55	42.8	9.4	68.5	27	173	3	3170	—
	1600	140	128	140	160	152	43	51	159	343 (1)	207	570	56.8	44.0	9.4	71.0	25	128	2	1635	—
12/29	0800	148	139	149	161	155	43	49	166	304	203	700	56.2	39.0	9.1	68.5	37	128	2	1470	—
	1030	149	140	150	162	157	42	48	163	294	203	730	56.2	36.5	8.3	68.5	39.5	173	3	93	—
	1600	144	124	147	158	152	42	52	76	319	203	680	59.4	50.2	10.0	42	10.5	123	2	~~[illegible]~~ 1165	—

REMARKS:
(1) NEW HW PUMP ~1550

81420

Hamilton Standard DIVISION OF UNITED AIRCRAFT CORPORATION

SVHSER 5903
CR-111932

HSF-178.1A 1/66

Hamilton Standard DIVISION OF UNITED AIRCRAFT CORPORATION
WINDSOR LOCKS, CONNECTICUT 06096

SPACE & LIFE SYSTEMS LABORATORY

LOG OF TEST

TYPE OF TEST: 90 DAY ENDURANCE
TEST ENGINEER:
NAME OF RIG: VDR II
PROJECT & ENG. ORDER NO.:

SHEET 6 OF 10 | DATE:
TEST PLAN NO.:
MODEL NO.:
PART NO.:
SERIAL NO.:
OPERATORS: H. KOLNSBERG, D. McCANN

DATE	TIME	$T_{U_{IN}}$ °F	$T_{U_{OUT}}$ °F	$T_{U_{TK}}$ °F	$T_{H_{IN}}$ °F	$T_{H_{OUT}}$ °F	$T_{C_{IN}}$ °F	$T_{C_{OUT}}$ °F	F_U lb/hr	F_H lb/hr	F_C lb/hr	F_{N_2} ml/min	P_{M_I} scale	P_{M_O} scale	P_{U_R} in. H_2O	Sol_{IDS} µm ×10⁻³	$Cond_D$ µm ×10⁻¹	P_{W_R} watts	$P_{U_{MP}}$ No. cycles	V_{PW} ml	V_{DIV}
12/30	0800	143	127	144	155	149	42	52	100	306	203	670	58.8	46.5	9.7	45.0	6.0	165	3	4160	—
	1600	148	128	151	162	156	43	52	97	299	203	670	60.1	51.3	9.7	47.0	6.0	125	2	2010	—
12/31	0800	145	127	148	160	153	43	52	89	276	203	770	60.6	51.2	10.0	48.5	6.5	120	2	3730	—
	1600	144	126	146	159	151	43	53	108	274	203	660	58.8	52.3	9.4	50	7.5	118	2	2185	—
1/1/71	1430	144	127	146	159	151	43	53	117	270	203	570	57.8	50.8	9.4	56.5	7.5	118	2	7035	—
1/2/71	1400	140	125	142	160	145.5	43	53	115	141	195	700	58.8	51	10.9	52.5	6.5	122	2	6020	—
1/3	1200	137	123	140	158	143	42	52	118	142	195	0/700	58.2	52.6	0/9.7	58	50.0	125	2	5705	— (1)
1/4	0800	140	125	143	161	147	43	53	115	142	195	680	59.2	52.0	10.3	61	17.0	118	2	4950	—
	1500	143	127	145	160	150	42	53	115	181	195	570	58.8	51.8	10.3	61	15.5	116	2	1745	—
1/5	0800	144	129	147	162	152	43	53.5	120	176	191	680	58.2	51.6	10.9	62	15.0	117	2	4605	—
	1600	145	129	147	162	152	44	54	120	178	191	570	58.2	49.7	10.6	61	15.0	125	2	2080	—
1/6	0800	144.5	129	146.5	162	152	43	53	117	172	191	650	59.0	50.8	10.3	62	15.0	125	2	4270	—
	1600	143	127	146	162	151	43	53	120	172	191	630	59.0	51.3	10.0	65.5	15.0	115	2	1800	—
1/7	0800	142	126	144	160.5	150	43	53	117	172	191	630	58.8	51.0	10.6	65	15.0	118	2	4010	—
	1600	145	128	148	161	154	42	52	117	299	187	590	59.0	50.0	10.3	66.5	15.3	123	2	2025	—
1/8	0800	143	128	146	159	152	42	52	121	289	187	660	59.0	50.0	10.6	65	18.0	120	2	4250	—
	1600	142	127	145	159	151	42	52	125	284	187	610	59.0	50.5	10.3	65.5	22.0	125	2	2020	—
1/9	1400	126	110	131	157	139	40	47	115	189	226	600	59.7	52.3	10.9	65.5	20	124	2	4120	— (2)
1/10	1200	141.5	126	144.5	162.5	149	42	50	110	132	214	525	59.0	51.0	12.1	65.5	20.0	118	2	4605	—
1/11	0800	142	127	145	162	148	42.5	50.5	115	118	210	490	58.3	50.8	11.5	66	24	120	2	3560	—
	1600	142	127	144	162	149	43	50	110	118	218	480	58.2	49.2	11.2	62.5	25	124	2	1160	—
1/12	0800	142	135	143	162	147	43	50	186	118	210	460	53.0	46.2	11.4	60	26	165	3	1920	—

REMARKS:
(1) N_2 SUPPLY OFF - ON 1205.
(2) HOT & COLD FLUID PUMPS OFF AT 0700 - 1330

81424

Hamilton Standard DIVISION OF UNITED AIRCRAFT CORPORATION

HSF-175.1A 1/66

Hamilton Standard DIVISION OF UNITED AIRCRAFT CORPORATION
WINDSOR LOCKS, CONNECTICUT 06096

SPACE & LIFE SYSTEMS LABORATORY

LOG OF TEST

TYPE OF TEST: 90 DAY ENDURANCE TEST
TEST ENGINEER:
NAME OF RIG: VDR II
PROJECT & ENG. ORDER NO.:

SHEET 7 OF 10 DATE:
TEST PLAN NO.:
MODEL NO.:
PART NO.:
SERIAL NO.:
OPERATORS: H. KOLNSBERG, D. McCANN

DATE	TIME	$T_{U_{IN}}$ °F	$T_{U_{OUT}}$ °F	$T_{U_{TK}}$ °F	$T_{H_{IN}}$ °F	$T_{H_{OUT}}$ °F	$T_{C_{IN}}$ °F	$T_{C_{OUT}}$ °F	F_U lb/hr	F_H lb/hr	F_C lb/hr	F_{W_2} ml/min	P_{M_1} scale	P_{M_0} scale	P_{C_F} in. H_2O	C_{ELLS} μmho ×10⁻³	C_{OND} μmho ×10⁻¹	P_{W_F} watts	P_{UMP} No. of 6	V_{PW} ml	
1/12	1600	145	125	148	159	153	42	52	79	392	211	480	59.3	53.0	12.2	40.5	9.2	122	2	2045	
1/13	0800	143	122	147	157	152	42	52	78	402	207	450	60.5	52.7	11.5	48	8.7	125	2	4310	
	1500	143	124	147	157	152	42	53	82	402	203	430	60.6	54.3	11.5	46	9.0	123	2	1770	
1/14	0800	143	123	147	158	152	43	53	81	422	203	430	60.2	54.0	11.5	49	8.0	120	2	4475	
	1600	146	129	148	160	154	43	53	98	422	203	570	58.5	52.0	11.5	50.5	8.0	170	3	2055	
1/15	0800	146	134	148	160	154	43	53	138	402	199	450	56.5	47.8	11.8	54.0	8.0	167	3	4785	
	1500	146	127	149	160	154	43	53	83	368	199	500	60.0	53.3	12.1	52	8.0	122	2	1800	
1/16	0900	145	125	150	160	155	43	52	64	323	195	570	60.8	54.8	10.9	55	9.0	119	2	4670	
1/17	1000	146	125	150	161	156	43	53	69	368	195	530	60.4	54.4	11.5	58.5	10.0	118	2	6520	
1/18	0800	145	123	149	161	155	44	53	69	333	195	1360	60.4	54.6	6.8	59.5	8.5	118	2	5680	
"	1600	146	128	150	160	156	43	53	81	362	195	680	59.8	53.0	9.7	61.0	9.5	167	3	1800	
1/19	0800	149	139	150.5	161	156	43	53	149	368	195	570	56.0	46.4	10.3	60	19.0	164	3	4275	
	1600	145	124	148	160	154	42	52	76	338	187	520	60.3	54.8	10.6	60	19.0	123	2	1770	
1/20	0800	145	126	149	160	155	43	52	81	368	187	550	60.3	54.2	10.6	62	15.0	120	2	3700	
	1600	148	134	150.5	161	156	43	52	90	368	187	540	59.4	53.0	10.3	63	20.5	123	2	1480	
1/21	0800	145	125	147	161	157	43	50	71/41	382	187	630	60.7	54.5	10.3	64	18	118	2	2800	
	1600	148	132	151	162	158	42	51	122	396	187	570	55.0	48.0	10.3	66	18	169	3	1080	①
1/22	0800	150	140	151	162	159	43	50	122	372	187	610	56.6	46.5	9.7	65	17.5	163	3	1735	
	1600	148.5	140	150	158.5	154	43	50	149	372	183	720	53.7	40.2	9.7	64	22	163	3	560	②
1/23	0800	142.5	140	149.5	159	155	42	50	156	372	180	725	52.0	35.0	9.4	60.5	33.5	168	3	985	
	1100	146	136	142.5	158	151	42.5	53	140	296	180	650	55.0	46.3	10.8	41	21.5	162	3	530	
	1400	146	136	147	157	151	43	53.5	140	286	180	600	55.2	46.2	10.9	44	11	169	3	822	

REMARKS:
① 3RD URINE PUMP ON 1200
② V_{PW} ESTIMATED

84738

Hamilton Standard DIVISION OF UNITED AIRCRAFT CORPORATION

SVHSER 5903
CR-111932

HSF-175.1A 1/66

Hamilton Standard DIVISION OF UNITED AIRCRAFT CORPORATION
WINDSOR LOCKS, CONNECTICUT 06096

SPACE & LIFE SYSTEMS LABORATORY

LOG OF TEST

TYPE OF TEST: 90 DAY ENDURANCE TEST
TEST ENGINEER:
NAME OF RIG: VDR - II
PROJECT & ENG. ORDER NO.:

SHEET 8 OF 10 DATE:
TEST PLAN NO.:
MODEL NO.:
PART NO.:
SERIAL NO.:
OPERATORS: H. KOLNSBERG, D. McCANN

DATE	TIME	TEMP. URINE IN	TEMP. URINE OUT	TEMP. URINE CYCLE TANK	TEMP. HOT WATER IN	TEMP. HOT WATER OUT	TEMP. COOLANT IN	TEMP. COOLANT OUT	FLOW URINE	FLOW HOT WATER	FLOW COOLANT	FLOW N_2	PRESS. MOD. IN	PRESS MOD OUT	PRESS ΔP	SOLIDS COND.	PROD. WATER COND.	PWR.	PUMPS	VOL. PROD. WATER	VOL. DIVERT WATER	
—	—	°F	°F	°F	°F	°F	°F	°F	lb/hr	lb/hr	lb/hr	MLMIN	Scale	Scale	in. H_2O	1000 μΩ	10 μΩ	WATTS	#ON	ML	ML	
1/24	1000	142	129	143	157	150	39	49	138	510	181	900	56.3	42.5	9.2	52	7.5	165	3	2553	—	①
	1500	148	137	149.5	158	154	42	52	139	500	185	670	56.2	47.0	10.0	50.5	9.5	163	3	1480	—	
1/25	0800	147	137	148	157	152	43	53	140	510	185	680	56.0	46.7	10.0	54	10.0	160	3	4830	—	
	1600	147	132	149	158	153	44	55	127	485	185	620	56.7	50	10.3	57.5	10.5	167	3	2475	—	
1/26	0800	148	134	150	159	154	44	55	132	475	185	600	55.6	48.5	11.5	59.0	9.5	167	3	5560	—	
	1600	148	134	150	158	153	43	55	136	475	185	580	54.2	46.6	11.5	62.0	9.5	165	3	2760	—	
1/27	0800	144	131	145	154	149	42.5	53	139	466	185	600	54.0	46.6	11.2	64.0	9.8	168	3	5120	—	
	1600	146	134	149	159	152	43	54	140	343	185	580	54.2	46.6	11.5	64.5	10.2	168	3	2410	—	
1/28	0800	149	135	151	160	155	42	54	144	466	185	510	55.0	46.7	11.2	64.5	13.0	168	3	5420	—	
	1600	149	135	150	160	154	42	53	144	466	185	570	55.0	46.2	11.5	64.5	14.5	170	3	2290	—	
1/29	0800	144	133	146	161	157	41	50	148	466	185	530	54.0	40.0	11.5	56	25.0	174	3	4260	—	
	1600	148	133	150	159	153	42	54	127	461	185	500	57.1	46.3	10.9	52.5	7.0	168	3	2840	—	
1/30	1900	151	138	153	163	157	42	51	127	446	185	490	56.4	44.6	10.9	60.0	7.5	168	3	9310	—	
1/31	1200	150	137	152	161	156	41	49	128	422	185	500	56.7	44.0	10.6	61.0	9.0	168	3	5110	—	
2/1	0800	148	134	150	159	154	42	52	137	402	185	330	56.3	48.2	13.3	61.0	11.0	155	3	5600	—	
	1300	148	134	149	159	152	43	53	136	314	185	400	56.3	47.6	14.5	62.0	10.0	169	3	1385	—	
	1600	140	125	142	154	147	41	52	117	318	177	840	57.6	47.8	9.7	61.0	16.0	172	3	100	—	②
2/2	0800	147	134	149	159	153	41	52	143	318	177	660	56.7	45.8	10.9	62.5	10.0	166	3	4180	—	
	1100	147	134	149	159	153	41	52	140	318	177	660	57.0	45.8	11.2	62.0	10.0	172	3	695	—	
	1600	142	128	146	158	152	41	51	113	309	177	700	58.8	49.2	10.3	60.5	12.0	168	3	495	—	
2/3	0800	144	132	146	157	151	40	50	140	300	177	690	56.8	46.8	10.3	58.0	12.0	166	3	2965	—	

REMARKS:
① TRANSIENT READING - HOT WATER PUMP OFF FROM 2150 1/28 TO 0950 1/24
② HEAT CYCLE TEMP. EFFECT ON PW CONDUCTIVITY READING—

84740

Hamilton Standard DIVISION OF UNITED AIRCRAFT CORPORATION

SVHSER 5903
CR-111932

HSF-179.1A 1/68

Hamilton Standard DIVISION OF UNITED AIRCRAFT CORPORATION
WINDSOR LOCKS, CONNECTICUT 06096

SPACE & LIFE SYSTEMS LABORATORY

LOG OF TEST

TYPE OF TEST: 90 Day ENDURANCE TEST
TEST ENGINEER:
NAME OF RIG: VDR II
PROJECT & ENG. ORDER NO.:

SHEET 9 OF 10 DATE:
TEST PLAN NO.:
MODEL NO.:
PART NO.:
SERIAL NO.:
OPERATORS: H. KOLNSBERG, D. McCANN

DATE	TIME	T UIN °F	T UOUT °F	T UCT °F	T HWIN °F	T HWOUT °F	T CWIN °F	T CWOUT °F	F U lb/hr	F HW lb/hr	F C lb/hr	F N_2 ml/MIN	P MI SCALE	P MO SCALE	P GAP in. H_2O	SOLIDS U $\mu mho \times 10^{-3}$	COND PW $\mu mho \times 10^{-1}$	PWR WATTS	PUMPS No. ON	VOL PW ML	
2/3	1600	146	130	148	160	156	40	50	156	461	187	690	55.8	43.9	9.4	—	15.8	175	3	790	
2/4	0800	147	129	150	162	158	40.5	50.5	82	461	187	710	60.8	52.2	10.3	51.0	6.5	163	3	4520	
	1600	149	133	151	161	156	42	53	115	461	187	730	59.0	52.7	10.9	50.8	8.5	161	3	1925	
2/5	0800	151	139	153	162	158	42	52	129	475	187	690	57.8	50.6	10.9	55.0	8.2	170	3	3910	
	1600	144/146	129/134	141/149	159	154	41	51	137	465	187	670	56.3	48.8	10.9	55.3	9.8	165	3	1620	①
2/6	1000	148.5	138.5	151.5	160.5	156.5	42	50	133	490	187	650	56.5	48.7	10.9	60.0	8.7	170	3	3345	
	2000	150	137	152	160	155	43	53	140	490	187	700	56.4	49.0	12.4	57.5	10.0	162	3	2300	
2/7	1300	145	134	148	156.5	150.5	42	50.5	138	485	187	625	57.0	49.4	11.5	58.5	10.3	162	3	3465	
2/8	0800	144	133	145	160	155	41.5	49.5	145	485	187	620	55.0	46.8	11.5	60.5	10.8	170	3	3240	
	1600	146	135	148	159	154	41	51	140	417	191	590	55.7	47.2	11.8	59.5	13.0	169	3	1550	
2/9	0800	149	138	151	160	156	41	49	138	402	191	570	54.7	45.8	12.4	60.0	12.5	167	3	2750	
	1600	143	131	145	159	154	41	50	132	382	191	520	55.4	47.9	12.4	59.5	12.0	169	3	1280	
2/10	0800	143	132	144	159	155	40	48	142	387	191	580	55.2	45.8	11.8	57.0	14.5	169	3	2000	
	1530	138	128	135	159	154	40	47	144	387	191	590	54.7	43.0	11.8	51.5	16.5	172	3	—	
	1600	140	126	141	155	149	41	50	110	397	191	590	57.3	45.0	11.5	48.0	17.0	172	3	745	
2/11	0800	144	131	144	160	156	42	51.5	117	456	191	620	57.3	45.0	12.4	17.2	7.7	165	3	3420	
	1600	148	129.5	150	160	155.5	41	51	125	465	187	510	57.6	46.7	12.4	52.0	10.2	163	3	1780	
2/12	0800	149	136.5	151	160	156	41	50	127	471	187	510	57.2	46.2	12.7	55.0	12.0	163	3	3315	
	1200	148	137	149	159	155	41	50	129	471	191	575	56.8	43.9	12.7	54.0	10.5	170	3	844	
	1400	149	138	150	160	155.5	41	49.5	129	—	191	—	56.8	44.0	—	53.5	10.5	168	3	352	②
	1600	147	134.5	148.5	159	155	41	50	117	461	191	550	57.4	47.8	13.0	54.7	9.5	168	3	444	③

REMARKS:
① URINE TEMP READINGS BEFORE/AFTER SAMPLING BOTTLE REPAIR - SEE LOG.
② MODULE #3 REMOVED FROM 1200 - 1400
③ MODULE #2 REMOVED FROM 1400 - 2/12 TO 1310-2/13

84611

Hamilton Standard DIVISION OF UNITED AIRCRAFT CORPORATION

SVHSER 5903
CR-111932

HSF-175.1A 1/66

Hamilton Standard DIVISION OF UNITED AIRCRAFT CORPORATION
WINDSOR LOCKS, CONNECTICUT 06096

SPACE & LIFE SYSTEMS LABORATORY

LOG OF TEST

TYPE OF TEST: 90 DA. ENDURANCE TEST
TEST ENGINEER:
NAME OF RIG: VDK II
PROJECT & ENG. ORDER NO.:

SHEET 10 OF 10 DATE 2-13-71
TEST PLAN NO.:
MODEL NO.:
PART NO.:
SERIAL NO.:
OPERATORS: H. KOLNSBERG, D. McCANN

DATE	TIME	T UIN °F	T UOUT °F	T UCT °F	T HWIN °F	T HWOUT °F	T CWIN °F	T CWOUT °F	F U lb/hr	F HW lb/hr	F CW lb/hr	F N_2 ml/MIN	P ME SCALE	P MO SCALE	P GAP in.H_2O	SOLIDS U $\mu\Omega^{-1} \times 10^{-3}$	COND PW $\mu\Omega^{-1} \times 10^{-1}$	PUMPS NO. ON	VOL PW ML	PWR WATTS	
2/13	1200	149	138.5	151	160	156	40.5	48	117	465	191	700	56.3	44.0	11.6	54.5	7.5	3	3357	167	①②
2/14	1200	145	136	147	157	151	40	47.5	131	279	191	820	55.0	45.0	10.0	55.5	10.5	3	3915	167	
2/15	0800	143	133	145	160	150	40	46	130	191	187	630	56.3	43.0	10.9	55.0	10.0	3	3150	169	
"	1600	144	132	145	160	154	41	51	132	343	187	490	55.8	48.6	10.9	55.5	12.0	3	1450	169	
2/16	0800	144	132	146	160	152	40	49	135	314	187	460	56.2	48.4	10.9	56.5	14.5	3	2710	172	
	1600	143	131	144	158	153	40	49	135	402	187	590	56.3	45.5	10.3	55.5	13.0	3	1045	170	
2/17	0800	146	134	147	160	155	41	50	135	392	187	520	56.7	48.3	10.3	56.0	16.0	3	2520	172	
	1600	145	135	145	161	155	41	50	138	352	187	620	55.8	48.0	10.3	54.0	—	3	1040	152	③
2/18	0840	145	134	147	160	156	41	50	136	352	187	620	56.0	47.7	10.3	54.0	—	3	2370	152	④
	1400	146	135	148	161	154	41	50	136	348	187	420	558	47.7	14.2	54.0	—	3	690	152	
2/19	0800	147	135	149	161	155	41	50	136	338	187	410	56.2	47.2	13.9	53.0	—	3	2285	152	
	1530	143	134	145	160	153	41	49	106	338	187	630	58.0	50.7	12.4	53.0	—	3	755	154	

REMARKS:
① MODULE #2 REMOVED FROM 1400 - 2/12 TO 1310 - 2/13
② REPLACED MOD. #2 AND DISCONNECTED MOD. #1 @ 1315
③ CONDUCTIVITY SENSOR DISCONNECTED.
④ Vpw TO 0900

84744

HSF-175.1A 1/66

Hamilton Standard DIVISION OF UNITED AIRCRAFT CORPORATION
WINDSOR LOCKS, CONNECTICUT 06096

SPACE & LIFE SYSTEMS LABORATORY

LOG OF TEST

TYPE OF TEST: 90 DAY ENDURANCE TEST

TEST ENGINEER:

NAME OF RIG: VDR II

PROJECT & ENG. ORDER NO.:

SHEET 1 OF 10 | DATE:

TEST PLAN NO.:

MODEL NO.:

PART NO.:

SERIAL NO.:

OPERATORS: H. KOLNSBERG, D. McCANN

DATE	TIME	VPW	COND 0-500 μΩ	pH 4-10	BACTERIA COUNTS CFU/ML ← PW	UCT	UHT →		URINE ADDED LBS
11/17	0900	1225	92	6.6					
	1100	250	76	6.8					
	1200	—	—	—	0	0	1	SAMPLES TAKEN FOR BACTERIA COUNTS	
*	1300	290	51	6.75					
	1400	130	42	6.8					
	1600	270	39	6.75					
11/18	0800	2060	31	6.75					
	1100	400	34	6.85	1	0	0	SAMPLES TAKEN FOR BACTERIA COUNTS	
*	1500	500	36	6.6					
	1530	91	38	6.8					
11/19	0800	3150	34	6.9					
	1100	510	46	7.2	2	0	0	SAMPLES TAKEN FOR BACTERIA COUNTS	
	1600	940	48	7.3					
11/20	0800	3320	56	7.3					①
→	1100	720	62	7.1	0	1	0	SAMPLES TAKEN FOR BACTERIA COUNTS	START
	1600	1380	67	7.3					—
11/21	0800	4390	76	7.5					12.44
	0845	—	—	—	1	0	2	SAMPLES TAKEN FOR BACTERIA COUNTS	—
11/22	10:30	—	—	—	1	0	4	SAMPLES TAKEN FOR BACTERIA COUNTS	—
	1200	7000	103	8.0					16.06
11/23	0800	5370	99	8.2	6	0	0	SAMPLES TAKEN FOR BACTERIAL COUNTS	12.00

REMARKS:
* INSTALLED 3RD MODULE
① INSTALLED 4TH MODULE 0840

81414

Hamilton Standard DIVISION OF UNITED AIRCRAFT CORPORATION

SVHSER 5903
CR-111932

HSF-175.1A 1/66

Hamilto... Standard DIVISION OF UNITED AIRCRAFT CORPORATION
WINDSOR LOCKS, CONNECTICUT 06096

SPACE & LIFE SYSTEMS LABORATORY

LOG OF TEST

TYPE OF TEST: 90 DAY ENDURANCE
TEST ENGINEER:
NAME OF RIG: VDR II
PROJECT & ENG. ORDER NO.:

SHEET 2 OF 10 | DATE:
TEST PLAN NO.:
MODEL NO.:
PART NO.:
SERIAL NO.:
OPERATORS: H. KOLNSBERG, D McCANN

DATE	TIME	V_{PW}	COND	pH	BACTERIA SAMPLES PW	U_{CT}	U_{HT}	U ADDED LBS	pH U_{CT}	pH U_{HT}	
11/23	1200	320	140	8.1				—	—	—	
	1600	1480	165	7.8				7.63	—	—	
11/24	0800	4500	146	7.75	58	0	0	12.44	—	—	SAMPLES TAKEN FOR BACTERIA COUNTS
	1300	1345	169	7.6				—	5.6	3.15	
	1600	760	164	7.60				5.37	5.63	3.15	
11/25	0800	4520	216	8.3	48	0	0	—	5.8	3.1	SAMPLES TAKEN FOR BACTERIA COUNTS
	1200	1110	232	8.35				34.19	4.35	3.25	Sludge dump # 1 - 1005 19.12 lbs @ 5.6 - 1095
	1600	1195	140	7.15				—	4.80	3.25	
11/26	1030	3802	87	7.60				9.69	5.00	3.35	
	1945	1574	92	7.50				—	—	—	
11/27	1130	3360	88	7.60				12.22	5.30	3.53	
	1300	—	—	—	285	—	—	—	—	—	SAMPLE TAKEN FOR BACTERIA COUNTS
11/28	1000	4315	112	7.75				9.87	5.30	3.51	
11/29	1200	5125	140	8.05				9.0	5.55	3.40	
11/30	0800	3850	155	8.35				—	5.85	3.50	
	0900	200	146	8.60	1100	32	0	—	—	—	SAMPLES TAKEN FOR BACTERIA COUNTS
	1100	480	150	8.55				—	—	—	
	1400	650	150	8.60				—	—	—	
	1600	50	173	—				13.43	—	—	
12/1	0800	3720	212	8.90				—	6.05	3.60	
	1200	935	237	8.90	670	306	0	—	—	—	SAMPLES TAKEN FOR BACTERIA COUNT

REMARKS:

81426

Hamilton Standard DIVISION OF UNITED AIRCRAFT CORPORATION

SVHSER 5903
CR-111932

HSF-175.1A 1/68

Hamilton Standard DIVISION OF UNITED AIRCRAFT CORPORATION
WINDSOR LOCKS, CONNECTICUT 06096

SPACE & LIFE SYSTEMS LABORATORY

LOG OF TEST

TYPE OF TEST: 90 DAY ENDURANCE TEST

TEST ENGINEER:

NAME OF RIG: VCR - II

PROJECT & ENG. ORDER NO.:

SHEET 3 OF 10 | DATE:

TEST PLAN NO.:

MODEL NO.:

PART NO.:

SERIAL NO.:

OPERATORS: H. KOWSZEK, D. MCCRAKIN

	DATE	TIME	V_{DIU}	COND	pH	BACTERIA SAMPLES PW	BACTERIA SAMPLES U_{CT}	BACTERIA SAMPLES U_{HT}	U PDWD	pH U_{CT}	pH U_{HT}	S.G. U_{CT}									
			ml	μΩ					LBS												
12/1	12/1	1600	665	258	8.75				13.62				①					PRODUCT WATER PORTS BACTERIA SAMPLES - 1400			
	12/2	0800	3880	280	8.90	1300	112	0	11.19	6.0	3.60										
		1200	980	315	8.80																
	12/3	0800	4330	310	8.75	90	70	0	13.94	6.3	3.80	1.088		BACTERIA SAMPLES TAKEN - 1000							
		1200	960	325	9.0																
	12/4	0800	3430	290	9.1	40	90	0	11.87	6.1	2.1			2.5L FOR CHEM ANAL (#8) BACT. SAMP. - 1000							
		1100	575	242	9.1																
	12/5	1000	3276	262	9.17				8.0	6.17	2.37										
	12/6	1030	4470	292	9.22				7.94	6.22	2.30										
	12/7	0815	2505	288	9.20	0	5	0		6.08	2.23	1.118		BACTERIA SAMPLES TAKEN - 1020							
	12/8	0800	2920	315	9.20	1	1	0		6.40	2.50	1.149		BACTERIA SAMPLES TAKEN - 0930							
	12/9	0800	2320	1145	9.55	0	0	0		6.60	2.85	1.179		BACTERIA SAMPLES TAKEN - 0930							
		1200	370	490	9.62							1.192									
	12/10	0900	185	660	8.96							1.206									
		1200	265	490	9.60	0	0	0	11.94	6.90	2.23	~~1.215~~		BACTERIA SAMPLES TAKEN - 1215							
		1600	55	660	-				21.69			1.215		FILL @ 1700 SLUDGE DUMP							
	12/11	0800	1960	330	9.32					5.02	2.30	1.051									
		0900	110	145	8.35																
		1000	120	144	8.25																
		1100	370	160	7.70	0	0	0						BACTERIA SAMPLES TAKEN							
	12/12	1530	4140	99	7.72				9.19	4.93	2.23	1.025									

REMARKS:

① HEAT CYCLE ON 1430

81421

Hamilton Standard DIVISION OF UNITED AIRCRAFT CORPORATION

SVHSER 5903
CR-111932

HSF-175.1A 1/68

Hamilton Standard DIVISION OF UNITED AIRCRAFT CORPORATION
WINDSOR LOCKS, CONNECTICUT 06096

SPACE & LIFE SYSTEMS LABORATORY
LOG OF TEST

TYPE OF TEST: 90 DAY ENDURANCE TEST
TEST ENGINEER:
NAME OF RIG: VDR II
PROJECT & ENG. ORDER NO.:

SHEET 4 OF 10 | DATE
TEST PLAN NO.:
MODEL NO.:
PART NO.:
SERIAL NO.:
OPERATORS: W. KOLNSBERG, D. McCANN

DATE	TIME	V_{PW}	$COND$	pH	BACTERIA SAMPLES PW	UCT	UHT	U ADDED	pH UCT	pH UHT	S.G. UCT										
		ML	μ℧					LBS													
12/13	1530	3680	103	7.54	—	—	—	13.75	4.82	2.19	1.064										
12/14	0800	2810	119	8.02				—	5.35	2.21	1.078										
	1200	645	106	8.18				—	—	—	—										
	1300	200	120	8.32				—	—	—	—										
	1500	340	126	8.37				9.87	[redacted]	—	—										
12/15	0800	2515	167	8.35				—	5.34	2.18	1.090										
	0900	—	—	—	0	0	0	—	—	—	—	BACTERIA SAMPLE									
	1600	605	192	8.50				—	—	—	—										
12/16	0800	2040	157	8.97				13.31	5.74	2.03	1.070										
	1600	1160	156	9.10	0	0	0	—	—	—	—	BACTERIA SAMPLE									
12/17	0830	2215	156	9.20				3.56	6.22	2.12	1.093										
	1600	725	195	9.08				—	—	—	—										
12/18	0800	4675	136	8.43	0	0	0	16.50	4.55	2.11	1.083	BACTERIA SAMPLE					1200				
	1600	2310	127	7.84				—	—	—	—										
12/19	1100	5585	150	8.10				15.94	5.13	2.12	1.090										
12/20	1230	6990	180	8.70				20.37	5.43	2.20	1.12										
12/21	0800	5110	200	8.78	1	0	0	—	5.57	2.15	1.145										
	1600	1980	199	8.82				12.31	—	—	—										
12/22	0800	3840	230	9.02	1	1	3	[redacted]	5.60	2.11	1.15										
12/22	1400	1530	260	8.9				—	5.45	2.1	1.129										
12/23	0930	5645	184	7.80				11.75	4.78	2.08	1.143										

REMARKS:

81419

Hamilton Standard DIVISION OF UNITED AIRCRAFT CORPORATION

SVHSER 5903
CR-111932

HSP-178.1A 1/(

Hamilton Standard DIVISION OF UNITED AIRCRAFT CORPORATION
WINDSOR LOCKS, CONNECTICUT 06096

SPACE & LIFE SYSTEMS LABORATORY
LOG OF TEST

TYPE OF TEST: 90 DAY ENDURANCE
TEST ENGINEER:
NAME OF RIG: VDR II
PROJECT & ENG. ORDER NO.:

SHEET 5 OF 10 | DATE
TEST PLAN NO.
MODEL NO.
PART NO.
SERIAL NO.
OPERATORS: H. ROLNSBERG, D. MCCANN

DATE	TIME	V_{PW}	C_{ND}	pH	BACTERIA SAMPLES PW	V_{CT}	V_{HT}	U ADDED	pH V_{CT}	pH V_{HT}	S.G. V_{CT}	ELAPSED TIME								
		ML	μΩ					#				HRS.								
12/24	1000	7126	233	8.0	0	—	—	22.03	5.13	2.10	1.156	907	PW BACTERIA SAMPLE TAKEN							
12/25	1530	8052	285	8.48	—	—	—	16 %	5.33	2.13	1.155	986.5	ADDED 40 ml. H_2SO_4 TO CYCLE TANK							
12/26	1930	7725	250	7.82	0	—	—	16.15	4.97	2.08	1.168	964.5	PW BACTERIA SAMPLE TAKEN							
12/27	1930	6260	275	8.62	—	—	—	16.84	5.20	2.11	1.192	988.5								
12/28	0800	3170	320	8.90	0	—	—	—	5.30	2.38	1.178	1001	BACTERIA SAMPLE TAKEN 0930							
	1600	1635	310	8.45	—	—	—	—	4.45	—	1.20	1009								
12/29	0800	1470	310	8.07	—	—	—	10.25	5.06	2.10	1.222	1025								
	1030	93	—	—	—	—	—	32.69	—	—	—		SLUDGE DUMP #3							
	1600	1165	235	7.88	—	—	—	—	2.90	1.95	—	1033								
12/30	0800	4160	65	7.10	0	—	—	10.09	2.93	2.03	1.051	1049	BACTERIA SAMPLES TAKEN 1030							
	1600	2010	59	6.78	—	—	—	—	—	—	—									
12/31	0800	3730	61	6.95	0.1	—	—	14.69	3.45	2.08	1.054	1073	BACTERIA SAMPLES TAKEN 1330							
	1600	2185	61	6.83	—	—	—	—	—	—	—	1081								
1/1/71	1430	7635	54	6.97	0	—	—	23.06	4.32	2.12	1.080	1103.5	PW BACTERIA SAMPLE TAKEN							
1/2/71	1400	6020	56	6.92	—	—	—	6.72	4.23	2.20	1.075	1127								
1/3/71	1200	5705	420	7.65	0	—	—	7.81	4.32	2.02	1.081	1149	PW BACTERIA SAMPLE TAKEN							
1/4	0800	4950	270	7.95	—	—	—	—	4.40	2.00	1.096	1169								
	1500	1745	173	7.98	0	—	—	14.19	—	—	—		PW BACTERIA SAMPLE TAKEN 1600							
1/5	0800	4605	170	7.92	0	0	0.2	13.65	4.67	1.98	1.101	1193	BACTERIA SAMPLES TAKEN 0900							
	1600	2080	161	8.00	—	—	—	—	—	—	—									
1/6	0800	4270	170	8.25	0	0	0.0	24.12	4.77	2.05	1.106	1217	BACTERIA SAMPLES TAKEN 0900							

REMARKS:

81423

Hamilton Standard DIVISION OF UNITED AIRCRAFT CORPORATION

SVHSER 5903
CR-111930

HSF-178.1A 1/66

Hamilton Standard DIVISION OF UNITED AIRCRAFT CORPORATION
WINDSOR LOCKS, CONNECTICUT 06096

SPACE & LIFE SYSTEMS LABORATORY

LOG OF TEST

TYPE OF TEST: 90 DAY ENDURANCE
TEST ENGINEER:
NAME OF RIG: VDR II
PROJECT & ENG. ORDER NO.:

SHEET 6 OF 10 | DATE:
TEST PLAN NO.:
MODEL NO.:
PART NO.:
SERIAL NO.:
OPERATORS: H. KOLNSBERG, D. McCANN

DATE	TIME	V_{PW}	$COND$	pH	BACTERIA SAMPLE PW	BACTERIA SAMPLE U_{CT}	BACTERIA SAMPLE U_{HT}	U_{IN} LBS	pH U_{CT}	pH U_{HT}	SG U_{CT}	ELAPSED TIME		
1/6	1600	1800	161	8.18	—	—	—	—	—	—	—	1225		
1/7	0800	4010	150	8.45	—	—	—	15.5	5.22	2.08	1.130	1241		
	0830	—	—	—	2	0	0.0	—	4.95	—	1.104	—	BACTERIA SAMPLES TAKEN	
	1600	2025	169	8.51	—	—	—	—	—	—	—	1249		
1/8	0800	4250	186	8.78	—	—	—	14.28	5.45	2.08	1.133	1265	BACTERIA OUTLET-0; METER-0.	2
	1600	2020	212	8.78	—	—	—	—	—	—	—	1273		
1/9	1400	4120	288	8.80	—	—	—	8.093	5.60	2.12	1.133	1295		1
1/10	1200	4605	230	8.98	—	—	—	10.88	5.65	2.03	1.1345	1317		
1/11	0800	3560	263	9.25	0.6	0	0.0	—	5.77	2.04	1.168	1337	BACTERIA SAMPLES TAKEN 1015	2
	1600	1160	293	9.22	—	—	—	—	5.92	—	1.202	1345		
1/12	0800	1920	289	9.49	—	—	—	34.56	6.10	2.08	1.258	1361	SLUDGE DUMP #4 @ 0820 - 18.25#	
	1200	865	244	9.26	—	—	—	—	—	—	—	1365		
	1600	1180	128	8.25	—	—	—	—	2.98	2.08	1.040	1369		
1/13	0800	4310	89	7.85	0.0	0	0.0	16.81	3.40	2.13	1.048	1385	BACTERIA SAMPLES TAKEN 0830	2
	1500	1770	92	7.72	—	—	—	—	—	—	—	1398		
1/14	0800	4475	89	7.77	0.5	0	0.0	11.81	3.61	2.33	1.067	1409	BACTERIA SAMPLES TAKEN 0915	2
	1600	2055	78	7.52	—	—	—	—	—	—	—	1417		
1/15	0800	4785	70	7.78	0.6	0	0.0	17.53	4.20	2.17	1.071	1433		
	1500	1800	82	7.38	—	—	—	—	—	—	—	1440		
1/16	0900	4670	83	7.58	—	—	—	12.93	4.58	2.17	1.076	1458		
1/17	1000	6520	99	7.84	—	—	—	10.93	5.17	2.07	1.087	1483		
1/18	0800	5680	99	8.30	250	0	0.0	15.75	5.18	2.02	1.090	1505	BACTERIA SAMPLES TAKEN 0820	2

REMARKS:
1. HOT & COLD FLUID PUMPS OFF AT 0700 - 1330
2. BACTERIA SAMPLES (PW) AT LINE OUTLET.

81425

Hamilton Standard DIVISION OF UNITED AIRCRAFT CORPORATION

SVHSER 5903
CR-111932

HSF-175.1A 1/66

Hamilton Standard DIVISION OF UNITED AIRCRAFT CORPORATION
WINDSOR LOCKS, CONNECTICUT 06096

SPACE & LIFE SYSTEMS LABORATORY

LOG OF TEST

TYPE OF TEST: 90 DAY ENDURANCE TEST
TEST ENGINEER:
NAME OF RIG: VDR II
PROJECT & ENG. ORDER NO.:

SHEET 7 OF 10 DATE:
TEST PLAN NO.:
MODEL NO.:
PART NO.:
SERIAL NO.:
OPERATORS: H. KOLNSBERG, D. McCANN

DATE	TIME	V_{PW}	COND	pH	BACTERIA SAMPLE PW	BACTERIA SAMPLE UCT	BACTERIA SAMPLE UHT	UIN LBS	pH UCT	pH UHT	SG UCT	ELAPSED TIME		
1/18	1600	1800	116	8.67	—	—	—	—	—	—	—	1513		
1/19	0800	4275	189	8.89	580	0	0.0	14.81	4.96	2.18	1.088	1529	SAMPLES TAKEN (BACTERIA) 0830	(2)
	1600	1770	215	8.75	—	—	—	—	—	—	—	1537		
1/20	0800	3700	168	8.82	12	0	0.0	8.63	5.63	2.10	1.113	1553	SAMPLES TAKEN (BACTERIA) 1115	(1)
	1600	1480	193	9.00	—	—	—	—	5.78	—	1.133	1561		
1/21	0800	2800	230	8.94	5.2	0	0.0	—	5.98	—	1.152	1577	SAMPLES TAKEN (BACTERIA) 0830	(1)
	1600	1080	205	9.28	—	—	—	—	—	—	1.170	1585		
1/22	0800	1735	165	9.59	2.0	0	0.0	—	6.33	—	1.199	1601	SAMPLES TAKEN (BACTERIA) 0845	(1)
	1600	560	250	9.48	—	—	—	—	6.40	—	1.227	1609		
1/23	0800	985	333	9.67	—	—	—		6.57	—	1.268	1625		
	0845	—	—	—	—	—	—	19.625		—			SLUDGE DUMP #5 - 14.25#	
	1100	530	346	9.60	—	—	—	—	3.25	2.08	1.040	1628		
	1400	822	162	9.12	—	—	—	—	—	—	—	1631		
1/24	1000	2553	89	8.02	—	—	—	7.03	3.36	2.20	1.0515	1651		
	1500	1480	82	7.68	—	—	—	—	—	—	—	1656		
1/25	0800	4830	92	7.42	*0.0	0	0.0	12.50	3.69	2.21	1.074	1673	SAMPLES TAKEN (BACTERIA) 0900	(1) (2)
	1600	2475	121	7.15	—	—	—	—	—	—	—	1681	*60/ml at outlet	
1/26	0800	5560	94	7.72	—	—	—	17.75	3.68	2.14	1.093	1697		
	1600	2760	94	7.28	—	—	—	—	—	—	—	1705		
1/27	0800	5120	88	7.19	2	—	—	18.81	4.08	2.18	1.124	1721	PW SAMPLE TAKEN 0930 AT PORT	
	1600	2410	97	7.25	—	—	—	—	—	—	—	1729		
1/28	0800	5420	117	7.25	8	—	—	15.75	4.58	2.23	1.133	1745	PW SAMPLE AT PORT 0900	

REMARKS: (1) Sampled at module port
(2) Sampled at outlet

84739

Hamilton Standard DIVISION OF UNITED AIRCRAFT CORPORATION

SVHSER 5903
CR-111932

HSF-175.1A 1/66

Hamilton Standard DIVISION OF UNITED AIRCRAFT CORPORATION
WINDSOR LOCKS, CONNECTICUT 06096

SPACE & LIFE SYSTEMS LABORATORY

LOG OF TEST

TYPE OF TEST: 90 DAY ENDURANCE TEST
TEST ENGINEER:
NAME OF RIG: VDR II
PROJECT & ENG. ORDER NO.:

SHEET 8 OF 10 | DATE:
TEST PLAN NO.:
MODEL NO.:
PART NO.:
SERIAL NO.:
OPERATORS: H. KOLNSBERG, D. McCANN

DATE	TIME	V_{pw} ML	COND μΩ	pH	BACTERIA pw	BACTERIA UCT	SAMPLE UHT	U_{IW} LBS	pH UCT	pH UHT	S.G. UCT	ELAPSED TIME	
1/28	1600	2290	150	7.49	—	—	—	—	—	—	1.136	1753	S.G. @ 1500
1/29	0800	4260	195	8.58	—	—	—	5.93	5.39	2.21	1.277	1769	
	0830	—	—	—	80/~~3500~~	0	0.1	16.75	—	—	1.280	—	REFILL AFTER DUMP - S.G OF DUMP
	1600	2840	137	8.35	—	—	—	—	—	—	—	1777	BACTERIA SAMPLES TAKEN 0900
1/30	1900	9310	70	6.92	—	—	—	23.69	4.19	2.21	1.102	1804	
1/31	1200	5110	72	7.08	—	—	—	12.12	4.53	2.19	1.117	1821	
2/1	0800	5600	109	7.50	0/5	0	0.0	—	4.72	2.12	1.127	1841	BACTERIA SAMPLES TAKEN 0900
	1300	1385	124	7.58	—	—	—	—	—	—	—	1846	
	1600	100	157	5.97	—	—	—	—	—	—	—	1849	
2/2	0800	4180	132	8.46	0.1/560	0	0.1	25.31	4.97	2.08	1.142	1865	BACTERIA SAMPLES TAKEN 0830
	1100	595	140	8.43	—	—	—	—	—	—	—	1868	
	1600	495	176	8.44	—	—	—	—	—	—	1.142	1873	CT LEVEL = 4.8"
2/3	0800	2965	127	8.85	0.1/100	0	0.3	5.19	5.38	2.02	1.200	1889	CT LEVEL = 2.8"
	1600	790	176	9.08	—	—	—	23.56	5.53	—	1.261	1897	SLUDGE DUMP = 8.78#
2/4	0800	4520	90	8.60	0.0	0	0.1	—	3.22	2.03	1.070	1913	BACTERIA SAMPLES TAKEN 1000
	1600	1925	83	7.30	—	—	—	—	—	—	—	1921	
2/5	0800	3910	94	7.82	1.1	0	0.0	14.84	3.89	2.08	1.087	1937	BACTERIA SAMPLES TAKEN 0900
	1300	1070	92	7.72	—	—	—	—	—	—	—	1942	
	1600	550	84	7.88	—	—	—	—	—	—	—	1945	
2/6	1000	3345	82	8.05	—	—	—	11.37	4.12	2.07	1.076	1963	
	2000	2300	88	8.00	—	—	—	—	—	—	—	1973	
2/7	1300	3465	100	8.10	—	—	—	10.94	4.56	2.02	1.095	1990	

REMARKS:

84741

Hamilton Standard DIVISION OF UNITED AIRCRAFT CORPORATION

SVHSER 5903
CR-111932

HSF-175.1A 1/66

Hamilton Standard DIVISION OF UNITED AIRCRAFT CORPORATION
WINDSOR LOCKS, CONNECTICUT 06096

SPACE & LIFE SYSTEMS LABORATORY

LOG OF TEST

TYPE OF TEST: 90 DAY ENDURANCE TEST
TEST ENGINEER:
NAME OF RIG: VDR II
PROJECT & ENG. ORDER NO.:

SHEET 9 OF 10 DATE:
TEST PLAN NO.:
MODEL NO.:
PART NO.:
SERIAL NO.:
OPERATORS: H. KOLNSBERG, D. McCANN

DATE	TIME	V_{PW} ml	COND. μΩ	pH	BACTERIA SAMPLE PW	BACTERIA SAMPLE V_{CT}	BACTERIA SAMPLE V_{HT}	V_{IN} #	pH V_{CT}	pH V_{HT}	S.G. V_{CT}	ELAPSED TIME		
2/8	0800	3240	113	8.12	1.0/0.0	1	0.0	—	5.24	2.00	1.163	2009	BACTERIA SAMPLES TAKEN 0900	(1)
	1200	740	130	8.02	—	—	—	—	—	—	—	2013		
	1600	810	137	8.07	—	—	—	11.61	—	—	—	2017		
2/9	0800	2750	144	7.93	0.0/45	0	0.1	3.03	5.21	2.01	1.129	2033	BACTERIA SAMPLES TAKEN 0830	(1)
	1600	1280	158	8.08	—	—	—	—	5.43	—	1.158	2041		
2/10	0800	2000	169	8.55	0.0/39	—	—	—	5.65	2.02	1.206	2057	BACTERIA SAMPLES TAKE 0900	(1)
	1530	—	—	—	—	—	—		5.77	—	1.240		SLUDGE DUMP #8 - 6.75#	
	1600	745	215	9.07	—	—	—	16.06	3.45	1.97	—	2065		
2/11	0800	3420	117	7.70	—	—	—	9.88	4.18	2.01	1.094	2081		
	1600	1780	97	8.06	—	—	—	—	—	—	—	2089		
2/12	0800	3315	109	7.78	0.0/3.2	0	0.0	6.90	4.60	2.04	1.085	2105	BACTERIA SAMPLES TAKEN 0900	(1)
	1200	844	126	7.90	—	2×10^6	—	—	—	—	—	2109	BACTERIA CHALLENGE START 1000	
	1400	352	127	8.12	0.0	1	—	—	—	—	—	2111	BACTERIA CHALLENGE 4 HOUR	
	1600	4 1/4	118	8.08	—	—	—	—	—	—	—	2113		
2/13	1000	—	—	—	0.0	0	—	—	—	—	—	—	BACTERIA CHALLENGE 24 HOUR	
	1200	3357	68	8.60	—	—	—	14.0	5.34	2.10	1.092	2133		
2/14	1000	—	—	—	0.0	10	—	—	—	—	—	—	BACTERIA CHALLENGE 48 HOUR	
	1200	3915	116	8.50	—	—	—	—	—	2.08	1.109	2157		
	1800	860	115	8.57	—	—	—	—	—	—	—	—		
2/15	0800	2290	117	8.55	0.0/0.0	0	0.0	—	5.40	2.08	1.107	2177	BACTERIA SAMPLES TAKEN 0830	
	1300	900			—	—	—	—	—	—	—		BACTERIA MEMBRANE CHALLENGE (1100)	
	1600	550	135	8.62	0.0	—	—	—	—	—	—	2185	BACTERIA CHALLENGE 4 HOUR (1500)	

REMARKS:
(1) Sampled at module and tank after charcoal

84743

Hamilton Standard DIVISION OF UNITED AIRCRAFT CORPORATION

SVHSER 5903
CR-111932

HSP-175.1A 1/66

Hamilton Standard DIVISION OF UNITED AIRCRAFT CORPORATION
WINDSOR LOCKS, CONNECTICUT 06096

SPACE & LIFE SYSTEMS LABORATORY

LOG OF TEST

TYPE OF TEST: 90 DAY ENDURANCE TEST
TEST ENGINEER:
NAME OF RIG: VDR II
PROJECT & ENG. ORDER NO.:

SHEET 10 OF 10 DATE: 2-16-71
TEST PLAN NO.:
MODEL NO.:
PART NO.:
SERIAL NO.:
OPERATORS: H. KOLNSBERG, D. McCANN

DATE	TIME	VPW ml	COND μΩ	pH	BACTERIA/ml PW	BACTERIA/ml UCT	BACTERIA/ml UHT	UIO HDS	pH UCT	pH UHT	S.G UCT	ELAPSED TIME		
2/16	0800	2710	163	8.46	0.0	–	—	19.5	5.68	2.10	1.140	2201		BACT. MEMBRANE CHALLENGE 24 Hour
	1600	1045	175	8.60	—	—	—	—	—	—	—	2209		
2/17	0800	2520	185	8.48	0.0	0	2.5	6.81	5.59	2.08	1.133	2225		BACT. MEMBRANE CHALLENGE 48 Hour
	1600	1040	201	8.78	—	—	—	—	—	—	—	2233		
2/18	0840	2370	201	8.97	—	—	—	8.50	5.73	2.09	1.145	2249+16		90 DAYS ELAPSED TIME - VPW TO 0900
	1400	690	200	—	—	—	—	—	—	—	—	2255		
2/19	0800	2285	240	9.02	—	—	—	5.50	5.81	2.03	1.144	2273		
	0930	+167 180	—	—	—	—	—	—	—	—	—	—		
	1530	585	195	9.03	—	—	—	—	—	—	—	2279		

REMARKS:

84745

Hamilton Standard DIVISION OF UNITED AIRCRAFT CORPORATION

SYHSER 5903
CR-111932

APPENDIX C

90 Day Test Log

APPENDIX C

Test Log

The following is a faithful copy of the daily entries made by test engineering personnel in the test log. Total system maintenance times have been calculated for each day and tabulated for easy reference.

Day #	Date	Log Entries	System Maintenance Time, Minutes
-4	11/16/70	Reconnected urine pumps to three pumps in series with manual bypass valves around each pump. Hydrogen peroxide back flush (~72 hours) completed. Installed two membrane modules and started test at 1500.	
-3	11/17/70		
-2	11/18/70	Permeation rate high on one of two modules in soak tank. Pinhole leak disclosed by water pressure test at ~12" H_2O. Replaced with new membrane, resoaked. Installed other membrane module as third module in system @ 1500.	
-1	11/19/70	Permeation rate still high on last module in soak tank (same module as pinhole leak of 11/18). Pressure test revealed pinhole in second membrane. Replaced and started resoak @ 1000. Permeation rate @ 1300 was 10 ml/30 sec. - considered too high to install this date (rates on previous modules 5 ml/30 sec. max.)	
1	11/20/70	Installed fourth module @ 0840. Permeation rate <5 ml/30 sec. Start 90 day test record. Recorder readings erratic due to chatter @ ~1530. Corrected by resetting recorder damping @ ~1550.	
2	11/21/70		
3	11/22/70		
4	11/23/70	Excessive chatter observed on temperature recorder between 130 & 150 degree points ($T_{U\ OUT}$ & $T_{U\ HT}$). Divert valve signal de-energized at 1700.	
5	11/24/70	All thermocouples, connectors and leads checked out and found OK, indicating recorder trouble in recorder circuitry.	

Day #	Date	Log Entries	System Maintenance Time, Minutes
6	11/25/70	0800 Wiped level sensor probes-tank fill came on. Turned tank fill off until dump.	10
		1005 Reset solids meter set point to activate dump. Dump (19.12 #) completed in 5 minutes. S.G. dump liquor = 1.095 Maintenance time 10 min.	
		1400 Replaced Honeywell recorder with Bristol recorder connected thru timer for 2 minute operation every 30 minutes.	
		1720 Sterilization heat cycle timer tripped manually.	
		1935 Heat cycle completed. Gap pressure low, N_2 flow up to 1000 ml/min. Urine flow down from 60 to 50.	
		2010 Gap pressure 4" AB_{r_4}, N_2 flow 350 ml/min. Product water line dry - first water flow indicating leak at bacteria sampling port. Tightened port cap.	
		2020 Gap pressure 4" AB_{r_4}, N_2 flow 250 ml/min. Product water line full.	
7	11/26/70	1030 P_{MO} recorder pen clogged. Pressure flush unsuccessful.	
		1945 Refilled P_{MI} recorder pen. P_{MO} pen still clogged.	
8	11/27/70	1130 Added 12L hot water to HW bath. P_{MO} pen still clogged.	
9	11/28/70	1030 Added 13L hot water to HW bath. Repaired pen on spare channel and reconnected P_{MO} transducer to same. P_{MO} on 1050.	
10	11/29/70	1230 Added 10L hot water to HW bath. Last of urine supply used to refill holding tank.	
11	11/30/70	1400 Heat cycle triggered manually. Maintenance time 2 min.	2
		1545 Heat cycle ended. Nitrogen bubbling from P W line. Gap pressure = 2.8" AB_{r_4}, N_2 flow = 1350 ml/min.	

Day #	Date	Log Entries	System Maintenance Time, Minutes
12	12/1/70	"Blips" on P_{MI} & P_{MO} traces observed to correspond to switching off of HW bath. No blips with switch on. 0830 Urine feed extremely slow - replaced urine filter. Flow normal. ~125 ml lost from holding tank. Maintenance time 5 min. 1430 Heat cycle activated manually. PW line closed manually. Maintenance time 2 min. 1630 Heat cycle completed. N_2 flow = 1575 ml/min. on opening PW line. Urine S.G. = 1.105, K (Meter) = 55.0 115 ml sample lost 0945 Installed repaired Honeywell recorder.	7
13	12/2/70	1415 Heat cycle timer tripped 1415, activating newly installed heating tape on PW manifold and PW line shutoff solenoid valve. Urine filter again restricting feed flow. Filter removed. ~125 ml lost from holding tank. Maintenance time 5 min.	5
14	12/3/70	0800 S.G. Urine = 1.086, K Meter = 54.5. ~110 ml sample lost 1500 200 ml sample for pH determination lost from holding tank Added 20 ml H_2SO_4 to holding tank to lower urine pH from 3.71 to 1.98 Maintenance time 3 min.	3
15	12/4/70	0800 Found heating tape on PW manifold on - variac control switch evidently failed in on position. Replaced variac, connected to heat cycle timer. 1330 Found dump #2 switch off. Switch evidently turned off inadvertently at 1100 reading. 100 ml cycle tank S.G. sample lost.	
16	12/5/70		

Day #	Date		Log Entries	System Maintenance Time, Minutes
17	12/6/70	1200	Excessive chatter on temperature recorder between 125 & 160 ° signals. Cleaned sliding contacts - chatter disappeared.	
18	12/7/70	0815	Found ~2/3 of coolant water dumped into hot water bath, evidently by solenoid valve malfunction after 12/6 heat cycle.	
19	12/8/70			
20	12/9/70	0800	Recorder temperature points 6 & 7 (cold water inlet & outlet) erratic most of night. Cleaned contacts - points OK. Urine cycle tank level = 5.5", S.G. = 1.179	3
		1345	Urine cycle tank level = 5.15", S.G. = 1.192	
		1500	Temperatures irregular at end of heat cycle. Found HW bath level up, CW bath level down, cross flow (cold into hot) at heat cycle diverter solenoid valve at HW flow rater outlet, probably due to foreign matter stuck in valve. Clamped CW hose to valve to stop cross flow - will follow up after next heat cycle. Hot water flow increased from 12 to 16 after clamping. Found blown fuse in cold water divert circuit on panel. Replaced fuse. Maintenance time 3 min.	
21	12/10/70	0800	Found urine flow stopped, modules and downstream lines charged with nitrogen. Both pumps still running. Recorder charts of temperature & pressure indicate beginning of malfunction ~1640 on 12/9. N_2 flow > 1500 ml/min. Refilled lines & modules by starting third pump, installing bypass across modules, disconnecting all modules and reconnecting modules one at a time. Urine flow at 33 (~72 lbs/hr) at 0900. N_2 flow ~1000 ml/min. Maintenance time 35 min. 185 ml processed since 1200 12/9, hence no sample available for chemical analysis.	45

Day #	Date	Log Entries	System Maintenance Time, Minutes
21 (Continued)	12/10/70	0930 Urine cycle tank level = 4.8", S.G. = 1.206 1430 Urine cycle tank level = 4.5", S.G. = 1.215 1700 Dump cycle started manually. Dump wt. = 12.78#, S.G. = 1.216. Maintenance time 10 min.	
22	12/11/70	0800 Urine cycle tank S.G. = 1.051 1100 Replaced hot water pump with higher capacity pump - HW flow increased from ~17 to ~32 1200 Replaced heat cycle diverted solenoid valve. (Ref. 12/9/70 @ 1500). Found foreign matter in valve removed which kept valve from reseating properly and permitted cross flow. 1400 Replaced coolant loop Tygon tubing with polyflo tubing - Tygon bulging due to increased pressure in hot water loop. 1545 Added 12.0 ml (~0.8 ml/L) H_2SO_4 to urine in cycle tank to reduce pH. Maintenance time 3 min.	3
23	12/12/70		
24	12/13/70		
25	12/14/70		
26	12/15/70	0800 No overnight urine feed. Found level sensor covered with urine foam. Wiped off foam, discontinuing circuit between sensor probes, to trigger feed. Maintenance time 3 min. ~60 ml urine concentrate lost due to spillage during S.G. determination. 1300 Failure in heat cycle timer tripped circuit breaker 1230, shutting off heat cycle and system power. Removed timer from circuit, re-primed urine lines and manually connected heat cycle. Gas permeation thru membranes seems markedly reduced. 1530 Installed shield tube over level sensor to prevent shorting of sensors by foam build-up. Maintenance time 3 min.	6
27	12/16/70	0800 Urine feed working satisfactorily - no foam on level sensors, level at maximum. Urine flow to module 1 low - appears to be almost entirely nitrogen and foam.	

Day #	Date	Log Entries	System Maintenance Time, Minutes
28	12/17/70	1000 Module #3 (from right) showing little or no urine flow - mostly foam. Replaced Mod #3 with new module. Urine flow increased to 52 from ~47. Maintenance time 2 min. 1600 Module #1 replaced with new module - F_U from 35 to 54 Maintnenace time 2 min. 1620 Added 34 ml H_2SO_4 to cycle tank to lower urine pH. Maintenance time 2 min.	6
29	12/18/70	0800 Drained, cleaned & refilled hot water bath. 1200 New module (3) put to soak. 1430 New module (x) put to soak.	
30	12/19/70	1210 Temperature recorder erratic (chatter). Removed and filed contacts, cleaned with alcohol. Operation OK on reassembly.	
31	12/20/70	1345 Observed suspension of black particles in hot water loop. Cause undetermined. No action taken.	
32	12/21/70		
33	12/22/70	0800 P_{MO} recorder out of ink - about 12 hrs. lost. Refilled and started 0820. Level control did not feed overnight - level ~6L low. Cleaned control which triggered fill ~0845. Maintenance time 3 min. 1500 Added 42.5 ml H_2SO_4 to urine in cycle tank. Turned on 3rd urine pump. Maintenance time 2 min.	5
34	12/23/70	1030 P_{MO} recorder pen out of ink - about 14 hrs. data lost. Filled, cleaned & restored to operation ~1100.	
35	12/24/70	1200 P_{MO} recorder pen plugged - cleaned & restored to operation 1205. About 4 hrs. data lost.	

Day #	Date	Log Entries	System Maintenance Time, Minutes
36	12/25/70	1500 P_{MO} & P_{MI} recorders out of paper ~0200 - about 13 hrs. data lost. Added 40 ml H_2SO_4 to urine in cycle tank. Maintenance time 2 min.	2
37	12/26/70	1930 P_{MO} chart jammed ~1740 12/25 ~ 24 hrs. data lost. Cleaned & restored to service.	
38	12/27/70	1930 P_{MO} recorder chart jammed ~2100 12/26 - about 22.5 hrs. data lost. Reset, refilled & cleaned pen. Restored to service 2030.	
39	12/28/70	0800 P_{MO} recorder lost contact with chart ~2100 12/27 - ~11 hrs. data lost. Reset pen, restored to operation 0800. Started concentration cycle (feed control off) 0930 Added 52 ml H_2SO_4 to urine in cycle tank. CT level = 10.1 inches. Maintenance time 2 min. 1530 Hot water pump failed. New pump installed ~1550. 1600 CT level = 9.2 inches 0800 Turned off 3rd urine pump.	2
40	12/29/70	0800 CT level = 8.1 inches, S.G. = 1.222. Turned off 3rd urine pump. 1120 Solids dump activated - 31.06 lbs. dumped. S.G. = 1.228. Maintenance time 10 min. 1250 Turned off 3rd urine pump. 1630 Turned on 3rd urine pump F_U = 47.5. Module #3 shows high nitrogen flow since dump.	10
41	12/30/70	0800 Found P_{MI} recorder out of ink - ~11 hrs. data lost. Found P_{MO} recorder off drive sprocket - ~3 hrs. data lost. Both recorders restored to service 0800. 1120 3rd urine pump turned off. Module #3 nitrogen flow lessened slightly.	

Day #	Date	Log Entries	System Maintenance Time, Minutes
42	12/31/70	0900 PW rate 0800 -0900 = 220 ml Disconnected #3 module. Maintenance time 2 min. 1000 PW rate 0900-1000 = 220 ml 1030 Removed #3 module to check reason for high permeation - no obvious leaks in membranes. Installed bypass across module #3 urine lines - flow very slow. Replaced bottom quick connect - flow increased. Replaced #3 module - permeation down considerably. Maintenance time 15 min. 1200 Rate 1100-1200 = 310 ml 1300-1330 Replaced bottom disconnects on remaining 3 modules. Δ P across modules decreased by about 1 psi. Maintenance time 10 min. 1600 PW rate = 318 ml (1500-1600)	27
43	1/1/71	1525 Hot water pump stopped, tripping circuit breaker. Behaved like locked-rotor motor. Replaced pump with smaller pump. Flow with smaller pump $<$ 8 on scale. Disassembled stopped pump - found rubber impeller broken & piece jammed in pump outlet. Replaced impeller & reinstalled pump at 1620. F_{HW} = 14. Product water bacteria sample taken with field monitor.	
44	1/2/71	1400 Removed, filed & replaced temp. recorder contacts. P_{MO} recorder paper jammed.	
45	1/3/71	1200 P_{MO} recorder erratic since last reading. Reset. Found N_2 pressure = 0. No N_2 pressure at supply lines, standby bottle empty. PW conductivity trace indicates supply lost $\sim$1800 on 1/2. Connected 15 psi lab air supply to N_2 inlet regulator. Pressure normal @ 1220. Level indicator line on modules shows some water build up in gap, all below membrane level. PW conductivity indicating $\sim$500 μ mhos, down to $\sim$400 μ mhos @ 1320. Product water sample taken with field monitor.	

Day #	Date	Log Entries	System Maintenance Time, Minutes
46	1/4/71	1200 Removed & cleaned heat cycle divert valve in HW line. HW flow increased from ~14 to ~18. 1600 PW bacteria sample taken with field monitor.	
47	1/5/71		
48	1/6/71	0800 P_{MO} recorder skipped about 4 hours (0400-0800) Replaced chart paper, realigned.	
49	1/7/71	0800 P_{MO} recorder skipped (off drive) about 16 hours. Realigned chart - on line 0800. 1000 Installed new impeller in HW pump - F_{HW} up from 17 to 33.	
50	1/8/71	0800 P_{MO} recorder skipped off drive - about 3 hrs. record lost. Reset - on line 0800.	
51	1/9/71	1130 Hot and cold circulating pumps off since ~0700. Circuit breaker off. Restarted cold pump. Hot pump impeller failed. 1330 Hot circ. pump back on line. Added 30L to hot water bath. Fill ink reservoir on P_{MI} recorder.	
52	1/10/71	1200 S.G. = 1.1345 at 9.2" cycle tank level. Turn level controller off. 1520 Hot circ. pump a little noisy. Replaced front plate. Much quieter.	
53	1/11/71	0800 Urine cycle tank level = 6.9", S.G. = 1.168 1600 Urine cycle tank level = 6.0", S.G. = 1.202 1620 Turned on 3rd urine pump.	
54	1/12/71	0800 Urine cycle tank level = 4.6", S.G. = 1.258 0820 Sludge dump activated. 18.25 lbs. dumped. Maintenance time 10 min. 1310 Shut off pump #3	10

Day #	Date	Log Entries	System Maintenance Time, Minutes
55	1/13/71	0800 P_{MO} recorder out of ink. ~15 hrs. data lost. Urine feed control off. 1215 Turned on 3rd urine pump. 1400 Removed, cleaned & replaced module disconnects - inlets (singly) & outlets (singly). Cleaning inlets raised F_U from 45 to 52 (3 pumps). Cleaning outlets had no further effect. Particulate matter observed in 3 inlet fittings only. Maintenance time 20 min. 1410 Turned off 3rd urine pump - F_U = 35.	20
56	1/14/71	1530 Observed high nitrogen permeability and little urine flow at outlet of module #2. Replaced quick disconnects - no change. Turned on 3rd urine pump - slight increase in urine flow to module #2. Maintenance time 5 min.	5
57	1/15/71	0800 Urine flow to module #2 much improved. Turned off 3rd urine pump.	
58	1/16/71	0900 P_{MI} recorder out of ink. ~6 hrs. data lost. Outlet urine connection to module #2 shows no urine flow. 0930 Turned on 3rd urine pump and attempted to reprime module #2 - module would not fill. Turned off 3rd urine pump and replaced module #2 - online 0940. F_U increased from 28 to 39. Examination of removed membranes shows pin-point leak in one side (revealed by seepage of liquid during examination). Maintenance time 15 min.	15
59	1/17/71	1030 Module #2, installed 1/16, extremely gassy. Checked all connections, inspected module - found no leaks evident. Reprimed outside package & reinstalled. 1050 Module #2 flow almost zero - replaced with new module. Urine flow increased from 25 to 39. Returned removed module to soak tank. Maintenance time 25 min.	25

Day #	Date	Log Entries	System Maintenance Time, Minutes
60	1/18/71	0800 Module #2 flow low, permeation high. 0840 Turned on 3rd urine pump. F_U increased from ~30 to ~39. 1640 Rate marginal. Disconnected and manually drained module #2. F_U increased from 35 to 64. Maintenance time 5 min.	5
61	1/19/71	0800 F_U = 65 (3 modules). Rate increased to > spec. level. New membrane module permeability test procedure (using vacuum pump and plenum chamber) showed module originally installed 1/16 and removed and returned to soak tank 1/17 to be sufficiently tight (permeation at ~7 ft. H_2O vacuum less than 5 ml in 30 seconds) for installation in system. 1415 Replaced module #2 with tight module. Turned off 3rd urine pump. F_U = 39. Maintenance time 3 min.	3
62	1/20/71	0800 F_U = 35, Module #2 gassy, rate low. Level CT = 9.45". 0810 Turned on 3rd urine pump. F_U increased to 50. 0825 F_U = 25. Module #2 urine flow essentially zero. Removed module #2 for inspection and installed plug. Turned off 3rd urine pump - F_U = 40. Maintenance time 3 min. Surface of module #2 dry and almost solid green color over about 50% of one side. Small portions of remaining area wet with urine. Filled module with water and ran permeation test. Permeation rate = 44 ml in 15 seconds at ~7 ft H_2O vacuum. 1600 Level CT = 8.4" 1630 Installed new module #2. F_U = 39. Maintenance time 2 min.	5
63	1/21/71	0800 Level CT = 6.7" 1200 3rd urine pump turned on. 1600 Level CT = 5.9"	
64	1/22/71	0800 Level CT = 4.7" Module #2 gas permeation spilling over at inlet connection to adjacent modules. Urine flow zero in module #2. Disconnected module and leak checked. Found outlet quick	75

Day #	Date		Log Entries	System Maintenance Time, Minutes
64 (Continued)	1/22/71		disconnect leaking. Replaced disconnect, reprimed and reinstalled module. Prime lost due to excessive gas permeation in about 1 minute. Module extremely dry. Removed module and installed plug. Module installed in soak tank @ ~3' H_2O vacuum ~0945. Maintenance time 70 min.	
		1240	Found product water line dry, no flow. In excess of 200 ml product water in drip pan under modules. Found leak around plug replacing module #2. Replaced plug with dummy module. No leak apparent. Maintenance time 5 min.	
		1410	Product water flow reached collection vessel.	
		1600	Level CT = 4.2"	
65	1/23/71	0845	Level CT = 3.6", S.G. = 1.268. Solids dump #5 completed. 14.25# dumped. Maintenance time 10 min. CT level controls reset at tank depth of ~4.8". Initial fill over-shot level control due to faulty alignment. Corrected fault. Maintenance time 10 min.	20
		1100	Level CT = 5.1"	
66	1/24/71	0935	Found hot water circulating pump off since 2150 1/23. Replaced HW pump with CW pump and installed spare pump in CW loop. On line 0950.	
67	1/25/71	0900	Permeation check of module installed in soak tank on 1/22 indicated membranes well primed and tight. Installed module in place of dummy module #2. Urine flow would not start. Observed particulate water in urine outlet time from module. Removed and cleaned quick disconnect on line and flushed line free of matter with clamp installed before inlet to header. Replaced line - still no urine flow. Removed line completely and found reducing fitting to urine header packed solid with urine salt. Cleaned line, installed new fitting and reconnected to module. Urine flow good, nitrogen permeation appears normal for new module. Maintenance time 45 min.	45

Day #	Date	Log Entries	System Maintenance Time, Minutes
67 (Continued)	1/25/71	1100 Manual product water line valve found closed. Module assy. ~1/3 full of water.	
68	1/26/71		
69	1/27/71	0800 Found temperature recorder not functioning. Off since ~1800 1/26. Started by turning switches on & off. Checking fuses. On line 0830.	
70	1/28/71	1030 PW manual valve found closed. Module ~1/2 full of water. 1600 Concentration cycle started. Level CT = 4.9"	
71	1/29/71	0800 Level CT = 2.07" 0830 Sludge dump completed. 7.81 lbs. dumped. S.G. sludge = 1.280 (60%). Maintenance time 10 min.	10
72	1/30/71	1900 Temperature recorder off about 1600. Restarted.	
73	1/31/71	1200 Temperature recorder off ~2000 1/30. Restarted. 1230 Urine flow to module #4 very low. Installed bypass to check flow - bypass flow OK. Removed module for inspection - no leaks evident. Reinstalled and reprimed module - flow OK. Maintenance time 20 min.	20
74	2/1/71	0800 Temperature recorder off ~1700 1/31. Restarted. Flow to module #4 OK.	
75	2/2/71	1600 Concentration cycle started. CT level = 4.8"	
76	2/3/71	0800 CT level = 2.8" 1600 Sludge dump #7 - 8.78# dumped. Cycle tank overfilled (23.56/~17 lbs) after dump. Maintenance time 10 min.	10

Day #	Date		Log Entries	System Maintenance Time, Minutes
77	2/4/71	0800	Found temperature recorder off. 17 hours data lost. Restarted recorder. Modules #2 & 3 passing little urine. Installed bypass across module #3 to flush fittings. Module #3 about normal after flush. Bypass flush on module #2 ineffective - prime on urine pumps lost due to excessive gas flow from mod. #2. Removed mod #2 for inspection - membranes intact - no leak or weeping of urine. Filled module with water and tested as in pre-installation permeation test (~1 psi suction) - found leakage around edges of membrane under gasket. Flange across ~1/4 turn looser than at installation of membranes, probably due to shrinkage of PVC material in this new module body. Tightened screws to eliminate leaks and reinstalled module - on line 1530. Maintenance time 100 min.	100
78	2/5/71	0800	Found temperature recorder off. About 13 hours data lost. Replaced recorder drive motor. On line ~1010.	15
		1130	Recorder off. Shut down for repair.	
		1300	Installed charcoal canister and new product water (tygon) line. Canister baked and line flushed with 3% hydrogen peroxide prior to installation. Old product water line (with valves) filled with 3% H_2O_2 solution. Maintenance time 15 min.	
		0900	Installed gas separating/sampling bottle on urine return line in cycle tank.	
		1530	Found fitting on separation/sampling bottle broken, permitting a short circuit of urine from return to supply line. Urine temp at module inlet 141°F. Removed bottle connecting lines - urine temp at module inlet 146°F.	
79	2/6/71	1000	Temp recorder back on line. Worn gear box on drive motor re-aligned. 22.5 hours temp data lost.	3
		1100	Added 30L to hot water bath.	

Day #	Date	Log Entries	System Maintenance Time, Minutes
79 (Continued)	2/6/71	1130 #3 module urine flow low - mostly gas: connected bypass momentarily & returned flow to module. Urine flow much improved. Larger ΔT noted on coolant temp ($\sim$2°F). Maintenance time 3 min. 2000 Packing gland on hot water pump leaking. Tightened two turns. Urine fill control operating erractic. Filled cycle tank manually.	
80	2/7/71		
81	2/8/71	Cold water outlet port on condenser module #2 warm to touch. Removed fittings on port - cold water flow almost zero. Back pressured cold water passage to clean blockage with syringe. Pumped out $\sim$200 ml of cloudy cooling fluid before clear fluid ran. Reassembled and returned to service 1145. CW flow increased from 24 to 24.5, ΔP from 8 to 10°F. Maintenance time 20 min.	20
82	2/9/71	0800 Urine flow to module #3 near zero. Installed bypass to flush fittings. Removed, cleaned and replaced module quick disconnect. Flow much improved. Maintenance time 20 min. Started concentration cycle. CT level = 4.4" 1600 CT level = 3.3"	20
83	2/10/71	0800 CT level = 2.3" 1530 CT level = 1.8". Sludge dump #8 - 6.75# dumped. Maintenance time 10 min.	10
84	2/11/71	1400 Installed new gas sampling device in the cycle tank. No apparent effect on system temperatures.	
85	2/12/71	0800 #3 module flowing most gas. Connected bypass across module. Returned to module flow with urine flow good. Automatic urine feed control not functioning properly. Manually actuated. Refilled ink reservoir on P_{MI} recorder. Lost $\sim$10 hrs. data. Maintenance time 10 min.	20

Day #	Date		Log Entries	System Maintenance Time, Minutes
85 (Continued)	2/12/71	1000	Two (2) types of bacteria introduced into the urine circulating loop, alcaligenes faecalis and pseudomonas aeruginosa. Total bacteria added will give a concentration of approx. 2,000,000/ml in the circulation loop. After 4 hours of circulation, a sample was taken from the cycle tank and a sample was taken of prop. water. Standard membrane counts were conducted on these samples.	
		1100	Removed charcoal filter from prop. water line for autoclaving. Maintenance time 5 min.	
		1200	Removed module #3 and replaced with dummy to evaluate process rate. Removed module was drained & stored in tap water during interim.	
		1400	Replaced #3 and removed #2	
		1605	Replaced charcoal filter in product water line. Maintenance time 5 min.	
86	2/13/71	1310	Removed #2 dummy module and replaced with original #2. Disconnected #1 and drained urine in place. Prod. water rate with #2 module removed = .37#/hr.	
		1330	Added ~8 gal. to hot water bath.	
87	2/14/71	1145	Replaced HW pump	
		1220	Reconnected module #1. Disconnected module #4 and drained in place.	
		1515	Replaced HW pump impeller HW flow at 21	
		1800	Emptied prod. water jar to permit rate evaluation from this time. (~860 ml removed)	
88	2/15/71	1100	Membranes on mod #3 swabbed for bacteria challenge.	
89	2/16/71	1300	Module #1 removed and flushed with ~5 gal. of warm (~90°F) water. Dummy module installed during flush.	
		1400	Module #1 reinstalled and reconnected.	
90	2/17/71	1400	Removed prod. water header & delivery line including conductivity sensor and charcoal canister. Installed individual collection lines & bottles on prod. water ports.	

APPENDIX D

Calculations and Analytical Relationships

Recovery Efficiency Calculations

Calculations of the recovery efficiency for each cycle were based on the measured amount of water processed during the cycle and the amount of available water dumped with the urine solids at the end of the cycle. The amount of available water dumped was calculated from the measured weight of the concentrate dumped and its solids concentration as determined by a specific gravity reading of the dump. The calculation for a typical cycle is shown below.

$$E = \frac{PW}{PW + WD}$$

where E = recovery efficiency

PW = weight of water processed

WD = weight of water dumped

$$WD = CD \times (1 - SF)$$

where CD = weight of concentrate dumped

SF = solids fraction = $\frac{\text{specific gravity} - .99325}{.4775}$ (Ref. 1)

for cycle number 4 (days 40 - 54):

PW = 174.08 pounds (79.1 kilograms)

CD = 18.25 pounds (8.3 kilograms)

Specific gravity = 1.258

$$SF = \frac{1.258 - .99325}{.4775} = .554$$

$$WD = 18.25\ (1 - .554) = 8.14\ (8.3\ (1 - .554) = 3.7)$$

$$E = \frac{174.08}{174.08 + 8.14} = .955 \qquad \left(\frac{79.1}{79.1 + 3.7} = .955\right)$$

The overall recovery efficiency for the 90 day test was calculated from summations of PW and WD for the nine cycles of the test:

PW (total) = 1038.36 pounds (471 kilograms)

WD (total) = 67.42 pounds (30.6 kilograms)

$$E\ (\text{total}) = \frac{1038.36}{1038.36 + 67.42} = .939 \qquad \left(\frac{471}{471 + 30.6} = .939\right)$$

An alternate method of determining the amount of water available assumes that the urine input has a solids content of exactly 4%. The available water is then .96 x urine input, or 1107.42 pounds (503 kilograms) for a urine input of 1153 pounds (525 kilograms). The recovery efficiency is then

$$\frac{1038.36}{1107.42} = .938 \quad \left(\frac{471}{503} = .938\right)$$

Process Heat Balance Calculation

Calculations using the average temperatures and flow rates from the data of day 72, show the system heat balance to be as follows:

The total heat input of 2700 B/hr. (79.0 watts) provided to the cycle tank by the heating fluid, is divided into 1080 B/hr (31.6 watts) to maintain the tank temperature and 1620 B/hr (47.4 watts) to the circulating urine. Of this 1620 B/hr (47.4 watts), 220 B/hr (6.4 watts) are lost to the atmosphere from lines and fittings and 1400 B/hr (41.0 watts) are given up in the evaporator. 770 B/hr (22.5 watts) of these 1400 B/hr (41.0 watts) are consumed in the evaporation of water from the urine while 630 B/hr (18.4 watts) are lost to the condenser by radiation and convection.

The total heat rejected by the system into the cooling fluid is 1500 B/hr, (43.9 watts) with 630 B/hr (18.4 watts) from evaporator radiation and convection losses, 810 B/hr (23.7 watts) in heat of condensation for the product water and 60 B/hr (1.7 watts) transferred from the atmosphere through exposed condenser surfaces and fittings.

The heat balance calculations used the following data:

R = Processed water rate = .760 lb/hr. (345 grams/hr)
T_{UT} = Urine tank temperature = 151°F (66.1°C)
T_{UI} = Urine module inlet temperature = 149°F (65.0°C)
T_{UO} = Urine module outlet temperature = 136°F (57.8°C)
T_{HI} = Heating fluid inlet temperature = 161°F (71.7°C)
T_{HO} = Heating fluid outlet temperature = 155°F (68.3°C)
T_{CI} = Cooling fluid inlet temperature = 42°F (5.6°C)
T_{CO} = Cooling fluid outlet temperature = 52°F (11.1°C)
F_U = Urine flow rate = 123.4 lbs/hr. (55.97 kg/hr)
F_H = Heating fluid flow rate = 450 lbs/hr. (204.11 Kg/hr)
F_C = Cooling fluid flow rate = 192 lbs/hr. (87.08 Kg/hr)

Urine solids concentration = 18%

C_{PU} = Urine specific heat = .873 B/lb (2030 Joules/Kg) (Ref. 1)
C_{pd} = Cooling fluid specific heat = .785 B/lb (1825 Joules/Kg) (Ref. 2)
Total heat input = $F_H (T_{HI} - T_{HO})$ = 2700 B/hr (79.0 watts)
Heat input to circulating urine - $F_U C_{pu} (T_{UT} - T_{UO})$ - 1620 B/hr. (47.4 watts)
Urine heat lost in evaporator = $F_U C_{pu} (T_{UI} - T_{UO})$ = 1400 B/hr. (41.0 watts)
Heat of evaporation = $R\ h_{fg}$ (at T_U average) = 770 B/hr. (22.5 watts)
Total heat rejected = $F_c C_{pc} (T_{CI} - T_{CO})$ = 1500 B/hr. (43.9 watts)
Heat of condensation = $R\ h_{fg}$ (at T_c average) = 810 B/hr. (23.7 watts)

Urine line losses = $F_U C_{pu} (T_{UT} - T_{UI})$ = 220 B/hr. (6.4 watts)
Evaporator condenser radiation losses = 300 B/hr. (8.85 watts)
Evaporator condenser convection losses = 330 B/hr. (9.61 watts)
Cooling fluid line losses = $F_c C_{pc} (\Delta T_c)$ = 60 B/hr. (1.7 watts)

Radiation losses assume an emissivity of 0.7 between membrane and porous plate in the Boltzman equation.

Convection losses assume a thermal conductivity of .015 B/hr. ft °F/in the gap.

Cooling fluid line losses assume a temperature increase of 0.2°F (.11°C) each for inlet and outlet headers.

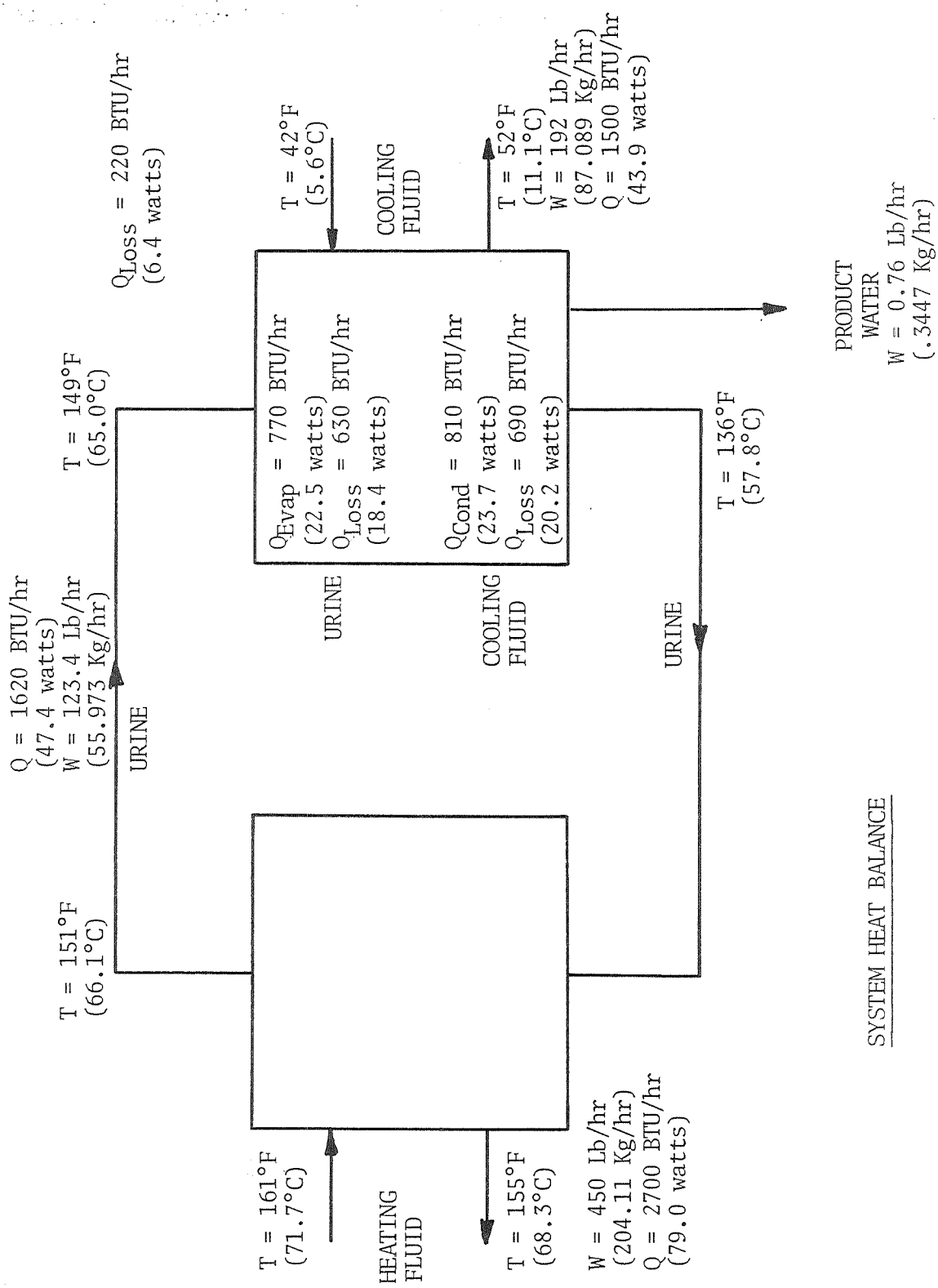

SYSTEM HEAT BALANCE

Figure D-1

Theoretical Effect of Gap Width Variation

The gap permeation constant, K_g, for a predetermined set of operating conditions is inversely proportional to the gap width, Z, in

$$K_g = \frac{D\ P_t\ M}{R_o\ T\ P_{gm}\ Z}$$

where D, P_t, T and P_{gm} are constants determined by the operating conditions and M and R_o are physical constants.

An increase in the gap width from 0.1 to 0.22 inches (2.54 to 5.59 millimeters), then, would result in decreasing K_g by a factor of 2.2.

The overall permeation constant, K_t, is related to K_g and the membrane permeation constant, K_m, by

$$\frac{1}{K_t} = \frac{1}{K_g} + \frac{1}{K_m}$$

For K_m = 0.32 as experimentally determined and K_g = 0.168 for the 0.22 inch gap width, K_{t22} = 0.11.

For the same K_m and K_g = 2.2 (0.168 for the 0.1 inch gap width, K_{t1} = 0.17.

The processing rate, R, in

$$R = K_t\ A\ \Delta P,$$

is directly related to K_t and the total water vapor partial pressure differential between the heated urine and the condensing surface. These partial pressure depend only on the temperatures at these locations.

Decreasing the gap width from 0.22 to 0.1 inch has the effect of increasing the conduction and radiation heat losses between the urine and the condensing surface in a linear relationship, serving to lower the average urine temperature and increase the average condensing temperature. These changes result in a decrease in the ΔP of about 10% for the nominal system conditions.

Thus, the processing rates at 0.1 and 0.22 inch gap widths are related by

$$\frac{R_1}{R_{22}} = \frac{K_{t1}\ A\ (\Delta P \times 0.9)}{K_{t22}\ A\ \Delta P} = \frac{0.9\ K_{t1}}{K_{t22}} = \frac{0.9 \times .17}{.11} = 1.39$$

Process Mathematical Analysis

The driving potential of the VDR process is the water vapor partial pressure gradient which results from the temperature differential between the heated urine and the condenser surface. Appreciable resistance to the mass transfer of water vapor exists through the membrane and across the diffusion gap. The following mathematical analysis has been extracted from Reference 4.

The membrane impedance is defined by the empirical membrane permeability constant K_m, which relates the rate of flow R_m to the pressure drop across the membrane:

$$R_m = K_m A_e (p_1 - p_2) \tag{1}$$

where A_e is the effective membrane area, ft^2 (m^2)

p_1 is the water vapor partial pressure in the brine, $lb/in.^2$ (gm/cm^2)

p_2 is the water vapor partial pressure on the diffusion gap side of the membrane $lb/in.^2$ (gm/cm^2)

R_m is the rate of flow through the membrane, lb/hr. (gm/hr.)

K_m is the permeability constant, $lb/hr\text{-}ft^2$ - psi ($gm/hr\text{-}m^2\text{-}gm/cm^2$)

The diffusional flow of water vapor through a non-condensable gas is described by the following one dimensional diffusion equation:

$$R_g = \frac{D A_d P_t (p_2 - p_3) M}{R_o T P_{gm} Z} \tag{2}$$

where R_g is the diffusion rate, lb/hr. (gm/hr.)

D is the diffusivity of water vapor through the gas, $ft^2/hr.$ ($m^2/hr.$)

A_d is the diffusional cross sectional area, ft^2 (m^2)

P_t is the total pressure, lb/ft^2 (gm/cm^2)

p_2 is the partial pressure of water at the vapor side of the membrane, lb/ft^2 (gm/cm^2)

p_3 is the partial pressure of water at the condenser, lb/ft^2 (gm/cm^2)

M is the molecular weight of water, lb/mole (gm/mole)

R_o is the universal gas constant, 1543 lb-ft/mole-°R (213.7 Kg m/mole °R)

T is the average gap temperature, °R

P_{gm} is the log mean partial pressure of the inert diffusion medium, lb/ft^2 (gm/cm^2)

Z is the gap width, ft. (cm)

The diffusivity, D, of the water vapor through a gas is calculated by the following equation:

$$D = BT^{3/2}\left(\frac{1}{M_1} + \frac{1}{M_2}\right)^{1/2} \qquad \text{(ref. 3)} \quad (3)$$

where $B = \left\{10.7 - 2.46\left(\frac{1}{M_1} + \frac{1}{M_2}\right)^{1/2}\right\} \times 10^{-4}$

T = absolute temperature

M_1, M_2 = molecular weights of components 1 and 2

Equation (2) can be put in the form of equation (1) by letting

$$K_g = \frac{D\ P_t\ M}{R_o\ T\ P_{gm}\ Z}$$

thus

$$R_g = K_g\ A_d\ (p_2 - p_3) \qquad (4)$$

Since

$$R_g = R_m \text{ and } A_e = A_d,$$

equations (1) and (3) may be combined to eliminate p_2, giving

$$R = K_T\ A\ (p_1 - p_3)$$

where

$$\frac{1}{K_T} = \frac{1}{K_g} + \frac{1}{K_m}$$

when

K_T = total diffusivity constant, $\frac{lb/hr}{ft^2\ psi}$ $\left(\frac{gm/hr}{m^2\ gm/m^2}\right)$

Accuracy Analysis

The data readings made during the testing of the system may be assigned the following accuracies:

System temperatures - ± 3°F (± 2°F for thermocouples and ± 1°F for recorder)
System flows - ± 2% full scale reading
System pressures - ± 3% (± 2% for transducers and ± 1% for recorder)
Product water volumes - ± 2%
Urine input weights - ± 2%
Urine specific gravities - ± 2%

The inaccuracies in temperature readings could result in inaccuracies of about ± 6% in the differential pressure driving forces determined from the tables of references 2 and 3. These, combined with the ± 2% inaccuracy in the processing rate calculation due to volume measurement inaccuracies could result in inaccuracies of ± 8% in the calculations of the membrane permeation constants shown in Table 5.

The weight and specific gravity inaccuracies of ± 2% could result in inaccuracies of ± 0.2% in the calculation of the cycle and total recovery efficiencies described above.

The flow inaccuracies of ± 20 pounds per hour for heating fluids, ± 16 pounds per hour for cooling fluid and a nominal ± 4.5 pounds (2.04 kilograms) per hour for urine with a solids content about 30%; when combined with the system temperature measurement inaccuracies of ± 2% F, could result in inaccuracies of up to ± 8% for specific items in the heat balance calculation shown above.

APPENDIX E

Operating Instructions

Operating Instructions

1. Membrane module installation

   - Remove module from bag.
   - Apply thin coating of silicone lubricant to module "O" seal.
   - Slide module into opening in evaporator housing of evaporator/condenser assembly. Apply hand pressure to ensure that "O" seal is completely within housing. Further seating of module is not required.

2. Initial urine charge

   - Manually fill pretreatment tank with new urine.
   - Inject 4 milliliters of pretreat chemical for each liter of urine.
   - Apply about 4 psig (28 gm/cm^2) gas pressure to pretreat tank.
   - Turn all system switches to OFF.
   - Turn MAIN POWER switch to ON.
   - Turn URINE FILL CONTROL switch to AUTO. Urine feed valve will be activated and remain open until cycle tank is filled.

3. Initial system priming

   - Install bypass line between one set of urine inlet and outlet header quick connects.
   - Turn MAIN POWER, PUMP NO. 1 and PUMP NO. 2 switches ON. Observe urine flow in bypass line.
   - Connect inlet and outlet disconnects, in order, to one membrane module. Observe flow in urine outlet line.
   - Repeat for two additional modules, turning PUMP No. 3 switch ON if additional pumping capacity is required.
   - Disconnect bypass line and connect fourth module.
   - Apply nitrogen pressure to gap supply port. Adjust to about 0.5 psig (35 gm/cm^2).

4. System start-up

   - After completing operations 1, 2 and 3 above, turn on external heating and cooling fluid flows.
   - Turn HEATING FLUID CONTROL, PRODUCT WATER DIVERT, COOLING FLUID CONTROL, URINE FILL CONTROL, SOLIDS CONTROL and SOLIDS DIVERT switches to AUTO. Turn AUDIO ALARM switch ON.
   - Adjust nitrogen pressure to maintain about 0.5 psig (35 gm/cm^2) in gap.
   - Adjust heating and cooling fluid flows to maintain desired evaporating and condensing temperatures.

5. Heat cycle control

   - With HEAT CYCLE switch OFF, open control panel to provide access to time switch.
   - Set time switch to local time by rotating indicator dial until pointer indicates current time. Set on and off trippers on indicator dial for desired heat cycle starting time and duration.
   - Close panel, turn HEAT CYCLE switch ON.
   - YELLOW light indicates control on.
   - RED light indicates heat cycle on.

6. Heating fluid control

   - The heating fluid control circuit will provide diversion of the heating fluid flow from the urine cycle tank through a signal from a thermistor in the urine outlet line if the temperature exceeds 150°F (66°C) with the HEAT FLUID CONTROL switch in AUTO.
   - Heating fluid may be diverted at any time by turning HEATING FLUID switch to MANUAL.
   - Control may be removed by turning HEATING FLUID CONTROL switch to OFF.
   - RED light indicates control on.

7. Product water divert

   - The product water divert circuit will provide diversion of the product water through a signal from the product water conductivity meter if the conductivity exceeds 500 micromhos per centimeter with the PRODUCT WATER DIVERT switch in AUTO.
   - Product water may be diverted at any time by turning PRODUCT WATER DIVERT switch to MANUAL.
   - Control may be removed by turning PRODUCT WATER DIVERT switch to OFF.
   - RED light indicates control on.

8. Cooling fluid control

   - The cooling fluid control circuit will provide diversion of the cooling fluid flow from the condenser modules through a signal from a thermistor in the cooling fluid outlet line if the temperature goes below 40°F (4°C) with the COOLING FLUID CONTROL switch in AUTO.
   - Cooling fluid may be diverted at any time by turning COOLING FLUID CONTROL switch to MANUAL.
   - Control may be removed by turning COOLING FLUID CONTROL switch to OFF.
   - RED light indicates control on.

9. Urine fill control

   - Urine will be fed from the pretreat tank to the cycle tank on a signal from the cycle tank feed control level sensor with the URINE FILL CONTROL in AUTO.

- Urine may be fed at any time by turning the URINE FILL CONTROL switch to MANUAL.
- Control may be removed by turning URINE FILL CONTROL switch to OFF.
- YELLOW light indicates control on (AUTO).
- RED light indicates feed in progress.

10. Solids Control

- Urine feed will be interrupted and a urine concentration cycle started in preparation for a solids dump by the solids control circuit on a signal from the urine conductivity meter when the solids concentration reaches 30% with the SOLIDS CONTROL switch in AUTO.
- A concentration cycle may be initiated at any time by turning the SOLIDS CONTROL switch to MANUAL.
- Control may be removed by turning SOLIDS CONTROL switch to OFF.
- RED light indicates circuit on.

11. Solids divert

- Urine solids will be dumped from the system through a divert solenoid valve in the urine line on a signal from the cycle tank solids divert control level sensor at the conclusion of a urine concentration cycle with the SOLIDS DIVERT switch in AUTO.
- Solids may be dumped at any time by turning the SOLIDS DIVERT switch to MANUAL.
- Control may be removed by turning SOLIDS DIVERT switch to OFF.
- YELLOW light indicates control on (AUTO).
- RED light indicates dump in progress.

12. Audio alarm

- An audible signal will be generated by the alarm circuit upon the activation of the product water divert circuit with the AUDIO ALARM switch ON.
- YELLOW light indicates switch on.

13. Membrane module replacement

- Remove quick connect from urine inlet (bottom) of module.
- Remove quick connect from urine outlet.
- Remove module by pulling out of evaporator housing by handle.
- Install new module as in procedure 1.
- Prime new module as in procedure 3.

14. System shut down

- Turn off gap nitrogen supply.
- Remove quick connects from one module and install bypass line.
- Remove quick connects from remaining modules.
- Remove modules.

- Turn off main power switch.
- Turn off heating and cooling fluid flows.

15. System interfaces

- Gap nitrogen supply

  0 - 2 psig (0 - 140 gm/cm^2)
  0 - 500 milliliters per minute
  Room temperature

- Pretreatment tank nitrogen supply

  0 - 8 psig inlet (0 - 560 gm/cm^2)
  0 - 5 liters per minute (vent only)
  Room temperature

- Heating fluid supply (filtered water)

  7 - 10 pounds per minute (3.2 - 4.5 kilograms per minute)
  0 - 60 psig (0 - 4.22 kilograms/cm^2)
  150 - 160°F (66-77°C)

- Cooling fluid supply (filtered water or glycol solution)

  5 - 8 pounds per minute (2.3 - 3.6 kilograms per minute)
  0 - 60 psig inlet (0 - 4.22 kilograms/cm^2)
  40 - 45°F (4 - 7°C)

- Electrical power

  110 - 120 volts AC
  200 watts

- Instrumentation

  Ports provided for thermocouple installation at heating fluid, cooling fluid and urine inlet and outlet fitting as noted in Figure 19.

APPENDIX F

References

REFERENCES

1. Putnam, D. F., Composition and Concentrative Properties of Human Urine, McDonnell Douglas Astronautics Company Report DAC-61125-F1, Huntington Beach, California, June 1970.

2. Hodgman, Charles D., Editor, Handbook of Chemistry and Physics, Chemical Rubber Co., Cleveland, Ohio, 1959.

3. Coe, W. B. and H. J. Kolnsberg, An Improved Water Reclamation System Utilizing a Membrane Vapor Diffusion Still Concept, NASA Contractor Report No. 66154.

4. Kolnsberg, Henry and Melvin Stoltz, A Study to Analyze and Develop Design Criteria for a Flight Concept Prototype Vapor Diffusion Water Reclamation Unit, NASA Contractor's Report No. 66637.

5. Treybal, Robert E., Mass Transfer Operations, McGraw-Hill, New York, 1955.