Fill as AD-732949

[redacted]

NOV 1971
RECEIVED
NASA STI FACILITY
INPUT BRANCH

UNIVERSITY OF MARYLAND
COMPUTER SCIENCE CENTER

COLLEGE PARK, MARYLAND

N72-13131 (NASA-CR-124692) PERFORMANCE OF OPTIMUM DETECTOR STRUCTURES FOR NOISY INTERSYMBOL INTERFERENCE CHANNELS J.D. Womer, et al (Maryland Univ.) Jul. 1971 190 p CSCL 17B

Unclas
08409 G3/07

FACI (NASA CR OR TMX OR AD NUMBER) (CATEGORY) 01

Technical Report TR-164 July 1971
AFOSR-71-1982

PERFORMANCE OF OPTIMUM DETECTOR STRUCTURES FOR NOISY INTERSYMBOL INTERFERENCE CHANNELS

by

J. D. Womer*, B. D. Fritchman*, and L. N. Kanal**

*Department of Electrical Engineering, Lehigh University, Bethlehem, Pa.

**Computer Science Center, University of Maryland, College Park, Md.

FOREWORD

This investigation was conducted by J. D. Womer, B. D. Fritchman and L. N. Kanal (Principal Investigator). It was sponsored by the Mathematical and Information Sciences Directorate, Air Force Systems Command, U.S.A.F. under grant AFOSR 71-1982 to the University of Maryland. Lt. Col. Russell B. Ives, U.S.A.F., served as technical monitor. Dr. Fritchman's work on this program was partly supported by the Department of Electrical Engineering, Lehigh University, Bethlehem, Pennsylvania and Dr. Kanal's work was supported in part by the Computer Science Center of the University of Maryland, College Park, Maryland.

ABSTRACT

When transmitting digital information by radio or wire-line systems, errors may arise from additive noise and from successively transmitted signals interfering with one another. This report presents new results on evaluating the probability of error, i.e. performance, of optimum detector structures which are obtained when compound statistical decision theory is used to unravel noisy intersymbol interference patterns in the received signal. It includes a comparative study of the performance of certain detector structures and approximations to them, and the performance of a transversal equalizer. The report also shows that the optimum compound statistical decision procedure is not equivalent, either to subtracting out the interfering energy from the received signal, or to gathering together the energy which is dispersed throughout the received signal.

TABLE OF CONTENTS

		FOREWORD	i
		ABSTRACT	ii
		TABLE OF CONTENTS	iii
		LIST OF FIGURES	vii
		LIST OF TABLES	ix
		TECHNICAL SUMMARY	1
Chapter 1		INTRODUCTION	4
	1.1	PROBLEM BACKGROUND	4
	1.2	SCOPE OF THE WORK	16
Chapter 2		INTERSYMBOL INTERFERENCE	20
	2.1	SOURCE OF INTERSYMBOL INTERFERENCE	20
	2.2	FORMULATION OF THE PROBLEM	24
Chapter 3		COMBATING INTERSYMBOL INTERFERENCE	35
	3.1	WAVEFORM SHAPING	35
	3.2	TRANSVERSAL EQUALIZERS	37

Chapter 4 APPLICATION OF DECISION THEORY TO INTERSYMBOL INTERFERENCE 42

4.1 DECISION THEORY 42

4.1.1 SIMPLE DECISION THEORY 45

4.1.2 COMPOUND DECISION THEORY 47

4.1.3 SEQUENTIAL COMPOUND DECISION THEORY 50

4.2 APPLICATION OF DECISION THEORY 52

4.2.1 CHANG AND HANCOCK DETECTOR 54

4.2.2 MINIMIZATION OF THE EXPECTED NUMBER OF ERRORS 57

4.3 SEQUENTIAL DETECTION 59

4.4 CRITERIA OF OPTIMALITY 62

Chapter 5 SEQUENTIAL DECISION RULE AND PROBABILITY OF ERROR 63

5.1 DECISION STATISTIC 63

5.2 CALCULATION OF DECISION STATISTIC 65

5.3 DECISION REGION 68

5.4 PROBABILITY OF ERROR 71

5.5	DIFFERENCE EQUATION	74
5.6	REGION OF CONVERGENCE	75
5.7	APPLICABILITY OF SEQUENTIAL PROCEDURE	85
Chapter 6	OPTIMUM DETECTION FOR BLOCK TRANSMISSION OF LENGTH N	86
6.1	DECISION RULE	86
6.2	INDEPENDENCE THEOREMS	87
6.3	EVALUATION OF DECISION STATISTIC	90
6.4	RECURSIVE RELATIONSHIPS	93
6.5	DECISION REGION	101
6.6	PROBABILITY OF ERROR	105
6.7	GENERALIZED DECISION REGION AND PROBABILITY OF ERROR	108
6.8	REDUCTION OF JOINT-CONDITIONAL PROBABILITY	113
Chapter 7	DATA ANALYSIS	121
Chapter 8	CONCLUSION	144
8.1	SUMMARY	144

8.2	SUGGESTIONS FOR FURTHER RESEARCH	148
APPENDIX A	SEQUENTIAL DIFFERENCE EQUATION	151
APPENDIX B	CONVERGENCE OF v^2	157
APPENDIX C	SUFFICIENT CONDITION FOR CONVERGENCE OF DIFFERENCE EQUATION SOLUTION	160
APPENDIX D	PROOF OF THEOREMS	163
	REFERENCES	177

LIST OF FIGURES

Fig. 1	Communication system model	5
Fig. 2	Ideal channel characteristics	21
Fig. 3	Superimposed impulse responses of ideal lowpass channel	22
Fig. 4	Bandpass communication system model	25
Fig. 5	Equivalent lowpass communication system model	27
Fig. 6	Equivalent waveform generator	28
Fig. 7	Model of communication system studied	30
Fig. 8	Schematic of transversal equalizer	38
Fig. 9	Decision regions for sequential procedure with m = 4	69
Fig. 10	Decision region and probability of error for sequential decision procedure with m = 2	72
Fig. 11	Regions of convergence of the difference equation solution for L = 3 (h_1 = 1)	81

Fig. 12 Detector performance ($h_1 = 5/8$, $h_2 = 1$, $h_3 = 1/2$) 127

Fig. 13 Detector performance ($h_1 = 1/8$, $h_2 = 1$, $h_3 = 1/4$) 128

Fig. 14 Detector performance ($h_1 = 1$, $h_2 = 0.1$, $h_3 = 0.8$) 129

Fig. 15 Detector performance ($h_1 = h_2 = h_3 = 1$) 137

Fig. 16 Comparison of compound procedure with other types of detection ($h_1 = 1$, $h_2 = 0.1$, $h_3 = 0.8$) 138

Fig. 17 Comparison of compound procedure with other types of detection ($h_1 = h_2 = h_3 = 1$) 139

Fig. 18 Comparison of compound procedure with other types of detection ($h_1 = 1/8$, $h_2 = 1$, $h_3 = 1/4$) 140

Fig. 19 Comparison of compound procedure with other types of detection ($h_1 = 5/8$, $h_2 = 1$, $h_3 = 1/2$) 141

LIST OF TABLES

Table I	Probability densities obtainable from equation (118)	117
Table II	Calculated means and variances	125
Table III	Information Measure	135

PERFORMANCE OF OPTIMUM DETECTOR STRUCTURES
FOR NOISY INTERSYMBOL INTERFERENCE CHANNELS

TECHNICAL SUMMARY

This study deals with the application of decision theory to the problem of detecting signals transmitted over a channel which corrupts the signal by inducing intersymbol interference and by adding noise. The communication channel is assumed to be time invariant. The transmission of digital m-ary data is considered. Both one-shot and multi-shot communication is studied. The intersymbol interference is assumed to be of finite duration and to extend over L signaling intervals. The noise is assumed to be a stationary normal random process.

For multi-shot communication, sequential compound decision theory is applicable. By making use of this theory, the optimum sequential detection procedure is obtained. By definition this procedure uses only past and present outputs of the channel in order to decide on the present channel input. This decision procedure is reduced to the classical m-state decision problem in which the k-th channel input is corrupted by noise of variance $v^2\sigma^2$

(σ^2 is the noise variance of the actual physical channel). Note, v^2 is a function of k. The calculation of the performance, which this formulation allows, has not previously been realized.

The relationship between the channel impulse response and v^2 (and thus, indirectly, the performance of the decision procedure) is considered. The relationship involves a difference equation. The convergence of the solution of the difference equation is studied.

For one-shot transmission, the optimum compound decision procedure is presented. This compound procedure results in a generalized expression which can be used to approximate the decision regions and the associated probability of error. The probability of error is not obtainable in closed form, but is studied in depth for the case L = 3.

In general, it is not known how to evaluate the actual performance of the compound decision procedure. Hence, approximations are obtained which approximate the true optimum compound performance. A channel "output directed approximation" and several channel "input directed approximations" are presented.

A comparison is made between the calculated sequential compound performance, the simulated optimum compound performance, the performance of a transversal equalizer, and the performance obtained by means of one of the above

approximations. For all channel impulse responses considered, at least one of the approximations was in very good agreement with the simulated optimum compound procedure. For the impulse responses studied, a method is presented whereby the best approximation can be selected merely by examining the values of the sampled impulse response. Finally, the results show that the optimum compound procedure is not equivalent to either subtracting out the interfering energy from the received signal or to gathering together the energy which is dispersed throughout the received signal.

Chapter 1

INTRODUCTION

1.1 PROBLEM BACKGROUND

The transmission of information from a "transmitter" to a "receiver" is fraught with the possibility of incorrect reception of the information whether it be communication via speech, radio waves, sonar, or even a glance between a man and his wife. The errors in reception are induced by the transmitter, the receiver, or the "channel" over which the information is transmitted.

In particular, in the transmission of digital information by means of radio or wireline systems, errors will occur in the reception of the digits. The system design goal is to reduce the rate of making an error to as low a value as possible. A model for this communication system is given in Fig. 1. The transmitter obtains the information from the information source and sends it over the channel. The receiver receives the information from the channel and presents it to the information destination. The channel includes all parts of the communication system between the transmitter and receiver over which the information is transferred. There are essentially two sources of error in this type of communication system.

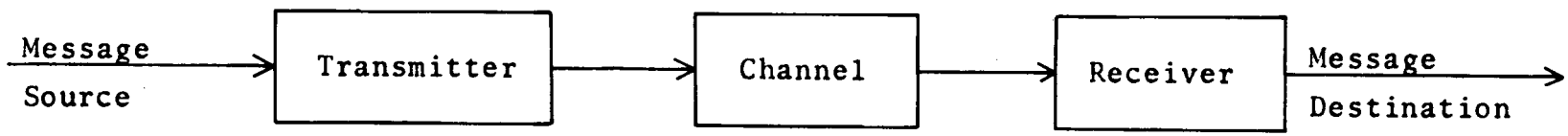

Communication system model

Fig. 1

Errors may arise from additive noise. This is a random fluctuation in the received signal which may be due to noise radiation from the sky, thermal noise in resistors, shot noise in electron tubes and solid state devices or other random signals that arise due to the physical attributes of the communication system. Errors also arise from distortion of the transmitted signal. Distortion may be defined as departures of the signaling waveforms from the ideal when the departures are not strictly random. Some typical causes of this are bandlimiting filters within the system, echos due to improper impedance matching at system interfaces, and multiply received signals scattered from different layers of the Ionosphere or Troposphere. Such forms of distortion may cause successively transmitted signals to interfere with one another in which case the distortion is said to cause intersymbol interference. Intersymbol interference is, therefore, an undesired time-overlap of signaling waveforms which may occur in the transmission of successive digits. If the received signal waveform is non-zero for a finite time interval, then only a finite number of symbols are part of the intersymbol interference. For instance, suppose that the digital symbols are transmitted at a rate of 1/T bauds and that the received signal is sampled at the corresponding rate of 1/T samples per second. Then for a finite duration of the received signal waveform, the sampled output values

are functions of a finite number of digital inputs—i.e. each sampled output value is dependent on more than one input. (The output, of course, depends on the noise as well.) If the output depends on L inputs, the intersymbol interference is said to extend over L symbols.

Intersymbol interference is especially severe at high data rates. If one desires to transmit without intersymbol interference and can tolerate low data rates, intersymbol interference can be circumvented simply by transmitting a digit and then waiting until the effects of that digit become zero at the receiver before transmitting the next digit. Nyquist [1] has shown that, for an ideal channel (constant amplitude response and linear phase response), the highest rate at which a symbol can be transmitted without intersymbol interference is $1/T^*$ bauds where $T^* = 1/2W$ is the positive frequency bandwidth of the system. For non-ideal channels of bandwidth W it is still possible to transmit at the Nyquist rate but not without some intersymbol interference. Historically, the most common way of transmitting digital data was to transmit binary symbols at a symbol rate considerably less than $1/T^*$. Intersymbol interference was thus not that much of a problem. Most of the errors were due to the additive noise in the system. With the advent of computers and the desire for remote communication with computers, it has become increasingly desirable to

transmit at higher and higher data rates. At these higher data rates, as the symbol rate approaches 2W' bauds, where W' is the nominal value for the bandwidth of the channel, intersymbol interference becomes more of a problem and attention has been given to the study of the transmission of digital information in the presence of intersymbol interference and noise.

There are two general ways to combat intersymbol interference. They are as follows:

i. use a signaling scheme which either eliminates intersymbol interference or holds it to a tolerable level.

ii. use a detection scheme which compensates for the intersymbol interference and noise.

Various methods, which are used to counteract intersymbol interference, will be discussed below. These methods include methods from each of the above two categories. All methods are subject to restrictions imposed by the finite width of the frequency spectrum of the communication system.

Four methods which belong to the first category will be discussed. The first of these methods is to transmit m-ary symbols instead of binary. The data rate can thus be increased without increasing the symbol rate [2]. Thus, by transmitting at the highest symbol rate at which

intersymbol interference does not occur, the rate of transmission of information can be increased without causing intersymbol interference by increasing m, the number of signaling waveforms. This increase in the input alphabet is done at the expense of increasing the effect that the noise has in causing an error in the reception of the symbol.

In most electronic communications, modulation of a carrier by the m waveforms of the input alphabet is necessary. For a fixed-length alphabet the data rate per cycle of bandwidth depends on the type of modulation used. Vestigial sideband amplitude modulation (VSG-AM) or single sideband amplitude modulation (SSB-AM) leads to a higher data rate than does double sideband amplitude modulation (DSB-AM) [3,4]. The data rate per cycle of bandwidth for SSB-AM is twice that of DSB-AM while that for VSG-AM is almost as high as the data rate for SSB-AM.

Spectrum shaping can also be used as a means of transmission without intersymbol interference. An example of this is a raised cosine response [3]. The frequency spectrum of the communication system is modified by input and output filtering so that the spectrum has a raised cosine shape. Just as the Nyquist rate gives a maximum symbol rate for the ideal channel a maximum symbol rate can be calculated for the raised cosine channel. The maximum symbol rate for the raised cosine channel is less,

on a per unit bandwidth basis, than the Nyquist rate. To retain the same data rate leads to increased bandwidth requirements. The raised cosine channel, in many cases, is a closer approximation to a real channel than is the ideal channel and thus is a more realistic communication model.

Another form of spectrum shaping [5] specifies the shapes of time-limited transmitted waveforms which are necessary in order to ensure that, after passing through the (linear) channel, the received waveforms are also time-limited. For certain channels, the signaling waveforms can be so chosen that the time duration of both the transmitted signal and the received signal can be made arbitrarily small. Thus for each element of the input alphabet, a proper shape of the corresponding signaling waveform can be chosen so that no intersymbol interference occurs.

A fourth technique which may be used is that of partial response signaling [3,6]. This includes duobinary [7] and polybinary signaling [8]. These methods are closely aligned to the above described method of input signal shaping. However, these techniques result in intersymbol interference over a limited number of sampling times. The input signal is selected so that, by proper compensation in the receiver, the transmitted message (neglecting the effects of the additive noise) would be

received correctly in spite of the intersymbol interference. Because of the increase in the number of signaling levels, these methods exhibit a greater degree of noise sensitivity than other simpler signaling techniques.

The above procedures are ways in which intersymbol interference can be eliminated or handled with relative ease. Ideally then high data rates can be achieved with little or no intersymbol interference. However, due to departures from the ideal, intersymbol interference still occurs and becomes a problem. Also the above schemes cannot in general counteract intersymbol interference at symbol rates which approach the Nyquist upper limit of 2W bauds. Methods from the second category (given above) are thus necessary to compensate for intersymbol interference and thus allow for the correct detection of the transmitted symbols in the presence of intersymbol interference and noise.

Probably one of the more obvious ways of transmitting information in the face of unreliable reception is to use redundancy coding. This remains a valid method when the received signal is corrupted by intersymbol interference and additive noise. The coding scheme used is selected so that errors which occur in the communication system may be detected and corrected. This method may not perform satisfactorily if an error burst occurs. The use of

redundancy coding works for moderate data rates but breaks down for high data rates [9,10].

Another method of compensation is to use quantized feedback [11]. With this method the receiver takes the signal received during any signaling interval, say $kT \leq t \leq (k+1)T$ and decides on which of the m possible symbols was transmitted. Based on this decision and assuming the channel characteristics are known at the receiver, the remainder of the signal due to the transmitted symbol is generated. This generated "tail" is then subtracted from the received signal. Thus the symbol transmitted at time KT has no effect on the waveform presented to the detection circuitry for time $t \geq (k+1)\ T$. Proceeding sequentially in this manner for all inputs, the intersymbol interference can be removed in the receiver. This scheme is based on the assumption that the symbol is always detected correctly. If noise is present errors may occur. A resulting drawback in this procedure is that one error may lead to the occurrence of many more errors.

Probably the most widely used method of compensating for intersymbol interference is to use linear equalization [9,12-17]. Here the received signal is passed through a linear filter prior to detection. The linear filter usually consists of a properly terminated tapped delay line (or its digital equivalent) with taps spaced every

T seconds. This type of filter is called a transversal equalizer. The tap gains are set so as to minimize some measure of the intersymbol interference or the intersymbol interference plus noise. The sum of tap outputs with each tap output multiplied by its respective gain is used in the receiver to make a decision on the value of the transmitted symbol. Although all transversal equalizers have essentially the same form different measures of interference may be used. This leads to different methods for computing the tap gains. Some also employ decision feedback and some adaptively compute tap gains. A more detailed discussion of the transversal equalizer and its use in the compensation of intersymbol interference is given in Chapter 3.

Another possible way of treating the detection problem is to use statistical decision theory. The reason that this treatment is necessary is given below.

The methods of the first category which are listed above are ways in which, ideally, transmission of digital symbols can occur without intersymbol interference. For a real communication system this unfortunately does not happen. Departures from the ideal result in intersymbol interference occurring in spite of the techniques which may be used in an attempt to prevent the occurrence of intersymbol interference. Thus techniques from the second category—compensation for intersymbol interference—

assumes great importance in achieving good data transmission. However, the methods given above for the compensation of intersymbol interference all have drawbacks. Partial response signaling leads to an enhancement of the effects that the noise has on the received signal. Quantized feedback leads to fatal error propagations. The use of transversal equalizers imposes a linear solution on a detection problem that, in fact, actually has a non-linear solution. As such, the transversal equalizer is a sub-optimum solution to the detection of signals in the presence of intersymbol interference and noise. The other above detection methods are also sub-optimal. A better solution—i.e. a detection scheme which has a lower probability of error—should be sought. For best data transmission it is necessary to seek the optimal or best detection procedure.

This optimum detection or decision procedure can be obtained from the results of decision theory. Decision theory specifies what decision should be made about the value of a symbol in order that the probability of making an error is minimized. By means of decision theory, Chang and Hancock [18] have presented a solution to the problem of detecting symbols transmitted over a noisy intersymbol interference channel. Their solution is an approximation to the optimum detection procedure which uses the minimization of the probability of making an error in the

message as an optimality criterion. A more common and, perhaps, more useful optimality criterion is the minimization of the expected number of errors in a message. This latter optimality criterion is used in this report. The application of statistical decision theory to noisy intersymbol interference channels and the results of such an application are the main concern of this investigation. We develop the optimal procedure for the detection of symbols in the presence of both intersymbol interference and noise, and present a calculable measure of the probability of error inherent in the decision procedure. Note for the sub-optimal procedures mentioned above and for the Chang and Hancock procedure, the probability of error associated with each procedure could not, in general, be calculated. The performance (probability of error) could be obtained only by simulating the procedure on a computer. Our investigation also allows the comparison of the performance of some sub-optimal procedures with the performance of the optimal procedure. Such a study was needed, for it provides a specification of what the optimum detector structure should be for good data transmission and what the associated expected performance would be. The specific nature of the study presented in this report is outlined in Sec. 1.2.

1.2 SCOPE OF THE WORK

This study deals with the transmissions of m-ary digital data over a noisy intersymbol interference channel which has interference extending over L signaling periods. The noise is considered to be uniform over the frequency spectrum of interest. The noise samples are considered to have a normal distribution. Both one-shot and multi-shot transmission is examined. The channel impulse response is assumed to be time invariant and is assumed known. It is expected that the results obtained can be extended to time variant channels without a great deal of difficulty. As pointed out in Sec. 2.2, these restrictions are not too prohibitive.

The optimum detection of the transmitted symbols is considered for both one-shot and multi-shot transmissions. For both these cases the optimum detection procedure with its associated decision regions is derived. For each of these cases the theoretical probability of error is given. For multi-shot transmission, the probability of error is calculated. For one-shot transmission good approximations to the probability of error are calculated.

Note that the calculation of the probability of error or of its approximation is important. This calculation provides a basis for the evaluation of schemes which are proposed for the compensation of intersymbol interference.

It allows one to determine how well the proposed procedure works in relation to the optimum procedure. The calculation also allows one, with relative ease, to determine how the performance is affected by a change in the impulse response of the channel. This would allow one to design his communication system to obtain best results by shaping his impulse response so that good performance could be obtained. Regions in which the optimum rule performs well are specified in the report. Another important facet of this calculation is that it avoids the need for simulations in order to obtain an estimate of the probability of error. Due to the complexity of the calculation, the probability of error associated with various schemes proposed by other authors [5-9, 11-18] to compensate for intersymbol interference was not calculated. The probability of error was obtained only by simulation of the classification procedure on a digital computer. To get an accurate estimate of the probability of error at high signal-to-noise ratios means that many transmitted symbols must be simulated. The calculations presented in this report avoid the expense of long computer simulations.

Finally, the report presents comparisons of the performance of the optimum procedure, the approximations to the performance and the simulated performance of a transversal equalizer.

In Chapter 2 a discussion of the noisy intersymbol interference channel and a model for that channel is presented. Chapter 3 discusses in more detail several of the detection schemes which have been presented above. Since decision theory is used in arriving at the evaluation of the probability of error, Chapter 4 gives a tutorial presentation of those aspects of decision theory which are used in this report. Chapter 4 also considers the work by Chang and Hancock dealing with the application of decision theory to noisy intersymbol interference channels. In Chapter 5, sequential compound decision theory is applied to the multi-shot transmission case. The rule for decision is presented along with the theoretical probability of error. The types of channel impulse responses for which the rule is applicable along with an indication of the relationship between the performance and the impulse response is also given. Chapter 6 presents the application of non-sequential decision theory to one shot transmission, the resulting decision region, and the theoretical probability of error. In Chapter 7, the probability of error, evaluated as described in Chapters 5 and 6, is given for various channels. Comparisons are made between

i. calculated probability of error

ii. calculated approximations to the probability of error

iii. probability of error obtained from simulations of the optimum decision procedure

iv. probability of error obtained by simulations of the transversal equalizer

Chapter 8 gives a summary and suggestions for further work.

Chapter 2

INTERSYMBOL INTERFERENCE

2.1 SOURCE OF INTERSYMBOL INTERFERENCE

As noted in Chapter 1, intersymbol interference is a problem for moderate to high data rates. Sunde [19] gives a presentation which shows how the physical characteristics of the channel bring about intersymbol interference. Intersymbol interference is caused by deviations in the phase and gain characteristics of the channel in the bandpass region and by low frequency cut-off of the signal in the bandpass.

As an example, consider the transmission of amplitude modulated impulses through an ideal lowpass channel with gain and phase characteristics as given in Fig. 2. The symbols are transmitted at a rate of one symbol every $T^* = 1/2W$ seconds. The impulse response of the channel is the well known $\frac{\sin 2W\pi t}{2W\pi t}$. This function has a zero crossing at every point which is a multiple of T^* seconds away from the peak which occurs at $t = 0$. Now if a symbol is transmitted every T^* seconds, the received signal will consist of superimposed $\frac{\sin 2W\pi t}{2W\pi t}$ responses as shown in Fig. 3. The magnitude of the peaks is dependent on the value of the transmitted symbol. The peaks are separated

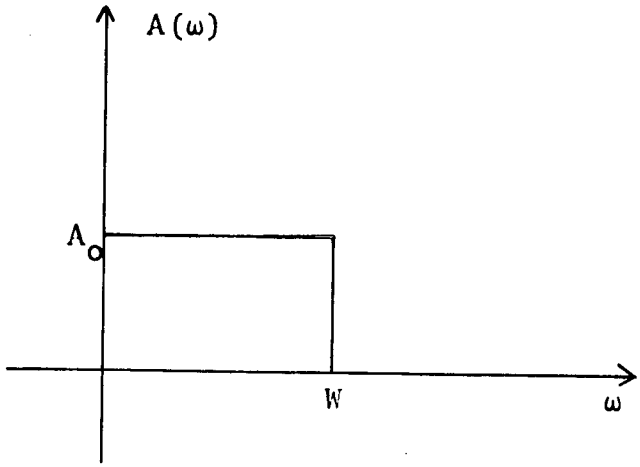

Amplitude characteristic, A(ω)

Fig. 2a

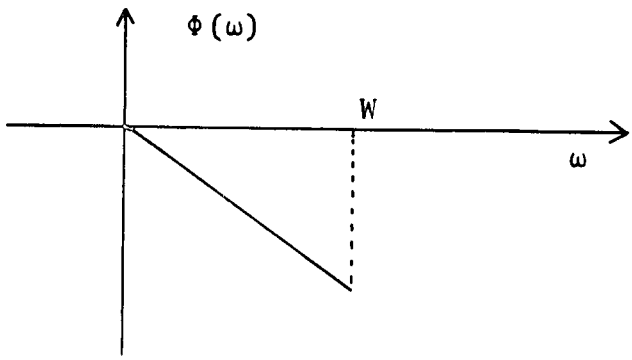

Phase characteristic, Φ(ω)

Fig. 2b

Ideal channel characteristics

Fig. 2

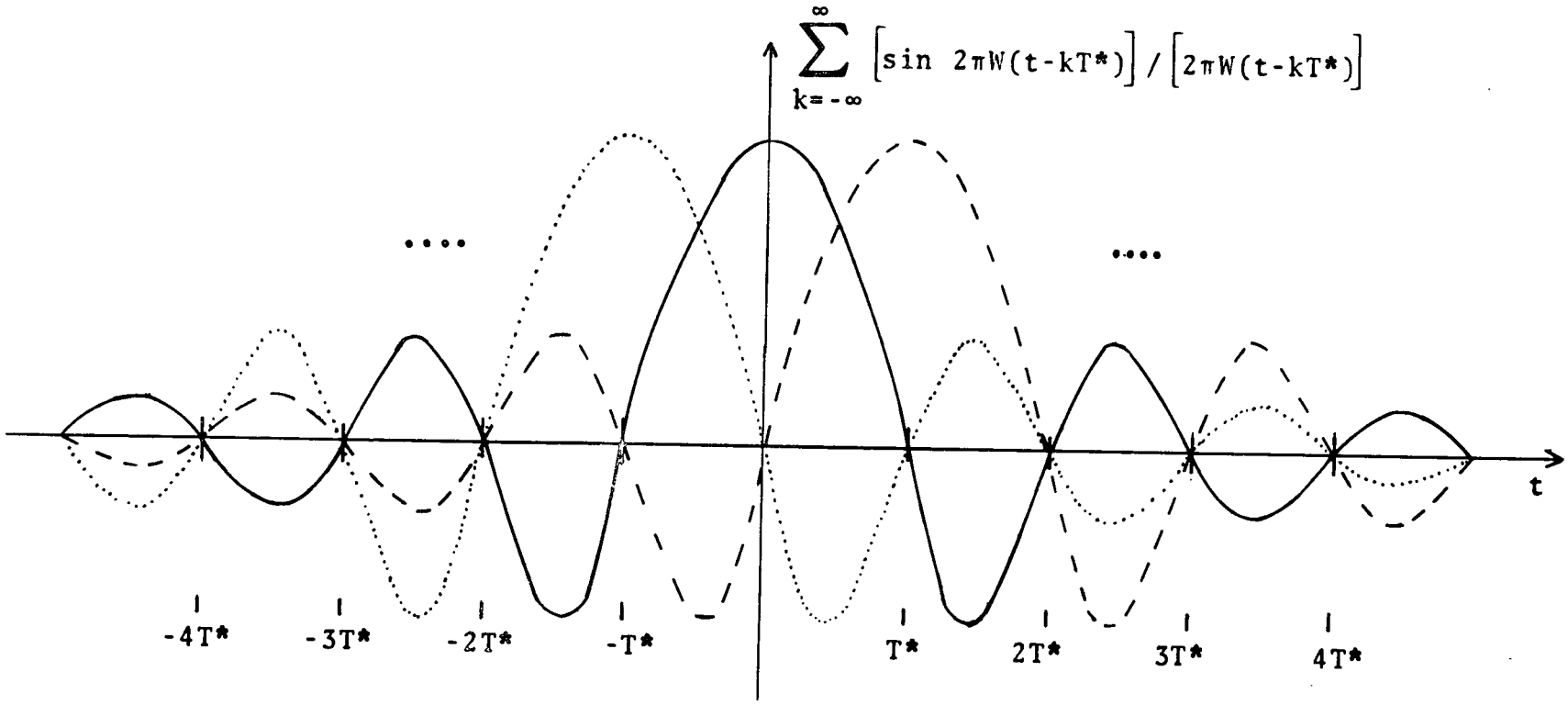

Superimposed impulse responses of ideal lowpass channel

Fig. 3

by a distance of T^* seconds. Since the peak value due to any symbol occurs where the response to all other transmitted symbols is zero, i.e. at $t = \pm iT^*$, $i = 0, 1, \ldots, \infty$, intersymbol interference (at these instances) is eliminated in the sampled received waveform and in the detection process. Nyquist's theorem states that for this ideal channel, a symbol rate of 2W bauds is the highest rate that can be obtained for which the transmitted waveform can be reconstructed at the receiver.

For a real channel, the amplitude response is no longer constant, the phase response is not linear and the frequency cut-off is not sharp. One effect of all this is to make the time separating the zero crossings of the impulse response greater than T^* seconds. If one would continue to transmit and sample every T^* seconds, the sampled received signal would be corrupted by intersymbol interference. Because of the desire for high data rate communication all modern systems must be designed with intersymbol interference in mind. The detection process must be one which makes a good decision about the transmitted symbol in the presence of both intersymbol interference and noise.

2.2 FORMULATION OF THE PROBLEM

In order to study intersymbol interference a model for the communication system is necessary. A commonly accepted model for a digital communication system is given in Fig. 4. The inputs, B_k, $k = 1, \ldots, N$, which are discrete random variables, may take on one of m values (for m-ary data)*. The time interval between inputs will be taken to be T seconds. The random input at time kT is denoted by B_k. B_k takes on one of the values $b_1, \ldots, b_m$. The channel of Fig. 4 is, in general, a bandpass channel with transfer function $H_B(\omega)$. The channel adds noise, $N(t)$, to the signal. $N(t)$ is a random process. Let $s_i(t-kT)$ be the transmitted signal corresponding to the input B_k when $B_k = b_i$, i.e.

$$S_k(t-kT) = s_i(t-kT).$$

Then the total transmitted signal, $S(t)$, is the sum of the component signals

$$S(t) = \sum_{k=1}^{N} S_k(t-kT).$$

After passage through the channel, the signal is demodulated, sampled every T seconds and passed through a detector. The detector uses the sampled received waveform to generate

---

*Note throughout the paper when upper case letters are used to denote random variables, lower case letters will denote the values of the random value.

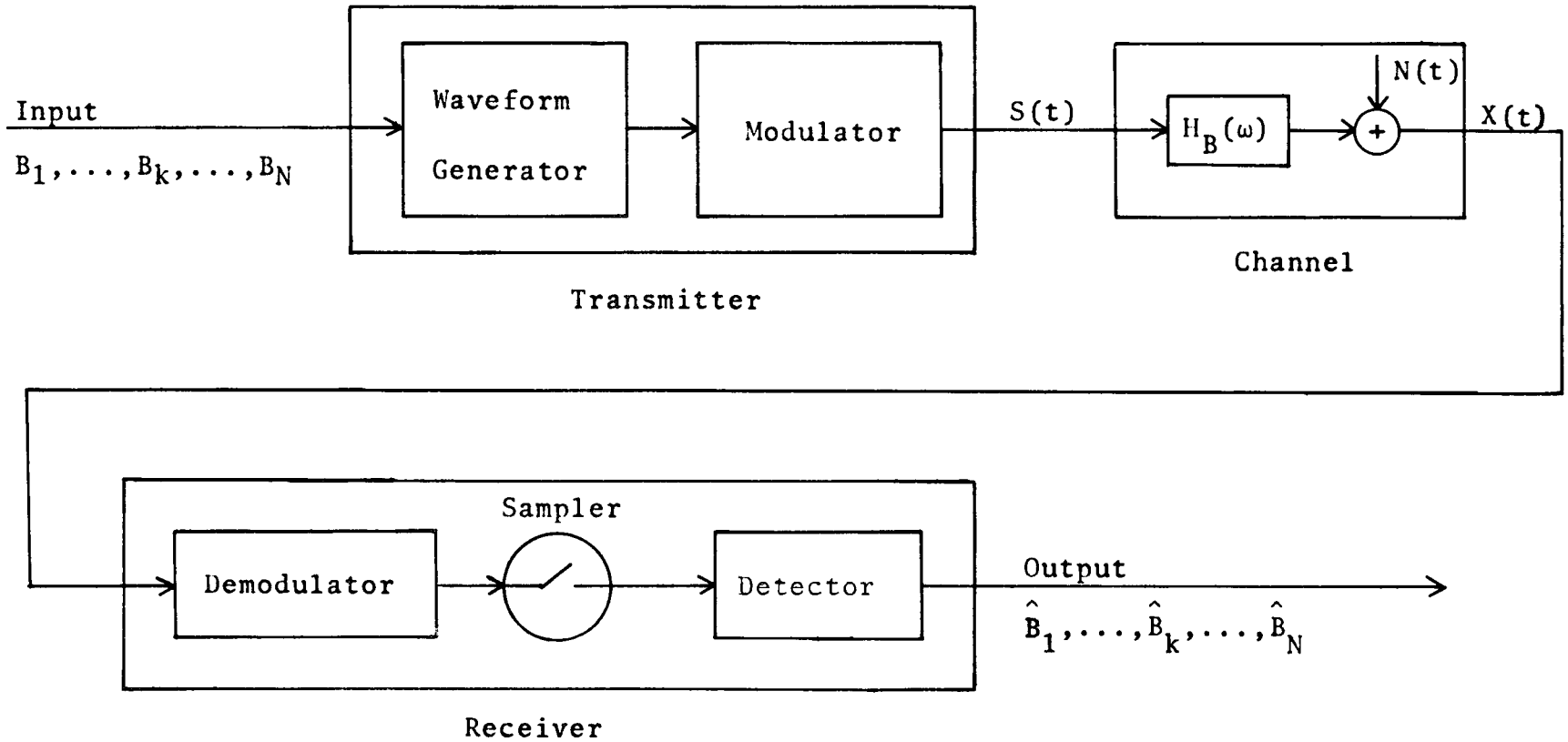

Bandpass communication system model

Fig. 4

estimates, $\hat{B}_1,\ldots,\hat{B}_N$, of the values of $B_1,\ldots,B_N$.

It is desirable to consider communication over an equivalent low pass system. To do this the modulator, demodulator, and actual channel are incorporated into an equivalent low pass channel and a low pass equivalent of $S_k(t-kT)$ is generated by the waveform generator. This situation is shown in Fig. 5. The equivalent signal, $S_{eq}(t)$, generated by the low pass system can be specified in terms of the actual transmitted signal, $S(t)$. The transformation is given by

$$S_{eq}(t) = S^{+}(t)\ e^{-j2\pi f_o t}$$

and $$S(t) = \mathrm{Re}\left[S_{eq}(t)\ e^{j2\pi f_o t}\right]$$

where $S^{+}(t)$ is the analytic signal having as its spectrum double the positive frequency spectrum of $S(t)$ and f_o is the carrier frequency of the actual communication system. $S_{eq}(t)$ is in general a complex signal. For DSB-AM, however, $S_{eq}(t)$ is real. For VSG-AM, SSB-AM, frequency shift keying (FSK) and phase shift keying (PSK), $S_{eq}(t)$ is complex valued.

The equivalent waveform generator of Fig. 5 may be considered to be an impulse generator, the output of which consists of impulses modulated by the input symbols, followed by a filter as shown in Fig. 6. The communication system of Fig. 4 can thus be reduced to that shown in

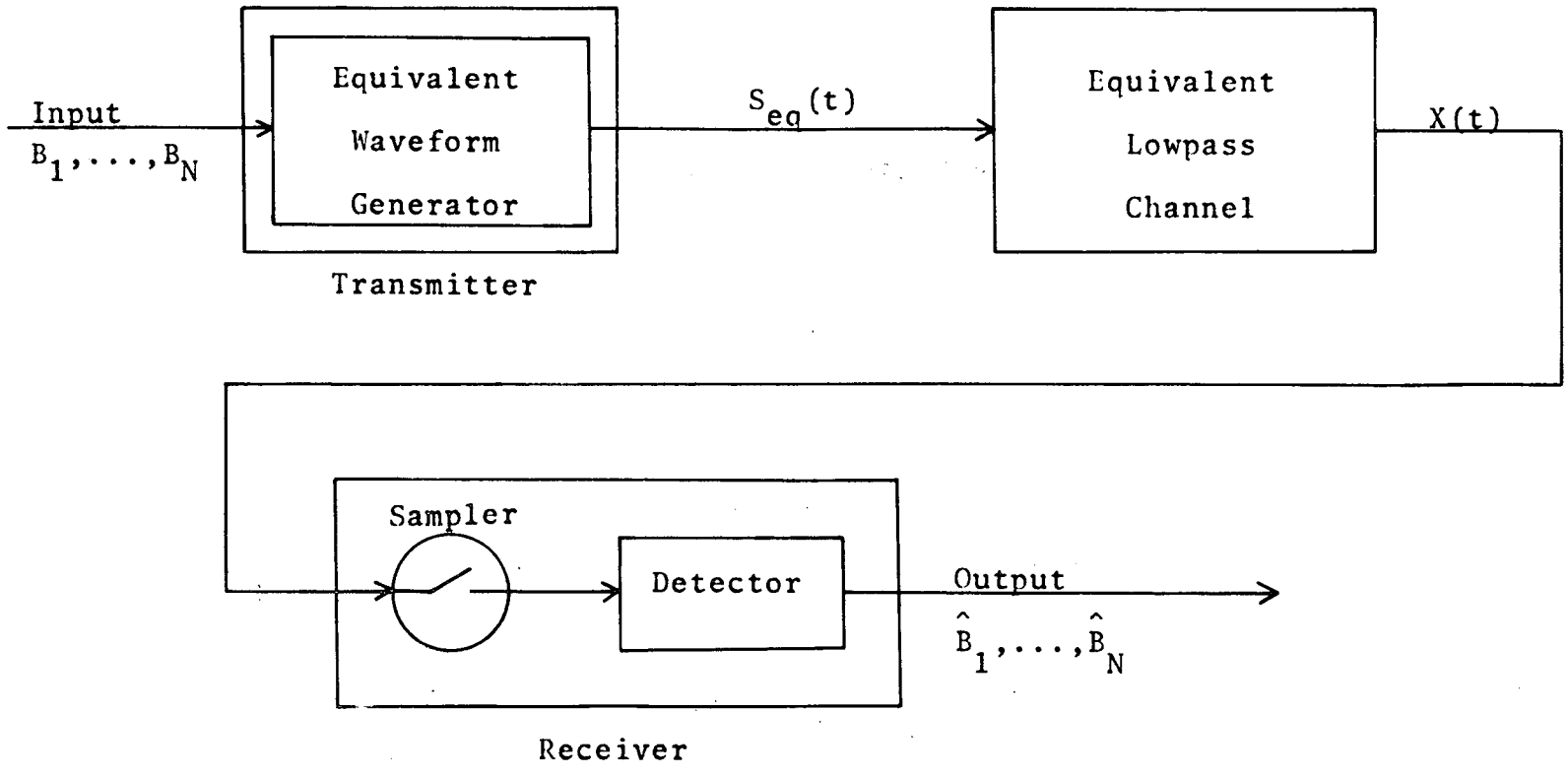

Equivalent lowpass communication system model

Fig. 5

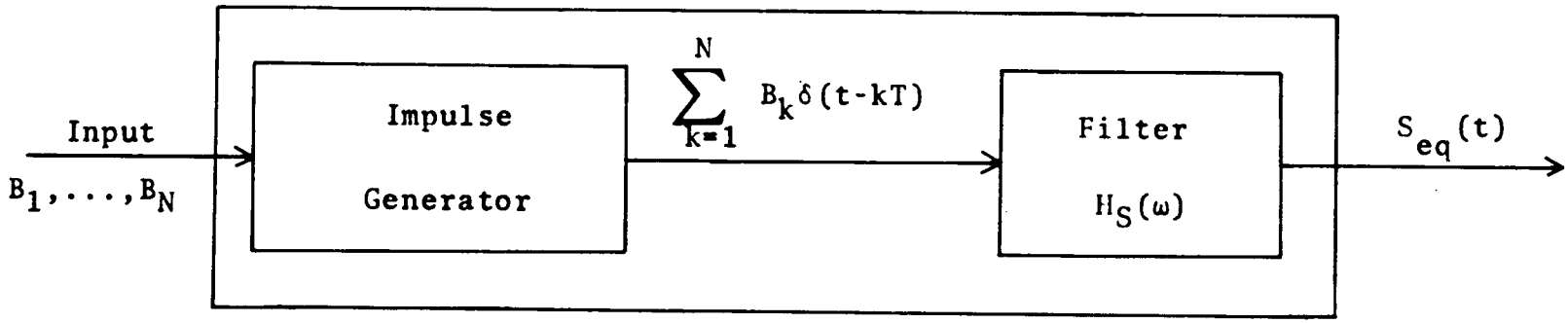

Equivalent waveform generator

Fig. 6

Fig. 7. Here $H(\omega)$ is the transfer function of the channel with corresponding impulse response $h(t)$. $H(\omega)$ and $h(t)$ are related by the following equations:

$$h(t) = \frac{1}{2\pi} \int_{-\infty}^{\infty} H(\omega/2\pi)\ e^{j\omega t}\ d\omega$$

$$H(\omega/2\pi) = \int_{-\infty}^{\infty} h(t)\ e^{-j\omega t}\ dt.$$

The system of Fig. 7 is the communication system model which will be used for this report.

For this paper it will be assumed that DSB-AM is used. This assumption is done for simplicity in the analysis of the problem. The assumption implies that $h(t)$ is real. Assumptions of SSB-AM, VSG-AM, PSK, or FSK would lead to a complex valued $h(t)$. It is expected that a complex valued $h(t)$ would lead, without too much difficulty, to results similar to those which will be presented. An indication of what would happen for a complex valued $h(t)$ is given in Sec. 8.2.

The assumption is also made that the channel impulse response is time invariant. This is not too prohibitive a restriction since a time variant channel can be approximated by a temporal succession of different channels. For instance, equally spaced sounding signals could be transmitted over a time variant channel. The purpose of the sounding signals would be to measure the channel

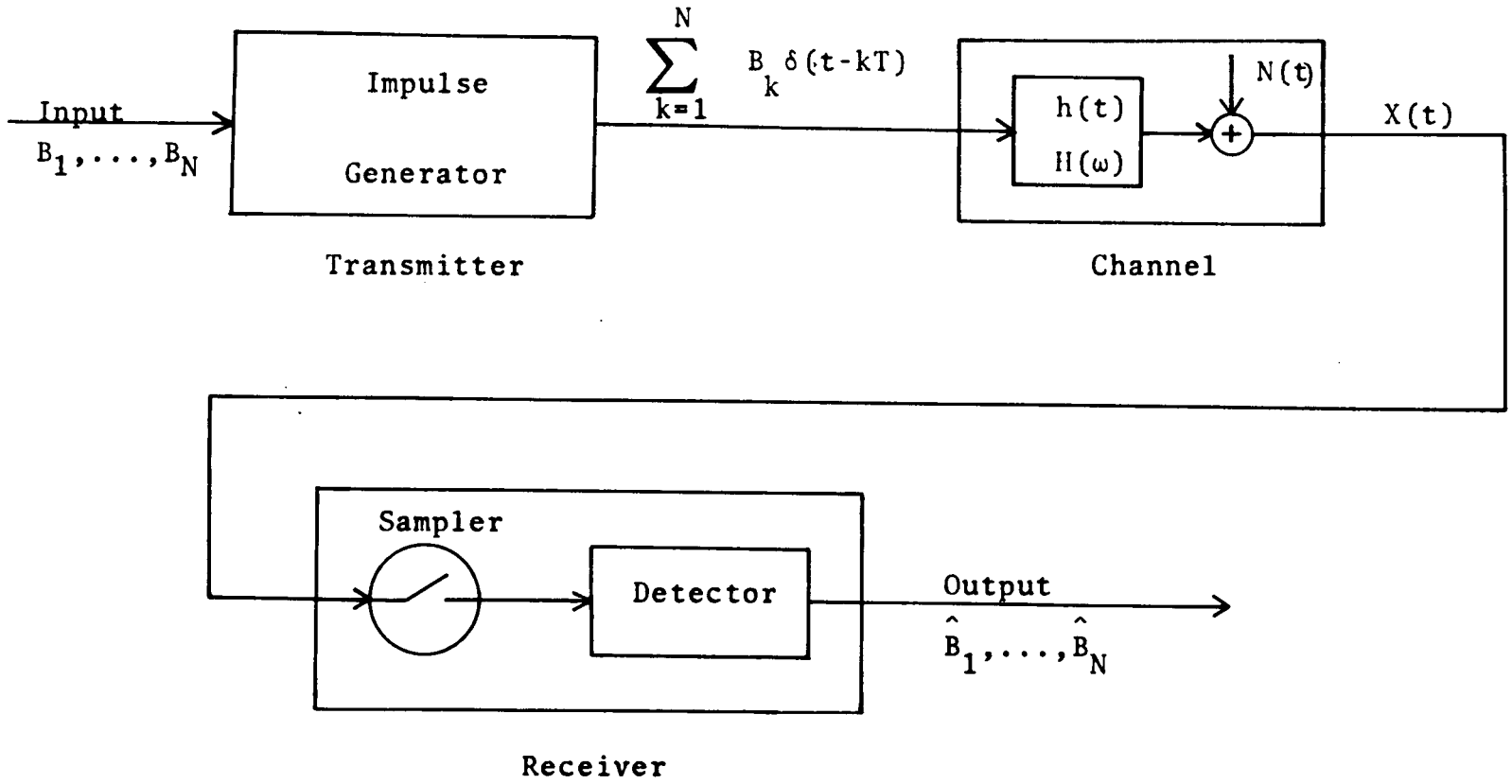

Model of communication system studied

Fig. 7

impulse response. Between sounding signals data could be transmitted. If the channel is not varying too rapidly the channel impulse response can be assumed constant between sounding signals. Between sampling times the model of Fig. 7 would then be applicable with the channel represented by a time invariant h(t). h(t) would be allowed to change immediately following the reception of the sounding signal. Slowly time varying channels can then be approximated by a series of different time invariant channels and the above assumption is thus not prohibitive. Moreover, it will lead to ease of analysis.

In Fig. 7, let the output of the impulse generator be denoted by B(t). Thus,

$$B(t) = \sum_{k=1}^{N} B_k \delta(t-kT). \tag{1}$$

B(t) is thus a random process. This assumes that the first symbol is transmitted at t = T. Using the convolution theorem

$$R(t) = \int_{-\infty}^{\infty} B(t)\ h(t-\tau)\ d\tau$$

$$= \sum_{k=1}^{N} \int_{-\infty}^{\infty} B_k \delta(t-kT)\ h(t-\tau)\ d\tau\ ; \tag{2}$$

$$R(t) = \sum_{k=1}^{N} B_k\ h(t-kT)\ . \tag{3}$$

Since $X(t) = R(t) + N(t)$

$$X(t) = \sum_{k=1}^{N} B_k \, h(t-kT) + N(t) . \tag{4}$$

The sampled output can be given as follows: define $h_i = h[(i-1)T+T']$, $X_i = X(iT + T')$ and $N_i = N(iT + T')$ where $0 \leq T' < T$. T' is a pure delay time in sampling $X(t)$. Note for different values of T', the h_i may be drastically different. A heuristic way of specifying the h_i is to choose T' so that h_i equals the maximum of the absolute value of $h(t)$ for some i. Throughout the report the assumption is made that only L symbols interfere at the output. This assumption means that

$$h_i = 0 . \; i < 1, \; i > L. \tag{5}$$

Using (5) in (4), the following is obtained

$$X_k = h_1 B_k + h_2 B_{k-1} + \ldots + h_L B_{k-L+1} + N_k \; . \tag{6}$$

Since the noise, $N(t)$, is a normal random process which is assumed uncorrelated at the sampling instants, the N_k, $k = 1, \ldots, N+L-1$ are normally distributed random variables.

The problem which is dealt with in this study is the problem of determining the correct processing of

X_k, $k = 1, \ldots, N+L-1$ so that the "best" estimate of the input sequence, $B_1, \ldots, B_N$, can be determined. This means that the optimum detector structure as specified from decision theory must be studied. The following are assumptions which will be employed in studying the detector process.

i. h(t) is known—it is either known a priori or obtained through measurements of the channel

ii. the sampling operation performed in the detector is perfectly synchronous.

iii. the a priori probability of a symbol = 1/m (equally likely inputs).

iv. noise samples are uncorrelated and are normally distributed with mean 0 and variance σ^2.

Note throughout this report that a random variable X, is normally distributed will be noted as $X \sim N(\mu,\sigma^2)$ where μ is the mean and σ^2 the variance of the distribution. Thus iv. means that $N_k \sim N(0,\sigma^2)$, $k = 1,\ldots, N+L-1$.

With these assumptions and the results of decision theory the optimum detector structure for the communication system of Fig. 7 can be specified. The detector is studied with a view towards finding the decision regions and specifying or approximating the probability of error. This

is done for both one-shot and multi-shot transmission of data. Prior to this study, however, several methods which have been used to combat intersymbol interference will be examined briefly in Chapter 3.

Chapter 3

COMBATING INTERSYMBOL INTERFERENCE

3.1 WAVEFORM SHAPING

Before reviewing decision theory and studying its application to intersymbol interference channels, it will perhaps be interesting and useful to study non-decision theory oriented approaches which have been taken in an attempt to combat intersymbol interference. One approach that is taken by Gerst and Diamond [5], is input waveform shaping. They choose $s_i(t-kT)$ (see Sec. 2.2) so that it is zero for $t < kT$ and $t \geq (k+1)T$. In addition, the form of $s_i(t-kT)$ is chosen so that the output due to the kth input is zero for $t < kT$ and $t \geq (k+1)T$. Thus transmitting at a rate of one symbol every T seconds there would be no intersymbol interference in the system. Gerst and Diamond state that such a $s_i(t-kT)$ can be found if the system is a general lumped-parameter system or a general finite RC transmission line. A difficulty with this approach is that, for implementation, a knowledge of the impulse response is necessary at the transmitter. In many cases, the impulse response is unknown at the transmitter. In this case, input waveform shaping would be impracticable to use. Furthermore, the use of input waveform shaping

increases the bandwidth requirement of the system. This is often undesirable.

3.2 TRANSVERSAL EQUALIZERS

Probably the method that is currently most commonly used in an effort to combat intersymbol interference is that which employs transversal equalizers. As shown in Fig. 8, a transversal equalizer consists of a properly terminated tapped delay line (TDL) or its digital equivalent with M taps. Each tap output is weighted by the corresponding tap gain $\hat{c}_i$, $i = \pm 0, \ldots, \pm\frac{M-1}{2}$. The weighted tap outputs are then summed to give the transversal equalizer output.

Note when the transversal equalizer is connected in tandem with a communication system with impulse response h(t), the impulse response of the tandem system is given by e(t) with

$$e(t) = \sum_{i=\frac{-M+1}{2}}^{\frac{M-1}{2}} \hat{c}_i \; h(t-iT+\tau_D) \tag{7}$$

where τ_D is the value of t at the peak of h(t).
Define $e_n = e(nT)$. Then the sampled impulse response of the tandem system is given by

$$e_n = \sum_{i=\frac{-M+1}{2}}^{\frac{M-1}{2}} \hat{c}_i \; h((n-i)T+\tau_D). \tag{8}$$

The equalizer is usually designed so that the value of e_o is large compared to the other sampled values of e(t).

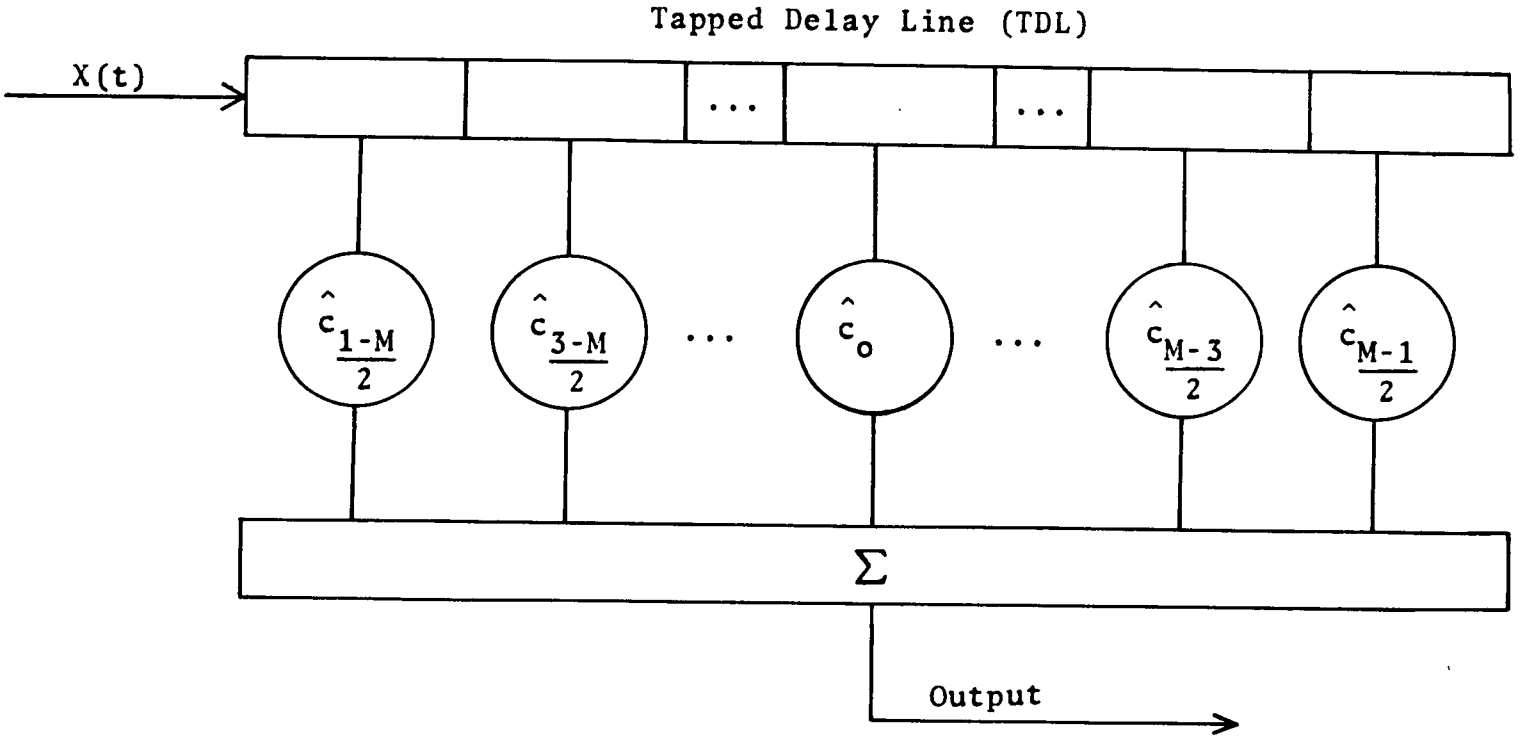

Schematic of transversal equalizer

Fig. 8

For best performance the equalizer makes a decision on an input B_k when the value of B_k has the greatest effect on the output of the equalizer. Denote this output as $(e_{out})_k$. Then since $e_o >> e_i$, $i \neq 0$,

$$(e_{out})_k = \sum_{n=-\infty}^{\infty} e_n B_{k-n}$$
$$= \sum_{n=-\infty}^{\infty} \sum_{i=\frac{-M+1}{2}}^{\frac{M-1}{2}} \hat{c}_i \, h((n-i)T + \tau_D) \, B_{k-n}. \quad (9)$$

This sampled output of the tandem communication system, $(e_{out})_k$, is put into a quantizer. The decision as to the value of B_k is then made based on the quantization of $(e_{out})_k$.

The tap gains, $\hat{c}_i$, are determined by solving a set of simultaneous linear equations. There are many different versions of transversal equalizers which are employed. They differ in the criterion used to arrive at the simultaneous equations for the tap gains and the method of solution of these equations. Define

$$D_\alpha = \frac{1}{e_o^2} \sum_{\substack{j=\frac{-M+1}{2} \\ j \neq 0}}^{\frac{M-1}{2}} e_j^2 \quad \text{and} \quad D_\beta = \frac{1}{|e_o|} \sum_{\substack{j=\frac{-M+1}{2} \\ j \neq 0}}^{\frac{M-1}{2}} |e_j| \; .$$

There are then three different criteria which are commonly used to arrive at the values for the tap gains. These are

- minimization of D_α [3, 12] (this does not take the noise into account)
- minimization of D_β [3, 12-14] (this also does not take the noise samples into account)
- minimization of mean-square error due to both intersymbol interference and noise [3, 15, 16].

These three criteria are used in arriving at the linear simultaneous equations which are solved for the tap gain values. These equations can be solved using matrix algebra or with the use of iterative techniques. There are three basic iterative techniques which are used. One technique uses a fixed-increment adjustment to the tap gains. The sign of the increment depends on whether the tap gain value is above or below the optimum value. Another procedure uses two increment sizes. A large increment is applied to a tap gain if the tap gain value is very much in error and a small increment if the tap gain value is close to the optimum value. A third iterative technique is based on a steepest descent approach and uses an increment size which is proportional to the gradient of the mean-square-error-surface for each particular tap.

The iterative techniques can be applied prior to data transmission by transmitting test signals before the data signals. Alternatively, the iterative techniques can be applied during data transmission by transmitting a test

signal periodically or by using the data signals themselves to adjust the tap gains.

A transversal equalizer which makes use of decisions made on previous inputs in deciding on the value of the present input has been developed by Austin [12]. In deciding on the value of B_k his "decision-feedback equalizer" uses a quantized feedback procedure in order to subtract from the received signal all the effects of symbols $B_1,\ldots,B_{k-1}$. The decisions on $B_1,\ldots,B_{k-1}$ have previously been made. In applying this detection procedure it is assumed that all previous decisions are correct. In addition, Austin's equalizer uses a criterion which minimizes the mean-square error due both to intersymbol interference and noise which, in theory, minimizes the effects of $B_{k+1},\ldots,B_N$ on the decision process.

The reader is referred to the above cited references for a discussion of the performances of the various transversal equalizers described. The transversal equalizer implements a linear procedure in making a decision on an input. The optimum solution, as described in Chapter 4, has a non-linear structure. Thus the transversal equalizer, although it performs very well for some impulse responses, restricts the receiver structure to be linear when in fact the optimum solution is non-linear.

Chapter 4

APPLICATION OF DECISION THEORY TO INTERSYMBOL INTERFERENCE

4.1 DECISION THEORY

In order to determine the structure of the best receiver, use must be made of the results of decision theory. Basically, decision theory is a means whereby an object or quantity is classified as belonging to one of several classes. This classification is dependent on the values of measurements which are made on the object or quantity. For instance, consider the mass production of some electronic device. Some devices are defective and some are non-defective. Suppose it is known that the input resistance of defective devices is normally distributed with a mean of 100K ohms and that the input resistance of non-defective devices is normally distributed with a mean of 200K ohms. Assume further that the variances of the distributions are known. Decision theory tells one whether to classify a device as defective or non-defective based on the measurement of the input resistance of the device. Associated with each decision about the class to which the device belongs is a probability of error. This probability of error is also determined from the results of decision theory.

Decision theory can be split into three parts—simple, compound, and sequential compound. A brief review of these three parts of decision theory is presented prior to applying decision theory to noisy intersymbol interference channels. The following definitions are used:

$X_k = (X_{1k}, \ldots, X_{nk})$ - a vector random variable corresponding to the measurements made on the kth object;

$x_k = (x_{1k}, \ldots, x_{nk})$ - the measured values of X_k;

S = set of all possible values which X_k may assume;

i = class or state of nature to which the unknown belongs;

$\Omega = \{i \mid i = 1,\ldots,r\}$ i.e. Ω is the set of all possible classes in which the unknown may belong;

j = decision that is made on the unknown i.e. the class in which the unknown is said to belong;

$A = \{j \mid j = 1,\ldots,s\}$ i.e. A is the set of all possible decisions that can be made about the unknown;

L_{ij} = loss incurred in classifying the unknown as belonging to class j when the state of nature is i;

$t(j|X)$ = probability of classifying the unknown in class j given the value of X that is observed. (t is called the "randomized decision function").

Note, usually $A = \Omega$ although this need not necessarily be so. If for all X, $t(j \mid X) = 1$ for some $j \varepsilon A$ and $t(j' \mid X) = 0$ for all other $j' \varepsilon A$ and $j' \neq j$, then $t(j \mid X)$ is a non-randomized decision function.

4.1.1 SIMPLE DECISION THEORY

In simple decision theory, there is one observation vector, X_1, and one object about which a decision must be made. The r x s loss matrix $\{L_{ij}\}$ is assumed known. The object is to determine $t(j \mid X_1)$.

Define the "risk function", $R(i,t)$ as the expected loss incurred by using the decision rule $t(j \mid X_1)$ given that the object to be classified came from class i [20]. Then

$$R(i,t) = \sum_{j=1}^{s} \int_S L_{ij}\, t(j \mid X_1) p(X_1 \mid i)\, dX_1 \qquad (10)$$

where $p(X_1 \mid i)$ is the probability density function of the random variable X_1 given that the object actually came from class i. Define the a priori probability of the class being i as q_i. Note, $\sum_{i=1}^{r} q_i = 1$. The average or Bayes risk is then

$$\bar{R}(q,t) = \sum_{i=1}^{r} R(i,t) q_i$$

$$= \int_S \sum_{j=1}^{s} \sum_{i=1}^{r} q_i L_{ij} t(j \mid X_1) p(X_1 \mid i) dX_1 . \qquad (11)$$

As a criterion of classification a $t(j \mid X_1)$ is chosen so that the Bayes risk is minimized. For the usual case of

a non-randomized decision rule, minimizing the Bayes risk is equivalent to minimizing $\sum_{i=1}^{r} L_{ij} p(X_1 \mid i) q_i$. A commonly treated situation is that in which $L_{ij} = 1 - \delta_{ij}$. In this case the minimization of the Bayes risk is achieved by setting j equal to that i for which $p(X_1 \mid i) q_i$ is maximized.

If the statistical characteristics of X_1 and the a priori probabilities are known the optimal procedure can be implemented. If the a priori probabilities are not known, a scheme for classification can be based on minimizing the maximum Bayes risk [20]. This procedure is called a "minimax procedure".

4.1.2 COMPOUND DECISION THEORY

In contrast to simple decision theory in which, based on the value of a vector random variable, a decision about one unknown is made, compound decision theory makes a decision about N unknowns based on N random vector variables.

Let $\underline{\Theta}_k = (\Theta_1,\ldots,\Theta_k)$ be a random vector which consists of the first k unknowns. Also let $\underline{X}_k$ be a vector composed of the first k X_i, i.e. $\underline{X}_k = (X_1,\ldots,X_k)$. The value of $\underline{X}_k$ is denoted by $\underline{x}_k = (x_1,\ldots,x_k)$. The results of compound decision theory are predicated on the assumption that given Θ_i, the probability density function of X_i is independent of the other X_j's and other Θ_j's. That is

$$p(X_i \mid \underline{X}_{i-1}, X_{i+1},\ldots,X_N,\underline{\Theta}_N) = p(X_i \mid \Theta_i). \qquad (12)$$

The Θ_i need not be independent. A compound decision rule is given as $\underline{t}_N = (t_1,\ldots,t_N)$ where $t_k = t_k(j \mid \underline{X}_N)$ is defined, in a manner analogous to the definition of $t(j \mid X_1)$ in Sec. 4.1, as the probability of deciding $\Theta_k = j$ given the value of $\underline{X}_N$ that is observed. In a manner analogous to that of simple decision theory define the "ith component risk function", $R(\underline{\Theta}_N, t_i)$, as the expected loss incurred on the ith decision by using the

decision rule $t_i(j \mid \underline{X}_N)$

$$R(\underline{\Theta}_N, t_i) = \int_{S^N} \sum_{j=1}^{s} L_{\theta_i j}\ t_i(j|\underline{X}_N)\ p(\underline{X}_N|\underline{\Theta}_N)\ dX_1 \ldots dX_N$$

where S^N, the N-fold cartesian product of S, is the range of $\underline{X}_N$. The compound risk, $R(\underline{\Theta}_N, \underline{t}_N)$, is then defined as the average of the component risks

$$R(\underline{\Theta}_N, \underline{t}_N) = 1/N \sum_{i=1}^{N} R(\underline{\Theta}_N, t_i)$$

$$R(\underline{\Theta}_N, \underline{t}_N) = 1/N \int_{S^N} \sum_{j=1}^{s} \sum_{i=1}^{N} L_{\theta_i j}\ t_i(j|\underline{X}_N)\ p(\underline{X}_N|\underline{\Theta}_N)\ dX_1 \ldots dX_N .$$

Let $G(\underline{\Theta}_N)$ be an a priori probability distribution of $\underline{\Theta}_N$ over the domain Ω^N (Ω^N is the N-fold cartesian product of Ω). The compound Bayes risk is then given [20] as the average of the compound risk as follows:

$$\overline{R}(G, \underline{t}_N) = \sum_{\underline{\Theta}_N \varepsilon\ \Omega^N} R(\underline{\Theta}_N, \underline{t}_N) G(\underline{\Theta}_N)$$

$$= 1/N \sum_{\underline{\Theta}_N \varepsilon\ \Omega^N} \sum_{i=1}^{N} \int_{S^N} \sum_{j=1}^{s} L_{\theta_i j}\ t_i(j|\underline{X}_N) p(\underline{X}_N|\underline{\Theta}_N) G(\underline{\Theta}_N) dX^N$$

$$= 1/N \sum_{i=1}^{N} \overline{R}(G, t_i)$$

where

$$\overline{R}(G, t_i) = \sum_{\underline{\Theta}_N \varepsilon\ \Omega^N} R(\underline{\Theta}_N, t_i) G(\underline{\Theta}_N).$$

The criterion for making an optimum decision is to minimize

the Bayes risk. This is equivalent to choosing $\underline{t}_N$ so that $\bar{R}(G,t_i)$ is minimized for every i. Denote the $\underline{t}_N$ which minimizes $\bar{R}(G,\underline{t}_N)$ as $\underline{t}_N^G$. $\underline{t}_N^G$ is called the "compound Bayes procedure".

For the common case of a non-randomized decision rule the criterion is equivalent to setting $t_i(j|\underline{X}_N) = 1$ for that j for which

$$\sum_{\underline{\Theta}_N} L_{\theta_i j}\ p(\underline{X}_N|\underline{\Theta}_N)G(\underline{\Theta}_N) = \sum_{\Theta_i} L_{\theta_i j}\ P(\underline{X}_N,\Theta_i). \tag{13}$$

is a minimum. For the special but common case of $A = \Omega$ and $L_{\theta_i j} = 1-\delta_{ij}$, the minimization of (13) reduces to the maximization of $p(\underline{X}_N|\Theta_i)P(\Theta_i)$. Note if the Θ_i are independent, the minimization of (13) reduces to maximizing $p(X_i|\Theta_i)P(\Theta_i)$.

Abend [20] states that compound decision theory is necessary if the states of nature are not independent or if the a priori probabilities are not known. For the purposes of this study it is assumed that the a priori probabilities are known. In this study compound decision theory will be employed in those cases in which the states of nature are not independent.

In Sec. 4.2.1 application of the above results are made to intersymbol interference channels. Before doing so a special case of compound decision theory—sequential compound decision theory—will be studied.

4.1.3 SEQUENTIAL COMPOUND DECISION THEORY

In compound decision theory, a scheme, which was based on all observed values, for making decisions was derived. In some cases all N observations are not available when a decision about some Θ_k must be made. If only the first k observations, $\underline{X}_k$, are available when the decision is made on the kth unknown, Θ_k, the results of sequential compound decision theory apply. The decision rule is called a "sequential compound decision rule".

To obtain this sequential compound decision rule one proceeds in a manner analogous to that of the compound case. The assumption is again made that given Θ_k, X_k is independent of the other X_i's and Θ_i's, i.e.

$$p(X_k|\underline{X}_{k-1},X_{k+1},\ldots,X_N,\underline{\Theta}_N) = p(X_K|\theta_k). \tag{14}$$

Using the notation of Sec. 4.1.2 the Bayes risk is given [20] by $\overline{R}(G,\underline{t}_N)= \frac{1}{N} \sum_{k=1}^{N} \overline{R}(G,t_k)$ where

$$\overline{R}(G,t_k) = \sum_{\underline{\Theta}_k \varepsilon \Omega^k} \int_{S^k} L_{\theta_k j}\ t_k(j|\underline{X}_k)p(\underline{X}_k|\underline{\Theta}_k)G(\underline{\Theta}_k)dX^k \tag{15}$$

For optimality the decision rule is chosen to minimize the Bayes risk. This is equivalent to minimizing, for every k, $\overline{R}(G,t_k)$. As before, for a non-randomized decision rule,

this is equivalent to setting $t_k(j \mid \underline{X}_k) = 1$ for that j which minimizes

$$\sum_{\underline{\Theta}_k} L_{\Theta_k j}\, p(\underline{X}_k \mid \underline{\Theta}_k) G(\underline{\Theta}_k) = \sum_{\Theta_k} L_{\Theta_k j} P(\underline{X}_k, \Theta_k) \ . \qquad (16)$$

In Sec. 4.3 this optimization criterion is applied to the intersymbol interference channel to obtain a decision rule.

4.2 APPLICATION OF DECISION THEORY

For the one-shot transmission of N symbols, the optimum receiver can be given. Let the sequence $(B_1,\ldots,B_N)$ be denoted by the random variable π. Let π_i be one of the m^N possible sequences which π can assume. $\underline{X}_N$ is the set of measurements. X_k is given as in eq. (6). Then based on $\underline{X}_N$ a decision is required about π. Simple decision theory is applicable. Thus from Sec. 4.1.1 π is chosen equal to π_j for that π_j for which

$$Q = \sum_{\pi_i} L_{\pi_i \pi_j} \, p(\underline{X}_N | \pi = \pi_i) G(\pi = \pi_i) \tag{17}$$

is minimized; here $G(\pi = \pi_i)$ is the a priori probability associated with π. For $L_{\pi_i \pi_j} = 1-\delta_{\pi_i \pi_j}$, this reduces to —choose $\pi = \pi_j$ for that π_j for which $p(\underline{X}_N | \pi = \pi_j) G(\pi = \pi_j)$ or $P(\pi = \pi_j | \underline{X}_N)$ is maximized, i.e. π is chosen equal to π_j if $P(\pi = \pi_j | \underline{X}_N) \geq P(\pi = \pi_{j'} | \underline{X}_N)$ for all $j' \neq j$. This rule could be implemented to make a decision about the value of the inputs. The rule provides for the minimization of the probability of making an error in the message. It is the optimum rule if the minimization of message error is used as a standard of optimality. There is a drawback to this procedure. As N increases the number

of different π_j increases as m^N. Thus for N large the number of calculations necessary to implement this procedure would be prohibitively large and the process would be impractical. An approximation to this rule will be examined in Sec. 4.2.1.

4.2.1 CHANG AND HANCOCK DETECTOR

As noted above the optimum detector of Sec. 4.2 is impractical to implement due to the complexity of implementation growing as m^N. By turning to compound decision theory and a different loss function Chang and Hancock [18] find a less complex detection scheme which can be implemented. They define

$$\Theta_k = A_k = B_k + B_{k-1}m + \ldots + B_{k-L+2}m^{L-2} + B_{k-L+1}\, m^{L-1}. \quad (18)$$

A decision is made as to the value of the states, Θ_i, $i = 1,\ldots,N$. From this decision about the Θ_i's, they determine the values of the transmitted symbols, $\underline{B}_N$. The detector that Chang and Hancock seek is optimal from the viewpoint of minimization of the probability of making an error in the estimation of a state, Θ_j.

From (6) it can be seen that X_k depends only on $B_k,\ldots,B_{k-L+1}$ and a noise term*. Hence eq. (12) is satisfied and the application of compound decision theory is justified. The states of nature are not independent and hence compound decision theory is necessary. Assuming

---

*As noted previously the noise terms are assumed to be uncorrelated zero-mean normal random variables.

equal a priori probabilities and letting $L_{\Theta_i\Theta_j} = 1-\delta_{ij}$ the optimum solution is to set $\Theta_k = j$ for that j for which $p(\underline{X}_N|\Theta_k = j)$ or equivalently $P(\Theta_k = j|\underline{X}_N)$ is maximized. This loss function insures that the probability of making an error in the decision about the value of the state is minimized. Since $p(\underline{X}_N)$ is independent of the value of Θ_k, the rule may be expressed as—set $\Theta_k = j$ for that j for which

$$P(\Theta_k = j|\underline{X}_N)p(\underline{X}_N) \tag{19}$$

is maximized.

This is the decision rule which Chang and Hancock use. They have developed a method whereby (19) is calculated sequentially. The degree of complexity of the detector thus increases only linearly with N. As noted in Sec. 4.2 the complexity of the detector obtained using simple decision theory increases as m^N. Furthermore, Chang and Hancock note that if π_T is the true state of nature and if $P(\pi = \pi_T|\underline{X}_N) > \frac{1}{2}$, then their detector is equivalent to the optimum detector of Sec. 4.2.

This detector implementation has several drawbacks. Because Θ_i is not independent of Θ_{i-1} not all possible sequences of Θ_i, $i = 1,\ldots,N$ are realizable. In the case of an error made in the decision about the value of Θ_i an improper sequence of Θ's may occur. This sequence would

not yield a unique determination of the input signals B_i, $i = 1,\ldots,N$. If this non-unique determination of the B_i is over J adjacent symbols, $B_\alpha,\ldots,B_{\alpha+J-1}$, Chang and Hancock suggest that a maximum likelihood decision be made on the J symbols. Thus, let the sequence $B_\alpha,\ldots,B_{\alpha+J-1}$ be denoted by π^J and let π_i^J be one of the m^J possible values for the sequence $B_\alpha,\ldots,B_{\alpha+J-1}$. Then as in Sec. 4.2, the maximum likelihood procedure is to set $\pi^J = \pi_j^J$ for that π_j^J for which $P(\pi^J = \pi_j^J \mid \underline{X}_N)$ is a maximum.

A second drawback to the Chang and Hancock procedure is that the information must be transmitted in blocks of N m-ary digits with adequate guard space between adjacent blocks. This means that if N is large, one must wait a long time after the initiation of the transmission to receive all the outputs and start classifying the inputs. The reception of the first part of the message is not possible until all of the message has been received. If N is small this is not a very big problem; however, the effective rate of transmission is then very much reduced from one digit every T seconds.

4.2.2 MINIMIZATION OF THE EXPECTED NUMBER OF ERRORS

It has been pointed out [21, 22] that the optimum receiver, as derived from decision theory can be expressed in a manner other than that given in Sec. 4.2. Using the notation of Sec. 4.2, decision theory says to minimize

$$Q = \sum_{\pi_i} L_{\pi_i \pi_j} \; P(\pi = \pi_i | \underline{X}_N)$$

and set j equal to that value for which Q is a minimum. Instead of defining a loss function as per Chang and Hancock (Sec. 4.2.1) define [21]

$$L_{\pi_i \pi_j} = \sum_{\alpha=1}^{N} L(B_{\alpha\zeta}, B_{\alpha\xi}).$$

$L(B_{\alpha\zeta}, B_{\alpha\xi})$ is the loss incurred by saying $B_\alpha = b_\xi$, $\xi = 1,\ldots,m$ when, in fact, $B_\alpha = b_\zeta$, $\zeta = 1,\ldots,m$.

Furthermore, let $L(B_{\alpha\zeta}, B_{\alpha\xi}) = 1-\delta_{\zeta\xi}$. This choice of a loss function is equivalent to minimizing the risk associated with classifying each input symbol, i.e. it minimizes the expected number of errors. Using this loss function

$$Q = \sum_{\alpha=1}^{N} \sum_{i=1}^{m^N} L(B_{\alpha\zeta}, B_{\alpha\xi}) P(\pi = \pi_i | \underline{X}_N) , \tag{20}$$

$$Q = \sum_{\alpha=1}^{N} \sum_{\zeta=1}^{m} L(B_{\alpha\zeta}, B_{\alpha\xi}) P(B_\alpha = b_\zeta | \underline{X}_N) \quad . \tag{21}$$

Q is minimized if for each α, B_α is set equal to that b_ζ for which $P(B_\alpha = b_\zeta | \underline{X}_N)$ is maximized. The optimum detector, for this loss function, then calculates $P(B_\alpha = b_\zeta | \underline{X}_N)$ and uses this statistic to make a decision. Since

$$P(B_\alpha = b_\zeta | \underline{X}_N) = \sum_{B_{\alpha-1}, \ldots, B_{\alpha-L+1}} \cdots \sum P(\Theta_\alpha | \underline{X}_N)$$

where Θ_α is given in (18), $p(B_\alpha = b_\zeta | \underline{X}_N)$ could be calculated in a sequential manner and the optimum detector implemented. Simulations of this procedure have not been published. It is important to note [22] that the detector based on this procedure is non-linear. Thus the transversal equalizer and matched filter techniques of Chapter 3, being linear, are sub-optimum.

4.3 SEQUENTIAL DETECTION

As noted in Sec. 4.2.1, a drawback to the Chang and Hancock procedure is that all of the signal must be received prior to making a decision on any input. This is also a drawback to the optimum rule of Sec. 4.2.2. In some cases it may be very important to make a decision about the inputs as the message is received. This involves a sequential procedure which will be derived below. The derivation will be analogous to the derivation for the rule of Sec. 4.2.2 [21]. This involves a sequential decision procedure and sequential compound decision theory is applicable.

Define $\Theta_k = B_1,\ldots,B_k$. Let Θ_{ki} be one of the m^k possible sequences which Θ_k can assume. With these definitions $p(X_j|X_1,\ldots,X_{j-1},X_{j+1},\ldots,X_k,\underline{\Theta}_k) = p(X_j|\Theta_j)$ and sequential compound decision theory is applicable. From Sec. 4.1.3 the quantity to be minimized is

$$Q = \sum_{\theta_{ki}} L_{\theta_{ki}\theta_{kj}} \, p(\underline{X}_k, \Theta_k = \Theta_{ki}). \tag{22}$$

Minimizing Q is the same as minimizing

$$Q' = \sum_{\theta_{ki}} L_{\theta_{ki}\theta_{kj}} \, P(\Theta_k = \Theta_{ki}|\underline{X}_N). \tag{23}$$

Define $L_{\theta_{ki}\theta_{kj}} = \sum_{\alpha=1}^{k} L(B_{\alpha\zeta}, B_{\alpha\xi})$ where $L(B_{\alpha\zeta}, B_{\alpha\xi})$ is defined as in Sec. 4.2.2. Then

$$Q' = \sum_{\alpha=1}^{k} \sum_{\theta_{ki}} L(B_{\alpha\zeta}, B_{\alpha\xi})\ P(\Theta_k = \Theta_{ki} | \underline{X}_N)$$

$$= \sum_{\alpha=1}^{k} \sum_{\zeta=1}^{m} L(B_{\alpha\zeta}, B_{\alpha\xi}) \sum_{B_1} \cdots \sum_{\substack{B_i \\ i \neq \alpha}} \cdots \sum_{B_k} P(B_1, \ldots, B_k | \underline{X}_k) .$$

And finally

$$Q' = \sum_{\alpha=1}^{k} \sum_{\zeta=1}^{m} L(B_{\alpha\zeta}, B_{\alpha\xi}) P(B_\alpha = b_\zeta | \underline{X}_k). \tag{24}$$

Letting $L(B_{\alpha\zeta}, B_{\alpha\xi}) = 1-\delta_{\zeta\xi}$, Q' is minimized if for each α, $P(B_\alpha = b_\zeta | \underline{X}_k)$ is maximized. The sequential compound rule then says set B_α equal to that b_ζ for which $P(B_\alpha = b_\zeta | \underline{X}_k)$ is maximized for all $\alpha = 1, \ldots, k$.

The rule states that, after receiving the kth measurement, a decision is made on B_k by maximizing $P(B_k = b_\zeta | \underline{X}_k)$. This sequential procedure will be denoted as a "backward-looking one-sided rule". This terminology is used because the classification of B_k depends only on the samples in the past as measured from time equal to kT—i.e. for $t \leq kT$. The samples used are those which appear only on one side of B_k. The application of the backward looking one-sided rule and the compound rule (Sec. 4.2.2) to noisy intersymbol interference channels will be investigated

with a view toward implementation of the procedure and the evaluation of the probability of error inherent in the procedure.

4.4 CRITERIA OF OPTIMALITY

The two optimum detectors of Sec. 4.2 and 4.2.2 are derived using two different loss functions. This results in two different implementations of an optimum decision procedure. The implementation of Sec. 4.2 minimizes the probability of making an error in the received message. The compound detector of Sec. 4.2.2 and the sequential detector of Sec. 4.3 is a realization of a decision procedure which uses minimization of the expected number of errors as the optimality criterion.

Which optimum detector one uses is dependent on whether one wants to minimize the probability of making an error in the message or whether one wants to minimize the expected number of errors in the message. The latter is more commonly used in communication problems since, if redundant coding of the signal is carried out prior to transmission, a few errors in detection can occur and the message sequence can still be decoded and received correctly. Thus minimization of the expected number of errors is the criterion which is usually used in detection theory [23]; hence, the detection procedures of Sec. 4.2.2 and 4.3 will be evaluated while the detection procedure of Sec. 4.2 will not be evaluated.

Chapter 5

SEQUENTIAL DECISION RULE AND PROBABILITY OF ERROR

5.1 DECISION STATISTIC

In evaluating the decision rule, determining the decision region, and finding the probability of error, the assumptions given in Sec. 2.2 are used. In addition, the loss function associated with a decision is assumed to be the same as that given in Sec. 4.3.

The decision procedure sets $B_k = b_j$ for that b_j for which $P(B_k = b_j \mid \underline{X}_k)$ is maximized. Evaluating this expression one obtains

$$P(B_k \mid \underline{X}_k) = \frac{P(B_k, \underline{X}_k)}{p(\underline{X}_k)}$$

$$= \frac{P(B_k)p(\underline{X}_k \mid B_k)}{p(\underline{X}_k)}$$

$$= \frac{P(B_k)p(\underline{X}_{k-1} \mid B_k)p(X_k \mid \underline{X}_{k-1}, B_k)}{p(\underline{X}_k)} \quad .$$

Now $X_1, \ldots X_{k-1}$ are independent of B_k since B_k hasn't yet been transmitted when $\underline{X}_{k-1}$ is received.* Therefore

---

*See equation (6).

$$P(B_k \mid \underline{X}_k) = \frac{P(B_k)p(\underline{X}_{k-1})p(X_k \mid \underline{X}_{k-1}, B_k)}{p(\underline{X}_k)} .$$

The joint densities $p(\underline{X}_{k-1})$ and $p(\underline{X}_k)$ are independent of the value which B_k assumes. Also $P(B_k) = 1/m$. Thus

$$P(B_k \mid \underline{X}_k) = C\ p(X_k \mid \underline{X}_{k-1}, B_k)$$

where C is independent of the value of B_k. The decision procedure is equivalent to choosing $B_k = b_j$ for that b_j for which

$$p(X_k \mid \underline{X}_{k-1}, B_k = b_j) \geq p(X_k \mid \underline{X}_{k-1}, B_k = b_i) \qquad (25)$$

for all $i \neq j$. Note $p(X_k | \underline{X}_{k-1}, B_k)$ is a shorthand notation for representing

$$p(X_k = x_k \mid X_1 = x_1, \ldots, X_{k-1} = x_{k-1}, B_k = b_j).$$

This convention will be followed throughout the report.

5.2 CALCULATION OF DECISION STATISTIC

By using the expressions for $X_1,\ldots,X_k$ obtained through the use of equation (6), X_k can be expressed in a manner which renders the decision statistic, $p(X_k|\underline{X}_{k-1},B_k = b_j)$ calculable. The specification of this probability will now be considered. Equation (6) is rewritten below as

$$X_j = h_1B_j + h_2B_{j-1} +\ldots+ h_LB_{j-L+1} + N_j.$$

For the k components of $\underline{X}_k$, k equations can be written. This system of equations appears as follows:

$$X_k = h_1B_k + h_2B_{k-1} +\ldots+ h_LB_{k-L+1} + N_k \quad (26a)$$

$$X_{k-1} = h_1B_{k-1} + h_2B_{k-2} +\ldots+ h_LB_{k-L} + N_{k-1} \quad (26b)$$

$$X_{k-2} = h_1B_{k-2} + h_2B_{k-3} +\ldots+ h_LB_{k-L-1} + N_{k-2} \quad (26c)$$

$$\vdots$$

$$X_L = h_1B_L + h_2B_{L-1} +\ldots+ h_LB_1 + N_L \quad (26d)$$

$$\vdots$$

$$X_2 = h_1B_2 + h_2B_1 + N_2 \quad (26e)$$

$$X_1 = h_1B_1 + N_1 \quad (26f)$$

This system of k equations has k unknowns (the $\underline{B}_k$). From these equations X_k can be obtained as a function of B_k and

$\underline{X}_{k-1}$ as follows.* Solve for B_{k-1} in equation (26b) and substitute in (26a) to get

$$X_k = \text{fcn}(X_{k-1}, B_k, B_{k-2}, \ldots, B_{k-L}). \tag{27}$$

Then solve (26c) for B_{k-2} and substitute in (27) to get

$$X_k = \text{fcn}(X_{k-1}, X_{k-2}, B_k, B_{k-3}, \ldots, B_{k-L-1}). \tag{28}$$

Continuing this recursive substitution until all of the equations in (26) are used, one obtains

$$X_k = h_1 B_k - \sum_{i=1}^{k-1} d_i X_i + \sum_{i=1}^{k} d_i N_i \tag{29}$$

where the d_i can be determined by solving a difference equation which is discussed in Sec. 5.5. For a given output $\underline{x}_{k-1}$, let $-\sum_{i=1}^{k-1} d_i x_i = C_1$. Since the noise samples are uncorrelated and $N_i \sim N(0,\sigma^2)$, $\sum_{i=1}^{k} d_i N_i \sim N(0, v^2\sigma^2)$ where $v^2 = \sum_{i=1}^{k} d_i^2$. Hence given that the value of $\underline{X}_{k-1}$ is $\underline{x}_{k-1}$ and that the value of B_k is b_j

$$X_k \sim N(h_1 b_j + C_1, v^2\sigma^2). \tag{30}$$

---

*Here the noise terms are treated as though they are knowns, though they are of course not known.

Thus the conditional probability density function of X_k is known and the sequential decision procedure can be realized. This specification of the density allows the probability of error associated with the sequential compound decision procedure to be calculated. Prior to the study of this probability of error, the associated decision regions will be examined in Sec. 5.3.

5.3 DECISION REGION

The specification of the decision regions associated with the sequential compound decision procedure proceeds as follows. For each value of the variable B_k, a different normal distribution is obtained. For m-ary transmission let the values of B_k be

$$b_j = (-m + 2j - 1)A \tag{31}$$

where A can be specified in terms of the signal-to-noise ratio (SNR) and the h_i as

$$A = \frac{\sigma^2 SNR}{\sum_{i=1}^{L} h_i^2} \; . \tag{32}$$

There are thus m different density functions corresponding to the m different values of B_k which must be evaluated. The decision about which value of B_k was transmitted, resulting in the minimum number of expected errors, requires a comparison of these m different density functions. As indicated by equation (30) each density function has the same shape. Adjacent means are separated by a distance of $2Ah_1$. As an example, the probability densities for the case m = 4 are given in Fig. 9.

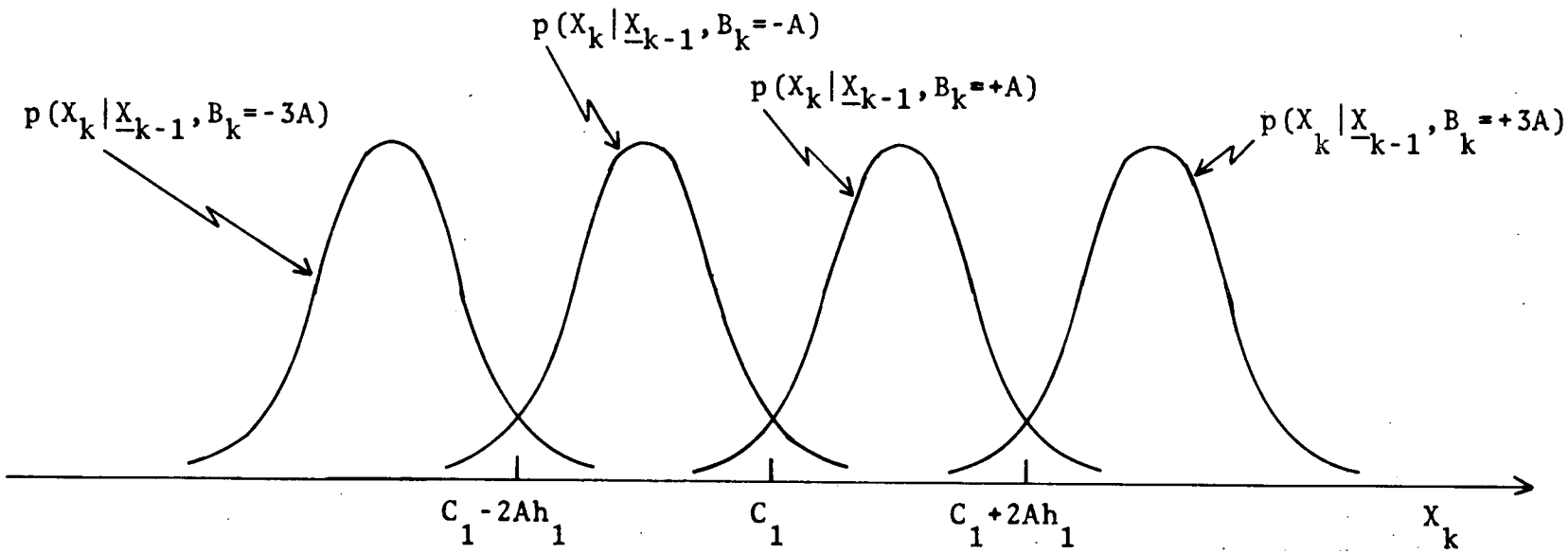

Decision regions for sequential procedure with m = 4

Fig. 9

As illustrated in Fig. 9, the sequential decision problem has been reduced to the classical one-dimensional m-state decision problem. Applying the decision criterion (25), the decision regions may be determined. If a received value of X_k falls in the decision region R_j, on the X_k axis, then B_k is classified as belonging to class j. For the situation illustrated the decision regions are

$$R_1: \quad X_k < (C_1 - 2Ah_1)$$

$$R_2: \quad (C_1 - 2Ah_1) \leq X_k < C_1$$

$$R_3: \quad C_1 \leq X_k < (C_1 + 2Ah_1)$$

$$R_4: \quad (C_1 + 2Ah_1) \leq X_k \ .$$

In general, since C_1 is a function of $\underline{X}_{k-1}$, the decision region is a function of $\underline{X}_{k-1}$. Note that the $\underline{X}_{k-1}$ are related through the d_i. Since the h_i are related to the d_i through a difference equation (Sec. 5.5), the effect of the impulse response on the decision regions is related to the effect that the d_i have on the decision regions. Consequently the relationship of the d_i to the h_i will be studied (Sec. 5.5 and 5.6).

5.4 PROBABILITY OF ERROR

Based on the decision regions that were obtained in Sec. 5.3, the probability of error (performance) of the sequential compound detector can be determined for the general case of m-ary transmission. This probability of error would be the same as that which is specified for the classical m-state decision problem. The probability of error takes on a simple form for equal a priori probabilities and m = 2. For this case, the probability densities are as shown in Fig. 10. If $x_k \geq C_2, B_k$ is classified as +A. B_k is classified as -A otherwise. The probability of error, $P(\varepsilon)$, is defined as

$$P(\varepsilon) = [1/2]P(B_k \text{ is classified as } +A|B_k \text{ actually equals } -A)$$

$$+ [1/2]P(B_k \text{ is classified as } -A|B_k \text{ actually equals } +A).$$

Due to the symmetry involved,

$$P(B_k \text{ is classified as } +A|B_k \text{ actually equals } -A)$$

$$= P(B_k \text{ is classified as } -A|B_k \text{ actually equals } +A).$$

Thus $P(\varepsilon) = P(B_k \text{ is classified as } +A|B_k \text{ actually equals } -A)$. Hence, from Fig. 10, after a change of variables $t = (X_k - C_2 + Ah_1)/v\sigma$, one obtains

$$P(\varepsilon) = 1/\sqrt{2\pi} \int_D^{\infty} e^{-t^2/2}\, dt \qquad (33)$$

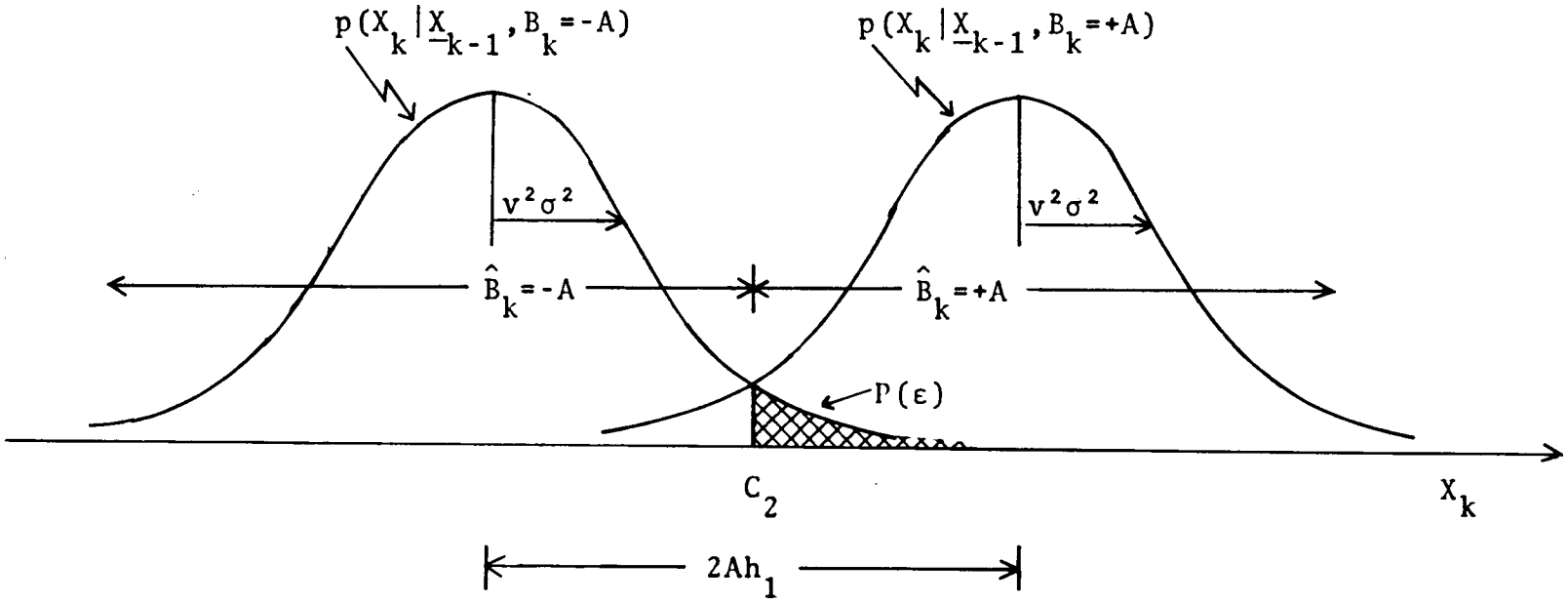

Decision region and probability of error for sequential decision procedure with m = 2

Fig. 10

where $D^2 = \left[h_1^{\,2}\ (\mathrm{SNR})\right] \Big/ \left[\left(\sum_{i=1}^{L} h_i^{\,2}\right)\right] v^2$.

Since $v^2 = \sum_{i=1}^{k} d_i^{\,2}$, the probability of error is dependent on how d_i behaves. In order to keep the probability of error of the classification within reasonable bounds, v^2 should not be too large. It is certainly not desired that v^2 tend to infinity as k tends to infinity. As will be shown in Sec. 5.5, the d_i depend on the value of the h_i and thus they depend on the impulse response of the channel. For N large, the use of the sequential procedure must be restricted to those impulse responses for which v^2 tends to limit C_3 as k tends to infinity.

It is noted here that the h_i's affect the performance of the sequential detector not only through v^2 but also through $\sum_{i=1}^{L} h_i^{\,2}$. To get excellent performance v^2 must be small and $\sum_{i=1}^{L} h_i^{\,2}$ must be close to $\left[\max_i |h_i|\right]^2$. The types of impulse responses for which the sequential detector will perform well are indicated in Sec. 5.6.

5.5 DIFFERENCE EQUATION

As stated in Sec. 5.2, the d_i are solutions of a difference equation. This difference equation results from the recursive substitutions that were necessary in order to find X_k as a function of $\underline{X}_{k-1}$ and B_k (See Appendix A). The difference equation is given below.

$$h_L d_i + h_{L-1} d_{i-1} + \cdots + h_1 d_{i-L+1} = 0 \ . \tag{34}$$

This equation is subject to the constraints that $d_k, d_{k-1}, \ldots, d_{k-L+2}$ are specified. The equation may be solved by methods outlined by Goldberg [24]. This equation has not been solved in closed form. However, given the values of h_i, a recursive solution should be obtainable.

As noted, both the decision region and the probability of error depend on d_i and thus on h_i. The relationship of h_i and d_i will now be studied in an attempt to determine for which impulse responses the sequential decision procedure would be expected to yield good performance.

5.6 REGION OF CONVERGENCE

The performance of the sequential procedure is a function of h_1, $\sum_{i=1}^{L} h_i^2$, and $\sum_{i=1}^{k} d_i^2 = v^2$. Since v^2 is a measure of the effective variance in the classical decision problem, a smaller v^2 leads to better performance. v^2 will be investigated in the limit as k tends to infinity. This investigation of v^2, will lead to a specification of those impulse responses for which the sequential rule is applicable.

Prior to analyzing the solution of the difference equation, a transformation is applied to the difference equation. In eq. (34) it should be noted that, because the initial conditions are specified in terms of $d_k, \ldots, d_{k-L+1}$, the d_i are a function of k. The d_i thus change with time since k changes with time. The object of the transformation is to make the solution of the difference equation independent of time. Accordingly, the transformation

$$(i) \rightarrow k-(i) \tag{35}$$

is used. At the same time replace d by c. The transformed equation then becomes

$$h_1 c_i + h_2 c_{i-1} + \ldots + h_L c_{i-L+1} = 0 . \tag{36}$$

The initial conditions for equation (36) are specified in terms of $c_o, \ldots, c_{L-1}$. Thus, as desired, the c_i are independent of time. Equation (29) becomes

$$X_k = h_1 B_k - \sum_{i=1}^{k-1} c_{k-i} X_i + \sum_{i=1}^{k} c_{k-i} N_i . \tag{37}$$

The effect of this transformation is to make $v^2 = \sum_{i=0}^{k-1} c_i^{\,2}$.

Thus in order to insure that v^2 is bounded it is necessary to bound $\sum_{i=0}^{\infty} c_i^{\,2}$. Accordingly the conditions under which $\sum_{i=0}^{\infty} c_i^{\,2}$ converges will now be studied.

Following Goldberg (24) the auxiliary equation associated with (36) is

$$z^{L-1} + (h_2/h_1) z^{L-2} + (h_3/h_1) z^{L-3} + \ldots + (h_L/h_1) = 0. \tag{38}$$

The solution of (36) has the form (for distinct roots)

$$c_i = \sum_{j=1}^{j_o} F_j r_j^{\,i} + \sum_{j=j_o+1}^{L-1} F_j r_j^{\,i} \cos(i\Theta_j + E_j) \tag{39}$$

where r_j, $j \leq j_0$, are real roots of the auxiliary equation (38) and r_j and Θ_j, $j > j_0$, are the modulus and phase angle

of the j-th root of (38). F_j and E_j are determined from the initial conditions. Eq. (39) can be written as

$$c_i = \sum_{j=1}^{L-1} F_j r_j^{\,i} \cos(i\Theta_j + E_j) \tag{40}$$

where $\Theta = 0$ and $E_j = \pi/2$ for $j \leq j_o$. Using the expression for c_i given by (40), it can be shown (see Appendix B) that a necessary and sufficient condition for the convergence of $\sum_{i=0}^{\infty} c_i$ is that the roots of the auxiliary equation fall within the unit circle in the z-plane. If there are multiple roots, a similar analysis results in the same necessary and sufficient conditions for the convergence of the series. (See Appendix C.)

From Marden [25], in a result attributed to Gauss, a sufficient condition for all zeros of (38) to be inside the unit circle in the z-plane is that

$$|(h_i/h_1)| < 1/[\sqrt{2}\ (L-1)] \tag{41}$$

for $i \geq 2$.

A more useful procedure is to use a method given by Jury [26]. The inside of the unit circle in the z-plane is mapped into the negative real half of the w-plane by the bilinear transformation

$$z = \frac{(w + 1)}{(w - 1)} .$$

With this transformation, equation (38) becomes

$$D_0 w^{L-1} + D_1 w^{L-2} + \ldots + D_{L-2} w + D_{L-1} = 0 \qquad (42)$$

where

$$D_j = \sum_{\alpha=0}^{L-1} h_\alpha \left[\binom{L-\alpha}{j} - \binom{\alpha-1}{1}\binom{L-\alpha}{j-1} + \binom{\alpha-1}{2}\binom{L-\alpha}{j-2} \right.$$

$$\left. - \ldots + (-1)^{j-1}\binom{\alpha-1}{j-1}\binom{L-\alpha}{1} + (-1)^j \binom{\alpha-1}{j} \right] \qquad (43)$$

and $\binom{n}{k}$ is the binomial coefficient. Applying the Hurewitz criterion to insure that the roots of (42) all fall in the left half plane, one obtains some necessary and sufficient conditions to insure that the roots of (38) fall within the unit circle in the z-plane. The convergence criteria, for various L, are given in (44)-(47). These equations are given for normalized h_i. The h_i are normalized by dividing each h_i by h_1. Thus $h_1 = 1$. Note, the normalized h_i will be used throughout the remainder of Chapter 5 except as noted.

$L = 3$

$$1 + h_2 + h_3 > 0 \qquad (44)$$

$$1 - h_3 > 0$$

$$1 - h_2 + h_3 > 0$$

$L = 4$

$$1 + h_2 + h_3 + h_4 > 0 \tag{45}$$
$$3(1 - h_4) + h_2 - h_3 > 0$$
$$3(1 + h_4) - h_2 - h_3 > 0$$
$$1 - h_2 + h_3 - h_4 > 0$$
$$1 - h_4^2 - h_3 + h_2 h_4 > 0$$

$L = 5$

$$T_0 = 1 + h_2 + h_3 + h_4 + h_5 > 0 \tag{46}$$
$$T_1 = 4(1 - h_5) + 2(h_2 - h_4) > 0$$
$$T_2 = 6(1 - h_5) - 2h_3 > 0$$
$$T_3 = 4(1 - h_5) + 2(h_4 - h_2) > 0$$
$$T_4 = 1 - h_2 + h_3 - h_4 + h_5 > 0$$
$$\Delta = T_1 T_2 - T_0 T_3 > 0$$
$$T_3 \Delta - T_1 T_4 > 0$$

$L = 6$

$$T_0 = 1 + h_2 + h_3 + h_4 + h_5 + h_6 > 0 \tag{47}$$
$$T_1 = 5(1 - h_6) + 3(h_2 - h_5) + h_3 - h_4 > 0$$
$$T_2 = 10(1 + h_6) + 2(h_2 + h_5) - 2(h_3 + h_4) > 0$$
$$T_3 = 10(1 - h_6) + 2(h_5 - h_2) + 2(h_4 - h_3) > 0$$
$$T_4 = 5(1 + h_6) - 3(h_2 + h_5) + h_3 + h_4 > 0$$
$$T_5 = 1 - h_2 + h_3 - h_4 + h_5 - h_6 > 0$$
$$Y_1 = T_1 T_2 - T_0 T_3 > 0$$
$$Y_2 = T_3 Y_1 - T_1 (T_1 T_4 - T_0 T_5) > 0$$
$$T_4 Y_2 - T_5 \left[T_2 Y_1 - T_0 (T_1 T_4 - T_0 T_5) \right] > 0$$

These equations define a region in (L - 1) dimensional space. If the h_i fall within this region $\sum_{i=0}^{\infty} c_i^2$ will converge and $\lim c_i = 0$ as $i \to \infty$. For L = 3, this region is the region indicated by the solid lines of Fig. 11. It is interesting to note that in this case the region is symmetric about the h_3 axis but not about the h_2 axis.

A sufficient condition to insure that v^2 will converge is that the h_i of an impulse response fall within any sub-region of the triangle of Fig. 11. A simple sub-region of this triangle is one which is defined by $|h_2|+|h_3| \leq 1$ shown by the dotted lines of Fig. 11. The convergence region for L = 4 is a complicated three-dimensional figure. While this figure has not been drawn, upon examination of (45), it can be seen that $\sum_{i=2}^{4} |h_i| \leq 1$ is a sub-region of the region of convergence. Thus $\sum_{i=2}^{4} |h_i| \leq 1$ is a sufficient condition for the convergence of the solution of the difference equation. For any L, $\sum_{i=2}^{L} |h_i| \leq 1$ is a sufficient condition for the convergence of the difference equation (see Appendix C). Note the sufficient condition given by Marden is shown by the shaded square in Fig. 11.

The fact that the solution of the difference equation converges is important. It would also be desirable to

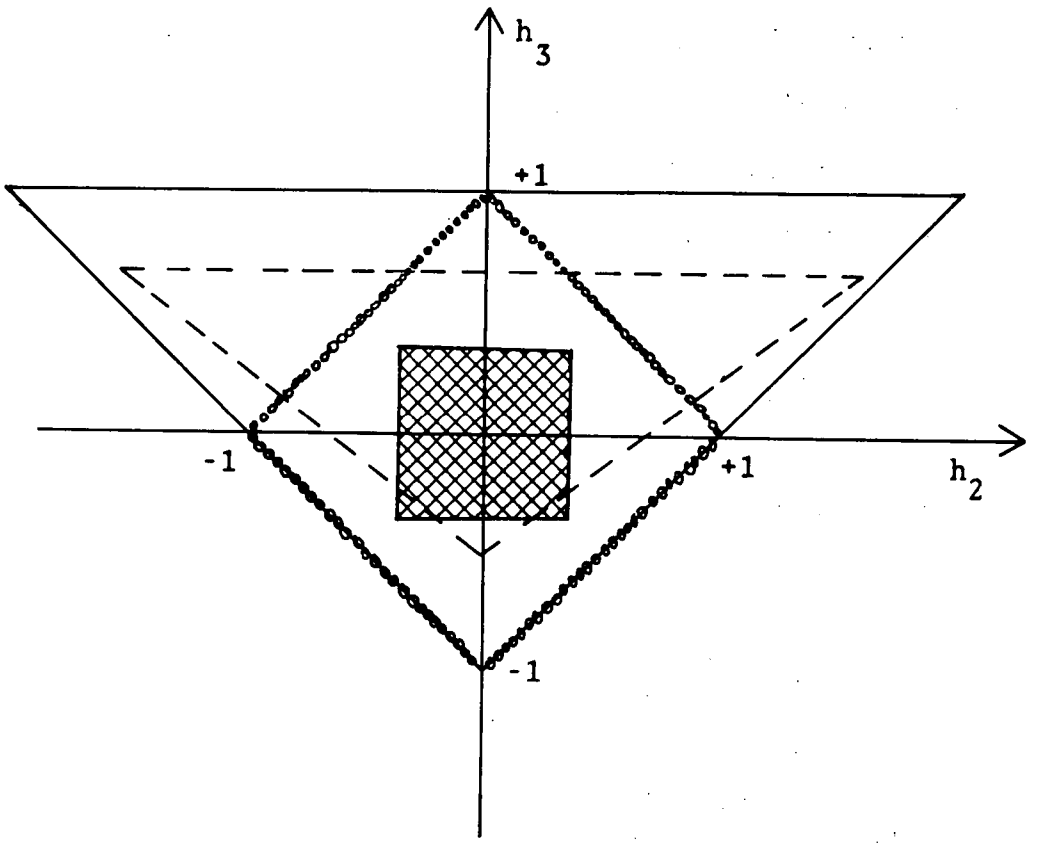

Regions of convergence of the
difference equation solution for L = 3 (h_1=1)

Fig.11

know at what rate it converges since better performance of the detector would be expected for those cases in which the solution converges rapidly. The convergence of $\sum_{i=0}^{\infty} c_i^{\,2}$ depends on the maximum value of r_j. The smaller the largest root, r_{max}, the faster the convergence of v^2. Thus the criterion which must be satisfied so that all roots of (38) fall within a circle of radius $\hat{r}$ in the z-plane will be investigated.

Using the transformation

$$z = \frac{\hat{r}(w + 1)}{w - 1}$$

the area $|z| < \hat{r}$ is mapped into the left half of the w-plane. Define

$$\hat{D}_j = \sum_{\alpha=0}^{L-1} h_\alpha (\hat{r})^{L-\alpha} \left[\binom{L-\alpha}{j} - \binom{\alpha-1}{1}\binom{L-\alpha}{j-1} + \binom{\alpha-1}{2}\binom{L-\alpha}{j-2} \right. \tag{48}$$

$$\left. - \ldots + (-1) \binom{\alpha-1}{j-1}\binom{L-\alpha}{1} + (-1)^{\alpha+1}\binom{\alpha-1}{j} \right] .$$

Applying the Hurewitz criterion, equations identical to (44) - (47) are obtained with all expressions in (42), (44) - (47) replaced by their hat equivalents, all h_i replaced by $\hat{h}_i = (\hat{r})^{L-i} h_i$, and the 1's in (44) - (47) replaced by $(\hat{r})^{L-1}$. For L = 3 the equations become

$$(\hat{r})^2 + h_2\hat{r} + h_3 > 0$$

$$(\hat{r})^2 - h_3 > 0$$

$$(\hat{r})^2 - h_2\hat{r} + h_3 > 0 \ .$$

The region defined by these equations is shown by the dashed triangle of Fig. 11. For a given (h_2, h_3), the triangle can be found which passes through the point (h_2, h_3). From this triangle the maximum value of r_j can be found. Although the value of r_{max} gives an indication of the behavior of $\sum_{i=0}^{\infty} c_i^2$, it can not provide detailed information since the value of $\sum_{i=0}^{\infty} c_i^2$ depends on the initial conditions imposed on the difference equation (these depend on h_i) and on the values of the roots of (38) which are inside the circle $|z| = r_{max}$.

In addition to $\sum_{i=0}^{\infty} c_i^2$, the performance of the sequential procedure also depends on $\sum_{i=1}^{L} h_i^2$. For two different difference equations with equal values of $\sum_{i=0}^{\infty} c_i^2$ the difference equation which has $\sum_{i=1}^{L} h_i^2$ closest to $\left[\max_i |h_i|\right]^2$ will yield the best performance.

This is true since as $\sum_{i=1}^{L} h_i^{\,2} \rightarrow \left[\max_i |h_i|\right]^2$ all of the signal power tends to be in the main lobe of the impulse response.

5.7 APPLICABILITY OF SEQUENTIAL PROCEDURE

Deciding on the symbols sequentially has advantages in that the first parts of the message can be determined before the entire message is received. If the channel is to transmit information, this method can not be applied if the impulse response falls outside of the region of convergence. If the impulse response falls within the convergence region the sequential procedure will operate with varying degrees of success depending on the values of $\sum_{i=0}^{\infty} c_i^2$ and $\sum_{i=1}^{L} h_i^2$.

If the sequential procedure does not work satisfactorily, it is necessary to consider the compound rule, which is discussed in Chapter 6, or some modification of this rule such as the deferred decision rule discussed in Sec. 8.2.

Chapter 6

OPTIMUM DETECTION FOR BLOCK TRANSMISSION OF LENGTH N

6.1 DECISION RULE

For the transmission of a block of N symbols, the optimum receiver of Sec. 4.2.2 will be studied. This receiver bases its estimate of an input on all observed output samples. In order to minimize the expected number of errors, this optimum receiver sets $B_k = b_j$ for that j for which

$$P(B_k = b_j \mid \underline{X}_{N+L-1}) \geq P(B_k = b_i \mid \underline{X}_{N+L-1}) \text{ for all } i \neq j. \quad (49)$$

Note for N input symbols there are N + L - 1 output samples because each input is spread over L sampling periods. In order to implement the optimum receiver $P(B_k \mid \underline{X}_{N+L-1})$ must be calculated. Before studying the decision statistic, $P(B_k \mid \underline{X}_{N+L-1})$, several theorems which will aid in the evaluation of $P(B_k \mid \underline{X}_{N+L-1})$ will be given.

6.2 INDEPENDENCE THEOREMS

Let (X_k) be a set the elements of which are the random variables $X_1,\ldots,X_k$. Let $(X_k)_j$ be one of the 2^k subsets of (X_k). Also define an "L-1 neighbor of X_i" as any X_j which is an element of the set $\{X_{i-L+1},\ldots,X_{i-1},X_{i+1},\ldots,X_{i+L-1}\}$. In addition define (B) to be the set with $B_1,\ldots,B_N$ as elements and let $(B)_j$ be one of the 2^N subsets of (B). Let U_j be a subset of (B) such that for a certain $(X_{N+L-1})_j$

$$U_j = \bigcup_{\alpha} \{B_\alpha,\ldots,B_{\alpha-L+1} \mid X_\alpha \,\varepsilon (X_{N+L-1})_j\}.$$

Thus U_j is necessary and sufficient in order to specify, with the exception of a noise term, each $X_\alpha \,\varepsilon (X_{N+L-1})_j$ by means of equation (6). For example, let $(X_{N+L-1})_j = \{X_k, X_{k+2}, X_{k+3L}\}$. Then

$$U_j = \{B_{k+2}, B_{k+1},\ldots,B_{k-L+1}, B_{k+3L}, B_{k+3L-1},\ldots,B_{k+2L+1}\}.$$

The following theorems are presented. The proofs are given in Appendix D.

Thm: 1: $p(X_{k+L+i}|B_k) = p(X_{k+L+i})$ for $i = 0,1,\ldots,N-k-1$

and $p(X_{k-i}|B_k) = p(X_{k-i})$ for $i = 1,\ldots,k-1$.

Consider $\hat{X} = (X_{N+L-1})_j \cup (X_{N+L-1})_k$ and

$\hat{\beta} = (B)_M \cup (B)_j$ where $(X_{N+L-1})_j \cap (X_{N+L-1})_k = \phi$ and $(B)_M \cap (B)_j = \phi$. The partitioning of $\hat{\beta}$ is accomplished by setting $(B)_j = \hat{\beta} \cap \left(\bigcup_\alpha \{B_\alpha, \ldots, B_{\alpha+L-1} \mid X_\alpha \in \hat{X}\} \right)$.

Define $\hat{X}^* = \left(\bigcup_\alpha \{X_\alpha, \ldots, X_{\alpha+L-1} \mid B_\alpha \in (B)_j\} \right) \cap \hat{X}$. The partitioning of $\hat{X}$ is attained by letting $(X_{N+L-1})_j$ be the subset of (X_{N+L-1}) such that

$$(X_{N+L-1})_j = (\hat{X}^*) \cup \left[\bigcup_i \left(\{L\text{-}1 \text{ neighbors of } X_i^* \mid X_i^* \text{ is known to belong to } (X_{N+L-1})_j\} \cap \hat{X} \right) \right].$$

Note the definition of $(X_{N+L-1})_j$ is recursive. First the L-1 neighbors of X_i, such that $X_i \in \hat{X}^*$, which are also elements of $\hat{X}$ are found. Then the L-1 neighbors of these neighbors, which are also elements of $\hat{X}$, are found. This process continues until no more elements can be found which are L-1 neighbors of a previously found element and which are also elements of $\hat{X}$. When this occurs $(X_{N+L-1})_j$ has been specified. Note also that $(B)_M \cap (U_j \cup U_k) = \phi$. The following theorem is given.

Thm. 2:

$$p(\hat{X} \mid \hat{\beta}) = p((X_{N+L-1})_j \mid (B)_j) p((X_{N+L-1})_k).$$

Two corollaries which will be used are given.

Cor. 2.1 $p((X_{k-i})_j \mid B_k) = p((X_{k-i})_j)$ for $1 \le i \le k - 1$.

Cor. 2.2 Let $(X_k)_U$ be any subset of $\{X_{k+L+i} \mid i \geq 0\}$

then $p((X_k)_U \mid B_k, (X_{k-i})_j) = p((X_k)_U \mid (X_{k-i})_j)$.

In particular, these theorems mean that

Cor. 2.3 $p(X_k \mid \underline{X}_{k-1}, B_k, X_{k+L}, \ldots, X_{N+L-1}) = C_4 p(X_k \mid \underline{X}_{k-1}) B_k$,

and

Cor. 2.4 $p(X_{k+L-1} \mid \underline{X}_{k-1}, B_k, X_{k+L}, \ldots, X_{N+L-1}) =$

$$C_5 p(X_{K+L-1} \mid B_k, X_{k+L}, \ldots, X_{N+L-1})$$

where C_4 and C_5 are independent of the value of B_k.
A further theorem is necessary.

Thm. 3 $p(X_{k+L-1} \mid \underline{X}_k, B_k, X_{k+L}, \ldots, X_{N+L-1}) =$

$$p(X_{k+L-1} \mid B_k, X_{k+L}, \ldots, X_{N+L-1}) .$$

With the aid of these theorems and corollaries, the decision statistic is evaluated in Sec. 6.3.

6.3 EVALUATION OF DECISION STATISTIC

The analysis of the decision statistic proceeds as follows.

$$P(B_k \mid \underline{X}_{N+L-1}) = \frac{p(\underline{X}_{N+L-1} \mid B_k)\ P(B_k)}{p(\underline{X}_{N+L-1})}$$

$$= \frac{P(B_k)p(\underline{X}_{k-1} \mid B_k)\ p(X_k,\ldots,X_{N+L-1} \mid \underline{X}_{k-1},B_k)}{p(\underline{X}_{N+L-1})} .$$

By Cor. 2.1 $P(B_k \mid \underline{X}_{N+L-1})$

$$= \frac{P(B_k)\ p(\underline{X}_{k-1})\ p(X_k,\ldots,X_{N+L-1} \mid \underline{X}_{k-1},B_k)}{p(\underline{X}_{N+L-1})}$$

$$= P(B_k)\ p(\underline{X}_{k-1})\ p(X_{k+L},\ldots,X_{N+L-1} \mid \underline{X}_{k-1},B_k)$$

$$\cdot \frac{p(X_k,\ldots,X_{k+L-1} \mid \underline{X}_{k-1},B_k,X_{k+L},\ldots,X_{N+L-1})}{p(\underline{X}_{N+L-1})} .$$

By Cor. 2.2

$$P(B_k \mid \underline{X}_{N+L-1}) = \frac{P(B_k)\ p(\underline{X}_{k-1})\ p(X_{k+L},\ldots,X_{N+L-1} \mid \underline{X}_{k-1})}{p(\underline{X}_{N+L-1})}$$

$$\cdot\ p(X_k,\ldots,X_{k+L-1} \mid \underline{X}_{k-1},B_k,X_{k+L},\ldots,X_{N+L-1}).$$

Define $C_6 = \dfrac{P(B_k)\ p(\underline{X}_{k-1})\ p(X_{k+L},\ldots,X_{N+L-1} \mid \underline{X}_{k-1})}{p(\underline{X}_{N+L-1})}$.

Thus $P(B_k \mid \underline{X}_{N+L-1}) =$

$$C_6 p(X_k,\ldots,X_{k+L-1} \mid \underline{X}_{k-1}, B_k, X_{k+L},\ldots,X_{N+L-1}). \quad (50)$$

Hence applying criterion (49) is equivalent to setting $B_k = b_j$ for that j for which

$$p(X_k,\ldots,X_{k+L-1} \mid \underline{X}_{k-1}, B_k = b_j,\ X_{k+L},\ldots,X_{N+L-1}) \geq$$

$$p(X_k,\ldots,X_{k+L-1} \mid \underline{X}_{k-1},\ B_k = b_i,\ X_{k+L},\ldots,X_{N+L-1}) \quad (51)$$

for all $i \neq j$.

This joint-conditional probability can be broken down into the product of L conditional probabilities.

$$p(X_k,\ldots,X_{k+L-1} \mid \underline{X}_{k-1},\ B_k,\ X_{k+1},\ldots,X_{N+L-1})$$

$$= \prod_{j=0}^{L-1} p(X_{k+j} \mid \underline{X}_{k-1}, B_k, X_{k+L},\ldots,X_{N+L-1}, D_j) \quad (52)$$

where D_j is now defined to be one of the 2^L subsets of $\{X_k,\ldots,X_{k+L-1}\}$.

In order to evaluate the optimum procedure these conditional probabilities must be evaluated. Since the

X_{k+j} are given by (6), in order to evaluate (52) it is necessary to find a relationship between the B_i's and the X_i's. This relationship, which is recursive, is specified through difference equations. These relationships are studied in Sec. 6.4.

6.4 RECURSIVE RELATIONSHIPS

For the transmission of data in blocks of N symbols over a noisy communication channel which causes inter-symbol interference over L symbols the following equations apply.

$$X_1 = h_1 B_1 + N_1 \quad (53a)$$

$$X_2 = h_1 B_2 + h_2 B_1 + N_2 \quad (53b)$$

$$\vdots$$

$$X_L = h_1 B_L + h_2 B_{L-1} + \ldots + h_{L-1} B_2 + h_L B_1 + N_L \quad (53c)$$

$$\vdots$$

$$X_j = h_1 B_j + h_2 B_{j-1} + \ldots + h_{L-1} B_{j-L+2} + h_L B_{j-L+1} + N_j \quad (53d)$$

$$\vdots$$

$$X_N = h_1 B_N + h_2 B_{N-1} + \ldots + h_{L-1} B_{N-L+2} + h_L B_{N-L+1} + N_N \quad (53e)$$

$$\vdots$$

$$X_{N+L-2} = h_{L-1} B_N + h_L B_{N-1} + N_{N+L-2} \quad (53f)$$

$$X_{N+L-1} = h_L B_N + N_{N+L-1} \quad (53g)$$

From (6), X_{k+j} can be written as

$$X_{k+j} = h_1 B_{k+j} + \ldots + h_{j+1} B_k + \ldots + h_L B_{k+j-L+1} + N_{k+j}. \quad (54)$$

In evaluating (52), it is desirable to find X_{k+j} as a function of $\underline{X}_{k-1}, B_k, X_{k+L}, \ldots, X_{N+L-1}$, and D_j. In order to

find this functional relationship all of the B_i's except B_k must be eliminated from equation (54). This requires that B_α be expressed in terms of $(X_{N+L-1})_j$ and $(B)_\eta$. For L odd, L + 1 equations can be obtained which relate B_α to other B's, to the X_i's and to the N_i's. These L + 1 equations will now be examined.

Write equation (6) for X_{j-1}. Solve this equation for B_{j-1} and use the resulting expression to eliminate B_{j-1} from equation (53d). In a similar manner use $X_{j-2},\ldots,X_1$ to find $B_{j-2},\ldots,B_1$. The following equation is obtained.

$$B_j = \sum_{i=1}^{j} g_i \, (X_{j-i+1} - N_{j-i+1}) \tag{55}$$

where g_i is given by the difference equation

$$h_1 g_i + h_2 g_{i-1} + \ldots + h_L g_{i-L+1} = 0. \tag{56}$$

This is the relationship and difference equation which was obtained in the study of the sequential compound procedure in Chapter 5.

Another expression for B_j can be obtained as follows. Write equation (6) for X_{j-1}. Solve this equation for B_{j-2} and use the resulting expression to eliminate B_{j-2} from equation (53d). Similarly, $B_{j-3},\ldots,B_1$ can be found in terms of $X_{j-2},\ldots,X_2$. After a shift in index, B_j can be written as

$$B_j = \sum_{i=1}^{j} \hat{g}_{ij} \; (X_{j-i+2} - N_{j-i+2}) + \hat{b}_{1j} B_{j+1} \tag{57}$$

where $\hat{g}_{ij}$ and $\hat{b}_{1j}$ are given in terms of a non-linear difference equation. In a manner similar to that of Sec. 4.3, equation (55) will be denoted as a "first order backward-looking equation" and (57) will be denoted as a "second order backward-looking equation".

Proceeding in the above manner, the remaining (L-3)/2 backward-looking equations can be obtained. They are given in equation (58).

$$B_j = \sum_{i=1}^{j} (\hat{g}_{ij})_2 (X_{j-i+3} - N_{j-i+3}) + (\hat{b}_{1j})_2 \; B_{j+1} + (\hat{b}_{2j})_2 B_{j+2} \tag{58,1}$$

$$B_j = \sum_{i=1}^{j} (\hat{g}_{ij})_3 \; (X_{j-i+4} - N_{j-i+4}) + (\hat{b}_{1j})_3 \; B_{j+1} + (\hat{b}_{2j})_3 \; B_{j+2} + (\hat{b}_{3j})_3 \; B_{j+3} \tag{58,2}$$

$$\vdots$$

$$B_j = \sum_{i=1}^{j} (\hat{g}_{ij})_{(L-1)/2} \; (X_{j-i+(L+1)/2} - N_{j-i+(L+1)/2}) + (\hat{b}_{1j})_{(L-1)/2} \; B_{j+1} + \ldots + (\hat{b}_{(L-1)/2,j})_{(L-1)/2} \; B_{j+(L-1)/2} \tag{58,(L-3)/2}$$

Here the $(\hat{g}_{ij})_\nu$ and $(\hat{b}_{\eta j})_\nu$ are specified in terms of non-linear difference equations. Equation (58,ν) will be denoted as the "ν+2nd order backward-looking equation".

In addition to backward-looking equations, forward-looking equations can be obtained. In these forward-looking equations B_j is not a function of any X_i for $i \leq j$. The first order forward-looking equation can be obtained by writing equation (6) for X_{j+L} and solving this equation for B_{j+1}. The resulting expression can then be used in the equation for X_{j+L-1} to eliminate B_{j+1}. In the same manner, $B_{j+2},\ldots,B_N$ can be expressed in terms of $X_{j+L+1},\ldots,X_{N+L-1}$. The first order forward-looking equation then becomes

$$B_j = \sum_{i=0}^{N-j} f_i(X_{j+i+L-1} - N_{j+i+L-1}) \tag{59}$$

where f_i is given by the difference equation

$$h_L f_i + h_{L-1} f_{i-1} + \ldots + h_1 f_{i-L+1} = 0. \tag{60}$$

These equations, (59) and (60), are the equations that would result from a "forward sequential compound procedure"—i.e. one which sequentially makes a decision on the value of the inputs by deciding on the value of B_N first, then the value of B_{N-1}, etc., until the values of all the inputs have been specified.

The second order forward-looking equation can be obtained by solving for $B_{j+1},\ldots,B_N$ in terms of $X_{j+L-1},\ldots,X_{N+L-2}$. The expressions thus obtained are

used to eliminate all of the B's except B_j and B_{j-1} from the expression for X_{j+L-2}. The expression thus obtained is

$$B_j = \sum_{i=0}^{N-j} \hat{f}_{ij} \, (X_{j+i+L-2} - N_{j+i+L-2}) + \hat{a}_{1j} \, B_{j-1} \, . \tag{61}$$

Here the $\hat{f}_{ij}$ and the $\hat{a}_{1j}$ are specified in terms of a non-linear difference equation. In a manner similar to that of the backward-looking equations, the remaining (L-3)/2 forward-looking equations can be obtained. They are

$$B_j = \sum_{i=0}^{N-j} (\hat{f}_{ij})_2 \, (X_{j+i+L-3} - N_{j+i+L-3}) + (\hat{a}_{1j})_2 \, B_{j-1} + (\hat{a}_{2j})_2 \, B_{j-2} \tag{62,1}$$

$$\vdots$$

$$B_j = \sum_{i=0}^{N-j} (\hat{f}_{ij})_{(L-1)/2} \, (X_{j+i+(L-1)/2} - N_{j+i+(L-1)/2}) + (\hat{a}_{1j})_{(L-1)/2} \, B_{j-1} + \ldots + (\hat{a}_{(L-1)/2,j})_{(L-1)/2} \, B_{j-(L-1)/2}) \tag{62,(L-3)/2}$$

(62,ψ) will be called a ψ+2nd order forward-looking equation. The $(\hat{f}_{ij})_\nu$ and the $(\hat{a}_{\eta j})_\nu$ are specified in terms of non-linear difference equations.

In order to show the nature of the difference equations and for illustrative examples consider the special case L = 3. The backward-looking equations become

$$B_j = \sum_{i=1}^{j} g_i \, (X_{j-i+1} - N_{j-i+1}) \tag{63}$$

$$B_j = \sum_{i=1}^{j} \hat{g}_{i,j} \, (X_{j-i+2} - N_{j-i+2}) + \hat{b}_{1,j} \, B_{j+1} \tag{64}$$

and the forward-looking equations become

$$B_j = \sum_{i=0}^{N-j} f_i \, (X_{j+i+2} - N_{j+i+2}) \tag{65}$$

$$B_j = \sum_{i=0}^{N-j} \hat{f}_{i,j} \, (X_{j+i+1} - N_{j+i+1}) + \hat{a}_{1,j} \, B_{j-1}. \tag{66}$$

Here f_i is a solution of

$$h_3 f_i + h_2 f_{i-1} + h_1 f_{i-2} = 0 \tag{67}$$

and g_i is a solution of

$$h_1 g_i + h_2 g_{i-1} + h_3 g_{i-2} = 0. \tag{68}$$

Also $\hat{f}_{ij}$ is given by

$$\hat{f}_{ij} = \frac{(-h_1)^i}{\prod_{k=j}^{j+i} u_k} \tag{69}$$

and $\hat{a}_{1j}$ is given by

$$\hat{a}_{1j} = -h_3/u_j \tag{70}$$

where u_j is obtained from the following difference equation

$$u_j = h_2 - \frac{h_1 h_3}{u_{j-1}} \quad . \tag{71}$$

The difference equation relating the $\hat{f}_{ij}$ is given by

$$\hat{f}_{ij} = \frac{-h_1 \hat{f}_{i-1,j}}{u_{i+j}} \quad . \tag{72}$$

The $\hat{g}_{ij}$ and the $\hat{b}_{1j}$ are given by

$$\hat{g}_{ij} = \frac{(-h_3)^i}{\prod_{k=j-i}^{j} u_k} \tag{73}$$

and

$$\hat{b}_{1j} = -h_1/u_j . \tag{74}$$

In difference equation form, the $\hat{g}_{ij}$ are given by

$$\hat{g}_{ij} = \frac{-h_3 \hat{g}_{i-1,j}}{u_{j-i}} \quad . \tag{75}$$

For this special case of L = 3, the decision regions associated with the compound decision procedure will be specified in Sec. 6.5. Also, the associated

probability will be studied, for L = 3, in Sec. 6.6.

6.5 DECISION REGION

Consider the conditional probabilities of (52), i.e.

$$p(X_{k+j} | \underline{X}_{k-1}, B_k, X_{k+L}, \ldots, X_{N+L-1}, D_j). \tag{76}$$

Using the forward-looking and backward-looking equations for B_j given in Sec. 6.4, X_{k+j} can be expressed in terms of some or all of the elements of the condition in (76). Note, if all of the elements of the condition in (76) do not appear in this expression for X_{k+j}, the conditional probability density for X_{k+j} given in (77) will be an approximation to the actual conditional probability density. The case L = 3 will be examined. Using the above mentioned expressions for X_{k+j}, the most general forms of the conditional probabilities are as follows:

$$\begin{aligned} X_k &\sim N(z_{k,k}B_k + F_{k,k}, v_{k,1}^2) \\ X_{k+1} &\sim N(z_{k+1,k}B_k + F_{k+1,k}, v_{k,2}^2) \\ X_{k+2} &\sim N(z_{k+2,k}B_k + F_{k+2,k}, v_{k,3}^2). \end{aligned} \tag{77}$$

Here

$$\begin{aligned} F_{k,k} &= y_{k,k+1}X_{k+1} + y_{k,k+2}X_{k+2} + M_{k,k} \\ F_{k+1,k} &= y_{k+1,k}X_k + y_{k+1,k+2}X_{k+2} + M_{k+1,k} \\ F_{k+2,k} &= y_{k+2,k}X_k + y_{k+2,k+1}X_{k+1} + M_{k+2,k}. \end{aligned} \tag{78}$$

$v_{k,j}^2$ is the variance associated with X_{k+j-1} when a decision is to be made about the value of B_k. Since the expression for X_{k+j} is, in general, not equal to the expression for $X_{k+j'}$, $j \neq j'$, $v_{k,j}^2$ is generally not equal to $v_{k,j'}^2$. In $F_{k+\nu,k}$ the M's are independent of the value of B_k, X_k, X_{k+1}, or X_{k+2}. The y's and z's depend on the h_i through the difference equations.

Thus, in general, for L = 3

$$P(B_k|\underline{X}_{N+2}) = C_o \left(\frac{1}{2\pi}\right)^{3/2} \frac{1}{v_{k,1}v_{k,2}v_{k,3}}$$

$$\cdot \exp\left[\frac{(-1/2)(X_k - z_{k,k}B_k - F_{k,k})^2}{v_{k,1}^2}\right]$$

$$\cdot \exp\left[\frac{(-1/2)(X_{k+1} - z_{k+1,k}\, B_k - F_{k+1,k})^2}{v_{k,2}^2}\right]$$

$$\cdot \exp\left[\frac{(-1/2)(X_{k+2} - z_{k+2,k}B_k - F_{k+2,k})^2}{v_{k,3}^2}\right]. \tag{79}$$

Here C_o is independent of the value of B_k.

The above is a multi-dimensional probability in L space. For m-ary inputs, the value of B_k can be determined by using decision theory. B_k is set equal to

b_j for that j for which

$$P(B_k = b_j \mid \underline{X}_{N+2}) \geq P(B_k = b_i \mid \underline{X}_{N+2})$$

for all $i \neq j$. The decision regions may be determined from classical decision theory. For the particular case of binary inputs, i.e. B_k can take on the value $\pm A$ (see Sec. 5.3), the decision regions are

$$P(B_k = A \mid \underline{X}_{N+2}) \underset{B_k=-A}{\overset{B_k=A}{\gtrless}} P(B_k = -A \mid \underline{X}_{N+2}). \tag{80}$$

Upon evaluating (80) the decision region can be expressed as

$$ZV^{-2}YX - ZV^{-2}M \underset{B_k=-A}{\overset{B_k=A}{\gtrless}} 0. \tag{81}$$

Here $Z = \left[z_{k,k}, z_{k+1,k}, z_{k+2,k} \right]$,

$$V^{-1} = \begin{bmatrix} \frac{1}{v_{k,1}} & 0 & 0 \\ 0 & \frac{1}{v_{k,2}} & 0 \\ 0 & 0 & \frac{1}{v_{k,3}} \end{bmatrix},$$

$$Y = \begin{bmatrix} 1 & -y_{k,k+1} & -y_{k,k+2} \\ -y_{k+1,k} & 1 & -y_{k+1,k+2} \\ -y_{k+2,k} & -y_{k+2,k+1} & 1 \end{bmatrix}$$

$$X = \begin{bmatrix} X_k \\ X_{k+1} \\ X_{k+2} \end{bmatrix} \quad \text{and} \quad M = \begin{bmatrix} M_{k,k} \\ M_{k+1,k} \\ M_{k+2,k} \end{bmatrix}$$

6.6 PROBABILITY OF ERROR

For the decision region and conditional probabilities given in Sec. 6.5, the probability of error can be calculated. For the general case of m-ary input signals, the results of classical decision theory for m states of nature with multi-dimensional probability density functions would be applied.

For the particular case of binary inputs, the probability of error $P(\varepsilon)$, is given by

$$P(\varepsilon) = P(B_k = -A)P(B_k \text{ is classified as } +A|B_k = -A)$$

$$+ P(B_k = +A)P(B_k \text{ is classified as } -A|B_k = +A).$$

For the case of equally likely inputs,

$P(B_k = -A) = P(B_k = +A) = 1/2$. Also

$P(B_k \text{ is classified as } +A|B_k \text{ actually equals } -A)$

$= P(B_k \text{ is classified as } -A|B_k \text{ actually equals } +A)$.

Thus $P(\varepsilon) = P(B_k \text{ is classified as } +A|B_k \text{ actually equals } -A)$. Define R as the decision region for which B_k is set equal to +A. Then

$$P(\varepsilon) = \int_R P(B_k = -A | \underline{X}_{N+L-1}) d\underline{X}_{N+L-1}) \quad . \tag{82}$$

$$P(\varepsilon) = \int_{-\infty}^{+\infty} \int_{-\infty}^{+\infty} \int_{\tilde{X}_{k+1}}^{+\infty} \left(\frac{1}{2\pi}\right)^{3/2} \frac{1}{v_{k,1} v_{k,2} v_{k,3}}$$

$$\cdot \exp\left[-(1/2)(X_k + z_{k,k}A - F_{k,k})^2/v_{k,1}^2\right]$$

$$\cdot \exp\left[-(1/2)(X_{k+1} + z_{k+1,k}A - F_{k+1,k})^2/v_{k,2}^2\right]$$

$$\cdot \exp\left[-(1/2)(X_{k+2} + z_{k+2,k}A - F_{k+2,k})^2/v_{k,3}^2\right]$$

$$dX_{k+1} dX_{k+2} dX_k \ , \tag{83}$$

where the limit on the integral, $\tilde{X}_{k+1}$, is that expression which is obtained for X_{k+1} from the equation,

$$ZV^{-2}YX - ZV^{-2}M = 0. \tag{84}$$

Define

$$W = \begin{bmatrix} w_1 \\ w_2 \\ w_3 \end{bmatrix}$$

and let

$$W = V^{-1}\left[YX + Z^T - M\right]. \tag{85}$$

Then (83) becomes

$$P(\varepsilon) = \int_{-\infty}^{\infty} \int_{-\infty}^{\infty} \int_{\tilde{w}_2}^{\infty} (1/2\pi)^{3/2} \exp\left[(-1/2)W^T W\right] dw_2 dw_1 dw_3 . \quad (86)$$

Here the limit on the integral, $\tilde{w}_2$, is that expression which is obtained for w_2 from the equation,

$$ZV^{-1}W - ZV^{-2}Z^T = 0. \quad (87)$$

Thus

$$\tilde{w}_2 = \frac{v_{k,2}}{z_{k+1,k}} \left[\frac{-z_{k,k}w_1}{v_{k,1}} - \frac{z_{k+2,k}w_3}{v_{k,3}} + \frac{z_{k,k}^2}{v_{k,1}^2} + \frac{z_{k+1,k}^2}{v_{k,2}^2} + \frac{z_{k+2,k}^2}{v_{k,3}^2} \right]. \quad (88)$$

The right side of (86) can be evaluated (perhaps by numerical methods on the computer) and the probability of error calculated.

6.7 GENERALIZED DECISION REGION AND PROBABILITY OF ERROR

The decision region and associated probability of error for a general value of L will be considered. Define

$$Z = \left[z_{k,k}, z_{k+1,k}, \ldots, z_{k+L-1,k} \right]$$

$$V^{-1} = \begin{bmatrix} \frac{1}{v_{k,1}} & & & & 0 \\ & \cdot & & & \\ & & \cdot & & \\ & & & \cdot & \\ & & & & \cdot \\ 0 & & & & \frac{1}{v_{k,L}} \end{bmatrix},$$

$$Y = \begin{bmatrix} -y_{k,k} & \cdot & \cdot & \cdot & \cdot & -y_{k,k+L-1} \\ \cdot & \cdot & & & & \cdot \\ \cdot & & \cdot & & & \cdot \\ \cdot & & & \cdot & & \cdot \\ \cdot & & & & \cdot & \cdot \\ -y_{k+L-1,k} & \cdot & \cdot & \cdot & & -y_{k+L-1,k+L-1} \end{bmatrix},$$

where $y_{i,i} = -1$

$$X = \begin{bmatrix} X_k \\ \cdot \\ \cdot \\ \cdot \\ X_{k+L-1} \end{bmatrix}, \text{ and } \qquad M = \begin{bmatrix} M_{k,k} \\ \cdot \\ \cdot \\ \cdot \\ M_{k+L-1,k} \end{bmatrix}$$

With these definitions

$$P(B_k \mid \underline{X}_{N+L-1})$$

$$= C_o' \left(\frac{1}{2\pi}\right)^{L/2} \frac{1}{\prod_{i=1}^{L} v_{k,i}}$$

$$\exp\left[-\frac{1}{2}\left(YX - Z^T B_k - M\right)^T (V^{-2})\left(YX - Z^T B_k - M\right)\right] \tag{89}$$

where C_o' is independent of the value of B_k. This is again a multi-variate probability in L space. For m-ary inputs, B_k can be classified by methods of classical decision theory. The decision is determined by setting $B_k = b_j$ for that b_j for which

$$P(B_k = b_j \mid \underline{X}_{N+L-1}) \geq P(B_k = b_i \mid \underline{X}_{N+L-1})$$

for all $i \neq j$. The probability of error can also be determined by classical decision theory.

For binary inputs, generalizing (81), the decision regions become:

$$ZV^{-2}YX - ZV^{-2}M \underset{B_k=-A}{\overset{B_k=+A}{\gtrless}} 0. \tag{90}$$

The decision surface is given by

$$ZV^{-2}YX - ZV^{-2}M = 0. \tag{91}$$

Let R be the decision region corresponding to deciding that $B_k = +A$. Proceeding in a manner similar to that of Sec. 6.6, the generalized probability of error is given as:

$$P(\varepsilon) = \int_R P(B_k = -A \mid \underline{X}_{N+L-1})$$

$$= \int_{-\infty}^{\infty} \cdots \int_{-\infty}^{\infty} \int_{\tilde{X}_{k+\alpha}}^{\infty} \left(\frac{1}{2\pi}\right)^{L/2} \frac{1}{\prod_{i=1}^{L} v_{k,i}}$$

$$\cdot \exp\left[-\frac{1}{2}\left(YX+Z^T-M\right)^T (V^{-2}) \left(YX+Z^T-M\right)\right]$$

$$\cdot dX_{k+\alpha} dX_k \cdots dX_{k+\alpha-1} dX_{k+\alpha+1} \cdots dX_{k+L-1} \tag{92}$$

$\alpha = 0, \ldots, L-1.$

As in Sec. 6.6, the limit on the integral, $\tilde{X}_{k+\alpha}$, is that expression which is obtained for $X_{k+\alpha}$ from equation (91).

Let

$$W = \begin{bmatrix} w_1 \\ \cdot \\ \cdot \\ \cdot \\ \cdot \\ w_L \end{bmatrix}$$

and define

$$W = V^{-1}\left[YX + Z^T - M\right]. \tag{93}$$

Substituting in (92), the generalized probability of error becomes

$$P(\varepsilon) = \int_{-\infty}^{\infty} \cdots \int_{-\infty}^{\infty} \int_{\tilde{w}_{\alpha+1}}^{\infty} \left(\frac{1}{2\pi}\right)^{L/2} \exp\left[(-1/2)W^T W\right] dw_{\alpha+1} dw_1 \cdots$$

$$\cdots dw_\alpha dw_{\alpha+2} \cdots dw_L \tag{94}$$

where the limit on the integral, $\tilde{w}_{\alpha+1}$, is that expression which is obtained for $w_{\alpha+1}$ from the equation

$$ZV^{-2}W - ZV^{-2}Z^T = 0. \tag{95}$$

Solving one obtains

$$\tilde{w}_{\alpha+1} = \frac{v_{k,\alpha+1}}{z_{k+\alpha,k}} \left[\sum_{\substack{i=1 \\ i \neq \alpha+1}}^{L} \frac{z^2_{k+i-1,k}}{v_{k,i}^2} - \sum_{\substack{i=1 \\ i \neq \alpha+1}}^{L} \frac{z_{k+i-1,k} w_i}{v_{k,i}} \right] \tag{95}$$

The probability can thus in theory be calculated. It may however be necessary to calculate the probability of error by computer using numerical techniques. As it turns out, the probability cannot be calculated exactly but an approximation is obtained. The performance of the procedure depends on the D_j of (52) which in turn depend on the break-up of the joint conditional probability (50). The break-up of (50) will be examined in the next section.

6.8 REDUCTION OF JOINT-CONDITIONAL PROBABILITY

It was pointed out in Sec. 6.3 that the optimum rule maximizes $p(X_k,\ldots,X_{k+L-1}|\underline{X}_{k-1},B_k,X_{k+L},\ldots,X_{N+L-1})$. Since it was not known how to calculate this, it was written as the product of L conditional probabilities—i.e.

$$p(X_{k+j}|\underline{X}_{k-1},B_k,X_{k+L},\ldots,X_{N+L-1},D_j) \tag{96}$$

for the L possible D_j. This reduction of the joint conditional probability is not unique. There are L! possible ways to write (50) as a product of L conditional probabilities. It is not known how to calculate some of the $p(X_{k+j}|\underline{X}_{k-1},B_k,X_{k+L},\ldots,X_{N+L-1},D_j)$ exactly. Using equation (6) and the forward-looking and backward-looking equations, X_{k+j} can be found as a function of B_k and some of the X_i, i.e.

$$X_{k+j} = \mathrm{fcn}[B_k,(D_j)_i] \tag{97}$$

where $(D_j)_i$ is defined here to be a subset of $\{\underline{X}_{k-1},X_{k+L},\ldots,X_{N+L-1},D_j\}$. $(D_j)_i$ contains those terms and only those terms which appear explicitly in the transformed equation for X_{k+j}. In some cases one or more of the X's in the conditional part of (96) do not appear explicitly in the relationship (97) for X_{k+j}. The conditional probability (96), however, is not independent of the X's

that do not appear. Thus equation (96) was not always able to be calculated. It can, however, be approximated by $p(X_{k+j} \mid B_k, (D_j)_i)$.

The optimum rule will be approximated by

$\prod_{j=0}^{L-1} p(X_{k+j} \mid (D_j)_i, B_k)$. How good an approximation this is depends on how well $p(X_{k+j} \mid B_k, (D_j)_i)$ approximates $p(X_{k+j} \mid \underline{X}_{k-1}, B_k, X_{k+L}, \ldots, X_{N+L-1}, D_j)$. This in turn depends on which D_j appears in the probability expression. Thus the closeness of the approximation depends on which of the L! reductions of (50) is closen. Since there are N+L-1 equations, the $\underline{X}_{N+L-1}$, and only N unknowns, the $\underline{B}_N$, the relationship for X_{k+j}, as determined by the recursive relationships, is not unique. For a given conditional probability density, $p(X_{k+j} \mid \underline{X}_{k-1}, B_k, X_{k+L}, \ldots, X_{N+L-1}, D_j)$, the closeness of the approximation depends also on which of the several solutions for X_{k+j} is used.

For example, for the case L = 3, letting $\hat{D}_k = \{ \underline{X}_{k-1}, B_k, X_{k+3}, \ldots, X_{N+2} \}$, $p(X_k, X_{k+1}, X_{k+2} \mid \underline{X}_{k-1}, B_k, X_{k+3}, \ldots, X_{N+2})$ can be written in six ways as follows:

$$p(X_k, X_{k+1}, X_{k+2} \mid \hat{D}_k) = p(X_k \mid \hat{D}_k)\, p(X_{k+1} \mid \hat{D}_k, X_k)\, p(X_{k+2} \mid \hat{D}_k, X_k, X_{k+1}) \tag{98a}$$

$$= p(X_k|\hat{D}_k)p(X_{k+2}|\hat{D}_k,X_k)p(X_{k+1}|\hat{D}_k,X_k,X_{k+2}) \qquad (98b)$$

$$= p(X_{k+1}|\hat{D}_k)p(X_k|\hat{D}_k,X_{k+1})p(X_{k+2}|\hat{D}_k,X_{k+1},X_k) \qquad (98c)$$

$$= p(X_{k+1}|\hat{D}_k)p(X_{k+2}|\hat{D}_k,X_{k+1})p(X_k|\hat{D}_k,X_{k+1},X_{k+2}) \qquad (98d)$$

$$= p(X_{k+2}|\hat{D}_k)p(X_k|\hat{D}_k,X_{k+2})p(X_{k+1}|\hat{D}_k,X_k,X_{k+2}) \qquad (98e)$$

$$= p(X_{k+2}|\hat{D}_k)p(X_{k+1}|\hat{D}_k,X_{k+2})p(X_k|\hat{D}_k,X_{k+1},X_{k+2}). \qquad (98f)$$

Because of the non-uniqueness of the functional relationships (97) for X_k, X_{k+1}, and X_{k+2} there are usually several ways to approximate one of the conditional probabilities of (98). For instance, there are four ways to solve for X_{k+1} which may be used to approximate $p(X_{k+1}|X_k,X_{k+2},\hat{D}_k)$. These four solutions are given in (100). They were obtained by using combinations of forward-looking and backward-looking equations when substituting for B_{k+1} and B_{k-1} in the equation

$$X_{k+1} = h_1B_{k+1} + h_2B_k + h_3B_{k-1} + N_{k+1}. \qquad (99)$$

The four expressions for X_{k+1} are

$$X_{k+1} = h_2B_k + h_1\sum_{i=0}^{N-k-1} f_i(X_{k+i+3}-N_{k+i+3}) + h_3\sum_{i=1}^{k-1} g_i(X_{k-i}-N_{k-i}) + N_{k+1} \qquad (100a)$$

$$X_{k+1} = h_1 \sum_{i=0}^{N-k-1} \hat{f}_{i,k+1}(X_{k+i+2}-N_{k+i+2}) + N_{k+1}$$

$$+ (\hat{a}_{1,k+1}+h_2)B_k + h_3 \sum_{i=1}^{k-1} g_i(X_{k-i}-N_{k-i}) \qquad (100b)$$

$$X_{k+1} = h_1 \sum_{i=0}^{N-k-1} f_i(X_{k+i+3}-N_{k+i+3}) + N_{k+1}$$

$$+ h_3 \sum_{i=1}^{k-1} \hat{g}_{i,k-1}(X_{k-i+1}-N_{k-i+1}) + (\hat{b}_{1,k-1}+h_2)B_k \qquad (100c)$$

$$X_{k+1} = h_1 \sum_{i=0}^{N-k-1} \hat{f}_{i,k+1}(X_{k+i+2}-N_{k+i+2}) + N_{k+1}$$

$$+ h_3 \sum_{i=1}^{k-1} \hat{g}_{i,k-1}(X_{k-i+1}-N_{k-i+1}) + (\hat{a}_{1,k+1}+\hat{b}_{1,k-1}+h_2)B_k. \qquad (100d)$$

Table I shows the probability density function which can be obtained from each of the four solutions for X_{k+1} of (100). It also indicates those variables which appear in the conditional part of the optimum decision statistic but do not appear in the conditional part of the approximation.

In some cases there are no conditional variables neglected when solving for X_{k+j}. For instance, X_k can be written as

Equation	Probability density	Random variables of $p(X_{k+1}\|X_k, X_{k+2}, \hat{D}_k)$ not appearing explicitly in probability density
(118,1)	$p(X_{k+1}\|\underline{X}_{k-1}, B_k, X_{k+3}, \ldots, X_{N+2})$	X_k, X_{k+2}
(118,2)	$p(X_{k+1}\|\underline{X}_{k-1}, B_k, X_{k+2}, \ldots, X_{N+1})$	X_k, X_{N+2}
(118,3)	$p(X_{k+1}\|X_2, \ldots, X_k, B_k, X_{k+3}, \ldots, X_{N+2})$	X_1, X_{k+2}
(118,4)	$p(X_{k+1}\|X_2, \ldots, X_k, B_k, X_{k+2}, \ldots, X_{N+1})$	X_1, X_{N+2}

Probability densities obtainable from equation (118)

Table I

$$X_k = h_1 B_k + h_2 g_1 (X_{k-1} - N_{k-1})$$

$$+ \sum_{i=1}^{k-2} (h_3 g_i + h_2 g_{i+1}) \; (X_{k-i-1} - N_{k-i-1}) + N_k. \qquad (101)$$

Since by Cor. 2.3, $p(X_k|\hat{D}_k) = C_4 p(X_k|\underline{X}_{k-1}, B_k)$, every variable in the condition appears in (101). Thus $p(X_k|\underline{X}_{k-1}, B_k)$ can be calculated.

It can thus be seen that there are many approximations which can be used to approximate $p(X_k, X_{k+1}, X_{k+2}|\hat{D}_k)$. The best approximation is that which yields the lowest probability of error. One of the L! reductions of (50) must be chosen, and for this reduction, the L conditional probability densities must be found which minimize the probability of error. No analytical derivation is given as to which is the best reduction to use. A heuristic way of specifying which expression for X_{k+j} to use in solving for the conditional probability densities is to specify that, whenever possible, the order of the equations (of Sec. 6.4) used should be that order for which the solution of the corresponding difference equation converges. By following this procedure, the effective variance associated with each X_{k+j} is minimized. Note, the criterion for the convergence of the solution of the first order difference equations is the same as for the difference equation of the sequential compound case.

For L = 3 either (98b) or (98e) was used for the decision statistic. After application of Cor. 2.3 or Cor. 2.4 respectively, the decision statistic becomes

$$p(X_k|\underline{X}_{k-1},B_k)p(X_{k+1}|\underline{X}_k,B_k,X_{k+2},\ldots,X_{N+2})$$

$$\cdot\ p(X_{k+2}|B_k,X_{k+3},\ldots,X_{N+}2). \qquad (102)$$

Equations (98b) and (98e) were selected since these two expressions involve only one probability density which must be approximated. The other four expressions of (98) involve two probability densities which can only be approximated.

In order to handle a general impulse response with L = 3, it was found that the best way to solve for $p(X_k|\underline{X}_{k-1},B_k)$ and $p(X_{k+2}|X_{k+3},\ldots,X_{N+2},B_k)$ was to use first order equations and the best way to approximate $p(X_{k+2}|B_k\underline{X}_k,X_{k+2},\ldots,X_{N+2})$ was through the use of second order equations.

Although it has not been proved, it is anticipated that this type of approximation is best in general. It would proceed as follows: first remove the end terms from the joint conditional probability and then work toward the center by removing the outermost terms in the joint conditional density—i.e.

$$p(X_k,\ldots,X_{k+L-1} \mid \hat{D}_k) =$$

$$p(X_k|\hat{D}_k)p(X_{k+1}|\hat{D}_k,X_k,X_{k+L-1})\ldots$$

$$\ldots p(X_{k+\frac{L-1}{2}}|\hat{D}_k,X_k,\ldots,X_{k+\frac{L-3}{2}},X_{k+\frac{L+1}{2}},\ldots,X_{k+L-1})\ldots$$

$$\ldots p(X_{k+L-2}|\hat{D}_k,X_k,X_{k+1},X_{k+L-1})p(X_{k+L-1}|\hat{D}_k,X_k). \qquad (103)$$

Also it is expected that the best way to solve for X_{k+j} is to use (j+1)th order equations to solve for X_{k+j} for $j = 1,\ldots,\frac{L-1}{2}$, and ith order equations to solve for x_{k+L-i} for $i = 1,\ldots, \frac{L-1}{2}$.

An evaluation of the sequential procedure and the approximation to the optimum compound procedure is presented in Chapter 7.

Chapter 7

DATA ANALYSIS

The compound and sequential compound procedures of Chapters 5 and 6 were evaluated. The compound procedure presented in Chapter 6 involved the use of cumbersome non-linear difference equations. The solutions of the difference equations were not obtained in closed form. Also, the evaluation of equation (94) involved an L-dimensional integration. In general, this integral could not be evaluated in closed form. The evaluation of (94) may only be obtained by using numerical integration techniques. This would mean that a large amount of computer time is necessary in order to evaluate the compound procedure. Because of these difficulties the compound procedure was evaluated only for the case $L = 3$. For this case, the difference equations are not too overly cumbersome. An evaluation of the integral of (94), though still difficult, can be made without the cost of the resulting computer program becoming prohibitive. The sequential compound procedure can be evaluated with ease for any value of L. However, in order to compare the sequential compound performance with the compound performance, it too was evaluated for only the case $L = 3$.

For the compound case, the reduction of (50) as given in (102) was used as a decision statistic. This decision statistic is reproduced below.

$$p(X_k|\underline{X}_{k-1},B_k)p(X_{k+1}|\underline{X}_k,B_kX_{k+2},\ldots,X_{N+2})$$

$$\cdot\ p(X_{k+2}|B_k,X_{k+3},\ldots,X_{N+2}). \tag{104}$$

The first term of (104), $p(X_k|\underline{X}_{k-1},B_k)$, is the decision statistic for the sequential case. As pointed out in Sec. 6.8, it is possible to calculate $p(X_k|\underline{X}_{k-1},B_k)$. In a similar manner it is also possible to calculate $p(X_{k+2}|B_k,X_{k+3},\ldots,X_{N+2})$. However, since, using first and second order forward-looking and backward-looking equations, an explicit expression was not found for X_{k+1} in terms of $\underline{X}_k,B_k,X_{k+2},\ldots,X_{N+2}$, $p(X_{k+1}|\underline{X}_k,B_k,X_{k+2},\ldots,X_{N+2})$ could not be calculated. Thus in order to use this decision statistic, approximations to $p(X_{k+1}|\underline{X}_k,B_k,X_{k+2},\ldots,X_{N+2})$ must be obtained. One type of approximation which may be used are those approximations which may be obtained by expressing X_k in terms of B_k and <u>some</u> of the following terms: $\underline{X}_k,X_{k+2},\ldots,X_{N+2}$. Using these X_i's there are four ways in which X_{k+1} can be expressed as a function of B_k. These four ways are given in (100). This in turn yields four approximations—i.e.

$$p(X_{k+1} \mid \underline{X}_{k-1}, B_k, X_{k+3}, \ldots, X_{N+2}),$$

$$p(X_{k+1} \mid X_2, \ldots, X_k, B_k, X_{k+3}, \ldots, X_{N+2}),$$

$$p(X_{k+1} \mid X_2, \ldots, X_k, B_k, X_{k+2}, \ldots, X_{N+1}),$$

$$p(X_{k+1} \mid \underline{X}_{k-1}, B_k, X_{k+2}, \ldots, X_{N+1})$$

—which may be used to approximate

$$p(X_{k+1} \mid \underline{X}_k, B_k, X_{k+2}, \ldots, X_{N+2}).$$

For all impulse responses considered, for the four above approximations, $p(X_{k+1} \mid X_2, \ldots, X_k, B_k, X_{k+2}, \ldots, X_{N+1})$ proved to be the best approximation to

$$p(X_{k+1} \mid \underline{X}_k, B_k, X_{k+1}, \ldots, X_{N+2}).$$

This is believed to be true in general. The decision statistic which incorporates the above approximation—i.e.

$$p(X_k \mid \underline{X}_{k-1}, B_k) p(X_{k+1} \mid X_2, \ldots, X_k, B_k X_{k+2}, \ldots, X_{N+1}) \cdot p(X_{k+2} \mid B_k, X_{k+3}, \ldots, X_{N+2})$$

—will be termed an "output directed approximation" to the decision statistic. Let $X_{k+1} \sim N(z_{k+1,k} B_k + F_{k+1,k}, v_{k,2}^2)$ in $p(X_{k+1} \mid X_2, \ldots, X_k, B_k, X_{k+2}, \ldots, X_{N+1})$ and let $v_{k,1}^2$,

$v_{k,3}^2$, $z_{k,k}$, $z_{k+2,k}$ be defined as in Sec. 6.5. In order to evaluate both the compound and sequential compound decision procedures it is necessary to solve for $v^2 = v_{k,1}^2, v_{k,2}^2, v_{k,3}^2$ and the associated means $z_{k,k}$, $z_{k+1,k}$, $z_{k+2,k}$. A FORTRAN IV computer program was written which obtained these quantities. The program was run on Lehigh University's CDC-6400 computer. The program was written to call, as a subprogram, a routine which calculated the output-directed approximate probability of error associated with the decision procedure. The probability of error as given in (86) involves a triple integral. A change from Cartesian coordinates to cylinderical coordinates results in the triple integral of (86) being reduced to a double integral. Using a Univac double integration subroutine, a subprogram was written which evaluates this two-dimensional probability of error integral. Table II shows $v_{k,i}^2$ and the associated $z_{k+i-1,k}$ for various impulse responses.

As a result of the calculation of the $v_{k,i}^2$, $i = 1,2,3$, it was found that, for all impulse responses investigated, if N tends to infinity and if $i \neq i_o$, $v_{k,i}^2 \to \infty$. v_{k,i_o}^2 tended to a limit v_o^2 as N tended to infinity. Here i_o is chosen to be equal to that value of i for which, as N tends to infinity, the limit of $v_{k,i}^2$ exists. This means that in the limit as N tends to infinity only X_{k+i_o-1} carries any information about B_k.

h_1	h_2	h_3	$v_{k,1}^2$	$v_{k,2}^2$	$v_{k,3}^2$	$z_{k,k}$	$z_{k+1,k}$	$z_{k+2,k}$
1	1.9	.95	188	$4.2 \cdot 10^4$	2506	1	7.29	.95
.625	1	.5	13.2	$2.9 \cdot 10^3$	$3.6 \cdot 10^3$	.625	-.61	.5
.125	1	.25	$5 \cdot 10^{42}$	1.09	$2 \cdot 10^{28}$	.125	.935	.25
1	0.1	0.8	2.78	$8.2 \cdot 10^2$	$7.4 \cdot 10^2$	1	5.0	.8
1	0.1	-.1	1.02	10^{42}	10^{55}	1	.37	-.1
1	0.1	.95	9.5	$9.4 \cdot 10^4$	113	1	-.49	.95
.333	1	.25	$6.6 \cdot 10^{42}$	1.24	10^{55}	.333	.816	.25
1	1.05	.025	233	18.6	10^{158}	1	.97	.025
1	-.9	-.05	9.7	$1.3 \cdot 10^3$	10^{125}	1	-.95	-.05

Calculated means and variances

Table II

Thus, for all impulse responses investigated, the three-dimensional output directed probability of error integral can be reduced to a one-dimensional gaussian integral which can be solved by table look-up. Although it has not been proved, it is expected that this divergence of all but one of the $v_{k,i}^2$ occurs for all impulse responses with L = 3. It is anticipated that this situation holds true for larger values of L. The complicated decision structure would then be reduced to a classical m-state one-dimensional structure.

Note, throughout this presentation, ${v_{k,3}}^2$ may be considered to be equal to infinity for $N \to \infty$. This may be seen to be not a restrictive assumption since upon studying the region of convergence for both ${v_{k,1}}^2$ and ${v_{k,3}}^2$ it is evident that ${v_{k,1}}^2$ and ${v_{k,3}}^2$ can not both be convergent. Thus if the impulse response is such that ${v_{k,3}}^2$ would actually be convergent the interchange of h_1 and h_3 would ensure that the new ${v_{k,3}}^2$ would be divergent and thus tend to infinity as $N \to \infty$. Furthermore, this interchange of h_1 and h_3 has no effect on the "output directed" or the below described "input directed" approximations to the probability of error. It also has no effect on the actual performance.

For m-ary signaling, the output directed approximate probability of error was evaluated for m=2, N=50, and k=25. This performance is shown in Figs.12-14 as a function of signal-to-noise ratio (SNR) (SNR = $(\sum_{i=1}^{L} {h_i}^2 A^2)/N_o$, where A is

Detector performance (h_1=5/8, h_2=1, h_3=1/2)

Fig. 12

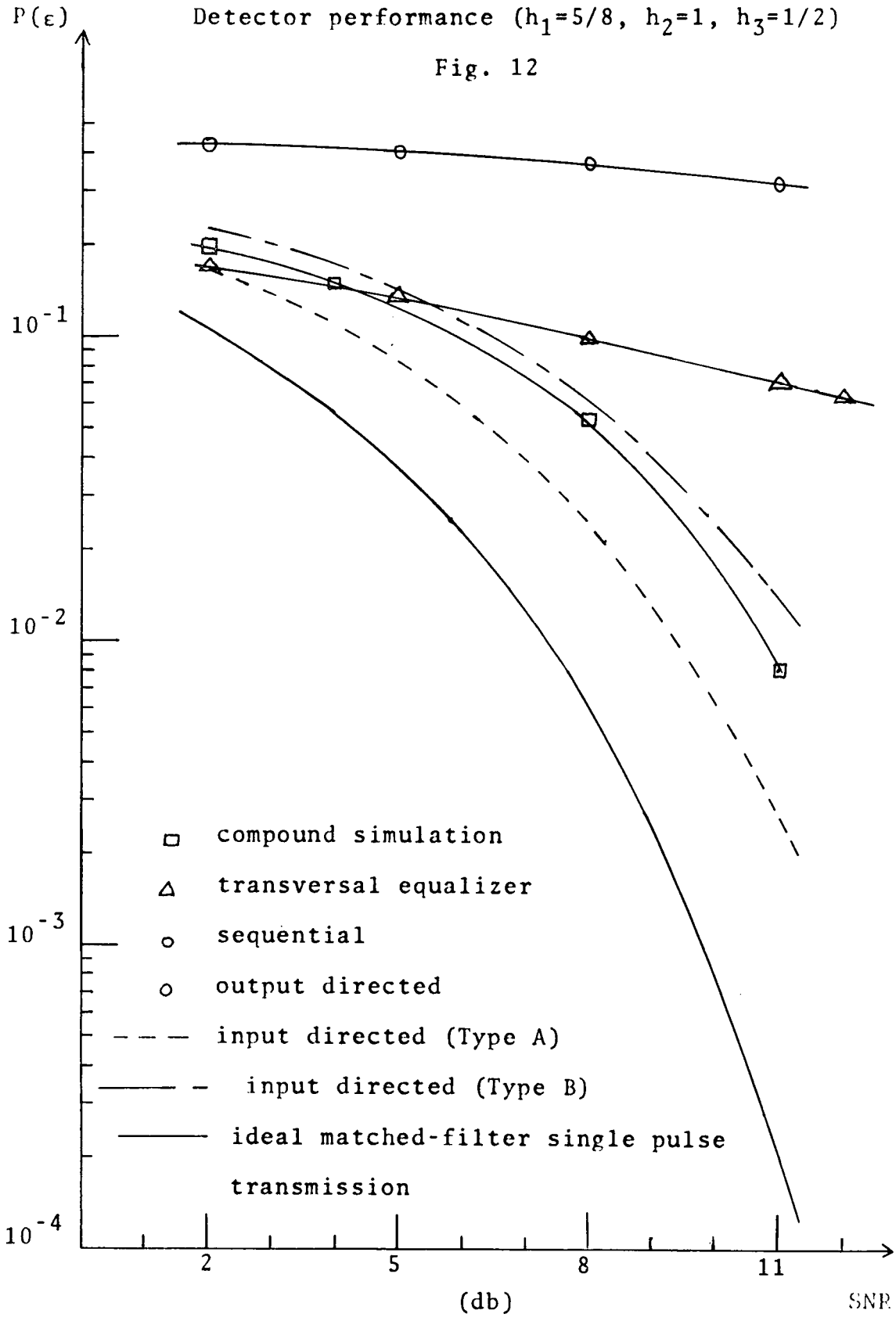

Detector performance (h_1=1/8, h_2=1, h_3=1/4)

Fig. 13

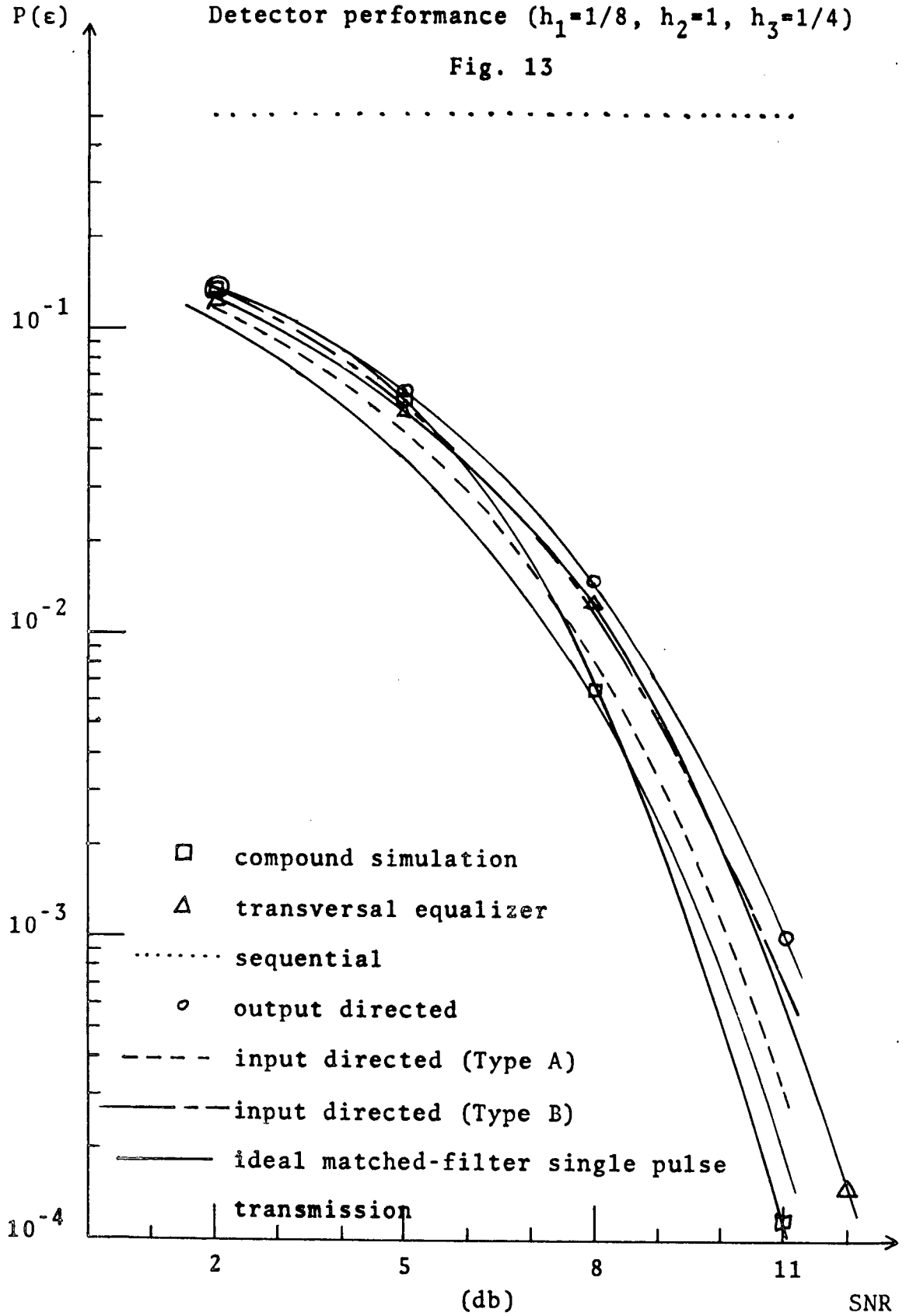

Detector performance (h_1=1, h_2=0.1, h_3=0.8)

Fig. 14

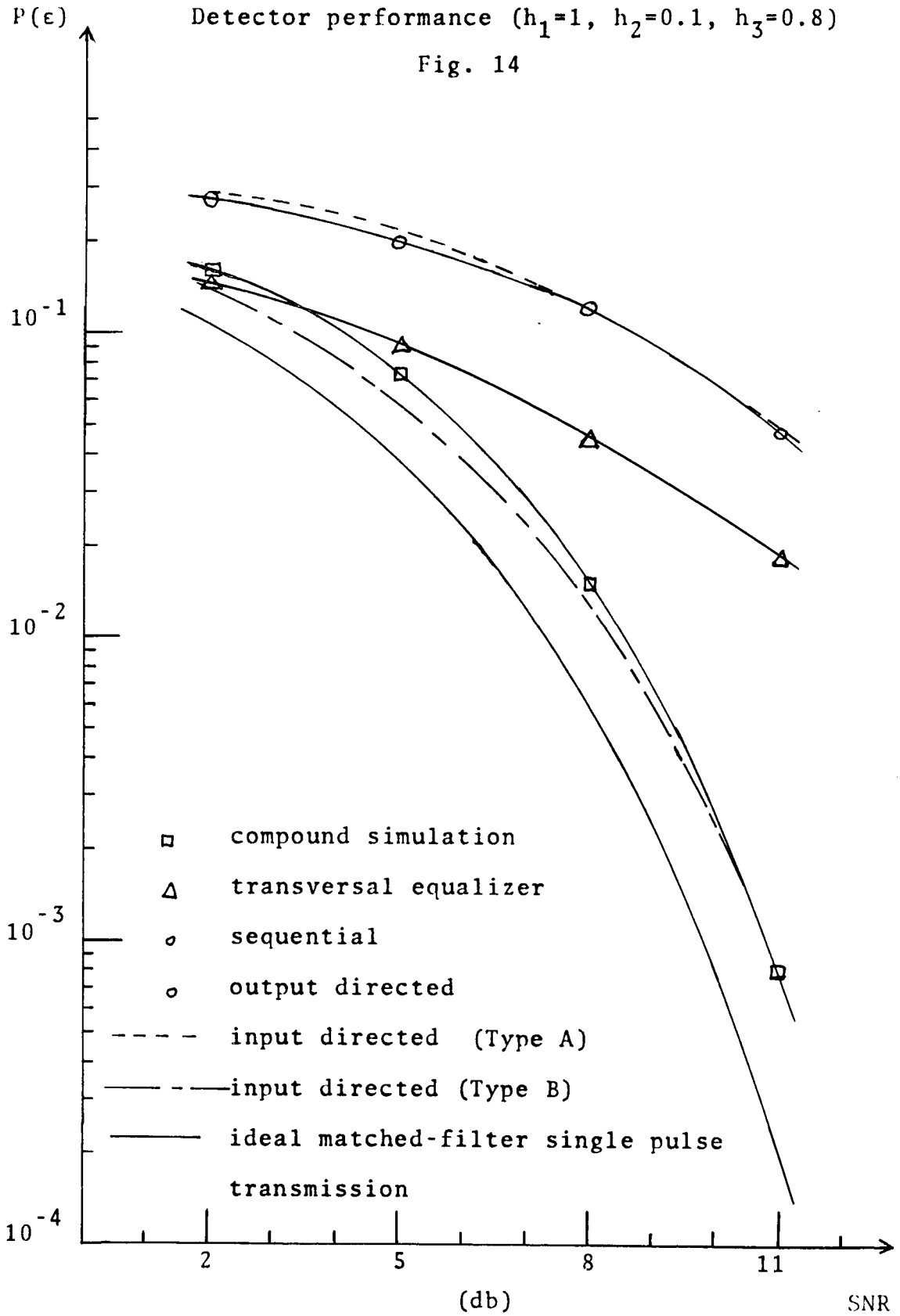

the magnitude of the input signal voltage and N_o is the noise power) for three different impulse responses. These graphs also show, as an absolute lower bound to the actual probability of error, the probability of error associated with the matched filter single-pulse-transmission case.

A program was written to simulate a transversal equalizer which uses, as a criterion for setting the tap gains, a minimization of the mean square error due to both intersymbol interference and noise [3]. The results of the simulations are shown in Figs. 12-14. All simulations were made with 15 taps on the TDL of the equalizer.

Another program was developed which simulates the compound decision procedure. The results of these simulations are also plotted in Figs. 12-14. For these simulations N was taken to be equal to 30. The probability of error that is plotted is the probability of error averaged over all B's.

For all three impulse responses, the output directed approximate performance is larger than the actual simulated performance. It is interesting to note that for low SNR the calculation and simulation are in better agreement than for high SNR. The simulated performance of the transversal equalizer falls between the output directed calculation and the simulation of the compound procedure. The closeness of the calculation to the compound simulation depends on the impulse response.

The results also demonstrate that the transversal equalizer performs close to the optimum compound procedure at low SNR but deviates markedly from the optimum compound procedure at high SNR. Thus at high SNR, where the disturbance caused by intersymbol interference in much greater than the disturbance caused by additive noise, neither the transversal equalizer nor the output directed calculation approximates the true performance as well as at low SNR.

As can be seen, for the impulse responses of Fig. 12 and Fig. 14, the output directed calculation does not give a very good approximation to the actual compound performance. Moreover, since $p(X_{k+1} \mid \underline{X}_k, B_k, X_{k+2}, \ldots, X_{N+2})$ can only be approximated while the other two probability terms of (104) can be calculated, this discrepancy, for these impulse responses, is due partly to the fact that the approximation used for $p(X_{k+1} \mid \underline{X}_k, B_k, X_{k+2}, \ldots, X_{N+2})$ is not good enough. Accordingly other approximations must be sought for $p(X_{k+1} \mid \underline{X}_k, B_k, X_{k+2}, \ldots, X_{N+2})$.

A type of approximation which has proved fruitful is attained by allowing input symbols to become part of the condition on X_{k+1}. That is, $p(X_{k+1} \mid \underline{X}_k, B_k, X_{k+2}, \ldots, X_{N+2})$ will be approximated by $p(X_{k+1} \mid \underline{X}_k, \underline{B}_N, X_{k+2}, \ldots, X_{N+2})$ or by $p(X_{k+1} \mid \underline{X}_k, B_1, \ldots, B_{k-2}, B_k, \ldots, B_N, X_{k+2}, \ldots, X_{N+2})$. These types of approximations will be termed "input directed approximations". Note

$p(X_{k+1} \mid \underline{X}_k, \underline{B}_N, X_{k+2}, \ldots, X_{N+2}) = p(X_{k+1} \mid B_{k+1}, B_k, B_{k-1})$ and $p(X_{k+1} \mid \underline{X}_k, B_1, \ldots, B_{k-2}, B_k, \ldots, B_N, X_{k+2}, \ldots, X_{N+2})$ can be shown to be equal to

$$p(X_{k+1} \mid B_k, B_{k-2}, B_{k-3}, B_{k+1}, X_k, X_{k-1}). \tag{105}$$

Just as it was impossible to calculate $p(X_{k+1} \mid \underline{X}_k, B_k, X_{k+2}, \ldots, X_{N+2})$ because X_{k+1} could not be explicitly expressed in terms of $\underline{X}_k, B_k, X_{k+2}, \ldots, X_{N+2}$, $p(X_{k+1} \mid B_k, B_{k-2}, B_{k-3}, B_{k+1}, X_k, X_{k-1})$ also can not be calculated because X_{k+1} can not be explicitly expressed in terms of $B_k, B_{k-2}, B_{k-3}, X_k, X_{k-1}$. Thus approximations to $p(X_{k+1} \mid B_k, B_{k-2}, B_{k-3}, B_{k+1}, X_k, X_{k-1})$ are necessary. Two approximations which are of interest are $p(X_{k+1} \mid B_k, B_{k+1}, X_k, B_{k-2})$ and $p(X_{k+1} \mid B_k, B_{k+1}, X_{k-1}, B_{k-2}, B_{k-3})$. Note, it is necessary that B_{k+1} appears in the condition of (105) since if it didn't X_{k+2} would appear in the condition of the approximation to (105). Since X_{k+2} does not provide information about B_k ($v_{k,3}{}^2 \to \infty$) use can not be made of X_{k+2}. This necessitates the use of B_{k+1} in the condition of (105). There are thus three input directed approximations for $p(X_{k+1} \mid \underline{X}_k, B_k, X_{k+2}, \ldots, X_{N+2})$ which are of interest. These approximations are

$$p(X_{k+1} \mid B_{k+1}, B_k, B_{k-1}) \tag{106a}$$

$$p(X_{k+1} \mid B_{k+1}, B_k, X_k, B_{k-2}) \tag{106b}$$

$$p(X_{k+1} \mid B_{k+1}, B_k, X_{k-1}, B_{k-2}, B_{k-3}). \tag{106c}$$

Note, equation (106a) will be called a Type A input directed approximation and (106b,c) will be designated as Type B. For each impulse response one of the expressions of (106) must be chosen to approximate $p(X_{k+1} \mid \underline{X}_k, B_k, X_{k+2}, \ldots, X_{N+2})$ in (104). This expression should be that expression of (106) for which the input directed approximate performance is closest to the actual simulated performance.

In order to specify which is the best type of input approximation to use, the concept of amount of information which a probability density provides about B_k must be developed. For the case of $B_k = +A$ and $B_k = -A$, two probability densities can be obtained for each of the expressions in (106). The amount of information in each of the expressions of (106) can then be heuristically specified as being proportional to the ratio of the distance between the means to the standard deviation of the distribution. Since

$$X_{k+1} = h_1 B_{k+1} + h_2 B_k + h_3 B_{k-1} + N_{k+1} \tag{107a}$$

$$= h_1 B_{k+1} + h_2 B_k + (h_3/h_1)(X_{k-1} - N_{k-1}) + N_{k+1} \tag{107b}$$

$$= h_1 B_{k+1} + (h_2 - h_1 h_3/h_2) B_k + (h_3/h_2)(X_k - N_k) + N_{k+1} \tag{107c}$$

this ratio can be given as in Table III for the impulse responses studied.

For all impulse responses investigated, the Type B input directed approximation which provides the most information about B_k generally proved to be the best input directed approximation. If the amount of information about B_k provided by the Type A approximation is greater than that provided by Type B, then Figs. 12 and 13 seem to indicate that at a high enough SNR a Type A approximation would be the best to use. Thus, the rule that is used to select the best input directed approximation is—select the Type B approximation which provides the most information about B_k; however, if Type A provides more information about B_k than does Type B and the SNR is high enough, select Type A. For the SNR studied, Table III gives the best input directed approximations which were obtainable for the indicated impulse responses.

The input directed performance calculations are shown in Fig. 12-14. It can be seen that this input directed

Equation	Formula for information ratio	Value of information ratio		
		$h_1 = 5/8$ $h_2 = 1$ $h_3 = 1/2$	$h_1 = 1/8$ $h_2 = 1$ $h_3 = 1/4$	$h_1 = 1$ $h_2 = 0.1$ $h_3 = 0.8$
(117a)	$\frac{h_2 A}{2}$	$A/2$	$A/2$	$0.1\left(\frac{A}{2}\right)$
(107b)	$\frac{h_2 (A/2)}{\sqrt{(h_3^2/h_1^2) + 1}}$	$.78\left(\frac{A}{2}\right)^*$	$.446\left(\frac{A}{2}\right)$	$.078\left(\frac{A}{2}\right)$
(107c)	$\frac{\left[h_2 - (h_1 h_3)/h_2\right](A/2)}{\sqrt{(h_3^2/h_1^2) + 1}}$	$.64\left(\frac{A}{2}\right)$	$.935\left(\frac{A}{2}\right)^*$	$.98\left(\frac{A}{2}\right)^*$

*indicates this is the approximation used for that particular impulse response

Information measure

Table III

performance approximation agrees very well with the actual simulated performance. Discrepancies may be due to sample size problems in the simulated performance. It thus appears that a good approximation to the compound performance has been found. It is anticipated that this type of approximation will, in general, give a good indication of the actual performance.

Fig. 15 shows the matched filter single-pulse-transmission performance, simulated actual performance, and performance of a transversal equalizer for $h_1 = h_2 = h_3 = 1$. This is a channel which Austin [12] defines as having maximum distortion. It is interesting to note that this channel yields better performance than does one with a $h_1 = 5/8$, $h_2 = 1$, and $h_3 = 1/2$ impulse response.

For each of the four above impulse responses Figs. 16-19 show the ideal single-pulse-transmission performance, the simulated actual performance and the calculated performance of a theoretical scheme whereby the energy in the sidelobes of the impulse response would be exactly subtracted out of the received signal. There has been speculation that the best that one could do at the receiver is to subtract out this energy in the sidelobes. These results show that this is not so. For the impulse responses of Fig. 16 and Fig. 17, the compound procedure does better than simply subtracting out the sidelobe energy. For the impulse response of Fig. 18 the compound procedure yields

Detector performance $(h_1=h_2=h_3=1)$

Fig. 15

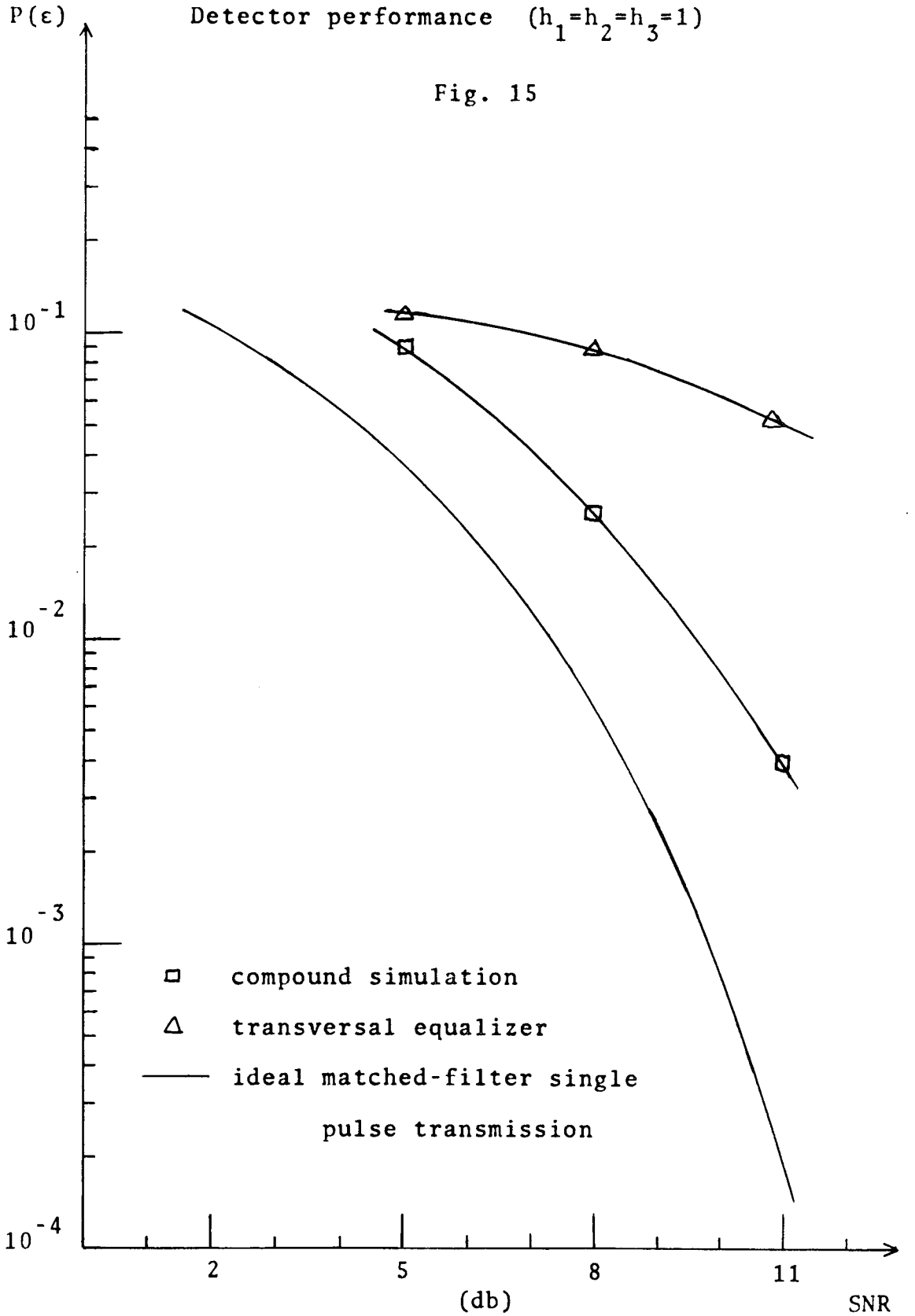

Comparison of compound procedure with other types of detection (h_1=1, h_2=0.1, h_3=0.8)

Fig. 16

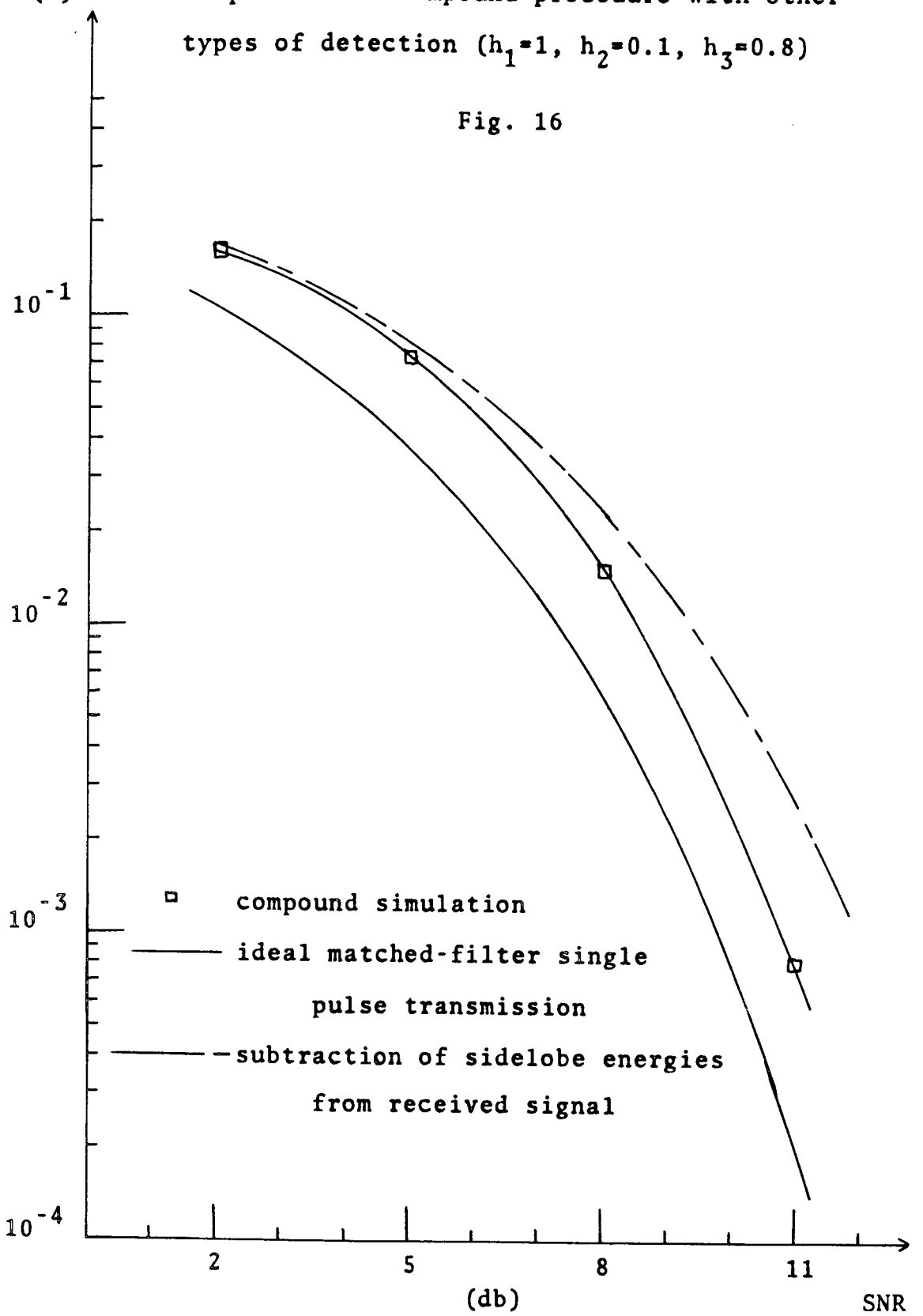

Comparison of compound procedure with other types of detection ($h_1=h_2=h_3=1$)

Fig. 17

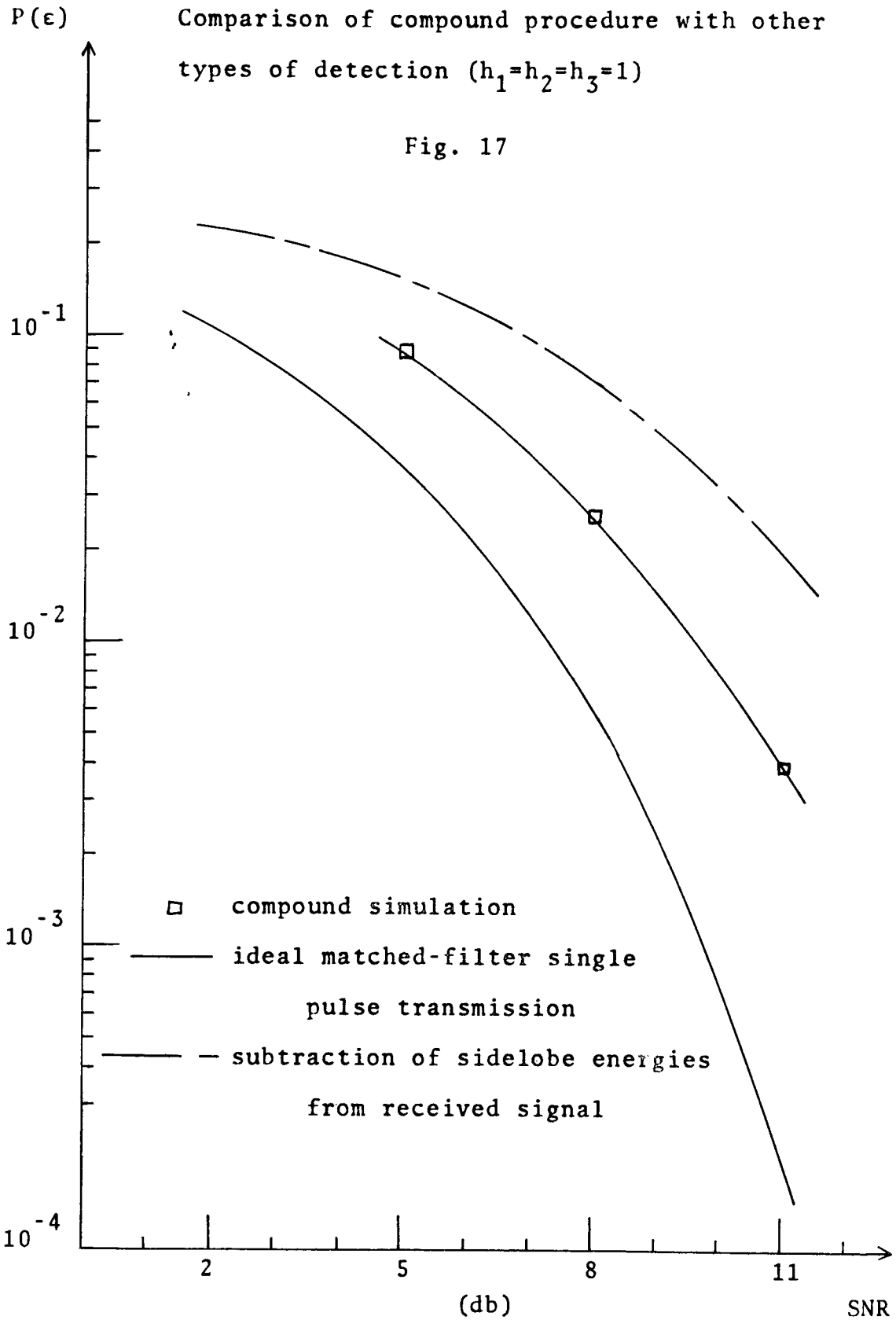

Comparison of compound procedure with other types of detection (h_1=1/8, h_2=1, h_3=1/4)

Fig. 18

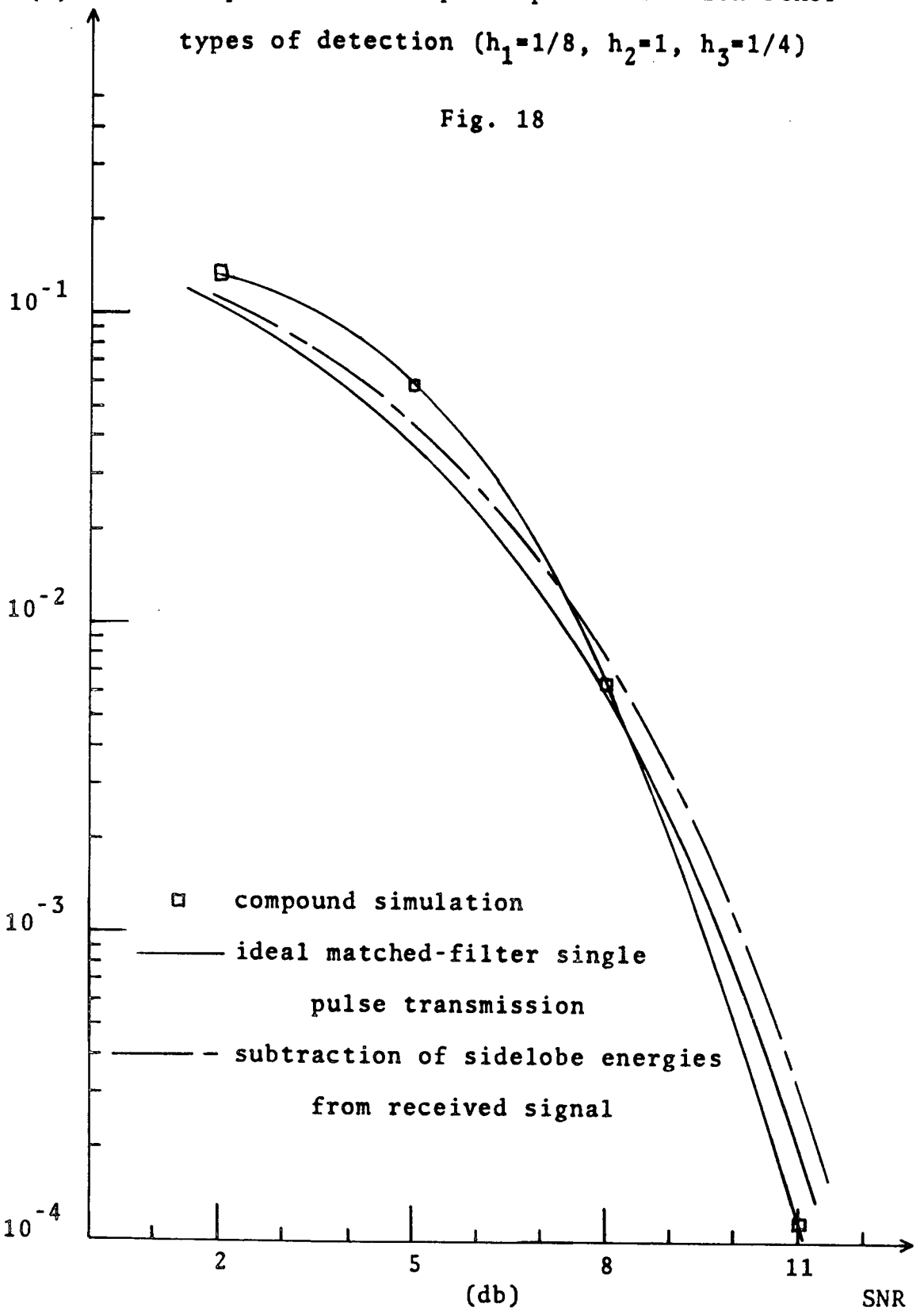

Comparison of compound procedure with other types of detection (h_1=5/8, h_2=1, h_3=1/2)

Fig. 19

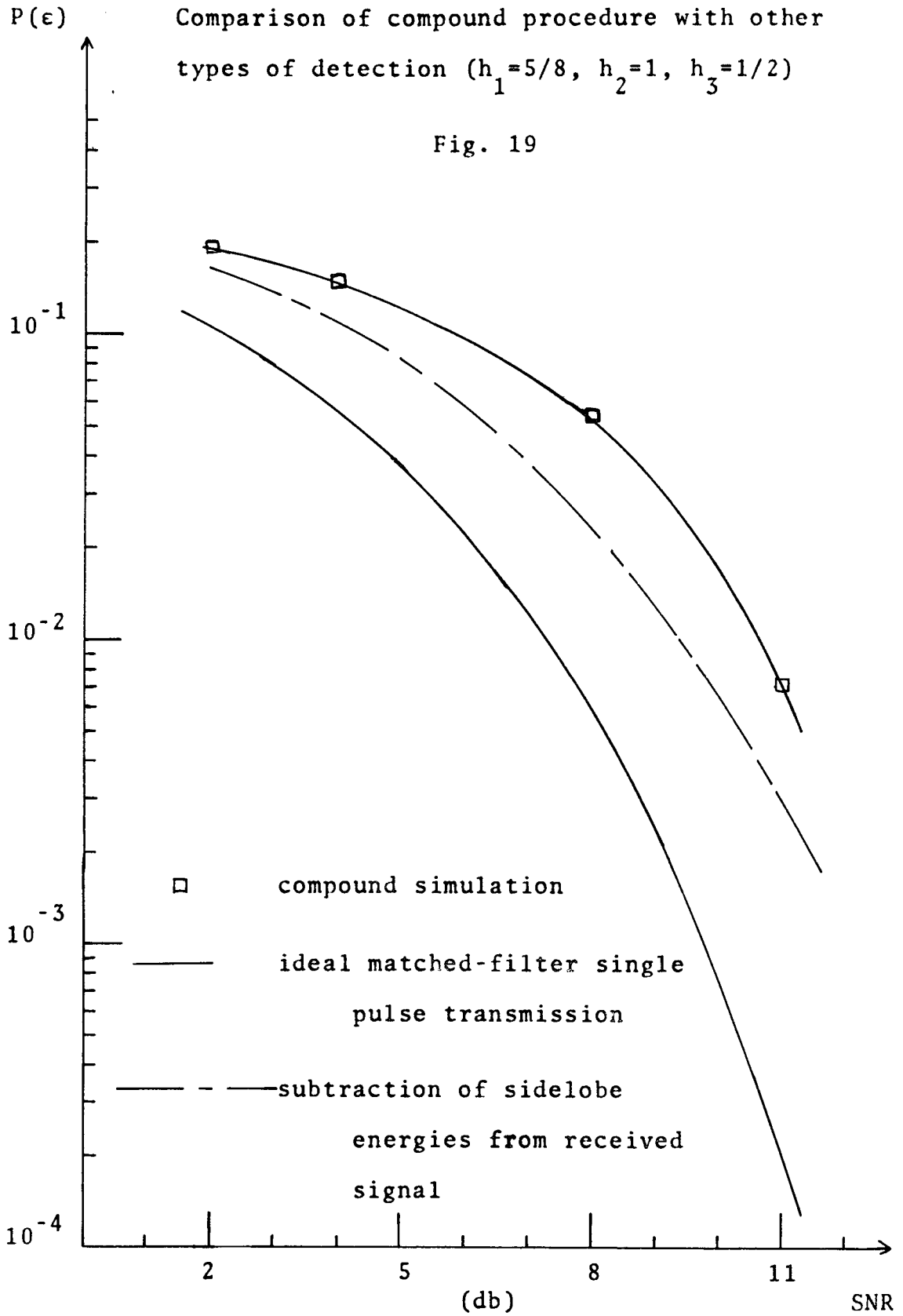

essentially the same performance as that which would occur by subtracting out the energy. In Fig. 19, the decision procedure does not work as well as that procedure which would result if the sidelobe energy could be exactly subtracted out. However, Fig. 19 does show that, as the SNR is increased, the optimum procedure does approach that performance which would result if the sidelobe energy could be exactly subtracted out of the received signal. Figs. 16-19 indicate that as the SNR is increased to a high enough value it is likely that the optimum compound detector will always do better than subtracting out the energy in the sidelobes. It is not known how to specify, for an arbitrary impulse response, what this value of SNR would be.

The results indicate that a very good approximation to the actual performance can be found. This was true for each of the impulse responses investigated and it is expected to be true in general for impulse responses with $L = 3$. Also, a similar procedure should be obtainable for $L > 3$. The results also show that the compound detector does better, in some cases, than just subtracting out the side-lobe energy. Finally, the compound performance was shown to be poorer for a channel with $h_1 = 5/8$, $h_2 = 1$, and $h_3 = 1/2$ than for a channel with $h_1=h_2=h_3=1$. Thus Austin's [12] maximal distortion channel does not yield poorest performance. This seems intuitively surprising since a channel

with maximal distortion would intuitively be expected to yield a poorer performance than a channel with another impulse response.

Suggestions for further research into noisy intersymbol interference channels are given in Sec. 8.2.*

---

*All computer programs used in this study will be available from the authors' files for five years.

Chapter 8

CONCLUSION

8.1 SUMMARY

This report has considered the transmission of m-ary symbols over a baseband communication system which induces intersymbol interference over L adjacent symbols. While research in this field has by no means been exhausted by this work, results which are significant and which should aid in further research into the noisy intersymbol interference problem have been attained. Both one-shot and multi-shot transmission were considered. For multi-shot transmission sequential compound decision theory was used to specify the decision regions and to calculate the associated probability of error. The performance can be calculated for any value of L. In order for this procedure to be applicable, the sampled values of the impulse response must fall within a L-dimensional region. This region is specified for L = 3,4,5 and 6. The multi-shot detection problem was reduced to a classical m-state classification problem.

The case of one-shot transmission was also studied. Here, through the use of decision theory, the optimum decision statistic was also obtained. Since this

statistic can not be calculated exactly, output directed and input directed approximations are made in order to estimate the probability of error in the one-shot transmission case. The output directed approximation makes use of only received signals in arriving at the approximate probability of error. The input directed approximations assume that some of the input symbols are known at the receiver. The input directed approximations make use of these input symbols in arriving at the probability of error calculation. The closeness of the approximation to the actual simulated performance depends on the nature of the impulse response. Note, knowledge of the inputs is not necessary at the receiver in order to calculate the input directed probability of error.

In the output directed approximation, it was found that for all impulse responses considered, as N tends to infinity only one of the sampled outputs provides any information about B_k. This reduces the output directed approximation to a simple one-dimensional decision problem. Although this was only investigated for the case L = 3, it is expected that this type of reduction of the output directed approximation will be valid for any value of L.

For all cases considered the input directed approximation was very close to the actual simulated performance. For only one of the impulse responses considered did the output directed approximation give a good indication of

the actual performance. It is expected that, in general, the input directed approximation will yield a close approximation to the actual performance. This is a significant result since with this approximation the optimum performance can be calculated with ease. This knowledge would be useful if one is faced with the problem of choosing one of several different channels over which to transmit data. It also provides a standard with which to compare other sub-optimal filtering and detection techniques.

It was also found that at low SNR the transversal equalizer and the compound procedure yielded essentially the same performance. At higher SNR the compound procedure was found to perform considerably better than did the transversal equalizer.

Another significant result of this research was that the performance, for some impulse responses, was found to be better than that which would be obtained if the decision could be made after the sidelobe energies would be exactly subtracted out of the received signal. This disproves the idea currently held by some that the best that one could do would be to subtract out the energy in the sidelobes of the impulse response and then make a decision about the input. The results also indicate that the compound performance does not achieve the performance that would be obtained by matched filter detection of a

single transmitted pulse; although, in some cases, the performance of the two is quite close. This would disprove another theory held by some that the compound procedure somehow gathers up all the energy at the output due to each input and then makes a decision about the input based on this collected energy (as a matched filter does when a single pulse is transmitted). However, the optimum compound procedure does make use of some of the dispersed energy.

8.2 SUGGESTIONS FOR FURTHER RESEARCH

There are questions which this research leaves unanswered. Probably the most obvious area in which further work could be done is in the extension of the work on compound detection to impulse responses with L greater than three. It would be desirable to study the solution of the higher order difference equations with the aim of finding, if possible, for what impulse responses the solutions of the difference equations converge. It would perhaps also be interesting and fruitful to investigate approximations to the compound procedure and to compare these approximations with the simulated actual performance and with the performance of the transversal equalizer for these higher values of L.

As noted in Sec. 2.2 complex valued impulse responses may occur in baseband systems. These types of impulse responses do not lead to conceptual difficulties but mathematical difficulties may arise. With a complex impulse response, each of the X_{k+i}, $i = 0,\ldots,L-1$, are vector random variables. Instead of the X_{k+i} being normally distributed, the X_{k+i} have a bivariate normal distribution. The sequential procedure would then involve m different bivariate normal distributions with simple m-state classification procedures being applicable. The

compound procedure of Sec. 6.5 would become a decision procedure in 2L dimensional space with m states of nature. The associated probability of error would be an integration over this expanded space. The specific details of this procedure could be investigated in further research.

The optimum sequential decision procedure has been investigated in this report. In some cases of data reception a delayed sequential rule—i.e. one where $\underline{X}_{k+D}$ is available when the decision on B_k must be made—is applicable and desirable. This delayed sequential procedure is in one sense an approximation to the compound procedure. This delayed sequential procedure could be investigated with a view to calculating or bounding the associated probability of error.

Since the input directed approximation gave good results, an area which may be fruitful for further work is an investigation of the optimum classification method and the associated probability of error for a decision feedback procedure and for a recursive type of decision procedure. The recursive procedure would make a preliminary decision about the input symbols. Based on these decisions and the channel output a second level decision could be made about each input symbol. These decisions could in turn be used to arrive at a third level decision. This recursive process could continue to the M-th level. The probability of error associated with the M-th level

decision could be investigated to determine if it approximates the performance of the optimum compound procedure and, if it does, the convergence of the approximation to the actual performance could be investigated as a function of M.

Further work could be done for the case of $L = 3$. It would be interesting to know how the shape of the impulse response affects the behavior of the compound rule in relation to a scheme which subtracts out the energy in the sidelobes.

Finally this work could be extended by studying, for $L = 3$, m-ary transmission, $m > 2$, and comparing actual compound performance, the calculated compound performance, and the performance of the transversal equalizer.

The problem of communication over a noisy intersymbol interference channel has by no means been solved in this report. This work does bring one a step closer to an easier evaluation of sub-optimal detection procedures which have been or will be proposed. This work will also serve to indicate how the channel impulse response might be shaped in order to achieve good data communication.

APPENDIX A

SEQUENTIAL DIFFERENCE EQUATION

The derivation of the difference equation, (34), of Sec. 5.5 is presented. The difference equation is reproduced here as

$$h_L d_i + h_{L-1} d_{i-1} + \ldots + h_1 d_{i-L+1} = 0 . \qquad \text{(A-1)}$$

Applying the transformation of Sec. 5.6, (A-1) becomes

$$h_1 c_i + h_2 c_{i-1} + \ldots + h_L c_{i-L+1} = 0 . \qquad \text{(A-2)}$$

The derivation of (A-2) is considered. After establishing (A-2), (A-1) can be obtained by applying a transformation to (A-2). The analysis is given below.

From (6) the following expressions are given

$$X_k = h_1 B_k + h_2 B_{k-1} + \ldots + h_L B_{k-L+1} + N_k \qquad \text{(A-3)}$$

$$X_{k-1} = h_1 B_{k-1} + h_2 B_{k-2} + \ldots + h_L B_{k-L} + N_{k-1} \qquad \text{(A-4)}$$

$$X_{k-2} = h_1 B_{k-2} + h_2 B_{k-3} + \ldots + h_L B_{k-L-1} + N_{k-2} \qquad \text{(A-5)}$$

From (A-4), B_{k-1} is found to be

$$B_{k-1} = (X_{k-1}-N_{k-1})/h_1 - (h_2/h_1)B_{k-2} - \ldots - (h_L/h_1)B_{k-L} . \quad \text{(A-6)}$$

Substituting (A-6) in (A-3), (A-3) becomes

$$X_k = h_1B_k + (h_2/h_1)(X_{k-1}-N_{k-1}) + N_k + [-(h_2{}^2/h_1) + h_3]B_{k-2}$$

$$+ \ldots - [(h_2h_L)/h_1]B_{k-L} \quad . \qquad \text{(A-7)}$$

Also, from (A-5) B_{k-2} is given as

$$B_{k-2} = (1/h_1)(X_{k-2}-N_{k-2}) - (h_2/h_1)B_{k-3}$$

$$- \ldots - (h_L/h_1)B_{k-L-1} \quad . \qquad \text{(A-8)}$$

Substituting (A-8) in (A-7) one obtains

$$X_k = h_1B_k + (h_2/h_1)(X_{k-1}-N_{k-1}) + N_k$$

$$+ [-(h_2/h_1)^2 + (h_3/h_1)](X_{k-2}-N_{k-2})$$

$$+ \ldots - (h_L/h_1)[-(h_2/h_1)^2 + h_3]B_{k-L-1} \quad . \qquad \text{(A-9)}$$

Compare (A-9) with (37). From this comparison it can be seen that

$$c_o = 1$$
$$c_1 = -(h_2/h_1)$$
$$c_2 = -[-(h_2/h_1)^2 + (h_3/h_1)] \quad . \qquad \text{(A-10)}$$

The equations in (A-10) can be rewritten in difference equation form as:

$$c_o = 1$$

$$h_1 c_1 + h_2 c_o = 0$$

$$h_1 c_2 + h_2 c_1 + h_3 c_o = 0. \qquad \text{(A-11)}$$

Assume that for any j, such that $j < L$,

$$c_{j-1} = (-1/h_1)(h_2 c_{j-2} + \ldots + h_j c_o), \qquad \text{(A-12)}$$

then the following equations apply

$$X_\alpha = h_1 B_\alpha + \sum_{i=1}^{\alpha-1} c_{\alpha-i}(N_i - X_i) + N_\alpha \qquad \text{(A-13)}$$

for all $\alpha \leq j$. Thus

$$B_\alpha = -\sum_{i=1}^{\alpha} (c_{\alpha-i}/h_1)(N_i - X_i) \qquad \text{(A-14)}$$

for all $\alpha \leq j$. From (6), for $j < L$,

$$X_{j+1} = h_1 B_{j+1} + h_2 B_j + h_3 B_{j-1} + \ldots + h_j B_2 + h_{j+1} B_1 + N_{j+1}. \qquad \text{(A-15)}$$

Using (A-14) in (A-15), the expression for X_{j+1} becomes

$$X_{j+1} = h_1 B_{j+1} - (h_2/h_1) \sum_{i=1}^{j} c_{j-i}(N_i - X_i)$$

$$- (h_3/h_1) \sum_{i=1}^{j-1} c_{j-i-1}(N_i - X_i)$$

$$- \ldots - (h_j/h_1) \sum_{i=1}^{2} c_{2-i}(N_i - X_i)$$

$$-(h_{j+1}/h_1)c_o(N_1 - X_1) + N_{j+1}. \quad \text{(A-16)}$$

After expanding (A-16) the coefficient of $(N_1 - X_1)$ is

$$-(h_2/h_1)c_{j-1} - (h_3/h_1)c_{j-2} - \ldots - (h_j/h_1)c_1 - (h_{j+1}/h_1)c_o. \quad \text{(A-17)}$$

By definition this equals c_j. Thus, by induction

$$c_{j-1} = (-1/h_1)(h_2 c_{j-2} + \ldots + h_j c_o) \quad \text{(A-18)}$$

for any $j \leq L$. In particular for $j = L$, the following equation has been established

$$h_1 c_{L-1} + h_2 c_{L-2} + \ldots + h_L c_o = 0 . \quad \text{(A-19)}$$

Now consider $j > L$ and assume that

$$c_{j-1} = (-1/h_1)(h_2 c_{j-2} + \ldots + h_L c_{j-L}) . \quad \text{(A-20)}$$

Then the following equation applies for all $\alpha \leq j$.

$$B_\alpha = \sum_{i=1}^{\alpha} (c_{\alpha-i}/h_1)(N_i - X_i) \ . \tag{A-21}$$

From (6)

$$X_{j+1} = h_1 B_{j+1} + h_2 B_j + \ldots + h_L B_{j-L+2} \ . \tag{A-22}$$

Using (A-21) in (A-22), the expression for X_{j+1} becomes

$$\begin{aligned} X_{j+1} = N_{j+1} + h_1 B_{j+1} &- (h_2/h_1) \sum_{i=1}^{j} c_{j-i}(N_i - X_i) \\ &- (h_3/h_1) \sum_{i=1}^{j-1} c_{j-i-1}(N_i - X_i) \\ &- \ldots - (h_L/h_1) \sum_{i=1}^{j-L+2} c_{j-i-L+2}(N_i - X_i) \ . \end{aligned} \tag{A-23}$$

After expanding (A-23) the coefficient of $(N_1 - X_1)$ is

$$-(h_2/h_1)c_{j-1} - (h_3/h_1)c_{j-2} - \ldots - (h_L/h_1)c_{j-L+1} \ . \tag{A-24}$$

By definition, this is equal to c_j. Thus

$$h_1 c_j + h_2 c_{j-1} + \ldots + h_L c_{j-L+1} = 0 \tag{A-25}$$

and (A-2) has been proven by induction. Apply the transformation (i) $\rightarrow$ k - (i) to (A-25) and change the variables from c_i to d_i. The following equation results:

$$h_L d_j + h_{L-1} d_{j-1} + \ldots + h_1 d_{j-L+1} = 0 \ . \tag{A-26}$$

This is the same as (A-1) and the difference equation is thus derived.

APPENDIX B

CONVERGENCE OF v^2

Necessary and sufficient conditions for the convergence, as $k \to \infty$, of $v^2 = \sum_{i=1}^{k} d_i^{\,2}$ are presented below. From Sec. 5.6,

$$v^2 = \sum_{i=1}^{k} d_i^{\,2} = \sum_{i=0}^{k-1} c_i^{\,2} \text{ and } \lim_{k\to\infty} v^2 = \sum_{i=0}^{\infty} c_i^{\,2}.$$

$$\sum_{i=0}^{\infty} c_i^{\,2} = \sum_{i=0}^{\infty} \sum_{j=1}^{L-1} F_j^{\,2}\, r_j^{\,2i} \cos^2(i\Theta_j + E_j)$$

$$+ \sum_{i=0}^{\infty} 2 \sum_{\substack{j=1 \\ \alpha\neq j}}^{L-1} \sum_{\alpha=1}^{L-1} F_j F_\alpha (r_j r_\alpha)^i \cos(i\Theta_j + E_j) \cdot \cos(i\Theta_\alpha + E_\alpha)$$

$$= \sum_{j=1}^{L-1} F_j^{\,2} \sum_{i=0}^{\infty} r_j^{\,2i} \cos^2(i\Theta_j + E_j)$$

$$+ 2 \sum_{\substack{j=1 \\ \alpha\neq j}}^{L-1} \sum_{\alpha=1}^{L-1} F_j F_\alpha \sum_{i=0}^{\infty} (r_j r_\alpha)^i \cos(i\Theta_j + E_j) \cdot \cos(i\Theta_\alpha + E_\alpha) \,. \quad \text{(B-1)}$$

Since $\sum_{i=0}^{\infty} (r_j^{\,2})^i \cos(i\Theta_j + E_j) \leq \sum_{i=0}^{\infty} (r_j^{\,2})^i$ (B-2)

and since $\sum_{i=0}^{\infty} (r_j^{\,2})^i$ converges if $r_j < 1$ each of the L-1 infinite series in the first term of the right hand side of (B-1) converges if, for all j, $-1 < r_j < 1$.

Also since

$$\sum_{i=0}^{\infty} (r_j r_\alpha)^i \cos(i\theta_j + E_j)\cos(i\theta_\alpha + E_\alpha) \leq \sum_{i=0}^{\infty} (r_j r_\alpha)^i \tag{B-3}$$

and since $\sum_{i=0}^{\infty} (r_j r_\alpha)^i$ converges if $|r_\alpha r_j| < 1$, each of the 2(L-1)(L-2) infinite series in the second term of the right hand side of (B-1) converge if, for all j, $-1 < r_j < 1$. Thus if the roots of the auxiliary equation fall within the unit circle in the z-plane v^2 will converge to some limit as k tends to ∞.

The convergence of $\sum_{i=0}^{\infty} c_i^{\,2}$ (or lack thereof) for the case in which one or more of the roots of the auxiliary equation fall on or outside the unit circle will now be investigated. Let $r_{j'} = \max_j \{r_j\}$ then

$$\sum_{i=0}^{\infty} (c_i/r_{j'})^2 = \sum_{i=0}^{\infty} F_{j'}^2 \cos^2(i\theta_{j'} + E_{j'}) + \sum_{i=0}^{\infty} \sum_{\substack{j=1 \\ j\neq j'}}^{L-1} F_j^{\,2} (r_j/r_{j'})^{2i} \cos^2(i\theta_j + E_j)$$

$$+2 \sum_{\substack{\alpha=1 \\ \alpha\neq j}}^{L-1} \sum_{j=1}^{L-1} \sum_{i=0}^{\infty} F_j F_\alpha (r_j r_\alpha / r_{j'}^{\,2})^i \cos(i\Theta_j + E_j)\cos(i\Theta_\alpha + E_\alpha) . \tag{B-4}$$

By arguments identical to those given above, all of the L-1 infinite series of the second term of the right hand side of (B-4) and the 2(L-1)(L-2) infinite series of the third term of the right hand side of (B-4) converge. It remains to investigate $F_{j'}^2 \sum_{i=0}^{\infty} \cos^2(i\Theta_j' + E_{j'})$.

Since $\cos^2(i\Theta_{j'} + E_{j'})$ is an undamped function the infinite series, $\sum_{i=0}^{\infty} (c_i/r_{j'})^2$, diverges [24]. Then by Thm. 39, p. 29 of Fort [27], $\sum_{i=0}^{\infty} c_i^{\,2}$ also diverges. Thus a necessary and sufficient condition for the convergence of v^2 is that the roots of (37) fall within the unit circle in the z-plane.

APPENDIX C

SUFFICIENT CONDITION FOR CONVERGENCE OF DIFFERENCE EQUATION SOLUTION

The problem is to find conditions under which the solution of the difference equation

$$c_{n+L-1} + a_1 c_{n+L-2} + \ldots + a_{L-1} c_n = 0 \qquad \text{(C-1)}$$

satisfies

$$\sum_{n=0}^{\infty} c_n^{\,2} < \infty.$$

Here $a_i = h_{i+1}/h_1$. The general solution of (C-1) is

$$\begin{aligned} c_n = {} & z_1^{\,n}(\alpha_{11} + n\alpha_{12} + \ldots + n^{m_1-1}\alpha_{1m_1}) \\ & + z_2^{\,n}(\alpha_{21} + n\alpha_{22} + \ldots + n^{m_2-1}\alpha_{2m_2}) \\ & + \ldots + z_k^{\,n}(\alpha_{k1} + n\alpha_{k2} + \ldots + n^{m_k-1}\alpha_{km_k}), \end{aligned}$$

where $z_1, \ldots, z_k$ are the distinct roots of

$$z^{L-1} + a_1 z^{L-2} + \ldots + a_{L-2} z + a_{L-1} = 0 \qquad \text{(C-2)}$$

with respective multiplicities $m_1, \ldots, m_k$ $(m_1 + \ldots + m_k = L-1)$

and the L-1 constants α_{ij} are determined by $c_o,\ldots,c_{L-2}$.

Rewrite c_n in the form

$$c_n = \alpha_1(n)z_1^{\,n} + \ldots + \alpha_k(n)z_k^{\,n},$$

where $\alpha_1(n),\ldots,\alpha_k(n)$ are polynomials in n. Then

$$c_n^{\,2} = \sum_{i=1}^{k} \alpha_i^{\,2}(n)z_i^{\,2n} + \sum_{1\le i<j\le k} \alpha_i(n)\alpha_j(n)z_i^{\,n}z_j^{\,n}. \qquad \text{(C-3)}$$

Since for any polynomial $\alpha(n)$ in n,

$$\sum_{n=0}^{\infty} \alpha(n)z^n < \infty \quad \text{if } |z| < 1,$$

a sufficient condition for convergence of $\sum_{n=0}^{\infty} c_n^{\,2}$ is, from (C-3), clearly that

$$|z_i| < 1, \; i = 1,\ldots,k,$$

i.e. that the roots of (C-2) lie inside the unit circle in the z-plane. (This condition is also generally necessary).

Consider the following theorem from complex variables: Rouche's Theorem: If f(z) and g(z) are analytic functions on a domain (open set) D together with its boundary C, and if $|f(z)| > |g(z)|$ for z on C, then f(z) and f(z) + g(z) have the same number of zeros in D.

To apply this, let

$$f(z) = z^{L-1}$$

$$g(z) = a_1 z^{L-2} + \ldots + a_{L-1}$$

$$D : |z| < 1$$

$$C : |z| = 1.$$

If $|a_1| + \ldots + |a_{L-1}| < 1$, then for $|z| = 1$, i.e. for z on C,

$$|g(z)| \leq |a_1| + \ldots + |a_{L-1}| < 1 = |f(z)|.$$

Therefore $f(z) + g(z)$ has the same number of zeros inside the unit circle as $f(z) = z^L$, i.e. L-1 zeros inside the unit circle. Then $|a_1| + \ldots + |a_{L-1}| < 1 \Longrightarrow$ all roots of (C-2) lie in the unit circle $\Longrightarrow \sum_{n=0}^{\infty} c_n^{\,2} < \infty$.

APPENDIX D

PROOF OF THEOREMS

Using the notation of Sec. 6.2, the proof of the theorems presented in that section are given below.

Thm. 1

a.) $p(X_{k+L+i} \mid B_k) = p(X_{k+L+i}) \quad i = 0,1,\ldots,N-K-1;$

b.) $p(X_{k-i} \mid B_k) = p(X_{k-i}) \quad i = 1,\ldots,k-1.$

Proof Part a:

$$p(X_{k+L+i} \mid B_k) =$$

$$= \sum_{B_{k+L+i}} \cdots \sum_{B_{k+i+1}} P(X_{k+L+i}, B_{k+i+1}, \ldots, B_{k+L+i} \mid B_k)$$

$$= \sum_{B_{k+L+i}} \cdots \sum_{B_{k+i+1}} P(B_{k+i+1}, \ldots, B_{k+L+i} \mid B_k)$$

$$\cdot\, p(X_{k+L+i} \mid B_{k+i+1}, \ldots, B_{k+L+i}, B_k).$$

By (6) and the assumption of independent inputs,

$$p(X_{k+L+i} \mid B_k) =$$

$$= \sum_{B_{k+L+1}} \cdots \sum_{B_{k+i+1}} P(B_{k+i+1},\ldots,B_{k+L+i})$$

$$\cdot\ p(X_{k+L+i} \mid B_{k+i+1},\ldots,B_{k+L+i})$$

$$= \sum_{B_{k+L+1}} \cdots \sum_{B_{k+i+1}} P(X_{k+L+i},B_{k+i+1},\ldots,B_{k+L+i})$$

$$= p(X_{k+L+i}) .$$

The above proof is valid if $k+L+i \leq N$. For $k+L+i > N$ a similar type of proof may be given. Theorem 1a is thus proved.

Proof Part b:

$$p(X_{k-i} \mid B_k) = \sum_{B_{k-i}} \cdots \sum_{B_{k-i-L+1}} p(X_{k-i},B_{k-i},\ldots,B_{k-i-L+1} \mid B_k)$$

$$= \sum_{B_{k-i}} \cdots \sum_{B_{k-i-L+1}} p(X_{k-i} \mid B_{k-i},\ldots B_{k-i-L+1},B_k)$$

$$\cdot\ p(B_{k-i},\ldots,B_{k-i-L+1} \mid B_k)$$

$$= \sum_{B_{k-i}} \cdots \sum_{B_{k-i-L+1}} p(X_{k-i} \mid B_{k-i},\ldots,B_{k-i-L+1})$$

$$\cdot\ P(B_{k-i},\ldots,B_{k-i-L+1})$$

$$= \sum_{B_{k-i}} \cdots \sum_{B_{k-i-L+1}} P(X_{k-i}, B_{k-i}, \ldots, B_{k-i-L+1})$$

$$= p(X_{k-i}) .$$

The above proof is valid if $k-i-L \geq 0$. For $k-i-L < 0$, a similar kind of proof may be given. Theorem 1 is thus proved.

Thm. 2

$$p(\hat{X}|\hat{\beta}) = p((X_{N+L-1})_j \mid (B)_j)\ p((X_{N+L-1})_k) .$$

Proof:

From the definitions of $(X_{N+L-1})_k$ and $(X_{N+L-1})_j$, $U_k \cap U_j = \phi$

Let $(\overline{B})_j = U_j - (B)_j$, then

$$p(\hat{X}|\hat{\beta}) = p((X_{N+L-1})_j, (X_{N+L-1})_k | (B)_j, (B)_M)$$

$$= \sum_{U_k} \sum_{(\overline{B})_j} P((X_{N+L-1})_j, (X_{N+L-1})_k, U_k, (\overline{B})_j | (B)_j, (B)_M)$$

$$= \sum_{U_k} \sum_{(\overline{B})_j} P(U_k, (\overline{B})_j | (B)_j, (B)_M)$$

$$\cdot\ p((X_{N+L-1})_j, (X_{N+L-1})_k | U_k, (\overline{B})_j, (B)_j, (B)_M) .$$

Since independent inputs are assumed,

$$P(U_k, (\overline{B})_j | (B)_j, (B)_M) = P(U_k) P((\overline{B})_j)$$

$$= P(U_k) P((\overline{B})_j | (B)_j) .$$

Also since U_k and U_j statistically specify $(X_{N+L-1})_j$ and $(X_{N+L-1})_k$ (by definition)

$$p((X_{N+L-1})_j, (X_{N+L-1})_k | U_k, (\bar{B})_j, (B)_j, (B)_M)$$

$$= p((X_{N+L-1})_j, (X_{N+L-1})_k | U_k, (\bar{B})_j, (B)_j).$$

Thus

$$p((X_{N+L-1})_j, (X_{N+L-1})_k | (B)_j, (B)_M) =$$

$$= \sum_{U_k} \sum_{(\bar{B})_j} P(U_k) P((\bar{B})_j | (B)_j)$$

$$p((X_{N+L-1})_j, (X_{N+L-1})_k | U_k, (\bar{B})_j, (B)_j)$$

$$= \sum_{U_k} \sum_{(\bar{B})_j} P(U_k) P((\bar{B})_j | (B)_j) p((X_{N+L-1})_j | U_k, (B)_j, (\bar{B})_j)$$

$$\cdot\ p((X_{N+L-1})_k | U_k, U_j, (X_{N+L-1})_j)$$

$$= \sum_{U_k} \sum_{(\bar{B})_j} P(U_k) P((\bar{B})_j | (B)_j) p((X_{N+L-1})_j | (B)_j, (\bar{B})_j)$$

$$\cdot\ p((X_{N+L-1})_k | U_k)$$

$$= \sum_{U_k} \sum_{(\bar{B})_j} P((X_{N+L-1})_j, (\bar{B})_j | (B)_j) P((X_{N+L-1})_k, U_k)$$

$$= \sum_{U_k} P((X_{N+L-1})_k, U_k) \sum_{(\bar{B})_j} P((X_{N+L-1})_j, (\bar{B})_j | (B)_j)$$

$$= \sum_{U_k} P((X_{N+L-1})_k, U_k) p((X_{N+L-1})_j | (B)_j)$$

$$= p((X_{N+L-1})_j | (B)_j) \sum_{U_k} P((X_{N+L-1})_k, U_k)$$

$$= p((X_{N+L-1})_j | (B)_j) p((X_{N+L-1})_k) \quad \text{q.e.d.}$$

Cor. 2.1 $\quad p((X_{k-i})_j | B_k) = p((X_{k-i})_j)$.

Proof: Let $(X_{k-i})_j$ be equal to $\hat{X}$ and let B_k be equal to $\hat{\beta}$ in Theorem 2. Note that $U_j \cap B_k = \phi$. Then

$$p(\hat{X} | \hat{\beta}) = p(X_{k-i})_j | B_k)$$

$$= \sum_{U_j} P((X_{k-i})_j, U_j | B_k)$$

$$= \sum_{U_j} P(U_j | B_k) p((X_{k-i})_j | B_k, U_j)$$

$$= \sum_{U_j} P(U_j) p((X_{k-i})_j | U_j) = \sum_{U_j} P((X_{k-i})_j, U_j)$$

$$= p((X_{k-i})_j) \qquad \text{q.e.d.}$$

Cor. 2.2

$$p(X_k)_U | B_K, (X_{k-\alpha})_j) = p((X_k)_U | (X_{k-\alpha})_j) .$$

Proof:

$$p((X_k)_U | B_k, (X_{k-\alpha})_j) = \frac{p((X_k)_U, (X_{k-\alpha})_j | B_k)}{p((X_{k-\alpha})_j | B_k)} .$$

Let $(X_k)_U \cup (X_{k-\alpha})_j = \hat{X}$ and let B_k be equal to $\hat{\beta}$ in Theorem 2. Note $(U_U \cup U_j) \cap B_k = \phi$. Then

$$\begin{aligned}
p(\hat{X}|\hat{\beta}) &= p(\hat{X}|B_k) \\
&= \sum_{U_U} \sum_{U_j} P(\hat{X}, U_U, U_j | B_k) \\
&= \sum_{U_U} \sum_{U_j} P(U_U, U_j | B_k) p(\hat{X} | B_k, U_U, U_j) \\
&= \sum_{U_U} \sum_{U_j} P(U_U, U_j) p(\hat{X} | U_U, U_j) \\
&= \sum_{U_U} \sum_{U_j} P(\hat{X}, U_U, U_j) \\
&= p(\hat{X}) .
\end{aligned}$$

Also, by Cor. 2.1,

$$p((X_{k-\alpha})_j | B_k) = p((X_{k-\alpha})_j) .$$

Therefore

$$p((X_k)_U|B_k,(X_{k-\alpha})_j) = \frac{p((X_k)_U,(X_{k-\alpha})_j)}{p((X_{k-\alpha})_j)}$$

$$= p((X_k)_U|(X_{k-\alpha})_j) \qquad \text{q.e.d.}$$

Note in the course of proving Cor. 2.2 the following relationships were established:

$$p((X_k)_U,(X_{k-\alpha})_j|B_k) = p((X_k)_U,(X_{k-\alpha})_j); \tag{D-1}$$

$$p((X_k)_U|B_k) = p((X_k)_U). \tag{D-2}$$

Cor. 2.3

$$p(X_k|\underline{X}_{k-1},B_k,X_{k+L},\ldots,X_{N+L-1}) = C_4 p(X_k|\underline{X}_{k-1},B_k).$$

Proof:

$$p(X_k|\underline{X}_{k-1},B_k,X_{k+L},\ldots,X_{N+L-1}) = \frac{p(\underline{X}_k,X_{k+L},\ldots,X_{N+L-1}|B_k)}{p(\underline{X}_{k-1},X_{k+L},\ldots,X_{N+L-1}|B_k)}.$$

Now, by Theorem 2,

$$p(\underline{X}_k,X_{k+L},\ldots,X_{N+L-1}|B_k) = p(\underline{X}_k|B_k)p(X_{k+L},\ldots,X_{N+L-1}).$$

Also, $p(\underline{X}_k|B_k) = p(X_k|\underline{X}_{k-1},B_k)p(\underline{X}_{k-1}|B_k)$.

By Cor. 2.1, $p(\underline{X}_{k-1}|B_k) = p(\underline{X}_{k-1})$. From (D-1),

$$p(\underline{X}_{k-1}, X_{k+L}, \ldots, X_{N+L-1}|B_k) = p(\underline{X}_{k-1}, X_{k+L}, \ldots, X_{N+L-1}) .$$

Thus $p(X_k|\underline{X}_{k-1}, B_k, X_{k+L}, \ldots, X_{N+L-1}) =$

$$\frac{p(X_k|\underline{X}_{k-1}, B_k)\, p(\underline{X}_{k-1})\, p(X_{k+L}, \ldots, X_{N+L-1})}{p(\underline{X}_{k-1}, X_{k+L}, \ldots, X_{N+L-1})}$$

$$= C_4 p(X_k|\underline{X}_{k-1}, B_k)$$

where

$$C_4 = \frac{p(\underline{X}_{k-1})\, p(X_{k+L}, \ldots, X_{N+L-1})}{p(\underline{X}_{k-1}, X_{k+L}, \ldots, X_{N+L-1})} .$$

C_4 is independent of the value of B_k. q.e.d.

Cor. 2.4:

$$p(X_{k+L-1}|\underline{X}_{k-1}, B_k, X_{k+L}, \ldots, X_{N+L-1})$$

$$= C_5\, p(X_{k+L-1}|B_k, X_{k+L}, \ldots, X_{N+L-1}) .$$

Proof:

$$p(X_{k+L-1}|\underline{X}_{k-1}, B_k, X_{k+L}, \ldots, X_{N+L-1}) =$$

$$\frac{p(X_{k+L-1}, \underline{X}_{k-1}, X_{k+L}, \ldots, X_{N+L-1}|B_k)}{P(\underline{X}_{k-1}, X_{k+L}, \ldots, X_{N+L-1}|B_k)} .$$

From Thm.2

$$p(\underline{X}_{k-1}, X_{k+L-1}, \ldots, X_{N+L-1} | B_k) =$$

$$p(X_{k+L-1}, \ldots, X_{N+L-1} | B_k) P(\underline{X}_{k-1})$$

and from (D-1),

$$p(\underline{X}_{k-1}, X_{k+L}, \ldots, X_{N+L-1} | B_k) =$$

$$p(\underline{X}_{k-1}, X_{k+L}, \ldots, X_{N+L-1}) .$$

Also $p(X_{k+L-1}, \ldots, X_{N+L-1} | B_k) =$

$$p(X_{k+L-1} | X_{k+L}, \ldots, X_{N+L-1}, B_k)$$

$$\cdot \; p(X_{k+L}, \ldots, X_{N+L-1} | B_k) .$$

Using (D-2),

$$p(X_{k+L}, \ldots, X_{N+L-1} | B_k) = p(X_{k+L}, \ldots, X_{N+L-1}) .$$

Thus $p(X_{k+L-1} | \underline{X}_{k-1}, B_k, X_{k+L}, \ldots, X_{N+L-1})$

$$= \frac{p(X_{k+L-1} | B_k, X_{k+L}, \ldots, X_{N+L-1}) p(X_{k+L}, \ldots, X_{N+L-1}) p(\underline{X}_{k-1})}{p(\underline{X}_{k-1}, X_{k+L}, \ldots, X_{N+L-1})}$$

$$= C_5 p(X_{k+L-1} | B_k, X_{k+L}, \ldots, X_{N+L-1})$$

where $C_5 = \dfrac{p(X_{k+L},\ldots,X_{N+L-1})\,p(\underline{X}_{k-1})}{p(\underline{X}_{k-1},X_{k+L},\ldots,X_{N+L-1})}$

is a quantity independent of the value of B_k and the corollary is proved.

Thm. 3: $p(X_{k+L-1}|\underline{X}_k,B_k,X_{k+L},\ldots,X_{N+L-1})$

$$= p(X_{k+L-1}|B_k,X_{k+L},\ldots,X_{N+L-1}).$$

Proof:

Note, throughout this proof it will be assumed that the B_i are statistically independent.

$$p(X_{k+L-1}|\underline{X}_k,B_k,X_{k+L},\ldots,X_{N+L-1}) = \frac{p(X_{k+L-1},\ldots,X_{N+L-1}|\underline{X}_k,B_k)}{p(X_{k+L},\ldots,X_{N+L-1}|\underline{X}_k,B_k)} \quad ; \tag{D-3}$$

$$p(X_{k+L-1},\ldots,X_{N+L-1}|\underline{X}_k,B_k) =$$

$$= \sum_{B_{k+1}}\cdots\sum_{B_N} p(X_{k+L-1},\ldots,X_{N+L-1},B_{k+1},\ldots,B_N|\underline{X}_k,B_k)$$

$$= \sum_{B_{k+1}}\cdots\sum_{B_N} p(X_{k+L-1},\ldots,X_{N+L-1}|B_k,\ldots,B_N,\underline{X}_k)$$

$$\cdot\ p(B_{k+1},\ldots,B_N|\underline{X}_k,B_k). \tag{D-4}$$

$$P(B_{k+1},\ldots,B_N|\underline{X}_k,B_k) = \frac{P(B_{k+1},\ldots,B_N,\underline{X}_k|B_k)}{p(\underline{X}_k|B_k)}$$

$$= \frac{P(B_{k+1},\ldots,B_N)\,p(\underline{X}_k|B_k,\ldots,B_N)}{p(\underline{X}_k|B_k)} \quad . \tag{D-5}$$

Now
$$\begin{aligned}
p(\underline{X}_k|B_k,\ldots,B_N) &= \sum_{B_1}\cdots\sum_{B_{k-1}} P(\underline{X}_k,\underline{B}_{k-1}|B_k,\ldots,B_N) \\
&= \sum_{B_1}\cdots\sum_{B_{k-1}} p(\underline{X}_k|\underline{B}_N)P(\underline{B}_{k-1}|B_k,\ldots,B_N) \\
&= \sum_{B_1}\cdots\sum_{B_{k-1}} p(\underline{X}_k|\underline{B}_k)P(\underline{B}_{k-1}|B_k) \\
&= \sum_{B_1}\cdots\sum_{B_{k-1}} P(\underline{X}_k,\underline{B}_{k-1}|B_k) \\
&= p(\underline{X}_k|B_k) \quad . \qquad \text{(D-6)}
\end{aligned}$$

Substituting (D-6) in (D-5)

$$P(B_{k+1},\ldots,B_N|\underline{X}_k,B_k) = P(B_{k+1},\ldots,B_N) \quad . \tag{D-7}$$

Now substituting (D-7) in (D-4) and noting that

$P(B_{k+1},\ldots,B_N) = P(B_{k+1},\ldots,B_N|B_k)$ and

$p(X_{k+L-1},\ldots,X_{N+L-1}|B_k,\ldots,B_N,\underline{X}_k) =$

$p(X_{k+L-1},\ldots,X_{N+L-1}|B_k,\ldots,B_N)$, one obtains

$$p(X_{k+L-1},\ldots,X_{N+L-1}|\underline{X}_k,B_k) =$$

$$= \sum_{B_{k+1}} \cdots \sum_{B_N} p(X_{k+L-1},\ldots,X_{N+L-1}|B_k,\ldots,B_N)$$

$$\cdot\ P(B_{k+1},\ldots,B_N|B_k)$$

$$= \sum_{B_{k+1}} \cdots \sum_{B_N} P(X_{k+L-1},\ldots,X_{N+L-1},B_{k+1},\ldots B_N|B_k)$$

$$= p(X_{k+L-1},\ldots,X_{N+L-1}|B_k)\,. \qquad \text{(D-8)}$$

Examining the denominator of (D-3)

$$p(X_{k+L},\ldots,X_{N+L-1}|\underline{X}_k,B_k)$$

$$= \sum_{B_{k+1}} \cdots \sum_{B_N} P(X_{k+L},\ldots,X_{N+L-1},B_{k+1},\ldots,B_N|\underline{X}_k,B_k)$$

$$= \sum_{B_{k+1}} \cdots \sum_{B_N} p(X_{k+L},\ldots,X_{N+L-1}|\underline{X}_k,B_k,\ldots,B_N)$$

$$\cdot\ P(B_{k+1},\ldots,B_N|\underline{X}_k,B_k)\,. \qquad \text{(D-9)}$$

$$P(B_{k+1},\ldots,B_N|\underline{X}_k,B_k) = \frac{P(\underline{X}_k,B_{k+1},\ldots,B_N|B_k)}{p(\underline{X}_k|B_k)}$$

$$= \frac{P(B_{k+1},\ldots,B_N|B_k)\,p(\underline{X}_k|B_k,\ldots,B_N)}{P(\underline{X}_k|B_k)}\,.$$

Using (D-6)

$$P(B_{k+1},\ldots,B_N|\underline{X}_k,B_k) = P(B_{k+1},\ldots,B_N). \tag{D-10}$$

Using (D-10) in (D-9) and noting that

$$p(X_{k+L},\ldots,X_{N+L-1}|\underline{X}_k,B_k,\ldots,B_N) =$$

$$p(X_{k+L},\ldots,X_{N+L-1}|B_{k+1},\ldots,B_N) \text{ one obtains}$$

$$p(X_{k+L},\ldots,X_{N+L-1}|\underline{X}_k,B_k) =$$

$$\sum_{B_{k+1}}\cdots\sum_{B_N} p(X_{k+L},\ldots,X_{N+L-1}|B_{k+1},\ldots,B_N)$$

$$\cdot\ P(B_{k+1},\ldots,B_N)$$

$$= \sum_{B_{k+1}}\cdots\sum_{B_N} P(X_{k+L},\ldots,X_{N+L-1},B_{k+1},\ldots,B_N)$$

$$= p(X_{k+L},\ldots,X_{N+L-1}). \tag{D-11}$$

Substituting (D-11) and (D-8) in (D-3)

$$p(X_{k+L-1}|\underline{X}_k,B_k,X_{k+L},\ldots,X_{N+L-1}) = \frac{p(X_{k+L-1},\ldots,X_{N+L-1}|B_k)}{p(X_{k+L},\ldots,X_{N+L-1})}$$

$$= \frac{p(X_{k+L-1}|B_k,X_{k+L},\ldots,X_{N+L-1})\,p(X_{k+L},\ldots,X_{N+L-1}|B_k)}{p(X_{k+L},\ldots,X_{N+L-1})}.$$

By (D-2) $p(X_{k+L},\ldots,X_{N+L-1}|B_k) = p(X_{k+L},\ldots,X_{N+L-1})$.

Thus $p(X_{k+L-1}|\underline{X}_k,B_k,X_{k+L},\ldots,X_{N+L-1}) =$

$$p(X_{k+L-1}|B_k,X_{k+L},\ldots,X_{N+L-1}) \quad \text{q.e.d.}$$

REFERENCES

1. Nyquist, H., "Certain topics in telegraph transmission theory," Transactions of the AIEE, vol. 47, pp. 617-644, April 1928.

2. Wozencraft, J. M., and Jacobs, I. M., Principles of Communication Engineering. New York: John Wiley & Sons, Inc., 1965.

3. Lucky, R. W., Salz, J., and Weldon, E. J., Jr., Principles of Data Communication. New York: McGraw-Hill, 1968.

4. Sunde, E. D., "Theoretical fundamentals of pulse transmission—Pt. II," Bell System Technical Journal, vol. 33, pp. 987-1010, July 1954.

5. Gerst, I. and Diamond, J., "The elimination of intersymbol interference by input signal shaping," Proceedings IRE, vol. 49, pp. 1195-1203, July 1961.

6. Kretzmer, E. R., "Generalization of a technique for binary data communication," IEEE Transactions on Communication Technology, vol. COM-14, pp. 67,68, Feb. 1966.

7. Lender, A., "Correlative level coding for binary data transmission," IEEE Spectrum, vol. 3, pp. 104-115, Feb. 1966.

8. Howson, R. D., "An analysis of the capabilities of polybinary data transmission," IEEE Transactions on Communication Technology, vol. COM-13, pp. 312-319, September 1965.

9. DiToro, M. J., "Communication in time-frequency spread media using adaptive equalization," Proceedings of the IEEE, vol. 56, pp. 1653-1679, October 1968.

10. Lebow, I. L., McHugh, P. G., Parker, A. C., Rosen, P., and Wozencraft, J. M., "Application of sequential decoding to high-rate data communication on a telephone line," IEEE Transactions on Information Theory (Correspondence), vol IT-9, pp. 124-126, April 1963.

11. Bennett, W. R., "Synthesis of active networks," Proceedings of the Symposium on Modern Network Synthesis. pp. 45-61, New York, April 1955.

12. Austin, M. E., Decision-Feedback Equalization for Digital Communication over Dispersive Channels, Tech. Rept. #461, Research Laboratory of Electronics, MIT, Cambridge, Mass., August 1967.

13. Lucky, R. W., "Automatic equalization for digital communication," Bell System Technical Journal, vol. 44, pp. 547-588, April 1965.

14. _____, "Techniques for adaptive equalization of digital communication," Bell System Technical Journal, vol. 45, pp. 255-286, February 1966.

15. Niessen, C. W. and Drouilhet, P. R., Jr., "Adaptive equalizer for pulse transmission," 1967 IEEE International Conference on Communications, Digest of Technical Papers (Minneapolis, Minn., June 12-14, 1967), p. 117.

16. Proakis, J. G. and Miller, J. H., "An adaptive receiver for digital signaling through channels with intersymbol interference," IEEE Transactions on Information Theory, vol. IT-15, pp. 484-497, July 1969.

17. Aein, J. M. and Hancock, J. C., "Reducing the effects of intersymbol interference with correlation receivers," IEEE Transactions on Information Theory, vol. IT-9, pp. 167-175, July 1963.

18. Chang, R. W. and Hancock, J. C., "On receiver structures for channels having memory," IEEE Transactions on Information Theory, vol. IT-12, pp. 463-468, October 1966.

19. Sunde, E. D., "Theoretical fundamentals of pulse transmission—Pt. I," Bell System Technical Journal, vol. 33, pp. 721-788, May 1954.

20. Abend, K., "Compound decision procedures for unknown distributions and for dependent states of nature," Pattern Recognition. L. N. Kanal ed., Washington, D. C.: Thompson, 1968.

21. Abend, K., Harley, T. J., Fritchman, B. D., and Gumacos, C., "On optimum receivers for channels having memory," IEEE Transactions on Information Theory (Correspondence), vol. IT-14, pp. 819-820, November 1968.

22. Bowen, R. R., "Bayesian decision procedure for interfering digital signals," IEEE Transactions on Information Theory (Correspondence), vol. IT-15, pp. 506-507, July 1969.

23. Helstrom, C. W., Statistical Theory of Signal Detection. New York: Macmillian Co., 1960.

24. Goldberg, S., Introduction to Difference Equations. New York: John Wiley & Sons, Inc. 1958.

25. Marden, M., The Geometry of the Zeros of a Polynomial in a Complex Variable. New York: American Mathematical Society, 1949.

26. Jury, E. I., Sampled-Data Control Systems. New York: John Wiley & Sons, Inc., 1958.

27. Fort, T., Infinite Series. Oxford: Oxford University Press, 1930.

UNCLASSIFIED
Security Classification

DOCUMENT CONTROL DATA – R & D
(Security classification of title, body of abstract and indexing annotation must be entered when the overall report is classified)

1. ORIGINATING ACTIVITY *(Corporate author)*
Computer Science Center
University of Maryland
College Park, Maryland 20742

2a. REPORT SECURITY CLASSIFICATION
Unclassified

2b. GROUP

3. REPORT TITLE
Performance of Optimum Detector Structures For Noisy Intersymbol Interference Channels

4. DESCRIPTIVE NOTES *(Type of report and inclusive dates)*
Technical Report September 1970 - August 1971

5. AUTHOR(S) *(First name, middle initial, last name)*
J. D. Womer, B. D. Fritchman and L. N. Kanal

6. REPORT DATE
August 1971

7a. TOTAL NO. OF PAGES
190

7b. NO. OF REFS
27

8a. CONTRACT OR GRANT NO.
AFOSR71-1982

b. PROJECT NO.

c.

d.

9a. ORIGINATOR'S REPORT NUMBER(S)

9b. OTHER REPORT NO(S) *(Any other numbers that may be assigned this report)*

10. DISTRIBUTION STATEMENT
Distribution of this document is unlimited

11. SUPPLEMENTARY NOTES

12. SPONSORING MILITARY ACTIVITY Math. & Info. Sciences, AFOSR, Air Force Systems Command, 1400 Wilson Blvd. Arlington, Virginia 22209

13. ABSTRACT
When transmitting digital information by radio or wireline systems, errors may arise from additive noise and from successively transmitted signals interfering with one another. This report presents new results on evaluating the probability of error, i.e. performance, of optimum detector structures which are obtained when compound statistical decision theory is used to unravel noisy intersymbol interference patterns in the received signal. It includes a comparative study of the performance of certain detector structures and approximations to them, and the performance of a transversal equalizer. The report also shows that the optimum compound statistical decision procedure is not equivalent, either to subtracting out the interfering energy from the received signal, or to gathering together the energy which is dispersed throughout the received signal.

DD FORM 1 NOV 65 1473

UNCLASSIFIED
Security Classification

182

UNCLASSIFIED
Security Classification

DOCUMENT CONTROL DATA – R & D
(Security classification of title, body of abstract and indexing annotation must be entered when the overall report is classified)

1. ORIGINATING ACTIVITY *(Corporate author)*
Computer Science Center
University of Maryland
College Park, Maryland 20742

2a. REPORT SECURITY CLASSIFICATION
Unclassified

2b. GROUP

3. REPORT TITLE
Performance of Optimum Detector Structures For Noisy Intersymbol Interference Channels

4. DESCRIPTIVE NOTES *(Type of report and inclusive dates)*
Technical Report September 1970 - August 1971

5. AUTHOR(S) *(First name, middle initial, last name)*
J. D. Womer, B. D. Fritchman and L. N. Kanal

6. REPORT DATE
August 1971

7a. TOTAL NO. OF PAGES
190

7b. NO. OF REFS
27

8a. CONTRACT OR GRANT NO.
AFOSR71-1982

b. PROJECT NO.

c.

d.

9a. ORIGINATOR'S REPORT NUMBER(S)

9b. OTHER REPORT NO(S) *(Any other numbers that may be assigned this report)*

10. DISTRIBUTION STATEMENT
Distribution of this document is unlimited

11. SUPPLEMENTARY NOTES

12. SPONSORING MILITARY ACTIVITY Math. & Info. Sciences, AFOSR, Air Force Systems Command, 1400 Wilson Blvd. Arlington, Virginia 22209

13. ABSTRACT
When transmitting digital information by radio or wireline systems, errors may arise from additive noise and from successively transmitted signals interfering with one another. This report presents new results on evaluating the probability of error, i.e. performance, of optimum detector structures which are obtained when compound statistical decision theory is used to unravel noisy intersymbol interference patterns in the received signal. It includes a comparative study of the performance of certain detector structures and approximations to them, and the performance of a transversal equalizer. The report also shows that the optimum compound statistical decision procedure is not equivalent, either to subtracting out the interfering energy from the received signal, or to gathering together the energy which is dispersed throughout the received signal.

DD FORM 1 NOV 65 1473

UNCLASSIFIED
Security Classification