2-8

(NASA-CR-115718) LABORATORY VERIFICATION RESPIRATORY MEASUREMENTS. IMBLMS PHASE B.4, APPENDIX C, SECTION 13 Final Report (Lockheed Missiles and Space Co.) 11 Dec. 1970 23 p CSCL 06P G3/04

N72-28050

Unclas 35863

Lockheed

MISSILES & SPACE COMPANY

A GROUP DIVISION OF LOCKHEED AIRCRAFT CORPORATION

SUNNYVALE, CALIFORNIA

Reproduced by
NATIONAL TECHNICAL INFORMATION SERVICE
US Department of Commerce
Springfield, VA. 22151

23

CR-115718

LABORATORY VERIFICATION -

RESPIRATORY MEASUREMENTS

IMBLMS PHASE B.4 FINAL REPORT

APPENDIX C SECTION 13

LMSC A980463

11DECEMBER 1970

LOCKHEED MISSILES & SPACE CO.

NAS 9-10742

TABLE OF CONTENTS

BRIEF SUMMARY	3
OBJECTIVES	3
PROPOSED METHOD	3
EQUIPMENT	4
LAB PROCEDURE	11
RESULTS	13
CONCLUSIONS	21

ILLUSTRATIONS

FIGURE		
1	SCHEMATIC PLUMBING DIAGRAM	5
2	MECHANICAL-ELECTRICAL CONTROL INTERFACES	7
2a	SCANIVALVE CONTROL	8
3	MODIFICATIONS TO SPIROMETER ELECTRONICS	9
4	PHOTO OF THE APPARATUS IN USE	12
5	CHART RECORDING SHOWING DELAY AND RESPONSE TIMES	14
6	CHART RECORDING SHOWING NORMAL BREATHING AND REBREATHING	16
7	VENOUS AND ARTERIAL BLOOD CO_2 DISSOCIATION CURVES	18
8	CHART RECORDING FOR FLOW AND VOLUME COMPARISON	20

BRIEF SUMMARY

The Lockheed B-4 IMBLMS preliminary design of the Respiratory Measurement Element includes certain techniques and apparatus which are quite different from those included in the B-3 version previously delivered to NASA-MSC. Lockheed Biotechnology constructed a working model in its laboratory to prove feasibility of certain key features. The most critical of these is the capability of switching sample gases into the mass spectrometer from two different sources during a single breath cycle. Results proved feasibility of all of the concepts which were tested, and certain refinements and improvements were included, as well.

OBJECTIVES

To construct and operate in the laboratory an operating prototype of the principal portion of the Respiratory Measurement Element. This will include the apparatus for measuring pulmonary flows, volumes and continuous analysis of any one gas. The special purpose valves and re-breathing bag for the indirect determination of cardiac output are to be included. Solenoid valves will be triggered by special electronics in this prototype.

The principal purposes of this task are:

A. To determine parameters affecting the subject interface such as resistance to breathing.

B. To demonstrate the essential synchronization of switching between sampling points within a single breath cycle.

C. To ascertain the effects of gas dilution in the breathing ducts and sampling lines.

D. To find and solve problems involving the manual valve used for performing the indirect cardiac output measurement.

E. To make a direct comparison of the flow rate and volume signals of the flowmeter (with integration) versus those of the spirometer (with differentiation).

PROPOSED METHOD

The proposed method was to assemble in the Lockheed Biotechnology Laboratory, an operating respiratory measurement apparatus (RMA) which would not include all of the capabilities for measuring the 26 different quantities required for the flight version, but which would demonstrate the ability to perform certain crucial measurements. It was decided to actually measure the minute alveolar ventilation ($\dot{V}_A$ min) and indirect

cardiac output (Q) of one or more persons. These measurements, in turn, require the determination of fractional concentration of CO_2 in the end-tidal sample ($F_{A_{CO_2}}$), fractional concentration of CO_2 in the mixed, collected expired breath ($F_{E_{CO_2}}$), equilibrium CO_2 concentration during re-breathing, inspired volume (V_I), and expired volume (V_E). The most critical aspect of making these measurements is that they are taken breath-by-breath. This requires that the delay time in transporting the gas sample to the mass spectrometer, plus the response time of the mass spectrometer itself, must be fast enough to permit analysis of the sample being drawn at the mouthpiece right up to the end of expiration in order to obtain the end-tidal analysis and then, during inspiration, to analyze the mixed expired gas being dumped from the spirometer.

In addition to the above measurements, a comparison was to be made between the flow rate signal from the flowmeter, and that derived from the spirometer.

It would have been desirable to analyze for two or more gas components simultaneously, but Lockheed's Hitachi/Perkin-Elmer Mass Spectrometer does not have this capability. Lockheed requested the loan of a spaceflight oriented mass spectrometer from NASA; this would have enabled simultaneous monitoring of nitrogen, oxygen, and carbon dioxide. However, this type of mass spectrometer was not made available, so it was decided to monitor carbon dioxide only.

EQUIPMENT

Lockheed's laboratory mass spectrometer is a very large instrument, having high sensitivity and resolution. However, in its normal use, there is no requirement for an ultrafast response. Since the IMBLMS RMA does require a very fast response, certain modifications had to be made. These consisted of introducing the sample gas into the mass spectrometer much closer to the ion source chamber than normally, and of installing a new leak orifice 3.3 microns in diameter. Installation of this leak orifice enabled the relatively high sample flow rate of 230 milliliters per minute to be directed toward the leak orifice, thereby reducing transit time required for the gas to travel from the sampling points to the leak orifice. See Figure 1. Note that the sample lines from the mouthpiece and from the spirometer are directed into a Model WS3-12, WO 601/6P2T rotary Scanivalve V-8. This plumbing is arranged in such

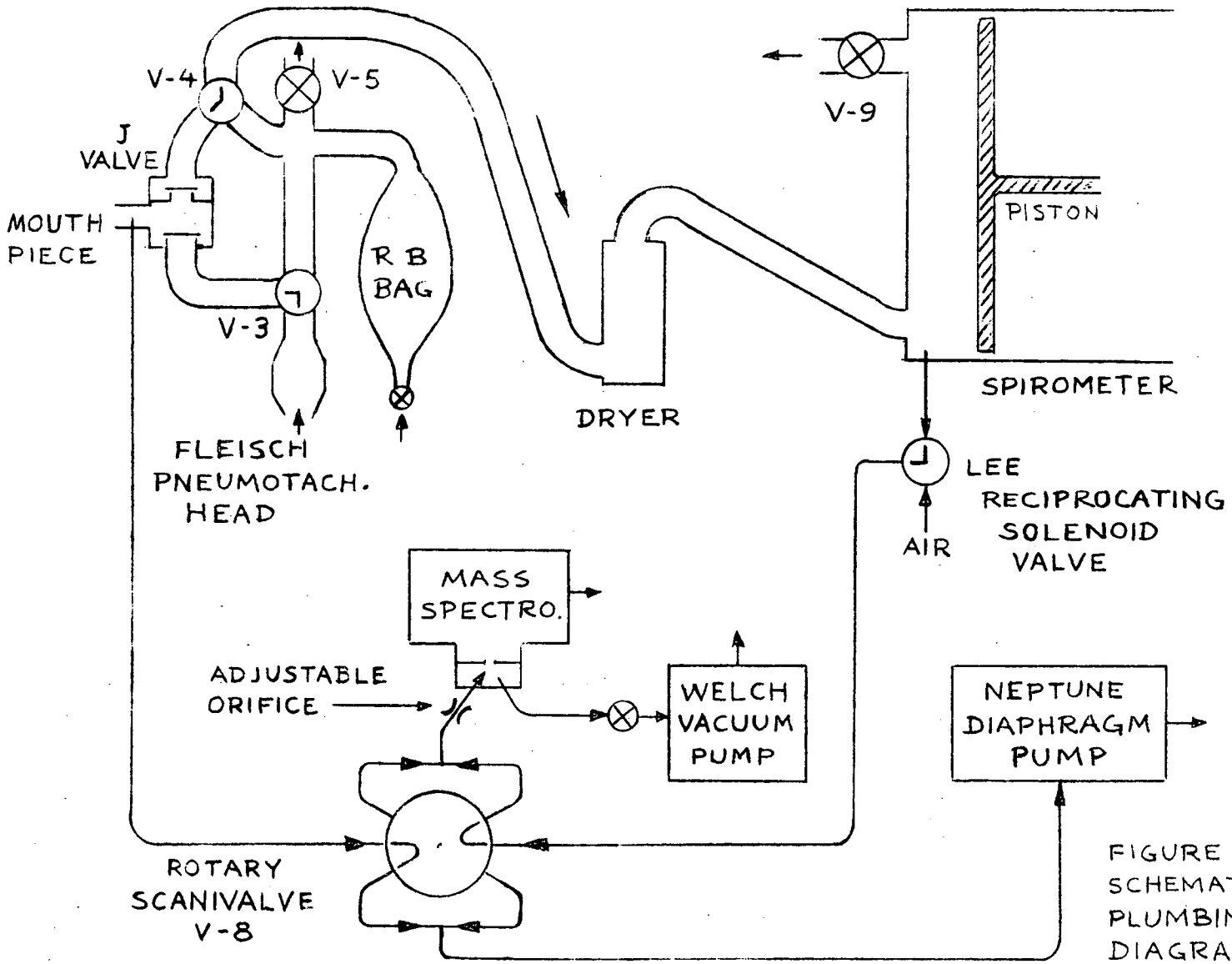

FIGURE 1.
SCHEMATIC
PLUMBING
DIAGRAM

a way that while the sample to be analyzed is being routed into the mass spectrometer, the other sample is being routed to a Neptune Model 2 diaphragm pump at a flow rate of 200 ml per minute. The flow rate past the mass spectrometer and into the Welch Model 1402 vacuum pump is 230 ml per minute.

The use of this arrangement with two parallel sampling inlet lines and two parallel sampling exhaust lines interconnected through switching valve V-8 results in a great advantage. This advantage is continuous flow from both sampling points so that each time V-8 switches, the mass spectrometer immediately has available a recent sample without having to wait for the transit time required to travel from the original sampling point to V-8.

Another switching valve, the Lee solenoid valve Model LIF-180 D 3A 12, is used where the sample is obtained at the spirometer (Airco Ohio Model 830). The Lee valve is used to draw the sample either from inside the spirometer, or external ambient air. The advantages of this configuration are (1) no sample is drawn from inside the spirometer except during dump; (2) the internal spirometer sample can be drawn starting immediately at the end of expiration. This latter point is important because it is desirable to continue feeding the mouthpiece sample into the mass spectrometer until the end-tidal sample has been analyzed and then to start analyzing the spirometer dump sample as soon as possible. This is accomplished by employing an electronic delay between the end of spirometer piston travel (end of expiration) at which time the Lee valve switches from external air to internal, and the start of two simultaneous events: the opening of spirometer dump valve V-9 and the switching of V-8. When the spirometer completes its dump, the piston actuates a switch which initiates three actions: closing of the dump valve, indexing of Scanivalve V-8, and de-energizing of the Lee valve. The interconnections between these and other components are shown in Figures 2, 2a, and 3.

As a consequence of the delay between actuation of the Lee valve and the Scanivalve V-8, the internal spirometer sample has already started to arrive at V-8 before V-8 has been switched to send the spirometer sample to the mass spectrometer. This results in an extremely short delay time in obtaining the analysis of the mixed expired spirometer sample, which in turn makes it feasible to use a very rapid spirometer dump, and enables the subject to breathe rapidly without fear of outpacing the equipment.

The spirometer dump valve designated V-9 was designed and built by Lockheed for this application. It consists of 5 circular holes arranged around a central motor drive which moves 5 vanes, each of which covers or uncovers one of the holes. It was found that only two holes were needed for a sufficiently fast dump, so the other three were taped shut. The AC gear motor is a

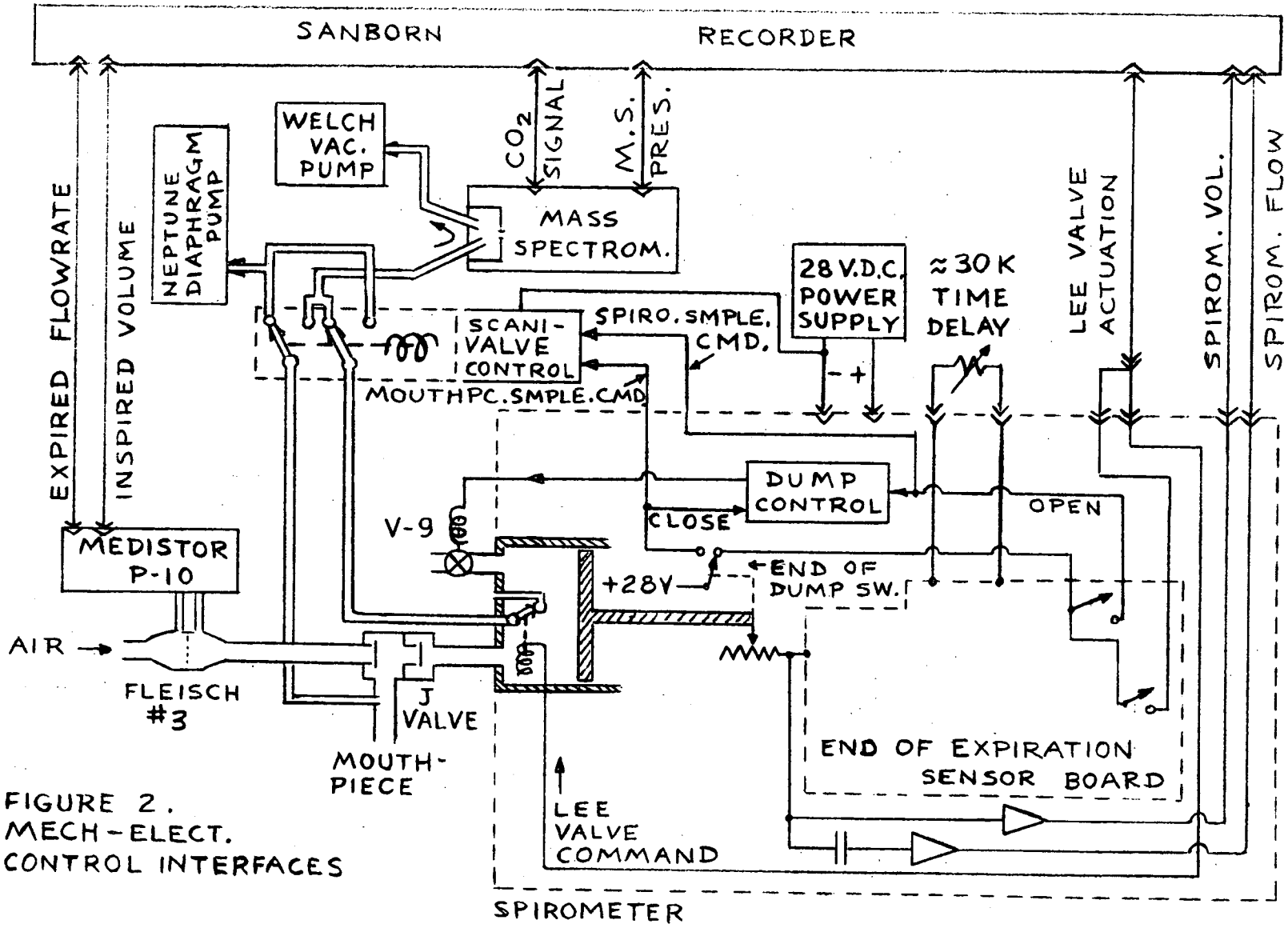

FIGURE 2.
MECH-ELECT.
CONTROL INTERFACES

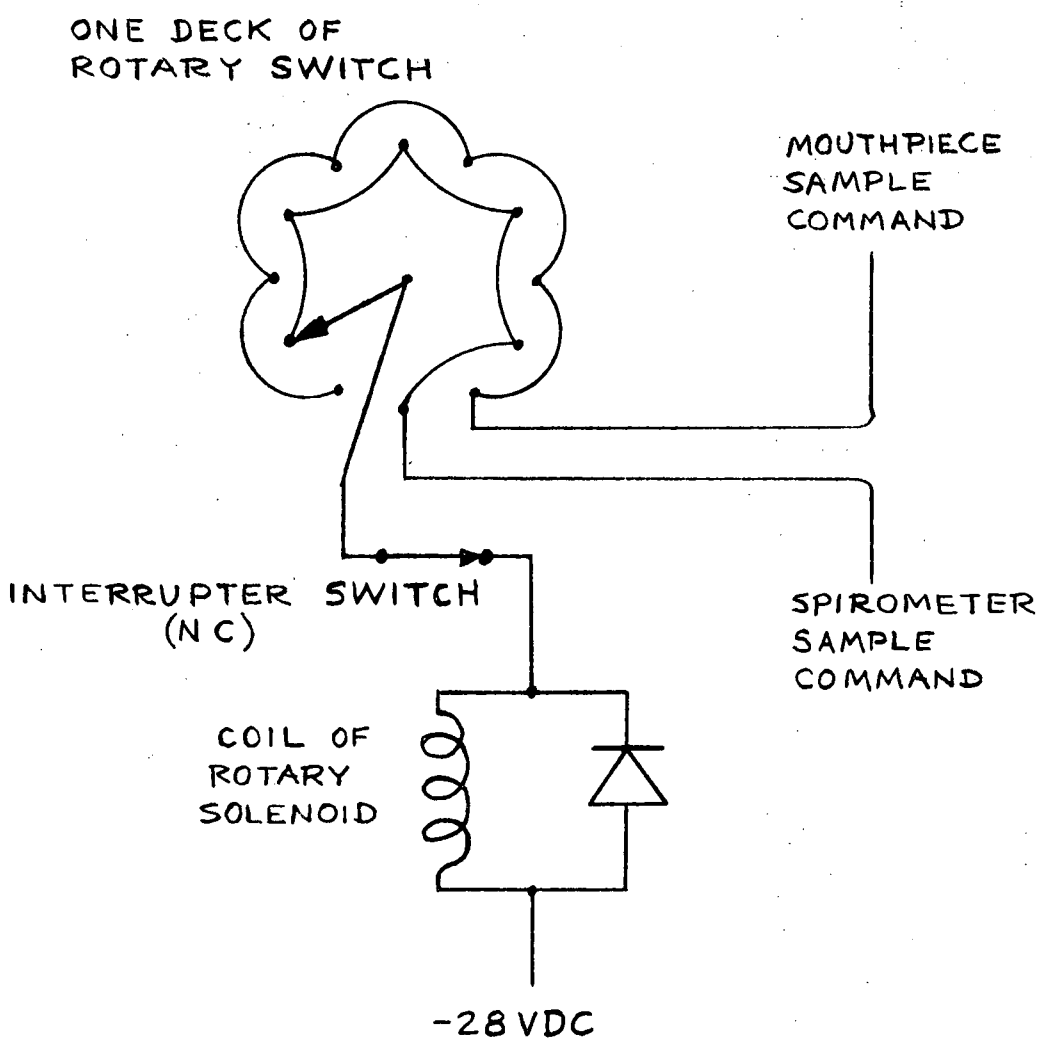

FIGURE 2-a. SCANIVALVE CONTROL

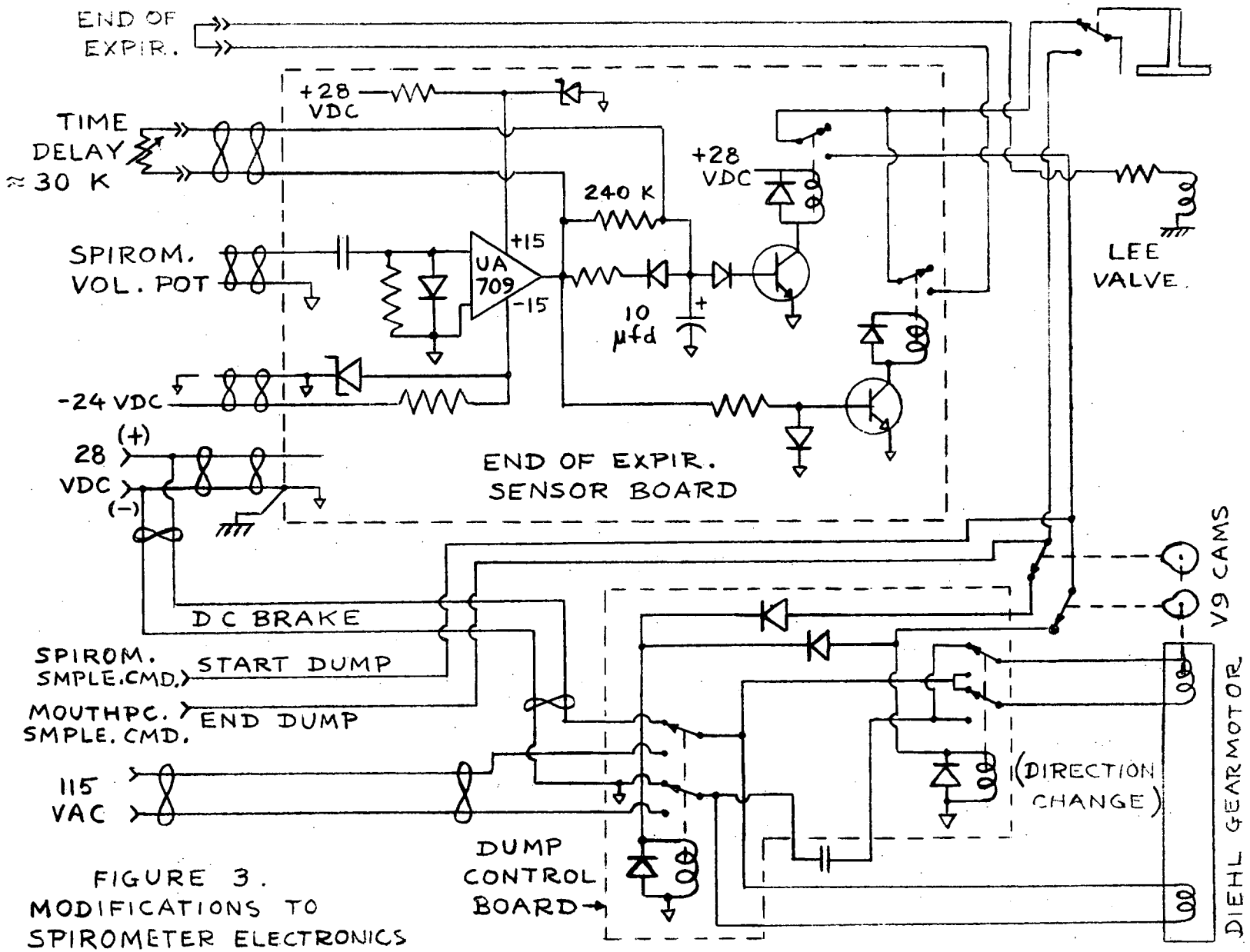

FIGURE 3.
MODIFICATIONS TO SPIROMETER ELECTRONICS

Diehl Model FPE 211M8-960271 IT2. Figures 2 and 3 show the controls. Note that direct current is applied to obtain braking of the gearmotor as it approaches the "valve closed" position.

A fine mesh screen was used as a dust filter at the mouthpiece end of the sampling line. The sampling lines from the mouthpiece (51 inches long) and from the Lee valve (36 inches long) to the Scanivalve have an inside diameter of 0.030 inches, as do the one inch long lines between the Scanivalve, the Tee and the mass spectrometer. The two lines between the Scanivalve and the other Tee are each 0.048 inches I.D. and 14 inches long, and the remaining tubing between the Tee and the Neptune diaphragm pump is 0.187 I.D. by 60 inches long.

The pressure drops in the sampling line with the configuration described above was measured at two points. The pressure drop between the mouthpiece and a point just upstream from the adjustable orifice ahead of the mass spectrometer inlet was 47.6 mm of Mercury. There was a huge pressure drop in the sampling line past the mass spectrometer inlet, and the absolute pressure just downstream of this inlet was only 18 Torr.

Regarding the breathing ducts, the 19 inch long corrugated rubber hose from the dryer to the spirometer has a minimum I.D. of 1.12 inches. The smooth bore rubber hose leading from V-4 to the dryer is 35 inches long and has a 1.25 inch I.D. The corrugated plastic hoses at each end of the J valve are 4 inches long and have inside diameters of 1.25 inches. The plastic pipes connecting V-3 and V-4 with the rebreathing bag and with V-5 have inside diameters of 0.88 inches. The longest of these is 8 inches, the others are very short -- approximately 1 inch each.

Item	Source	Model
J-Valve	Collins	P-307
V-3, V-4	Collins	P-319
Flowmeter Head	Fleisch	3
Micromanometer with Integrator	Medistor	P-10
Rebreathing Bag	Ohio Chemical	3 Liter
Dryer Container (Cloth Filter Added)	Collins	P-413
"Drierite" Drying Agent $CaSO_4$	Collins	P-2250

The J-valve which was originally used in this apparatus was a Lloyd valve (Collins P-312). It has the following advantages over the P-307: (1) Less dead space; (2) Lower flow resistance; (3) Inlet and outlet ports are close together, enabling shorter pipelines in the plumbing leading to and from the rebreathing bag. However, the Collins version of the Lloyd valve has a disqualifying flaw.

The two moving flappers are made of thin methyl methacrylate, and when one side becomes covered with condensed moisture, the flapper warps. This permits backflow leakage in amounts which are too large to be tolerable.

Exercise was performed on a Lockheed designed and built ergometer. An 8-channel Sanborn recorder was used to gather data.

It should be noted that the photograph (Figure 4) shows the apparatus prior to several improvements. The length and diameter of the white pipes leading to the rebreathing bags were reduced, and the lengths of the corrugated plastic hoses above and below the J-valve were reduced.

LAB PROCEDURE

A one liter syringe was used to calibrate the volume signals generated by the spirometer and by the flowmeter integrator. The syringe was placed at the mouthpiece and due to the action of the J valve, filling of the syringe caused air to flow thru the flowmeter, whereas emptying of the syringe caused air to flow into the spirometer.

The pressure readout of the Medistor micromanometer was calibrated by applying the same pressure simultaneously to a conventional manometer. To obtain flowrate calibration, the configuration of the appratus was changed. The Fleisch flowmeter head was mounted directly onto the main spirometer orifice, and the spirometer piston was manually retracted, then released. Its return spring drove the piston at a rather constant rate, and the flow and volume outputs of both the spirometer and the flowmeter were simultaneously recorded to obtain a direct comparison. The mass spectrometer output was calibrated by filling a septum-stoppered plastic bag with a gas mixture of known CO_2 concentration, then penetrating the septum with a tiny tubular nozzle to feed the known gas into the sampling line. This method was used to prevent the calibration gas pressure from being higher than ambient. The internal pressure in the ion source chamber of the mass spectrometer was continuously monitored and an orifice in the sample introduction line was manually adjusted to maintain the optimum pressure.

The procedure used for determination of resistance to breathing was to install manometer connections at the various points of interest in the breathing ducts, and then have each of the subjects expire at maximum rates thru the duct, while monitoring the pressure.

The procedure used to demonstrate the essential synchronization of switching between sampling points within a single breath cycle, and to ascertain the effects of gas dilution was to use the apparatus to make actual

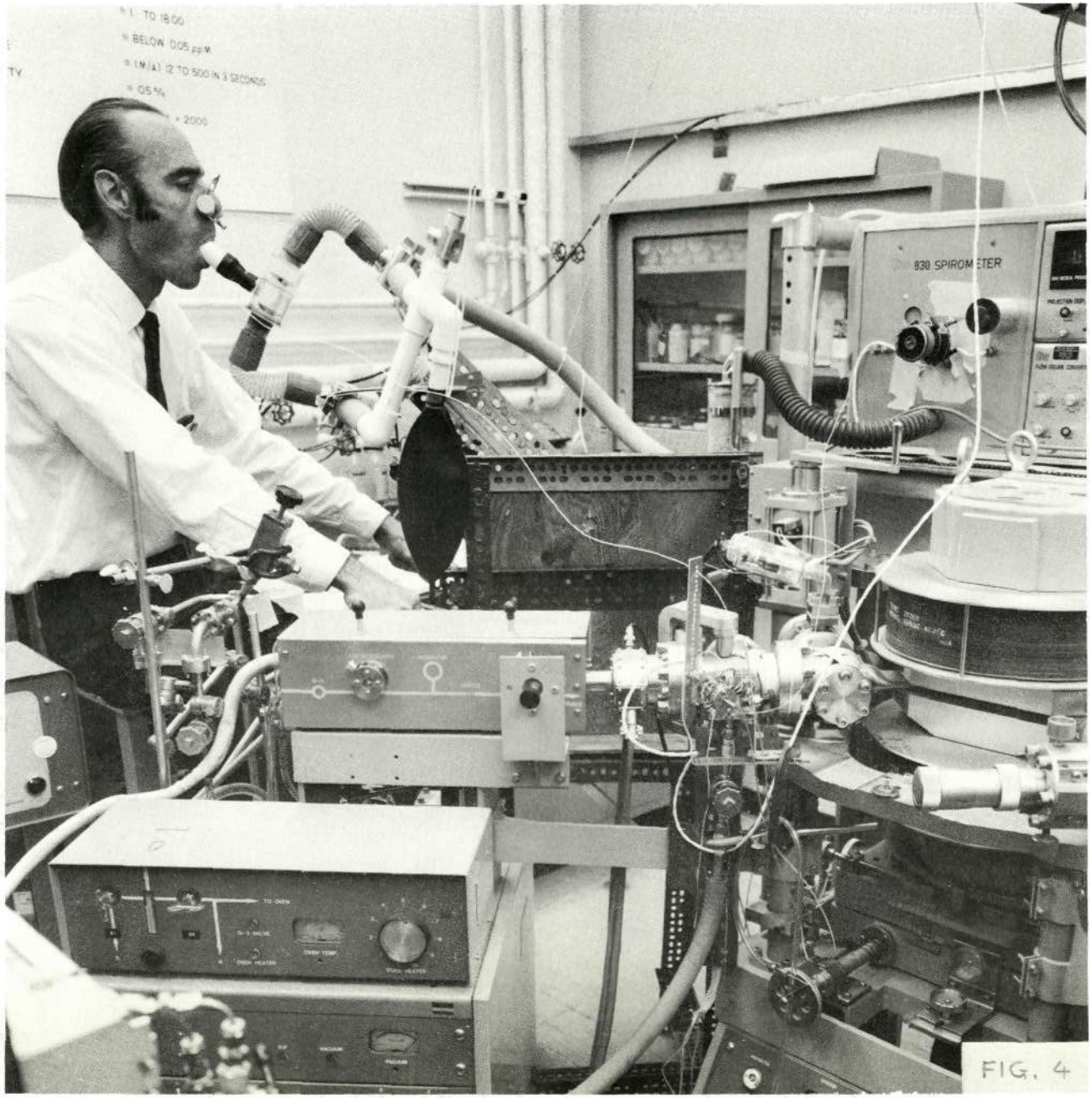

FIG. 4

measurements of ($\dot{V}_A$ min), (V_I), (V_E), ($F_{A_{CO_2}}$), ($F_{E_{CO_2}}$), and (Q) on several subjects, using recorder chart speeds of 10 to 100 mm per second. The recorded data was used not only to compute the desired values, but also to determine the delay and response times involved, and effects of gas dilution.

The procedure for assessing problems associated with the manual valve used for switching from the normal operating mode to the rebreathing bag mode was to perform the indirect Cardiac Output measurement on several subjects, both at rest and during exercise on an ergometer.

RESULTS

Resistance to Breathing

Maximum inspiratory and expiratory efforts by 3 subjects produced the following peak resistances. The test configuration employed a Lloyd valve, not the Collins P-307 J Valve.

Subject	Inspiration Inches of Water	Expiration Inches of Water
A.W.	0.8	4.5
E.K.	0.9	4.2
J.A.	0.6	2.0

Use of the Collins P-307 J valve would add 1.4 to each of the above values. The breathing effort during inspiration was sufficiently low, but the expiratory resistance of the apparatus was too high. Individual portions of the expiratory flow path were measured, with the following results:

Equipment Segment	Expiration - Inches of Water
Lloyd Valve + V4 + white hose	0.15
Dryer filled with Drierite	3.80
Spirometer and black hose	0.55

It is obvious that the dryer has an excessively high resistance.

Timing of Sample Switching

Figure 5 is a chart recording made at the highest speed (100 mm per second) in order to accurately measure delay and response times. The sequence of events is:

(1) Following the end of expiration, the Lee valve switches to take its sample from the inside of the spirometer (i.e., collected expired gas), and this sample starts to flow toward the Scanivalve V-8.

(2) After an electronically timed delay, the spirometer dump valve V-9 opens. Simultaneously, the Scanivalve switches to route the sample coming from the Lee valve to the mass spectrometer. Referring to the upper trace of Fig. 5, it can

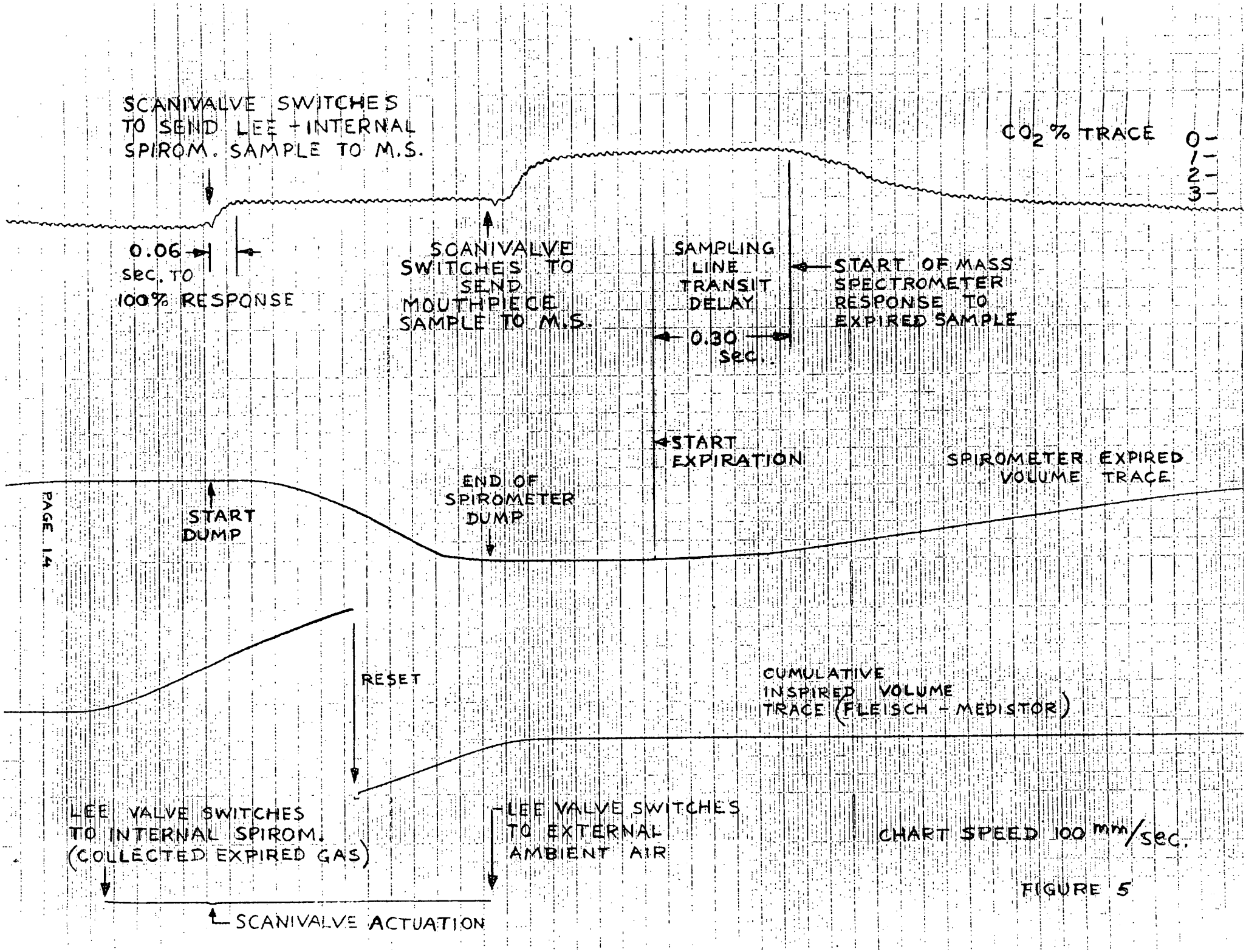
SCANIVALVE SWITCHES TO SEND LEE + INTERNAL SPIROM. SAMPLE TO M.S.
CO_2 % TRACE
0
1
2
3
0.06 sec. TO 100% RESPONSE
SCANIVALVE SWITCHES TO SEND MOUTHPIECE SAMPLE TO M.S.
SAMPLING LINE TRANSIT DELAY
0.30 sec.
START OF MASS SPECTROMETER RESPONSE TO EXPIRED SAMPLE
START EXPIRATION
SPIROMETER EXPIRED VOLUME TRACE
START DUMP
END OF SPIROMETER DUMP
RESET
CUMULATIVE INSPIRED VOLUME TRACE (FLEISCH - MEDISTOR)
LEE VALVE SWITCHES TO INTERNAL SPIROM. (COLLECTED EXPIRED GAS)
LEE VALVE SWITCHES TO EXTERNAL AMBIENT AIR
CHART SPEED 100 mm/sec.
SCANIVALVE ACTUATION

FIGURE 5

be seen that the total elapsed time from Scanivalve switching to 100% response of $F_{E_{CO_2}}$ is 0.06 seconds.

(3) At the conclusion of spirometer dump, three events occur simultaneously. The Lee valve switches to draw external ambient air, the spirometer dump valve closes, and the Scanivalve switches to route the sample coming from the mouthpiece to the mass spectrometer.

(4) The subject commences expiration. 0.30 seconds later, the CO_2 reading begins to increase. This delay represents the transit time for the sample to travel from the mouthpiece to the mass spectrometer, plus the initiation of mass spectrometer response.

Effects of Gas Dilution

It is apparent that the CO_2 trace immediately following the end of inspiration, and before the start of expiration, does not go to zero. This was due to backflow leakage in the Collins manufactured Lloyd valve, as mentioned in a preceding section. This valve was replaced with a Collins P-307 J valve, and the elimination of the backflow leakage is apparent on Figure 6, where the CO_2 trace drops to zero during inspiration.

Use of Manual Valve for Indirect Cardiac Output - Rebreathing

Figure 6 was recorded with the subject performing mild exercise (90 watts on ergometer). At the start (left side of chart), he was inspiring through the flowmeter and expiring into the spirometer, via the dryer. After 8.3 seconds, at the end of an expiration, the subject switched Valves V-3 and V-4 simultaneously and commenced breathing from the rebreathing bag. After 3 inspirations, CO_2 equilibrium was reached. Before reaching the equilibrium point, inspirations show higher CO_2 values than expirations, and after equilibrium has been reached, the opposite is true.

Sample Computation of Results

As an example, a set of calculations will be made from the data on Figure 6 and the portion of the chart preceding it.

Summation of Expired Volumes for 20 Seconds	Breath	Summation of Inspired Volumes for 20 Seconds
36 mm	1	64 mm
31.5	2	50
31	3	52
33	4	63
30.5	5	54
33	6	55
35.5	7	62
Total 230.5 mm		Total 400 mm

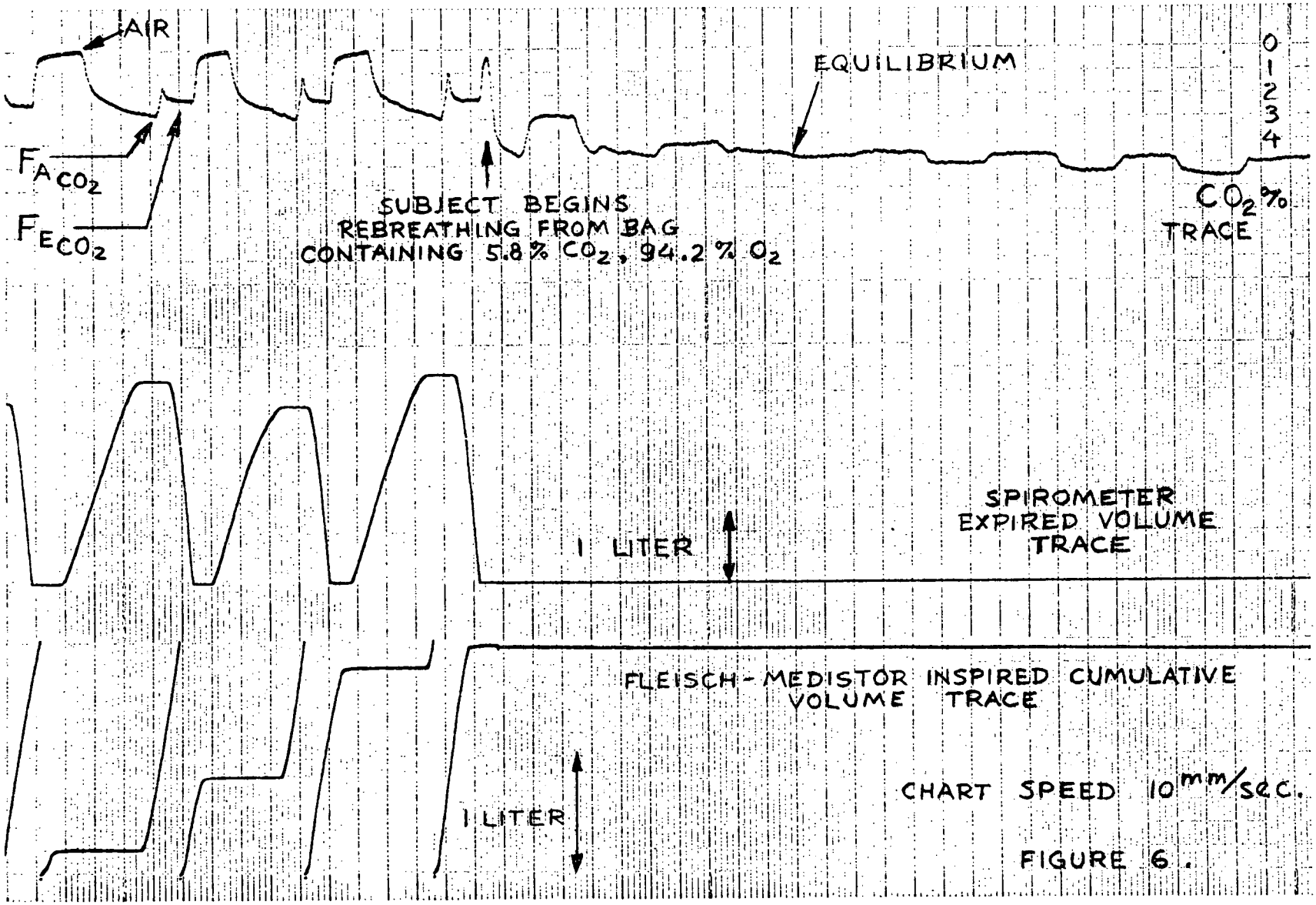
AIR
$F_{A\,CO_2}$
$F_{E\,CO_2}$
SUBJECT BEGINS
REBREATHING FROM BAG
CONTAINING 5.8% CO_2, 94.2% O_2
EQUILIBRIUM
0
1
2
3
4
CO_2 %
TRACE
SPIROMETER
EXPIRED VOLUME
TRACE
1 LITER
FLEISCH-MEDISTOR INSPIRED CUMULATIVE
VOLUME TRACE
1 LITER
CHART SPEED 10 mm/sec.

FIGURE 6.

$$\dot{V}_E = \frac{(230.5 \text{ mm}/20 \text{ sec } (60 \text{ sec})}{\text{Scale factor } 15 \text{ mm}/_L} + \text{Correction for sample withdrawn}$$

$$\dot{V}_E = 46.1 \ ^L/_{min.} + 0.13 \ ^L/_{min} = 46.2 \ ^L/_{min.}$$

$$\dot{V}_I = \frac{(400 \text{ mm}/20 \text{ sec}) \ (60 \text{ sec})}{\text{Scale factor } 26 \text{ mm}/_L} - \text{Correction for sample withdrawn}$$

$$\dot{V}_I = 46.2 \ L/_{min} - 0.058 \ L/_{min} = 46.1 \ L/_{min}$$

$$F_{A_{CO_2}} = 0.030$$

$$F_{E_{CO_2}} = 0.021$$

Minute alveolar ventilation can now be calculated:

$$\dot{V}_{A_{min}} = \frac{\dot{V}_E \ (F_{E_{CO_2}})}{F_{A \ CO_2}} = \frac{46.2 \ L/_{min} \ (.021)}{0.030} = 32.4 \ L/_{min.}$$

Carbon dioxide production can be computed as follows:

$$\dot{V}_{CO_2} = \dot{V}_E \ (F_{E_{CO_2}}) - \dot{V}_I \ (F_{I_{CO_2}})$$

$F_{I_{CO_2}}$ in the ambient air is approximately 0.03%.

$$\dot{V}_{CO_2} = (46.2 \ L/_{min}) \ (.021) - (46.1 \ L/_{min}) \ (.0003)$$

$$\dot{V}_{CO_2} = .971 - .0138 = 0.957 \ L/_{min} = 957 \ ml/_{min}$$

From Figure 7, the CO_2 content of venous blood, $c_{\bar{v}CO_2}$ can be obtained by projecting a point on the upper curve toward the left. The curve is entered from the scale on the bottom, using the equilibrium breathing CO_2 from Figure 6 (4.5%).

$$C_{\bar{v}CO_2} = 454 \ ml/_L$$

Similarly, the lower curve of Figure 7 is used to obtain the CO_2 content of arterial blood along the left hand scale by entering along the bottom scale with the end-tidal, or alveolar concentration of CO_2 (3%).

$$C_{a \ CO_2} = 375 \ ml/_L$$

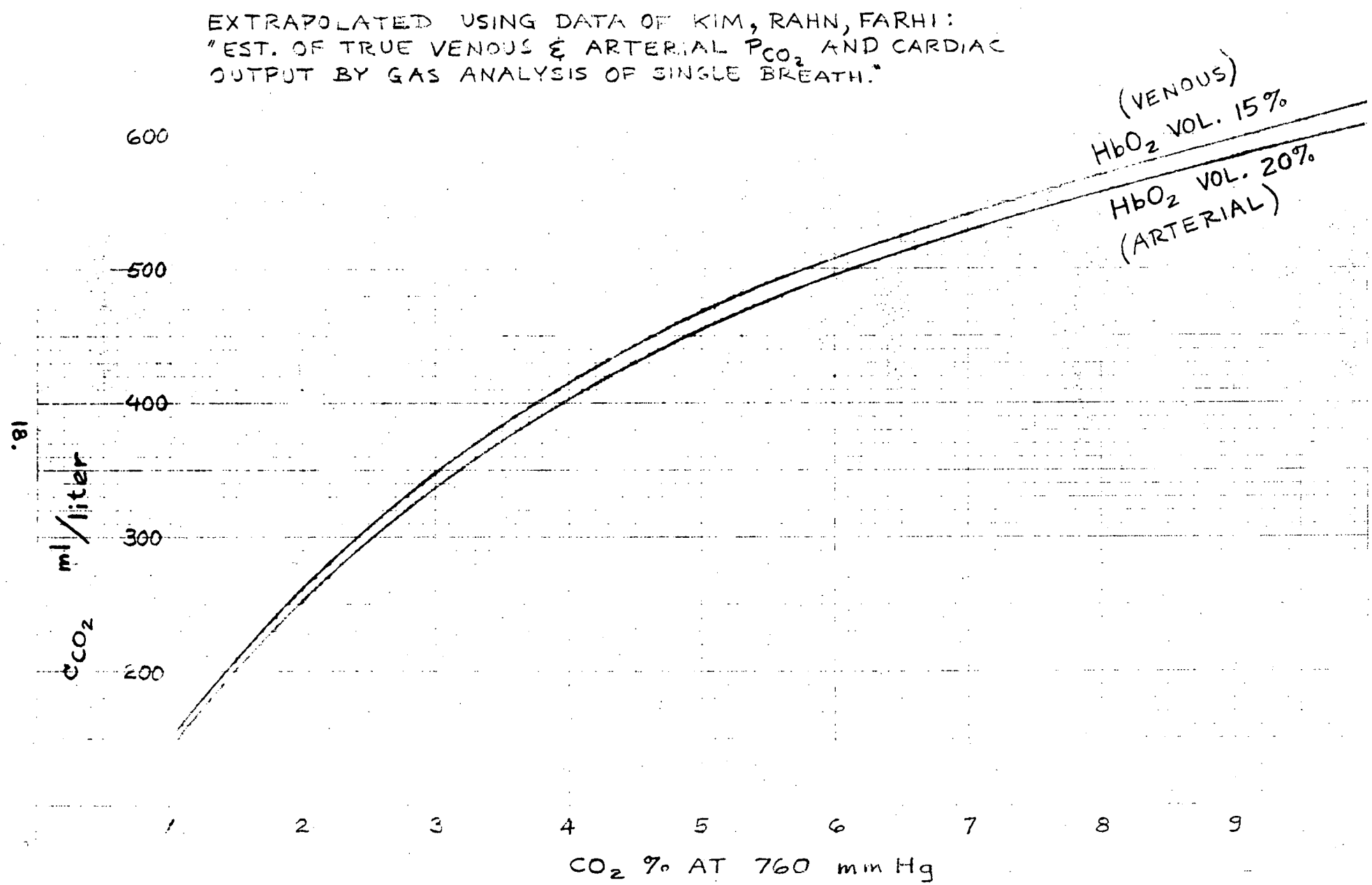

FIGURE 7. BLOOD CO_2 DISSOCIATION CURVES.

Cardiac output Q can now be calculated:

$$Q = \frac{\dot{V}_{CO_2}}{(C_{\bar{v}CO_2})-(C_{aCO_2})} = \frac{957\ ml/_{min}}{454\ ml/_L - 375\ ml/_L}$$

$$Q = \frac{957}{79} = 12.1\ L/_{min.}$$

Comparison of Flow and Volume, Flowmeter and Spirometer

Figure 8 was not made using the normal plumbing arrangement shown in Figure 1. Instead, the dryer was disconnected from the spirometer, and in its place the Fleisch flowmeter head was directly connected to the spirometer. Dump valve V-9 was kept closed. The spirometer piston was drawn back by hand, causing the two upper traces of Figure 8 to rise, until full travel was reached. This corresponds to a volume of 10.3 liters. The piston was then released, permitting the 10.3 liters of air to flow out through the flowmeter (plus an additional restriction which was added to slow the flow). The agreement between the shapes of the two upper traces is obvious. However, a drift is apparent in the top trace between its initial and final values. This drift occurred in the flow-to-volume integrator of the Medistor unit, and this condition needs to be corrected.

The third trace from the top represents the pressure drop across the Fleisch flowmeter head as measured by the Medistor micromanometer. The vertical scale of this trace is 50 mm of chart equal to 10 mm of water pressure across the Fleisch flowmeter (in the outflow direction only).

In the second trace from the top, the spirometer volume decreases by 3 liters during a period of 1.5 seconds, a rate of 120 liters per minute. During this period, the third trace from the top shows a pressure drop of 2.15 mm of water. From a laboratory calibration curve for Fleisch flowmeter head #3.1245, the pressure drop is 2.20 mm of water at a flow rate of 120 $L/_{min.}$ This correlates within 2.3%.

In comparing the two bottom traces of Figure 8, it is apparent that they are nearly identical. Both the Fleisch plus Medistor pressure drop trace and the differentiated volume, or flow rate trace of the spirometer, show the same perturbations, which were caused by varying rates of spirometer piston speed. It is believed that this phenomenon is caused by variations in the resistance of the rolling diaphragm seal between the spirometer piston and cylinder.

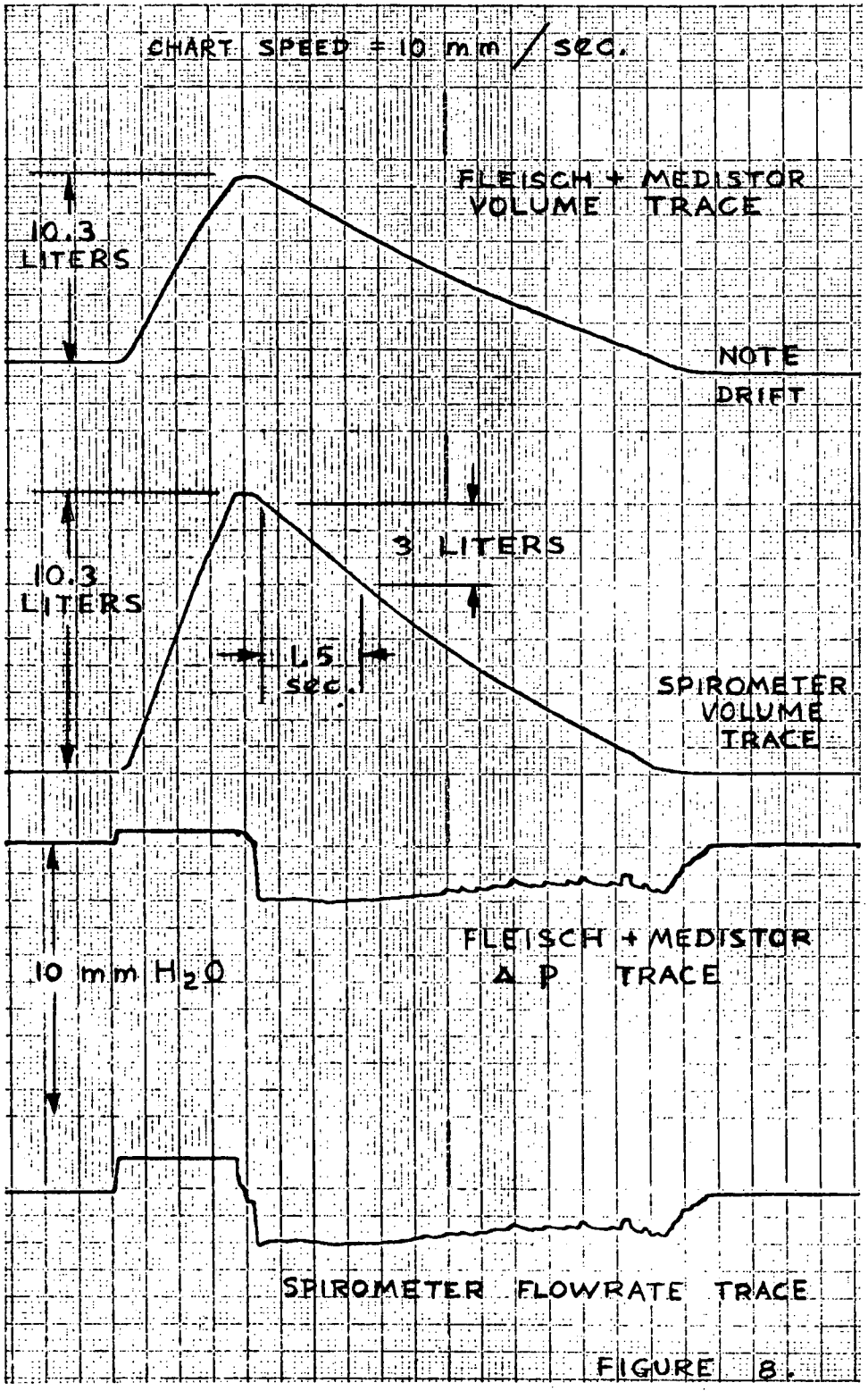
CHART SPEED = 10 mm / sec.
FLEISCH + MEDISTOR VOLUME TRACE
10.3 LITERS
NOTE DRIFT
3 LITERS
10.3 LITERS
1.5 sec.
SPIROMETER VOLUME TRACE
10 mm H_2O
FLEISCH + MEDISTOR ΔP TRACE
SPIROMETER FLOWRATE TRACE

FIGURE 8.

Results for Several Subjects

Results of respiratory measurements for three subjects, both at rest and during exercise, are shown in the following table. Subject JA exhibits decidedly different characteristics from the other two. In those tests which were run two or three times, the results were comparable.

	Subject JA		Subject EK		Subject AW	
	Rest	Exercise	Rest	Exercise	Rest	Exercise
$(\dot{V}_E)$ L/min.	13.9	29.6	29.3	52.3	28.1	48.7
$(F_{A_{CO_2}})\%$	6.0	7.5	2.8	3.1	3.2	4.0
$(F_{E_{CO_2}})\%$	4.3	5.2	2.1	2.4	2.5	3.0
$(\dot{V}_{A\ min})$ L/min	10.0	20.4	22.0	40.5	22.0	36.5
$(\dot{V}_{CO_2})$ L/min	0.59	1.53	0.61	1.25	0.70	1.45

CONCLUSIONS

A. The resistance to inspiration was very low; the resistance to expiration was too high due to the type of dryer which was used. It is believed that use of the NASA-MSFC dryer employed in the Metabolic Analyzer will eliminate this condition. (It should be noted that none of the subjects found the expiratory effort to be troublesome).

B. The method used for switching the mass spectrometer sample from that drawn at the mouthpiece to that drawn from the spirometer, within each breath cycle, was very successful. A few quantitative improvements would be desirable, (e.g., shorter delay and response times, and a diminished sample flow rate). The plumbing configuration employed in this laboratory verification apparatus is somewhat different from that which is shown in the Lockheed B-4 IMBLMS Final Report, and represents an improvement which will be incorporated in the IMBLMS design.

C. Gas dilution in the breathing lines caused initial problems in two instances. One was backward flow leakage through a deficient Lloyd valve, which was overcome by replacing it with a rubber flapper type of J valve. The other problem was caused by an excessively large volume in the ducts leading to and from the re-breathing bag. This was overcome by reducing the length and diameter of the ducts. No problems were apparent in the sampling lines, since they were very

small in diameter and the switching valves were miniature devices with practically no dead space.

D. No problems were encountered in having the subject manually switch valves V-3 and V-4 simultaneously to change from the normal open circuit breathing path to the closed circuit rebreathing bag path. It will, of course, be even easier if V-3 and V-4 are combined so that only one knob controls both; this is the proposed flight IMBLMS design.

In these laboratory verification tests, the rebreathing bag maneuver was performed only once in each experimental run. Therefore, the rebreathing bag was filled manually with the special gas mixture prior to the start of a run. In the flight version of IMBLMS it is planned to use an automatic bag filling device such that when the subject opens valve V-5, the rebreathing bag will automatically fill, flush out, and refill until the subject closes V-5. This will enable repeated rebreathing bag maneuvers to be performed for successive indirect determinations of cardiac output.

E. The spirometer is a better instrument for measuring gas volume and the flowmeter is a better instrument for measuring gas flowrate. When the Airco-Ohio spirometer volume signal is electronically differentiated to obtain a flowrate signal, this signal reflects the uneveness of the rolling diaphragm seal, and results in numerous perturbations which are unrelated to the subject's natural expiration flowrate.

When the Medistor P-10 Micromanometer integrates flowrate to obtain volume, a variable rate of drift was found to exist. This drift could not be cancelled out with the potentiometer adjustment which the manufacturer had provided on the instrument. In addition to this variable drift, the volume output signal was apparently non-linear. It appears that certain modifications of the Medistor P-10 instrument will be required to eliminate the drift and to linearize the output of the volume signal.

F. To determine cardiac output indirectly, the CO_2 rebreathing technique was used. Three different gas mixtures were used, having CO_2 percentages of 5.8, 6.5, and 8 (remainder oxygen). It was found that best results are achieved if the initial concentration of the CO_2 in the bag is about 3% higher than the end-tidal concentration. Since the end-tidal concentration varies with the individual, with state of rest or exercise, with time, with atmospheric composition and various other factors, it may be necessary to provide an infinitely variable (within limits) CO_2 concentration for the rebreathing bag.