NASA
SPACE VEHICLE
DESIGN CRITERIA
(GUIDANCE AND CONTROL)

NASA SP-8098

EFFECTS OF STRUCTURAL FLEXIBILITY ON ENTRY VEHICLE CONTROL SYSTEMS

JUNE 1972

NATIONAL AERONAUTICS AND SPACE ADMINISTRATION

GUIDE TO THE USE OF THIS MONOGRAPH

The purpose of this monograph is to organize and present, for effective use in space vehicle development, the significant experience and knowledge accumulated in development and operational programs to date. It reviews and assesses current design practices, and from them establishes firm guidance for achieving greater consistency in design, increased reliability in the end product, and greater efficiency in the design effort. The monograph is organized into three major sections that are preceded by a brief *Introduction* and complemented by a set of *References.*

The *State of the Art*, section 2, reviews and discusses the total design problem, and identifies *which* design elements are involved in successful designs. It describes succinctly the current technology pertaining to these elements. When detailed information is required, the best available references are cited. This section serves as a survey of the subject that provides background material and prepares a proper technological base for the *Design Criteria* and *Recommended Practices.*

The *Design Criteria*, shown in section 3, state clearly and briefly what rule, guide, limitation, or standard must be imposed on each essential design element to insure successful design. The *Design Criteria* can serve effectively as a checklist for the project manager to use in guiding a design or in assessing its adequacy.

The *Recommended Practices*, as shown in section 4, state how to satisfy each of the criteria. Whenever possible, the best procedure is described; when this cannot be done concisely, appropriate references are provided. The *Recommended Practices*, in conjunction with the *Design Criteria*, provide positive guidance to the practicing designer on how to achieve successful design.

The design criteria monograph is not intended to be a design handbook, a set of specifications, or a design manual. It is a summary and a systematic ordering of the large and loosely organized body of existing successful design techniques and practices. Its value and its merit should be judged on how effectively it makes that material available to and useful to the user.

For sale by the National Technical Information Service, Springfield, Virginia 22151 – Price $3.00

FOREWORD

NASA experience has indicated a need for uniform criteria for the design of space vehicles. Accordingly, criteria are being developed in the following areas of technology:

Environment
Structures
Guidance and Control
Chemical Propulsion

Individual components of this work will be issued as separate monographs as soon as they are completed. This document, *Effects of Structural Flexibility on Entry Vehicle Control Systems,* is one such monograph. All previous monographs in this series are listed at the back of this document.

These monographs are to be regarded as guides to design and not as NASA requirements, except as may be specified in formal project specifications. It is expected, however, that the criteria sections of these documents, revised as experience may indicate to be desirable, eventually will be uniformly applied to the design of NASA space vehicles.

This monograph was prepared for NASA under the cognizance of the Jet Propulsion Laboratory, California Institute of Technology. Principal contributors were Mr. Richard B. Noll of Aerospace Systems, Inc., and Dr. John J. Deyst, Jr., of the Massachusetts Institute of Technology. Dr. R. S. Passamaneck of Jet Propulsion Laboratory was also a contributor to the monograph.

The effort was guided by an advisory panel chaired by Dr. John J. Deyst. The following individuals participated in advisory panel activities:

J. S. Andrews	Boeing, Houston
K. J. Cox	NASA Manned Spacecraft Center
B. M. Dobrotin	Jet Propulsion Laboratory
M. Dublin	General Dynamics/Convair Aerospace Division, San Diego
B. M. Hall	McDonnell Douglas, Western Division
F. D. Hauser	Martin Marietta, Denver
P. Jaffe	Jet Propulsion Laboratory
R. P. Johannes	AF Flight Dynamics Laboratory
G. W. Jones	NASA Langley Research Center
E. E. Kordes	NASA Flight Research Center
E. L. Marsh	Jet Propulsion Laboratory
S. S. Osder	Sperry, Phoenix
K. G. Pratt	NASA Langley Research Center
S. Winder	NASA Marshall Space Flight Center
J. H. Wykes	North American Rockwell, Los Angeles Division

Comments concerning the technical content of this monograph will be welcomed by the National Aeronautics and Space Administration, Office of Advanced Research and Technology (Code RE), Washington, D.C. 20546.

June 1977

CONTENTS

1. INTRODUCTION 1

2. STATE OF THE ART 2

2.1 The Design Problem 2

2.2 The Design Process 6

2.3 Review of Design and Flight Experience 8

2.3.1 Structural Feedback 10

2.3.1.1 Vehicle Deformation 10

2.3.1.2 Local Deformation 16

2.3.2 Aeroelasticity and Thermal Effects 18

2.3.2.1 Aerodynamics 19

2.3.2.2 Aerodynamic Heating 23

2.3.2.3 Static Aeroelastic Problems 24

2.3.2.4 Dynamic Aeroelastic Problems 26

2.3.3 Other Interaction Effects 29

2.3.3.1 Transient Response Problems 29

2.3.3.2 Pogo 30

2.3.3.3 Winds 30

2.3.3.4 Flying (Handling) and Ride Qualities 30

2.3.3.5 Pilot Inputs 31

2.3.3.6 Digital Autopilot Considerations 31

2.3.3.7 Spin Effects 34

3. CRITERIA 34

3.1 Control System/Structural Interaction Analysis 35

3.2 Simulation Studies 36

3.3 Tests 36

4. RECOMMENDED PRACTICES 37

4.1 Control System/Structure Interaction Analysis 37

4.1.1 Control System Design 37

4.1.2 Structural Modeling 38

4.1.3 Aerodynamics 40

4.2 Simulation Studies 40

4.3 Tests 41

4.4 Specific Recommended Practices 43

4.4.1 Structural Feedback 43

4.4.1.1 Vehicle Deformation 43

4.4.1.2 Local Deformation 45

4.4.2 Aeroelasticity and Thermal Effects 46
4.4.2.1 Static Aeroelastic Problems 46
4.4.2.2 Dynamic Aeroelastic Problems 47
4.4.3 Other Interaction Effects 48

REFERENCES 50

NASA SPACE VEHICLE DESIGN CRITERIA MONOGRAPHS
ISSUED TO DATE 59

EFFECTS OF STRUCTURAL FLEXIBILITY ON ENTRY VEHICLE CONTROL SYSTEMS

1. INTRODUCTION

The flexible structure of an entry vehicle can be excited by forces acting on the vehicle, with the resulting deformations producing flight control system inputs. To account for interaction between the structure and control system, the flexible structure must be considered an integral part of the control loop. Unless the effects of flexibility are appropriately assessed, effective control of the flexible modes may not be realized, and performance degradation, excessive vehicle motion, instability and, possibly, structural failure may result.

Entry vehicles operate over a wide range of speeds and altitudes varying from the high-velocity, orbital altitude conditions of space flight to the low-speed, low altitude conditions experienced by aircraft. The entry vehicle control system is designed to provide adequate response to guidance commands in order to maintain the vehicle within a mission-oriented design entry corridor throughout this range of operating conditions. The control system must provide a response sufficient to achieve a specified terminal accuracy without causing excessive structural loading. These loads include aerodynamic forces and moments, aerodynamically induced thermal effects, control forces, and acceleration loads which result in deformations of the structure. Entry vehicle control system design is accomplished by incorporating the structural model in the control system analysis so that interactions can be properly considered. In addition, the vehicle may be affected by structural, control system, and environmental factors such as noise, propellant dynamics, pilot inputs, mass distribution changes, winds, and sensor locations which contribute to the complexity of analyzing interactions.

Undesirable interactions may be manifested as (1) trim changes such as those induced by thermal distortion of a lifting surface, (2) loss of control effectiveness as exemplified by control reversal caused by aeroelastic phenomena, (3) loss of stability as exemplified by divergent oscillation caused by improper sensor location, and (4) reduced stability or prolonged transient responses such as those caused by a change in aerodynamic characteristics resulting from structural deformation.

This monograph is concerned with control-system/structure interaction of space vehicles during planetary and earth entry and deals principally with atmospheric entry and aerodynamic deceleration to subsonic speeds.

This monograph complements NASA SP-8036, *Effects of Structural Flexibility on Launch Vehicle Control Systems* (ref. 1), and NASA SP-8016, *Effects of Structural Flexibility on Spacecraft Control Systems* (ref. 2). Also closely related are NASA SP-8079, *Structural Interaction with Control Systems* (ref. 3), which discusses structural design to minimize interactions and the definition of structural characteristics and mathematical models to allow prediction of undesirable interactions, and NASA SP-8028, *Entry Vehicle Control* (ref. 4), which is concerned with vehicle attitude

motions beginning with orientation for atmospheric entry and ending with orientation at 32 800 meters (100 000 feet). Other related design criteria monographs include references 5 through 22.

2. STATE OF THE ART

Structural flexibility is an important consideration in the design of control systems for entry vehicles. Since the control system may be required to operate under a wide range of conditions associated with the mission, the flexible structure and the control system can interact in numerous ways. During the initial entry phase, many vehicles may be regarded essentially as spacecraft operating outside the sensible atmosphere. The design of control systems for flexible spacecraft is discussed in reference 2. The terminal phase of entry is steady flight in the atmosphere for which a large body of information is available for aircraft. The unique condition characterizing entry vehicles is the deceleration and transition in the atmosphere from the approach velocity to steady flight at low altitude. Since design and flight experience for this phase of entry is limited, it is essential that the experience dealing with interactions in aircraft, spacecraft, and launch vehicle be examined to aid in the recognition, evaluation and proper consideration of interactions.

2.1 The Design Problem

The interaction of the flexible structure and the control system in entry vehicles is basically the same as is manifested in launch vehicles (ref. 1) and spacecraft (ref. 2); differences involve the presence of rapid and severe aerodynamic heating and other aerodynamic effects. In these vehicles, the control system processes data from sensors to provide command signals to the control effectors (i.e., control actuators and control force devices). The sensed signals include the effects of structural flexibility, and hence the structural deformations affect the command signals to the effectors. Since the effectors apply forces to the structure and can add energy faster than it is dissipated, the control system must properly account for the sensed signals to insure proper performance.

Two basic control system techniques are used to accomplish this. The first, called gain stabilization, attenuates or filters sensor signals at resonant structural frequencies, thereby preventing the effectors from supplying energy at those frequencies. In effect, structural flexibility is removed from the signal to allow rigid-body control only. If the required bandwidths of the control and guidance systems preclude gain stabilization, an alternate method, phase stabilization, is used. Here the control forces are phased to remove energy from the modes, so that the control system provides both rigid-body control and control of selected vibration modes.

For the entry vehicle, the interaction of the structure and control system is affected primarily by the severe aerodynamic and thermal environment associated with deceleration and transition maneuvers within the planetary atmosphere. The primary task of the entry flight control system is to provide the desired response to guidance commands in order to steer the flexible vehicle along a trajectory or flight path to a desired set of end conditions, while maintaining acceleration loads, aerodynamic loads and thermal effects within tolerable limits. Some flight corridors defined by these limits are shown in figure 1 for earth entry vehicles. For ballistic-type vehicles the corridor

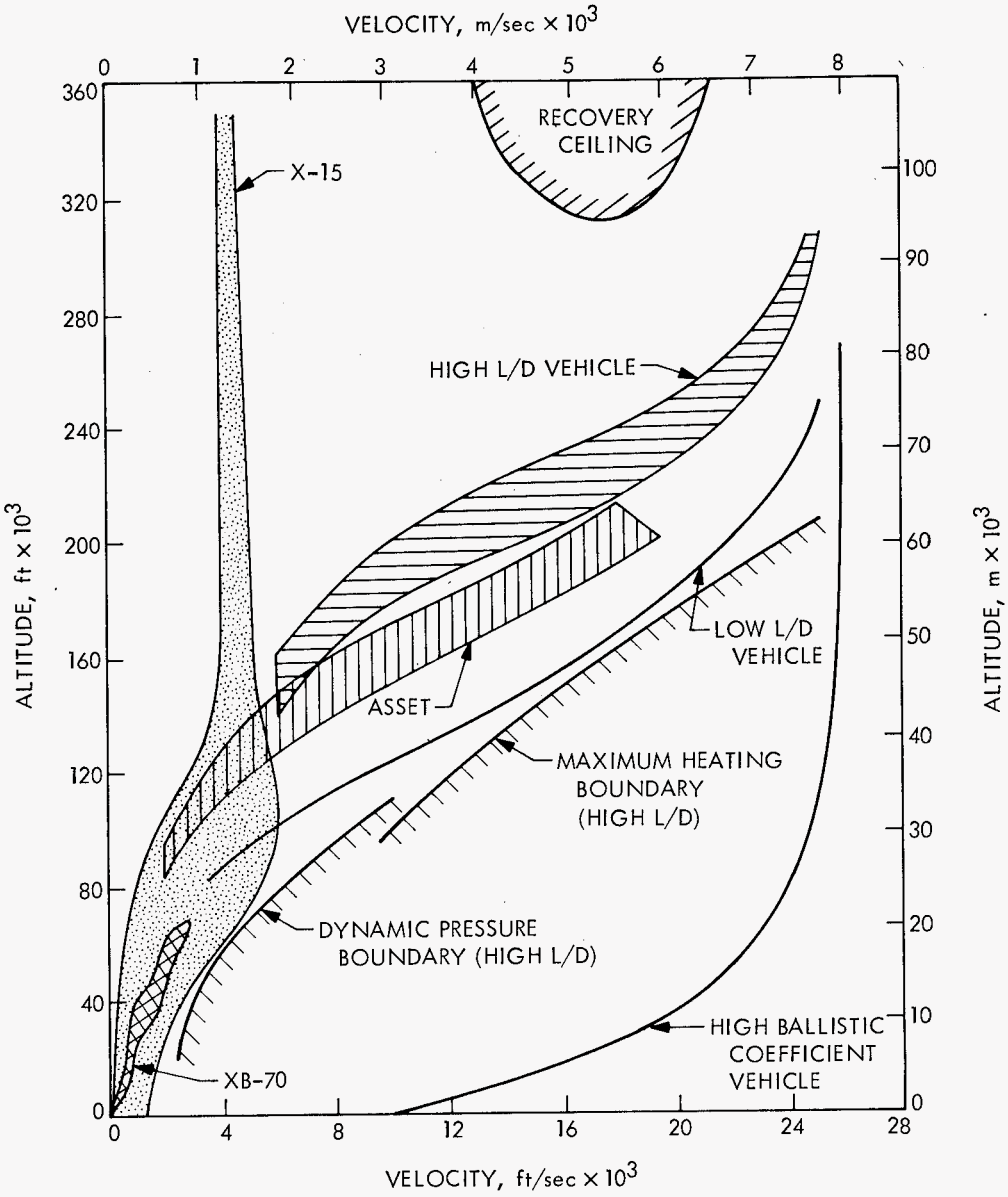

Figure 1.–Earth entry vehicle operating boundaries.

is relatively wide; for manned lifting entry vehicles, the corridor is closely constrained. It is for the latter class of vehicles that interactions most frequently arise. The deceleration and attitude transition maneuvers for a typical lifting entry vehicle (fig. 2) result in a wide range of dynamic conditions. As seen in figure 3, the vehicle speed may vary from superorbital to less than 306 m/s (1000 fps) as the vehicle descends from altitudes in excess of 122 400 m (400 000 ft) to conventional aircraft operating altitudes. The angle of attack during entry may vary from large angles approaching 60 deg to less than 10 deg as illustrated in figure 2. Simultaneously, the vehicle descends and passes through an atmosphere in which the pressure, density and temperature vary over wide values. The combination of atmospheric and vehicle characteristics produces a wide range of dynamic pressures and Mach numbers, resulting in large changes in aerodynamic forces and their distributions and in intense aerodynamic heating. In addition, the atmosphere may

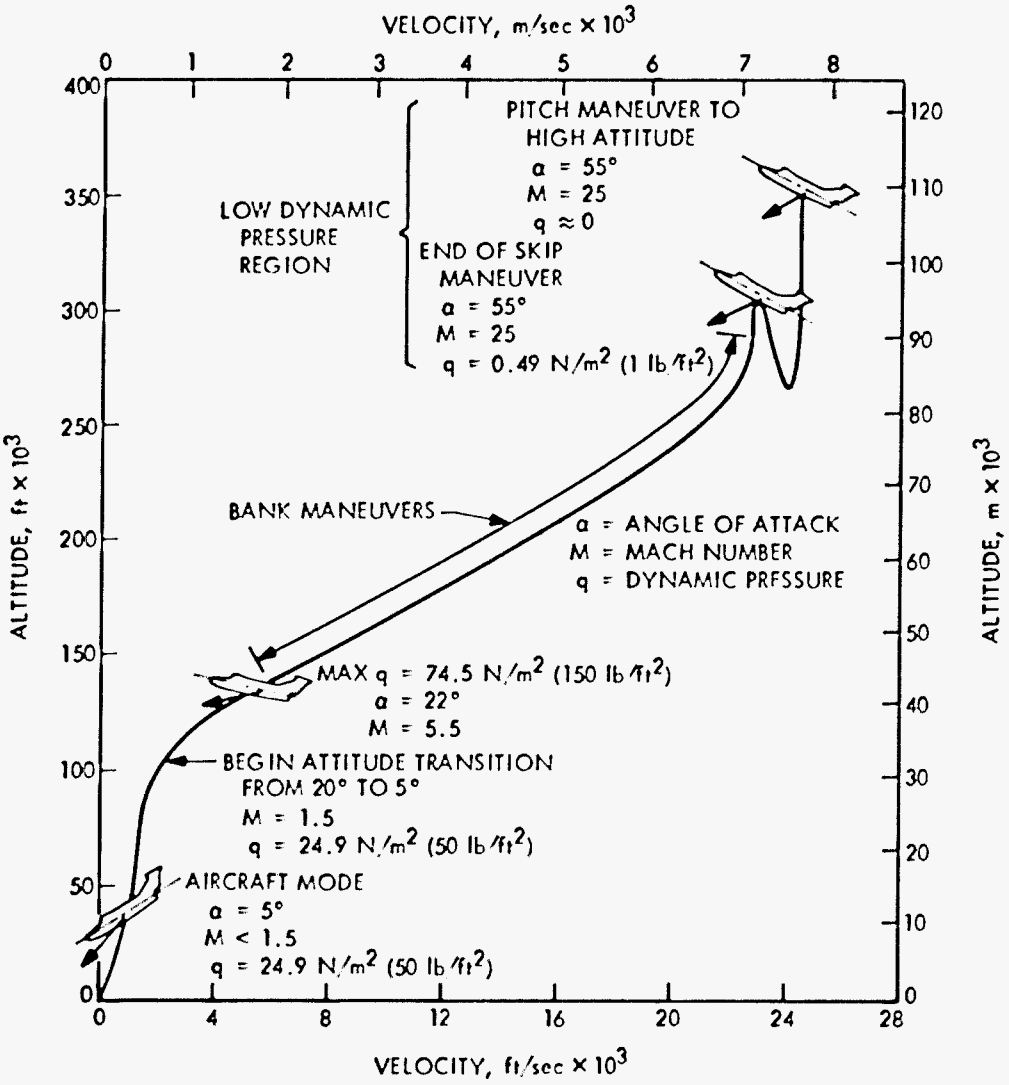

Figure 2.–Entry maneuvers for typical high lift entry vehicle.

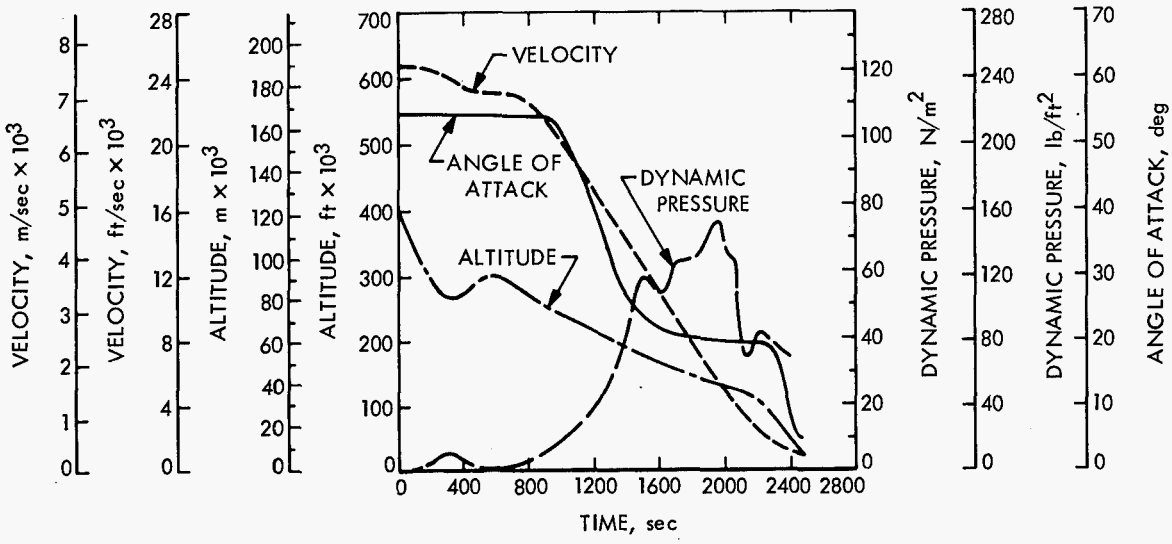

Figure 3.–Typical entry time history for high lift entry vehicle.

possess significant winds and turbulence which excite the structure. The control forces are usually provided in the tenuous atmosphere existing at high altitudes by reaction control systems. Control is transferred to movable aerodynamic control surfaces at low altitude. A blend of aerodynamic and reaction control forces is used between these two modes. Thus the effector energy source and its implementation vary considerably during entry.

The wide range of excitation sources causes considerable variation in structural response characteristics. Therefore, the design of the flight control system must include the effects of structural deformation under the combination of control forces, aerodynamic forces, and thermal effects. Control forces to be considered include those required to trim the vehicle to the desired attitudes, to provide desired stability of all vibration modes and to provide maneuverability. Also to be considered is the effectiveness of the control devices to provide the necessary control forces and to keep the vehicle responses to unavoidable disturbances, such as winds, within desired limits.

The relationship of the control system, structure, and environment is illustrated by a typical block diagram of the control loop in figure 4. The controller processes guidance commands and sensor feedback signals and generates outputs to the effectors. The controller, which may be analog, digital, or hybrid, includes any signal conditioning such as filtering or compensation, and its feedback structure may change with flight phase. Forces introduced by the effectors affect the vehicle motion and inevitably excite flexible body modes. In addition, external disturbances such as aerodynamic loads may excite the modes. The total motion of the vehicle, including the effects of structural flexibility, is detected by the sensors and fed back to the controller and the guidance system. A pilot in the loop provides another feedback path, raising the possibility of pilot-induced oscillations. Appropriate flying qualities must be provided if there is a pilot in the loop.

Proper design of the control system considers structural flexibility so that its effects can either be negated or controlled. However, if structural flexibility is either ignored or improperly considered, serious undesirable interactions can occur.

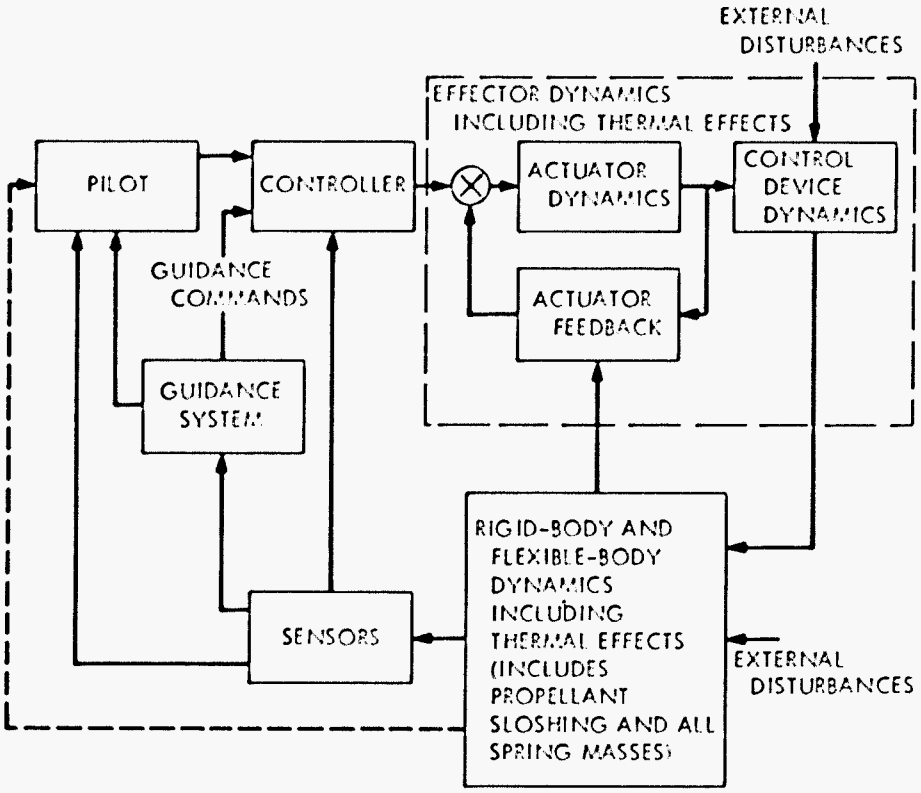

Figure 4.–Block diagram of control loop with flexible body dynamics.

Interactions of the control system and the flexible structure are most commonly manifested as structural oscillations, reinforced by the control system through the basic feedback path illustrated in figure 4. This form of interaction, termed structural feedback, can result in self-limited oscillations which are detrimental to the satisfactory performance of the vehicle or the response can cause divergent oscillations which can result in structural failure. As seen in figure 4, external disturbances (primarily aerodynamic) cause deformation of the structure. The mutual interaction between aerodynamic forces and structural elastic forces is known as aeroelasticity. Deformations caused by aeroelastic phenomena can alter the required trim forces, the static and dynamic stability of the rigid-body modes, the effectiveness of aerodynamic controls, the output of control sensors, and the responses of the vehicle to control commands and external disturbances such as winds. Aeroelastic phenomena can also induce self-excited oscillation which involves the control system either through direct coupling with an aerodynamic control surface or as an undesirable input to the control system. In addition to the basic aeroelastic phenomena, the high velocities encountered during atmospheric entry produce a severe thermal environment. The elevated temperatures cause changes in the structural parameters which are reflected in both the basic structural response and the aeroelastic characteristics of the vehicle. Since the thermal effects on the structure cannot be determined with precision, appropriate parametric variations of equivalent stiffnesses must be considered.

In addition to the basic feedback path illustrated in figure 4, a number of other interaction paths may cause difficulty. Actuators and engine dynamics may interact with the flexible structure.

Acoustic noise, buffet and vibration can affect sensor performance. The sensor mounting structure may exhibit undesired responses resulting from local flexibility. Propellant and payloads may also exhibit significant dynamic characteristics which affect the vibration characteristics. The motion of control devices produces inertia reaction forces and aerodynamic forces which can yield deflections of the support structure and in turn produce control disturbances. These effects can manifest themselves as alterations of control surface effectiveness and trim. Aerodynamic deceleration may be augmented by reaction motor deceleration, in which case pogo oscillation and other interactions of the reaction force and the flexible structure must be considered. Other factors which can influence interactions are vehicle flying and ride quality requirements, pilot inputs, digital autopilot consideration, spin stabilization effects, and static stability margins.

2.2 The Design Process

Control system design necessitates the investigation of the dynamic characteristics of the entire vehicle dynamic system including all significant vibration modes. A number of influences, usually derived from operational considerations but which also affect structural flexibility, constrain the control system design. For example, angle of attack is constrained as a function of Mach number; the vehicle may be required to follow a prespecified reference trajectory with specified accuracy and timing to minimize heating effects and insure landing point accuracy; the system must tolerate and correct for winds, turbulence, and other aerodynamic disturbances; and control device deflections are confined within specified limits. Freedom to select sensor location is usually limited by the physical restrictions imposed by other subsystems. Reliability is important particularly for manned lifting entry vehicles. For these vehicles increased emphasis is placed on automatic control techniques, with mission success depending on the reliability of the control system. With a high reliability control system, the designer can explore the possibilities of structural mode control, control in statically unstable flight conditions, flutter suppression, and center of mass control particularly through propellant control.

The design process is iterative, with each iteration becoming more sophisticated as vehicle parameters become better known through analysis, simulation and tests of the control system, the structure and their components. In early design stages, previous designs are reviewed to benefit from past experience, and a candidate control system is configured from the rigid-body control requirements. Refinement of the design necessitates the investigation of the structural flexibility characteristics and frequently results in considerable modifications to the candidate control system derived from the rigid-body analysis. Static considerations include the effects of aerodynamic forces and temperature on balance and trim, the effects of structural deformation on control effectiveness, the amount of control required for trim in the presence of structural deformation, and the effect of deformation on control system gain. Dynamic considerations include the various effects of the significant vibration modes. The control loop design with flexible-body dynamics is a nonlinear problem with time-varying coefficients, and present analytic methods are inadequate to obtain closed-form solutions for the complete system. Simplifying assumptions must therefore be made to obtain a tractable solution.

Generally, linearization techniques are applied to the vehicle dynamics and the control system. The vehicle dynamic system is generally analyzed by the modal coordinate method. The modal

coordinate method of analysis provides that the solution be obtained by truncating the vibration modal data to include only those modes which can interact with the control system. Selection of the number of modes to be retained in the solution varies considerably with the application. The modal characteristics are determined at periodic intervals along the trajectory (time-slice analysis) to account for time-dependent changes in structural mass and stiffness distribution. Experience, particularly with launch vehicles (ref. 1), has shown that selection of modes based both on modal characteristics, that is, shape, frequency, and damping, and on modal gain is desirable. The control system equations and distributed aerodynamics, both steady and unsteady, are included in the dynamic model. The candidate control system is linearized about a set of nominal parameter values, and a preliminary stability analysis is conducted to identify basic design requirements such as those modes that must be phase-stabilized and to determine whether baffles are needed to suppress slosh modes. Linear, time-invariant stability analysis methods are particularly useful to provide insight and as design tools. However, linear analysis is valid only for system responses of limited amplitude and for short intervals during which the system may be assumed stationary. Even with these limitations, these methods have proved invaluable and have provided the primary tools for design of almost all vehicle control systems to date. Gain and phase margins are especially useful as indications of system performance. Filtering and sensor location are chosen as required for stability of the system. Since pertinent structure and control system parameter values are seldom known with precision in the early phases of development, the design must be such as to tolerate a range of parameter variations. The modal data is particularly susceptible to inaccuracies introduced by the methods for determining the effects of aerodynamic heating.

As the design progresses the analysis evolves into a time-varying simulation which is particularly useful for investigating the effects of nonlinearities, higher order modes, cross coupling, input data tolerances, flexible internal subsystems, sensor and actuator dynamics, effects of malfunctions, and other factors which are difficult to evaluate analytically. Much of the control system hardware, especially sensors, actuating equipment, and control computers, can be used in the simulation.

Testing is an important element in the development of entry vehicle control systems because of the known deficiencies in aerodynamic predictions and the difficulty in accurately assessing the effects of aerodynamic heating. Ground tests to provide data for aerodynamic forces and moments, and aerodynamic heat loads are usually conducted on vehicle scale models or on components. Data obtained from these tests is included in the analyses and simulations and the design is evaluated. Once the vehicle is developed, ground tests are made to verify parameters used in the analysis. These consist of ground vibration tests to determine vibration modes, frequencies, and damping coefficients and frequency response tests to determine control system transfer functions. The tests may be conducted with the control system operating with hydraulics either engaged or disengaged. However, if the hydraulics are engaged, the tests can be misleading since limit cycles can often be induced which will not occur in the presence of aerodynamic or thrust forces (which produce increased damping).

2.3 Review of Design and Flight Experience

Entry vehicles can be classified according to the ratio of lift to drag (L/D) at hypersonic speeds. Typical vehicles are depicted in figure 5. Vehicles in the low L/D (<0.5) class, referred to as ballistic bodies, are usually bodies of revolution which derive lift, when desired, by a displace-

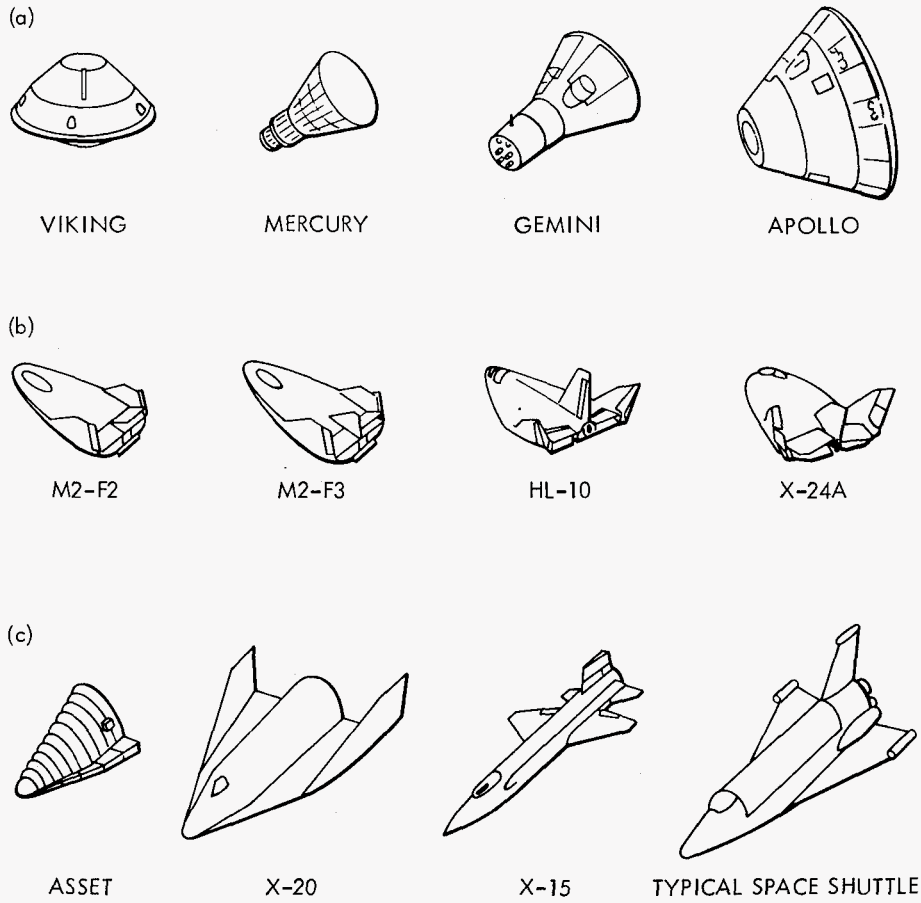

Figure 5.–Entry vehicle classes (not shown to relative size): (a) low L/D, (b) moderate L/D, (c) high L/D.

ment of the center of mass from the body centerline. Vehicles of this class include Viking, Mercury, Gemini, and Apollo. In the moderate L/D class ($0.5 < L/D < 1.5$) are the lifting bodies which derive aerodynamic lift from the body shape rather than from lifting surfaces. Experimental lifting bodies, M2-F2, M2-F3, HL-10, and X-24A, typify this class of vehicle. The third class of entry vehicle comprises the winged bodies such as ASSET, X-20 (Dyna Soar), X-15, and the space shuttle vehicle. These vehicles, which use wings to generate the required lift forces, have high L/D (in excess of 1.5).

Flight experience with entry vehicles is limited, most of the experience being with ballistic bodies. Ballistic vehicles have been notably free of control system/structure interaction problems since, for the most part, the structural vibration frequencies are very high relative to the controlled rigid-body frequency. Thus these vehicles are, in effect, rigid bodies except for local effects such as sensor mount flexibility. Flight information for lifting bodies (refs. 23–27) is limited to subsonic through low supersonic velocities. These vehicles have been flown in research test programs but have not been tested under entry conditions except for the SV-5 PRIME test vehicle (ref. 28).

The only winged entry vehicles which have been flown were the ASSET delta-wing vehicle (ref. 29) and the X-15 rocket research airplane. The X-15 experience is well documented (refs. 30–42). However, this vehicle explored only the lower portion of the entry corridor (see fig. 1).

While actual experience is limited, it is invaluable in assisting the designer in exploring the potential of interactions for future vehicles. In this monograph, interactions unique to entry vehicles are reviewed in terms of design and applicable flight experience.

2.3.1 Structural Feedback

Structural feedback problems manifest themselves as oscillations caused by either the gross vehicle or local body deformations being reinforced by the control system. Analysis of these problems requires knowledge of the vehicle vibration modes, frequencies, and damping coefficients. The determination of these structural characteristics and their application in interaction analysis is discussed in references 3 and 5. The design process outlined in Section 2.2 is used to prevent structural feedback difficulties.

It is emphasized that proper analysis of the interaction of the control system and the structure not only can prevent structural feedback problems but also can result in control system techniques which can add damping to the vibration modes and limit the structural load levels. These techniques have been widely used in launch vehicle control system design (ref. 1) and to a limited extent in aircraft, principally in design modifications to existing systems (refs. 43–45). Research is currently being conducted on the design of a control configured vehicle (CCV) in which the structure and control system are to be designed to effect mutual benefits (refs. 46 and 47). These control system techniques may be useful in reducing structural loads (which can result in reduced structural weight and increased payload), in extending fatigue life, and in improving the ride and flying qualities of manned vehicles (refs. 48 and 49).

Most of the structural feedback design problems are similar to problems encountered in high-speed aircraft and launch vehicles (ref. 50). Applicable experience from entry vehicle missions is very limited, most of the experience being on research entry vehicles. Structural feedback problems may be conveniently divided into vehicle (that is, gross or total) deformation problems and local deformation problems.

2.3.1.1 Vehicle Deformation

Gross vehicle deformations can cause structural feedback in a number of ways. Several of these are described in this section.

Vibration Mode Characteristics

The analytical determination of structural feedback by the modal coordinate method requires that the vibration mode characteristics be carefully selected so that important contributions are not neglected. Selection of modes is often based on a study of the modal gains as was done for the

Titan III-C and Saturn V launch vehicles. Modal gain studies are usually supported by examination of modal frequency, modal energy, the effect of aeroelastic modes on stability and control derivatives, and the effect of higher frequency modes on static deformations. Coupled vehicle modes are required to properly assess structural feedback and are calculated by computer programs such as NASTRAN (ref. 51). The importance of fuselage flexibility is amplified for vehicles such as the XB-70 aircraft.

Aerodynamic forces acting on a flexible structure alter the vibration characteristics and can cause coupling of low-frequency modes and rigid-body pitching and plunging modes resulting in static aeroelastic deformation of the body. Aeroelastic effects are discussed in Section 2.3.2. Distributed aerodynamic forces are normally included in equations of motion used to describe structural feedback.

During an entry mission, expenditure of propellants is usually the most significant cause of changes in mass distribution, which can significantly alter the vibration characteristics. The mass distribution can be held within tolerable limits by controlling the propellant center of mass. One possible method is that of fuel transfer (ref. 52), in which fuel is moved from one tank to another in order to maintain an appropriate center of mass. This method is incorporated on the F-4 aircraft and the Concorde supersonic transport. Another method often used in aircraft is fuel sequencing, in which fuel or propellant is used from tanks on a preprogrammed basis. This technique has been used on the DC-8 commercial jet airliner and the XB-70 and B-58 aircraft.

The effort required for prediction of vibration modal data and the accuracy of the predictions are dependent on the vehicle configuration, particularly in a varying temperature environment. Aerodynamic heating introduces additional complexity and adversely affects the computational accuracy of the modal data. If high accuracy in predicting structural characteristics cannot be attained, the control system is designed to tolerate a wide range of parameter variations. Typical data is presented in Table 1 to illustrate the variation in modal data for large flexible aircraft.

Vibration modes are included in simulations to evaluate interaction; however, it is not common practice to simultaneously simulate the six rigid-body degrees of freedom and all the selected vibration modes. Usually the equations of motion can be linearized so that the rigid degrees of freedom can be examined in less complex form. In some cases, however, because of the nature of the vehicle, the full six-degree-of-freedom simulation, including vibration modes, is used. For example, in order to evaluate the digital flight control system for the Titan III-C launch vehicle prior to its first flight, the simulation included: the six rigid-body degrees of freedom; time-varying vibration modes, namely, three modes in pitch, three modes in yaw, and one mode in roll; time-varying aerodynamic, weight, and thrust properties; winds and offsets; actual engine/actuator system for each flight phase; autopilot sensors; actual flight article digital computer and its software; and a simulated inertial platform.

Structural damping is a nonlinear function of amplitude and cannot be calculated. Values for modal damping ratio ($\zeta = c/c_c$) may be based on past experience, but linearized modal damping estimates are usually based on test measurements. These measurements are generally lacking for high temperatures. Proportional damping models are usually used; that is, an equivalent viscous damping factor is applied to each mode. Values of 0.005 to 0.015 are representative of structural

TABLE 1. — Vibration Modal Data

Vehicle	Closed-Loop Rigid-Body Frequency (Hz)	Vibration Mode	Frequency[a] (Hz)	Damping Ratio[b] c/c_c	
B-52 LAMS (load alleviation and mode stabilization), longitudinal[c]	0.46 (Short period)	1	1.20	0.122	
		2	1.93	0.049	
		3	2.02	0.019	Calculated
		4	2.34	0.016	
		5	2.40	0.071	
		6	3.01	0.143	
		7	3.09	0.023	
		8	3.46	0.055	
		9	5.33	0.059	
		10	5.79	0.029	
B-52 LAMS, lateral-directional[c]	0.231 (Dutch roll)	1	1.33	0.053	
		2	1.95	0.069	
		3	2.04	0.034	Calculated
		4	2.03	0.129	
		5	2.62	0.051	
		6	2.64	0.114	
		7	3.10	0.070	
		8	3.40	0.079	
		9	4.08	0.048	
		10	4.99	0.086	
XB-70 ILAF (identically located acceleration and force), longitudinal[d]	0.20 (Short period)	1	2.37	0.033	Test
		2	3.78	–	
		3	5.29	0.030	
		4	5.85	–	
		5	6.96	–	
		6	7.54	–	

[a]Calculated values

[b]Total damping ratio (structural and aerodynamic).

[c]Flight condition: weight = 159 500 kg (350 000 lb), velocity = 180 m/sec (350 knots indicated air speed), altitude = 1220 m (4000 ft) (ref. 43).

[d]Flight condition: weight = 172 500 kg (379 614 lb), Mach = 1.60, Altitude = 12 200 m (40 000 ft) (ref. 53).

damping ratios used for aircraft design (e.g., a value of 0.01 was used for the XB-70, and B-52 values were in the range 0.005–0.015). These values are applicable for winged entry vehicle structures.

Sensor Location

Inertial sensors such as gyros detect both rigid-body motions and flexible-body oscillations. Since for flight path control only the rigid-body motion is needed, undesired control action may result, causing continued or increased structural deformation. For some applications, locations are sought which minimize structural vibration content. However, for systems that are intended to control structural responses, entirely different location criteria exist.

Aircraft have been notably free of structural feedback problems because most aircraft structural frequencies were sufficiently removed from the bandpass of the control system. For larger, flexible aircraft such as the B-52, XB-70, and B-1, which are more representative of proposed manned winged entry vehicles, location of sensors is critical because of the lower structural frequencies these vehicles exhibit. Additional sensors, usually rate gyros and accelerometers, are required to implement a vibration mode control system such as the XB-70 ILAF (identically located acceleration and force) and the B-52 LAMS (load alleviation and mode stabilization). Sensor locations for the XB-70 ILAF, and B-52 LAMS are shown in figure 6. Nine different locations near the elevons of the XB-70 were investigated analytically for various flight configurations in order to determine the optimum location of the sensors for controlling the first three structural modes. The B-52 LAMS flight control system was synthesized using optimal control techniques to minimize structural fatigue damage due to turbulence. Experience with these two aircraft vibration mode control systems (refs. 43 and 45) and with launch vehicle design may be applicable to entry vehicles for improving ride and handling qualities, reducing structural loads, and increasing fatigue life. Studies of the potential value of vibration mode control systems for space shuttle vehicles are reported in references 48 and 49.

Sensor location can also affect reliability and survivability requirements. A research fly-by-wire control system program is using an F-4 aircraft equipped with a quad-redundant sensor system; that is, four rate gyros were provided to sense the same parameter for voting and comparison. In order to insure survivability, the four sensors were mounted at different locations. However, because structural flexibility effects were different at each location, it was not possible to guarantee that all sensors would provide identical signals. As a compromise, the sensors were mounted in a single package designed with stringent physical and electrical isolation of the four channels. A more desirable solution that is being considered for a production system is to incorporate a reference plane that is rigid between left and right sides of the aircraft. Separate rate sensors would be located on each side to provide the required survivability.

Propellant Slosh

Propellant sloshing can be a significant contributor to structural feedback and is, therefore, included in the control system mathematical model as separate degrees of freedom so that parametric studies may be conducted on damping and frequencies. Propellant slosh dynamics are considered by methods such as those presented in references 6 and 54. Proper design of the flight control system can minimize the contribution of propellant sloshing to structural feedback.

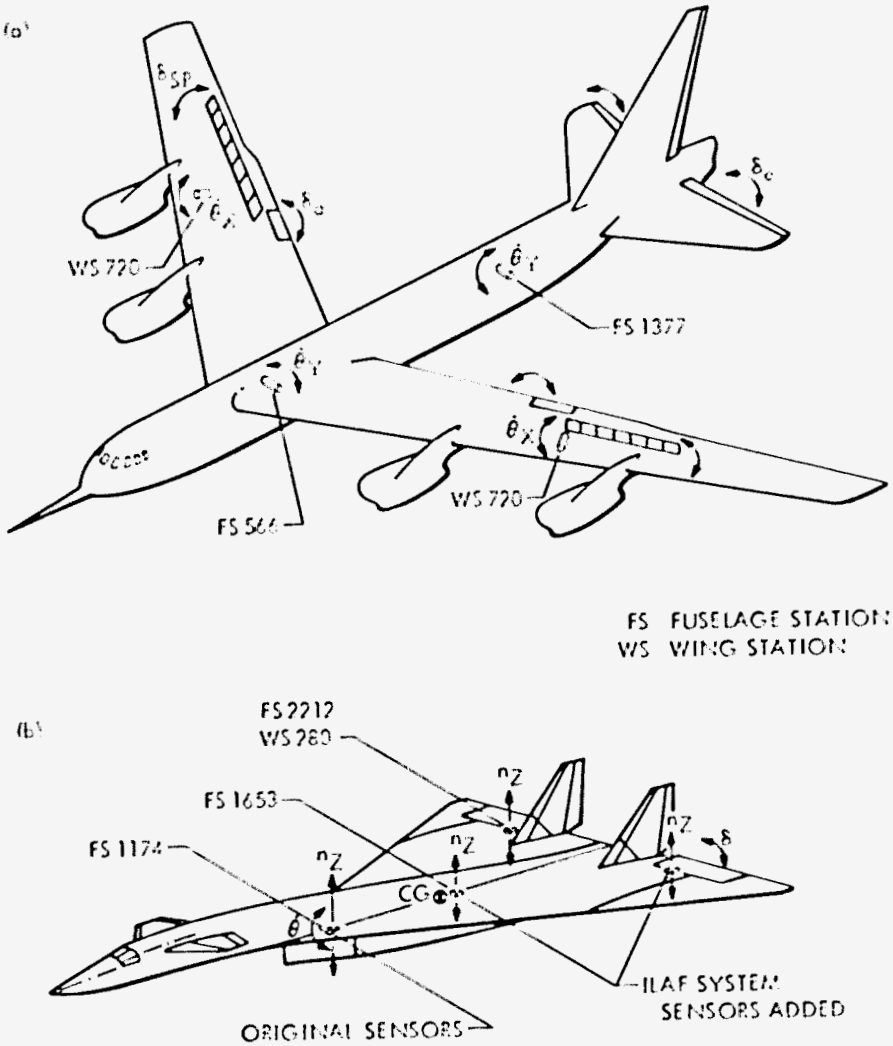

Figure 6.–Sensor locations for aircraft mode stabilization systems: (a) B-52 LAMS (ref. 43), (b) XB-70 ILAF (ref. 44).

Another common technique is to use baffles as a means of augmenting energy dissipation and thereby reducing slosh amplitude (ref. 7). Control system instability or limit-cycle oscillations are possible if baffles are not used or are improperly designed. For launch vehicles, the exponential increase in slosh amplitude is computed as a function of time and frequency to determine the effect of baffle levels. Since slosh damping varies nonlinearly with wave amplitude, a linear analysis using a minimum value for damping usually precedes a nonlinear slosh limit-cycle analysis.

For most entry vehicles, only a relatively small mass of propellants remains on entry. However, this mass can cause large disturbances during the high angle-of-attack entry, during transition to low angles of attack, and during maneuvering prior to landing. For these conditions, the propellants in partially filled, long shallow tanks are susceptible to small excitations resulting in violent,

large-amplitude nonlinear motions (refs. 55 and 56) as well as rapid changes in center of mass. The response may be in the form of normal sloshing or traveling waves which reflect back and forth along the tank. These responses are illustrated in figure 7. Under some circumstances, (e.g., flyback following an aborted mission) the vehicle can be subjected to significant propellant motions because a large mass of propellant will still be onboard. The propellant slosh modes and large shifts in the propellant center of mass may be detrimental to the vehicle stability.

Static Instability

Entry vehicles, in order to meet the stringent constraints imposed by the limited entry corridor, may have to be flown in a statically unstable aerodynamic flight configuration through portions of the trajectory. If static instability is encountered, stability must be provided by the control system (ref. 52) which must be highly reliable. High-gain feedback loops may be required; however, this increases the control system bandpass, which increases the possibility of structural feedback problems.

Static instability problems have been encountered in the design of a winged space shuttle vehicle. A directional instability can occur in the high angle-of-attack condition, in which the vertical tail surface may be masked by separated flow from the fuselage resulting in reduced rudder effectiveness. If the rudder effectiveness is reduced excessively, the problem can be solved through the reaction control system (RCS), although experience in this technique is limited. The most closely related experience was that obtained during the X-15 flight program, in which an adaptive control system was used to blend RCS and aerodynamic control forces (ref. 31).

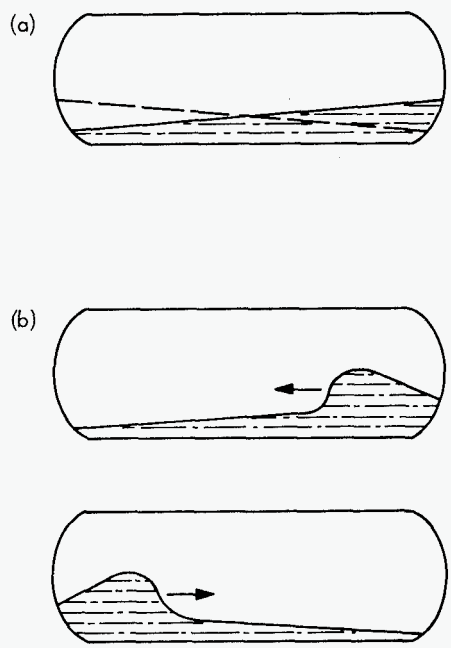

Figure 7.–Propellant slosh in long, shallow tanks (ref. 56): (a) sloshing form of response, (b) traveling wave response.

In those Mach number regions where the rudder is effective for the space shuttle, feedback of lateral acceleration to the rudder or to a blend of the rudder and RCS can provide the desired artificial directional stability, but very high gains are often needed to achieve this objective. Without careful design consideration of flexible body effects, these desired high gains may cause dynamic instabilities of vibration modes.

The reduction of directional stability on space shuttle configurations at high angles of attack leads to a lateral-directional instability in which rolling moment due to sideslip angle increases through the effect of wing dihedral. Since static directional stability is very low, sideslip angle is easily increased by aerodynamic forces or by control system inputs. The induced rolling moment may increase to a level where a rolling moment opposite to that commanded by the control system is produced. The X-2 experimental aircraft had this form of lateral-directional instability, which resulted in loss of the aircraft and pilot (ref. 57).

Studies of a space shuttle vehicle show that during a transition (pitch) maneuver from a high angle-of-attack condition to a cruise condition, the vehicle may be unstable in pitch (ref. 58). If stability during the maneuver is required, gains for pitch control forces have to be increased, with due consideration of interaction with structural flexibility.

2.3.1.2 Local Deformation

The deformation of local structure such as sensor mounts, joints, and linkages as well as major components including wings, tail surfaces, and control surfaces can contribute to structural feedback phenomena (ref. 3).

Resonance Effects

Coincidence of structural vibration frequencies with resonant frequencies in the control system can result in structural feedback. A resonance problem occurred in the X-15 involving the vibration frequency of the horizontal control surfaces, which were used for both pitch and roll control (fig. 8). The inflight vibration of approximately 13 Hz occurred at 51 800 m (170 000 ft) altitude and a dynamic pressure of 4788 N/m^2 (100 lb/ft^2). The vibration was limited in amplitude because of the rate limit of the control-surface actuator and stopped when the stability augmentation system (SAS) gains were reduced and the dynamic pressure increased to about 47 800 N/m^2 (1000 lb/ft^2). It was determined that the lightly damped horizontal-stabilizer surfaces (elevons) were excited at their first natural frequency of 13 Hz. The inertial reaction of the fuselage to this vibration was sensed by the SAS rate gyros so that the SAS sustained the vibration with inputs to the control surfaces. It was determined that an electronic filter, which had been modified to improve the characteristics of control system limit cycles by providing lead at about 3 Hz, increased the gain of the system at the first natural frequency of the horizontal stabilizer, by about a factor of 3, causing the oscillation. The problem was rectified by incorporating a notch filter in the SAS (ref. 36). A similar problem, solved by the same method, occurred in the X-15 reaction augmentation system (ref. 37) and in the X-15 adaptive control system.

Control surface resonance problems need to be considered in the design of structural mode control systems. For example, on the XB-70 HLAF system, elevon motions at the elevon natural

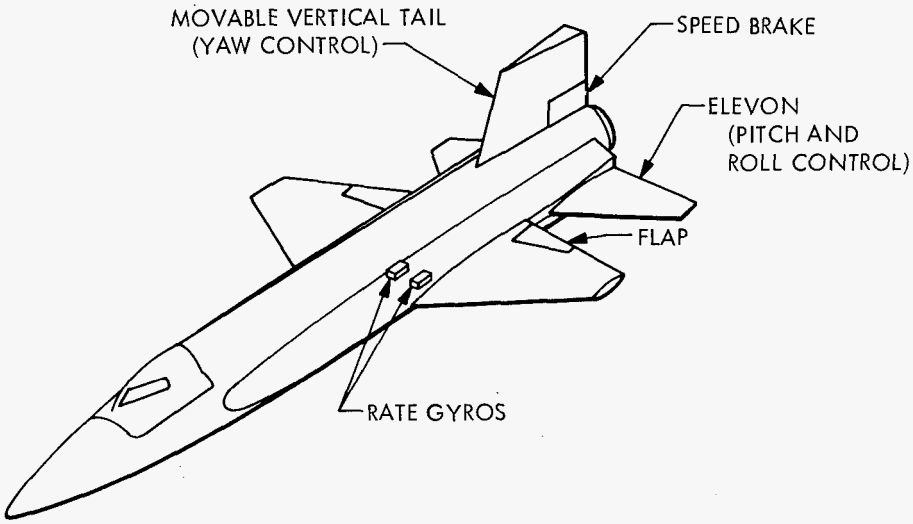

Figure 8.–X-15 rocket research aircraft

frequency generated signals which were sensed by accelerometers in the flight control system. The elevon natural frequency was a result of the elevon flexibility, actuator dynamics, backup structure flexibility, and elevon inertia. The transmission of the feedback signal was reduced by use of a notch filter (ref. 44).

Internal payloads or other major components, particularly those of relatively large mass can exhibit resonant frequencies which can result directly in structural feedback or can affect local deformation characteristics and even overall vehicle response. An example of the latter is included in reference 1, which deals with resonant frequencies of the Apollo lunar module mounted in the Saturn V launch vehicle. This example revealed the need to consider in detail the dynamic characteristics of the payloads and components and their effects on the overall vehicle.

Servoelasticity

Structural feedback involving flexibility in control effector actuators (servos), backup structure, and mechanical linkages is termed servoelasticity. Self-sustained oscillations of control surfaces during ground tests of the M2-F2, HL-10, and X-24A lifting bodies were attributed to excessive flexure in actuator support structure and to slop in control system mechanical linkages to the actuators and in summing junction networks (ref. 23). The critical structural areas were located by means of a detailed test program. As a result, linkages were tightened and support structure stiffened. On the X-24A, notch filters were incorporated in the control system to attenuate response at the critical structural frequencies. The M2-F3 vehicle also used the same basic control system design as the X-24A. As a result of the modifications, servoelastic problems on the M2-F3, HL-10, and X-24A were eliminated.

Sensor Mounting

Local structural deformations can produce erroneous sensor signals or sensor saturation which may seriously affect control system operation. Structural feedback occurred on the M2-F2 lifting

body during ground tests in which SAS gains were set at a high level and the vehicle was shaken. The self-sustained oscillation was partly attributed to servoelasticity (see above); however, the principal cause was a 30-Hz vibration associated with inadequate stiffness of the gyro mounting framework. This frequency was outside the operational bandwidth of the control system but degraded the system's capability and could have produced a structural failure. The difficulty was rectified by stiffening the gyro platform assembly and installing a low bandpass filter in the SAS electronics (ref. 24).

A 26-Hz limit-cycle oscillation encountered on the XB-70 aircraft was attributed to structural feedback. It was determined that aerodynamic excitation of the local wing structure was detected by the ILAF accelerometer located near the elevon (fig. 6) and fed through a compensation network to activate the elevon actuator. This produced actuator motion of sufficient magnitude to excite the local structure near the sensor, resulting in the limit-cycle oscillation. Study of the problem revealed that the local structural response was not readily amenable to analysis. Local response was then investigated by extensive ground and flight tests. The limit-cycle problem was alleviated by redesigning the compensation network to provide a greatly attenuated signal amplitude above 5 Hz (ref. 45).

Effector Inertia

Dynamic instabilities associated with movable or gimballed engines can result in structural feedback. Problems related to engine inertia, engine natural frequency, and structural vibration frequency include the "tail-wags-dog" effect and engine resonance. Entry vehicles to date have not incorporated movable engines; however, these problems have occurred on launch vehicles (see ref. 1) and may be a source of difficulty in future entry vehicle design.

The inertia forces introduced by the motion of massive control surfaces can also cause "tail-wags-dog" instability (ref. 59). On an entry vehicle controlled by aerodynamic control surfaces, an excitation frequency exists at which the control surface inertia reaction force magnitude is equal and opposite to the magnitude of the aerodynamic force produced by the surface. Below this "tail-wags-dog" frequency, the resultant control surface force is proportional to the dynamic pressure, and the control surface effectiveness or vehicle gain increases with dynamic pressure. Above this frequency, the high-frequency vehicle gain is independent of dynamic pressure; that is, control surface effectiveness is independent of the aerodynamic forces it produces. Increases in control system gain will not improve the control system effectiveness. However, the higher-frequency vibration modes might be driven into divergent oscillation by this phase reversal of the apparent control force and increased control-system gain if adequate structural damping or filter attenuation are not present.

2.3.2 Aeroelasticity and Thermal Effects

Aeroelasticity has been successfully dealt with for years in aircraft design (e.g., refs. 60–63). In general, the treatment of aeroelastic effects involves the simultaneous consideration of the aerodynamic forces and structural deformation. The distributions as well as the magnitudes of the aerodynamic forces arising from the rigid-body motion and the deformation of the structure are required. Aerodynamic heating, which can cause large temperature variations in the vehicle and

thus change the elastic properties and stiffness characteristics of the structure, is an additional problem that complicates the computation of elastic deformations (refs. 62, 64–66).

While problems of aeroelasticity are primarily the responsibility of the structural dynamicist or aeroelastician, the control system designer of entry vehicles may find that these problems place constraints on the design. For example, these constraints could include the size and location of the control surfaces or the location of actuators and sensors. In order to provide a better understanding of how aeroelastic phenomena and thermal effects interact with entry vehicle control systems, descriptions of aeroelastic problems are preceded by a brief discussion of aerodynamics and heating.

2.3.2.1 Aerodynamics

Analytical Considerations

No single unified theory is capable of predicting the magnitude and distributions of aerodynamic forces over a wide range of flight conditions and vehicle configurations. Rather, various approximations permit solutions over small ranges of angle of attack, Mach number, altitude, etc. The variance in accuracy of these solutions as well as the determination of the range of applicability of various methods introduces a high level of uncertainty as to the overall accuracy of estimates of vehicle aerodynamic characteristics.

The aerodynamics of lifting entry vehicles are particularly difficult to determine for much of the entry trajectory. Typically, a high L/D vehicle trajectory (see fig. 2) operates at angles of attack of about 60° at hypersonic velocity and about 5 to 10° near Mach 1. Thus a major portion of the entry is accomplished at angles of attack well above the range usually encountered by aircraft in normal flight. At these high angles of attack, flow separation becomes an important factor in predicting the aerodynamic characteristics of the vehicle. On some vehicles, such as the space shuttle, the separated flow can blanket the vertical stabilizer or other stabilization and control surfaces. Instabilities induced by this condition are discussed in Section 2.3.1.1. In addition, at the high angle-of-attack condition, aerodynamic flow about the vehicle in three dimensions becomes important. A five degree-of-freedom analysis of the aircraft response is often required (ref. 67).

Aerodynamic coefficients at high angles of attack cannot be accurately predicted analytically in the subsonic, transonic, and low and medium supersonic speed regimes, so experimental or combined experimental–analytical methods are required. In the high supersonic ($M = 5$ and greater) and hypersonic speed range, modified Newtonian theory (ref. 68) can be used to obtain aerodynamic coefficients; however, experimental methods are used to verify the predictions and to obtain detailed pressure distributions.

For flight conditions at low angles of attack ($<10°$), the magnitudes and distributions of the aerodynamic forces can be determined from linearized small-perturbation theories, except for the transonic speed range ($0.95 < M < 1.2$). Aerodynamic theories based on inviscid perfect fluid are generally acceptable. Steady flow solutions are applicable for static aeroelastic effects; however, unsteady flow solutions should be used for dynamic or oscillatory aeroelastic effects (refs. 69–72).

The literature of aerodynamic theory and testing is replete with numerous studies of various wings and bodies and combinations of the two. In early design, relatively simple calculations of aerodynamic force distributions are sufficient. Usually some form of strip theory is applied (e.g., ref. 70). In the advanced design phase, more elaborate approaches are used. The results are later verified by wind tunnel testing of configurations which appear to be promising in meeting the design requirements.

Experience such as with the XB-70 aircraft has shown that quasi-steady aerodynamics are sufficient for predicting gross vehicle dynamic characteristics including structural feedback. However, unsteady flow theory is essential for accurate computation of the aerodynamics of control surfaces. Aerodynamic prediction methods which have been found to be particularly useful in aeroelasticity studies are summarized in Table 2.

TABLE 2. — Aerodynamic Theory for Aeroelastic Calculations

Speed Regime	Angle of Attack	Theory	References	Remarks
		Steady State		
Subsonic	Low	Strip	60,70	High aspect ratio wings
	Low	Modified strip	70,73	Good for swept wings; high aspect ratios
	Low	Small perturbation (including Woodward's)	74,75,76	Slender bodies of revolution; thin airfoils, arbitrary wing-body combinations
	Low	Quasi-steady	60	Reduced frequencies <0.1
Transonic (refs. 77,78)	Low	Slender body	74	Highly approximate
	Low	Labrujere et al.	79	Wing–body combinations
	Low	Small perturbation	80	Thin sharp-nose bodies
	Low to high	Finite-difference procedure	81,82	Exact method
Supersonic	Low	Small perturbation (including Woodward's)	74,75,76	See Subsonic, above
	Low	Van Dyke's second order	83	Low supersonic where nonlinearities become important
	Low	Shock expansion	74	Good for 2D surfaces; attached shocks
	Low	Method of characteristics	84	3D flows
	Low	Piston	85	Thin wings; $M > 2.0$
Hypersonic	Low to moderate	Newtonian	86	Blunt bodies; $M^2 \gg 1$, $M\delta > 1$ (δ = angle between wind and airfoil surface; radians)
	Low	Small-disturbance	87	Slender bodies and thin wings, 3D flow with shock waves
	High	Modified Newtonian	68	Blunt bodies; $M > 5$

TABLE 2. — (continued)

Speed Regime	Angle of Attack	Theory	References	Remarks
		Unsteady State		
Subsonic	Low	Strip	60,70	
	Low	Tables	88	Incompressible; high aspect ratio wings
	Low	Unsteady potential flow	89	
	Low	Kernel function method	90	Includes control surfaces; compressible flow
	Low	Doublet-lattice method	91,92	Includes control surfaces; compressible flow
	Low	Wagner and Kussner functions	93	Lift growth functions; incompressible flow
Transonic	Low	Potential flow	94	
Supersonic	Low	Piston	85,95	Thin wings; $M > 2.0$
	Low	Kernel function method	96	Control surfaces
	Low	Box method	97,98	Also called Mach box or supersonic influence-coefficient method
Hypersonic	Low to moderate	Newtonian	86,99	Blunt bodies; $M^2 \gg 1$; $M\delta \approx 1$; $10° < \delta < 25°$ (δ = angle between wind and airfoil surface)

Experimental and Empirical Considerations

Wind tunnel tests are conducted to obtain basic data such as lift, drag, and stability derivatives and to verify analytical approaches. Analytical methods are also used to study the variations in configuration and flow conditions which would be too costly to obtain by wind tunnel testing. Dynamically scaled models are often used for wind tunnel tests to determine a number of aeroelastic characteristics; appropriate scaling parameters are required. The two commonly used aerodynamic scaling parameters, Mach number and Reynolds number, are needed as well as three additional parameters: Strouhal number (or reduced frequency), density ratio of testing fluid to material, and material damping coefficient. Additional thermodynamic scaling parameters must be considered when temperature is important.

The aerodynamic problem is sometimes complicated by plume effects of reaction jets and engines, boundary layer/shock wave interference, flow separation, and vehicle-generated turbulence, all of which must be resolved for the flight-approved vehicles. Many of these effects can be neglected in initial analyses in order to establish the basic configuration. As the design progresses, these aerodynamic effects must be considered to determine their importance to aeroelastic phenomena and structural response characteristics.

The plume effects of engines and reaction jets may cause variations in vehicle aerodynamic characteristics (ref. 55). An example illustrating these effects is the entry of Apollo 7, during which more reaction control propellant was expended than predicted. The Apollo simulation was updated to include the interference of reaction jet exhaust on the vehicle flow field. This resulted in trim angle-of-attack changes which caused the autopilot to fire the reaction jet thrusters. The jet interaction torques in combination with the actual wind profile were determined to be the cause of the excessive jet propellant use. Jet interaction effects are discussed in reference 100. Destabilizing aerodynamic forces can also occur owing to separation of the flow induced by the exhaust flow (ref. 101). The force of the reaction control jets may also be modified by interaction with the flow field. Effects related to force modification are discussed in references 102 and 103.

Aerodynamic loads caused by the interaction of shock waves with the boundary layer are generally determined by wind tunnel studies. However, shock wave interactions also cause high-frequency structural excitation or can result in local structural heating which may not be predicted by such studies. An example of the latter occurred on the X-15 aircraft when shock waves generated on a mockup of a ramjet engine mounted beneath the tail section caused extensive damage to the fuselage and horizontal stabilizers because of excessive local stagnation temperatures (ref. 35). Extensive wind tunnel testing prior to flight had failed to predict the extent of heating from shock wave interaction.

Flow separation can cause significant changes in the vehicle aerodynamic characteristics, particularly if control surfaces are involved. Tip-fin flow separation occurred on the HL-10 lifting body (fig. 9), causing the vehicle to be unstable and uncontrollable during the period of separated flow. The problem had been observed in wind-tunnel data, but the severity of the problem was unexpected. The tip fins were modified, resulting in the flow being attached over a greater area to a higher Mach number (refs. 25 and 26). Separated flow effects are difficult to analyze (ref. 104), and wind tunnel tests are usually used to investigate the phenomenon. The importance of Mach number on separation is examined in reference 105.

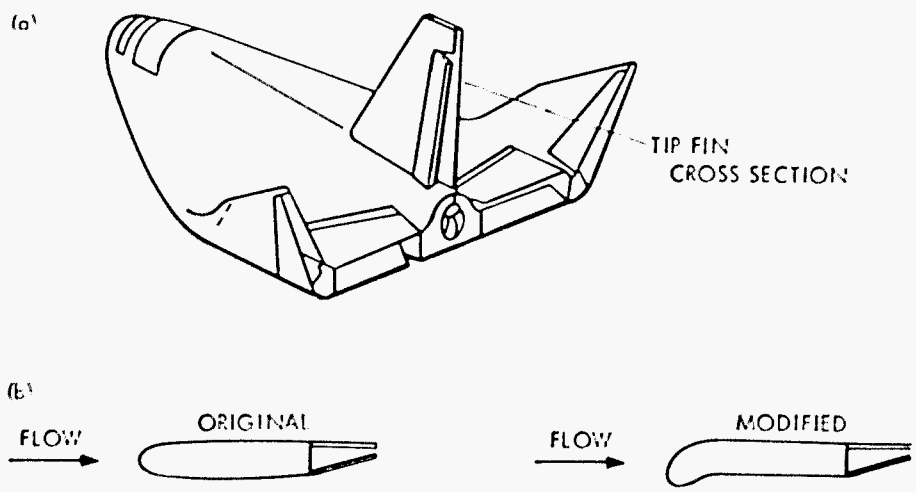

Figure 9.–HL-10 lifting body: (a) lifting body, (b) tip fin cross section.

Vehicle-generated turbulence, which manifests itself as noise and buffeting (refs. 19, 55, 106, and 107), can affect control system performance by excitation of high-frequency vibration modes which cause saturation of sensors. Aerodynamic noise is caused by random pressure fluctuations in the boundary layer at supersonic speeds. Buffeting (ref. 8) usually occurs in the transonic regime as a result of local shock-wave oscillations and of flow separation caused by turbulent flow from a forward portion of the vehicle passing over a lifting surface at the rear of the vehicle or by a shock-induced flow separation. Pressure fluctuations on entry vehicles caused by buffet presently cannot be predicted by aerodynamic theories; wind tunnel data is required to study the effects of buffet.

The variation of lift with angle of attack for wing–body–tail combinations becomes nonlinear because of factors such as local separation of the flow on the wing, separation of the flow on the body, and passage of the tail surface through the wing wake. At present, the lift and drag of arbitrary wing–body–tail combinations in the nonlinear lift region cannot be predicted by purely theoretical means in any flight regime. Existing methods are either correlations of experimental data such as presented in reference 108 or semianalytic, in which certain features of the problem, such as viscous effects, are ignored. An empirical method is presented in reference 109, in which the nonlinear lift of wing–body combinations in supersonic flow is reasonably correlated using a cross-flow term based on the normal force of an equivalent circular cylinder. The method presented in reference 110 analyzes the nonlinear characteristics due to component interference or the three-dimensional character of the wing flow field near the tail.

2.3.2.2 Aerodynamic Heating

Aerodynamic deceleration of an entry vehicle produces tremendous amounts of heat (ref. 9). Elevated temperatures of the primary load-carrying structure cause changes in the modulus of elasticity which result in changes in structural stiffness. Since the temperature is not equally distributed to all parts of the structure, a temperature gradient exists which causes an overall change in the stress pattern throughout the vehicle. This results in changes in vehicle shape as well as alteration of the dynamic characteristics of the flexible structure. The temperature distribution is also time-dependent, with the result that transient stresses cause variations in the stiffness distribution of the structure (refs. 39 and 62). From the standpoint of vehicle control, these temperature effects manifest themselves as changes in the static and dynamic characteristics of the vehicle which may seriously affect the range of design parameters and their associated tolerances.

The effects of temperature on structural stiffness are included in the analysis used to determine structural characteristics (refs. 3 and 111). This may be accomplished by applying a constant temperature across an entire section of the vehicle or by accounting for discrete temperatures and temperature gradients at lumped-mass stations or at structural node points. If temperature varies slowly with time, time slice techniques are usually used to determine the change in structural dynamic characteristics (ref. 3).

Testing to determine aerodynamic heating effects can be conducted in special wind tunnels, plasma arc facilities, and radiant heat facilities. However, tests are usually very limited in scope, are costly, and generally are not conducted under combined load conditions. Therefore, much

reliance is placed on analysis (ref. 111), on component testing when feasible (e.g., ref. 39), and on thermal protection systems.

Entry vehicles require thermal protection systems (TPS) to prevent excessive heat input to the structure, payload, and crew (refs. 10 and 112). Two types of TPS can be distinguished, radiative and absorptive. The absorptive systems include heat sink, film and transpiration cooling, ablative, and convective. Reference 10 describes the advantages, limitations, and general use of each of these systems. Depending upon the particular type of TPS employed, the primary load-carrying structure of the entry vehicle is subjected to elevated temperatures of varying degree. The TPS design affects the weight distribution of the vehicle and possibly the stiffness. Consequently, it may have a pronounced effect on the flexibility characteristics and can seriously affect control system design.

2.3.2.3 Static Aeroelastic Problems

Thermal Expansion

The effects of aerodynamic heating may be quite unexpected. For example, during a high-temperature flight of the X-15 aircraft, the main landing gear extended when the aircraft velocity was in excess of $M = 4$, causing large changes in airplane trim and drag. Inadvertent extension of the nose gear due to heating on a similar flight was also experienced (ref. 38). Vehicle stability was affected, but the pilot was able to maintain control and effect a safe landing. Detailed evaluation of the event, subsequent to the flight, revealed that overall elongation of the fuselage caused by thermal expansion had caused loads in the cables which released the gear. The cables, which were inside the fuselage, had not been subjected to high external temperatures. As the fuselage elongated, it, in effect, created a tension in the cables comparable to that caused when the pilot pulled the release handle for gear extension. The problem was solved by redesigning the cable release and changing the preloads in the release cable.

The thermal environment of entry vehicles can cause excessive expansion of connections, resulting in binding. For example, free-play was designed into the flap hinges and actuation connections of the SV-5D PRIME vehicle to prevent binding. However, in this instance, excessive free-play resulted in limit-cycle oscillations of the surface during lower temperature operation (ref. 3).

Effects on Trim

The aerodynamic control surfaces of an entry vehicle, in addition to providing forces and moments for maneuvering, are used to trim the vehicle for steady-state flight conditions, that is, to put the vehicle in equilibrium for a given flight condition. However, elastic deformation of the entry vehicle structure induced by aerodynamic loads and heating can result in movement of the aerodynamic center of pressure and can change the lift effectiveness characteristics of lifting surfaces. These effects cause changes in the vehicle trim characteristics.

Large trim changes were experienced on the XB-70 aircraft (see fig. 6) in the transonic speed range (ref. 113) at high dynamic pressure flight conditions. These trim changes were attributed

in part to aeroelastic effects of the fuselage and the canard (ref. 66). The canard was geared to the elevons for improved longitudinal trim and control.

A similar problem was anticipated for the X-20 Dyna Soar entry vehicle, in which thermal effects resulted in bending of the fuselage in a so-called rocking-chair mode. As a result, the longitudinal trim characteristics were grossly affected.

Aeroelastic effects on entry vehicles can cause trim changes of aerodynamic surfaces which, even at low dynamic pressures, can cause considerable activity of the reaction control system if this condition is not anticipated. A similar occurrence was encountered during a high-altitude flight of the X-15 aircraft when the aerodynamic controls were inadvertently trimmed for zero angle of attack by the pilot while he attempted to maintain an angle of attack of 10° with the RCS during entry. As a result, a large amount of RCS propellant was expended overcoming the aerodynamics of the airplane (ref. 37).

Control Surface Effectiveness

The available control forces and moments for a given control surface deflection are a measure of the control effectiveness. The effectiveness is changed by movement of the aerodynamic center of pressure and center of mass, by variation in Mach number, dynamic pressure, and angle of attack, by distortion of the control surfaces, by overall deformation of the vehicle, and by saturation (aerodynamic stalling or exceeding control effector limits). Variation in control surface effectiveness results in an effective change in control loop gain. In general, this can often result in control loop stability problems if the effective gain is increased, or in reduced control accuracy as well as stability problems if the effective gain is decreased. Control effectiveness is reduced if excessive surface deflection is required for trim because of aeroelastic effects. In aircraft and missile design, a rule of thumb for preliminary design is to provide sufficient control force capability so that the desired trim and control capability exists, assuming one-third of the deflection will be lost due to overshoot, aeroelasticity, biases, etc. Of these effects, aeroelasticity is usually the largest. Generally, detailed analyses are conducted using aerodynamic stability derivatives corrected for the effects of structural flexibility (see next subsection) in order to meet effectiveness criteria such as given in reference 114.

The reduction in control effectiveness with increasing dynamic pressure is illustrated in figure 10 for an aircraft similar to the XB-70 (ref. 66). The control effectiveness is shown as the ratio of the flexible-body pitching moment effectiveness parameter to the same parameter for a rigid body. As indicated in figure 10, pitch control effectiveness was improved by gearing the canard to the elevons.

Aeroelastic effects can reduce control effectiveness to the point where the control surface is totally ineffective and beyond which the effect of the control input is reversed (refs. 60 and 62). This phenomenon is an important design consideration in high-speed aircraft, particularly for ailerons and elevons. Aileron reversal was a problem in the B-47 aircraft (ref. 63). A less common form of reversal is that experienced by the elevators used for longitudinal control. Generally, the horizontal stabilizers on which the elevators are mounted are less susceptible to elastic deformations serious enough to cause reversal. However, a reversal condition was predicted for the elevons of an aircraft similar to the XB-70 caused principally by flexure of the fuselage (ref. 66).

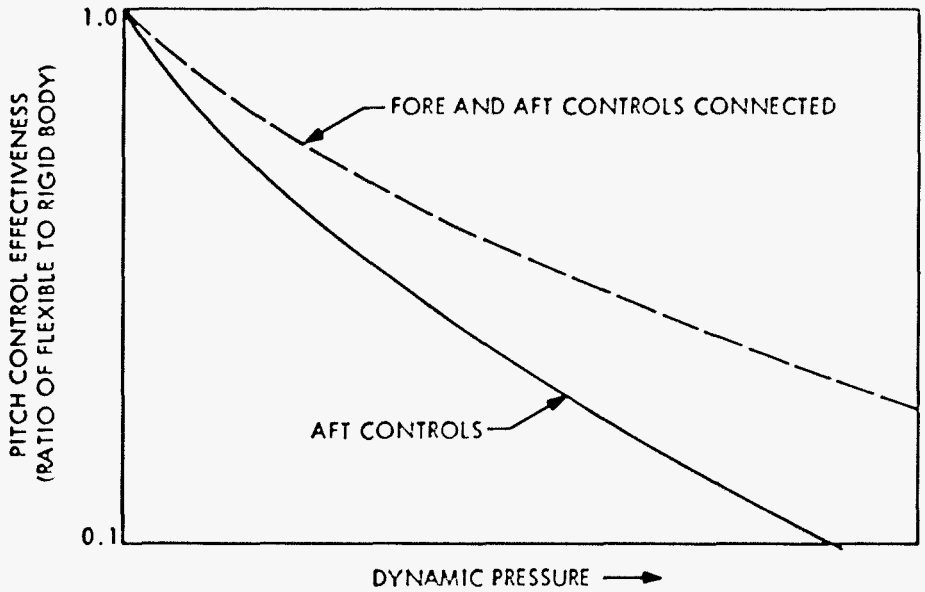

Figure 10.—XB-70 type airplane relative pitch control effectiveness—high subsonic Mach number (ref. 66).

Stability Derivatives

The equations of motion for stability and control investigations are written with aerodynamic forces and moments expressed in terms of stability derivatives (refs. 115 and 116). To present the equations in this form, it is assumed that the aerodynamic forces do not change rapidly and that they are functions of the instantaneous values of the disturbance velocities, control angles, and their derivatives. The functions are expanded in a Taylor series and linearized; the stability derivatives are the resultant series coefficients.

Stability derivatives are usually obtained from wind-tunnel studies of rigid models and theoretical analyses. When possible, these data are verified by flight test data (ref. 40). The derivatives are essentially invariant for constant Mach number but often vary with angle of attack, sideslip angle, control deflection, and center of mass. However, aeroelastic effects can significantly modify the rigid-body values, resulting in stability and control difficulties (ref. 66). The flexibility effects are generally investigated as a function of dynamic pressure and Mach number. Successful techniques for determining aeroelastic effects on stability derivatives are based on the use of aerodynamic and structural influence coefficients (refs. 66, 76, 117, and 118). Figure 11 from reference 119 illustrates both the effects of flexibility on the lift-curve slope, and the comparison of theoretical calculations with wind-tunnel data.

2.3.2.4 Dynamic Aeroelastic Problems

Classical Flutter

A dynamic instability that can occur on lifting entry vehicles is classical flutter (i.e., at low angles of attack). Flutter is a self-excited phenomenon which involves coupling between vibration

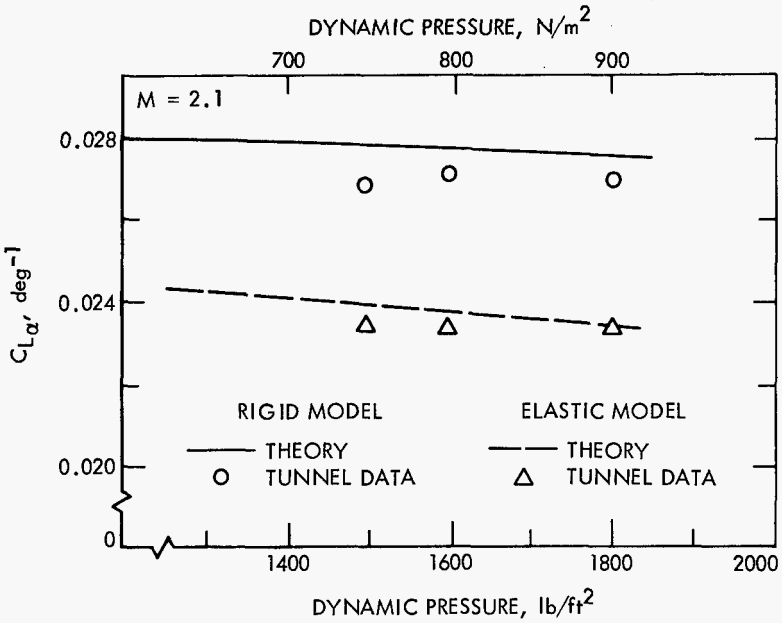

Figure 11.–Effects of flexibility on lift—curve slope of an elastic SST model (ref. 119).

modes through aerodynamic forces (ref. 60). It is often violent and destructive, and therefore it is required that the design be free of flutter within the design envelope, as specified in references 11, 12, and 120.

Control surfaces may participate in the flutter. Such was the case on a KC-135 airplane which experienced flutter involving body bending and one of the control surfaces (ref. 50). The problem was unforeseen because certain compressibility effects had not been considered in calculating control surface hinge moments. The addition of control surfaces dampers eliminated the problem.

In general, the participation of control systems in flutter instabilities is restricted to control surface interaction with surrounding structure through flexibility and aerodynamic forces. However, flutter may have indirect influence on the control system design. For example, the location and dynamic characteristics of control surfaces are often affected by flutter considerations. Hence, since these are elements of the control loop, the flutter problem may indirectly affect the control system design by imposing constraints or limitations. Similarly, modifications to the control system, particularly to the aerodynamic control surfaces, may be detrimental to the flutter characteristics of the vehicle, thereby restricting the control system design.

Flutter is basically the concern of the structural dynamicist and is often eliminated by increasing the structural stiffness or providing proper balance weights (ref. 12). Aerodynamic heating, however, causes a reduction in stiffness by reducing the modulus of elasticity and by a temporary loss of stiffness caused by transient thermal stresses. Reduction in stiffness caused by a thermally induced change in material modulus of elasticity adversely affected the flutter characteristics of the X-15 horizontal stabilizers. As a result, approximately 13.6 kg (30 lb) of material was added

to each stabilizer to increase the stiffness and alleviate the adverse effect on flutter. Transient heating effects on flutter have been studied in wind tunnel tests (refs. 121 and 122).

Some recent research results have been obtained which indicate possible benefits of active control of flutter (refs. 123–125). The flutter suppression system involves sensors to detect flutter motion and a control loop to command control forces to damp the oscillation. The concept is similar to that of the B-52 LAMS and XB-70 ILAF systems used for mode stabilization (refs. 43 and 44). In the flutter suppression concept, unstable aeroelastic roots are included directly in the control system stability analysis. Because of the potentially destructive nature of flutter, a highly reliable control system is required. Although this type of active flutter control is still in the research stage, it may be a very useful technique for future vehicles.

Stall Flutter

A potential aeroelastic problem on entry vehicles is stall flutter (ref. 126). This form of flutter occurs when the flow over the lifting surface is stalled for at least part of each cycle of oscillation. It may be particularly severe for straight winged entry vehicles at high angle of attack; however, highly swept or delta winged vehicles may not encounter the phenomenon. The oscillation, which involves the basic torsion mode of the surface, is often marginally stable if adequate structural damping is not provided; hence, the control system could destabilize the flutter. If the stall flutter condition does not diverge, it appears as a high-frequency input relative to the control system bandpass which can cause sensor saturation.

Stall flutter speeds are very configuration-sensitive and are presently not amenable to analysis because of the lack of suitable aerodynamic theory for high angles of attack. In addition, Reynolds number is a very important parameter governing the onset of the separated flow which occurs during stall flutter. Existing wind tunnels do not permit simulation of full-scale vehicle Reynolds numbers during stall flutter tests. Estimates are usually based on limited test data (refs. 127 and 128) or are obtained from full-scale vehicle tests.

Panel Flutter

Panel flutter is an aeroelastic instability of structural panels. It is usually limited in amplitude but can cause failure through structural fatigue such as occurred on the X-15 aircraft (refs. 33, 41, and 129). Consequently, it can adversely affect the thermal protection system as well as aerodynamic control surfaces. Generally, it can cause an undesirable vibration environment, with effects similar to aerodynamic noise and buffet. Panel flutter is very sensitive to boundary conditions and to thermal inputs which can cause buckling (ref. 130). Criteria and recommended practices for structural design to prevent panel flutter are presented in reference 13.

Control Surface Buzz

Buzz is single-degree-of-freedom flutter of a control surface often attributed to oscillating shock waves (refs. 60 and 131). It is usually a problem in the transonic speed regime; however, there

is some evidence of the phenomenon at hypersonic speeds (ref. 132). Buzz is detrimental to control system performance through reduced control surface effectiveness and as a source of high-frequency vibration which can saturate sensors. Buzz is not expected to be a problem in entry vehicles such as the space shuttle since actuator stiffness required to move control surfaces during the entry transition maneuver will probably be sufficient to prevent buzz. Control surface buzz alleviation is discussed in references 12 and 131.

2.3.3 Other Interaction Effects

Interaction of the control system and the structure may be affected by other factors or effects which are often encountered in aircraft, launch vehicle, or spacecraft design. These factors include transient response, pogo, environmental phenomena (predominantly winds), and vehicle design considerations such as flying and ride qualities, pilot inputs, digital autopilot considerations, and spin effects.

2.3.3.1 Transient Response Problems

Transient factors imposed on the vehicle from various sources may initiate flexible structure responses which can interact with the control system. These include thrust and gas jet reaction control system (RCS) transients, control effector blending, residual propellant loading and staging (see ref. 15).

Thrust transients (e.g., engine ignition, engine shutdown, and uneven burning) can create significant loads or vibration levels (ref. 14). The RCS is used at high altitudes where aerodynamic controls are ineffective. An operating dead band is usually provided to reduce susceptibility to low-amplitude rigid-body oscillations and structural vibration inputs. The RCS itself may excite structural vibration if cyclic firing of the gas jets is at a resonant frequency of the structure. Also, RCS vibration can result in sensor saturation if sensors are located in close proximity to the RCS jets. RCS experience on the X-15 aircraft during entry is reviewed in references 31 and 37.

The X-15 research airplane used a blended control system in which both movable aerodynamic surfaces and jet thrusters were used to provide control torques. The two systems had nearly equal effectiveness when the dynamic pressure was 4.9 N/m^2 (10 lb/ft^2), but the pilots used the jet thrusters at much higher dynamic pressures (ref. 31). Transients associated with system operation are similar to those discussed in the previous paragraph. In addition, switchover from one type of control effector to the other, as well as simultaneous operation of aerodynamic controls and RCS, can result in transient response of the vehicle. The switchover problem in launch vehicles is discussed in reference 1.

Staging or separation of bodies will result in transient inputs to the control system which can cause undesired response or may saturate sensors. Staging loads are discussed in reference 15.

Any transient can have an effect on residual propellants. The effects of residual propellants (propellant slosh) are discussed in section 2.3.1.1.

2.3.3.2 Pogo

An oscillation involving the coupling of the entry vehicle longitudinal vibration modes and the propulsion system which provides thrust along the longitudinal axis is commonly referred to as pogo. Pogo is basically a structure/propulsion system interaction. However, if it occurs, it may cause saturation of control system instruments and sensors and may actually induce control system response if coupling of lateral and longitudinal modes is present. Pogo has been observed in several launch vehicles (ref. 1) during ascent. It may also be a problem for entry vehicles during an abort in which excessive fuel remains. During normal entry there is no pogo problem because there is no thrust during that period. See reference 16 for a more detailed discussion of pogo.

2.3.3.3 Winds

Winds are an important consideration in the design of the control system of lifting entry vehicles below 24 400 m (80 000 ft) in altitude (ref. 133). These winds can be separated into low-frequency inputs (wind shears) and high-frequency inputs (gusts), both of which can excite the vehicle vibration modes. Both horizontal and vertical wind shears are important. Gusts are modelled either as discrete gusts or as continuous turbulence. The discrete gust assumes the gust has a distinctive shape and maximum velocity. A one-minus-cosine of a wavelength shape has been applied widely in the design of aircraft primarily for the evaluation of vertical gust effects and is being recommended for the rigid-body design analysis of the proposed space shuttle vehicle. A continuous turbulence model such as that recommended for the flexible body analysis of the space shuttle (ref. 11) is desirable for a flexible vehicle since this model is basically a spectrum of small-scale gust motions which can excite the structural vibration modes. The power spectral techniques of generalized harmonic analysis have been applied for expressing the continuous turbulence model (ref. 134). It should be noted that reference 134 was concerned with flight under airline conditions below 12 200 m (40 000 ft). Power spectral presentations are dependent on measurements made inflight such as determined by the Air Force ALCAT programs and as reported in references 135 and 136. In general, except for limited data gathered at high altitude by aircraft such as the XB-70 (ref. 137), the turbulence structure above 18 300 m (60 000 ft) is relatively unknown.

Response of a flexible entry vehicle to turbulent atmospheric conditions can increase structural loads and fatigue as well as degrade the ride and flying qualities of manned vehicles. These detrimental effects can be improved through the use of active mode control systems such as investigated by the B-52 LAMS (ref. 43) and XB-70 ILAF (ref. 44) aircraft programs.

2.3.3.4 Flying (Handling) and Ride Qualities

If a pilot is an integral part of the control system loop during any portion of the entry vehicle flight, then flying qualities become an important consideration in the control system design (ref. 138). Flying qualities do not cause interactions but may be adversely affected by interaction of the flexible structure with the control system. Thus an interaction may be acceptable from a control and stability standpoint but unacceptable from a flying qualities viewpoint. Conversely, control system changes to enhance flying qualities can result in an increased system bandpass and, therefore, greater susceptibility to interaction.

Flying qualities of entry vehicles (ref. 139) are usually based on aircraft specifications (refs. 140 and 141) and then evaluated in simulations with the pilot in the control loop. The specifications are then modified as necessary for the particular vehicle and mission being planned. Reference 142 illustrates differences in requirements for lifting bodies as compared to aircraft. Flying quality specifications have been prepared for the manual mode of the space shuttle orbiter (ref. 143).

Ride quality also is a prime consideration in the design of manned entry vehicle control systems. The ride quality, as measured in terms of frequency and acceleration, affects both passengers and crew. Structural flexibility can impose significant loads on the pilot which differ significantly from those at the center of mass as seen in figure 12 for the XB-70 aircraft (ref. 137). In addition, if the vibration frequency is in the neighborhood of the natural frequency of the human operator (3–10 Hz), his performance can be degraded. Aircraft ride quality criteria for both lateral and vertical vibrations are presented in reference 144.

Handling and ride qualities of flexible aircraft can be improved through the use of mode stabilization systems such as the B-52 LAMS and XB-70 ILAF. Figure 13, from reference 45, illustrates the reduction in measured acceleration response at the pilot's station of the XB-70 aircraft which results from use of the ILAF system (note: figs. 12 and 13 are for unrelated flight conditions). Application of the LAMS and ILAF techniques in design may affect the overall vehicle configuration and allow significant improvement in handling and ride qualities. These design concepts, which are being investigated in the control configured vehicle (CCV) program (ref. 46), may be valuable for entry vehicle design.

2.3.3.5 Pilot Inputs

Pilot inputs to the control system to perform maneuvers can induce loads on the structure which cause deformation. Abrupt inputs can cause transient vibration response of the control surface as well as induce elastic deformation, either of which can adversely affect interactions. Since maneuver loads are highly dependent on pilot technique, they are usually determined by simulation studies.

Phasing of pilot inputs and the response of the control system forces can result in a sustained or divergent oscillation, referred to as pilot-induced oscillation. Oscillations of this type occur within a frequency bandwidth of 1–2.5 Hz. Although pilot-induced oscillation is usually a rigid-body problem such as experienced on the X-15 airplane (ref. 42) and M2-F2 lifting body (refs. 26 and 27), it can be adversely affected by structural flexibility.

2.3.3.6 Digital Autopilot Considerations

Interactions can be influenced by the use of sampled data control systems, i.e., digital autopilots which use onboard digital computers as the major components (ref. 18). Digital autopilots have been used on launch vehicles such as the Titan III-C and on the Apollo spacecraft and are being considered for the space shuttle vehicle. It is expected that these systems will find wide application in complex entry vehicles because of the versatility afforded by the digital computer.

The autopilot sampling rate and quantization levels as well as transport delays and lags are important parameters which can affect interaction. The sampling rate is chosen to be sufficiently high in

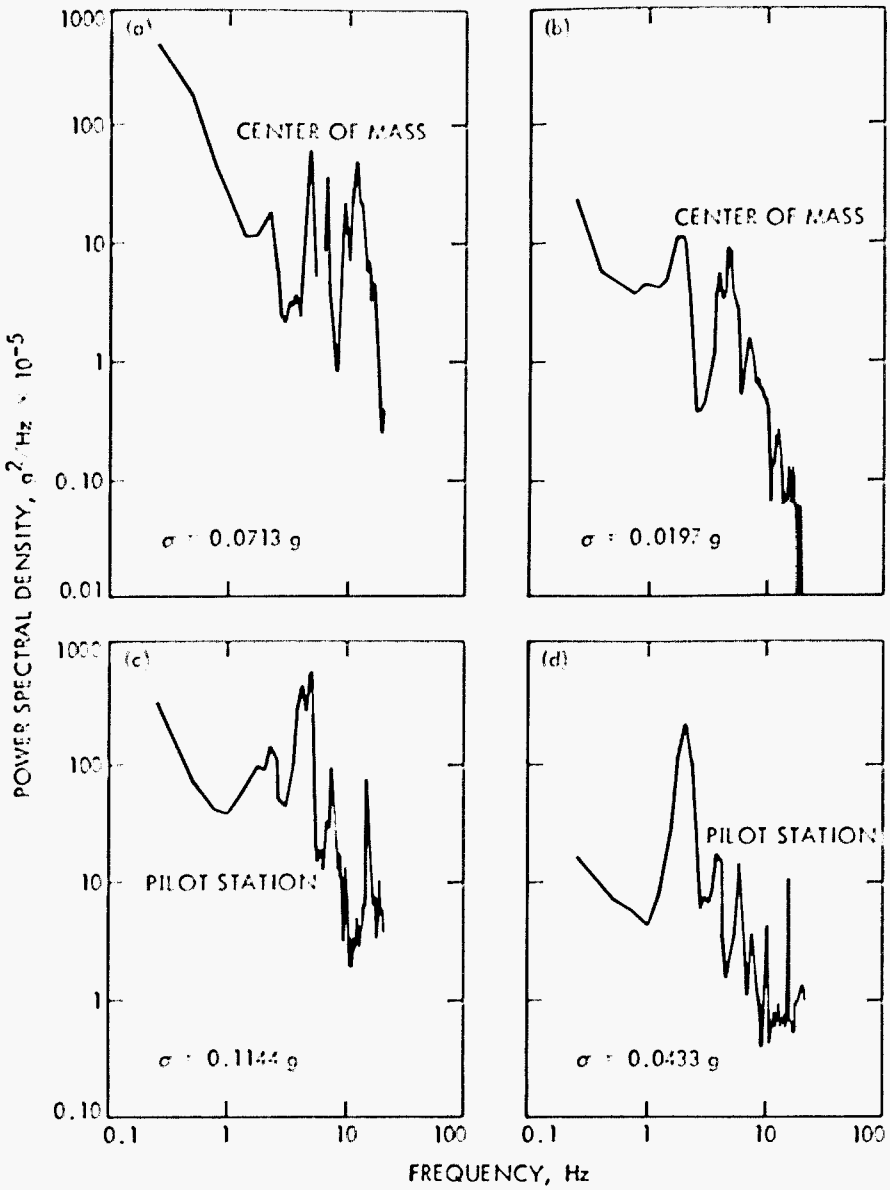

Figure 12.–Comparison of response at pilot station and center of mass to turbulence—XB-70 aircraft (ref. 137). (a) normal acceleration, (b) lateral acceleration, (c) normal acceleration, (d) lateral acceleration.

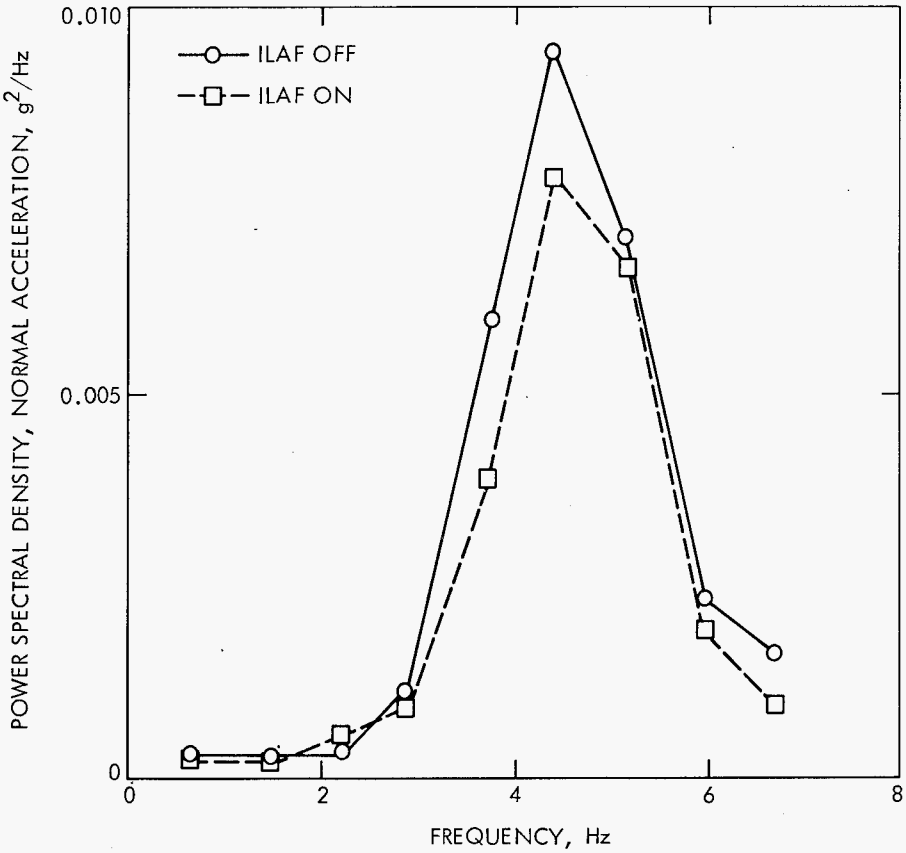

Figure 13.–Effect of XB-70 ILAF on response at pilot station during light turbulance (ref. 45).

order to detect the desired frequencies; if the rate is too low, frequency aliasing (foldback) can cause undesired effects. Aliasing is a condition in which high-frequency power in the signal is transformed to lower frequencies. Thus, high-frequency inputs caused by structural vibration or by noise sources may appear within the bandpass of the autopilot and may result in undesired responses. The problem is usually remedied by filtering of input signals to the autopilot before sampling to eliminate high-frequency content. The quantization level can also cause problems. If a coarse quantization level is chosen, frequency information can be lost. This is particularly important in mode stabilization systems which are based on accurately detecting the vibration frequencies. In addition, the combination of quantization level and sampling rate can result in frequency inputs being detected but at erroneous frequencies and amplitudes. This in turn causes erroneous control system response which can seriously degrade operation of the vehicle or may cause excitation of the vibration modes. For a more in-depth review of digital autopilots see reference 145.

Digital autopilot participation in interaction is usually studied by simulation (see Section 2.3.1.1, Vibration Mode Characteristics). A bit-by-bit simulation of a digital autopilot computer is an invaluable aid in developing the autopilot software. This type of simulation proved its effectiveness in the Apollo digital autopilot development program (ref. 146).

2.3.3.7 Spin Effects

Although spin stabilization is not presently planned for use on entry vehicles, it may be considered for unmanned vehicles since it is a simple, effective method of achieving stabilization if payload considerations permit. A potential interaction problem is spin resonance, which involves a coincidence between spin rate and natural frequencies of transverse bending modes of slender bodies. This condition results in excessive structural deformation similar to that associated with the critical speeds of a rotating shaft. The phenomenon can be induced in a space environment or it may involve aeroelastic deformations. Spin resonance such as encountered in the flight of a spin-stabilized Scout launch vehicle is investigated analytically in references 147 and 148. Reference 149 also presents an analytical investigation of flutter of rotating bodies.

Spin stabilization of vehicles having propellants or other liquids on board can result in dynamic instability if spin-stabilized about the axis of minimum moment of inertia and if energy dissipation caused by slosh of the liquids is improperly considered (see ref. 2). The instability can result in mission failure because of improper entry conditions or it can adversely affect the trajectories of vehicles entering simultaneously, such as vehicles which separate prior to entry with the resultant possibility of collision during entry. A problem of this type occurred during the Apollo 7 through 11 missions as the command module prepared for entry. Following separation from the service module, it was observed that the service module trajectory characteristics were not as predicted. It was determined that longitudinal sloshing of residual propellants onboard the service module adversely affected the vehicle, which was spin-stabilized about the longitudinal axis following separation. Since this was not the axis of maximum moment of inertia, energy dissipation caused by propellant slosh resulted in the service module spinning about an axis 90° to the desired axis (ref. 150).

3. CRITERIA

The effects of structural flexibility shall be considered in the design of control systems for entry vehicles. The control system shall be designed to account for static structural deformation and either to desensitize the vehicle to structural vibration or to provide damping to the vibration. Interactions between the flexible structure and the control system shall be evaluated by a suitable combination of mathematical analysis, simulation studies, and tests. By these means, it shall be demonstrated that there exists no divergent oscillation or other behavior, involving interaction of the control system with structural flexibility effects of the entry vehicle, which could impair flightworthiness or, if the mission is manned, compromise crew safety. This demonstration shall include an investigation of the structural feedback effects on the control system acting under constraints imposed on the system by stability and response considerations, environment, and specified off-nominal flight conditions. All anticipated flight configurations and modes of operations should be considered.

The entry vehicle control system should be designed to minimize sensitivity to changes in the characteristics of the structure and/or control system hardware and to have sufficient inherent versatility to handle limited changes in guidance and control requirements. Interaction effects should not degrade flying qualities in manned vehicles.

3.1 Control System/Structure Interaction Analysis

Analytical studies using proven methods and mathematical models of sufficient detail and complexity shall be performed to determine structural flexibility effects on the entry control system and to demonstrate acceptable margins and compliance with system requirements and specifications. Forms of interactions known to be detrimental to satisfactory control system performance shall be evaluated and their effects determined. At least the following interaction problems shall be accounted for (if applicable):

- Structural Feedback
  - Vibration mode characteristics
  - Sensor location
  - Propellant slosh
  - Static instability
  - Resonance effects
  - Servoelasticity
  - Sensor mounting
  - Effector inertia

- Aeroelasticity and Thermal Effects
  - Thermal expansion
  - Effects on trim
  - Control surface effectiveness
  - Stability derivatives
  - Classical flutter
  - Stall flutter
  - Panel flutter
  - Control surface buzz

- Other Interaction Effects
  - Transient response problems
  - Pogo
  - Winds
  - Flying and ride qualities
  - Pilot inputs
  - Digital autopilot
  - Spin effects

In order to properly evaluate the effects of structural flexibility on the control system, the analysis shall consider (but not be limited to) the following characteristics of the entry vehicle and its environment:

- Control System Design
  - Stability margins
  - Control system component dynamics
  - Sensor location
  - Local deformation at sensors and actuators

Control effector angles, rates, accelerations, and location
Thrust hardware dynamics
Digital autopilot effects
Limit cycle amplitudes
System nonlinearities
System tolerances and sensitivity
Control system changes
Component failures

- Structural Model
  Vibration mode shapes, frequencies, and damping
  Propellant dynamics
  Structural nonlinearities
  Tolerances of data
  Changes in vehicle center of mass
  Changes in vehicle mass and inertial properties
  Configuration changes
  Characteristics of thermal protection system
  Thermal effects on structural parameters

- Aerodynamics
  Variation with Mach number
  Vehicle geometry
  Variation with structural deformation
  High angle-of-attack-and sideslip angle effects
  Unsteady flow effects
  Plume and jet force interaction with flow field
  Shock wave interaction
  Flow separation
  Aerodynamic noise
  Buffet
  Uncertainties in aerodynamic data

3.2 Simulation Studies

Simulation studies shall be conducted to supplement the mathematical analysis and to evaluate nonlinear aspects of the interaction which are difficult to model analytically. To achieve the most realistic simulation of the actual system, as much flight hardware as feasible should be included. System failures shall also be investigated in these simulations. If the entry vehicle is to be manually controlled, pilot-in-the-loop simulation studies shall be included. These simulation studies should be used as a design tool and to demonstrate system performance, stability, and compliance with system requirements and specifications.

3.3 Tests

A test program shall be established which verifies the estimates and assumptions made during control system/structure interaction analysis and simulation and which verifies that the control

system meets performance and stability requirements throughout the entire flight envelope. The test program should be planned to insure that test data are obtained early enough in the development cycle to benefit design decisions. Ground tests (i.e., both normal operation and operation under system failures) shall include structural and control system component tests, vibration and acoustic tests of realistic structure, control system operation tests, and if possible, overall system tests of the combined structure and control system. The test plan should provide that the control system flight tests will be made concurrently with other system flight tests. If the vehicle is to be used for manned missions, flight test plans should insure compliance with applicable crew safety criteria.

4. RECOMMENDED PRACTICES

Since the design of flexible entry vehicle control systems entails a series of decisions involving such interacting disciplines as controls, guidance, computer, structures, aerodynamics, aeroelasticity and aerothermoelasticity, thermodynamics, propulsion, and test groups, close coordination should be established among these groups. Interchange of information and intelligent compromise on all parameters affecting interaction should take place during the vehicle development phase. All participating analytical, design, and test groups should be made aware of configuration and hardware changes so that the effects of the changes may be evaluated from the viewpoint of each group's particular area of responsibility.

As an effective means of insuring the proper interface of design groups, it is recommended that computerized data files be used for data storage, retrieval, and update to facilitate accurate communication.

4.1 Control System/Structure Interaction Analysis

4.1.1 Control System Design

The control system should be capable of stabilizing or controlling the flexible structure as well as the rigid-body modes of the entry vehicle. The basic choice of sensors, actuating equipment, computing equipment, compensation and signal conditioning is dependent on satisfying rigid-body stability and performance requirements; however, structural flexibility and propellant slosh effects should be added to the analysis as soon as practical and the performance of the control system re-evaluated. The design should be altered as necessary to provide stabilization and/or control of the flexible structure as well as the rigid vehicle modes. It is recommended that initially the control system be designed by assuming negligible coupling between the longitudinal and lateral-directional dynamics.

It is recommended that linear control theory, especially time-invariant stability analysis methods, be used for the initial control system analysis (ref. 151). Gain margins of 6 dB and phase margins of 40° are recommended values with which to begin the linearized design. Mode stabilization techniques (refs. 1, 43, and 44) should be considered for reducing structural load levels, increasing structural fatigue life, and improving flying and ride qualities.

Since the dynamic characteristics of entry vehicles change rapidly during the flight, the control system gain values chosen to satisfy low dynamic pressure requirements may be inadequate later in the flight. The simplest recommended procedure is to implement a preprogrammed change in control system gains and/or filters; that is, gain or filters are changed to a predetermined value as a function of an appropriate flight parameter such as time or dynamic pressure.

If conventional gain and phase stabilization techniques via simple filtering or attenuation are inadequate for controlling structural responses, the following techniques should be investigated:

(1) Use of notch filters to attenuate control system response at a critical structural vibration frequency. This technique has been applied successfully, but its use is limited because of the rapidly changing structural response characteristics.

(2) Use of multiple feedback sensors (ref. 152).

(3) Use of an adaptive control system (ref. 153).

(4) Alteration of sensor location.

Once a linear design is completed, the effects of nonlinear elements should be investigated (ref. 154). Hard nonlinearities such as saturation, dead zones, and backlash are of particular interest because they admit the possibility of limit cycle oscillations. Quantization and finite sampling effects of digital controllers may also exhibit this phenomenon. Describing function analysis is recommended to provide insight into nonlinear behavior and to produce specifications for hardware. The nonlinearities described by this technique should be simulated in detail after the design is well formulated. Phase plane analysis is recommended for second-order systems to provide insight into nonlinear behavior.

The application of statistical methods and optimal control theory to the design of vehicle control systems (refs. 155–158) should be investigated. Methods which afford a more direct measure of system performance relative to the operational requirements and/or constraints in Section 3.1 should be given special consideration. In particular, consideration should be given to the use of covariance analysis (ref. 159), in which variances of state variables of the system are determined as functions of time, to obtain a measure of the probability of exceeding structural limits during flight.

Optimal control methods should be considered for the design of systems which incorporate a large array of sensors and effectors. Since there are a great number of possible control paths in such a system, these methods are especially useful in providing a systematic way of determining the cause-effect relationship of the numerous parameters for use in synthesizing the control system. The application of optimization methods should be investigated for the design especially of load alleviation and mode stabilization control systems (ref. 43).

4.1.2 Structural Modeling

It is recommended that the entry vehicle be modeled so as to obtain accurate and complete vehicle vibration modes and frequencies. For some configurations (such as a body of revolution), the

vehicle can be idealized as a simple beam; for other configurations (such as winged entry vehicles), the vehicle has to be appropriately idealized as a structure in six degrees of freedom. Computation of modal vibration data by finite element computer programs such as NASTRAN (ref. 51) is recommended. The determination of modal vibration data is reviewed in references 3 and 5.

Since entry vehicle mass, aerodynamic characteristics, and temperature distributions change appreciably during flight, a "time slice" analysis should be employed, wherein at periodic intervals along the trajectory pertinent to control system analysis, a complete vibration modal analysis of the structure is performed. Vehicle parameter values, applicable at the midpoint of each such interval, should be used to calculate vibration modes and frequencies. Time slice intervals should be chosen short enough to reduce approximation errors to tolerable limits. Characteristics should be obtained for as many modes as are deemed necessary to characterize adequately the structural dynamics (refs. 3 and 17). Table 1 (Section 2.3.1.1) illustrates modal characteristics calculated for use in aircraft vibration mode control analyses.

Selection of modes for control system analysis (ref. 3) should be made on the basis of modal gain, which is a measure of the flexible body motion induced at a control sensor by the control force applied by the effector. Care should be taken to insure that modes contributing to modification of the vehicle aerodynamics are included. Convergence studies should be made to insure that no important modes have been omitted. Higher-frequency modes whose amplitudes do not produce significant modal gain may be ignored. However, if modal gain is low because the point under consideration is a node or antinode, slight variations in mode shape may produce significant gains. Both gain and mode shape should be considered before a particular mode is rejected. In addition, the effects of configuration changes on vibration mode characteristics should be determined. The effects of aerodynamic heating on the vibration characteristics should be ascertained, including the degradation of modulus of elasticity by heat soak, change in stiffness patterns caused by thermal gradients, and reduction in stiffness because of thermal transients. The structural characteristics of the TPS should be included in subsequent vibration modal analyses.

Tolerances should be introduced into the structural model to account for uncertainties in the vibration data. Based on experience, during the early design phase when structural data are not well known, the control system should be designed to accommodate frequency variations of ± 10 percent for the first mode and ± 20 percent on the second through the fourth or fifth modes for structures under standard temperature conditions. Tolerances for heated structures should be based on correlation with results of heat tests.

The accuracy with which structural dynamic parameters can be predicted is dependent on the model used. It is strongly recommended that, whenever possible, the mathematical model be verified by tests.

Since structural energy dissipation is a nonlinear function of amplitude and cannot be calculated, values for modal damping ratio may be based on past experience. Whenever possible, linearized modal damping estimates should be obtained from measurements made on the actual vehicle structure excited to expected flight amplitudes. For analysis, assume a value of 0.010 to 0.015 for the viscous damping ratio of all modes until test data is obtained.

4.1.3 Aerodynamics

It is recommended that the distribution of normal force coefficient be determined over the body through the expected angle-of-attack range. Quasi-steady aerodynamics should be used to obtain the force distributions whenever needed. Unsteady flow calculations should be made for all control surfaces. The methods summarized in Table 2 (Section 2.3.2.1) are especially useful in aeroelastic problems and are recommended for interaction analysis.

Theoretical analyses should be verified by wind tunnel studies when possible. Where discrepancies exist, both the theory and the tests should be re-evaluated as to accuracy. Wind tunnel studies are essential for determination of aerodynamics at high angles of attack and sideslip angles. Modified Newtonian theory (ref. 68) is recommended for blunt bodies for $M > 5.0$; calculations should be verified experimentally. The effects of flow field interactions with engines and reaction jets (ref. 100), shock wave patterns and interaction with the flow field, flow separation, aerodynamic noise and buffet on control effectors and sensors should be determined if wind tunnel data are available. Reference 8 and documents cited therein give details on effects of buffet and methods to minimize the buffet conditions. References 19 and 107 contain information on noise investigations of entry vehicles.

Where nonlinear effects for wing-body-tail combinations are significant, empirical methods such as those presented in references 109 and 110 are recommended. Data from reference 108 or data in similar forms should be used.

4.2 Simulation Studies

The analytical models developed for the aerodynamics, structure, and control system should be incorporated in a simulation study to determine control system/structure interactions. All elements of the control loop illustrated in figure 4 should be simulated to insure that all possible interaction effects are considered. The simulation should be initiated as early in the design of the vehicle as possible. Vehicle vibration modes should be included from the earliest stages of dynamic analysis. If liquid propellants are to be used, slosh modes in each propellant tank should be included in the simulation. Also, the dynamics of all effectors and associated actuation hardware should be included. Real-time simulation of the operation of the system, utilizing as much of the flight or flight-type hardware as practical, is recommended. If the vehicle is manned, the pilot should be incorporated in the simulation. It is also recommended that the simulation investigate, as a minimum, the following flight events:

(1) Engine ignition

(2) Engine shutdown

(3) Maneuvering, including bank angle and angle-of-attack transitions

(4) Deployment of drag devices

(5) Maximum dynamic pressure

(6) Maximum angle of attack and sideslip angle

(7) Maximum temperature

(8) Maximum temperature gradient in structure

(9) Control mode switching

During further refinement of the simulation, a mathematical model should be developed which is capable of accounting for all significant dynamic phenomena such as coupling between pitch, roll and yaw, unsteady aerodynamic effects on lifting surfaces, flexible internal structures and dynamic characteristics of sensors and actuators, and local flexibility effects. Provision should be made in the simulation for changes in parameter values so that off-nominal or malfunction conditions can be investigated (ref. 151). The effects of the highest-probability malfunctions should be investigated to determine if modifications can be made in the nominal design to improve off-nominal performance. The simulation should include all significant nonlinearities in both the control system and structure. Investigations of limit cycle performance should then be carried out to verify nonlinear analysis. In addition, the simulation should model the effects of digital components in the control loop. Frequency aliasing due to finite sample intervals and quantization may have important effects and should be investigated. Roundoff errors due to finite word length as well as computer speed requirements should be investigated. Either the computer itself or an accurate computer simulation should be included in the total system simulator so that control system software may be tested (ref. 18). Sensitivity studies should be performed to determine the effect of tolerances associated with the control system, the structure, and other related areas such as aerodynamics.

4.3 Tests

Tests to determine control system and structural hardware characteristics are recommended in the development of every vehicle (refs. 3, 5, 20–22, 160–163). It is recommended that the test program be initiated as soon as possible, following preliminary design of the control system. Test results should be correlated with analysis and appropriate modifications made when necessary.

Scale model tests (refs. 164–166) are recommended to aid in the development of full-scale tests, to assess the validity of analytical models, and to provide structural data if full-scale tests are not feasible. Static tests to determine load versus displacement characteristics can be conducted on scale models; however, this data should be used with caution since these models are not capable of predicting local effects accurately. Aerodynamic characteristics should be ascertained from wind tunnel tests, particularly for flight conditions which are not amenable to analysis. The experimental values should be compared to the analytical values to verify the analysis. The experimental distributions should be incorporated in the mathematical model if analytical values are not available or cannot be determined accurately.

Ground vibration tests can also be performed on scale models (ref. 166). The results should be correlated with extensive analysis and, whenever feasible, should be supplemented by full-scale testing. Wind tunnel tests should be conducted to determine aeroelastic properties of the vehicle (ref. 60). It should be ascertained that all aeroelastic models and flutter models have proper actuator stiffness.

Components should be tested as soon as they are available. Static tests for friction, hysteresis, leakage, and other contributors to saturation deadzones and backlash should be conducted (ref. 160). Force-deflection tests should be conducted on structural components if this information is required for mathematical model verification. Thermal tests are expensive and difficult to extrapolate to full-scale vehicles, component tests should be conducted when temperature effects are important.

Dynamic tests should be performed on control system gyros, sensors, and actuators and their structural mounts to determine their frequency response characteristics. These tests are often accomplished by use of test stands. Test stands should be developed early in the program using simulated effector mass and inertia, as well as mount elasticity, with capability provided to vary these parameters. The test stand should be used to evaluate prototype components as well as the above parameters. In addition, the resonant frequency of the effector including the control surface, actuator, and backup structure should be established. Dynamic test stands should also be used which may utilize specially built test specimens or functional mockups of portions of the vehicle. If possible, actual effector equipment should be utilized as should prototype electronic packages and feedback sensors. Frequency response tests are recommended to determine the control system characteristics including control surface rate, actuator force and hinge moment curves, and nonlinearities which could result in limit cycles.

Results of component tests (wind tunnel models, full-scale component tests, etc.) should be incorporated into simulation studies. This is particularly important when full-scale closed loop testing cannot be conducted.

Static tests should be conducted on full scale engineering models or prototype vehicles to verify major load versus displacement characteristics. These tests are especially recommended if nonlinearities are known to exist or if ground vibration tests of full-scale vehicles are not to be conducted. The tests should obtain, at a minimum, the elastic characteristics for the main load-carrying structure with loads applied at the location of primary masses or major attachment points. Local structure should be investigated carefully at control system component locations.

Dynamic tests are recommended on full-scale engineering models, prototype, and/or flight hardware to determine vibration modes, frequencies, and damping (ref. 5). Free-free vibration modes should be obtained whenever practical. In order that the free-free modes be properly obtained, the vehicle should be suspended or mounted so as to reproduce, as closely as possible, the true inflight boundary conditions. Local response as well as overall response should be monitored, especially at stations where important control instrumentation might be located (ref. 167).

Closed-loop tests during ground vibration tests with sensors operating and hydraulics either operative or inoperative are recommended to demonstrate the dynamic performance of the flight control system. These tests are particularly valuable for determining the effects of structural resonances on control system performance and for investigating local structural nonlinearity. Closed-loop testing with hydraulics activated should be conducted, however, precaution should be taken to avoid undesired responses which may occur in the absence of aerodynamic or thrust forces when these forces are normally required for stability. This type of closed-loop test should

be considered where structural resonance of a control surface is a suspected problem. In this case, gain and phase margins required to bring the ground test configuration to zero stability can be determined. These values should be used to establish flight values (ref. 23).

Data from flight tests should be used to verify predictions of structure and control system interaction. If special inflight inputs or maneuvers are performed to evaluate interactions, provision should be made for postlaunch evaluation of the vehicle and to allow inflight adjustments of the control system to negate any interaction effects. Flight-test data should be compared to ground-test results to verify ground-test procedures. Inflight tests should be conducted to verify predicted structural response. Winged entry vehicles should undergo flight flutter testing.

4.4 Specific Recommended Practices

Extensive flight experience with aircraft, launch vehicles (ref. 1), and spacecraft (ref. 2) and limited experience with entry vehicles have resulted in a number of specific practices and considerations developed to cope with the interaction problems reviewed in Section 2.3. Since entry vehicles may be vastly different in configuration and mission, the applicability of these practices to a specific situation must be properly evaluated.

4.4.1 Structural Feedback

4.4.1.1 Vehicle Deformation

Vibration Mode Characteristics

The following practices are recommended:

(1) Give particular attention to important modes for control system analysis on the basis of modal gain—the modal deflection at the control effector times the modal deformation at the sensor location divided by the generalized mass. Higher-frequency modes whose amplitudes do not produce significant modal gain may be neglected. However, if modal gain is low because the point under consideration is near a node or antinode, slight variations in mode shape may produce significant gains. Both gain and mode shape should be considered before a particular mode is rejected.

(2) Select vibration modes that reflect static as well as dynamic deformation patterns (ref. 165).

(3) Retain vibration modes that contribute to modification of the vehicle aerodynamics. Consider the coupling effects of steady and unsteady aerodynamics on the flexible and rigid-body modes by using distributed aerodynamic loads.

(4) Determine the effects of mission events, configuration changes and aerodynamic heating on vibration mode characteristics. Use complete vehicle modes in the interaction analysis. These may be either analytically or experimentally determined (ref. 60).

(5) If modal variations caused by center-of-mass variations associated with propellant expenditure become intolerable, use propellant transfer or sequencing as appropriate to control the center of mass.

Sensor Location

The following practices are recommended:

(1) Within design limitations such as thermal and geometric constraints, sensor location should be determined by consideration of the effects on control of the flexible vehicle.

(2) Insofar as possible, locate gyros near the nodes and accelerometers near the antinodes of all modes that are phase-stabilized by the control system; for modes that are gain-stabilized, reverse the procedure. Sufficient tolerance should be provided at these locations because of the sensitivity in predictions of small deflections and slopes. In practice, the actual placement of flight control instruments will be a compromise location, neither close to nodes nor antinodes, but rather the location giving the best stability margins from the consideration of all vibration modes and within practical physical limits of suitable space in the vehicle.

(3) Consider the use of multiple sensor installations to aid in stabilization and to diminish control system sensitivity to structural vibration (ref. 152). Optimal control theory should be considered in determining sensor locations (ref. 158).

Propellant Slosh

The following practices are recommended:

(1) Include propellant slosh dynamics in the control system model as separate degrees of freedom.

(2) Use methods such as those presented in references 6 and 54 for considering propellant slosh dynamics.

(3) Consideration should be given to the use of baffles to correct slosh stability problems for both normal and off-loaded propellant requirements (ref. 7).

Static Instability

The following practices are recommended:

(1) Determine the static stability in the longitudinal and lateral-directional planes. If control system gains are increased to effect better stability margins, evaluate the effect of increased bandwidth on structural flexibility interactions.

(2) If directional instability occurs, evaluate the effects of wing dihedral, which can reduce lateral-directional instabilities. If the instability occurs at high angle of attack and aerodynamic directional controls are ineffective, consider the use of reaction jets for control.

(3) If unstable vehicle constraints are encountered, consider the use of fail-operational mechanizations to cope with the possibility of equipment failures.

4.4.1.2 Local Deformation

Resonance Effects

The following practices are recommended:

(1) Design the control system so that the flexibility of vehicle components does not cause structural feedback problems. The stiffness, inertial damping, and location of the components should be considered (refs. 165 and 166).

(2) If the effects of a flexible vehicle component on the overall dynamics appear to be important, add the component dynamics as separate degrees of freedom and conduct a tolerance analysis on the component effects.

(3) Allow for structural cross-coupling in the control system design. Both stiffness and inertia asymmetry should be assessed (refs. 165 and 166).

Servoelasticity

The following practices are recommended:

(1) Include slop in linkages, joints, and junctions in the control system design. Verify values by tests on full-scale vehicle.

(2) Determine the coupling of structural flexibility with actuator dynamics. Use local models of actuator backup structure.

(3) In the selection of hydraulic actuators, choose maximum velocity and maximum force capabilities with respect to control system performance requirements. Do not arbitrarily put large margins of safety on these limits, because the hydraulic system saturation characteristics provide a limit on the amount of moment applied to the vehicle during high-frequency oscillation.

Sensor Mounting

The following practices are recommended:

(1) When possible, the natural frequency of the sensor mounting structure should be at least twice that of the sensor bandpass.

(2) Include sensor mounting structure in the mathematical model; slopes should be predicted for the actual sensor locations (refs. 165 and 166).

(3) If possible, locate sensors away from massive or dynamically active components that can cause local deformation. Consideration should also be given to the effects of local deformation due to noise, panel flutter, and buffet.

(4) Design sensor mounts to insure that the desired quantity is measured.

(5) Because local deformation frequently is a problem, consider mounting pitch and yaw gyros separately on their respective structural neutral axes.

(6) Consider the requirements for mounting redundant sensors so that they are physically separated but mounted to sense identical structural deformation.

Effector Inertia

The following practices are recommended:

(1) Include effector inertia effects in the control system design (ref. 59).

(2) Consider the possibility of effector and actuator dynamics coupling with the flexible structure (ref. 1).

(3) If possible, keep the gimballed engine resonant frequency above the tail-wags-dog frequency (ref. 1).

4.4.2 Aeroelasticity and Thermal Effects

4.4.2.1 Static Aeroelastic Problems

Thermal Expansion

The following practices are recommended:

(1) Consider changes in structural shape caused by heating and aeroelastic phenomena.

(2) Consider thermal expansion in the design of control surface joints, hinges and linkages.

Effects on Trim

For design analyses, comply with the requirements of reference 114. The flexibility of the structure, including the effects of aerodynamic heating, should be included in determination of the trim conditions.

Control Surface Effectiveness

Determine the control surface effectiveness and reversal speeds including aerothermoelastic effects to comply with requirements given in references 11 and 120. Nonlinearities should be considered and treated as discussed in 4.1.1.

Stability Derivatives

Use aerodynamic and structural influence coefficients (refs. 66, 118, and 119) to calculate stability derivatives including aerothermoelastic effects. The calculated derivatives should be compared to wind tunnel values for advanced control system design verification whenever possible.

4.4.2.2 Dynamic Aeroelastic Problems

Classical Flutter

The following practices are recommended:

(1) Determine the effects of aeroelastic analyses (refs. 12, 60, and 120) on the control surface design through coordination with the aeroelasticians. Notify the aeroelastician of proposed control system changes, particularly those involving control surfaces and actuation equipment.

(2) If an extremely reliable automatic control system is to be implemented, consider the application of flutter suppression techniques (refs. 123–125); include aeroelastic roots in the control system stability analysis.

Stall Flutter

The following practices are recommended:

(1) Preliminary studies can be based on test data from reference 127 for cantilevered wings at subsonic, transonic, and low supersonic speeds.

(2) An experimental approach to investigate stall flutter is recommended. This can include wind tunnel studies, shock tunnel tests, and high-speed sled tests.

(3) Determine the stall flutter frequency; keep control system gain down at this frequency.

Panel Flutter

Perform analyses to insure that panel flutter does not occur in the design speed envelope. Reference 13 discusses recommended practices.

Control Surface Buzz

The following practices are recommended:

(1) Analyze buzz at both transonic and hypersonic speeds.

(2) Provide sufficient actuator stiffness to preclude buzz.

(3) Apply alleviation methods given in references 12 and 131.

4.4.3 Other Interaction Effects

Transient Response Problems

The following practices are recommended:

(1) For proper consideration of the dynamic excitation introduced by thrust transients see reference 14.

(2) Avoid cyclic firing of RCS jets at structural vibration frequencies insofar as possible; consider the possibility of RCS vibration saturating sensors. Since closed-loop gain is relatively low for RCS, filter sensors as required.

(3) Investigate the effects of switchover lags, actuator rate limits, coincidence of switchover circuit, and vibration mode frequencies and other switchover phenomena on the dynamics of the controlled vehicle for switchover to redundant control systems or in blended control systems.

(4) Determine the effects of staging or separation dynamics on the control system (ref. 15).

Pogo

If the space vehicle has significant longitudinal-lateral cross coupling, consider the possibility of a control system interaction with pogo. Pogo can be investigated by methods noted in reference 16. Consider the use of filters to remove pogo oscillation inputs from sensor signals.

Winds

The following practices are recommended:

(1) Include the effects of inflight winds (gusts and wind shears) in the control system design, using methods similar to those given in references 11 and 133.

(2) Consider the use of mode stabilization control systems such as in reference 46 to improve vehicle performance in turbulence.

Flying and Ride Qualities

The following practices are recommended:

(1) Evaluate the flying quality aspects (refs. 140 and 143) of the control system in simulations with pilot in the loop.

(2) Apply ride quality criteria presented in reference 144.

(3) Consider the use of mode stabilization control systems (ref. 46) to improve flying and ride qualities.

Pilot Inputs

The following practices are recommended:

(1) If a manual control mode is to be used, include the pilot in the simulation of the control system with flexible-body dynamics. Evaluate the effects of control maneuvers commanded by the pilot (ref. 11).

(2) Consider the possibility of pilot-induced oscillations, particularly for marginally stable or lightly damped control modes between 1 and 2.5 Hz.

Digital Autopilot Considerations

The following practices are recommended:

(1) In general, consider the effects of input and output quantization increments on vibration mode response (ref. 145).

(2) Consider the effect of frequency aliasing (sampling rate problem) on vibration mode stability.

(3) Filter rate gyro and accelerometer signals before sampling to eliminate potential problem of noise folding down into structural mode regime.

Spin Effects

The following practices are recommended:

(1) Use analysis methods as given in references 147–149 to evaluate spin resonance effects. Recommended practices are given in reference 2.

(2) Determine the effects of energy dissipation, such as caused by propellant slosh, on the dynamics of entry vehicles spin-stabilized about the axis of minimum moment of inertia.

REFERENCES

1. Anon.: Effects of Structural Flexibility on Launch Vehicle Control Systems. NASA Space Vehicle Design Criteria (Guidance and Control), NASA SP-8036, Feb. 1970.

2. Anon.: Effects of Structural Flexibility on Spacecraft Control Systems. NASA Space Vehicle Design Criteria (Guidance and Control), NASA SP-8016, Apr. 1969.

3. Anon.: Structural Interaction with Control Systems. NASA Space Vehicle Design Criteria (Structures), NASA SP-8079, Oct. 1971.

4. Anon.: Entry Vehicle Control. NASA Space Vehicle Design Criteria (Guidance and Control), NASA SP-8028, Nov. 1969.

5. Anon.: Natural Vibration Modal Analysis. NASA Space Vehicle Design Criteria (Structures), NASA SP-8012, Sep. 1968.

6. Anon.: Propellant Slosh Loads. NASA Space Vehicle Design Criteria (Structures), NASA SP-8009, Aug. 1968.

7. Anon.: Slosh Suppression. NASA Space Vehicle Design Criteria (Structures), NASA SP-8031, May 1969.

8. Anon.: Buffeting During Atmospheric Ascent. NASA Space Vehicle Design Criteria (Structures), NASA SP-8001, May 1964, Revised Nov. 1970.

9. Anon.: Entry Gasdynamic Heating. NASA Space Vehicle Design Criteria (Structures), NASA SP-8062, Jan. 1971.

10. Anon.: Entry Thermal Protection. NASA Space Vehicle Design Criteria (Structures), NASA SP-8014, Aug. 1968.

11. Anon.: Structural Design Criteria Applicable to a Space Shuttle. NASA Space Vehicle Design Criteria (Structures), NASA SP-8057, Jan. 1971.

12. Anon.: Flutter, Buzz, and Divergence. NASA Space Vehicle Design Criteria (Structures), NASA SP-8003, July 1964.

13. Anon.: Panel Flutter. NASA Space Vehicle Design Criteria (Structures), NASA SP-8004, May 1965.

14. Anon.: Transient Loads From Thrust Excitation. NASA Space Vehicle Design Criteria (Structures), NASA SP-8030, Feb. 1969.

15. Anon.: Staging Loads. NASA Space Vehicle Design Criteria (Structures), NASA SP-8022, Feb. 1969.

16. Anon.: Prevention of Coupled Structure-Propulsion Instability (Pogo). NASA Space Vehicle Design Criteria (Structures), NASA SP-8055, Oct. 1970.

17. Anon.: Structural Vibration Prediction. NASA Space Vehicle Design Criteria (Structures), NASA SP-8050, June 1970.

18. Anon.: Spaceborne Digital Computer Systems. NASA Space Vehicle Design Criteria (Guidance and Control), NASA SP-8070, Mar. 1971.

19. Anon.: Acoustic Loads Generated by the Propulsion System. NASA Space Vehicle Design Criteria (Structures), NASA SP-8072, June 1971.

20. Anon.: Design Development Testing. NASA Space Vehicle Design Criteria (Structures), NASA SP-8043, May 1970.

21. Anon.: Acceptance Testing. NASA Space Vehicle Design Criteria (Structures). NASA SP-8045, Apr. 1970.

22. Anon.: Qualification Testing. NASA Space Vehicle Design Criteria (Structures). NASA SP-8044, May 1970.

23. Kotfila, R. P.; and Painter, W. D.: Design, Development, and Flight-Test Experience with Lifting Body Stability Augmentation Systems. AIAA Paper No. 69-887, AIAA Guidance, Control and Flight Mechanics Conference, Princeton, N. J., Aug. 18–20, 1969.

24. Painter, W. D.; and Kock, B. M.: Operational Experiences and Characteristics of the M2-F2 Lifting Body Flight Control System. NASA TM X-1809, 1969.

25. Pyle, J. S.; and Ash, L. G.: Performance Characteristics of the Lifting Body Vehicle. In Flight Test Results Pertaining to the Space Shuttlecraft. NASA TM X-2101, Oct. 1970, pp. 43–58.

26. Layton, G. P., Jr.; and Thompson, M. O.: Lifting Body Flight-Test Techniques. Presented at AGARD Flight Mechanics Panel, Toulouse, France, May 10–14, 1971.

27. Dana, W. H.; and Gentry, J. R.: Pilot Impressions of Lifting Body Vehicles. In Flight Test Results Pertaining to the Space Shuttlecraft. NASA TM X-2101, Oct. 1970, pp. 73–88.

28. Meltzer, J.; et al: Structure and Materials Aspects of the PRIME Flight Test Vehicle. Proceedings of AIAA/ASME Seventh Structures and Materials Conference, Cocoa Beach, Fla., Apr. 18–20, 1966, pp. 398–421.

29. Bartlett, H. E.; Dean, J. W.; and Owen, A. H.: ASSET (14 Volumes). Air Force Technical Report AFFDL-TR-65-31, Apr. 1966.

30. Holleman, E. C.; and Adkins, E. J.: Contributions of the X-15 Program to Lifting Entry Technology. J. of Aircraft, vol. 1, no. 6, Nov.–Dec. 1964, pp. 360–366.

31. Holleman, E. C.: Summary of High-Altitude and Entry Flight Control Experience with the X-15 Airplane. NASA TN D-3386, Apr. 1966.

32. Taylor, L. W., Jr., and Merrick, G. B.: X-15 Airplane Stability Augmentation System. NASA TN D-1157, Mar. 1962.

33. Kordes, E. E.: Experience with the X-15 Airplane in Relation to the Problems of Reentry Vehicles. Presented at 3rd Congress of the International Council of the Aeronautical Sciences, Stockholm, Sweden, Aug.–Sept. 1962.

34. Anon.: Experience with the X-15 Adaptive Flight Control System. NASA TN D-6208, Mar. 1971.

35. Thompson, M. O.; and Welsh, J .R.: Flight Test Experience with Adaptive Control Systems. Advanced System Concepts. AGARD Conference Proceedings No. 58, Jan. 1970, pp. 141–147.

36. Taylor, L. W., Jr.; and Smith, J. W.: An Analysis of the Limit-Cycle and Structural Resonance Characteristics of the X-15 Stability Augmentation System. NASA TN D-4287, 1967.

37. Jarvis, C. R.; and Lock, W. P.: Operational Experience with the X-15 Reaction Control and Reaction Augmentation Systems. NASA TN D-2864, June 1965.

38. Kordes, E. E.: Secondary Structures and Mechanisms—Design Trouble Area for the Space Shuttle. Presented at Space Transportation System Technology Symposium, NASA TM X-52876, vol. III: Structures and Materials, July 15–17, 1970, pp. 93–99.

39. McWithey, R. R.; and Vosteen, L. F.: Effects of Transient Heating on the Vibration Frequencies of a Prototype of the X-15 Wing. NASA TN D-362, May 1960.

40. Yancey, R. B.: Flight Measurements of Stability and Control Derivatives of the X-15 Research Airplane to a Mach Number of 6.02 and an Angle of Attack of 25°. NASA TN D-2532, Nov. 1964.

41. Jordan, G. H.; McLeod, N. J.; and Guy, L. D.: Structural Dynamic Experiences of the X-15 Airplane. NASA TN D-1158, Mar. 1962.

42. Taylor, L. W., Jr.: Analysis of a Pilot-Airplane Lateral Instability Experienced With the X-15 Airplane. NASA TN D-1059, Nov. 1961.

43. Burris, P. M. and Bender, M. A.: Aircraft Load Alleviation and Mode Stabilization (LAMS). Air Force Technical Report AFFDL-TR-68-158, Apr. 1969.

44. Wykes, J. H.; Nardi, L. U.; and Mori, A. S.: XB-70 Structural Mode Control System Design and Performance Analyses. NASA CR-1557, July 1970.

45. Wykes, J. H.; and Kordes, E. E.: Analytical Design and Flight Tests of a Modal Suppression System on the XB-70 Airplane. Aeroelastic Effects from a Flight Mechanic's Standpoint. AGARD Conference Proceedings No. 46, 1969.

46. Johannes, R. P.: Performance Advantages Offered by Advanced Flight Control Technology. AIAA/CASI Conference, Toronto, Canada, Aug. 1970.

47. Pasley, L. H.; and Kass, G. J.: Improved Airplane Performance Through Advanced Flight Control System Design. AIAA/CASI Conference, Toronto, Canada, Aug. 1970.

48. Skelton, G. B.: Active Flexure Control Today. Space Transportation System Technology Symposium, vol. VI. Integrated Electronics (Including Electric Power). NASA TM X-52876, Vol. VI, July 15–17, 1970.

49. Kuchta, B. J.; and Sealey, D. M.: A Preliminary Investigation of Potential Value—Loads Alleviation Control for Space Shuttle Vehicles. General Dynamics Report No. GDC-DDE71-001, Contract NAS9-11191, June 30, 1971.

50. Waymeyer, W. K.; and Sporing, R. W.: An Industry Survey on Aeroelastic Control System Instabilities in Aerospace Vehicles. IAS Paper No. 62-47, Presented at the IAS 30th Annual Meeting (New York), Jan. 22–24, 1962.

51. McCormick, C. W.: The NASTRAN User's Manual. NASA SP-222, 1970.

52. Dublin, M.: An Approach to Control of Statically Unstable Manned Flight Vehicles. AGARD Report No. 364, Apr. 1961.

53. Wykes, J. H.; and Mori, A. S.: XB-70 Aerodynamic, Geometric, Mass, and Symmetric Structural Mode Data. NASA CR-116773, Mar. 1970.

54. Fontenot, L. L.: Dynamic Stability of Space Vehicles. Vol. VII: The Dynamics of Liquids in Fixed and Moving Containers. NASA CR-941, Mar. 1968.

55. Runyan, H. L.; and Goetz, R. C.: Space Shuttle—A New Arena for the Structural Dynamicist. Presented at the Dynamic Response of Structures Symposium, Stanford, Calif., June 28–29, 1971.

56. Abramson, H. N.; Dodge, F. T.; and Kana, D. D.: Propellant Dynamics Problems in Space Shuttle Vehicles. Space Transportation System Technology Symposium, vol. II: Dynamics and Aeroelasticity. NASA TM X-52876, Vol. II, July 15–17, 1970.

57. Weil, J.: Application of Analytical Techniques to Flight Evaluations in Critical Control Areas. AGARD Report 369, Apr. 1961.

58. Powell, R. W.; Adams, J. J.; and Brown, L. W.: Control and Handling Qualities of Space Shuttle Orbiters. NASA Space Shuttle Technology Conference, vol. I: Aerothermodynamics, Configurations, and Flight Mechanics. NASA TM X-2272, Vol. I, Mar. 2–4, 1971.

59. Kotfila, R. P.; and Osder, S. S.: Stabilization and Control of Maneuvering Reentry Vehicles. Sperry Engineering Review, Vol. 18, No. 3, Fall 1965, pp. 2–10.

60. Bisplinghoff, R. L.; Ashley, H.; and Halfman, R. L.: Aeroelasticity. Addison-Wesley Publishing Company, Inc., Reading, Mass., 1955.

61. Bisplinghoff, R. L.; and Ashley, H.: Principles of Aeroelasticity. John Wiley and Sons, Inc., New York, 1962.

62. Runyan, H. L.; Pratt, K. G.; and Bennett, F. V.: Effects of Aeroelasticity on the Stability and Control Characteristics of Airplanes. AGARD Report No. 348, Apr. 1961.

63. Perkins, C. D.: Development of Airplane Stability and Control Technology. J. of Aircraft, vol. 7, no. 4, July–Aug. 1970, pp. 290–301.

64. Garrick, I. E.; and Cunningham, H. J.: Problems and Developments in Aerothermoelasticity. Proceedings of Symposium on Aerothermoelasticity. ASD Technical Report 61-645, Feb. 1962, pp. 12–60.

65. Laidlaw, W. R.; and Wykes, J. H.: Potential Aerothermoelastic Problems Associated with Advanced Vehicle Design. Proceedings of Symposium on Aerothermoelasticity, ASD Technical Report 61-645, Feb. 1962, pp. 120–160.

66. Wykes, J. H.; and Lawrence, R. E.: Aerothermoelasticity: Its Impact on Stability and Control of Winged Aerospace Vehicles. J. of Aircraft, vol. 2, no. 6, Nov.–Dec. 1965, pp. 517–526.

67. Hamel, P.: A System Analysis View of Aerodynamic Coupling. J. of Aircraft, vol. 7, no. 6. Nov.-Dec. 1970, pp. 567-569.

68. Kaufman, L. G., II.: Pressure Estimation Techniques for Hypersonic Flows over Blunt Bodies. J. of Aeronautical Sciences, vol. 10, no. 2, Summer 1963.

69. Bergh, H.; and Zwaan, R. J.: Present Status of Unsteady Aerodynamics for Lifting Surfaces. Aeroelastic effects from a Flight Mechanic's Standpoint. AGARD Conference Proceedings No. 46, Mar. 1970.

70. Yates, E. C., Jr.: Flutter and Unsteady-Lift Theory. Performance and Dynamics of Aerospace Vehicles. NASA SP-258, 1971.

71. Mykytow, W. J.;and Olsen, J. J.: The Relevance of Recent Advances in Unsteady Aerodynamics to the Space Shuttle Program. Space Transportation System Technology Symposium, vol. II: Dynamics and Aeroelasticity. NASA TM X-52876, vol. II, July 15–17, 1970.

72. Ashley, H.: Some Considerations Relative to the Prediction of Unsteady Air Loads on Lifting Configurations. J. of Aircraft, vol. 8, no. 10, Oct. 1971, pp. 741–756.

73. Yates, E. C., Jr.: Calculation of Flutter Characteristics for Finite-Span Swept or Unswept Wings at Subsonic and Supersonic Speeds by a Modified Strip Analysis. NACA RM L57L10, 1958.

74. Liepman, H. W.; and Roshko, A.: Elements of Gasdynamics. John Wiley and Sons, Inc., New York, 1957.

75. Shapiro, A. H.: The Dynamics and Thermodynamics of Compressible Flow, vol. I. Ronald Press Co., New York, 1953.

76. Woodward, F. A.: Analysis and Design of Wing-Body Combinations at Subsonic and Supersonic Speeds. J. of Aircraft, vol. 5, no. 6, Nov.-Dec. 1968, pp. 528–534.

77. Newman, P. A.; and Allison, D. O.: An Annotated Bibliography on Transonic Flow Theory. NASA TM X-2363, Sep. 1971.

78. Ferrari, C.; and Tricomi, F. G.: Transonic Aerodynamics. Academic Press, New York, 1969.

79. Labrujere, T. E.; Loeve, W.; and Slooff, J. W.: An Approximate Method for the Calculation of the Pressure Distribution on Wing-Body Combinations at Subcritical Speeds. AGARD Conference Proceedings No. 71 (Preprint), Specialists Meeting of the Fluid Dynamics Panel of AGARD, Silver Springs, Md., Sep. 28–30, 1970.

80. Murman, E. M.; and Cole, J.: Calculation of Plane Steady Transonic Flows. Presented at the AIAA 8th Aerospace Sciences Meeting, New York, Jan. 1970.

81. Magnus, R.; and Yoshihara, H.: Inviscid Transonic Flow Over Airfoils. Presented at AIAA 8th. Aerospace Sciences Meeting (New York), January 1970.

82. Steger, J.; and Lomax, H.: Numerical Calculation of Transonic Flow About Two-Dimensional Airfoils by Relaxation Procedures. AIAA Preprint No. 71-569, 1971.

83. Van Dyke, M. D.: A Study of Second-Order Supersonic Flow Theory. NACA Rept. 1081, 1952.

84. Rakich, J. V.: A Method of Characteristics for Steady Three-Dimensional Supersonic Flow with Application to Inclined Bodies of Revolution. NASA TN D-5341, Oct. 1969.

85. Ashley, H.; and Zartarian, G.: Piston Theory—A New Aerodynamic Tool for the Aeroelastician. J. of Aeronautical Sciences, vol. 23, No. 12, Dec. 1956, pp. 1109–1118.

86. Hayes, W. D.; and Probstein, R. F.: Hypersonic Flow Theory. Academic Press, New York, 1959.

87. Van Dyke, M. D.: A Study of Hypersonic Small-Disturbance Theory. NACA Rept. 1194, 1954.

88. Smilg, B.; and Wasserman, L. S.: Application of Three-Dimensional Flutter Theory to Aircraft Structures. Air Force Technical Report 4798, 1942.

89. Li, T. C.: Unsteady Aerodynamics for Advanced Configurations. Part V—Unsteady Potential Flow Around Slender Bodies at Angle of Attack. Report FDL-TDR-64-152, May 1965.

90. Watkins, C. E.; Woolston, D. S.; and Cunningham, H. J.: A Systematic Kernel Function Procedure for Determining Aerodynamic Forces on Oscillating or Steady Finite Wings at Subsonic Speeds. NASA TR R-48, 1959.

91. Albano, E.; and Rodden, W. P.: A Doublet-Lattice Method for Calculating Lift Distributions on Oscillating Surfaces in Subsonic Flows. AIAA Journal, vol. 7, no. 2, Feb. 1969, pp. 279–285.

92. Rodden, W. P.; Giesing, J. P.; and Kalman, T. P.: Refinement of the Nonplanar Aspects of the Subsonic Doublet-Lattice Lifting Surface Method. J. of Aircraft, vol. 9, no. 1, Jan. 1972, pp. 69–73.

93. Garrick, I. E.: On Some Reciprocal Relations in the Theory of Unstationary Flows NACA Rept. 629, 1938.

94. Nelson, H. C.; and Berman, J. H.: Calculation on the Forces and Moments for an Oscillating Wing-Aileron Combination in Two-Dimensional Potential Flow at Sonic Speed. NACA Rept. 1128, 1953.

95. Zartarian, G.; Hsu, P. T.; and Ashley, H.: Dynamic Airloads and Aeroelastic Problems at Entry Mach Numbers. J. of Aeronautical Sciences, vol. 28, no. 3, Mar. 1961, pp 209–222.

96. Watkins, C. E.; and Berman, J. H.: On the Kernel Function of the Integral Equation Relating Lift and Downwash Distributions of Oscillating Wings in Supersonic Flow. NACA Rept. 1257, 1956.

97. Pines, S.; Dugundji, J.; and Neuringer, J.: Aerodynamic Flutter Derivatives for a Flexible Wing with Supersonic and Subsonic Edges. J. Aeronautical Sciences, vol. 22, no. 10, Oct. 1955, pp. 693–700.

98. Morito, J., II: A Refined Prediction Method for the Unsteady Aerodynamics of Supersonic Elastic Aircraft. J. of Aircraft, vol. 9, no. 1, Jan. 1972, pp. 61–68.

99. Zartarian, G.; and Sauerwein, H.: Further Studies on High-Speed Unsteady Flow. ASD-TDR-62-463, Final Report, Sept. 1962.

100. Vick, A. R.; Cubbage, J. M.; and Andrews, E. H., Jr.: Rocket Exhaust Plume Problems and Some Recent Related Research. Presented at a Specialist's Meeting on the Fluid Dynamic Aspects of Space Flight, Marseilles, France, AGARD, Apr. 20–24, 1964.

101. Boger, R. C.; Rosenbaum, H.; and Reeves, B. L.: Flowfield Interactions Induced by Underexpanded Exhaust Plumes.AIAA 4th Fluid and Plasma Dynamics Conference, Palo Alto, June 1971.

102. Spreeman, K. P.: Induced Interference Effects on Jet and Buried Fan VTOL Configuration in Transition. NASA TN D-731, Mar. 1961.

103. Vogler, R.: Interference Effects on Single and Multiple Round or Slotted Jets on a VTOL Model in Transition. NASA TN D-2380, Aug. 1964.

104. Ericsson, L. E.; Reding, J. P.; and Guenther, R. A.: Analytic Difficulties in Predicting Dynamic Effects of Separated Flow. AIAA Paper No. 70–762, AIAA 3rd Fluid and Plasma Dynamics Conference, Los Angeles, Calif., June 29–July 1, 1970.

105. Wilson, R. E.; and Maurer, F.: Turbulent Boundary-Layer Separation at Low Supersonic Mach Numbers. AIAA Journal, vol. 9, no. 1, p. 190, 1971.

106. Coe, C. F.: Buffet and Aerodynamic Noise. Space Transportation System Technology Symposium, Vol. II: Dynamics and Aeroelasticity. NASA TM X-52876, vol. II, July 15–17, 1970, pp. 239–248.

107. Lowson, M. V.: Prediction of Boundary Layer Pressure Fluctuations. Air Force Technical Report AFFDL-TR-67-167, Apr. 1968.

108. Pitts, W. C.; Nielsen, J. N.; and Kaatari, G. F.: Lift and Center of Pressure of Wing-Body-Tail Combinations at Subsonic, Transonic, and Supersonic Speeds. NACA Rept. 1307, 1959.

109. Ortell, A. R.: Supersonic and Hypersonic Lift of Highly Swept Wings and Wing-Body Combinations. J. of Aircraft, vol. 4, no. 1, Jan.–Feb. 1967, pp. 78-79.

110. Anon.: USAF Stability and Control Handbook (DATCOM). Sep. 1970.

111. Switzky, H.; Forray, M. J.; and Newman, M.: Thermo-Structural Analysis Manual. Air Force Technical Report No. WADD-TR-60-517, vol. I, Aug. 1962.

112. Schadt, G. H.: Lifting Entry Vehicle Aerodynamic Heating and Thermal Protection Systems. Presented at University of Tennessee Space Institute, Tullahoma, Tenn., August 18–22, 1969.

113. Andrews, W. H.: Summary of Preliminary Data Derived from the XB-70 Airplanes. NASA TM X-1240, 1966.

114. Anon.: Military Specification, Airplane Strength and Rigidity, General Specification for. MIL-A-8860A (USAF), Mar. 31, 1971.

115. Etkin, B.: Dynamics of Flight. John Wiley and Sons, Inc., New York, 1959.

116. Wolowicz, C. H.: Considerations in the Determination of Stability and Control Derivatives and Dynamic Characteristics from Flight Data. AGARD Report 549, Part I, 1966.

117. Cole, H. A., Jr.; Brown, S. C.; and Holleman, E. C.: Experimental and Predicted Longitudinal and Lateral-Directional Response Characteristics of a Large Flexible 35° Swept-Wing Airplane at an Altitude of 35,000 Feet. NACA Report 1330, 1957.

118. Abel, I.: Evaluation of Techniques for Predicting Static Aeroelastic Effects on Flexible Aircraft. J. of Aircraft, vol. 9, no. 1, Jan. 1972, pp. 43–47.

119. Roskam, J.; and Dusto, A.: A Method for Predicting Longitudinal Stability Derivatives of Rigid and Elastic Airplanes. J. of Aircraft, vol. 6, no. 6, Nov.-Dec. 1969, pp. 525–531.

120. Anon.: Military Specification, Airplane Strength and Rigidity, Flutter, Divergence, and other Aeroelastic Instabilities. MIL-A-8870A (USAF), Mar. 31, 1971.

121. Runyan, H. L.; and Jones, N. H.: Effect of Aerodynamic Heating on the Flutter of a Rectangular Wing at a Mach Number of 2. NASA TN D-460, June 1960.

122. Groen, J. M.; and Rosecrans, R.: Effect of Aerodynamic Heating on the Flutter of Thin Flat—Plate Arrow Wings. NASA TN D-1788, May 1963.

123. Johannes, R. P.: Active Flutter Control—Flight Test System Synthesis. Paper No. 7-B1, 1971 Joint Automatic Control Conference, St. Louis, Mo., Aug. 11–13, 1971.

124. Topp, L. J.: Potential Performance Gains by Use of a Flutter Suppression System. Paper No. 7-B3, 1971 Joint Automatic Control Conference, St. Louis, Mo., Aug. 11–13, 1971.

125. Nissim, E.: Use of Active Control Surfaces for Flutter Suppression. NASA TN D-6199, Mar. 1970.

126. Goetz, R. C.: Lifting and Control Surface Flutter. Space Transportation System Technology Symposium, vol. II: Dynamics and Aeroelasticity. NASA TM X-52876, Vol. II, July 15-17, 1970, pp. 177–198.

127. Rainey, A. G.: Preliminary Study of Some Factors which Affect the Stall-Flutter Characteristics of Thin Wings. NACA TN-3622, 1956.

128. Goetz, R. C.: Effects of Space Shuttle Configuration on Wing Buffet and Flutter: Part I—Launch Vehicle Wing with Tip Fin. Paper 7-1, NASA Space Shuttle Technology Conference, vol. III: Dynamics and Aeroelasticity. NASA TM-X-2274, 1971.

129. Kordes, E. E.; and Noll, R. B.: Flight Flutter Results for Flat Rectangular Panels. NASA TN D-1058, Feb. 1962.

130. Dixon, S. C.; Griffith, G. E.; and Bohon, H. L.: Experimental Investigation at Mach Number 3.0 of the Effects of Thermal Stress and Buckling on the Flutter of Four-Bay Aluminum Alloy Panels with Length-Width Ratios of 10. NASA TN D-921, Aug. 1961.

131. Lambourne, N. C.: Control-Surface Buzz. A.R.C. R&M. No. 3364, May 1962.

132. Goetz, R. C.; and Gibson, F. W.: Investigation of Control-Surface Instabilities on Lifting-Body Reentry Vehicles at a Mach Number of 15.4. NASA TN D-6301, Aug. 1971.

133. Weidner, D. K.: Space Environment Criteria Guidelines for Use in Space Vehicle Development. NASA TM X-53957, (1969 Revision), Oct. 17, 1969.

134. Pratt, K. G.: Response of Flexible Airplanes to Atmospheric Turbulence. Performance and Dynamics of Aerospace Vehicles, NASA SP-258, 1971.

135. Crooks; et al: Project HICAT, An Investigation of High Altitude Clear Air Turbulence. AFFDL-TR-67-123, vols. I–III, Nov. 1967.

136. Crooks; et al: Project HICAT, High Altitude Clear Air Turbulence Measurements and Meteorological Correlations. AFFDL-TR-68-127, vols. I and II, Nov. 1968.

137. Kordes, E. E.; and Love, B. J.: Preliminary Evaluation of XB-70 Airplane Encounters with High-Altitude Turbulence. NASA TN D-4209, Oct. 1967.

138. Rohling, W. J.: Flying Qualities: An Integral Part of a Stability Augmentation System. J. of Aircraft, vol. 6, no. 6, Nov.–Dec. 1969, pp. 510–515.

139. DiFranco, D. A.; and Mitchell, J. F.: Preliminary Investigation of Handling Qualities Requirements for Lifting Entry Vehicles. AFFDL-TR-69-32, May 1969.

140. Anon.: Flying Qualities of Piloted Airplanes. Military Specification MIL-F-8785B (ASG), Aug. 7, 1969.

141. Chalk, C. R.; et al.: Background Information and User Guide for MIL-F-8785B (ASG), Military Specification—Flying Qualities of Piloted Airplanes. Tech. Rept. AFFDL-TR-69-72, Air Force Flight Dynamics Laboratory, Wright-Patterson Air Force Base, Aug. 1969.

142. Holleman, E. C.: Rationale for Proposed Flying-Qualities Specifications. Flight Test Results Pertaining to the Space Shuttlecraft. NASA TM X-2101, Oct. 1970.

143. Anon.: Space Shuttle Orbiter Flying Qualities Specification. NASA Manned Spacecraft Center, MSC-05156, Internal Note MSC-EG-71-31, Oct. 22, 1971.

144. Rustenburg, J. W.: Development of Tracking Error Frequency Response Functions and Aircraft Ride Quality Design Criteria for Vertical and Lateral Vibration. ASD-TR-70-18, Jan. 1971.

145. Brabeck, P. G.; et al.: Digital Autopilot Design and Computer Sizing Study. NASA CR-86246, Sep. 1969.

146. Widnall, W. S.; et al.: The Digital Simulation for the Verification of Program Sunburst (Unmanned LM, AS-206). MIT Instrumentation Laboratory E-2146, July 1967.

147. Young, C. P., Jr.: On the Steady Aeroelastic Behavior of a Spinning Rocket Vehicle Having Aerodynamic Symmetry. AIAA Paper No. 70-1397, AIAA 2nd Sounding Rocket Technology Conference, Williamsburg, Va., Dec. 7–9, 1970.

148. Baines, D. J.; and Pearson, K. G.: Aeroelasticity as a Consideration in Aerodynamic Design of Rolling, Unguided Research Rockets. J. Spacecraft and Rockets, vol. 4, no. 12, Dec. 1967, pp. 1603-1608.

149. Zheludev, P. I.: Bending Flutter of Rotating Elongated Bodies. Mekhanika Tverdogo Tela, USSR, no. 2, 1966, pp. 160-165. English trans., Faraday Press.

150. Merchant, D. H.; and Gates, R. M.: Prediction of Apollo Service Module Motion After Jettison. AIAA Paper No. 70-1047, AAS/AIAA Astrodynamics Conference, Santa Barbara, Calif., Aug. 19–21, 1970.

151. Greensite, A.: Elements of Modern Control Theory. Spartan Book Co., New York, 1970.

152. Westerwick, R. A.: Multiple Sensors Feasibility Study, vols. I and II. Rept. ASD-TDR-63-378, Air Force Systems Command Flight Control Laboratory, June 1963.

153. Anon.: Advanced Flight Vehicle Self-Adaptive Flight Control System. WADD-TD-60-651, vols. 1–7, 1960.

154. Gelb, A.; and Vander Velde, W. E.: Multiple-Input Describing Functions and Nonlinear System Design. McGraw-Hill Book Co., Inc., 1968.

155. Bryson, A. E.; and Ho, Y. C.: Applied Optimal Control. Blaisdell Co., Waltham, Mass., 1969.

156. Vaughan, D. R.; and Blackburn, T. R.: Continuation of the Study of Bending Feedback Control System, vol. I: Final Report. Douglas Aircraft Company, DAC-62178, Contract No. NAS 8-18126, Feb. 1968.

157. Hauser, F. D.: Computerized Optimization of Flexible Booster Autopilots. Proceedings of AIAA Guidance, Control, and Flight Mechanics Conference, Princeton University, Aug. 1969.

158. Stapleford, R. L.; et al.: A Practical Optimization Design Procedure for Stability Augmentation Systems. AFFDL-TR-70-11, 1970.

159. Harvey, C. A.: Application of Optimal Control Theory to Launch Vehicles, Final Technical Report, 12073-FR1, Honeywell, Inc., July 1968.

160. Lukens, D. R.: Dynamic Stability of Space Vehicles, Vol. IV: Full Scale Testing For Flight Control Parameters. NASA CR-938, Nov. 1967.

161. Lukens, D. R.; et al.: Dynamic Stability of Space Vehicles, Vol. VI: Full Scale Dynamic Testing for Mode Determination. NASA CR-940, Dec. 1967.

162. Anon.: Military Specification, Flight Control Systems—Design, Installation and Test of, Piloted Aircraft, General Specification for. MIL-F-9490C (USAF), Mar. 13, 1964.

163. Anon.: ASFC Design Handbook, DH 3-2 Space Vehicles. Air Force Systems Command, Sep. 20, 1969.

164. Wissman, J. W.: Dynamic Stability of Space Vehicles—Structural Dynamics Model Testing. NASA CR-1195, Sep. 1968.

165. Grimes, P. J.; McTigue, L. D.; Riley, G. F.; and Tilden, D. I.: Advancements in Structural Dynamic Technology Resulting from Saturn Programs, vol. I. NASA CR-1539, June 1970.

166. Grimes, P. J.; McTigue, L. D.; Riley, G. F.; and Tilden, D. I.: Advancements in Structural Dynamic Technology Resulting from Saturn Programs, vol. II. NASA CR-1540, June 1970.

167. Lukens, D. R.: Dynamic Stability of Space Vehicles, vol. V: Impedance Testing for Flight Control Parameters. NASA CR-939, Dec. 1967.

NASA SPACE VEHICLE DESIGN CRITERIA MONOGRAPHS ISSUED TO DATE

SP-8001 (Structures)	Buffeting During Atmospheric Ascent, revised November 1970
SP-8002 (Structures)	Flight-Loads Measurements During Launch and Exit, December 1964
SP-8003 (Structures)	Flutter, Buzz, and Divergence, July 1964
SP-8004 (Structures)	Panel Flutter, July 1964
SP-8005 (Environment)	Solar Electromagnetic Radiation, revised May 1971
SP-8006 (Structures)	Local Steady Aerodynamic Loads During Launch and Exit, May 1965
SP-8007 (Structures)	Buckling of Thin-Walled Circular Cylinders, revised August 1968
SP-8008 (Structures)	Prelaunch Ground Wind Loads, November 1965
SP-8009 (Structures)	Propellant Slosh Loads, August 1968
SP-8010 (Environment)	Models of Mars Atmosphere (1967), May 1968
SP-8011 (Environment)	Models of Venus Atmosphere (1968), December 1968
SP-8012 (Structures)	Natural Vibration Modal Analysis, September 1968
SP-8013 (Environment)	Meteoroid Environment Model—1969 (Near Earth to Lunar Surface), March 1969
SP-8014 (Structures)	Entry Thermal Protection, August 1968
SP-8015 (Guidance and Control)	Guidance and Navigation for Entry Vehicles, November 1968
SP-8016 (Guidance and Control)	Effects of Structural Flexibility on Spacecraft Control Systems, April 1969
SP-8017 (Environment)	Magnetic Fields—Earth and Extraterrestrial, March 1969
SP-8018 (Guidance and Control)	Spacecraft Magnetic Torques, March 1969
SP-8019 (Structures)	Buckling of Thin-Walled Truncated Cones, September 1968
SP-8020 (Environment)	Mars Surface Models (1968), May 1969
SP-8021 (Environment)	Models of Earth's Atmosphere (120 to 1000 km), May 1969
SP-8022 (Structures)	Staging Loads, February 1969
SP-8023 (Environment)	Lunar Surface Models, May 1969
SP-8024 (Guidance and Control)	Spacecraft Gravitational Torques, May 1969
SP-8025 (Chemical Propulsion)	Solid Rocket Motor Metal Cases, April 1970
SP-8026 (Guidance and Control)	Spacecraft Star Trackers, July 1970

SP-8027 (Guidance and Control)	Spacecraft Radiation Torques, October 1969
SP-8028 (Guidance and Control)	Entry Vehicle Control, November 1969
SP-8029 (Structures)	Aerodynamic and Rocket-Exhaust Heating During Launch and Ascent, May 1969
SP-8030 (Structures)	Transient Loads From Thrust Excitation, February 1969
SP-8031 (Structures)	Slosh Suppression, May 1969
SP-8032 (Structures)	Buckling of Thin-Walled Doubly Curved Shells, August 1969
SP-8033 (Guidance and Control)	Spacecraft Earth Horizon Sensors, December 1969
SP-8034 (Guidance and Control)	Spacecraft Mass Expulsion Torques, December 1969
SP-8035 (Structures)	Wind Loads During Ascent, June 1970
SP-8036 (Guidance and Control)	Effects of Structural Flexibility on Launch Vehicle Control Systems, February 1970
SP-8037 (Environment)	Assessment and Control of Spacecraft Magnetic Fields, September 1970
SP-8038 (Environment)	Meteoroid Environment Model—1970 (Interplanetary and Planetary), October 1970
SP-8039 (Chemical Propulsion)	Solid Rocket Motor Performance Analysis and Prediction, May 1971
SP-8040 (Structures)	Fracture Control of Metallic Pressure Vessels, May 1970
SP-8041 (Chemical Propulsion)	Captive-Fired Testing of Solid Rocket Motors, March 1971
SP-8042 (Structures)	Meteoroid Damage Assessment, May 1970
SP-8043 (Structures)	Design-Development Testing, May 1970
SP-8044 (Structures)	Qualification Testing, May 1970
SP-8045 (Structures)	Acceptance Testing, April 1970
SP-8046 (Structures)	Landing Impact Attenuation For Non-Surface-Planing Landers, April 1970
SP-8047 (Guidance and Control)	Spacecraft Sun Sensors, June 1970
SP-8048 (Chemical Propulsion)	Liquid Rocket Engine Turbopump Bearings, March 1971
SP-8049 (Environment)	The Earth's Ionosphere, March 1971
SP-8050 (Structures)	Structural Vibration Prediction, June 1970
SP-8051 (Chemical Propulsion)	Solid Rocket Motor Igniters, March 1971

SP-8052 (Chemical Propulsion)	Liquid Rocket Engine Turbopump Inducers, May 1971
SP-8053 (Structures)	Nuclear and Space Radiation Effects on Materials, June 1970
SP-8054 (Structures)	Space Radiation Protection, June 1970
SP-8055 (Structures)	Prevention of Coupled Structure-Propulsion Instability (Pogo), October 1970
SP-8056 (Structures)	Flight Separation Mechanisms, October 1970
SP-8057 (Structures)	Structural Design Criteria Applicable to a Space Shuttle, January 1971
SP-8058 (Guidance and Control)	Spacecraft Aerodynamic Torques, January 1971
SP-8059 (Guidance and Control)	Spacecraft Attitude Control During Thrusting Maneuvers, February 1971
SP-8060 (Structures)	Compartment Venting, November 1970
SP-8061 (Structures)	Interaction With Umbilicals and Launch Stand, August 1970
SP-8062 (Structures)	Entry Gasdynamic Heating, January 1971
SP-8063 (Structures)	Lubrication, Friction, and Wear, June 1971
SP-8064 (Chemical Propulsion)	Solid Propellant Selection and Characterization, June 1971
SP-8065 (Guidance and Control)	Tubular Spacecraft Booms (Extendible, Reel Stored), February 1971
SP-8066 (Structures)	Deployable Aerodynamic Deceleration Systems, June 1971
SP-8067 (Environment)	Earth Albedo and Emitted Radiation, July 1971
SP-8068 (Structures)	Buckling Strength of Structural Plates, June 1971
SP-8069 (Environment)	The Planet Jupiter (1970), December 1971
SP-8070 (Guidance and Control)	Spaceborne Digital Computer Systems, March 1971
SP-8071 (Guidance and Control)	Passive Gravity-Gradient Libration Dampers, February 1971
SP-8072 (Structures)	Acoustic Loads Generated by the Propulsion System, June 1971
SP-8074 (Guidance and Control)	Spacecraft Solar Cell Arrays, May 1971
SP-8077 (Structures)	Transportation and Handling Loads, September 1971
SP-8078 (Guidance and Control)	Spaceborne Electronic Imaging Systems, June 1971
SP-8079 (Structures)	Structural Interaction With Control Systems, November 1971
SP-8082 (Structures)	Stress-Corrosion Cracking in Metals, August 1971

SP-8084 (Environment)	Surface Atmospheric Extremes (Launch and Transportation Areas), May 1972
SP-8085 (Environment)	The Planet Mercury (1971), March 1972
SP-8086 (Guidance and Control)	Space Vehicle Displays Design Criteria, March 1972
SP-8095 (Structures)	Preliminary Criteria for the Fracture Control of Space Shuttle Structures, June 1971
SP-8092 (Environment)	Assessment and Control of Spacecraft Electromagnetic Interference, June 1972

NASA-Langley, 1972 —— 21