CONTRACT NAS8-27692
DR NO: MA-05

SD 72-SA-0054-1
JUNE 23, 1972

IN-SPACE PROPELLANT
LOGISTICS AND SAFETY

N72-30797

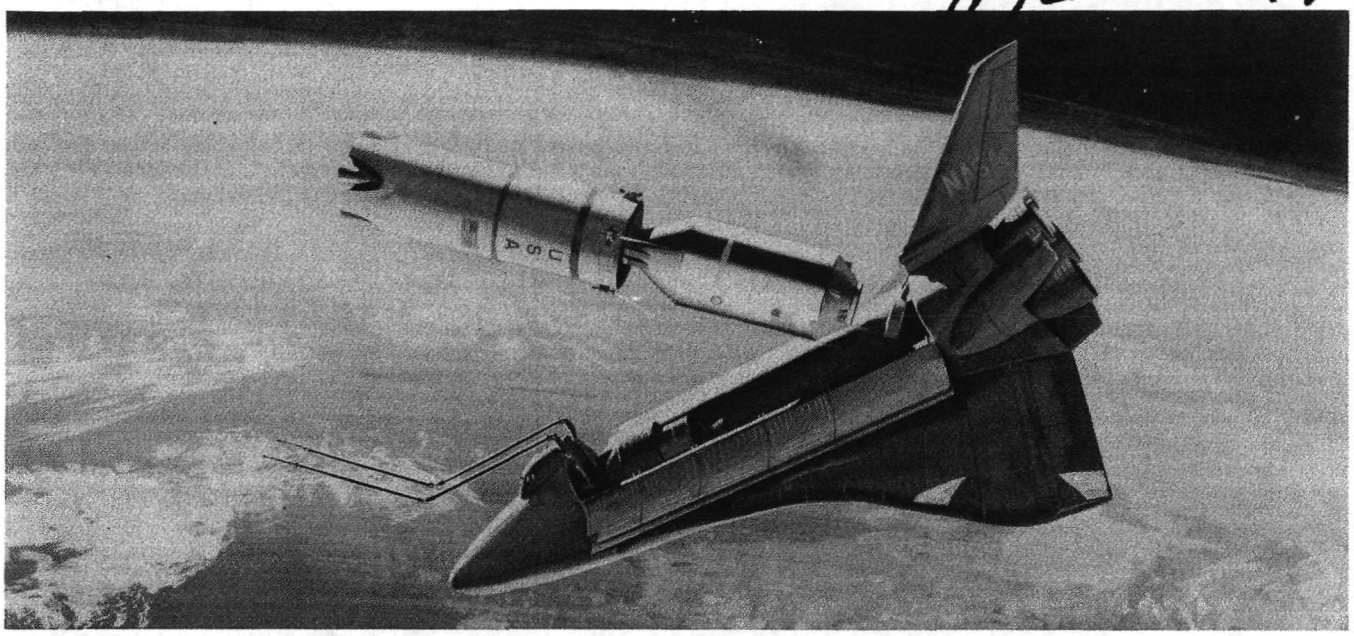

# IN-SPACE PROPELLANT SYSTEMS SAFETY

## Volume I
## EXECUTIVE SUMMARY

CASE FILE
COPY

Space Division
North American Rockwell

12214 Lakewood Boulevard, Downey, California 90241

CONTRACT NAS8-27692
DR NO: MA-05

SD 72-SA-0054-1
JUNE 23, 1972

IN-SPACE PROPELLANT
LOGISTICS AND SAFETY

# IN-SPACE PROPELLANT SYSTEMS SAFETY

## Volume I
## EXECUTIVE SUMMARY

R.E. Sexton, PROGRAM MANAGER

Space Division
North American Rockwell

12214 Lakewood Boulevard, Downey, California 90241

# FOREWORD

This In-Space Propellant Logistics and Safety Study was performed by the Space Division of North American Rockwell Corporation for the National Aeronautics and Space Administration, Marshall Space Flight Center, under Contract NAS8-27692. The study was a twelve-month effort initiated on June 25, 1971, and completed on June 23, 1972.

The study was conducted as two separate, but related projects. One project addressed the systems and operational problems associated with the transport, transfer, and storage of cryogenic propellants in low earth orbits, while the other project addressed the safety problems connected with in-space propellant logistics operations. Correlation between the two projects was maintained by including safety considerations resulting from the System Safety Analysis in the trade studies and evaluations of alternate operating concepts in the Systems/Operations Analysis.

Walter E. Whitacre of Marshall Space Flight Center, Advanced Systems Analysis Office, was the Contracting Officer's representative and provided technical direction to the overall contract and to the Systems/Operations Analysis project; Walter Stafford of the same office provided technical direction to the System Safety Analysis project. The contractor effort was under the direction of Robert E. Sexton, Program Manager; the Systems/Operations Analysis effort was led by Robert L. Moore and the System Safety Analysis effort was led by William E. Plaisted.

This document is Volume I of the following three volumes which contains the results of the System Safety Analysis:

| | | |
|---|---|---|
| Volume I | Executive Summary | (SD72-SA-0054-1) |
| Volume II | System Safety Guidelines and Requirements | (SD72-SA-0054-2) |
| Volume III | System Safety Analysis | (SD72-SA-0054-3) |

The results of the Systems/Operations Analysis portion of the study are contained in the following five volumes:

| | | |
|---|---|---|
| Volume I | Executive Summary | (SD72-SA-0053-1) |
| Volume II | Technical Report | (SD72-SA-0053-2) |
| Volume III | Trade Studies | (SD72-SA-0053-3) |
| Volume IV | Project Planning Data | (SD72-SA-0053-4) |
| Volume V | Cost Estimates | (SD72-SA-0053-5) |

CONTENTS

| Section | | Page |
|---|---|---|
| 1.0 | INTRODUCTION | 1 |
| | 1.1 STUDY OBJECTIVES | 2 |
| | 1.2 SCOPE | 2 |
| | 1.3 RELATIONSHIP TO OTHER STUDIES | 3 |
| | 1.4 METHOD OF APPROACH | 4 |
| 2.0 | BASE DATA GENERATED AND SIGNIFICANT RESULTS | 7 |
| | 2.1 DEPLOYMENT | 7 |
| | Conclusions | 7 |
| | Recommendation | 9 |
| | 2.2 DOCKING | 9 |
| | Conclusions | 9 |
| | Recommendations | 9 |
| | 2.3 TRANSFER | 10 |
| | Conclusions | 10 |
| | Recommendations | 11 |
| | 2.4 RETRIEVAL | 11 |
| | Conclusion | 11 |
| | Recommendations | 12 |
| | 2.5 ABORT | 13 |
| | 2.6 SLUSH HYDROGEN | 14 |
| | 2.7 RESIDUAL HAZARDS | 14 |
| | 2.8 TRADE STUDIES | 15 |
| | Safety Evaluation of Four Tug Propellant Transfer Concepts | 15 |
| | Safety Evaluation of Four CIS/RNS Propellant Transfer Concepts | 17 |
| | Safety Evaluation of a Modular CIS/RNS Concept | 17 |
| | Safety Evaluation of Orbiter-to-Orbiter Propellant Transfer Concepts | 19 |
| | 2.9 CONCLUSIONS | 19 |
| 3.0 | SUGGESTED ADDITIONAL EFFORT | 21 |

## ILLUSTRATIONS


| Figure | | Page |
|---|---|---|
| 1 | Study Approach | 1 |
| 2 | Propellant Logistics Elements | 2 |
| 3 | Relationship to Other Studies | 3 |
| 4 | Baseline Concept | 5 |
| 5 | Deployment and Docking Concept | 10 |
| 6 | Tug Emplaced in Shuttle Cargo Bay | 12 |
| 7 | Abort Regimes | 13 |
| 8 | Transfer Options for Typical Tug Concepts | 16 |
| 9 | Transfer Options for Typical CIS/RNS Concepts | 17 |
| 10 | Typical Modular Transfer Concept | 17 |
| 11 | Orbiter-to-Orbiter Transfer Concept | 19 |


## TABLES


| Table | | Page |
|---|---|---|
| 1 | In-Space Propellant Logistics Safety Critical Operations | 8 |
| 2 | Propellant Logistics Operations Hazards | 8 |
| 3 | Evaluation for Tug Propellant Logistics Elements | 16 |
| 4 | Evaluation for CIS/RNS Propellant Logistics Elements | 18 |
| 5 | Evaluation for Modular Concept, Propellant Logistics Elements | 18 |

# 1.0 INTRODUCTION

The NASA space program plan (1975-1995) has many elements including space-based vehicles for transporting payloads from low earth orbit to geosynchronous, lunar, and planetary orbits. These space-based vehicles would require large quantities of propellants (primarily liquid oxygen and liquid hydrogen) and an in-space propellant logistics element to provide earth-to-earth orbit transport, earth orbital storage, and in-space transfer of these propellants. Many of the routine operations required of the propellant logistics system are undeveloped and are potentially hazardous. A vital step in the successful execution of the space program plan is the conduct of a system safety analysis of the propellant logistics operations. This has been accomplished using the study approach of Figure 1.

This Executive Summary presents the significant results of the safety issues identified from the hazard analysis of the propellant logistics concepts and operations.

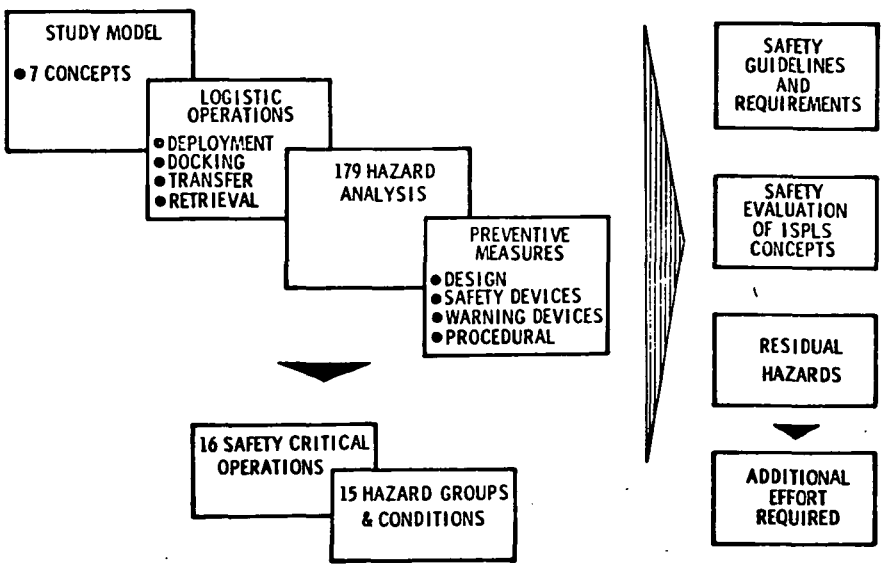


Figure 1. Study Approach

## 1.1 STUDY OBJECTIVES

The three main objectives of the study are the following:

1. Examine from a system safety viewpoint the in-space propellant logistics elements and operations to define the potential hazards and recommend means to eliminate, reduce, or control them.

2. Conduct trade studies of specific propellant logistics systems or operations to determine the safest of alternate approaches.

3. Develop safety guidelines and requirements which would be applicable to future in-space propellant logistics operations.

## 1.2 SCOPE

The study scope covered the propellant logistics elements shown in Figure 2.

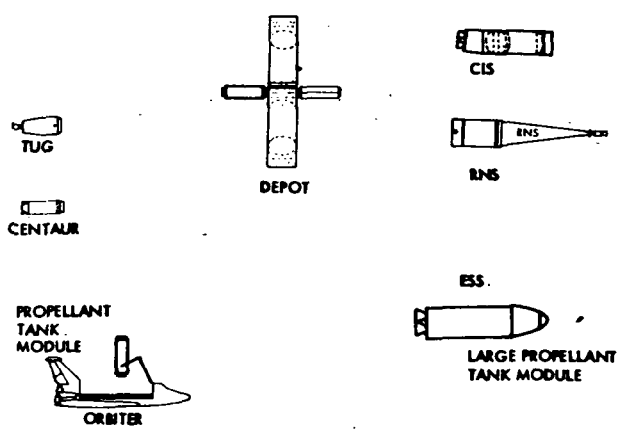


Figure 2. Propellant Logistics Elements

Initial system safety analysis tasks were based on the depot, the large storage facility (LSF) concept developed on the Orbital Propellant Storage System Feasibility Study (Change Order 1980, NAS7-200) completed in March 1971.

New propellant logistics concepts developed for the In-Space Propellant Logistics Study (refer to SD 72-SA-0053-1 through 5) were also included in the system safety analysis. These concepts involved the delivery of propellants by shuttle or expendable second stage (ESS) direct to the tug, chemical interorbital shuttle (CIS), and reusable nuclear shuttle (RNS), which eliminated the need for a large storage facility.

Additional concepts added per NASA request were propellant delivery by shuttle to a modular user vehicle and propellant delivery by shuttle to another shuttle in orbit.

Ground rules for the study were as follows:

- Hydrogen and oxygen were propellants considered.
- Only unique ground operations were considered.
- Study emphasis was concentrated on earth orbital propellant logistics operations.

## 1.3 RELATIONSHIP TO OTHER STUDIES

The In-Space Propellant System Safety Study was performed in the context of a wide range of related studies. This relationship is shown in Figure 3.

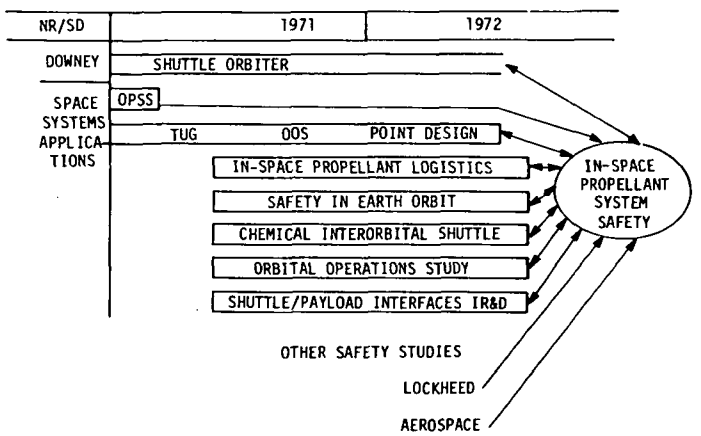


Figure 3. Relationship to Other Studies

The key studies were the concurrent effort of the In-Space Propellant Logistics Study and the Orbital Propellant Storage System Study completed in March 1971, which provided concepts and operations for the In-Space Propellant System Safety Analysis.

System and interface operation and functional flow data from the Phase B shuttle study were of particular significance. The shuttle concept was initially based on the integral tank orbiter and was later changed to the drop tank version. The results of this study are applicable to both concepts.

Phase A studies on the tug, orbit-to-orbit shuttle (OOS), and point design tug provided information for the safety evaluation of propellant transfer and shuttle cargo bay operations involving small user vehicles.

Other concurrent studies which provided a basis for a good interchange of information were safety in earth orbit, chemical interorbital shuttle, and orbital operations. In all the concurrent studies the interchange of information and ideas flowed in both directions.

Safety information was obtained from the Lockheed (shuttle) and the Aerospace Corporation (orbiting propellant depot) studies. The latter study was of particular significance for the safety evaluation of propellant storage concepts.

## 1.4 METHOD OF APPROACH

The study approach illustrated in Figure 1 shows the development and flow of data throughout the study.

A space program model was established for the system safety analysis of in-space propellant logistics operations. It was the intent to establish a model which involved all conceivably credible propellant logistic operations for the space program elements shown in Figure 2. The model included the following propellant logistics concepts:

1. Baseline (Figure 4) - Delivery of a propellant module in the shuttle cargo bay to an orbital propellant depot (OPD), which is a large earth orbital storage facility (LSF). Fluid transfer of propellants utilizes rotational acceleration for propellant settling.

2. Delivery of a propellant module in the shuttle cargo bay to one orbital altitude and transfer of the propellant module to the large storage facility at a higher altitude using the space-based tug

3. Delivery of a large quantity of propellants directly to the CIS/RNS using the shuttle booster with expendable second stage (ESS) as the transport mode

4. Delivery of a propellant module in the shuttle cargo bay and fluid transfer of propellants directly to a space-based tug

5. Delivery of a propellant module in the shuttle cargo bay and fluid transfer of propellant directly to a CIS/RNS

6. Delivery of a propellant module in the shuttle cargo bay and modular transfer of propellants directly to a modular user

7. Delivery of propellants in the shuttle cargo bay and modular or fluid transfer of propellant directly to another shuttle in orbit

The logistics operations involved with these concepts were evaluated by using functional flow diagrams and the safety-critical operations were identified. Catastrophic or critical propellant-related hazards associated with these operations were analyzed and preventive measures and safety guidelines and requirements were developed. Those hazards which could not be reduced by preventive measures below the level of critical were classified as residual hazards. These residual hazards were identified as areas for additional study effort.

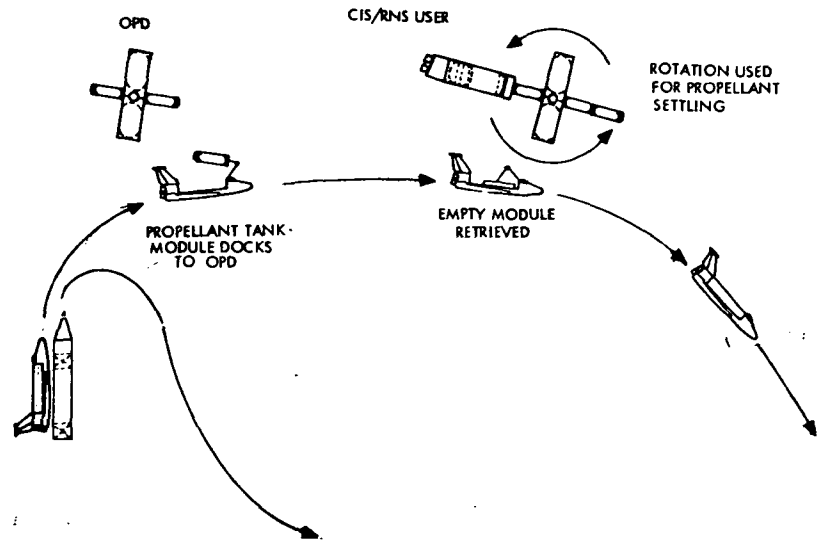


Figure 4. Baseline Concept

# 2.0 BASE DATA GENERATED AND SIGNIFICANT RESULTS

The 7 concepts of the study model were analyzed and 16 safety-critical operations were identified (Table 1). A total of 179 hazard analyses were performed and 15 propellant logistics hazards for deployment, docking, transfer, and retrieval operations were determined (Table 2); 384 preventive measures and 63 guidelines/requirements were developed to eliminate, reduce, or control these hazards. The scope of effort for the system safety analysis and the significant results, recommendations, and conclusions for the deployment, docking, transfer, and retrieval operations are presented in Sections 2.1 through 2.4. The results of the special safety issues for abort and use of slush hydrogen are presented in Sections 2.5 and 2.6, respectively.

Those hazards which cannot be reduced below the level of catastrophic or critical remain as residual hazards and are discussed in Section 2.7. Safety evaluation trade study results of propellant logistics concepts are presented in Section 2.8.

## 2.1 DEPLOYMENT

In propellant logistics operations, the orbiter will have a requirement for deploying a propellant tank module or tug from the cargo bay. The two deployment mechanisms considered for these operations were manipulators and rotational deployment mechanisms.

Potential hazards for the study model deployment operations were identified and hazard analyses were performed.

CONCLUSIONS

- The movement (sloshing) of the fluids (up to 60,000 lb) in the tanks during deployment of propellant logistics elements from the cargo bay with manipulators is a hazardous condition which can lead to impact of an element with the orbiter.

- The long manipulator arms with the propellant tank module attached are more susceptible to disturbances of sloshing or propulsive leakage (100- to 200-lb thrust) than the rotational deployment mechanism plus the module because of the weaker structural attachment to the orbiter and the greater deflection potential.

Table 1. In-Space Propellant Logistics Safety Critical Operations

| Concept \ Operations | Deployment | Docking | Transfer | Retrieval |
|---|---|---|---|---|
| 1 Baseline | Propellant tank module deployed by manipulators from cargo bay (1) | Shuttle soft docks propellant tank module to LSF (2)<br>Remote hard dock CIS to LSF (3) | Rotational acceleration of LSF for propellant settling - CIS/RNS - orbiter unattached (4) | Propellant tank retrieval--emplacement in cargo bay & deorbit of orbiter (5) |
| 2 Orbiter/tug/LSF | | Remote hard dock tug/module to LSF (6) | | |
| 3 Booster/ESS/large propellant tank | | Remote hard dock of large propellant tank with CIS/RNS (7) | | |
| 4 Orbiter to orbiter | | | Flex lines used by attaching at QD with use of manipulators (8)<br>Positive displacement method used for propellant transfer (9) | |
| 5 Orbiter to tug | Propellant tank module deployed by rotational deployment mechanism (10) | | Rotational or linear acceleration for propellant (11) settling with orbiter attached (12) | |
| 6 Orbiter to CIS/RNS | | Orbiter hard docks propellant tank module to CIS/RNS (13) | Linear acceleration for CIS/RNS/tank module propellant settling with orbiter not attached (14)<br>Capillary fluid control for CIS/RNS/tank module propellant transfer (15) | |
| 7 Orbiter to modular CIS | Propellant tank module deployed by rotational and manipulator mechanisms (16) | | | |

Table 2. Propellant Logistics Operations Hazards

| Hazard | Deployment | Docking | Transfer | Retrieval |
|---|---|---|---|---|
| 1. Sloshing | ● | ● | ● | ● |
| 2. Loss of vehicle control | ● | ● | ● | ● |
| 3. Impact | ● | ● | ● | ● |
| 4. Dynamic coupling | ● | ● | ● | ● |
| 5. Failure of line interconnect fixtures | ● | | ● | ● |
| 6. Loss of c.g. control | | ● | ● | |
| 7. Thermal shock | ● | | ● | ● |
| 8. Contamination | ● | ● | ● | ● |
| 9. Fire/explosion | ● | ● | ● | ● |
| 10. Uncontrolled venting | ● | ● | ● | ● |
| 11. Loss of liquid/vapor interface control | | | ● | |
| 12. Leakage/mass spill | ● | ● | ● | ● |
| 13. Loss of communications | | | ● | |
| 14. Loss of pressurization control | | | ● | ● |
| 15. Degradation of manned element | | | ● | ● |

- During removal of the propellant tank module from the cargo bay with manipulators, movement of the fluids ($LH_2$, $LO_2$) because of erratic operation of the manipulators or the RCS would result in sloshing and would increase the potential for the impact hazard.

- The manipulator control operator's ability to respond to fluid disturbances is a constraint on the safety of the deployment operation.

- Jettisoning a malfunctioning manipulator which has many failure configurations presents more risk to the orbiter than the ejection of a faulty rotational deployment mechanism.

RECOMMENDATION

- The rotational mechanism is recommended for deployment of the propellant logistics element from the cargo bay.

## 2.2 DOCKING

The safety aspects of docking operations between propellant logistic elements of varying sizes and with quantities of propellant from 50,000 lb to 1,000,000 lb were evaluated to determine the preferred approaches from a safety point of view. The options of soft docking with manipulators and direct hard docking were considered.

Potential hazards for the study model docking operations were identified and hazard analyses were performed.

CONCLUSIONS

- Docking maneuvers are approximately impulsive and propellant excitation due to docking impulses cannot be avoided and a small period of erratic motion can be expected.

- The direct hard docking system has the greatest potential for inadvertent collision because of the proximity of the docking vehicles. The manipulator docking system has the minimum potential for inadvertent collision between vehicles because of the relatively large separation distance at initial capture, but has more failure modes which can result in inadvertent contact and damage.

RECOMMENDATIONS

- Direct hard dock of propellant logistics elements is not a recommended propellant logistics operation because the vehicle contact impulse could produce excessive fluid oscillations.

- Damping constraints shall be designed into the propellant logistics system, which will prevent excessive fluid oscillations.

- Soft docking of propellant logistics elements is a recommended propellant logistics operation because the vehicle contact impulse at controlled velocities of 0.1 ft/sec or less will not produce excessive fluid oscillations. A combination of manipulator and probe operation will meet the soft docking requirements.

- A combination of both manipulators and a rotational deployment mechanism is the recommended safety concept for propellant logistics deployment and docking operations (Figure 5).

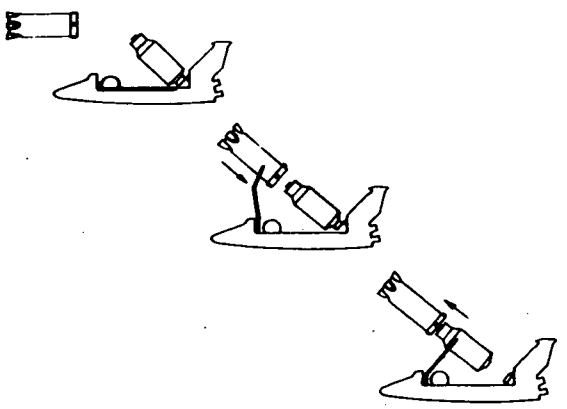

Figure 5. Deployment and Docking Concept

## 2.3 TRANSFER

The safety aspects of propellant transfer operations were evaluated for concepts involving rotational acceleration or linear acceleration for propellant settling. The transfer options with the orbiter attached and not attached were considered.

Potential hazards for the study model transfer operations were identified and hazard analyses were performed.

CONCLUSIONS

- Slosh problems during rotational acceleration are due to tumbling type instability (change in axis of rotation), rolling, spinning or coning motion, or propellant motions induced by spinup and spindown.

- Slosh problems during linear acceleration are due to excessive pitch and yaw attitude or attitude rate changes and rolling, spinning, coning, or translational motions.

- Problems due to propellant sloshing are:

  1. Premature uncovering of the source tank outlet
  2. Inability to assure liquid-free venting
  3. Use of excessive RCS propellants
  4. Inability to control within the desired band
  5. Structural failure

- Slosh wave amplitude decreases with the increase in the g field.

- High transfer rates will aggravate the slosh problem.

RECOMMENDATIONS

- Rotating the vehicle for propellant setting should not be done with configurations whose spin axis changes from major to minor or vice versa during propellant transfer. Ideally, the spin axis should be the major axis at all times.

- Source tank sloshing excited by receiver tank sloshing shall be alleviated by placing baffles or screens in the source tank and vice versa.

- Slosh forces shall be controlled by design and operation to a level below the attitude control authority of the propellant logistics system.

## 2.4 RETRIEVAL

In propellant logistics operations, the orbiter will retrieve the propellant tank module or tug and deorbit it to earth in the shuttle cargo bay (Figure 6).

Potential hazards for the study model retrieval operations were identified and hazard analyses performed.

CONCLUSION

- Propellant logistic elements may be returned to earth in the shuttle cargo bay if propellants have been dumped and leakage is within specifications.

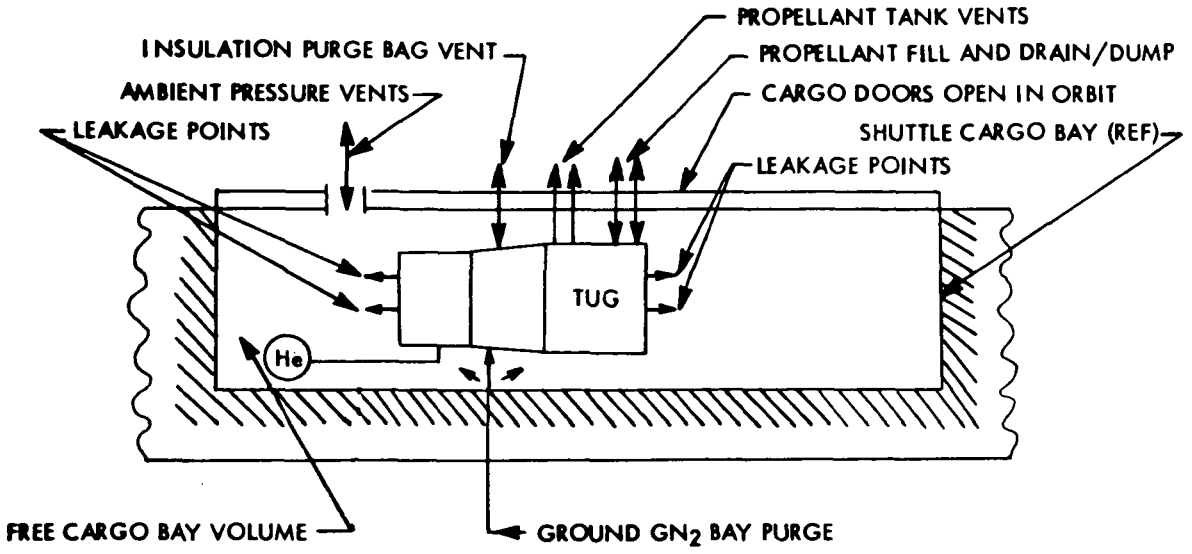


Figure 6. Tug Emplaced in Shuttle Cargo Bay

RECOMMENDATIONS

- The design of propellant logistics elements shall eliminate the possibility of mixing propellants in any space where the combination could reach pressures of 2 mmHg or greater.

- Propellant logistics elements shall have the capability to dump liquid propellants prior to deorbit and reentry in a manned vehicle.

- Leak checks shall be performed on propellant logistics systems to verify that leakage is within tolerance prior to fluid transfer or prior to reentry in the shuttle cargo bay.

- A means shall be provided to verify that the fluid lines of propellant logistics elements are connected and that leakage at the interface is within specifications.

- Propellant modules that have been depressurized to vacuum shall not be returned in the shuttle as long as solid propellants remain in propellant tanks. Solidified particles of propellants on module or cargo bay surfaces shall not be deorbited but delayed until solids have sublimed. Worst case delay for the shuttle will be several hours if the bay is oriented for maximum heating.

- During the preparation for shuttle deorbit, the tank pressure of the propellant logistic element must be verified to be within structural limits under atmosphere pressure conditions before committing to deorbit. Tank collapse when the orbiter reaches the atmosphere could cause massive leaks of hydrogen that would mix with atmospheric oxygen inside the cargo bay and be ignited by heat, shock, or catalytic action and lead to loss of the orbiter and crew. If the tank pressure cannot be verified to be acceptable, it shall not be returned in the shuttle.

- The residual propellants in the tanks shall not be greater than the amount that could be vented without overpressurizing the tanks if all liquids were suddenly converted to gas by contacting hot spots on the tank walls.

## 2.5 ABORT

Emergency abort conditions occurring during delivery of a propellant logistics element to orbit in the shuttle cargo bay were evaluated. The abort regimes are shown in Figure 7. Mode 1 covers a booster failure during the period from liftoff to the time before the shuttle reaches once-around abort capability. Mode 2 covers a shuttle failure with once-around abort capability. The principal conclusions and recommendations are:

- In case of shuttle suborbital abort, the propellant logistics element shall have the capability to safely dump propellants to meet the 40,000-lb landing limitation in the minimum time available for propellant dumping.

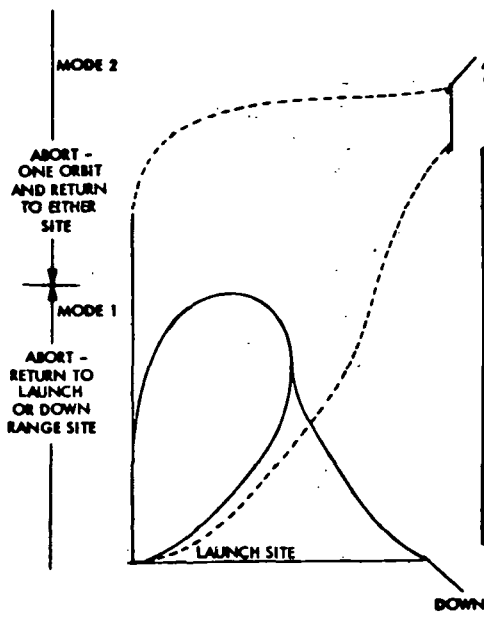


* APPROX STAGING TIME

MODE 1 - BOOSTER FAILURE - 200-300 ORBITER FLIGHT TIME - DUMP LOX

MODE 2 - ORBITER FAILURE - ONE ONCE AROUND ORBIT CAP - DUMP & SAFE TUG TANKS

| FLIGHT REGIME (SEC) | FLIGHT TIME TO LAND (SEC) | PROPELLANT DUMP ABILITY | SAFETY CONSIDERATIONS |
|---|---|---|---|
| MODE 1 *140* | 200-300 | • LOX CAN BE DUMPED<br>• $LH_2$ WILL BE KEPT ON BOARD | • DUMP LOX<br>• SAFETY HAZARD WITH $LH_2$ DUMP IN ATMOSPHERE |
| MODE 2 + 140* AFTER STAGING | 6000 | • BOTH LOX AND $LH_2$ CAN BE DUMPED (TIME REQ'D TO DUMP BOTH 27 MINS) | • SAFEST ABORT POSSIBLE |

Figure 7. Abort Regimes

- Propellant logistics elements in the shuttle cargo bay which contain both $LO_2$ and $LH_2$ shall dump only the $LO_2$ under suborbital abort conditions and dump both propellants under once-around abort conditions.

## 2.6 SLUSH HYDROGEN

One of the safety considerations during the study was the delivery of slush hydrogen for use in space-based vehicles. Slush hydrogen ($SH_2$) is a mixture of small solid hydrogen particles and liquid hydrogen which can be transferred much like a liquid. The mixture offers the advantage of substantially increasing the bulk propellant heat capacity which potentially results in reduced boiloff losses. Additional advantages of slush hydrogen are an increase in bulk density, which suggests a smaller storage tank, and lower tank storage pressures, resulting in reduced pressurization gas requirements. The most efficient use of slush hydrogen would be with large space-based vehicles such as the CIS and RNS, which have long storage times in space.

The principal conclusions and recommendations for safety in the use of slush hydrogen are:

- An insulation failure on the long line runs from the slush facility or on the propellant tanks in the shuttle cargo bay during the fill operation could result in heat leaks that would melt solid fractions. The melting solid would expand and overflow the tank. One pound of $LH_2$ forms 194.5 $ft^3$ of gas at 25 C and 1 atmosphere with a volume change of 860. This high volume flow in long vent lines could reflect high backpressures into the propellant logistics module and overstress the tank.

- Any transfer operation involving slush hydrogen must have the flow through the transfer lines exceeding the critical velocity at all times. Below this velocity the solid particles will settle out of the liquid and may cause line blockage at a restriction in the systems.

- Propellant logistics systems that utilize slush propellants must be capable of operating with varying solid fractions.

- Slush hydrogen should not be used with propellant settling capillary devices because the solid particles may restrict or block the capillary channels.

## 2.7 RESIDUAL HAZARDS

Catastrophic and critical hazards encountered in propellant logistics operations were identified and analyzed. The objective of preventive measures was to reduce these hazards to at least marginal and preferably negligible. After the application of the preventive measures, if the hazard still remained at a catastrophic or critical level, then the hazard was residual.

Included in the 33 identified residual hazards are:

- Propellant leakage or venting into cargo bay - The accumulation of hydrogen at or above the critical concentration level of 4% by volume in the cargo bay would be catastrophic to the orbiter and crew.

- Unknown propellant quantity - The lack of knowledge on the quantity of propellants for mission completion, RCS action, and orbiter landing weight could result in loss of mission, orbiter, or crew.

- Sloshing disturbances - Overall vehicle dynamics is critical to the success of propellant logistics operations and any factor such as sloshing or propulsive leakage that could lead to the loss of stability is a residual hazard.

- Negative tank pressure - Tank implosion would introduce combustible gases into the cargo bay and be catastrophic to the orbiter and crew.

- System failure vehicle docking - A failure in any one of the several systems involved could introduce critical hazards.

- Reduction of vision - The provision of retractable shields to reduce the formation of ice on visual aids reduces the hazard from catastrophic to critical. The finite reaction time for the operator to actuate the controls still leaves the chance that some clouding would occur and results in a critical residual.

## 2.8 TRADE STUDIES

One of the objectives of the system safety analysis was to conduct trade studies of candidate systems, concepts, and modes to recommend the safest of the options. Safety evaluations for propellant transfer were made for four tug concepts, four CIS/RNS concepts, a modular CIS/RNS concept, and an orbiter-to-orbiter concept. In these propellant logistics transfer operations, the orbiter may be attached or it may be at a standoff position. It was concluded that the safety requirements for the combined configuration are greater when the orbiter is attached. Having integrated the man-compatibility requirements into the attached systems, the significant consideration is the time the orbiter crew will be committed to the transfer operation.

### SAFETY EVALUATIONS OF FOUR TUG PROPELLANT TRANSFER CONCEPTS

The trade study conclusions and recommendations for the four tug propellant transfer concepts shown in Figure 8 and Table 3 are:

- Concept A, in-bay rotation, is the safety preferred concept because the module is not deployed from the bay and mating and demating operations at the orbiter interconnect fixture interface are eliminated.

- Concept B, deployed rotation, and Concept C, deployed linear, have increased impact hazards.

- Concept B, deployed rotation, and Concept C, deployed linear, are both acceptable concepts.

- Concept D, separate linear, is the only concept with the orbiter not attached during propellant transfer. It is an acceptable concept with a safety rating below Concept A because of increased deployment and docking hazards and because of increased leakage potential at the orbiter/module interconnect fixture interface.

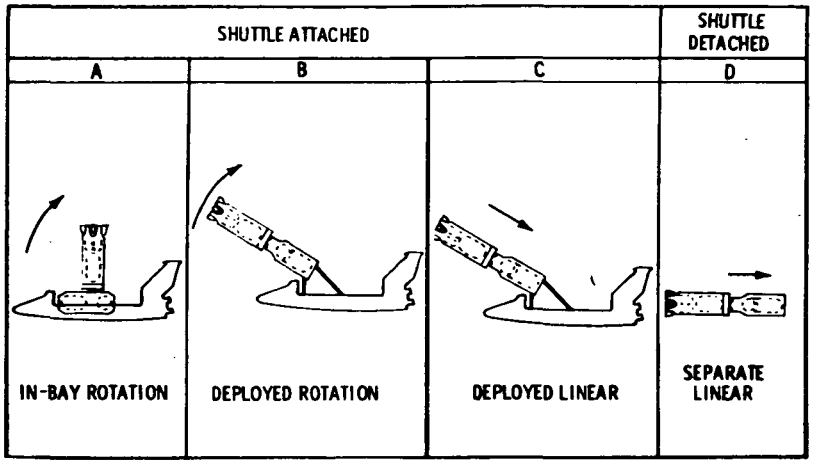


Figure 8. Transfer Options for Typical Tug Concepts

Table 3. Evaluation for Tug Propellant Logistics Elements

| Safety Consideration | Configuration A | B | C | D |
|---|---|---|---|---|
| 1. Number of critical operations | 1 | 2 | 2 | 2 |
| 2. Number of failure effects: | | | | |
| a. On crew | 3 | 3 | 3 | 1 |
| b. On structure | 1 (A) | 2 | 2 | 3 (B) |
| 3. Crew exposure to risks during normal operations | 3 | 3 (C) | 3 (C) | 1 (D) |
| 4. Attitude control capability of total configuration | 1 | 2 | 2 | 2 |
| 5. Impact control | 1 | 3 (E) | 3 (E) | 3 (F) |
| 6. Man compatibility | | | | |
| a. Tug | 1 | 1 | 1 | 2 (G) |
| b. Propellant tank module | 1 | 1 | 1 | 2 (G) |
| 7. Communication control | 2 | 2 | 1 | 1 |
| 8. Leakage control | 1 | 2 (H) | 2 (H) | 2 (I) |
| Total | 15 | 21 | 20 | 19 |
| Overall Rating | 1 | 2 | 2 | 2 |

1 = best
4 = worst

(A) Greater stability of configuration
(B) Loss of remote control capability
(C) Longer transfer time
(D) Orbiter at standoff during transfer
(E) Hard dock involved
(F) Add rendezvous & docking
(G) Some subsystem not man-rated
(H) Flex hose in system
(I) Additional disconnects

SAFETY EVALUATION OF FOUR CIS/RNS PROPELLANT TRANSFER CONCEPTS

The trade study conclusions and recommendations for the four CIS/RNS propellant transfer concepts shown in Figure 9 and Table 4 are:

- Concept A, separate rotation, and Concept B, deployed rotation, have conditions of ullage control which result from the c.g. of the configuration falling within the CIS/RNS tankage. For this reason, only Concept B was included in the evaluation to provide a comparison for Concepts C and D.

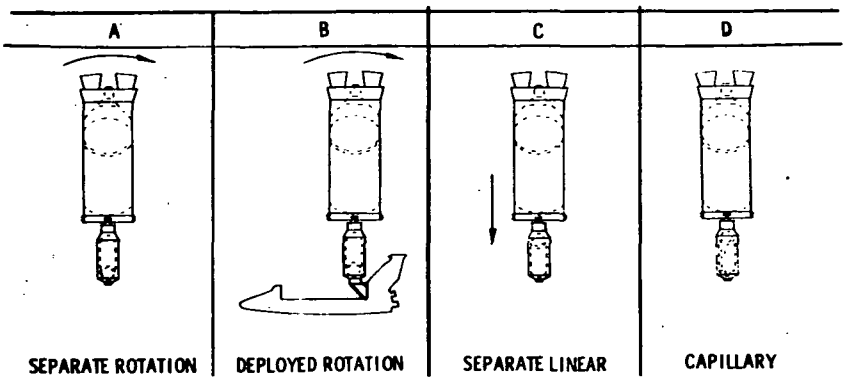


Figure 9. Transfer Options for Typical CIS/RNS Concepts

- Concept C, separate linear, and Concept D, capillary, are both acceptable concepts. The former concept is preferred for safety reasons because of the state of the art with capillary systems.

SAFETY EVALUATION OF A MODULAR CIS/RNS CONCEPT

A modular CIS/RNS concept was evaluated (Figure 10 and Table 5) for comparison with the fluid transfer concepts. The safety evaluation showed that this is a competitive concept for modular users.

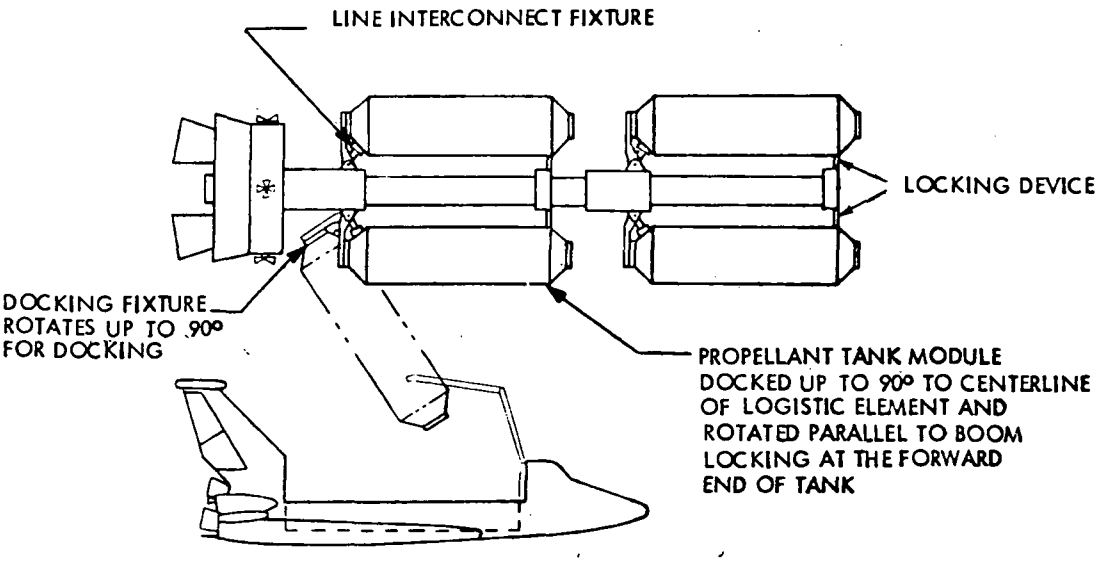


Figure 10. Typical Modular Transfer Concept

Table 4. Evaluation for CIS/RNS Propellant Logistics Elements

| Safety Consideration | Configuration | | |
|---|---|---|---|
| | Rotation Concept B | Linear Concept C | Capillary Concept D |
| Number of critical operations | 3 | 1 | 1 |
| Number of failure effects: | | | |
| A. On crew | 3 | 1 | 1 |
| B. On structure | 3 | 1 | 2 |
| Crew exposure to risks during normal operations | 2 | 1 | 1 |
| Attitude control capability of total configuration | 3 | 2 | 1 |
| Impact control | 2 | 1 | 1 |
| Man compatibility | | | |
| CIS/RNS | 1 | 1 | 1 |
| Propellant tank module | 1 | 2 | 2 |
| Communication control | 2 | 1 | 1 |
| Leakage control | 2 | 1 | 1 |
| Total | 22 | 12 | 12 |
| Overall Rating | 3 | 1 | 1 |

Table 5. Evaluation for Modular Concept, Propellant Logistics Elements

| Safety Consideration | Configuration |
|---|---|
| | Modular Concept, CIS/RNS Type |
| Number of critical operations | 3 |
| Number of failure efforts: | |
| A. On crew | 1 |
| B. On structure | 2 |
| Crew exposure to risk during normal operations | 1 |
| Attitude control capability of total configuration | 1 |
| Impact control | 1 |
| Man compatibility | Not applicable |
| Communication control | 1 |
| Leakage control | 2 |
| Total | 12 |
| Overall Rating | 1 |

SAFETY EVALUATION OF ORBITER-TO-ORBITER PROPELLANT TRANSFER CONCEPTS

During orbital logistics operations, the shuttle orbiter may require that its RCS or OMS propellants be replenished before deorbit is attempted. The replenishment of propellants to the orbiter was evaluated from a system safety viewpoint. One concept involved the use of flex lines attached to a manipulator arm which connected the line to the airborne half of the ground fill-and-drain quick disconnect of the orbiter (Figure 11). Other concepts considered required the transfer of modular kits from one orbit to the other. The principal conclusions are:

- Transfer of propellants through long flex lines from one orbiter to another to the external fill-and-drain disconnect will eliminate the potential hazard of leakage in the cargo bay.

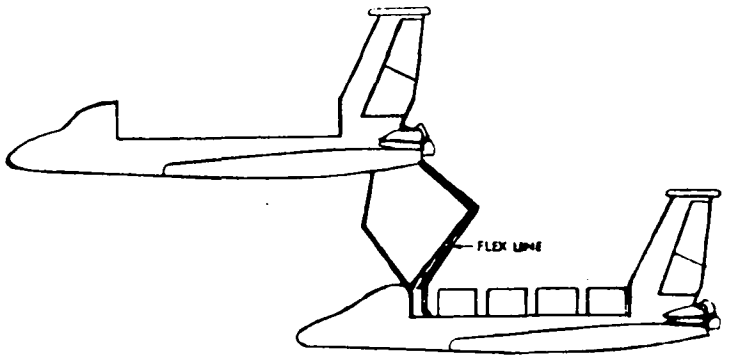


Figure 11. Orbiter-to-Orbiter Transfer Concept

- Use of long flex lines will create hazardous stowing problems and will require heaters to avoid line blockage during transfer.

- Transfer of propellant kits from one cargo bay to the other will increase the potential for impact damage to the orbiters.

- The additional preplumbed propellant lines to the interconnect fixture in the shuttle orbiter cargo bay and the mating operation of the propellant kits in the bay increase the potential for the leakage hazard.

## 2.9 CONCLUSIONS

The system safety analysis was performed to determine the recommended safety guidelines for implementing in-space propellant logistics operations. Several major conclusions were formulated:

1. In-space propellant logistics operations can be performed safely with storage and without storage concepts.

2. Propellant delivery directly to a user without storage is a safer concept than with storage because of the reduced number of critical operations.

3. Nondeployment of the propellant tank module from the orbiter cargo bay is the recommended safety concept for propellant transfer to tug-type vehicles.

4. Deployment of a propellant logistics element from the orbiter cargo bay for soft docking to another element should be accomplished with a combination of the manipulator and rotational deployment mechanisms.

5. Modular transfer of propellants to modular users is a recommended concept.

6. Rotational and linear accelerations during fluid transfer are both safe concepts for propellant settling.

7. Fluid transfer from a propellant tank module to a small (tug-type) vehicle may be performed safely with the orbiter attached or the orbiter not attached.

8. Fluid transfer from a propellant tank module to a large (LSF, CIS, or RNS) vehicle should be accomplished with the orbiter not attached.

9. The effect of disturbances resulting from fluid instability and their effect on vehicle control systems during propellant logistics operations is a potential residual hazard.

10. Large propellant leaks in space which solidify in the cargo bay will sublime in a few hours if the bay is oriented for maximum heating.

11. Propellant leakage or venting in the cargo bay during deorbit operations is a potential residual hazard.

12. Propellant logistics elements can be returned to earth safely in the orbiter cargo bay if propellant leakage is within specification and if the pressure relief capability provided for the tanks allows for a rapid change of the liquid residual propellants to a gas without exceeding acceptable tank pressures.

13. Uniformity and commonality of interface for docking, stowing, and transfer operations between interfacing propellant logistics elements (including orbiter) is required.

# 3.0 SUGGESTED ADDITIONAL EFFORT

System safety analyses have identified areas requiring efforts that are beyond the scope of the study. Because of the potential hazards associated with these areas, resolution should be considered prior to space shuttle/propellant logistics element integration.

DYNAMIC CONTROL OF VARIOUS MATED CONFIGURATIONS

Disturbances such as sloshing, impact, and fluid surface distortion are present in propellant logistics operations. The effect of these disturbances acting on various elements or combinations of docked elements cannot be fully investigated without study of the coupling effects of the elements' structural dynamics and RCS action when influenced by the disturbances in zero g. A study is required to provide visibility on the sensitivity of these variables during critical propellant logistics operations.

ZERO-G LEAK DETECTION

Zero-g leak detection devices and sensing techniques should be developed for use with orbital propellant logistics operations.

LOW-THRUST RCS

A long-life, low-thrust RCS should be developed for safe linear acceleration propellant settling operations.

ZERO-G PROPELLANT GAUGING

Random orientation of propellants ($LH_2$, $SH_2$, $LO_2$) in zero g requires a study of quantity gauging techniques for propellant logistics tanks in orbital use. The potential loss of tank thermal protective environment causing hot spots makes this measurement a critical item for earth return of the tank module in the orbiter cargo bay.

VAPORIZATION OF RESIDUAL PROPELLANTS

Sloshing of residual propellants against a warm wall of a tank in the cargo bay during deorbit and landing could cause the fluid to flash to a vapor. A transient analysis which considers the parameters influencing the residual propellants in the tank should be conducted. The investigation should provide design consideration relating to vent sizing, tank volumes, and residual propellant quantities as a function of heat inputs anticipated for various insulation efficiencies.