NASA TECHNICAL NOTE

N73-24653

NASA TN D-7271

NASA TN D-7271

CASE FILE COPY

A LOW-COST INERTIAL SMOOTHING SYSTEM FOR LANDING APPROACH GUIDANCE

by Frank R. Niessen

Langley Research Center
Hampton, Va. 23665

NATIONAL AERONAUTICS AND SPACE ADMINISTRATION • WASHINGTON, D. C. • JUNE 1973

1. Report No.	2. Government Accession No.	3. Recipient's Catalog No.
NASA TN D-7271		

4. Title and Subtitle	5. Report Date
A LOW-COST INERTIAL SMOOTHING SYSTEM FOR LANDING APPROACH GUIDANCE	June 1973
	6. Performing Organization Code
7. Author(s)	8. Performing Organization Report No.
Frank R. Niessen	L-8763
9. Performing Organization Name and Address	10. Work Unit No.
NASA Langley Research Center Hampton, Va. 23665	760-63-04-01
	11. Contract or Grant No.
12. Sponsoring Agency Name and Address	13. Type of Report and Period Covered
National Aeronautics and Space Administration Washington, D.C. 20546	Technical Note
	14. Sponsoring Agency Code

15. Supplementary Notes

16. Abstract

Accurate position and velocity information with low noise content for instrument approaches and landings is required for both control and display applications. In a current VTOL automatic instrument approach and landing research program, radar-derived landing guidance position reference signals, which are noisy, have been mixed with acceleration information derived from low-cost onboard sensors to provide high-quality position and velocity information.

An in-flight comparison of signal quality and accuracy has shown good agreement between the low-cost inertial smoothing system and an aided inertial navigation system. Furthermore, the low-cost inertial smoothing system has been proven to be satisfactory in control and display system applications for both automatic and pilot-in-the-loop instrument approaches and landings.

17. Key Words (Suggested by Author(s))	18. Distribution Statement
Landing approach guidance Inertial smoothing Terminal area navigation	Unclassified – Unlimited

19. Security Classif. (of this report)	20. Security Classif. (of this page)	21. No. of Pages	22. Price*
Unclassified	Unclassified	30	$3.00*

*For sale by the National Technical Information Service, Springfield, Virginia 22151

A LOW-COST INERTIAL SMOOTHING SYSTEM FOR LANDING APPROACH GUIDANCE

By Frank R. Niessen
Langley Research Center

SUMMARY

Accurate position and velocity information with low noise content is required for instrument approaches and landings, for both control and display applications. However, current landing guidance systems provide position reference signals with so much noise that velocity information often cannot be obtained through differentiation without resulting in unacceptable noise or unacceptable time lags if filtering is employed to reduce the noise. An inertial navigation system or, perhaps, a Doppler velocity system could be used for this purpose, but such systems are expensive, particularly if redundant systems are required for a fail-operational capability.

In a current VTOL automatic instrument approach and landing research program, landing guidance position reference signals have been smoothed by using a mix-filter technique. The inputs to the mix filter include both inertial acceleration inputs, which provide high-frequency position and velocity information, and also radar position inputs, which provide low-frequency position and velocity information. Low-cost aircraft instrumentation, including attitude reference gyros and body-mounted accelerometers, have been used to provide the inertial acceleration information. Since the onboard inertial information is relied on for only short periods of time in this application, high-quality inertial sensors are not required. An in-flight comparison of signal quality and accuracy has shown good agreement between the low-cost inertial smoothing system and an aided inertial navigation system. Furthermore, the low-cost inertial smoothing system has been proven to be satisfactory in control and display system applications for both automatic and pilot-in-the-loop instrument approaches and landings.

INTRODUCTION

For the precision instrument approach and landing task, aircraft require accurate inertial (that is, ground referenced) position and velocity information. This information will be necessary for automatic landings to touchdowns and for time-constrained landing approaches in the terminal area. Inertial position and velocity information are particularly necessary for the V/STOL instrument approach and landing, because at low speeds

these aircraft and, especially, their flight paths can be greatly affected by gusts and wind shears. It can be assumed that position information will be provided by a ground-based tracking station, such as the proposed microwave landing system, but this position information is expected to be too noisy to differentiate to obtain acceptable velocity information. An inertial navigation system or, perhaps, a Doppler velocity system could be used for this purpose, but such systems are expensive and if redundant systems were required, the cost could be prohibitive for most potential operators.

A promising concept is that of a low-cost inertial smoothing system, where relatively low-cost aircraft instrumentation, attitude reference gyros and body-mounted accelerometers, can be used to provide short-term inertial navigation. This information is mixed with position information from the landing guidance system to obtain accurate estimates of velocity and position. This report presents the theoretical background which has been used in dealing with this particular estimation problem. In addition, flight-test results are presented for a low-cost inertial smoothing system which has been developed for use in a current VTOL automatic instrument approach and landing research program.

SYMBOLS

Values are given in both SI and U.S. Customary Units. The measurements and calculations were made in U.S. Customary Units.

A,B,C	matrices
a_x,a_y,a_z	body-mounted accelerometer outputs, m/sec^2 (ft/sec^2)
$\underline{b},\underline{c}$	single column matrices or vectors
g	gravity constant, 9.8 m/sec^2 (32.2 ft/sec^2)
K	gain matrix
k	element of gain matrix
R	Riccati equation matrix solution
s	Laplacian operator
t	time, sec

$\underline{u}$ control input vector

$\underline{v}$ input noise vector

$\underline{w}$ measurement noise vector

X,Y,Z displacement in runway reference coordinate frame (see fig. 3), m (ft)

$\ddot{X}_h, \ddot{Y}_h, \ddot{Z}_h$ inertial accelerations in aircraft reference coordinate frame (see fig. 3), m/sec^2 (ft/sec^2)

$\underline{x}$ state vector

$\underline{y}$ output vector

ζ damping ratio

θ pitch attitude, positive nose upward, rad

σ_v^2 variance of input signal noise

σ_w^2 variance of measurement signal noise

τ time constant, sec

ϕ roll attitude, positive right wing down, rad

ψ yaw attitude, positive nose right, rad

ω_n undamped natural frequency, rad/sec

Superscript:

T matrix transpose

A dot over a symbol indicates a derivative with respect to time. A circumflex (^) denotes an estimated value.

THEORETICAL BACKGROUND

Differentiation of Position Information

There are inherent problems in differentiating position information to obtain velocity information, because of signal noise. Of course, position and velocity information which is to be used in display or control system applications must be practically noise free. Figure 1 shows the transfer function for approximate differentiation, which is a typical approach. This method is referred to as approximate differentiation because the output is actually the rate of change of the input filtered with a first-order lag with a time constant τ. The time response shows that for a unit step input, the resultant output is a pulse with amplitude $1/\tau$. The effect of filtering or lagging a feedback signal is to reduce the stability of the closed-loop system. From this standpoint, it is necessary that τ be as small as possible. However, it can be seen that any high-frequency noise which is part of the position signal will be amplified by a factor of $1/\tau$; thus, to attenuate the high-frequency noise, it is necessary that τ be larger than 1.0.

A trade-off has to be made between lag and noise level, but more frequently than not, an acceptable trade-off cannot be made. This is true simply because the noise level associated with position information from current landing guidance systems is such that even with the maximum acceptable lag, an acceptable level of noise for the velocity output cannot be obtained. For example, even if a lag of 0.5 second and a peak-to-peak noise level of 0.3048 m/sec (1.0 ft/sec) would be acceptable, these conditions would require a position signal with a peak-to-peak noise level of only 0.1524 m (0.5 ft), which is unrealistically low for current landing guidance systems. Figure 2 is a time history obtained from the GSN-5 precision radar facility at Wallops Station which is described in appendix A. The velocity information was obtained by the GSN-5 computer by use of an approximate differentiation circuit with a time constant of 0.5 second. The peak-to-peak noise on the velocity signal is on the order of 3.048 to 6.096 m/sec (10 to 20 ft/sec) and thus indicates that the peak-to-peak noise on the position signal is 1.524 to 3.048 m (5 to 10 ft). So, even for a precision tracking radar, the position signal noise is an order of magnitude greater than the value that would be acceptable. The proposed microwave landing system, as noted in reference 1, has a specification for a one-sigma accuracy of only 3.048 m (10 ft) for slant range for the most advanced configuration. For these reasons, differentiation of position information, by itself, does not appear to be a very promising approach.

Inertial Smoothing Concept

The inertial smoothing mix filter combines acceleration with position data to determine low-noise estimates of both velocity and position. The coordinate frames of refer-

ence which were used in measuring aircraft acceleration and position are depicted in figure 3. A simplified approach to the estimation problem was adopted by using three independent mix filters, any correlation in the noise characteristics of the X, Y, and Z position signals being ignored. Figure 4 illustrates the mix-filter configuration which was used for inertial smoothing. It is noted that the form of the mix filter for this particular estimation problem is identical to that of a Kalman filter. The part of the system drawn with solid lines (fig. 4) represents the high-frequency computation of velocity and position, based on aircraft acceleration. There is no lag as acceleration is integrated directly once to obtain velocity and twice to obtain position. Note that the mix filter provides a position estimate as well as a velocity estimate. As drawn with dashed lines (fig. 4), the difference between the estimated position and the position measured by the tracking station is fed back as a correction to both the velocity estimate and the acceleration input. In contrast to approximate differentiation, the velocity estimate is the output of an integrator which attenuates noise on the position input and also the accelerometer. For additional information, table I contains transfer functions which indicate the response of each of the estimator outputs to individual acceleration and position inputs.

The selection of the mix-filter gains was based on the general steady-state Kalman filter solution for this particular estimation problem. Given the noise properties of the inputs, the Kalman filter solution provides the gains for an optimal estimator in the sense that the estimates will have minimum variance noise. The results of the general solution for this particular filter are discussed here, and a more detailed treatment of the solution is given in appendix B.

The gains k_1 and k_2 can be expressed in terms of the familiar second-order parameters ζ and ω_n as $k_1 = 2\zeta\omega_n$ and $k_2 = \omega_n^2$. The damping ratio was found to be constant and the undamped natural frequency was determined to be a function only of the ratio of accelerometer noise to position noise

$$\zeta = \frac{\sqrt{2}}{2} = 0.707$$

$$\omega_n = \sqrt{\sigma_v/\sigma_w}$$

It is important to note that the solution is dependent only on the relative noise between the inputs and not on the absolute noise levels. It is possible that if the absolute noise levels were too high, the mix filter would provide estimates which could be unacceptably noisy.

FLIGHT-TEST VALIDATION OF INERTIAL SMOOTHING CONCEPT

System Description

A system based on the concept of inertial smoothing has been used in a current VTOL automatic approach and landing research program. This system, which will be

described here, was installed in the research helicopter shown in figure 5. The onboard sensors used were low-cost autopilot quality sensors as compared with more expensive, higher quality sensors that are used in inertial navigation systems. Several approximations were made to minimize computational requirements, based on the assumption of small pitch and roll angles during the final approach and landing maneuver for the research tests. These approximations did not degrade the system for its intended use, nor do they in any way imply a limitation of the concept itself.

The general arrangement of the system is depicted in figure 6. The body-mounted longitudinal and lateral accelerometers have been corrected for the effects of gravity by using the sine of pitch and roll angles from the onboard vertical gyro

$$\ddot{X}_h = a_x - g \sin \theta$$

$$\ddot{Y}_h = a_y + g \sin \phi$$

The normal accelerometer has been corrected for effects of gravity by assuming small pitch and roll angles

$$\ddot{Z}_h = a_z - g \cos \theta \cos \phi$$

$$\ddot{Z}_h \approx a_z - g$$

In resolving the accelerations along the body axes into the runway reference coordinate frame, it has been assumed that the longitudinal and lateral axes are nearly in the horizontal plane so that

$$\ddot{X} \approx \ddot{X}_h \cos\left(\psi - \psi_o\right) - \ddot{Y}_h \sin\left(\psi - \psi_o\right)$$

$$\ddot{Y} \approx \ddot{Y}_h \sin\left(\psi - \psi_o\right) + \ddot{Y}_h \cos\left(\psi - \psi_o\right)$$

$$\ddot{Z} \approx \ddot{Z}_h$$

The horizontal accelerations were resolved by using a sine-cosine resolver driven by a directional gyro synchro output. A differential synchro input was incorporated to permit selection of any desired runway-reference heading ψ_o. The three position signals X, Y, and Z were obtained from the GSN-5 radar station by means of narrow-band frequency modulated (FM) telemetry equipment. The GSN-5 system itself is described in appendix A. A 10-volt analog computer has been used to perform all the necessary computations onboard the aircraft. Figure 7 is the analog computer schematic which shows the details of these computations and indicates the scaling which was used.

If the accelerometers were slaved to the vertical so that the longitudinal and lateral accelerometers would indicate true horizontal accelerations and the normal accelerometer would indicate true vertical accelerations, then the need to correct the longitudinal

and lateral accelerometers for effects of gravity would be eliminated and would make the rest of the computations valid for other than small pitch and roll angles. This was not done, however, for the system described herein.

The mix-filter gains which were used corresponded to a mix-filter natural frequency of $\omega_n = 0.45$ rad/sec with a settling time constant of 12.5 seconds, based on the time to settle within 2 percent of steady state. These gains were selected on the basis of the reasoning that the time constant should be long enough to insure that noise from the radar position signal would be satisfactorily attenuated, but short enough to insure that errors which would result from inaccuracies associated with the acceleration information would be kept small.

Flight-Test Results

As noted previously, the inertial smoothing system was developed for use in a current VTOL instrument automatic approach and landing research program. The modification of the recording system that was necessary to obtain the data presented here was restricted in order that the data could be obtained in a timely manner, without impeding the main research program. For this reason, data were obtained for only X and Y in one instance, and for only X in another instance. Nevertheless, the axes that were selected for documentation were the axes with the least desirable scale factors and, consequently, represent the worst case rather than the best.

Figures 8 and 9 show the input and output signal noise characteristics for the inertial smoothing system. These data were recorded separately for X and Y during hovering flight near the landing zone. These data were obtained by an FM magnetic tape recording system and were later sampled at a rate of 100 Hz during the data-reduction process. Longitudinal acceleration was not recorded during these tests; however, its signal noise characteristics are very similar to those of the lateral accelerometer. The noise on the position output as compared with the noise on the position input signal, which has a peak-to-peak amplitude of approximately 30.48 m (100 ft), has been greatly reduced. The noise on the position input signal was mostly due to telemetry noise, which was nearly 1 percent of full scale. The accelerometer signal noise, mainly due to aircraft structural vibration, has also been essentially eliminated by the integration process, as evidenced by the velocity estimate. It was determined that the signal noise contributed by the analog computer components themselves, which depends on computer scaling, would be expected to result in approximately 0.061 m/sec (0.2 ft/sec) peak-to-peak noise for the velocity estimate for X, for which the scaling problem was most severe. This level of computer-generated noise accounts for nearly all the noise observed on the velocity output; hence, the mix filter has essentially eliminated the effects of both acceleration and position measurement noise.

A comparison in accuracy was made in flight between the inertial smoothing system and an aided inertial navigation system. The aided inertial navigation system was a modified Gemini inertial platform system. Baseline performance data on the modified system are presented in reference 2, whereas details of this system's navigation computations, including the update logic, are described in reference 3. Both systems relied on the GSN-5 radar for long-term position and velocity information; the inertial smoothing system received continuous position information, whereas the aided inertial navigation system received position updates at 1.0-second intervals. Without updates, the position-error drift rate of the inertial navigation system was approximately 2.0 nautical miles per hour, whereas the position-error drift rate of the inertial smoothing system, without position feedback, was estimated to be on the order of 100 to 200 nautical miles per hour. This high drift rate was mainly due to approximations which were made in resolving the accelerations and also was a result of computer scaling limitations. Figure 10 shows close agreement between the outputs of the two systems for a decelerating approach to hover. Figure 11 is a hovering translation time history which compares the two systems on a much more sensitive scale. Agreement between the velocity outputs is within 0.3048 m/sec (1.0 ft/sec).

In addition to the tests discussed, the six position and velocity outputs of the inertial smoothing system have been used in both control and display applications in a VTOL automatic approach and landing research program, for which the system was developed. Displays driven by these outputs consisted of a flight-director indicator, a horizontal-situation moving-map display, lateral and vertical flight-path error needles, and simulated radar altimeter. The guidance computer, which provided pitch, roll, and power flight director display commands, also provided similar commands to the control system in the automatic approach mode. The VTOL landing approach task in these tests involved acquisition of the runway center line, capture of a 6°, 10°, or 15° glide path, deceleration to a hover, vertical descent, and touchdown. The entire sequence could be accomplished either manually (with the pilot centering the flight director commands) or automatically. Signal noise was not apparent either in the display movements or, while in the automatic mode, in the control actuator motions. The accuracy of the inertial smoothing system enabled tracking of the approach path and speed profiles with a very high degree of precision. The manual and automatic VTOL approach results obtained by using the inertial smoothing system are described in reference 4.

CONCLUSIONS

A study has been conducted at the Langley Research Center to investigate the feasibility of using low-cost, conventional aircraft instrumentation in combination with landing guidance system signals to provide acceptable position and velocity information

for landing approach guidance. Based on the work described in this report, the following conclusions have been drawn:

1. Differentiation of landing guidance system signals, by itself, will not provide adequate velocity information for use in either controls or displays since differentiation is a process which, by its very nature, tends to amplify noise. Current landing guidance systems do not provide signals which are sufficiently noise free to permit differentiation, nor does it appear likely that systems, which are now being proposed, will be capable of providing such noise-free signals.

2. Flight-test data indicated that accelerometer and radar position signal noise, approximately 1.2192 m/sec^2 (4 ft/sec^2) and 30.48 m (100 ft) double-amplitude noise, respectively, had been greatly reduced by the inertial smoothing mix filter, which provided a velocity estimate with only 0.06096 m/sec (0.2 ft/sec) double-amplitude noise.

3. An in-flight comparison of signal quality and accuracy between the low-cost inertial smoothing system and an aided inertial navigation system showed agreement to within 0.3048 m/sec (1.0 ft/sec) for the velocity outputs.

4. The concept of using low-cost autopilot quality aircraft instrumentation to provide inertial smoothing of landing guidance system signals has been validated through the use of such a system in a VTOL automatic approach and landing research program, for which the system was developed. The VTOL landing approach task involved acquisition of the runway center line, capture of a 6°, 10°, or 15° glide path, deceleration to a hover, vertical descent, and touchdown; thus, the possibility of broad applications for this concept is indicated.

Langley Research Center,
National Aeronautics and Space Administration,
Hampton, Va., April 18, 1973.

APPENDIX A

GSN-5 PRECISION RADAR

Position was sensed by the GSN-5 precision tracking radar system, located at Wallops Station, Virginia, where the flight tests were performed. A photograph of the GSN-5 is shown in figure 12. The position of the aircraft is sensed directly in terms of slant range, and azimuth and elevation angles of the radar antenna. This information is transformed into rectangular coordinates in the runway reference frame and transmitted to the aircraft by means of a narrow-band frequency modulated (FM) telemetry link.

The radar is K-band and has an antenna beamwidth of approximately 0.5°. A passive reflector has been mounted on the nose of the aircraft to provide a specific point of high-energy return in order to prevent skin tracking. The limits of the radar tracking antenna are 0° to 30° in elevation and $\pm 45^{\circ}$ in azimuth. The accuracy of the radar as specified by the manufacturer is 0.02° for the azimuth and elevation angles and 3.048 m (10 ft) or 1 percent (whichever is greater) for slant range.

APPENDIX B

FIXED-GAIN SOLUTION FOR INERTIAL SMOOTHING MIX FILTER

The general Kalman filter solution, obtained from reference 5, is outlined below. The plant dynamics are expressed as:

$$\dot{\underline{x}} = A\underline{x} + B\underline{u}$$

with measured outputs

$$\underline{y} = C\underline{x} + \underline{w}$$

The input and output measurement noise characteristics are specified by the correlation matrices Q and P, respectively. The Kalman filter gain matrix, for the stationary case, is found from

$$K = R_o C^T P^{-1}$$

where R_o is the steady-state solution of the matrix Riccati equation

$$\dot{R} = AR + RA^T - RC^T P^{-1} CR + BQB^T$$

For the inertial smoothing mix-filter problem, as shown in figure 13, the acceleration input is regarded as a control input and, as a single input, is a scalar; therefore, the B matrix is reduced to a column matrix or vector $\underline{b}$. Similarly, there is only one measured output; therefore, the C matrix becomes a row matrix $\underline{c}^T$.

$$\dot{\underline{x}} = A\underline{x} + \underline{b}u$$

where $A = \begin{bmatrix} 0 & 1 \\ 0 & 0 \end{bmatrix}$ and $\underline{b} = \begin{bmatrix} 0 \\ 1 \end{bmatrix}$

$$y = \underline{c}^T \underline{x} + w$$

where $\underline{c} = \begin{bmatrix} 1 \\ 0 \end{bmatrix}$

The correlation matrices Q and P are reduced to the scalar quantities σ_v^2 and σ_w^2. The matrix Riccati equation, therefore, becomes

$$\dot{R} = AR + RA^T - R\underline{c}\left(\frac{1}{\sigma_w^2}\right)\underline{c}^T R + \underline{b}\left(\sigma_v^2\right)\underline{b}^T$$

The steady-state solution is found by setting $\dot{R} = 0$. Taking each element of $\dot{R}$,

$$\dot{r}_{11} = 0 = r_{21} + r_{12} - \left(\frac{1}{\sigma_w^2}\right) r_{11}^2$$

$$\dot{r}_{12} = 0 = r_{22} - \left(\frac{1}{\sigma_w^2}\right) r_{11} r_{12}$$

$$\dot{r}_{21} = 0 = r_{22} - \left(\frac{1}{\sigma_w^2}\right) r_{21} r_{11}$$

$$\dot{r}_{22} = 0 = -\left(\frac{1}{\sigma_w^2}\right) r_{21} r_{12} + \sigma_v^2$$

By using the fact that the R matrix is symmetric and that $r_{21} = r_{12}$, these equations can be reduced to

$$0 = 2r_{12} - \left(\frac{1}{\sigma_w^2}\right) r_{11}^2$$

$$0 = r_{22} - \left(\frac{1}{\sigma_w^2}\right) r_{12} r_{11}$$

$$0 = -\left(\frac{1}{\sigma_w^2}\right) r_{12}^2 + \sigma_v^2$$

From these equations, the steady-state values for the elements of R have been found to be

$$R_o = \begin{bmatrix} r_{11} & r_{12} \\ r_{21} & r_{22} \end{bmatrix} = \begin{bmatrix} \sqrt{2}\sigma_v^{1/2}\sigma_w^{3/2} & \sigma_v\sigma_w \\ \sigma_v\sigma_w & \sqrt{2}\sigma_v^{3/2}\sigma_w^{1/2} \end{bmatrix}$$

The gains are obtained from

$$\underline{k} = \begin{bmatrix} k_1 \\ k_2 \end{bmatrix} = R_o \underline{c} \left(\frac{1}{\sigma_w^2}\right)$$

and result in $k_1 = \sqrt{2}\sqrt{\sigma_v/\sigma_w}$ and $k_2 = \sigma_v/\sigma_w$. By expressing the gains as $k_1 = 2\zeta\omega_n$ and $k_2 = \omega_n^2$, it may be shown that $\omega_n = \sqrt{\sigma_v/\sigma_w}$ and $\zeta = \sqrt{2}/2 = 0.707$.

REFERENCES

1. Signal Format Development Team: RTCA-SC-117 Microwave Scanning Beam Landing Guidance System. Paper 178-70/SC117SFDT-26, Radio Tech. Comm. Aeronaut., Aug. 1970.

2. Madigan, Ronald J.: Flight Test Experiments To Evaluate Aided-Inertial System Performance for Terminal Guidance. J. Inst. Nav., vol. 17, no. 1, Spring 1970, pp. 83-91.

3. Anon.: V/STOL Inertial Navigation With Radar Update Capability. IBM No. 69-NC7-027 (Contract No. NAS 12-610), IBM Corp., Aug. 1969. (Available as NASA CR-86234.)

4. Kelly, J. R.; Niessen, F. R.; and Garren, J. F.: A Manual-Control Approach to Development of VTOL Automatic Landing Technology. Amer. Helicopter Soc. Preprint No. 742, May 1973.

5. Schultz, Donald G.; and Melsa, James L.: State Functions and Linear Control Systems. McGraw-Hill Book Co., Inc., c.1967.

TABLE I.- TRANSFER FUNCTION RELATIONSHIPS FOR INERTIAL SMOOTHING MIX FILTER

Input	Output for –	
	$\hat{\dot{X}}$	$\hat{X}$
$\ddot{X}$	$\dfrac{s + k_1}{s^2 + k_1 s + k_2}$	$\dfrac{1}{s^2 + k_1 s + k_2}$
X	$\dfrac{k_2 s}{s^2 + k_1 s + k_2}$	$\dfrac{s k_1 + k_2}{s^2 + k_1 s + k_2}$

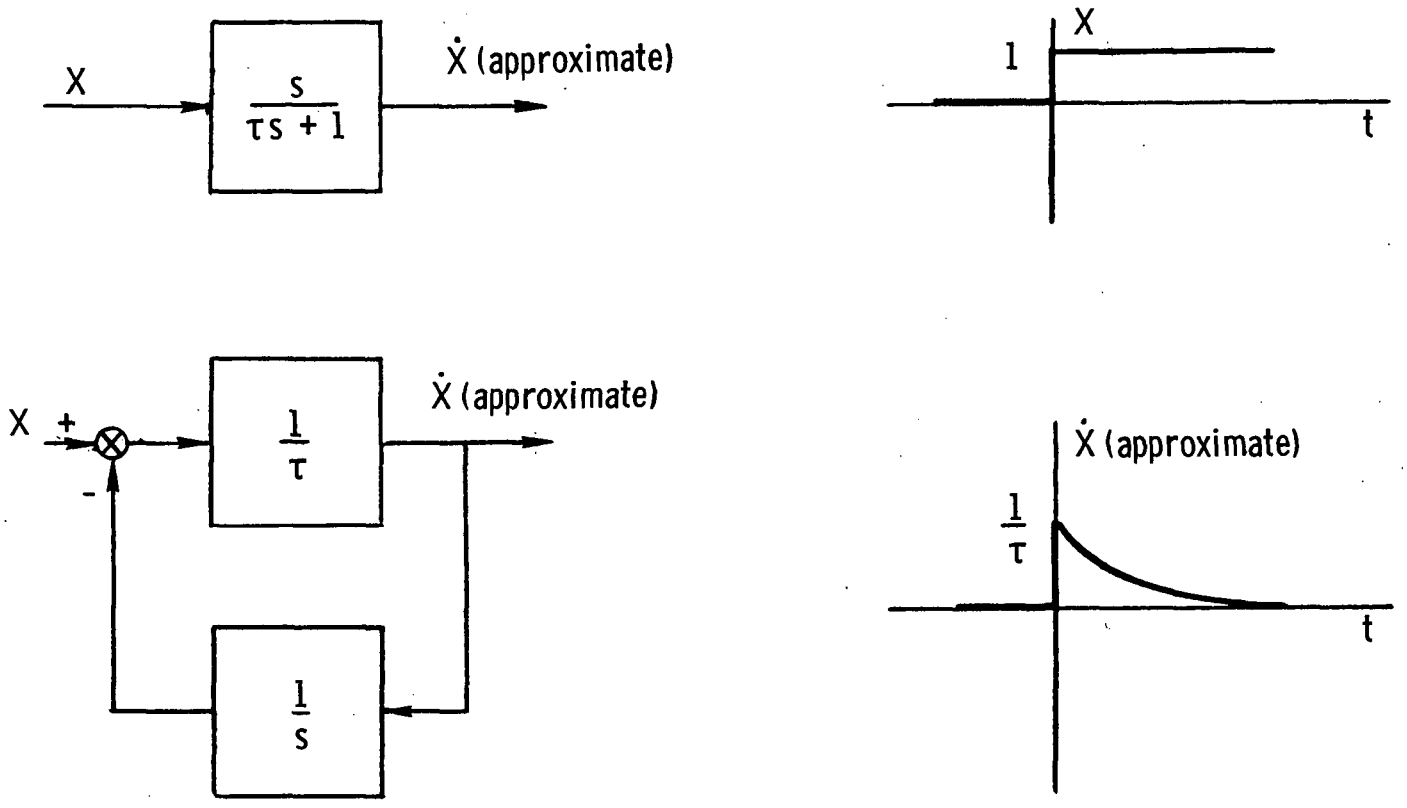

(a) Transfer function.

(b) Time response.

Figure 1.- Transfer function and time response for approximate differentiation.

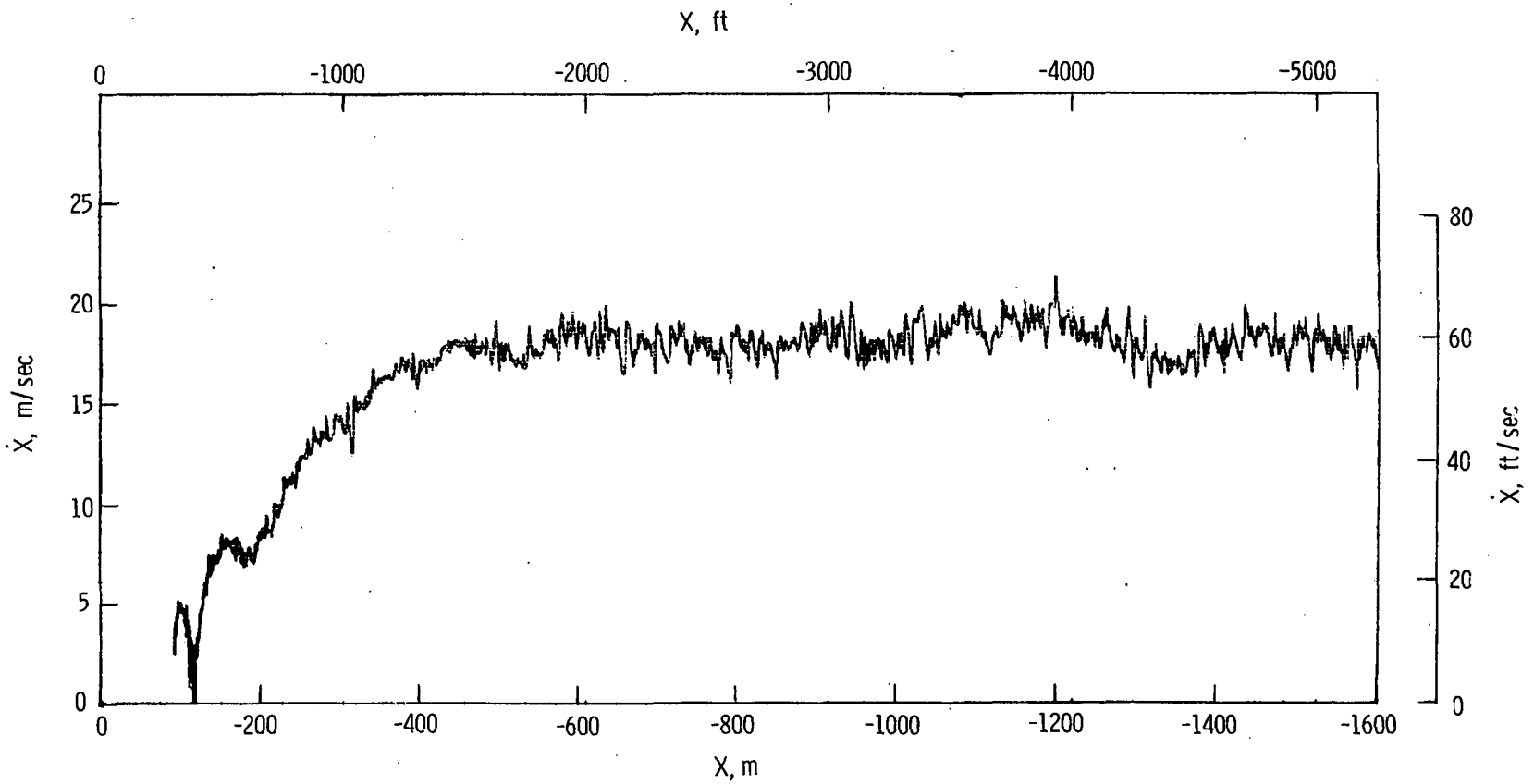

Figure 2.- Approximate differentiation of a precision radar signal. $\tau = 0.5$ sec.

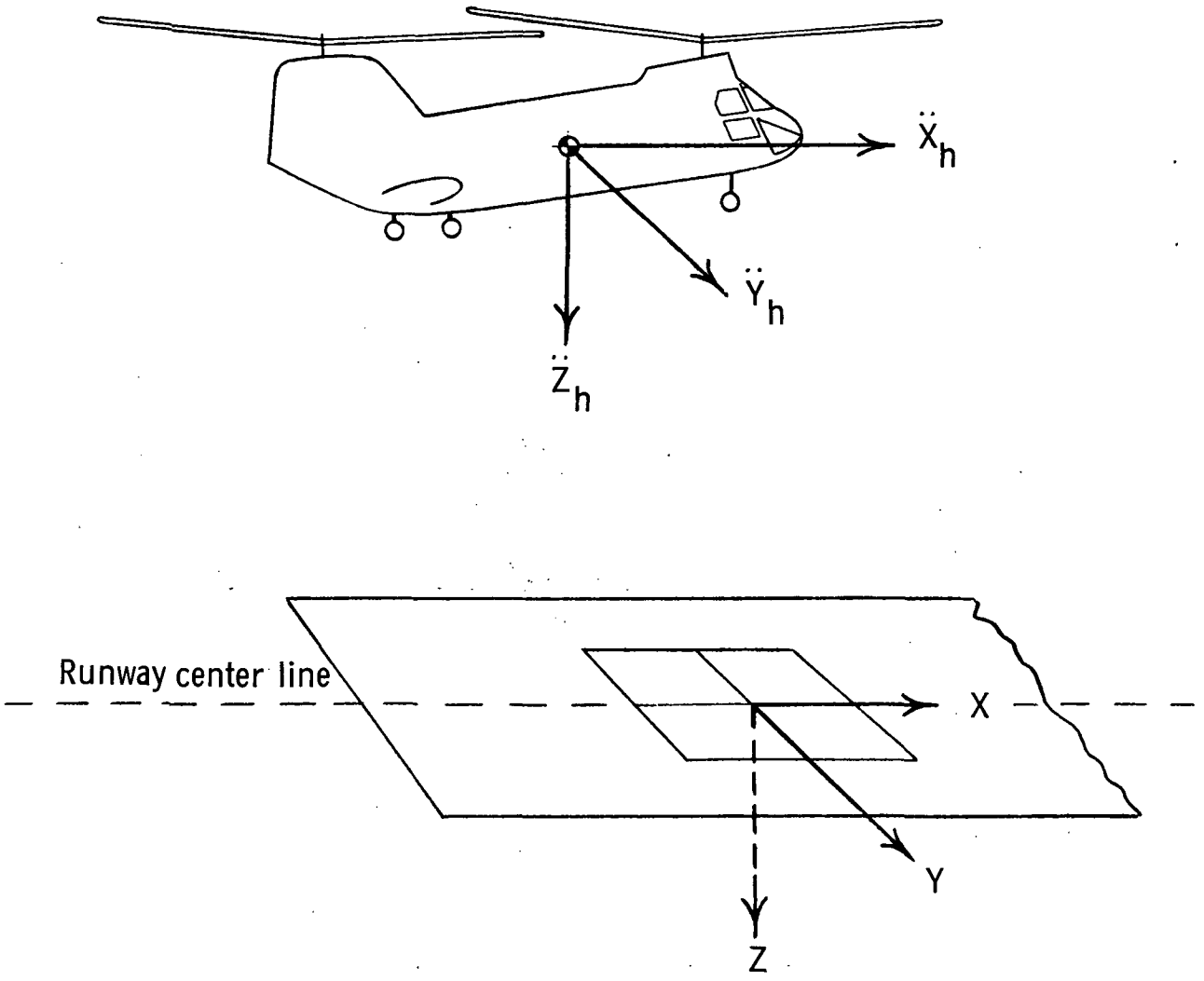

Figure 3.- Aircraft and runway reference coordinate frames.

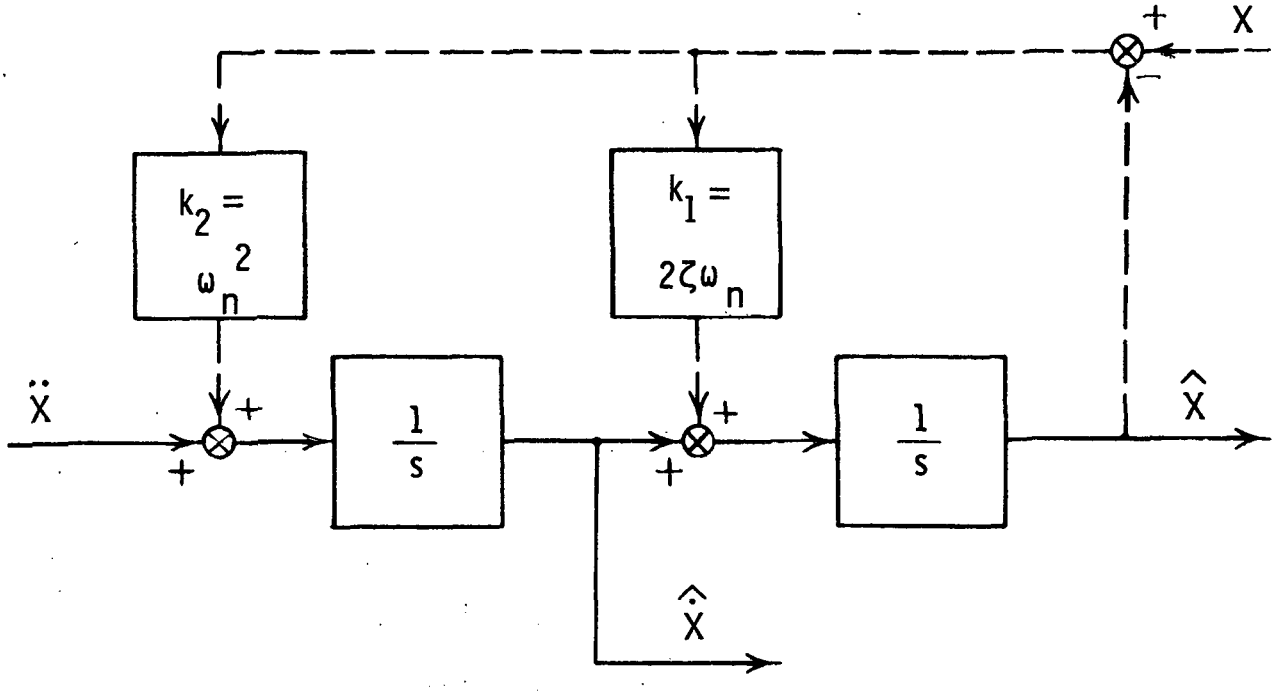

Figure 4.- Inertial smoothing mix filter.

L-68-9362

Figure 5.- Research helicopter.

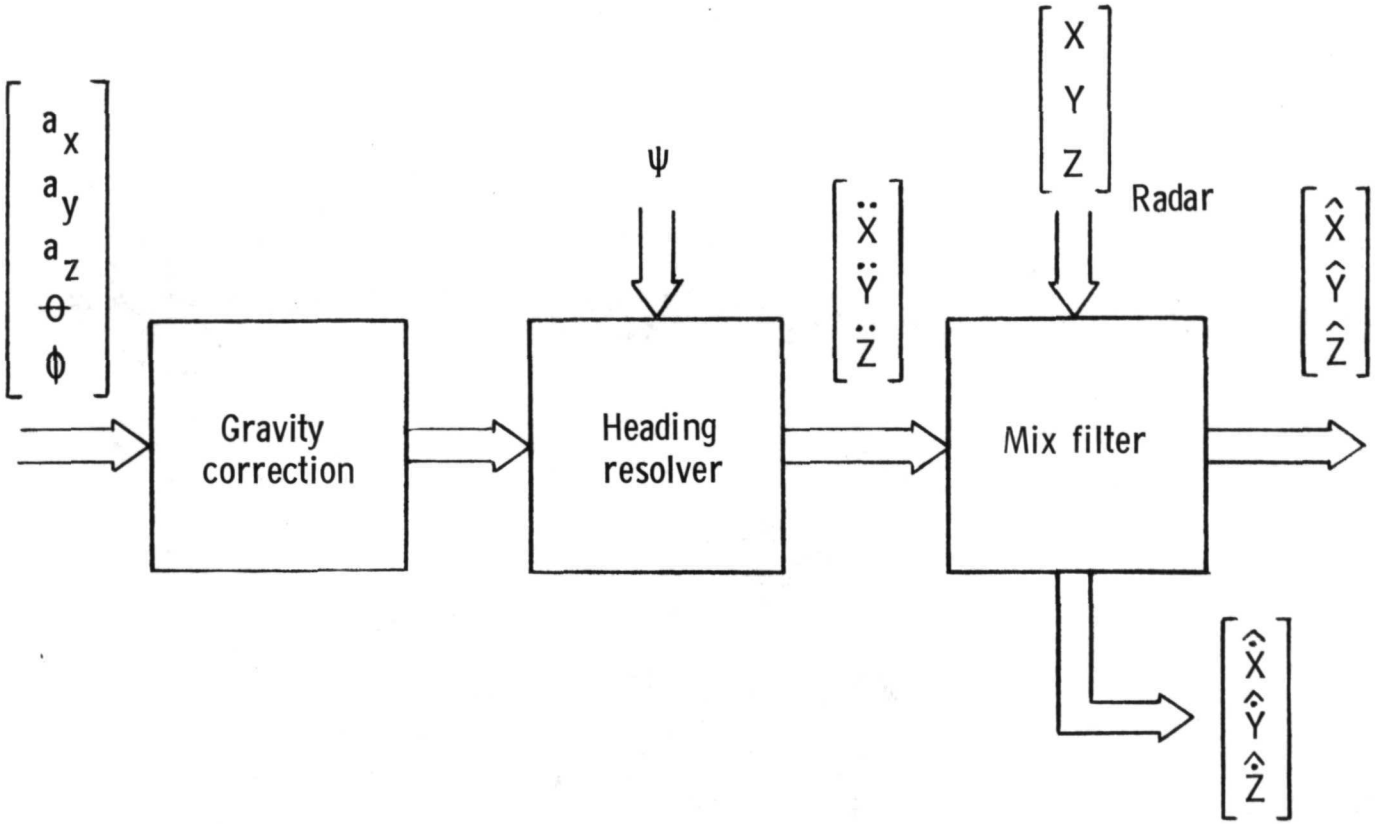

Figure 6.- General arrangement of inertial smoothing system.

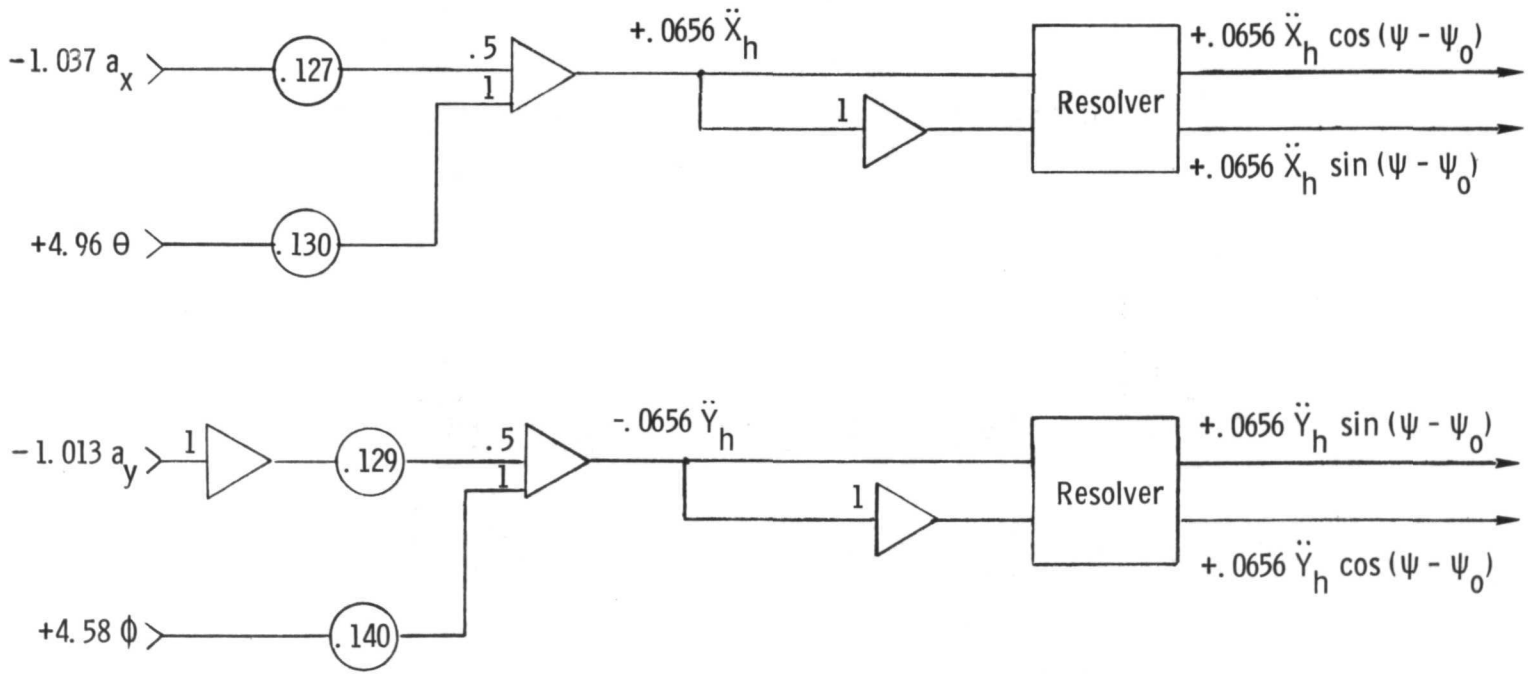

(a) Gravity correction and heading resolver.

Figure 7.- Analog computer schematic for inertial smoothing system. Where a signal value is expressed, the number preceding the symbol indicates the scale factor, in volts per SI Unit.

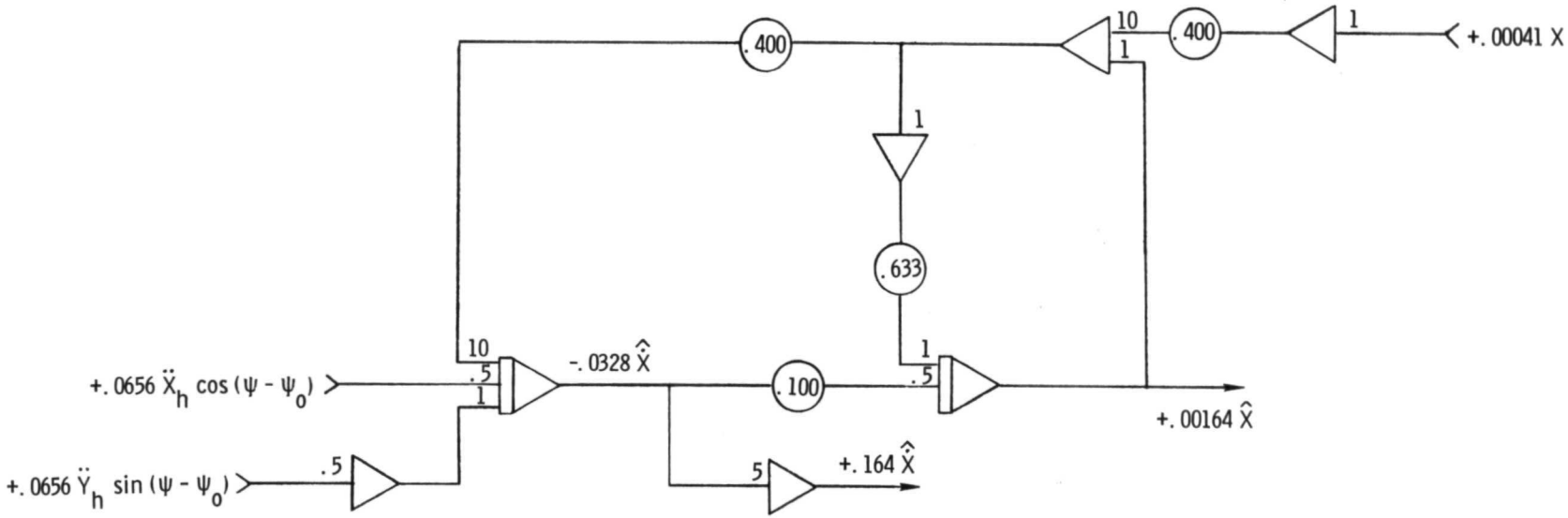

(b) Mix filter for X-axis.

Figure 7.- Continued.

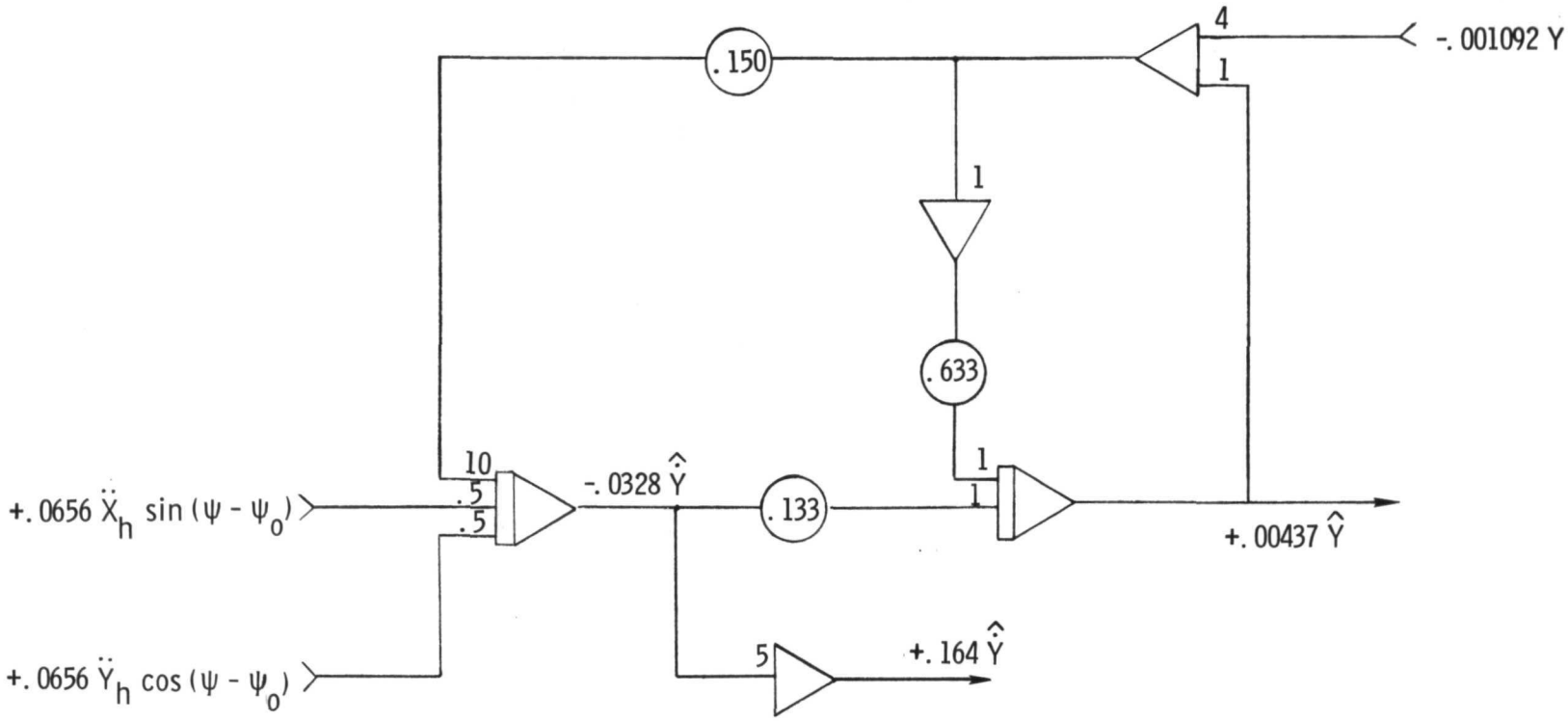

(c) Mix filter for Y-axis.

Figure 7.- Continued.

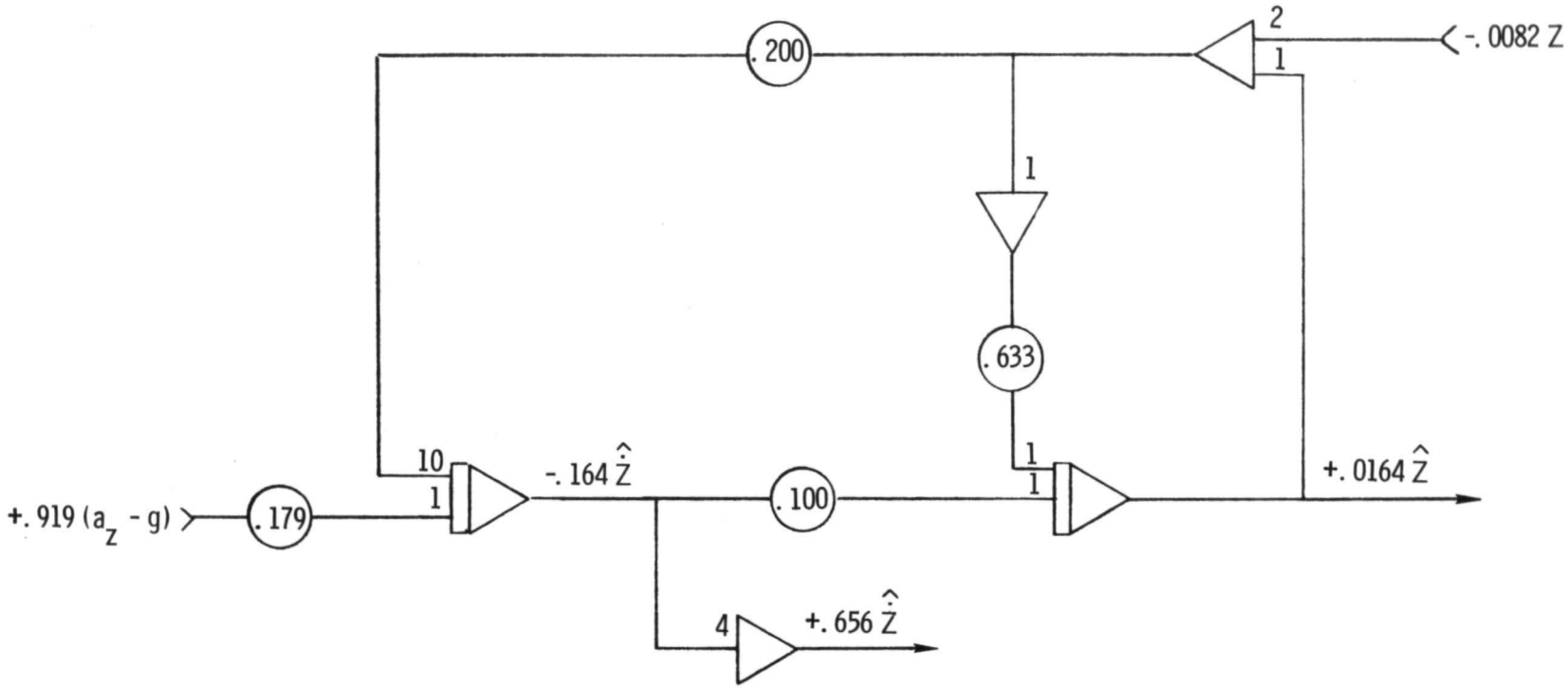

(d) Mix filter for Z-axis.

Figure 7.- Concluded.

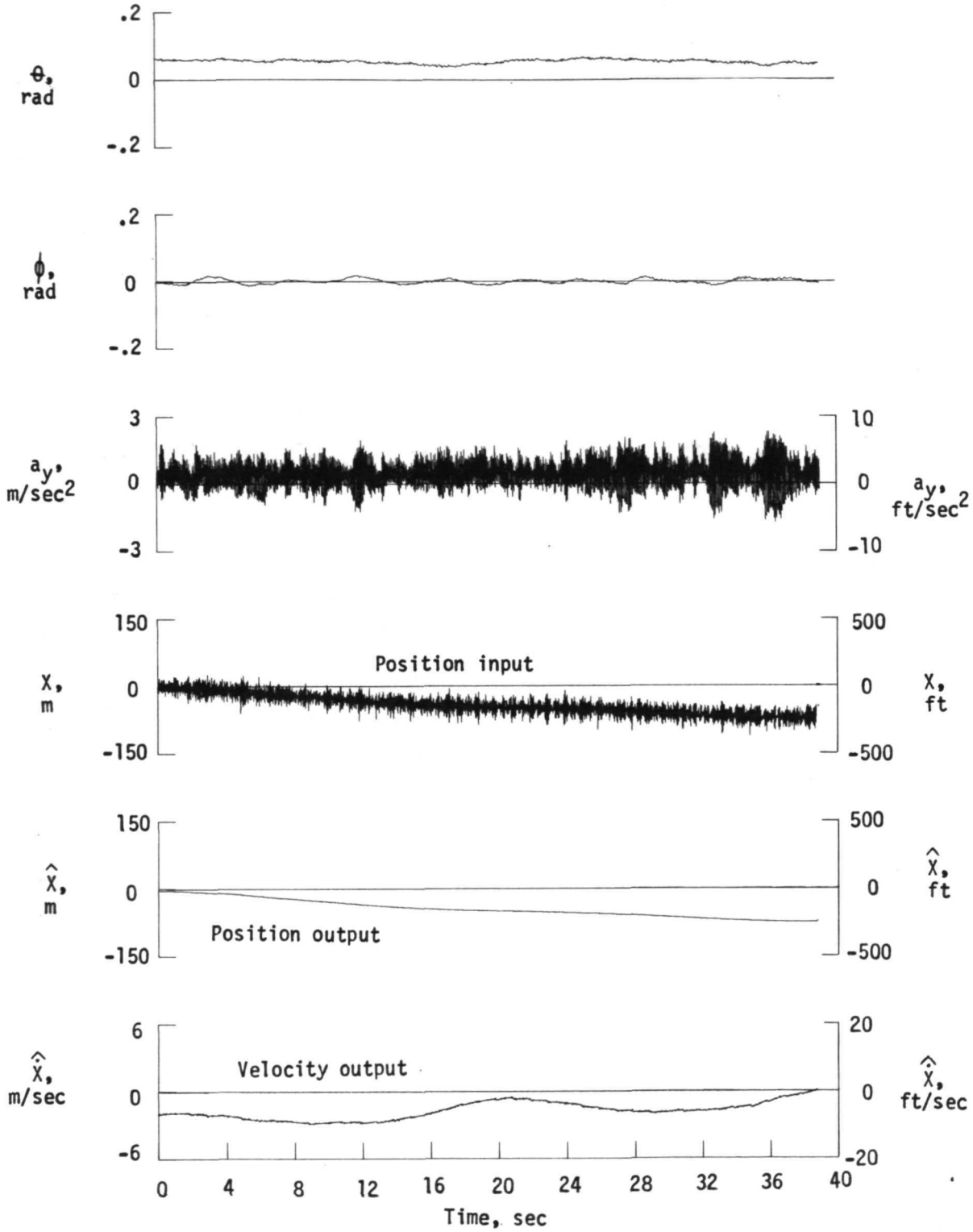

Figure 8.- Inertial smoothing system input and output signal noise characteristics X. (Note that a_x is not recorded.)

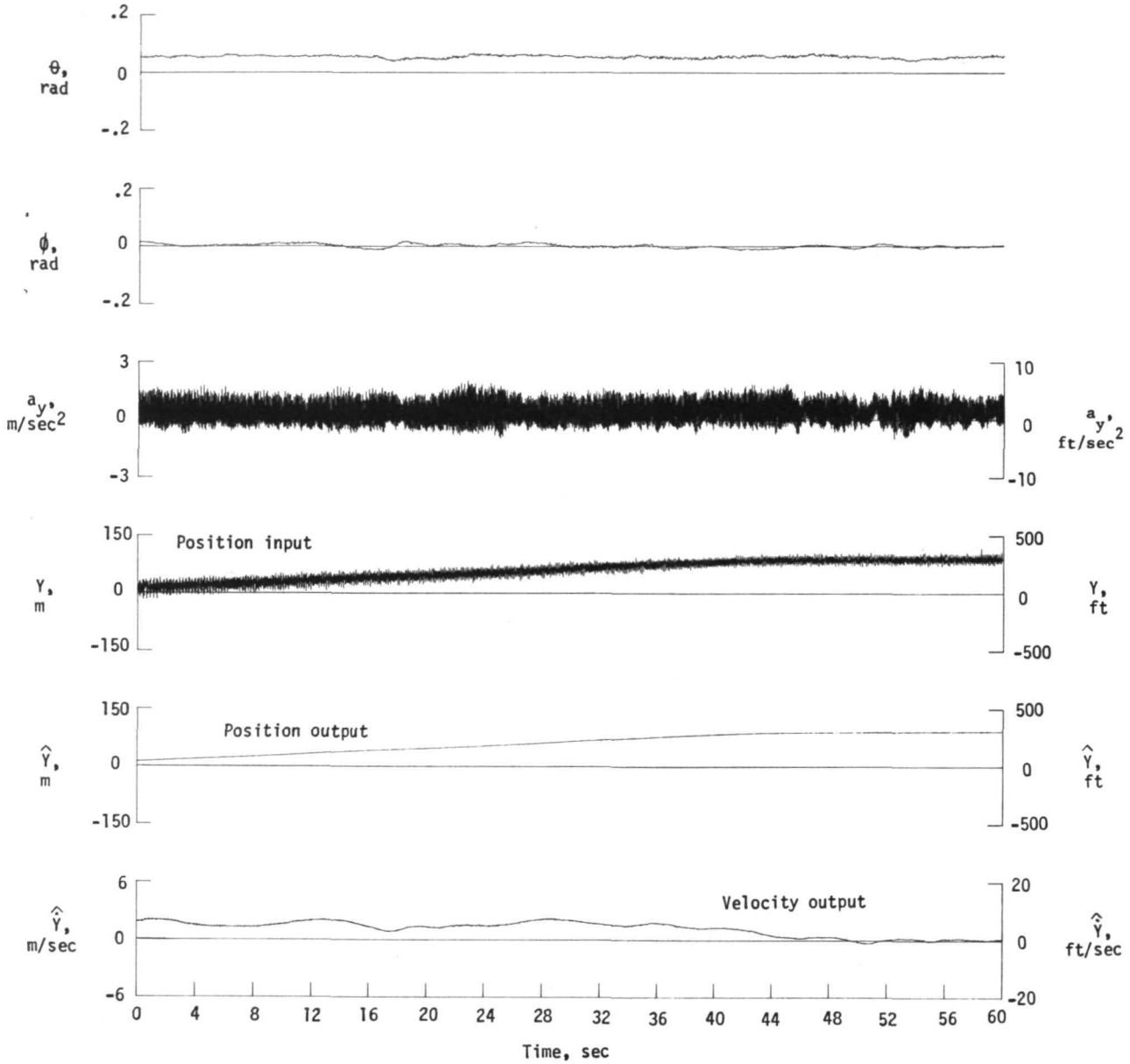

Figure 9.- Inertial smoothing system input and output signal noise characteristics Y. (Note that a_x is not recorded.)

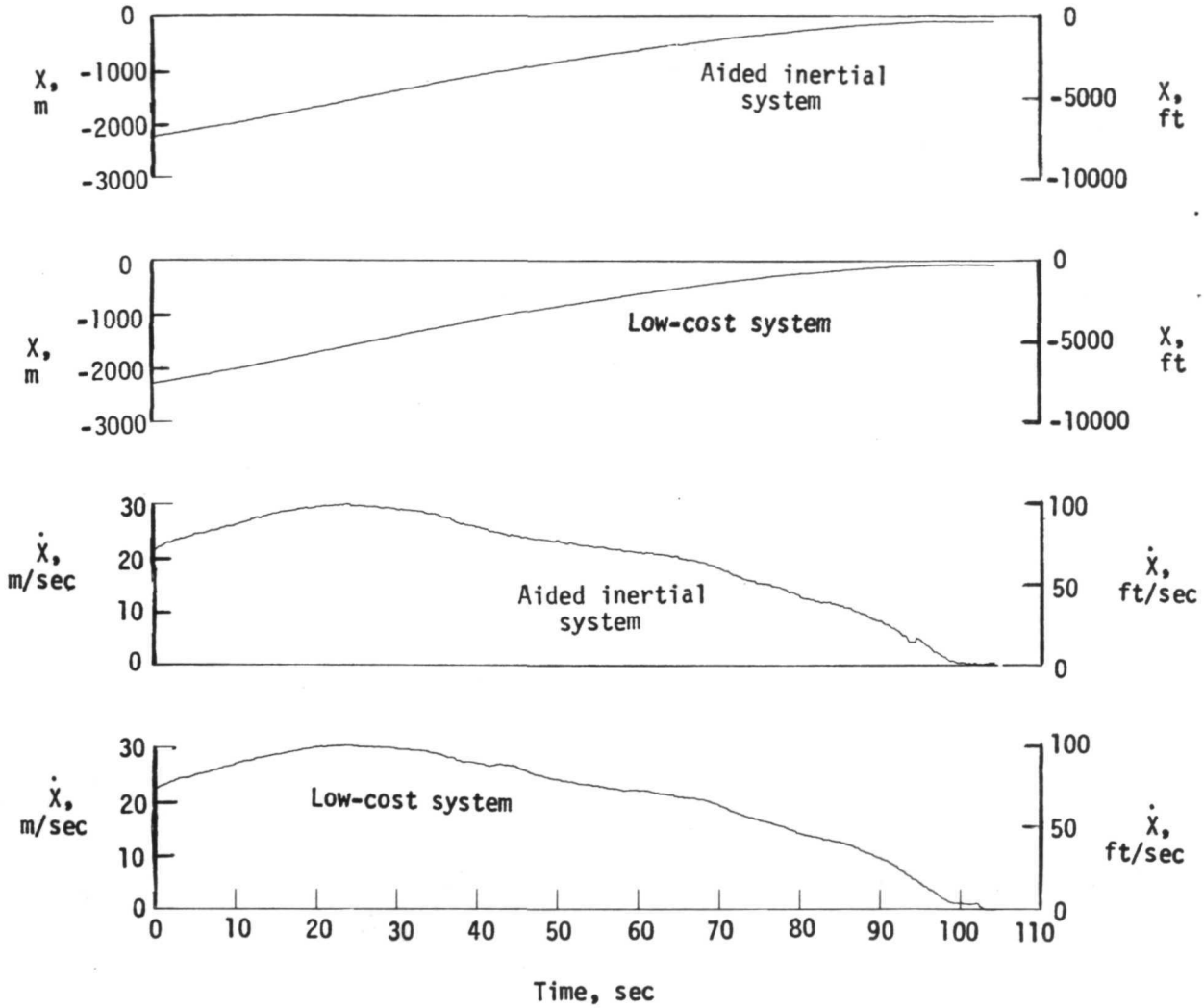

Figure 10.- Comparison of low-cost inertial smoothing system and an aided inertial navigation system. Decelerating approach.

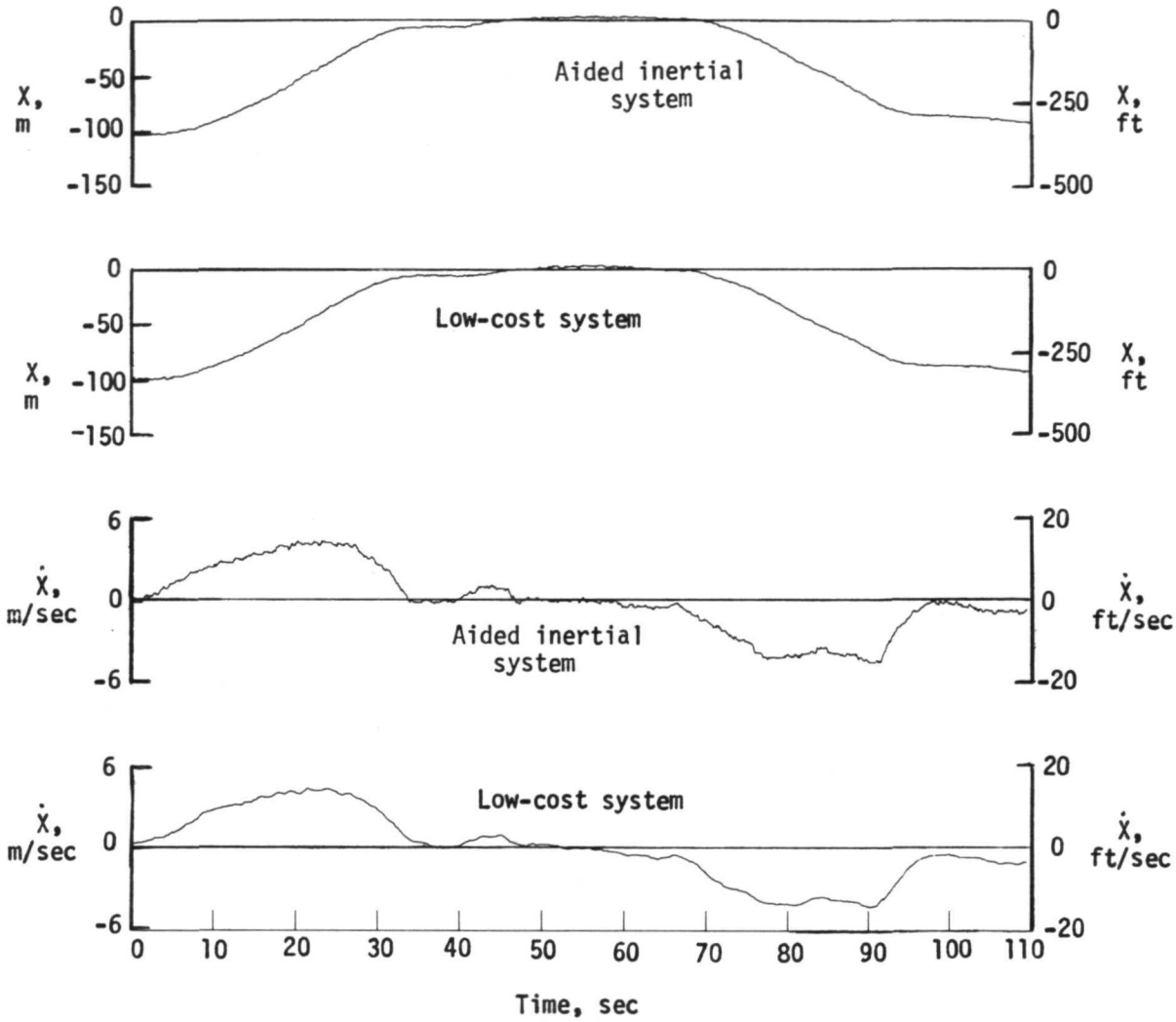

Figure 11.- Comparison of low-cost inertial smoothing system and an aided inertial navigation system. Hovering flight.

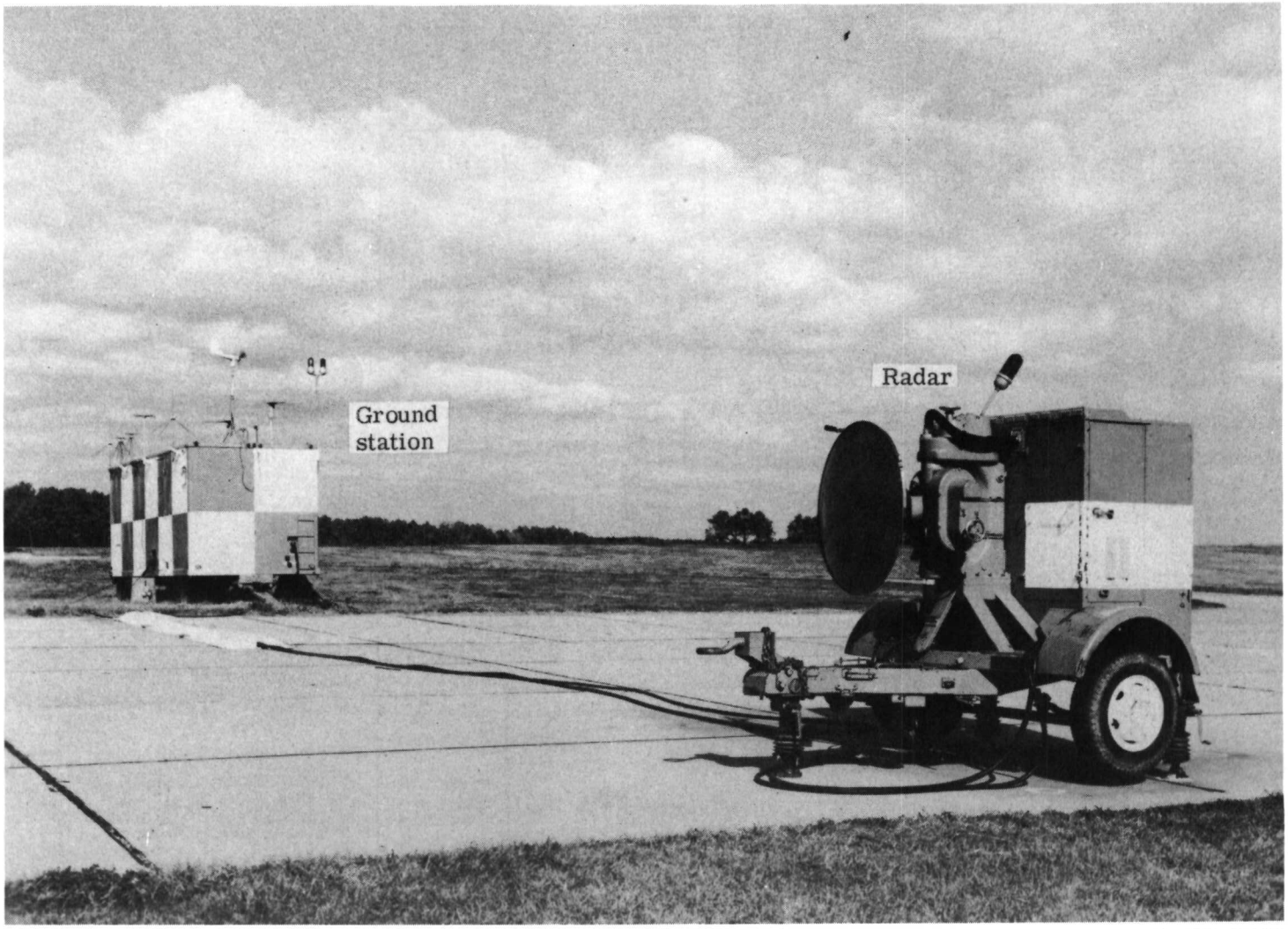

L-73-3043

Figure 12.- GSN-5 precision-tracking radar facility.

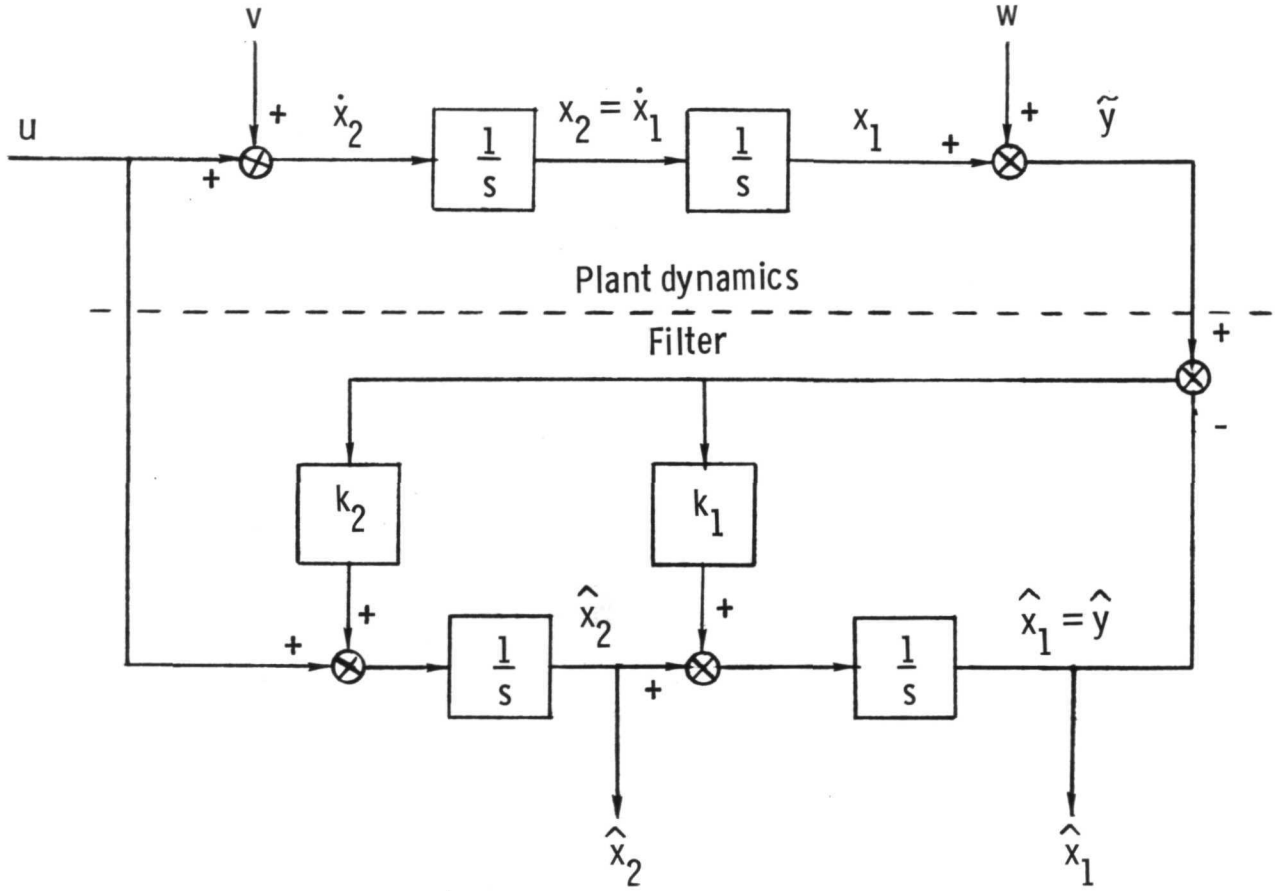

Figure 13.- State-variable representation of inertial smoothing mix-filter problem.

NASA-Langley, 1973 —— 21 L-8763

NATIONAL AERONAUTICS AND SPACE ADMINISTRATION
WASHINGTON, D.C. 20546

OFFICIAL BUSINESS
PENALTY FOR PRIVATE USE $300

SPECIAL FOURTH-CLASS RATE
BOOK

POSTAGE AND FEES PAID
NATIONAL AERONAUTICS AND
SPACE ADMINISTRATION
451

U.S.MAIL

POSTMASTER: If Undeliverable (Section 158 Postal Manual) Do Not Return

"The aeronautical and space activities of the United States shall be conducted so as to contribute . . . to the expansion of human knowledge of phenomena in the atmosphere and space. The Administration shall provide for the widest practicable and appropriate dissemination of information concerning its activities and the results thereof."

—NATIONAL AERONAUTICS AND SPACE ACT OF 1958

NASA SCIENTIFIC AND TECHNICAL PUBLICATIONS

TECHNICAL REPORTS: Scientific and technical information considered important, complete, and a lasting contribution to existing knowledge.

TECHNICAL NOTES: Information less broad in scope but nevertheless of importance as a contribution to existing knowledge.

TECHNICAL MEMORANDUMS: Information receiving limited distribution because of preliminary data, security classification, or other reasons. Also includes conference proceedings with either limited or unlimited distribution.

CONTRACTOR REPORTS: Scientific and technical information generated under a NASA contract or grant and considered an important contribution to existing knowledge.

TECHNICAL TRANSLATIONS: Information published in a foreign language considered to merit NASA distribution in English.

SPECIAL PUBLICATIONS: Information derived from or of value to NASA activities. Publications include final reports of major projects, monographs, data compilations, handbooks, sourcebooks, and special bibliographies.

TECHNOLOGY UTILIZATION PUBLICATIONS: Information on technology used by NASA that may be of particular interest in commercial and other non-aerospace applications. Publications include Tech Briefs, Technology Utilization Reports and Technology Surveys.

Details on the availability of these publications may be obtained from:

SCIENTIFIC AND TECHNICAL INFORMATION OFFICE

NATIONAL AERONAUTICS AND SPACE ADMINISTRATION

Washington, D.C. 20546