N73 25477

NASA TECHNICAL MEMORANDUM

NASA TM X-68251

NASA TM X-68251

CASE FILE COPY

HEAT CONDUCTION ERRORS AND TIME LAG IN CRYOGENIC THERMOMETER INSTALLATIONS

by I. Warshawsky
Lewis Research Center
Cleveland, Ohio

TECHNICAL PAPER proposed for presentation at
National Conference and Exhibit of the
Instrument Society of America
Houston, Texas, October 15-18, 1973

HEAT CONDUCTION ERRORS AND TIME LAG IN CRYOGENIC THERMOMETER INSTALLATIONS

I. Warshawsky
NASA Lewis Research Center, Cleveland, Ohio

E-7515

ABSTRACT

Installation practices are recommended that will increase rate of heat exchange between the thermometric sensing element and the cryogenic fluid and that will reduce the rate of undesired heat transfer to higher-temperature objects. Formulas and numerical data are given that help to estimate the magnitude of heat-conduction errors and of time lag in response.

INTRODUCTION

There are instances in cryogenic engineering where high accuracy is required in temperature measurement or where thermometric time lag must be estimated. An example of the need for accuracy occurs in the measurement of fluid density. An effective way of determining the density of a monomolecular cryogenic liquid, like hydrogen, nitrogen, oxygen, or methane, is to measure its pressure and temperature. Pressure measurement is rarely a problem because liquid density is only a weak function of pressure if one is well away from the critical point. However, the density of a cryogenic liquid depends strongly on its temperature. The following table shows the temperature accuracy required to determine within 0.1 percent the density of four liquids at their normal (1-bar) boiling points.

Liquid	H_2	N_2	O_2	CH_4
δT for 0.1% error in ρ, K	0.06	0.2	0.2	0.3

In the case of gases, less than 0.1 percent error in absolute pressure and temperature can be tolerated if no more than 0.1 percent inaccuracy in density is to be achieved.

When a complex automatic control system is being designed, allowance must be made for the lag in response of the thermometer. Making this lag negligible may be precluded by the need for mechanical ruggedness and reliability. Nor is zero lag always desirable. When a high-speed sampled data system is used with a fluid whose temperature may fluctuate randomly, too fast a response may prove dangerous; integration over an appreciable part of the time between samplings may actually improve accuracy and control stability.

This paper is directed only to a narrow range of situations; namely, those where the fluid exists in a single phase, and where the thermometer bulb temperature is near to the fluid temperature. These are the situations where high accuracy is most likely to be of major interest. Response time when there is nucleate boiling, as when a warm thermometer bulb is plunged into a liquid, has been well illustrated by Miller and Flynn[1].

The specific problems to be treated are (1) to determine what is required to keep the error in steady-state temperature measurement less than an arbitrarily-prescribed amount and (2) to estimate the lag in response to temperature changes occurring under prescribed conditions. The first problem arises because there is an undesirable flow of heat to the thermometer from higher-temperature sources, at the same time that there is a transfer of heat between thermometer and fluid; the equilibrium temperature reached and indicated by the thermometer is the result of the balance between these two rates of heat transfer. The second problem arises because the heat capacity of the thermometer prevents its instantaneous response to changes in fluid temperature. The rate of response depends on the balance between the rate at which heat can be stored in the thermometer and the rate at which heat can be transferred between the thermometer and the fluid. Thus, both steady-state error and time lag can be reduced by improving the rate of heat transfer between fluid and thermometer and reducing the rate of conduction of heat from the ambient atmosphere to the thermometer. This paper first treats briefly the mechanical configurations that would help achieve this goal; next, the quantitative magnitude of steady-state error is estimated in those situations that are amenable to simple analysis; finally, the time lag is estimated in similar situations.

The heat transfer computations to be made are based on the data presented in classical texts[2],[3] on heat transfer which summarize and collate the work of many experimenters. The heat transfer computations may easily be in error by 30 percent, not because of comparable uncertainty in the original data, but because the premises on which the original

[1]Superior numbers refer to similarly-numbered references at the end of this paper.

data were based are not fully met by the practical situation. Some additional factors that influence a practical situation are free-stream turbulence, distortion of the velocity profile by end effects and pipe wall interference, and deviation of actual thermometer design from the assumed, idealized thermometer model. The uncertainties in computed results are not serious if they err on the conservative side, because they permit realization of the goal described as problem (1), to yield an error less than a prescribed amount. Furthermore, a 30 percent error in an error that itself is only of the order of a few percent is indeed nonsignificant. Appreciable errors in dynamical quantities like time constant and time lag also are usually acceptable, and cause negligible reduction in utility. Consequently, the use of two or three significant figures in some of the formulas presented herein is often for convenience of computation, and does not necessarily imply a commensurate accuracy.

INSTALLATION PRACTICES

Desirable installation practices are those which expose maximum length of the thermometer bulb and its support to the fluid, and produce the longest possible path for heat conduction from the atmosphere. The need for adequate mechanical strength and vibration resistance is an important constraint. The detailed design can be left to the ingenuity of the engineer, but Fig. 1 illustrates some approaches. The sketches are conceptual and not necessarily to scale. The shaded portion of the thermometer bulb represents the temperature-sensitive portion. The design of Fig. 1(a) is satisfactory only if the pipe wall is at the same temperature as the fluid, and both pipe wall and thermometer head are very well insulated. Figures 1(b), (c), and (d) show improvements which involve no change in direction of the fluid. Figures 1(e) and (f) show designs applicable to locations where there is a change in fluid direction.

Conduction along the wire leads can be obviated by the technique shown in Fig. 2. The leads are wrapped around the outside of the pipe for a distance of at least 100 wire diameters before they are led to the outside atmosphere. If cementing is inconvenient, kraft-paper-backed pressure-sensitive adhesive tape may be used to hold the wires firmly against the pipe, provided the tape is applied at room temperature to a clean, dry pipe surface. (Plastic-backed tape may not be used.) The tape should not be handled when it is cold. If the wires have no covering other than enamel, a single layer of thin writing paper may be used between wires and pipe to improve electrical insulation.

If the pipe is vacuum jacketed, the thermometer head should not be in contact with the outer pipe jacket that contains the vacuum. The outer pipe should hold only a cover plate that permits access to the thermometer, and the necessary electrical terminals. This type of construction also accommodates relative longitudinal motion between the pipes. Wires to the electrical terminals should be routed from the thermometer bulb in the manner shown in Fig. 2.

If there is doubt about the temperature of the thermometer head, an auxiliary thermometer may be attached to the head. A thermocouple is adequate for this purpose, and usually is more convenient to install than a resistance thermometer.

An installation in a storage tank, where heat transfer is principally by natural convection, requires that the support for the sensitive portion of the thermometer be exceptionally long, with much of it exposed to the cryogenic fluid. Some conceptual designs are shown in Fig. 3. Because of stratification, accuracy of local temperature measurement may require that the thermometer bulb and part of the stem lie in a horizontal plane; the stem may be curved in order to increase the length exposed to the fluid (Fig. 3(a)). In another design, the temperature-sensitive element may take the form of a bare-wire thermocouple or resistance wire supported from two prongs of low thermal conductance (Figs. 3(b) and (c)).

PRINCIPAL SYMBOLS

The following symbols are used in the subsequent portion of this paper.

b	bulb wall thickness
c_1	specific heat of sensing element
c_2	specific heat of bulb wall
c_f	specific heat of fluid
D	bulb diameter
d	wire diameter
F	factor, Eq. (19)
g	local acceleration of gravity
h	heat transfer coefficient
K_1, K_2, K_3, K_4	thermal conductance
k_f	thermal conductivity of fluid
k_m	thermal conductivity of metal
$\bar{k}_{m3}, \bar{k}_{m4}, \bar{k}_s$	average thermal conductivity
L_1, L_2, L_3, L_4	length
m_1	mass of sensing element
m_2	mass of bulb wall
N_{Gr}	Grashof number, $D^3 g\beta\rho^2 \cdot \delta T/\mu^2$
N_{Nu}	Nusselt number, hD/k_f
N_{Pr}	Prandtl number, $c_f\mu/k_f$
N_{Re}	Reynolds number, uD/ν
P	electric power input
T	sensing element temperature
T_a, T_b	heat source temperatures
T_f	fluid temperature
T_w	bulb wall temperature
δT	temperature error
t	time
u	linear fluid speed
X	$N_{Gr}N_{Pr}$
x	distance
β	coefficient of volumetric expansion
ϵ	natural base of logarithms
η	conductance parameter, Eq. (4)
μ	viscosity
ν	kinematic viscosity

ρ fluid density
τ_e external time constant
τ_i internal time constant
ψ conductance correction factor

THERMOMETER MODEL

Terms. The subsequent analysis will make use of the concepts of thermal capacity and thermal conductance. The thermal capacity of an object is a measure of its ability to store heat. It is equal to the product of the mass of the object by its specific heat; its dimensions are energy per unit temperature difference. The thermal conductance of an object or medium is a measure of its ability to transmit heat. A slab of material of thermal conductivity k, cross sectional area A, and length L has a longitudinal thermal conductance kA/L. Thermal conductance is thus analogous to the electrical conductance of a resistor, and it will be symbolized by a resistor in the diagram of heat flow. The dimensions of thermal conductance are power per unit temperature difference.

Mechanical model. Figure 4 shows the generalized model that will be assumed for the thermometer and its installation. Specific deviations from this model will be discussed as the need arises. The "sensing element" is the resistance-thermometer wire or the thermocouple junction that is responsive to temperature. The bulb is assumed to be a thin-walled, closed-end metallic tube whose thermal conductance in a radial direction is substantially infinite. The exchange of heat between sensing element and bulb wall is assumed to take place through a medium, shown shaded, which has a thermal conductance K_1. This exchange of heat is assumed to take place principally over the length L_1. However, a greater length L_2 of the bulb is exposed to the moving fluid whose temperature T_f is desired. The thermal conductance between bulb wall and fluid is K_2; it may be thought of as the thermal conductance of the fluid boundary layer around the bulb. The total length of bulb, from bulb tip to head, is L_3. The length $L_3 - L_2$ lies in stagnant fluid and will conservatively be assumed to exchange negligible heat with the surrounding fluid. The temperature of the thermometer head is T_a. However, the leads from the sensing element are assumed to terminate at a source whose temperature is T_b. Temperature T_b may be room temperature if a construction like that of Fig. 2 is not feasible, but it will probably be close to T_a, or lower, if the construction of Fig. 2 can be used effectively.

Lumped-element circuit model. A simplified diagram of the heat flow is shown in Fig. 5. The sensing element, at temperature T, exchanges heat with the bulb wall, at temperature T_w, through a medium of conductance K_1. Longitudinal flow of heat along the bulb wall occurs through conductance K_4. Flow of heat to the sensing element, along the connecting wires, is through conductance K_3. Sensing element heat capacity is m_1c_1; bulb wall heat capacity is m_2c_2. The heat capacities of the media whose conductance is K_1, K_3, or K_4 are assumed zero, or to have been apportioned among sensing element, bulb, and thermometer head, in order to maintain the lumped-element model of Fig. 5. Heat capacities enter only into the computation of time lag, and not into the computation of steady-state errors. Electrical power delivered to the sensing element, when the latter is a resistance thermometer, is denoted by P.

Distributed-element considerations. The lumped-element model works well with respect to all components except the portion of the bulb wall over the distance L_2. The bulb wall temperature $T_w(x)$ varies significantly over the distance $0 \leq x \leq L_2$, so that some decision must be made on the definition of T_w in Fig. 5, if the convenience of Fig. 5 is to be utilized. The arbitrary decision we shall make is that T_w in Fig. 5 shall be the value of $T_w(L_1)$ as computed by more rigorous analysis. This decision is conservative, because the effective value of T_w is likely to lie closer to the desired fluid temperature T_f. The concomitant specification of K_4 will be discussed in the next section.

STEADY-STATE ACCURACY

In the steady state, if $K_3 \ll K_1$, $(K_3 + K_4) \ll K_2$, the temperature indication is

$$T = T_f + \left\{ \left[(T_b - T_f)K_3 + P \right] \left(\frac{1}{K_1} + \frac{1}{K_2} \right) + (T_a - T_f) \frac{K_4}{K_2} \right\} \quad (1)$$

The condition for adequate accuracy is that the quantity in the braces shall be less than the maximum error in temperature measurement that can be tolerated. The term proportional to P is the "self-heating error."

It remains to estimate K_1, K_2, K_3, and K_4. These will depend on properties of the fluid and of materials of construction. Table I lists some pertinent properties of four cryogenic liquids at their 1-atmosphere boiling points, and of water at 300 K for reference. Table II lists the thermal conductivities of some solids at various temperatures. These data will be found useful for numerical calculations. They have been taken from Scott[4], the WADD Compendium[5], and the AIP handbook[6].

Estimation of K_1. In general, the value of K_1 cannot be easily estimated, since it is an internal constructional characteristic of the thermometer. An experimental determination may be necessary; a possible technique will be described in the discussion of time lag. In some special cases, however, an estimation of K_1 is possible:

K_1 may be taken as infinite in the following cases:

(1) a bare-wire thermocouple, without enclosing bulb;
(2) a thermocouple grounded to the tip of the bulb;
(3) a resistance-thermometer element, without enclosing bulb, in which bare or enameled wires are in direct contact with the fluid.

If the wires of the sensing element are covered by a layer of glass or ceramic, which, in turn, is in intimate contact with the fluid or with the inner wall of the enclosing bulb, the value of K_1 may be approximated by $\pi d_c L_c k_c / b_c$ where d_c and L_c are the respective diameter and length of the glass- or ceramic-covered assembly, and k_c and b_c are, respectively, the thermal conductivity and radial thickness of the ceramic.

Estimation of K_2. A conservative representation of K_2 is $\pi D h L_1$ where h is the fluid heat transfer coefficient; it is expressible in terms of the Nusselt number as

$$h = k_f N_{Nu} / D \tag{2}$$

Estimation of K_3. The thermal conductance of each wire lead is $\pi d^2 \bar{k}_{m3} / 4L_4$ where L_4 is the length to the point where T_b occurs and $\bar{k}_{m3}$ is the average thermal conductivity over the range T_f to T_b. Reference (5) lists values of the thermal conductivity integral $\bar{k}_{m3}(T_b - T_f)$ for various materials. For No. 30 B&S Gage wires 10 cm long, with $T_b = 300$ K, $T_f = 90$ K, the value of $K_3(T_b - T_f)$, in watts, is 0.042 and 0.0018 for copper and manganin, respectively.

An alternative computation of K_3 would replace L_4 by L_3, and T_b by T_a, on the assumption that the temperature of the thermometer head was communicated to the wires at the point where they pass through the gas tight insulation. Conservatively, one would use whichever method gave the larger temperature error.

If the sensing element is supported by an axial strut anchored at the thermometer head, the temperature error due to lead conductance must be augmented by the error due to strut conductance. This error is $(T_a - T_f)\bar{k}_s A_s / L_3$ where A_s is the cross sectional area of the support and $\bar{k}_s$ its average thermal conductivity over the interval T_f to T_a. Reference (5) lists the thermal conductivity integral for several plastics and ceramics.

Estimation of K_4. The thermal conductance of the bulb wall over the distance $L_3 - L_2$ may be taken as $\pi D b \bar{k}_{m4} / (L_3 - L_2)$ where b is wall thickness and $\bar{k}_{m4}$ is the average conductivity over the interval T_f to T_a. Reference (5) lists the value of $(T_a - T_f)\bar{k}_{m4}$ for various metals. This computation of K_4 is conservative, because it neglects the favorable effect of radial heat conduction through the liquid between the bulb wall and the extension tube.

The thermal conductance of the bulb wall over the distance L_2 cannot be stated so simply. Because of the interrelationship between boundary-layer heat transfer and axially-directed conduction, it is more accurate to discuss the value of the ratio K_4/K_2 that occurs in Eq. (1).

Estimation of K_4/K_2. This ratio must be determined by solving the differential equation of balance between radially-directed convection and axially-directed conduction. To make the problem tractable, it will be assumed that $K_1 = 0$. Later, the correction for the presence of K_1 will be indicated. The heat-balance equation is

$$\frac{1}{\eta^2} \cdot \frac{d^2 T_w}{dx^2} = T_w - T_f \tag{3}$$

where

$$\eta^2 = \frac{h}{k_{m4} b} = \frac{k_f}{k_{m4}} \cdot \frac{N_{Nu}}{Db} \tag{4}$$

For $0 \le x \le L_2$, the solution of Eq. (3) is

$$T_w = T_f + (T_a - T_f)\psi \tag{5}$$

where

$$\psi = \cosh \eta x \; / \; [\cosh \eta L_2 + \eta (L_3 - L_2) \sinh \eta L_2]. \tag{6}$$

For $\eta L_2 > 4$,

$$\psi \approx [1 + \eta (L_3 - L_2)]^{-1} \cosh \eta x \; / \; \cosh \eta L_2 . \tag{7}$$

The quantity $(T_a - T_f)\psi$ in Eq. (5) represents the amount by which bulb wall temperature T_w differs from the desired fluid temperature T_f. The difference increases as x increases. If we assume that we are interested in T_w only over the distance $0 \le x \le L_1$ then the maximum difference occurs when $x = L_1$, at which point

$$\psi = \psi(L_1) \equiv \psi_1 \tag{8}$$

Comparison of Eqs. (1) and (5) leads to the conclusion that taking

$$K_4 / K_2 = \psi_1 \tag{9}$$

would provide a conservative estimate of the error due to K_4. [A more exact computation leads to the fact that, if $1 \le \eta L_1 \le 10$, then $\psi(0.75\, L_1)$ would be a more accurate choice than $\psi(L_1)$, but the more conservative formula of Eq. (9) appears simpler and more desirable.]

To correct for the presence of K_1, it would be necessary to multiply the right-hand side of Eq. (4) by $1 + K_1/K_2$. This complication is usually not worthwhile, since its neglect makes the estimate of K_4/K_2 more conservative (i.e., larger in value).

Table III lists values of $1/\psi_1$ for various combinations of L_1/L_2, L_3/L_2, and ηL_2. Linear interpolation between rows is adequate, but logarithmic interpolation is required between columns. For example, if $L_1/L_2 = 0.90$, $L_3/L_2 = 2$, $\eta L_2 = 6$, then the value of $1/\psi_1$ is

$$\text{antilog}\left[\frac{1.0 - 0.9}{1.0 - 0.75} (\log 31.4 - \log 7) + \log 7\right]$$

The reciprocal of ψ_1 has been tabulated in order to obviate negative logarithms in interpolation.

Table III indicates the desirability of having the length L_1 only a fraction of the length L_2 that is exposed to the fluid stream. Increases in the ratio L_3/L_2 also produce distinctive gains. The column for $L_1/L_2 = 0$ represents the case of a bare-wire thermocouple or of an enclosed thermocouple grounded to the tip of the bulb.

High values of ηL_2 are desirable. The means of achieving this goal are to make L_2 large and Db small, and to keep k_{m4} small by using a bulb material like austenitic stainless steel.

Nusselt number determination. The value of N_{Nu} to be used in Eq. (4) will be determined by the conditions of the fluid. The following information is derived from the extensive reviews provided by McAdams[2] and Jakob[3].

(1) For fluids flowing transversely to cylinders,

$$N_{Nu} = 0.95\, N_{Pr}^{1/3}\, N_{Re}^{0.31+0.037 \log N_{Re}} \qquad (10a)$$

$$(0.1 \le N_{Re} \le 200\,000)$$

or

$$N_{Nu} = 0.32 + 0.48\, N_{Pr}^{1/3}\, N_{Re}^{0.52} \qquad (10b)$$

$$(0.1 \le N_{Re} \le 1000)$$

$$N_{Nu} = 0.27\, N_{Pr}^{1/3}\, N_{Re}^{0.60} \qquad (10c)$$

$$(1000 \le N_{Re} \le 50\,000)$$

Equation (10a) is useful when N_{Re} is known and N_{Nu} is to be determined. Equations (10b) and (10c) are useful in the reverse situation.

Figure 6 gives values of the dimensional quantity

$$N_{Nu} k_f / k_{m4} \equiv \eta^2 Db$$

as a function of the quantity Du, for several cryogenic liquids at their 1-atmosphere boiling points, and for water at 300 K, on the assumption that k_{m4} is that of austenitic stainless steel.

The normal sequence of computing the error due to K_4 would be to compute, in turn, N_{Re}, N_{Nu} (Eq. (10)), η^2 (Eq. (4)), and ψ_1 (Eqs. (6) to (8)), and then to substitute the value of K_4/K_2 (Eq. (9)) into Eq. (1). However, where Fig. 6 can be used, η^2 is obtainable directly, without having to compute N_{Re} and N_{Nu}. Table III then yields the value of $\psi_1 = K_4/K_2$, without having to use Eqs. (6) to (8). Thus, one may proceed from Fig. 6 to Table III to Eq. (1).

(2) For fluids flowing parallel to a cylinder, the value of N_{Nu} in Eq. (10) and the ordinate in Fig. 6 should each be divided by 1.6.

(3) For natural-convection situations, with bulb horizontal, an iterative approximation of N_{Nu} is necessary. For an initially assumed temperature difference δT between bulb wall and fluid, one successively computes the product of Grashof and Prandtl numbers

$$X \equiv N_{Gr}\, N_{Pr} = (D^3 g \beta \rho^2 c \cdot \delta T)/(\mu k_f), \qquad (11)$$

the Nusselt number

$$N_{Nu} = 1.16\, X^{0.13+0.0091 \log X}, \qquad (12)$$

and the value of η^2 from Eq. (4). Table III then gives the value of

$$\frac{1}{\psi_1} = \frac{T_a - T_f}{\delta T} \qquad (13)$$

from which a new value of δT is obtained. The iterative process (Eqs. (11) to (13)) is repeated until the result becomes reasonably convergent or moderately oscillatory. For convenience in computing X, Table I lists the values of the dimensional quantity

$$g_0 \beta \rho^2 c_f / \mu k_f \equiv N_{Gr}\, N_{Pr}/(D^3 \cdot \delta T)$$

for several liquids at their 1-atmosphere boiling points; g_0 is the standard acceleration of gravity.

(4) No definitive, generalized heat transfer data exist for the case where the thermometer bulb is protected by a perforated metallic tube that permits internal circulation of fluid. It is recommended that the temperature of the outer tube first be computed on the assumption that the fluid passes only over the outside of the tube; length L_1 is to be taken as the length of the inner bulb. Then, the temperature of the inner bulb is to be computed, assuming a fluid velocity that represents the best guess based on perforation size and internal flow impedance, and assuming a fluid temperature equal to the computed temperature of the outer tube.

(5) If boiling is anticipated at the surface of the thermometer bulb, the most conservative approach is to assume that the fluid is a gas possessing the temperature and linear velocity of the liquid, but the density and transport properties of the gas.

TIME LAG

Theory

Internal and external time constants. In many practical applications, the dynamic behavior of the thermometer model of Figs. 4 and 5 is conveniently described in terms of two parameters: an internal time constant τ_i and an external time constant τ_e. The internal time constant is an intrinsic property of the thermometer that can be listed with its other properties like dimensions, mass, and sensitivity. The external time constant is an extrinsic property that depends on the characteristics of the fluid stream as well as on some properties of the thermometer bulb. The reason why this subdivision into two parameters is possible is that (a) to a first and often adequate approximation, the temperature of the bulb wall constitutes the boundary condition for the solution of the differential equation of heat transfer between the bulb wall and the

sensing element, and (b) to a first and often adequate approximation, the bulb wall temperature will be determined principally by the balance between the rate of heat transfer between bulb and fluid and the rate of heat storage in the bulb wall. The experimental method of determining internal time constant, which will be described later on, provides a check on whether the two-time-constant model is a reasonable approximation.

The physical process of communication of temperature from the fluid to the sensing element may be described in the following way. Suppose that a small step change ΔT_f occurs in the fluid temperature T_f. The bulb, of mass m_2 and specific heat c_2, will respond like a first-order system with external time constant τ_e, in accordance with the equation

$$\tau_e(dT_w/dt) + T_w = T_f + \Delta T_f . \qquad (14)$$

If K_3 and K_4 are momentarily neglected to simplify this analysis, the value of τ_e is

$$\tau_e = m_2c_2/K_2 = m_2c_2/h\pi DL_1 , \qquad (15)$$

where m_2 is of the order of mass of the length L_1 of the bulb; consequently

$$\tau_e = \rho_2c_2b/h \qquad (16)$$

where ρ_2 is the density of the metal of the bulb. The response will be of exponential form, as shown in Fig. 7. This figure shows two ways of identifying τ_e: one as the time at which the excursion is 63 percent complete ($0.63 = 1 - \epsilon^{-1}$), the other as the time at which the tangent at the origin intercepts the asymptote.

The sensing element, within the bounding wall, responds to the exponential change in bulb wall temperature like a first-order system with internal time constant τ_i, in accordance with the equation

$$\tau_i(dT/dt) + T = T_w, \qquad (17)$$

where

$$\tau_i = m_1c_1/K \qquad (18)$$

The response, which represents the simultaneous solution of Eqs. (14) and (17), is of the form shown in Fig. 8. The distinctive difference between Figs. 7 and 8 is that, in the latter figure, the slope at the origin is zero, rather than a maximum. The slope in Fig. 8 does not reach a maximum until the lapse of a time that does not exceed $0.5(\tau_i + \tau_e)$. The tangent at the point of inflection intersects the asymptote at a time that is $\tau_i + \tau_e$ greater than the time at which the inflection occurred. The time at which 63 percent of the excursion is completed does not exceed $1.08(\tau_i + \tau_e)$, and the time at which 90 percent of the excursion is completed does not exceed $2(\tau_i + \tau_e)$.

If there had been no abrupt (step) change in T_f, but T_f were fluctuating mildly, the response T would lag behind T_f by an amount substantially equal to $\tau_i + \tau_e$.

Departures from the simplified model. The simple model presented heretofore permits estimation of time lags from two time constants: an internal one, τ_i, which may be determinable experimentally, and an external one, τ_e, which may be computed. The assumption on which this two-time-constant concept is based is tantamount to the assumption that $K_1 \ll K_2$. The quantitative data presented above, and the corresponding values of time lag that appear in Fig. 8, are rigorously applicable only to this condition. A rigorous solution applicable to all conditions would require replacement of τ_i as defined by Eq. (18) by the quantity $\tau_i(K_1 + K_2)/K_2$ in all the various expressions that appear in Fig. 8. The consequence of this more exact representation is that the quantity to replace τ_i ranges from τ_i where $K_1 \ll K_2$, to $2\tau_i$ where $K_1 \approx K_2$.

When $K_1 \gg K_2$, the two-time-constant concept is unnecessary, because the thermometer will behave like a simple first-order system with the single time constant $(m_1c_1 + m_2c_2)/K_2$.

Effect of conduction. If the effects of K_3 and K_4 are included in the preceding description, the following changes occur:

Time constant m_1c_1/K_1 is changed to $m_1c_1/(K_1 + K_3)$;

Time constant m_2c_2/K_2 is changed to $m_2c_2(K_1 + K_3)/K_1K_2F$ where

$$F \equiv 1 + K_3/K_1 + (K_3 + K_4)/K_2 + K_3K_4/K_1K_2 \qquad (19)$$

A more exact computation of the conduction correction for τ_e is derived by solving the Fourier equation

$$\frac{1}{\eta^2} \cdot \frac{\partial^2 T_w}{\partial x^2} = \tau_e \frac{\partial T_w}{\partial t} + T_w - T_f \qquad (20)$$

where τ_e is given by Eq. (16). The computation, which is quite lengthy, has been treated in detail for the case of a bare thermocouple wire[7]; the nature of the conclusion there reached applies also to the case of the thermometer bulb. Substantially, the conclusion is that the effect of the presence of K_4 is to reduce the time constant τ_e to the value $\tau_e(1 - \psi_1)$, where ψ_1 is given by Eqs. (7), (8), and (9).

Experimental determination of internal time constant. Usually, τ_i must be determined experimentally. Such determination is often feasible in the case of a resistance thermometer; it may be difficult in the case of a thermocouple. The determination makes use of the self-heating effect of the thermometer, and involves a reversal of the usual sequence of responses that was described above, wherein T_f affected T_w which then affected T. In this experimental determination, the bulb wall is held at substantially constant temperature and the sensing element is directly exposed to a step change in heat input by abruptly increasing power P (Fig. 5) by an amount sufficient to raise sensing element temperature by perhaps a degree. The sequence of responses is now as follows: the sensing element, being directly subjected to a step change

in input power, responds in the manner shown in Fig. 7, except that now the associated time constant is τ_i; the bulb wall, on the other hand, now being the second mass in the chain of heat transmission, responds as shown in Fig. 8. The response of the bulb wall is not of interest here and will not be discussed in detail.

The experimental technique works well when the thermometer bulb is so massive that the time constant τ_e is large compared to the time constant τ_i. Then, the response of the sensing element to the step change in P is almost completed before the bulb wall temperature begins to show appreciable response to the increase in P.

The technique will be clarified by a description of the actual experiment, which will be given next.

Mechanical arrangement. A suitable arrangement of apparatus is shown in Fig. 9. A 4-liter dewar holds the cryogenic liquid. The dewar is carefully covered and insulated at the top, except for essential penetrations, to prevent entry of room air. The thermometer bulb is immersed in the liquid, which is maintained in circulation by a motor-driven stirrer. The motor is well removed from the liquid; the connecting shaft and the thermometer support are of low thermal conductance.

Electrical arrangement for resistance thermometer. An appropriate circuit is shown in Fig. 10. A Kelvin-bridge circuit is shown since the increased accuracy or sensitivity provided by a multiple bridge[8] is usually unnecessary. Bridge unbalance is recorded by a strip-chart recorder of linear response and adequate response speed. First, with switch S in position 1, and with R1 so high that there is negligible self-heating, the bridge is balanced manually. Switch S is then thrown to position 2, whereby electric power, limited solely by R2, is increased sufficiently to produce a major steady-state deflection of the unbalance recorder. The record of temperature rise of the bulb may then be read to determine τ_i, by the methods shown in Fig. 7.

Quantitative relations for a resistance thermometer. Figure 11 shows a record obtained with a Myers[9] design of platinum resistance thermometer as modified for cryogenic use[10] by replacing the glass bulb with a platinum one. (Note the change of time scale in this record.) A record of this form follows the equation

$$T \approx T_0 + (P/K_1)[1 - \exp(-t/\tau_i)] + (P/K_2)[1 - \exp(-t/\tau_e)] \qquad (21)$$

if $K_3 \ll K_1$, and $(K_3 + K_4) \ll K_2$. If the first exponential clearly seems to have an asymptote (even if the "asymptote" has a slight positive slope rather than being horizontal), the intercept of this asymptote on the ordinate at $t = 0$ represents P/K_1, so that K_1 can be estimated.

In the above example, τ_e was much larger than τ_i. If τ_i and τ_e are of comparable magnitudes, the response will not be of an exact exponential form, although its shape will resemble that of an exponential. However, a tangent at the origin will intersect the asymptote at a time $m_1 c_1 (K_1^{-1} + K_2^{-1})$ and the ordinate of this asymptote will be $(P/K_1) + (P/K_2)$.

By use of the above technique, a Myers design of cryogenic thermometer[9],[10] was found to have a time constant of 8 seconds at the boiling point of liquid nitrogen. A germanium resistance thermometer of the design sketched by Sinclair, et al.[11], wherein heat presumably is conducted to the sensing element principally by the leads, had an internal time constant of 0.3 second at 77 K.

Electrical arrangement for thermocouple. In the case of a thermocouple, the delivery of adequate electrical power to the thermocouple is not always possible. In some cases, if the thermocouple wires have high resistivity, the circuit of Fig. 12 does permit determination of τ_i. However, none of the quantitative relations involving P, as given above for a resistance thermometer, are applicable. Only τ_i itself can be determined.

The circuit of Fig. 12 applies a step change of a-c heat input to the thermocouple. This a.c. is kept from the thermocouple-emf measuring circuit by circuit elements that have very high normal-mode rejection for a.c. To minimize spurious thermal emf's, the junctions J between copper heating-circuit wires and the thermocouple wires should preferably be made without a break in the thermocouple wires and should be well immersed in the stirred cryogenic liquid; the junctions should also be as close as possible to the thermocouple junction.

The capacitors C must be high-quality low-leakage paper dielectric types; several hundred microfarads may be required to pass the necessary heating current. Since full-scale recorder deflection may represent only one or two degrees, a suppression circuit must be used to balance out the normal potential difference generated when switch S is in position 1.

By use of the above technique, an ungrounded thermocouple of No. 24 B&S gage Chromel-Alumel wire, swaged into a 2 mm i.d. sheath, was found to have an internal time constant of 2 seconds at a temperature of 77 K.

CONCLUDING REMARKS

The information that has been presented may be used either to establish an upper limit to the error that might be made in steady-state temperature measurement or to estimate the probable magnitude of the error. In the latter case, the estimate may be used as a correction to the temperature measurement, in order to improve accuracy. However, even after application of the correction, the probable error that remains may be between 20 and 50 percent of the original error. It is therefore desirable to reduce the steady-state error as much as possible. This will generally be found to be fairly easy in the case of liquids flowing through a pipe; it will be more difficult in the case of stagnant gases in

a tank. In the latter case, it will therefore be particularly desirable to choose so simple a design of the thermometer and its installation that a rather accurate computation of steady-state correction can be made. This design may entail auxiliary direct measurement of T_a and T_b.

Deviations from the design of the thermometer model considered here may be used to reduce conduction errors. An obvious improvement, for fluids that are free of abrasive particles, is the use of bleed holes in the bulb wall, not only opposite the sensing element but also nearer to the thermometer head, in order to promote forced cooling of the stem. The use of bleed holes is a common commercial practice.

The method of representing the time response of a thermometer in terms of an internal time constant and an external time constant is a convenient one, particularly in the case of a resistance thermometer, because then the internal time constant can be determined by a simple experiment. It is desirable to perform this experiment at cryogenic temperature, because of the dependence of thermal conductivity and other pertinent properties on temperature. However, even an experiment with water at room temperature may suffice to establish an order of magnitude of the internal time constant. The external time constant can generally be well estimated from established fluid heat transfer relationships; it it cannot be estimated, it will generally be possible at least to estimate an upper bound to its magnitude.

The two-time-constant approach is unnecessary in those thermometer designs, like the bare-wire sensing element directly exposed to the fluid, in which a simple first-order differential equation adequately describes the behavior of the thermometer. In such cases, the computation of an external time constant, based on established heat transfer laws, suffices.

REFERENCES

(1) Miller, C. E., and Flynn, T. M. 1967. ISA Transactions 6:133-138.
(2) McAdams, W. H. 1954. Heat Transmission. 3rd ed. New York: McGraw-Hill.
(3) Jakob, M. 1949. Heat Transfer, Vols. 1 and 2. New York: John Wiley & Sons.
(4) Scott, R. B. 1959. Cyrogenic Engineering. New York: D. Van Nostrand.
(5) Johnson, V. L., ed. 1960. Compendium of the Properties of Materials at Low Temperature. National Bureau of Standards, WADD-TR-60-56.
(6) ———. 1963. American Institute of Physics Handbook. New York: McGraw-Hill.
(7) Scadron, M. D., and Warshawsky, I. 1952. NACA Tech Note 2599.
(8) Warshawsky, I. 1955. Review of Scientific Instruments 26:711-715.
(9) Meyers, C. H. 1932. NBS Journal of Research 9:807-814.
(10) Southard, J. C., and Milner, R. T. 1933. Journal of the American Chemical Society 55:4384-4386.
(11) Sinclair, D. H., Terbeek, H. G., and Malone, J. H. 1970. Cryogenics and Industrial Gases 5(7):15-22.

TABLE I. - PROPERTIES OF VARIOUS LIQUIDS

Liquid	H_2 at 20.4 K	N_2 at 77 K	O_2 at 90 K	CH_4 at 112 K	H_2O at 300 K
ρ, g/cc	0.071	0.81	1.14	0.424	1.00
c, J/(g K)	9.5	2.05	1.71	3.47	4.18
k, mW/(cm K)	1.19	1.40	1.50	1.92	6.18
μ, cP	0.0138	0.158	0.183	0.118	0.86
ν, cS	0.0194	0.00196	0.00160	0.00277	0.0086
β, K^{-1}	0.0162	0.0059	0.0047	0.00340	0.00027
N_{Pr}	1.11	2.34	2.08	2.12	5.78
$N_{Pr}^{1/3}$	1.04	1.32	1.26	1.28	1.80
$g_0\beta c\rho^2/(\mu k)$, $(mm^3\ K)^{-1}$	4670	3460	3720	922	20.9

TABLE II. - THERMAL CONDUCTIVITY OF SOME SOLIDS

Solids	Temperature, K		
	20	90	300
	Thermal conductivity, k, W/(cm K)		
300 Ser. stainless steel	0.020	0.09	0.15
Manganin	.05	.14	.22
Constantan	.09	.17	.23
Platinum	4.6	.8	.7
Iron	3.0	1.5	.8
Copper, elec. tough pitch	13	4.7	4.0
Quartz, glass	.0015	.005	.010
Nylon	.0010	.0031	.0035
Teflon	.0014	.0024	.0026

TABLE III. - VALUE OF $1/\psi_1$

ηL_2	L_3/L_2	L_1/L_2				
		0	0.25	0.50	0.75	1
1	2	2.72	2.64	2.41	2.10	1.76
	3	3.59	3.78	3.45	3.01	2.76
	5	6.24	6.05	5.54	4.82	4.06
2	2	11.0	9.77	7.14	4.68	2.93
	3	18.3	16.3	11.8	7.76	4.86
	5	32.8	29.1	21.3	13.9	8.71
3	2	40.1	31.0	17.1	8.36	3.98
	3	70.2	54.2	29.8	14.6	6.97
	5	130	100	55.4	27.1	12.9
4	2	136	88	36.3	13.6	5
	3	246	159	65.3	24.4	9
	5	464	301	123	46.1	17
5	2	445	236	72.6	20.9	6
	3	816	432	133	38.4	11
	5	1560	825	254	73.3	21
6	2	1410	600	140	31.4	7
	3	2620	1110	260	58.3	13
	5	5040	2140	500	112	25
7	2	4380	1480	265	46.0	8
	3	8220	2770	496	86.2	15
	5		5360	960	166	29
8	2		3570	490	66.5	9
	3		6730	930	126	17
	5		13000	1800	244	33
9	2		8400	900	95	10
	3		16000	1710	180	19
	5		31000	3330	351	37
10	2		20000	1630	134	11
	3		38000	3120	257	21
	5		74000	6100	499	41

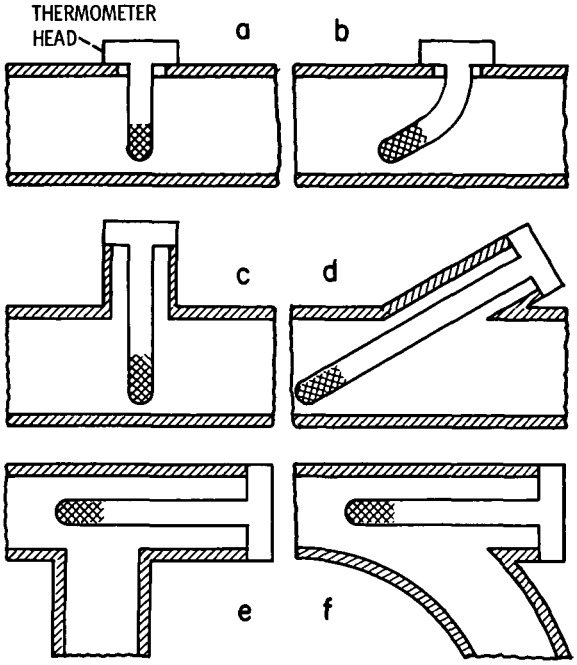

Fig. 1. Representative thermometer installations.

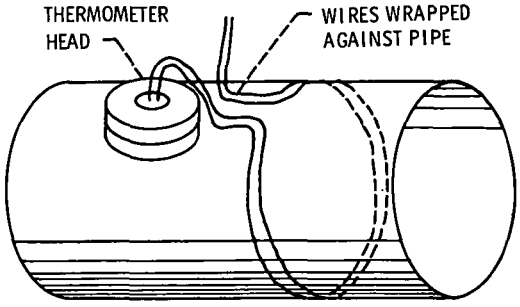

Fig. 2. Method of reducing lead-conduction error.

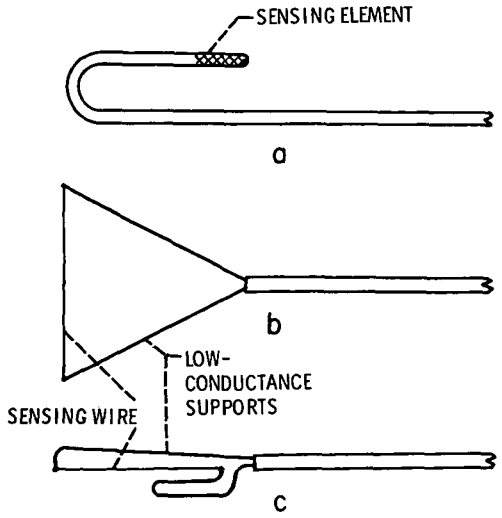

Fig. 3. Thermometer supports in a storage tank.

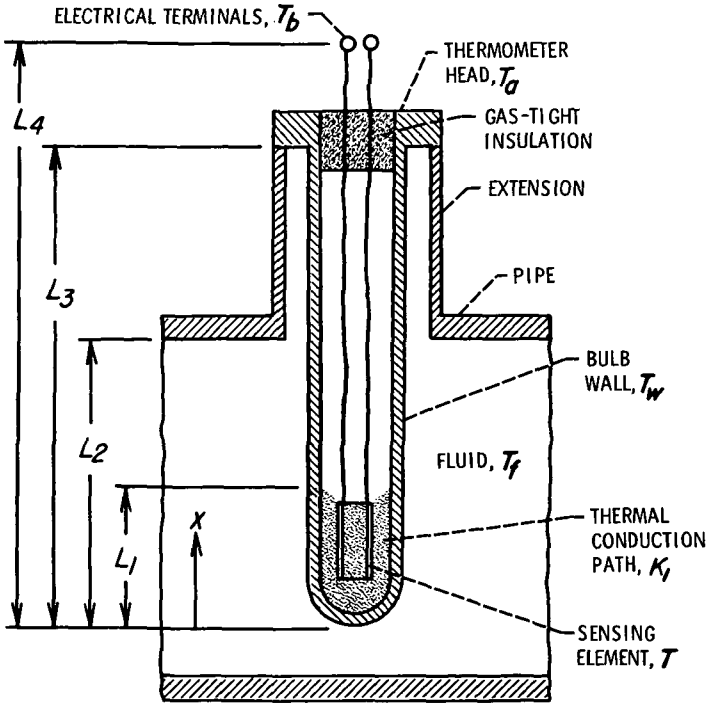

Fig. 4. Thermometer model.

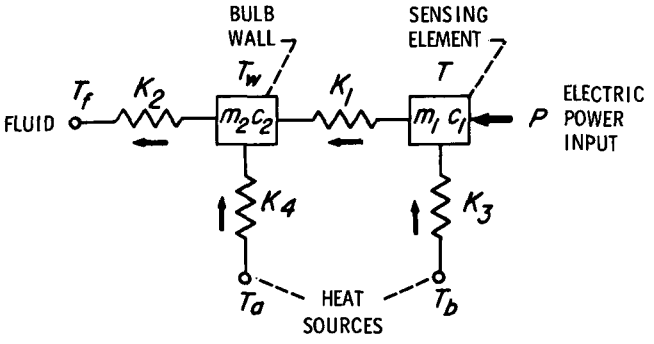

Fig. 5. Heat flow diagram.

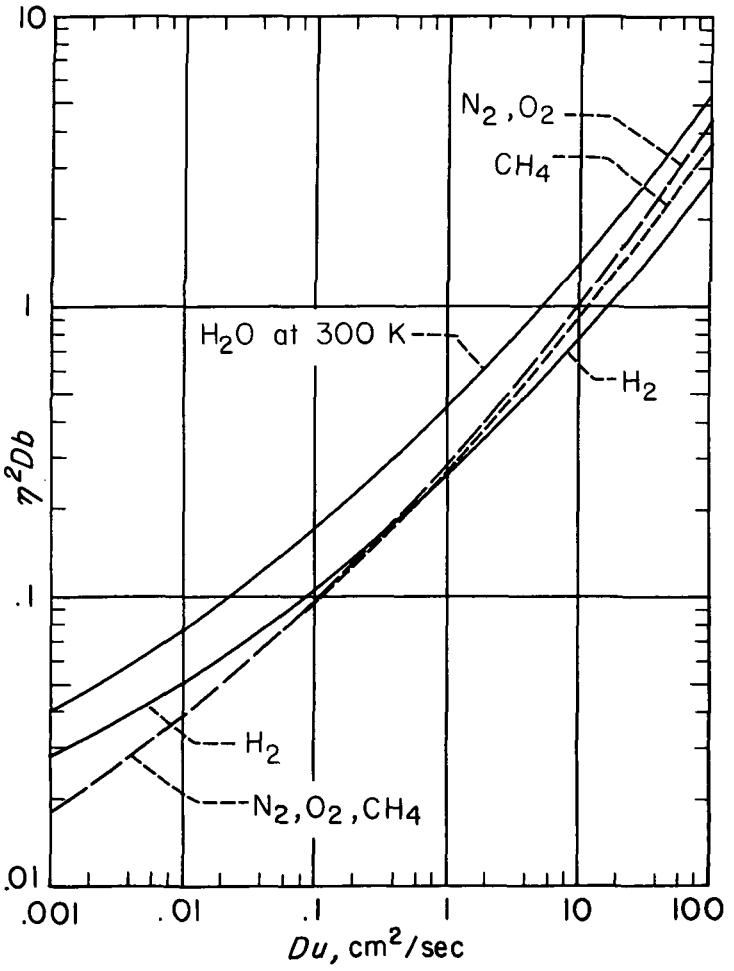

Fig. 6. $N_{Nu} k_f / k_{m4} = \eta^2 Db$ as a function of Du, for water at 300K and for cryogenic liquids at their normal boiling points; austenitic stainless steel bulb.

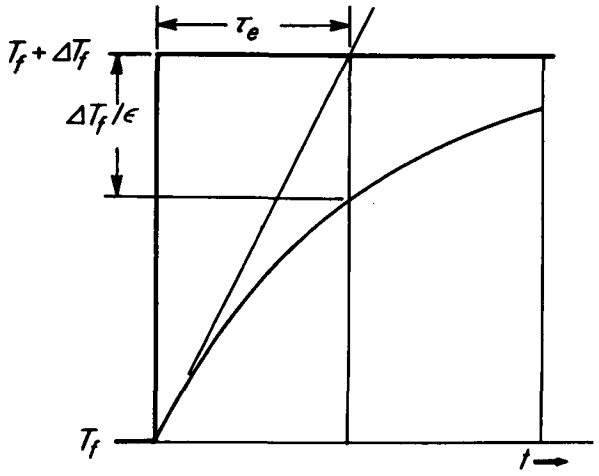

Fig. 7. Response of first-order system to a step change.

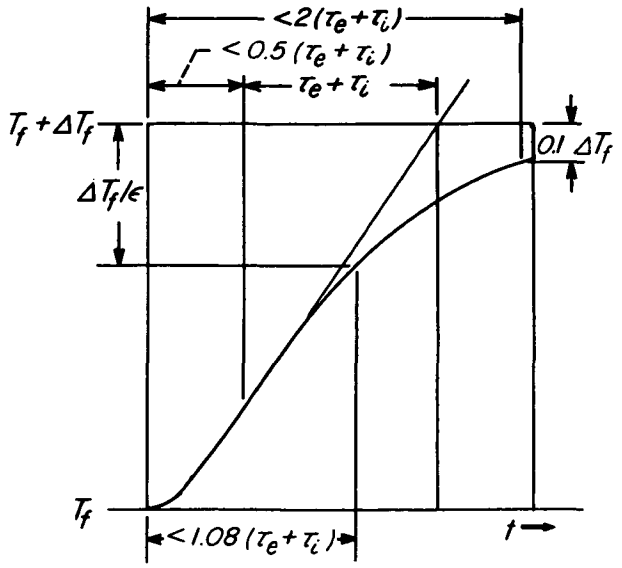

Fig. 8. Response of first-order system to an exponential change.

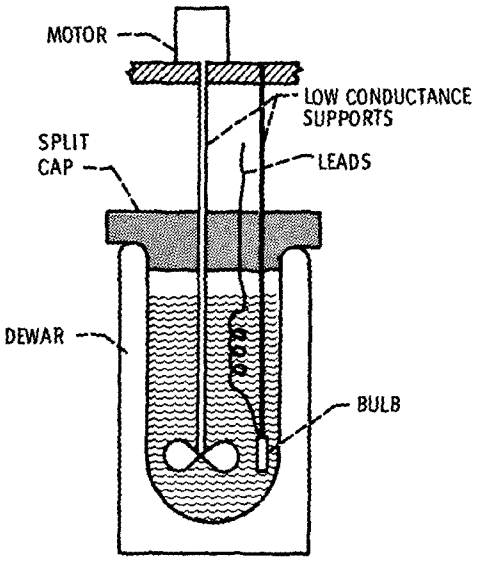

Fig. 9. Experimental determination of internal time constant. Mechanical arrangement.

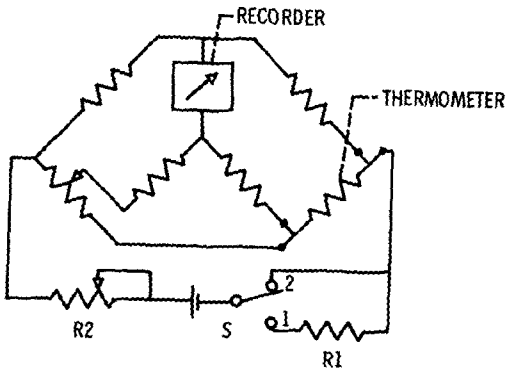

Fig. 10. Internal time constant determination. Circuit for resistance thermometer.

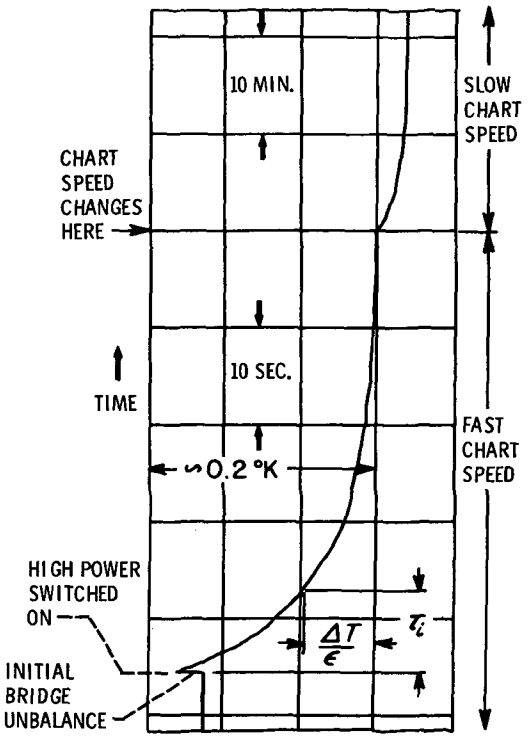

Fig. 11. Typical record of time constant determination. Type 8164 bulb.

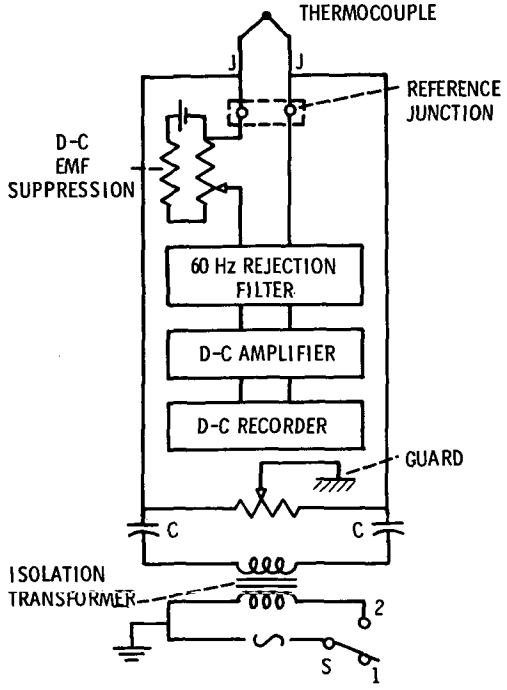

Fig. 12. Internal time constant determination. Circuit for thermocouple.