NATIONAL AERONAUTICS AND SPACE ADMINISTRATION

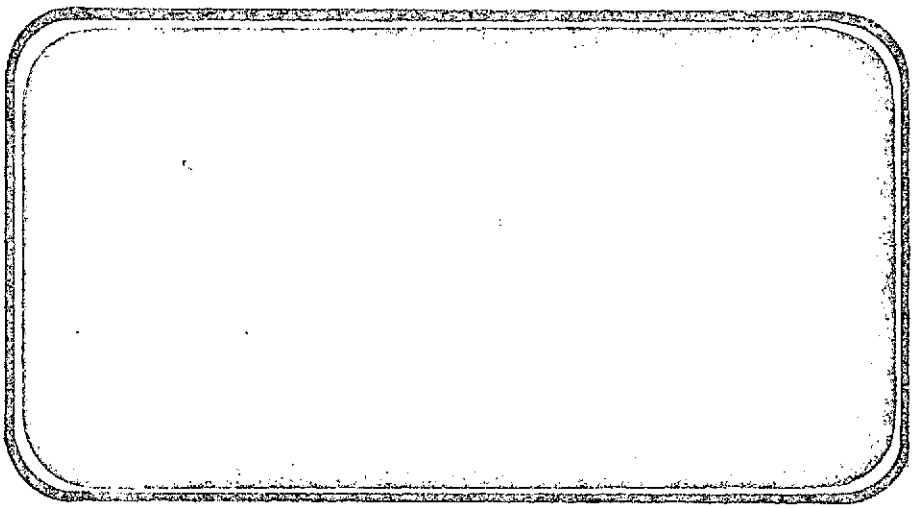

NASA-CR-134076) HEAT TRANSFER PHASE CHANGE PAINT TEST (OH-42) OF A ROCKWELL INTERNATIONAL SSV ORBITER IN THE NASA/LRC MACH 8 VARIABLE DENSITY WIND (Chrysler Corp.) 244 p HC $14.25 CSCL 11C G3/18

N74-16251

Unclas 28593



SPACE SHUTTLE

AEROTHERMODYNAMIC DATA REPORT

JOHNSON SPACE CENTER

HOUSTON, TEXAS

DATA MANagement services

SPACE DIVISION CHRYSLER CORPORATION

December, 1973

DMS-DR-2101
NASA CR-134,076

HEAT TRANSFER PHASE CHANGE PAINT TEST (OH-42) OF A ROCKWELL INTERNATIONAL SSV ORBITER IN THE NASA/LRC MACH 8 VARIABLE DENSITY WIND TUNNEL

By

NASA Project Engineers	Rockwell International Engineers	
R. Jones	M. Quan	H. Gorowitz
T. Creel	W. Dye	C. Craig
P. Lawing	J. Cummings	G. Rich

Prepared under NASA Contract Number NAS9-13247

by

Data Management Services
Chrysler Corporation Space Division
New Orleans, La. 70189

for

Engineering Analysis Division

Johnson Space Center
National Aeronautics and Space Administration
Houston, Texas

TEST PURPOSE: To determine underbody aerodynamic heating rates of various orbiter wing configurations during simulated entry conditions.

TESTING AGENCY: NASA/LRC Variable Density Hypersonic Wind Tunnel

TEST NO'S AND DATES: OH-42A - 5/14/73 to 5/18/73

OH-42B - 5/24/73 to 6/1/73

OH-42C - 6/14/73 to 6/15/73

NASA PROJECT ENGINEERS:

R. Jones, Rm 217A
T. Creel, Rm 202
P. Lawing, Rm 215

NASA Langley Research Center
Hampton, Virginia
HVD Aerodynamic & Heating Section
Mail Stop 160A
Bldg. 1247A

ROCKWELL INTERNATIONAL ENGINEERS:

M. Quan
W. Dye
J. Cummings
H. Gorowitz
C. Craig
G. Rich

12214 Lakewood Blvd.,
Mail Code AC07
Downey, California

DATA MANAGEMENT SERVICES:

This document has been prepared by:

G. G. McDonald
Data Operations

G. G. McDonald

This document has been reviewed and is approved for release.

FOR N. D. Kemp
Data Management Services

J. L. Glynn

Chrysler Corporation Space Division assumes no responsibility for the data displayed herein other than its publication and distribution.

TABLE OF CONTENTS

	PAGE
SUMMARY	2
INDEX OF MODEL PHOTOGRAPHS AND SKETCHES	4
INDEX OF DATA FIGURES	5
LIST OF TABLES	6
NOMENCLATURE	7
FACILITY DESCRIPTION	9
MODEL DESCRIPTION	10
INSTRUMENTATION	25
TEST PROCEDURE	26
DATA REDUCTION	27
PHASE CHANGE PAINT DATA	29
REFERENCES	29
TABLES	30
MODEL PHOTOGRAPHS	42
DATA FIGURES	55

SUMMARY

This report presents the results of the phase change paint tests of a Rockwell International .00593-scale Space Shuttle Orbiter conducted in the Langley Research Center's Variable Density Wind Tunnel. The tests were conducted in three parts: OH-42A, B and C from May 14, to May 18, 1973, May 24, to June 1, 1973, and June 14 to June 15, 1973 respectively.

The test objectives of OH-42A and B were to determine the effects of various wing/underbody configurations on the aerodynamic heating rates and boundary layer transition during simulated entry conditions. Several models were constructed. Each varied from the other in either wing cuff radius, airfoil thickness, or wing-fuselage underbody blending. Two ventral fins were glued to the fuselage underside of one model to test the interference heating effects. Simulated Mach 8 entry data were obtained for each configuration at angles of attack ranging from 25 to 40°, and a Reynolds Number variation of 1×10^6 to 8×10^6. Elevon, bodyflap, and rudder flare deflections were tested on Configuration No. 4.

Oil flow visualization and Schlieren photographs were obtained to aid in reducing the phase change paint data as well as to observe the flow patterns peculiar to each configuration. A total of 22 and 64 runs were conducted during OH-42A and B respectively.

The objective of the OH-42C tests was to determine the effects of 17° and 34° leading edge sweep trimmers on the underbody aerodynamic heating rates during simulated entry conditions. Mach 8 data were obtained for angles of attack of 25, 30, and 35° and Reynolds Numbers of 1, 3, and 6×10^6. Twenty-four runs were conducted during OH-42C.

This report makes no attempt to analyze the data obtained, but outlines the model description, testing procedure, data reduction, and presents the phase change paint data.

Cognizant personnel include:

M. Quan	Wind Tunnel Operations
W. Dye	Wind Tunnel Operations
J. Cummings	Wind Tunnel Operations
C. Craig	Aerothermodynamics
H. Gorowitz	Aerothermodynamics

INDEX OF MODEL PHOTOGRAPHS AND SKETCHES

	Photograph No.
MODEL #46-0 Configuration #1	1
Paint Stripe - Model 46-0, Configuration #1	2
Paint Stripe - Model 46-0, Configuration #1	3
Paint Stripe - Model 46-0, Configuration #1	4
Model #46-0, Configuration #2	5
Model #46-0, Configuration #3 and #5	6
Model #46-0, Configuration #5 and #6	7
Model #46-0, Configuration #5 and #6	8
OH42A Oil Flow	9

SCHLIEREN PHOTOGRAPHS (ALL MACH 8)

Model #46-4, $\alpha = 30°$, RN = 5×10^6	10
Model #46-4BF, $\alpha = 30°$, RN = 3×10^6	11
Model #46-5 (17° Trimmer) $\alpha = 30°$, RN = 3×10^6	12
Model #46-6 (34° Trimmer) $\alpha = 30°$, RN = 3×10^6	13
Model #46-5, $\alpha = 30°$, RN = 3×10^6, 15° Paint	14
Model #46-5, $\alpha = 30°$, RN = 3×10^6, oil flow	15

Sketch 16. Model 46-0 Configurations (#1 through #6) Sketch 16

INDEX OF DATA FIGURES

TOP CAMERA GRIDS	Figure No.
Grid for runs 4130 to 4137	1
Grid for runs 4138 to 4171	2
Grid for runs 4172 to 4176	3
Grid for runs 4177 to 4193	4
Grid for runs 4271 to 4285	5
Grid for runs 4286 to 4292	6
Grid for runs 4293 to 4295	7
SIDE CAMERA GRIDS	
Grid for runs 4130 to 4137	8
Grid for runs 4138 to 4171	9
Grid for runs 4172 to 4176	10
Grid for runs 4177 to 4193	11
Grid for runs 4271 to 4285	12
Grid for runs 4286 to 4292	13
PHASE CHANGE PAINT DATA - TOP CAMERA	
OH42A runs 4084 to 4105	14 to 30
OH42B runs 4130 to 4193	31 to 86
OH42C runs 4271 to 4295	87 to 102
PHASE CHANGE PAINT DATA - SIDE CAMERA	
OH42A runs 4084 to 4105	103 to 120
OH42B runs 4130 to 4193	121 to 175
OH42C runs 4271 to 4288	176 to 186

LIST OF TABLES

	Table No.
Model Material Properties	1
Data Reduction Recovery Factors	2
Model Designations for Summary Sheets	3
Test Data Summary Sheets	4

NOMENCLATURE

C_p = Specific heat of model material (BTU/LB°F)

g = Gravitational constant (32.2 lb_m/lb_f ft/sec^2)

h = Model thin film heat transfer coefficient (BTU/FT^2-sec-°F)

h_s = Theoretical thin film heat transfer coefficient (BTU/FT^2-sec-°F)

k = Thermoconductivity of model material (BTU/FT-sec-°F) or as noted

M_∞ = Tunnel freestream Mach Number

N_r = Model nose radius (Ft)

P_{TOTAL} = Tunnel total pressure (psi)

$\dot{q}$ = Model aerodynamic heating rate

R = Universal gas constant = 53.35 $\frac{FT\text{-}lb_f}{lb_m - °R}$

t = Time in seconds

T_{aw} = Model adiabatic wall temperature (°F)

T_{IN} = Model initial temperature (°F)

$T_o = T_{TOTAL}$ = Tunnel stagnation temperature (°F)

T_{PC} = Phase change paint melting temperature (°F)

P_r = Prandtl number

Greek Symbols

α = Angle of attack, degrees

γ = Ratio of specific heats (1.4)

ρ_s = Tunnel stagnation density (lb_m/ft^3)

ρ_w = Air density along model wall (lb_m/ft^3)

μ_s = Stagnation air viscosity (lb_m/ft-sec)

μ_w = Air viscesity along model wall (lb_m/ft-sec)

NOMENCLATURE - Continued

Subscripts

s	=	Theoretical
∞	=	Freestream
o	=	Stagnation conditions
aw	=	Adiabatic wall
IN	=	initial
w	=	model wall
β	=	angle of sideslip, degrees, unless subscripted otherwise

TEST FACILITY DESCRIPTION

The Langley Mach 8 Variable-Density Hypersonic Tunnel is located in Building 1247D and is under the direction of the Aero-Physics Division. This tunnel is used for fundamental aerodynamic and fluid dynamic investigations over large Reynolds number ranges using pressure and heat transfer measurements. The test medium is air and is heated by a combination of Dowtherm and electrical resistance. Model mounting consists of sting mount with injection mechanism. The tunnel has an axially symmetric contoured nozzle. The test section diameter is 18 inches with a core of 4 to 14 inches depending on pressure. It exhausts into a vacuum tank or the atmosphere.

Examples of operating conditions are as follows:

Stagnation pressure (PSIA).....	15 to 2930
Stagnation temperature (^{o}R).....	1160 to 1510
Mach Number.....	7.5 to 8.0
Reynolds number per foot (1/ft)	0.1×10^{6} to 12.0×10^{6}
Running time (SEC), for	
Exhausting into vacuum tank	90
Exhausting into atmosphere	600

46-O MODEL DESCRIPTION

The models tested were .00593 scale, full-span models of various Rockwell International Space Shuttle Orbiter Configurations (Models 46-O).

Eight orbiter models were provided in six different configurations defined by the reference drawings below. Configuration #1 uses the 139 Orbiter Configuration. Configuration #2 differs from #1 only by the 500-inch leading edge cuff radius. Configuration #3 is the same as #1, except for airfoil thickness, Configuration #4 is the same as #1, except that the underside of the wing-body is smoothly faired to an saucer shape. Configuration #5 and #6 are the same as Configuration #4, except with the addition of a 17° and a 34° trimmer respectively. Of the eight models, seven were actual test articles, and one was painted with a stripe-reference system to facilitate the data reduction. The models were cast around a steel sting using the Grumman Aerospace Corporation's proprietary Material "G".

In order to obtain valid melting-rate data, the upper surface of each wing was slabbed using two control butt line stations. At B.L. 199.045, the section was slabbed in a straight line from the 40 percent chord to a trailing edge thickness 0.21-inch. At B.L. 468.34, the slabbing was from the 40 percent chord to a trailing edge thickness of 0.060-inch. The rest of the wing was slabbed from the 40 percent chord to a straight line between these two points on the trailing edge.

The elevon, rudder, and body-flap deflections were separate wedge pieces and were glued on when needed. The control surface deflections tested were as follows:

46-0 MODEL DESCRIPTION - Continued

Elevons (both sides): 0° and +10° (positive deflections are trailing edge down)

Body flap: 0° and +10°

Rudder: 20° flare on starboard side only, port undeflected.

Listed below are the configurations tested:

No. of Models	Model No.	Drawing No.	Components
3	46-1	VL70-000139	$B_{17}C_7M_4F_5W_{103}E_{22}V_7R_5$
1	46-2	VL70-000139 Mod.	$B_{17}C_7M_4F_5W_{105}E_{22}V_7R_5$
1	46-3	VL70-000139A	$B_{17}C_7M_4F_5W_{104}E_{22}V_7R_5$
1	46-4	VL70-000139A Mod.	$B_{17}C_7M_4F_5W_{106}E_{22}V_7R_5$
1	46-5	VL70-000139A +17° trimmer	$B_{17}C_7M_4F_5W_{106}E_{22}V_7R_5H_{16}$
1	46-6	VL70-000139A +34° trimmer	$B_{17}C_7M_4F_5W_{106}E_{22}V_7R_5H_{17}$

(Reference Sketch 16)

MODEL COMPONENT: Body (B_{17})

GENERAL DESCRIPTION: Basic fuselage for models 46-1, -2, -3, -4.

Model Scale = 0.00593

DRAWING NUMBER VL70-000139

DIMENSION:	FULL SCALE	MODEL SCALE
Length ~ in.	1290.3	7.65148
Max Width ~ in.	267.6	1.58687
Max Depth ~ in.	244.5	1.44988
Fineness Ratio	4.82175	4.82175
Area ~ ft^2		
Max Cross-Sectional	386.67	0.01360
Planform		
Wetted		
Base		

MODEL COMPONENT: Canopy (C_7)

GENERAL DESCRIPTION: 3 configurations per lines VL70-000139. Insufficient information to complete dimensional data at this time.

Model Scale = 0.0175

DRAWING NUMBER VL70-000139

DIMENSION:	FULL SCALE	MODEL SCALE
Length (Sta. Fwd. Bulkhead)	432.70	7.57225
Max Width (T.E. Bulkhead)	571.40	9.99950
Max Depth (WPZ_o = _____ to Z_o = 501)		
Fineness Ratio		
Area		
Max Cross-Sectional		
Planform		
Wetted		
Base		

MODEL COMPONENT: OMS Pod (M_4)

GENERAL DESCRIPTION: OMS Pods located on the aft orbiter fuselage.

Model Scale = 0.00593

DRAWING NUMBER VL70-000139

DIMENSION:	FULL SCALE	MODEL SCALE
Length ~ in.	346.0	2.05178
Max Width ~ in.	108.0	0.64044
Max Depth ~ in.	113.0	113.0
Fineness Ratio		
Area		
Max Cross-Sectional		
Planform		
Wetted		
Base		

$\mathcal{L}$ of OMS Pod

WP = 463.9 in. F.S.: WP 400 + 63.9 = 463.9

BP = 80.0 in. F.S.

Length 1214.0 to 1560.0 = 346.0 in. F.S.

NOTE: M_4 identical to M_3 of 2A configuration except intersection to body

MODEL COMPONENT: Body Flap (F_5)

GENERAL DESCRIPTION: Body flap located on the lower aft end of the orbiter fuselage.

Model Scale = 0.00593

DRAWING NUMBER VL70-000139

DIMENSION:	FULL SCALE	MODEL SCALE
Length ~ in.	84.70	0.50227
Max Width ~ in.	267.6	1.58687
Max Depth		
Fineness Ratio		
Area ~ ft^2		
Max Cross-Sectional		
Planform	142.5195	0.00501
Wetted		
Base	38.0958	0.00134

MODEL COMPONENT: Wing (W_{103})—New lightweight orbiter

GENERAL DESCRIPTION: Orbiter wing for model 46-1

NOTE: Dihedral angle is defined at the lower surface of the wing at the 75.33 percent element line projected into a plane perpendicular to the FRL.

Model Scale = 0.00593

TEST NO. DWG. NO. VL70-000139

DIMENSIONS:	FULL-SCALE	MODEL SCALE
TOTAL DATA		
Area, (Theo.) ft^2 Planform	2690.00	0.09459
Span, (Theo.) in.	936.68	5.55451
Aspect Ratio	2.265	2.265
Rate of Taper	1.177	1.177
Taper Ratio	0.200	0.200
Dihedral Angle, degrees (@ T.E. of Elevon)	3.500	3.500
Incidence Angle, degrees	3.000	3.000
Aerodynamic Twist, degrees	+3.000	+3.000
Sweepback angles, degrees		
Leading Edge	45.000	45.000
Trailing Edge	-10.24	-10.24
0.25 Element Line	35.209	35.209
Chords:		
Root, (Theo.) B.P.O.O.	689.24	4.08719
Tip, (Theo.) B.P.	137.85	0.81745
MAC	474.81	2.81562
Fus. Sta. of 0.25 MAC	1136.89	6.74176
W.P. of 0.25 MAC	299.20	1.77426
B.L. of 0.25 MAC	182.13	1.08003
EXPOSED DATA		
Area, (Theo.) ft^2	1752.29	0.06162
Span, (Theo.) in. BP108	720.68	4.27363
Aspect Ratio	2.058	2.058
Taper Ratio	0.2451	0.2451
Chords		
Root BP108	562.40	3.33503
Tip 1.00 b/2	137.85	0.81745
MAC	393.03	2.33067
Fus. Sta. of 0.25 MAC	1185.31	7.02889
W.P. of 0.25 MAC	300.20	1.78019
B.L. of 0.25 MAC	143.76	0.85250
Airfoil Section (Rockwell Mod NASA) XXXX-64		
Root b/2 = 0.425	0.10	0.10
Tip b/2 =	0.12	0.12
Data for (1) of (2) Sides		
Leading Edge Cuff Planform Area ft^2	120.33	0.00423
Leading Edge Intersects Fus M. L. @ Sta	560.0	3.32080
Leading Edge Intersects Wing @ Sta	1035.0	6.13755

Space Division
Rockwell International

MODEL COMPONENT: Wing (W_{104})—New lightweight orbiter

GENERAL DESCRIPTION: Orbiter wing for Model 46-3. NOTE: Dihedral angle is defined at the lower surface of the wing at the 75.33-percent element line projected into a plane perpendicular to the FRL.

Model Scale = 0.00593

TEST NO. DWG. NO. VL70-000139A

DIMENSIONS:	FULL-SCALE	MODEL SCALE
TOTAL DATA		
Area, (Theo.) ft^2 Planform	2690.00	0.09459
Span, (Theo.) in.	936.68	5.55451
Aspect Ratio	2.265	2.265
Rate of Taper	1.177	1.177
Taper Ratio	0.200	0.200
Dihedral Angle, degrees (@ T.E. of Elevon)	3.500	3.500
Incidence Angle, degrees	3.000	3.000
Aerodynamic Twist, degrees	+3.000	+3.000
Sweepback Angles, degrees		
Leading Edge	45.000	45.000
Trailing Edge	-10.24	-10.24
0.25 Element Line	35.209	35.209
Chords:		
Root, (Theo.) B.P.0.0.	689.24	4.08719
Tip, (Theo.) B.P. 468.341	137.85	0.81745
MAC	474.81	2.81562
Fus. Sta. of 0.25 MAC	1136.89	6.74176
W.P. of 0.25 MAC	299.20	1.77426
B.L. of 0.25 MAC	182.13	1.08003
EXPOSED DATA		
Area, (Theo.) ft^2	1752.29	0.06162
Span, (Theo.) in. BP108 + 468.341	720.68	4.27363
Aspect Ratio	2.058	2.058
Taper Ratio	0.2451	0.2451
Chords		
Root BP108	562.40	3.33503
Tip 1.00 b/2	137.85	0.81745
MAC	393.03	2.33067
Fus. Sta. of 0.25 MAC	1185.31	7.02889
W.P. of 0.25 MAC	300.20	1.78019
B.L. of 0.25 MAC	143.76	0.85250
Airfoil Section (Rockwell Mod NASA) XXXX-64		
Root b/2 = 0.425	0.12	0.12
Tip b/2 = 1.00	0.12	0.12
Data for (1) of (2) Sides	1	
Leading Edge Cuff Planform Area ft^2	120.33	0.00423
Leading Edge Intersects Fus M. L. @ Sta	560.0	3.32080
Leading Edge Intersects Wing @ Sta	1035.0	6.13755

NOTE: W_{104} identical to W_{103} except airfoil thickness. SD 73-SH-0122

MODEL COMPONENT: Wing (W_{105})—New lightweight orbiter

GENERAL DESCRIPTION: Orbiter wing for Model 46-2.

NOTE: W_{105} identical to W_{103} except 500-inch radius used to connect cuff to wing.

Model Scale = 0.00593

TEST NO.

DWG. NO. VL70-000139 MOD

DIMENSIONS:	FULL-SCALE	MODEL SCALE
TOTAL DATA		
Area, (Theo.) ft^2		
Planform	2690.00	0.09459
Span, (Theo.) in.	936.68	5.55451
Aspect Ratio	2.265	2.265
Rate of Taper	1.177	1.177
Taper Ratio	0.200	0.200
Dihedral Angle, degrees	3.500	3.500
Incidence Angle, degrees	3.000	3.000
Aerodynamic Twist, degrees	+3.000	+3.000
Sweepback Angles, degrees:		
Leading Edge	45.000	45.000
Trailing Edge	-10.24	-10.24
0.25 Element Line	35.209	35.209
Chords:		
Root, (Theo.) B.P.O.O.	689.24	4.08719
Tip, (Theo.) B.P.	137.85	0.81745
MAC	474.81	2.81562
Fus. Sta. of 0.25 MAC	1136.89	6.74176
W.P. of 0.25 MAC	299.20	1.77426
B.L. of 0.25 MAC	182.13	1.08003
EXPOSED DATA		
Area, (Theo.) ft^2	1752.29	0.06162
Span, (Theo.) in. BP108	720.68	4.27363
Aspect Ratio	2.058	2.058
Taper Ratio	0.2451	0.2451
Chords		
Root BP108	562.40	3.33503
Tip 1.00 b/2	137.85	0.81745
MAC	393.03	2.33067
Fus. Sta. of 0.25 MAC	1185.31	7.02889
W.P. of 0.25 MAC	300.20	1.78019
B.L. of 0.25 MAC	143.76	0.85250
Airfoil Section (Rockwell Mod NASA) XXXX-64		
Root b/2 = 0.425	0.10	0.10
Tip b/2 =	0.12	0.12
Data for (1) of (2) Sides		
Leading Edge Cuff Planform Area ft^2	122.67	0.00431
Leading Edge Intersects Fus M. L. @ Sta	569.50	3.3771
Leading Edge Intersects Wing @ Sta	1135.4	6.7329

MODEL COMPONENT: Wing (W_{106})--Data not available

GENERAL DESCRIPTION: Same as W_{104} except that the underside of the wing-body is smoothly faired to a saucer shape.

TEST NO. DWG. NO.

DIMENSIONS:	FULL-SCALE	MODEL SCALE
TOTAL DATA		
Area (Theo.) Ft^2		
Planform		
Span (Theo In.		
Aspect Ratio		
Rate of Taper		
Taper Ratio		
Dihedral Angle, degrees		
Incidence Angle, degrees		
Aerodynamic Twist, degrees		
Sweep Back Angles, degrees		
Leading Edge		
Trailing Edge		
0.25 Element Line		
Chords:		
Root (Theo) B.P.O.O.		
Tip, (Theo) B.P.		
MAC		
Fus. Sta. of .25 MAC		
W.P. of .25 MAC		
B.L. of .25 MAC		
EXPOSED DATA		
Area (Theo) Ft^2		
Span, (Theo) In. BP108		
Aspect Ratio		
Taper Ratio		
Chords		
Root BP108		
Tip 1.00 $\frac{b}{2}$		
MAC		
Fus. Sta. of .25 MAC		
W.P. of .25 MAC		
B.L. of .25 MAC		
Airfoil Section (Rockwell Mod NASA) XXXX-64		
Root $\frac{b}{2}$ =		
Tip $\frac{b}{2}$ =		
Data for (1) of (2) Sides		
Leading Edge Cuff Planform Area Ft^2		
Leading Edge Intersects Fus M. L. @ Sta		
Leading Edge Intersects Wing @ Sta		

MODEL COMPONENT: Elevon (E_{22})

GENERAL DESCRIPTION: Elevon for W_{103}, W_{104}, W_{105}, W_{106}.

VL70-000139 data for (1) of (2) sides

Model Scale = 0.00593

DRAWING NUMBER: VL70-000139

DIMENSIONS:	FULL-SCALE	MODEL SCALE
Area ~ Ft^2	205.52	0.00723
Span (equivalent) ~ in.	353.34	2.09531
Inb'd equivalent chord	114.78	0.68064
Outb'd equivalent chord	55.00	0.32615
Ratio movable surface chord/ total surface chord		
At Inb'd equiv. chord	0.208	0.208
At Outb'd equiv. chord	0.400	0.400
Sweepback Angles, degrees		
Leading Edge	0.00	0.00
Trailing Edge	-10.24	-10.24
Hinge Line	0.00	0.00
Area Moment (Normal to hinge line) ~ ft^3	1548.07	0.00032
Product of Area Moment		

MODEL COMPONENT: Vertical (V_7)—Lightweight orbiter configuration.

GENERAL DESCRIPTION: Centerline vertical tail, double-wedge airfoil with rounded leading edge.

Model Scale = 0.00593

DRAWING NUMBER: VL70-0000139
VL70-000095

DIMENSIONS:	FULL-SCALE	MODEL SCALE
TOTAL DATA		
Area, (Theo.) ft^2	425.92	0.01498'
Planform		
Span, (Theo.) in.	315.72	1.87222
Aspect Ratio	1.675	1.675
Rate of Taper	0.507	0.507
Taper Ratio	0.404	0.404
Sweepback Angles, degrees		
Leading Edge	45.000	45.000
Trailing Edge	26.249	26.249
0.25 Element Line	41.130	41.130
Chords:		
Root, (Theo.) WP	268.50	1.59220
Tip, (Theo.) WP	108.47	0.64323
MAC	199.81	1.18487
Fus. Sta. of 0.25 MAC	1463.50	8.67856
W.P. of 0.25 MAC	635.522	3.76864
B.L. of 0.25 MAC	0.00	0.00
Airfoil Section		
Leading Wedge Angle, degrees	10.000	10.000
Trailing Wedge Angle, degrees	14.920	14.920
Leading Edge Radius ~ in.	2.00	0.01186
Void Area	13.17	0.00046
Blanketed Area		

MODEL COMPONENT: Rudder (R_5)

GENERAL DESCRIPTION: Rudder for V_7

Model Scale = 0.00593

DRAWING NUMBER: VL70-000139
VL70-000095

DIMENSIONS:		FULL-SCALE	MODEL SCALE
Area, ~ ft^2		106.38	0.00374
Span, (equivalent) ~ in.		201.0	1.19193
Inb'd equivalent chord		91.585	0.54310
Outb'd equivalent chord		50.833	0.30144
Ratio movable surface chord/ total surface chord			
At Inb'd equiv. chord		0.400	0.400
At Outb'd equiv. chord		0.400	0.400
Sweepback Angles, degrees.			
Leading Edge		34.83	34.83
Trailing Edge		26.25	26.25
Hinge Line		34.83	34.83
Area Moment (Normal to hinge line)	Ft^3	526.13	0.00011
Product of area and mean chord			

MODEL COMPONENT: Trimmer H_{16}

GENERAL DESCRIPTION: Trimmer for configuration 3, per lines VL70-000139/SS-H-00381

Model Scale = .00593

DRAWING NUMBER

DIMENSION:	FULL SCALE	MODEL SCALE
Length	285.96	1.696
Max Width	80.192	.476
Max Depth		
Fineness Ratio		
Area		
Max Cross-Sectional		
Planform	84.25	.0029
Wetted		
Base		
Sweep Back Angle - Degrees	17.0	17.0
Leading Edge Intersects Fus @ Sta	566.0	3.356
Leading Edge Intersects Glove @ Sta	847.62	5.026

MODEL COMPONENT: Trimmer H_{17}

GENERAL DESCRIPTION: Trimmer for Configuration 3, per lines VL70-000139/SS-H-00381

Model Scale = .00593

DRAWING NUMBER

DIMENSION:	FULL SCALE	MODEL SCALE
Length	285.96	1.696
Max Width	148.995	.884
Max Depth		
Fineness Ratio		
Area		
Max Cross-Sectional		
Planform	168.494	.0059
Wetted		
Base		
Sweep Back Angle - Degrees	34.0°	34.0
Leading Edge Intersects Fus @ Sta	566.0	3.356
Leading Edge Intersects Glove @ Sta	847.62	5.026

INSTRUMENTATION

(1) Two 35mm cameras with a shutter speed of 1/10-second were used during the tests; one recorded the paint melting characteristics on the model bottom surface and the other recorded the melting on the models left side (pilot left).

(2) Phase change paint was used with a temperature sensitivity range of 150°F to 550°F. The paint was thinned with acetone and spray painted on the model. Acetone was also used as the cleaning solvent.

(3) White lead oil mixed with a small amount of motor oil to decrease the viscosity was used for the oil flow visualization tests.

(4) A polaroid camera was used for detailed photographs after the test.

(5) A contact thermometer was used for determining the model initial temperature.

Test Procedure

The general procedures used during the test are outlined below:

(1) Prior to each run, the model was cleaned with a solvent, dried, and spray painted with phase change paint and installed in the injection chamber.

(2) The model initial temperature was recorded by touching a contact thermometer against the model surface.

(3) After flow was established, two 35mm cameras were initiated just prior to injection. This was done to enable the film readers to determine when injection started. Continuous pictures were taken throughout the entire run until the model was retracted from the test section. The duration of the model in the test section was determined by the operating conditions and the paint temperature, but usually averaged 10 to 12 seconds.

(4) The model was then removed from the injection chamber and more detailed photographs of interesting flow or paint melt patterns not clearly visible to the 35mm cameras were taken with a polaroid camera. These photographs were taken to enhance the 35mm photo coverage.

(5) After each model attitude change, the paint stripe model was photographed with the 35mm cameras for use as an aid in data reduction. The paint striping clearly located various X/L locations as well as water planes, chords, and spun locations that would have been difficult to locate on the bottom camera due to the angle of attack setting. These photos are also used for drawing the model outline during the film reading process.

DATA REDUCTION

The isotherm data (data Figures 1 through 184) were obtained by tracing the photographed time history of the paint melt lines. The model outline was first drawn from the grid model photographs. During the OH-42C test, it was found that by making a cardboard cutout of the model tracing, the time required to draw one complete isotherm map (one run) was reduced 300% to 400% providing there were more than two runs at the same angle of attack.

The frame number of each melt line drawn was recorded which, in turn, indicated the elapsed time of the model from the instant injection started. The time at which the model reached the tunnel centerline was also recorded and usually occurred around frame 8 or 9.

The thin film heat transfer coefficients and heating rates were calculated as follows:

First, the adiabatic wall temperature (T_{AW}) was determined. To obtain this, the ratio of adiabatic wall temperature to stagnation temperature was calculated by:

$$\frac{T_{AW}}{T_o} = .867 + .133\ (\sin \delta)^{1.55}$$

δ = angle between local surface and free stream flow, degrees

where $\delta = \alpha \pm \theta$. α is the angle of attack and θ is the surface deflection relative to the model centerline (usually zero).

Given T_o, T_{AW} was determined as follows:

$$T_{AW} = \frac{T_{AW}}{T_o} \times T_o$$

DATA REDUCTION - Continued

After T_{AW} was determined, the parameter $\bar{T}$ was calculated:

$$\bar{T} = \frac{T_{PC} - T_{IN}}{T_{AW} - T_{IN}}$$

With $\bar{T}$ calculated above, β_h was calculated by iterating the following expression:

$$1 - \bar{T} = e^2 (1 - \text{erf } \beta_h) \quad \text{where erf = error function}$$

Now using β_h determined above, the thin film heat transfer coefficient (h) was calculated:

$$h = \beta_h \frac{k \rho C_P}{t}$$

The aerodynamic heating rate ($\dot{q}$) was then determined by:

$$\dot{q} = h (T_{AW} - T_{PC})$$

The theoretical thin film heat transfer coefficients and stagnation point heating rates were calculated using the equations given below:

$$h_s = (.678) (C_P) (P_r^{-.6}) (\rho_w \mu_w)^{.1} (\rho_s \mu_s)^{.4} \frac{dVe}{dx}$$

Where:

$P_r = \frac{\mu C_P}{k}$ (μ, C_P and k for air)

and: $\frac{dVe}{dx} = \frac{1}{N_r} \left[2 R_g T_o \left(1 - \frac{1}{P_1 P_2}\right)\right]^{\frac{1}{2}}$ = velocity gradient

and:

$$P_1 = \frac{\gamma+1}{2} M_\infty^2 \quad \frac{\gamma}{\gamma-1}$$

$$P_2 = \frac{\gamma+1}{2\gamma M_\infty^2 - (\gamma-1)} \gamma^{\frac{1}{\gamma-1}}$$

The theoretical stagnation point heating rate $\dot{q}$ then:

$$\dot{q} = h_s (T_{AW} - T_{PC})$$

PHASE CHANGE PAINT DATA

The test results are shown in Figures 1 through 184 in the form of heating contours. These contours are correlated to heat transfer coefficient ratios (h/h_s), the ratio of local heat transfer coefficient on the model surface to the heat transfer coefficient at the stagnation point of a one-foot radius sphere at model scale. A list of the tunnel conditions for each run is presented in Table 5 in chronological order.

REFERENCES

1. Jones, R.A. and Hunt, T.L., "Use of Fusible Temperature Indicators for Obtaining Quantitative Aerodynamic Heat Transfer Data", NASA TR-R-230, February 1966

2. Carslan, H.S. and Jaeger, T.C. "Conduction of Heat in Solids", Oxford Clarenden Press, 1959

TABLE 1. MODEL MATERIAL PROPERTIES

T_{PC} (°F)	$\sqrt{k \rho C_p}_{TPC}$ (BTU/FT^2-SEC$^{0.5}$ - °F)*	
	Tests OH-42A	Tests OH-42B and C
150	.0466	-
156	-	.0513
175	.0472	.0515
200	.0478	.0525
250	.0489	.0529
275	.0493	.0537
300	.0496	.0546
350	.0500	.0557
400	.0503	.0570
450	-	.0580
500	.0506	.0592
550	-	.0604

*NOTE: The material properties listed above were calculated as follows:

$$\sqrt{k \rho C_p}\Big|_{T_{PC}} = \frac{\sqrt{k \rho C_p}\Big|_T + \sqrt{k \rho C_p}\Big|_{T_{IN}}}{2}$$

Where: $\sqrt{k \rho C_p}\Big|_T$ = Material property calculated at the Grumman Aerospace Corporations thermal laboratory for material wall temperature.

$\sqrt{k \rho C_p}\Big|_{T_{IN}}$ = Material property at T_{IN} (assumed to be 75°F).

TABLE 2 . DATA REDUCTION RECOVERY FACTORS

	Recovery Factor, T_{AW}/T_o	
Angle of Attack,	Windward View	Profile View
25	.900	.900
30	.910	.900
35	.920	.900
40	.932	.900

TABLE 3. MODEL DESIGNATIONS FOR SUMMARY SHEETS

46-1	=	Configuration #1
46-2	=	Configuration #2
46-3	=	Configuration #3
46-4	=	Configuration #4
46-4V	=	Configuration #4 + ventral fins
46-4EBF	=	Configuration #4 less ventral; plus elevons and body flap*
46-4BF	=	Configuration #4 body flap only*
46-4A	=	Second model Configuration #4
46-4ABF	=	4A plus body flap*
46-4AEBF	=	4ABF plus elevons*

* body flaps and elevons were tested at 10° on these configurations.

TABLE 4

PHASE CHANGE COATING TEST DATA SUMMARY SHEET

TEST TITLE: SPACE SHUTTLE ORBITER PHASE CHANGE PAINT TEST

TEST NUMBER: ØH42A TEST FACILITY: LRC/VDT

TEST DATE: 5/14/73 TEST ENGINEER: M. QUAN

Run No.	Model Configuration Identification	Model Scale	Free Stream Mach Number	Total Pressure (psig)	Total Temp. (°F)	Initial Temp. (°F)	RNX10⁶ Ft	Phase Change Temp. (°F)	Model Position (degrees)			Camera Location		
									α	β	Φ	Top	Side	
4084	46-4	.00593	8	620	900	76	3	300	30	0	0			
85				630	880	77	3	200						
86				1400	925	78	6	400						
87				1400	925	77	6	250						
88				1935	935	78	8	400						
89				163	750	81	1	150						
90				625	OIL	FLOW	3	—	↓					
91				1390	930	78	6	400	40					
92				1400	940	77	6	500						
93				150	760	81	1	200						
94	*			160	800	78	1	150						
95				160	OIL	FLOW	1	—	↓					
4096	↓	↓	↓	1395	900	78	6	400	35	↓	↓	↓	↓	

X axis parallel to stream (+downstream, -upstream)
Y axis (+right, -left, as viewed from the rear)
Z axis (+up, -down)

* NO TOP ISOTHERM DRAWN.

TEMP FORM DSM 349 EXP 4-19-73

TABLE 4 (CONTINUED)

PHASE CHANGE COATING TEST DATA SUMMARY SHEET

TEST TITLE: SPACE SHUTTLE ORBITER PHASE CHANGE PAINT TEST

TEST NUMBER: ØH42A TEST FACILITY: LRC/YDT

TEST DATE: 5/14/73 TEST ENGINEER: H. QUAN

Run No.	Model Configuration Identification	Model Scale	Free Stream Mach Number	Total Pressure (psig)	Total Temp. (°F)	Initial Temp. (°F)	RNX10⁶/Ft	Phase Change Temp. (°F)	Model Position (degrees)			Camera Location		
									α	β	Φ	TOP	SIDE	
4097	46-4	.00593	8	1385	925	79	6	200	35	0	0			
4098	↓	↓	↓	160	760	77	1	175	↓	↓	↓			
4099				160	OIL	FLOW	1	—						
4100				1420	985	81	6	350	25					
4101				1375	950	81	6	275	↓					
4102				160	735	82	1	150						
4103				170	OIL	FLOW	1	—						
4104				1390	910	78	6	300	30					
4105	↓	↓	↓	1940	970	82	8	350	↓	↓	↓	↓	↓	

X axis parallel to stream (+downstream, -upstream)

Y axis (+right, -left, as viewed from the rear)

Z axis (+up, -down)

TEMP FORM DSM 349 EXP 4-19-73

TABLE 4 (CONTINUED)

PHASE CHANGE COATING TEST DATA SUMMARY SHEET

TEST TITLE: SPACE SHUTTLE ORBITER PHASE CHANGE PAINT TEST

TEST NUMBER: ØH42B TEST FACILITY: LRC/VDT

TEST DATE: 5/24/73 TEST ENGINEER: W. DYE, M. QUAN

Run No.	Model Configuration Identification	Model Scale	Free Stream Mach Number	Total Pressure (psig)	Total Temp. (°F)	Initial Temp. (°F)	RNX10⁶/Ft	Phase Change Temp. (°F)	Model Position (degrees) α	β	Φ	Camera** Location (in) TOP	SIDE	
4130	46-1	.00593	8	1390	980	78	6	400	35	0	0			
4131	46-4A			625	910	74	3	300						
4132	46-2			1390	925	76	6	500						
4133	46-4A			635	880	78	3	250						
4134	46-2			625	875	75	3	300						
4135	46-2			154	765	77	1	175						
4136	46-2			1355	890	75	6	450						
4137	46-2			850	925	81	4	300	↓					
4138	*Ψ 46-4V			615	935	78	3	300	30					
4139	*Ψ 46-4V			625	925	75	3	350						
4140	46-4A			1615	930	75	7	350						
4141	46-2			635	875	76	3	300						
4142	46-4A	↓	↓	1120	925	76	5	300	↓	↓	↓	↓	↓	↓

X axis parallel to stream (+downstream, -upstream)
Y axis (+right, -left, as viewed from the rear)
Z axis (+up, -down)

* NO TOP ISOTHERM DRAWN

Ψ NO SIDE ISOTHERM DRAWN

EMP FORM DSM 349 EXP 4-19-73

TABLE 4 (CONTINUED)

PHASE CHANGE COATING TEST DATA SUMMARY SHEET

TEST TITLE: SPACE SHUTTLE ORBITER PHASE CHANGE PAINT TEST

TEST NUMBER: ØH 42B TEST FACILITY: LRC/VDT

TEST DATE: 5/24/73 TEST ENGINEER: W. DYE, M. QUAN

Run No.	Model Configuration Identification	Model Scale	Free Stream Mach Number	Total Pressure (psig)	Total Temp. (°F)	Initial Temp. (°F)	RNX10^6 Ft	Phase Change Temp. (°F)	Model Position (degrees)			Camera Location		
									α	β	Φ	Top	Side	
4143	46-2	.00593	8	1390	915	76	6	350	30	0	0			
4144	46-4A			165	760	75	1	175						
4145	46-2			1615	915	77	7	400						
4146	46-4A			1380	935	77	6	350						
4147	46-2			615	910	78	3	300						
4148	46-2			165	810	81	1	175						
4149	46-2			157	820	OIL	1	OIL						
4150	46-4ABF			635	900	79	3	350						
4151	46-2			1395	875	OIL	6	OIL						
4152	46-4ABF			1405	900	83	6	400						
4153	46-1			640	920	85	3	300						
4154	46-4ABF			160	795	84	1	200						
4155	46-4ABF	↓	↓	630	910	85	3	400	↓	↓	↓	↓	↓	

X axis parallel to stream (+downstream, -upstream)

Y axis (+right, -left, as viewed from the rear)

Z axis (+up, -down)

TEMP FORM DSM 349 EXP 4-19-73

TABLE 4. (CONTINUED)

PHASE CHANGE COATING TEST DATA SUMMARY SHEET

TEST TITLE: SPACE SHUTTLE ORBITER PHASE CHANGE POINT TEST

TEST NUMBER: ØH42B TEST FACILITY: LRC/VDT

TEST DATE: 5/24/73 TEST ENGINEER: W. DYE, M. QUAN

Run No.	Model Configuration Identification	Model Scale	Free Stream Mach Number	Total Pressure (psig)	Total Temp. (°F)	Initial Temp. (°F)	RNX10⁶ Ft	Phase Change Temp. (°F)	Model Position (degrees)			Camera Location		
									α	β	Φ	Top	Side	
4156	46-4ABF	.00593	8	1385	915	83	6	450	30	0	0			
4157	46-4ABF			630	880	014	3	—						
4158	46-1			163	780	86	1	175						
4159	46-3			620	920	86	3	300						
4160	46-1			160	805	86	1	156						
4161	46-3			165	800	84	1	175						
4162	46-1			1385	915	84	6	350						
4163	46-3			1385	870	85	6	350						
4164	46-3			635	955	83	3	250						
4165	46-1			640	930	83	3	250						
4166	46-3			1390	920	83	6	400						
4167	46-1			1625	885	83	7	400						
4168	46-3	↓	↓	1930	985	80	8	400	↓	↓	↓	↓	↓	

X axis parallel to stream (+downstream, -upstream)

Y axis (+right, -left, as viewed from the rear)

Z axis (+up, -down)

TEMP FORM DSM 349 EXP 4-19-73

TABLE 4. (CONTINUED)

PHASE CHANGE COATING TEST DATA SUMMARY SHEET

TEST TITLE: SPACE SHUTTLE ORBITER PHASE CHANGE PAINT TEST

TEST NUMBER: OH 42B TEST FACILITY: LRC/VDT

TEST DATE: 5/24/73 TEST ENGINEER: W. DYE, M. QUAN

Run No.	Model Configuration Identification	Model Scale	Free Stream Mach Number	Total Pressure (psig)	Total Temp. (°F)	Initial Temp. (°F)	RNX10⁶/Ft	Phase Change Temp. (°F)	Model Position (degrees) α	β	Φ	Camera Location Top	Side	
4169	46-1	.00593	8	157	755	OIL	1	—	30	0	0			
4170	46 3			155	765	OIL	1	—						
4171	46-1			1380	910	OIL	6	—						
4172	46-1			650	886	83	3	300	35					
4173	46-2			1390	915	82	6	350						
4174	46-1			158	780	83	1	175						
4175	46-1			1390	935	83	6	400						
4176	46-1			1380	915	83	6	350						
4177	46-4EBF			625	940	83	3	400	30					
4178	46-2			635	925	83	3	500						
4179	46-4AEBF			164	820	83	1	350						
4180	46-2			625	910	81	3	300						
4181	46-4AEBF			157	810	82	1	250						

X axis parallel to stream (+downstream, -upstream)
Y axis (+right, -left, as viewed from the rear)
Z axis (+up, -down)

TEMP FORM DSM 349 EXP 4-19-73

TABLE 4. (CONTINUED)

PHASE CHANGE COATING TEST DATA SUMMARY SHEET

TEST TITLE: SPACE SHUTTLE ORBITER PHASE CHANGE PAINT TEST

TEST NUMBER: ØH42B TEST FACILITY: LRC/NDT

TEST DATE: 5/24/73 TEST ENGINEER: W. DYE, M. QUAN

Run No.	Model Configuration Identification	Model Scale	Free Stream Mach Number	Total Pressure (psi.)	Total Temp. (°F)	Initial Temp. (°F)	RNX10⁶/Ft	Phase Change Temp. (°F)	Model Position (degrees)			Camera Location		
									α	β	Φ	TOP	SIDE	
4182	46-4AEBF	.00593	8	170	780	82	1	175	30	0	0			
4183	46-4AEBF	↓	↓	160	790	83	1	200	↓	↓	↓	↓	↓	
4184	46-4AEBF			635	910	79	3	350						
4185	46-4AEBF			640	890	81	3	250						
4186	46-4BF			630	890	80	3	450						
4187	46-4AEBF			625	900	OIL	3	OIL						
4188	46-4BF			675	890	80	3	250						
4189	46-4BF			625	885	82	3	550						
4190	46-4BF			630	895	82	3	500						
4191	46-5			164	805	80	1	250						
4192	46-5			157	795	81	1	200						
4193	46-5	↓	↓	625	910	82	3	350	↓	↓	↓	↓	↓	

X axis parallel to stream (+downstream, -upstream)

Y axis (+right, -left, as viewed from the rear)

Z axis (+up, -down)

TEMP FORM DSM 349 EXP 4-19-73

TABLE 4. (CONTINUED)

PHASE CHANGE COATING TEST DATA SUMMARY SHEET

TEST TITLE: SPACE SHUTTLE ORBITER PHASE CHANGE PAINT TEST

TEST NUMBER: ØH42C TEST FACILITY: LRC/VDT

TEST DATE: 6/14/73 TEST ENGINEER: W. DYE, J. CUMMINGS

Run No.	Model Configuration Identification	Model Scale	Free Stream Mach Number	Total Pressure (psi)	Total Temp. (°F)	Initial Temp. (°F)	RNX10⁶/Ft	Phase Change Temp. (°F)	Model Position (degrees) α	β	Φ	Camera Location Top	Side
4271	* Ψ 46-5	.00593	8	635	945	85	3	156	30	0	0		
4272	* Ψ 46-6			645	915	91	3	156					
4273	46-5			635	895	91	3	275					
4274	46-6			655	900	91	3	300					
4275	46-5			1395	920	89	6	400					
4276	46-6			620	950	90	3	350					
4277	* Ψ 46-5			1380	940	88	6	175					
4278	* Ψ 46-6			168	810	90	1	125					
4279	46-5			1395	940	92	6	300					
4280	46-6			160	785	89	1	200					
4281	46-5			640	915	OIL	3	—					
4282	46-6			635	915	OIL	3	—					
4283	46-6	↓	↓	160	788	83	1	250	↓	↓	↓	↓	↓

X axis parallel to stream (+downstream, -upstream)

Y axis (+right, -left, as viewed from the rear)

Z axis (+up, -down)

* NO TOP ISOTHERMS DRAWN

Ψ NO SIDE ISOTHERMS DRAWN

TEMP FORM DSM 349 EXP 4-19-73

TABLE 4. (CONCLUDED)

PHASE CHANGE COATING TEST DATA SUMMARY SHEET

TEST TITLE: SPACE SHUTTLE ORBITER PHASE CHANGE PAINT TEST

TEST NUMBER: 0L42C TEST FACILITY: LRC/VDT

TEST DATE: 6/14/73 TEST ENGINEER: W. DYE, J. CUMMINGS

Run No.	Model Configuration Identification	Model Scale	Free Stream Mach Number	Total Pressure (psi)	Total Temp. (°F)	Initial Temp. (°F)	RNX10^6 Ft	Phase Change Temp. (°F)	Model Position (degrees)			Camera Location		
									α	β	ϕ	Top	Side	
4284	46-6	.00593	8	1400	920	85	6	350	30	0	0			
4285	*Ψ 46-6			1390	910	89	6	175	↓					
4286	46-5			155	730	87	1	250	35					
4287	46-6			152	760	82	1	250						
4288	46-5			625	875	84	3	350					↓	
4289	46-6			640	925	84	3	300						
4290	* 46-5			160	785	81	1	125						
4291	* 46-5			650	915	85	3	156						
4292	46-5			1400	925	89	6	350	↓					
4293	46-5			160	760	84	1	156	25					
4249	46-5			630	895	85	3	200						
4295	46-5	↓	↓	1390	920	84	6	300	↓	↓	↓	↓		

X axis parallel to stream (+downstream, -upstream)

Y axis (+right, -left, as viewed from the rear)

Z axis (+up, -down)

* NO TOP ISOTHERMS DRAWN

Ψ NO SIDE ISOTHERMS DRAWN

TEMP FORM DSM 349 EXP 4-19-73

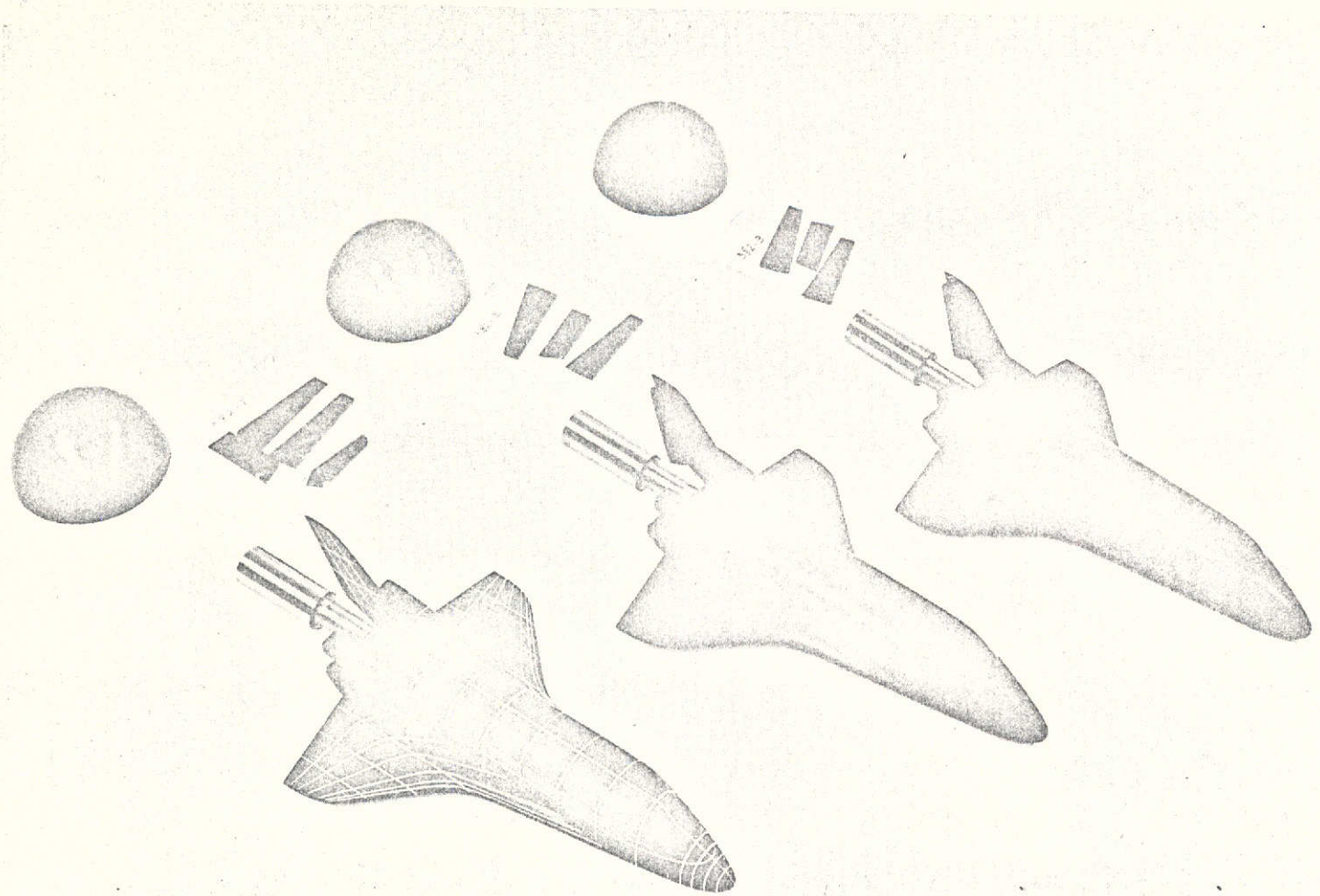

Photograph 1. - Model #46-0 Configuration #1 SS-H-00382-1, -2, and -3.

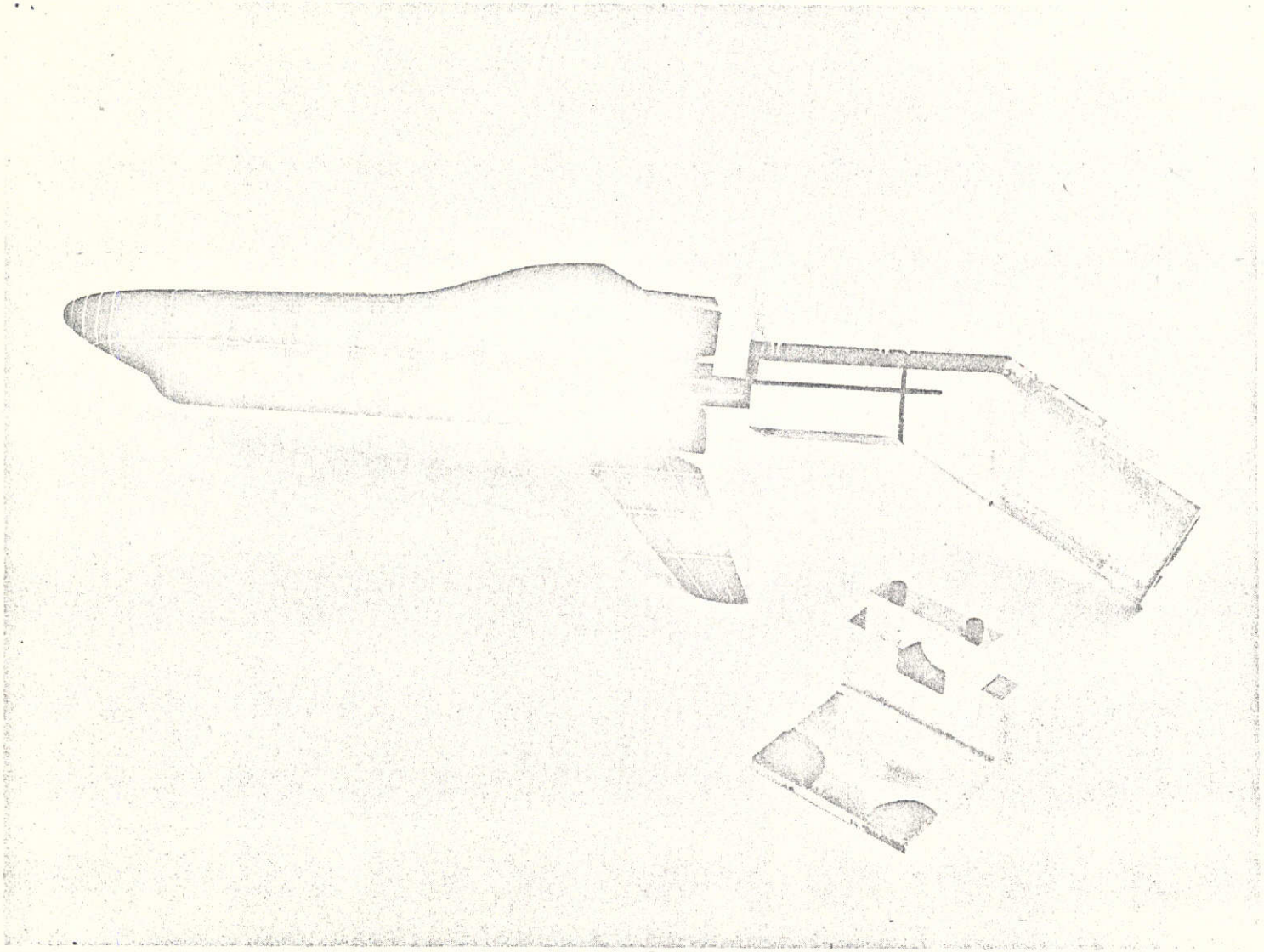

Photograph 2. - Paint Stripe - Model 46-0, Configuration #1 SS-H-00382-1.

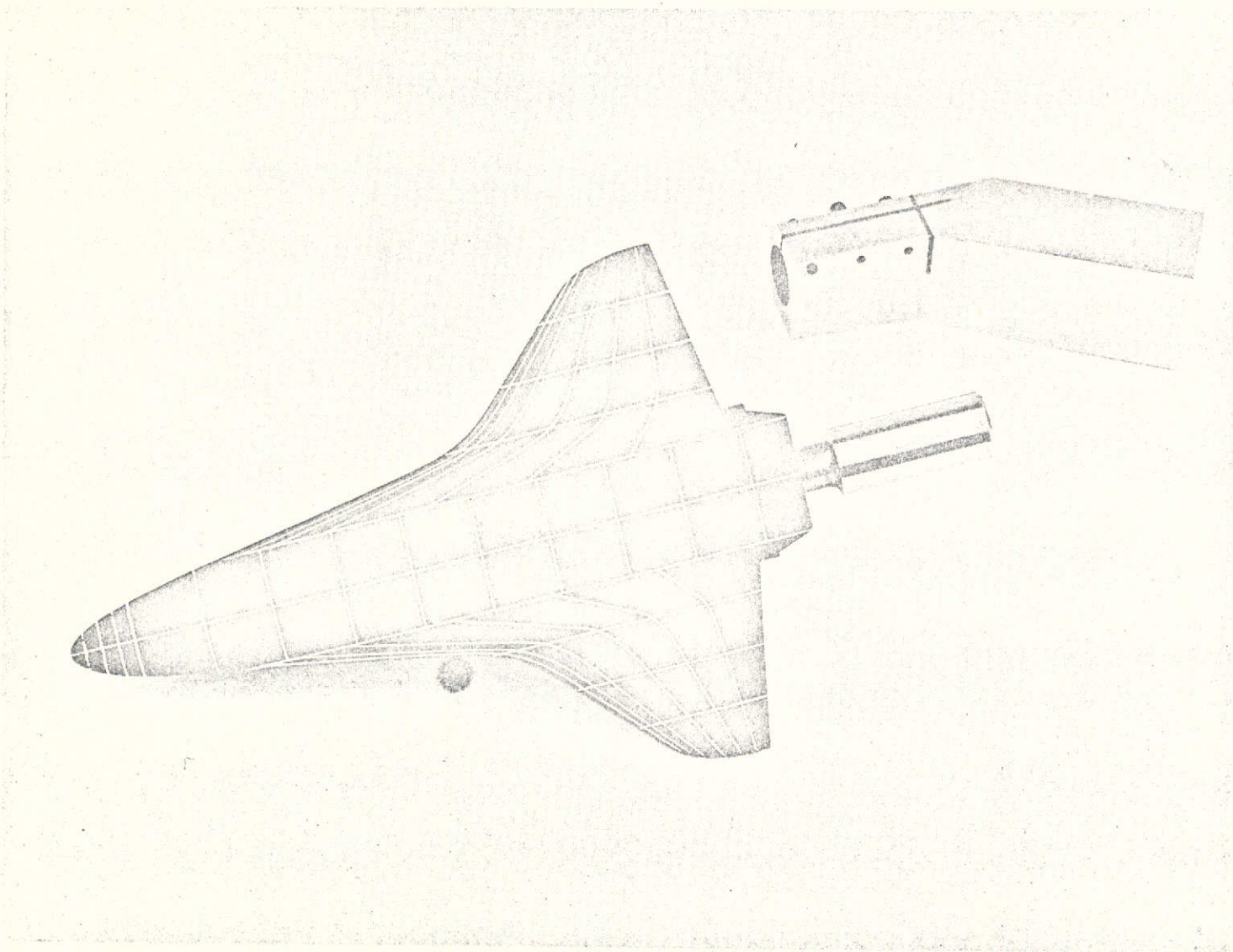

Photograph 3. - Paint Stripe - Model 46-0, Configuration #1 SS-H-00382-1.

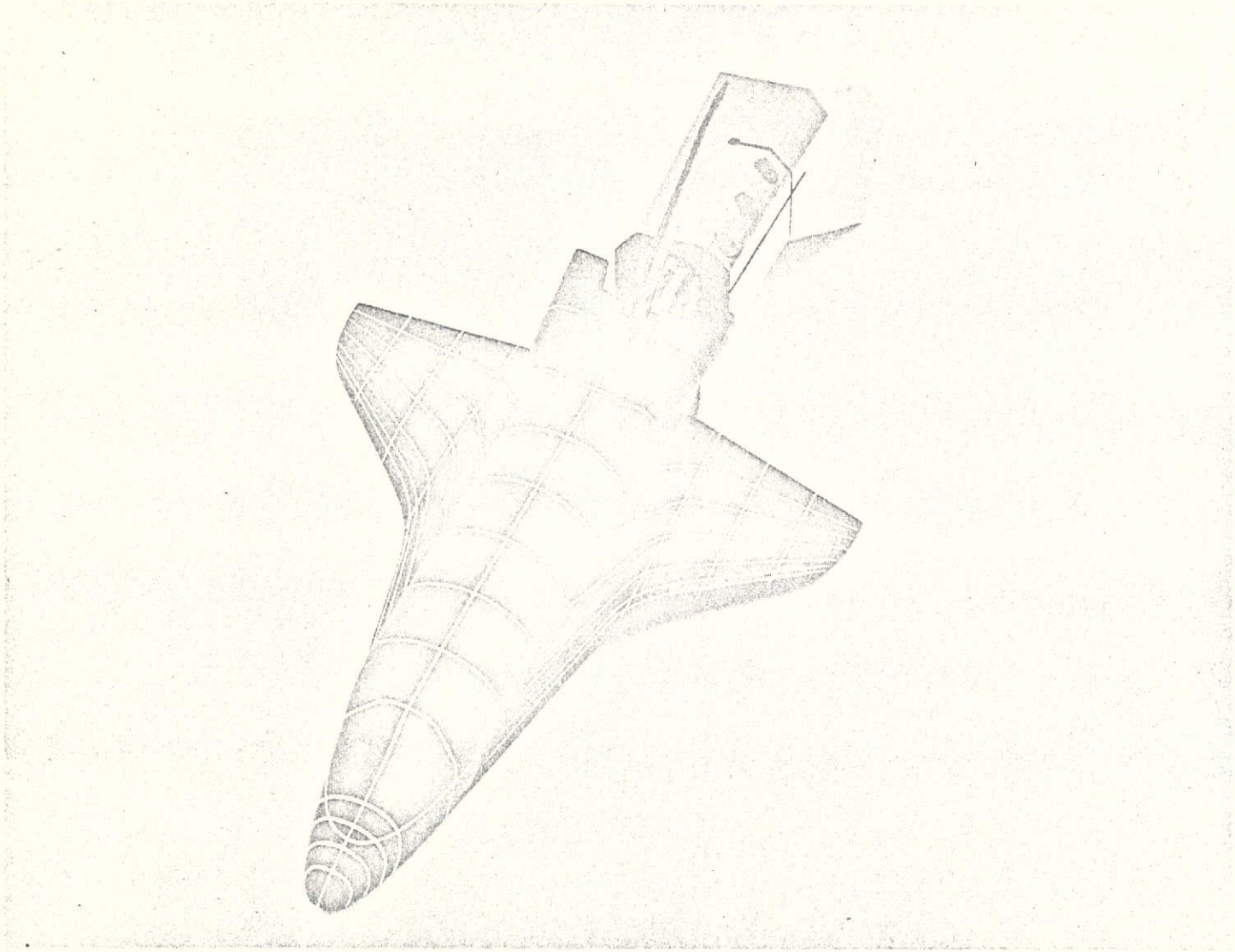

Photograph 4. - Paint Stripe - Model 46-0, Configuration #1 SS-H-00382-1.

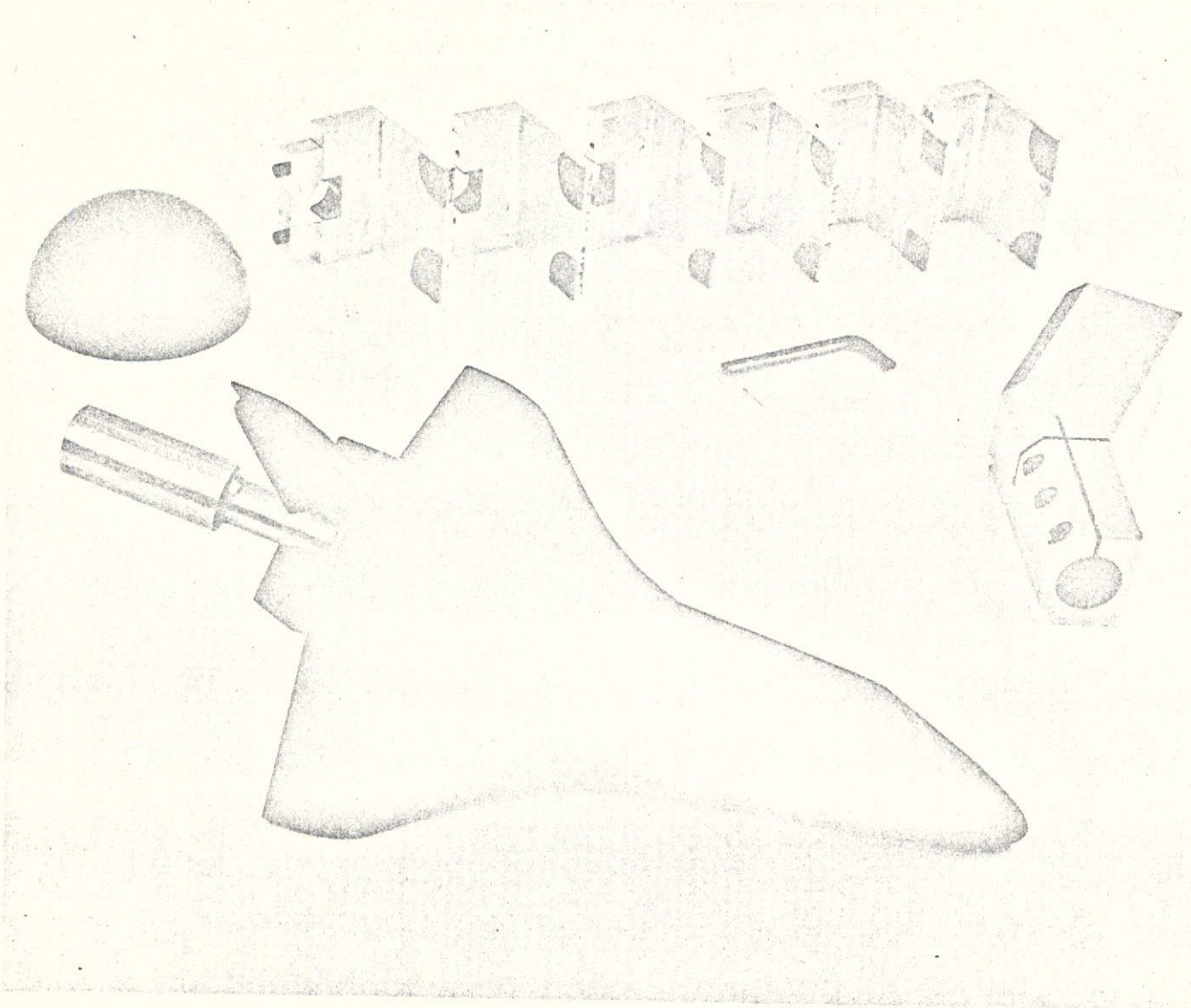

Photograph 5. - Model #46-0, Configuration #2 SS-H-00383-2.

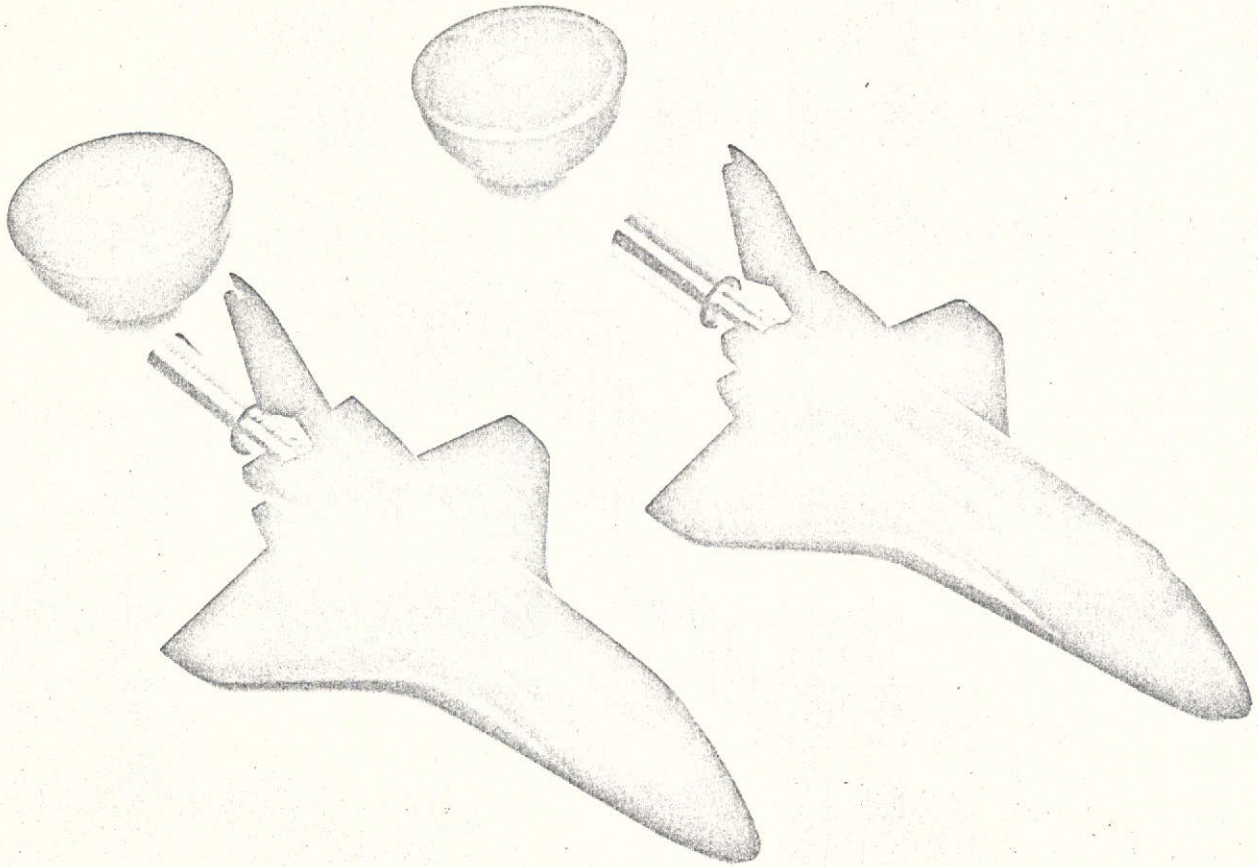

Photograph 6. - Model #46-0, Configurations #3 and #5 SS-H-00381-3 and -5.

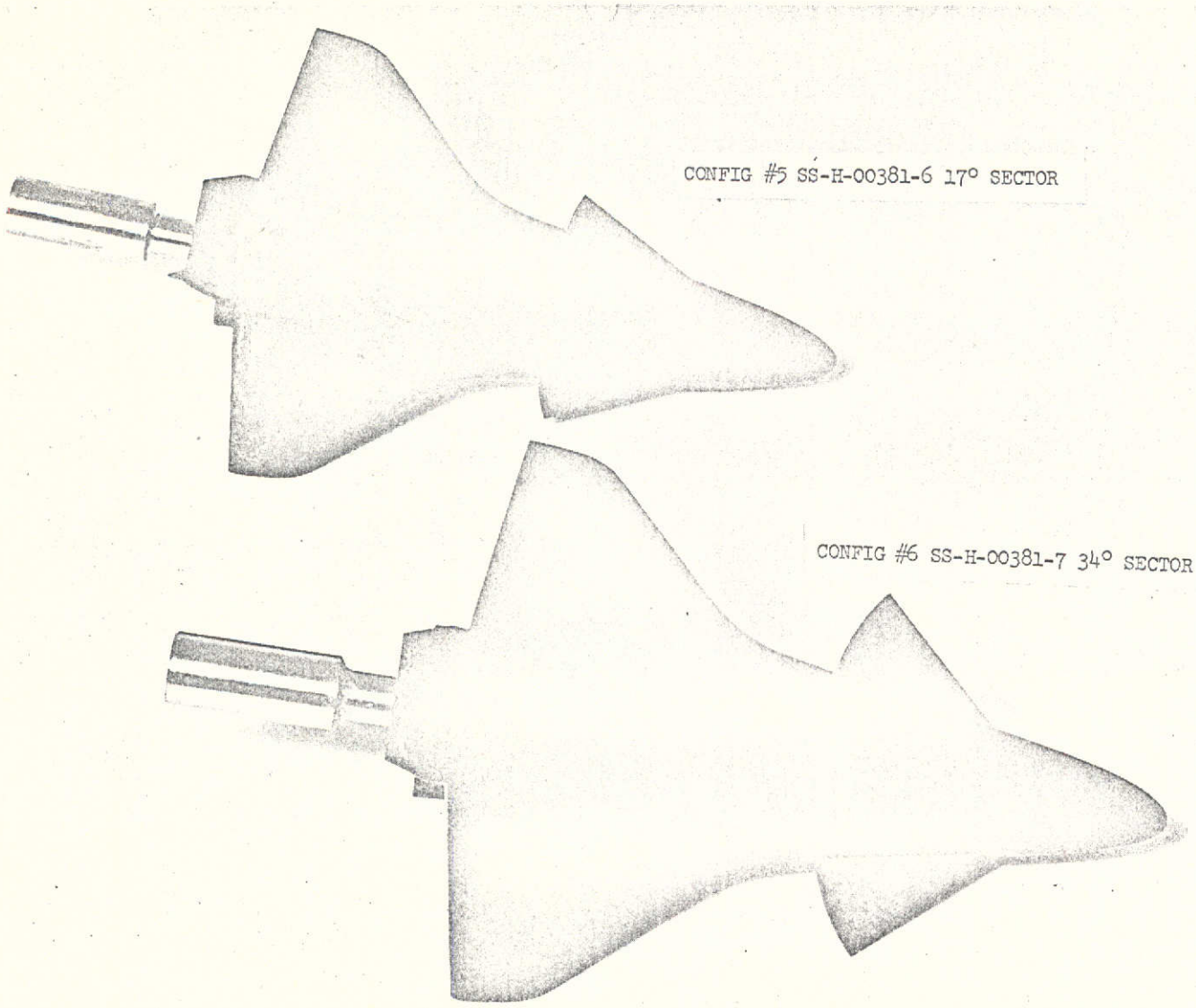

Photograph 7. - Model #46-0, Configurations #5 and #6.

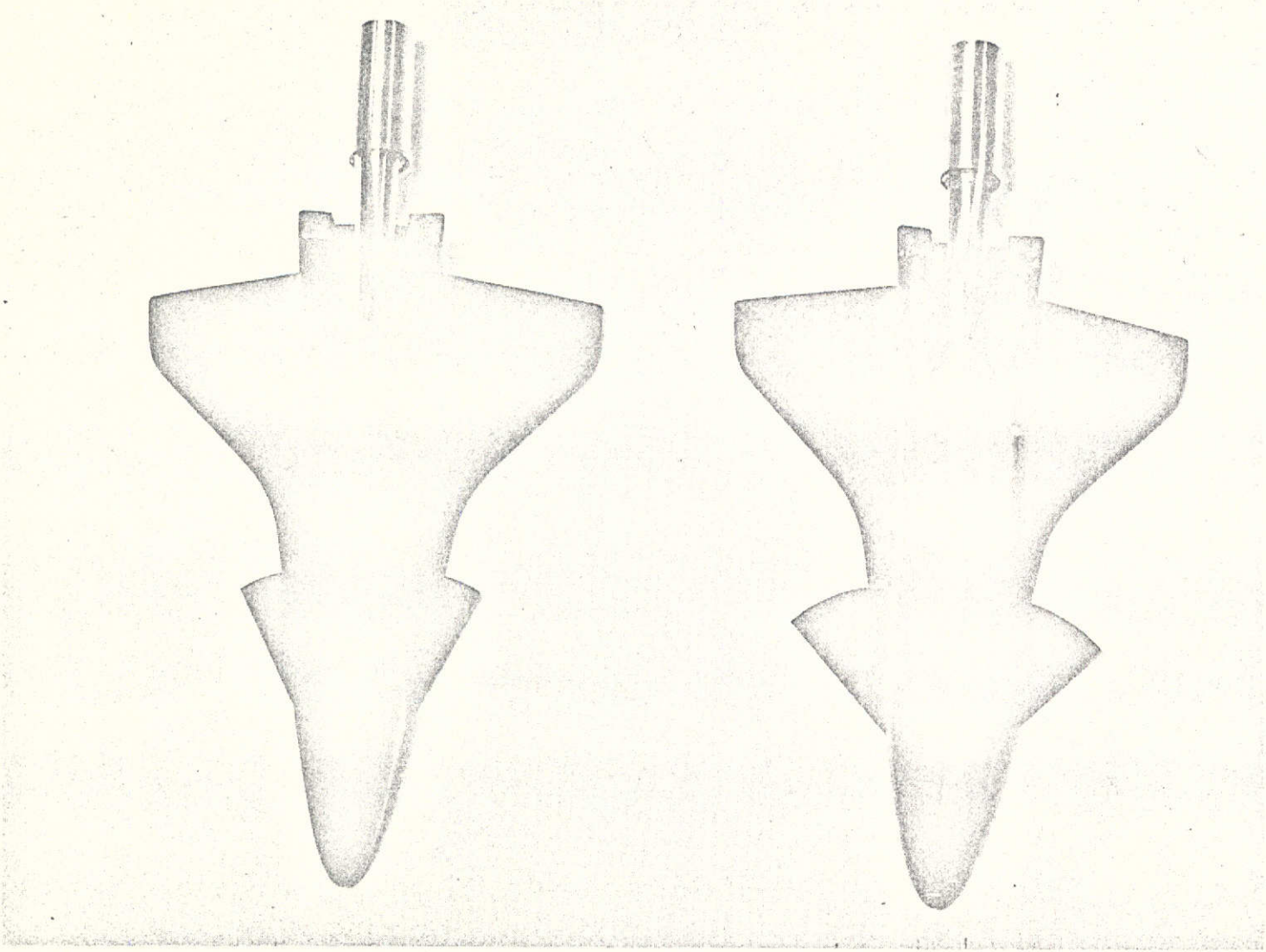

Photograph 8. - Model #46-0, Configurations #5 and #6.

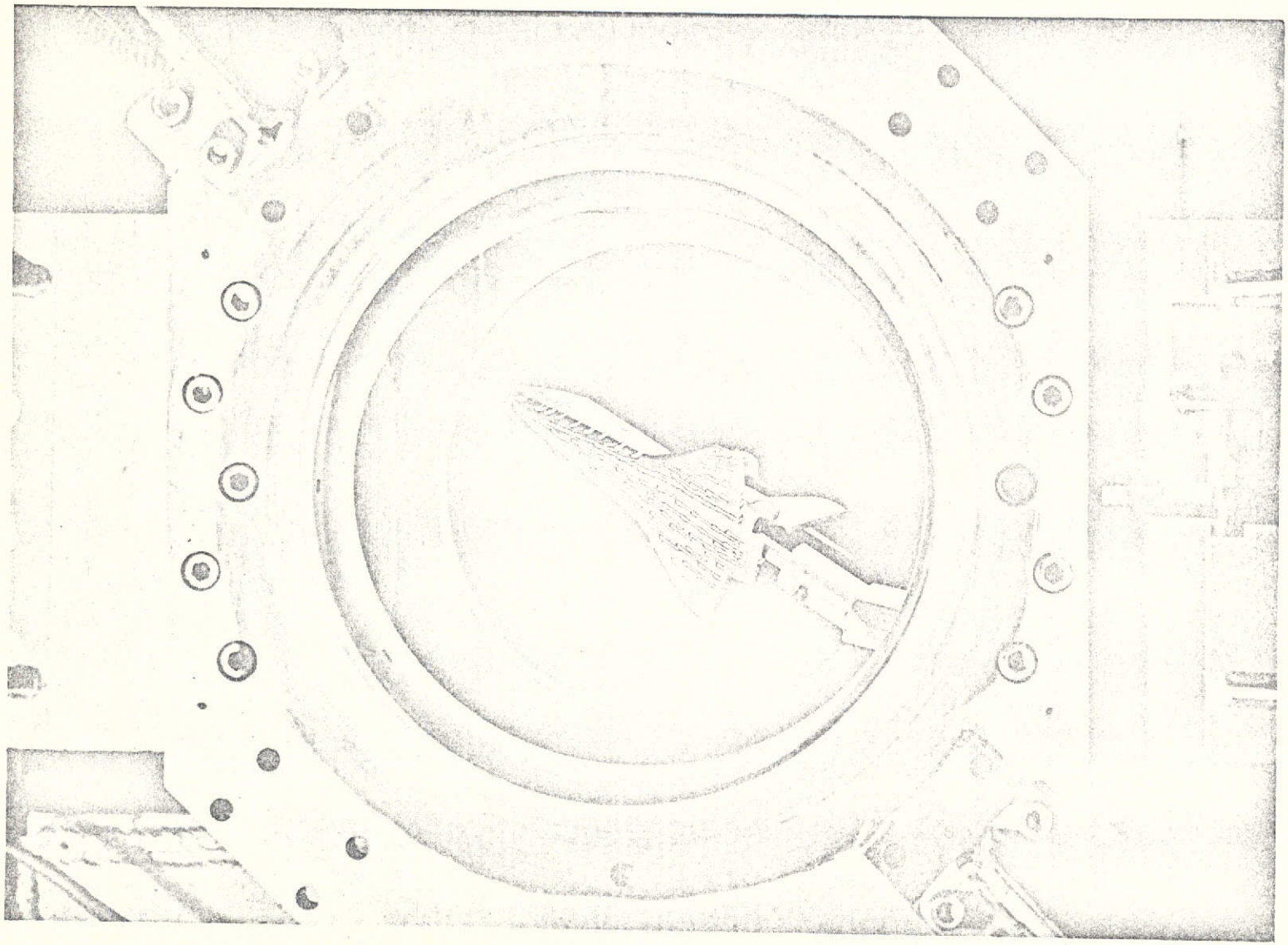

Photograph 9. - OH42A Oil Flow.

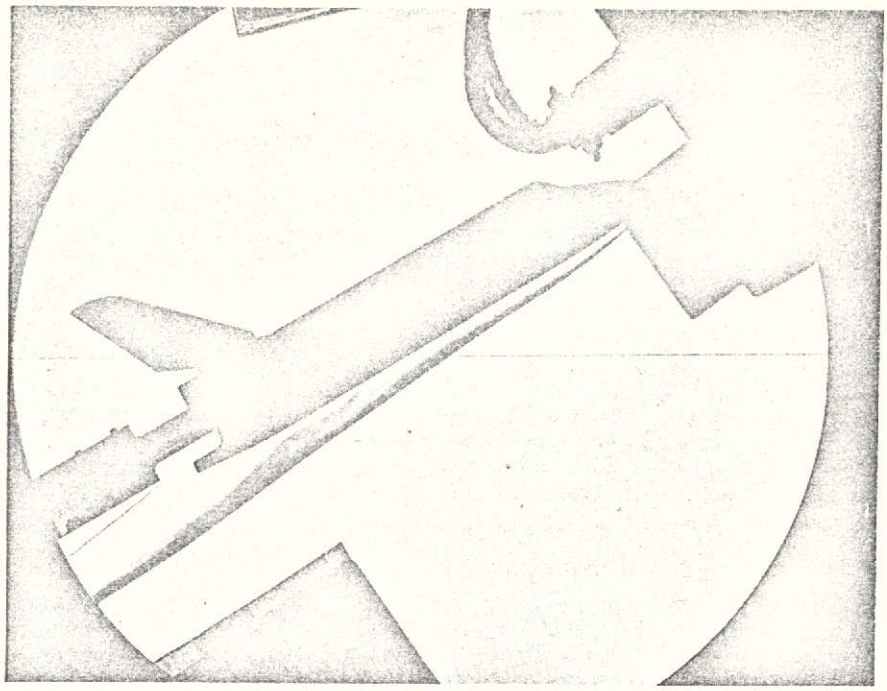

Photograph 10. - Model #46-4, α = 30°, Re/ft = 5 x 10^6, Run 4142.

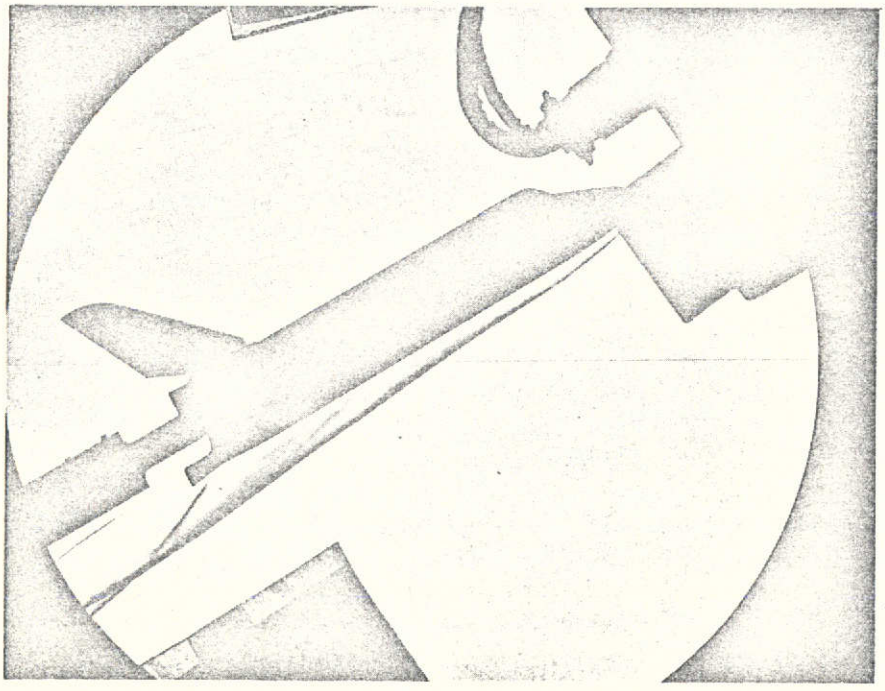

Photograph 11. - Model #46-4BF, α = 30°, Re/ft = 3 x 10^6, Run 4150.

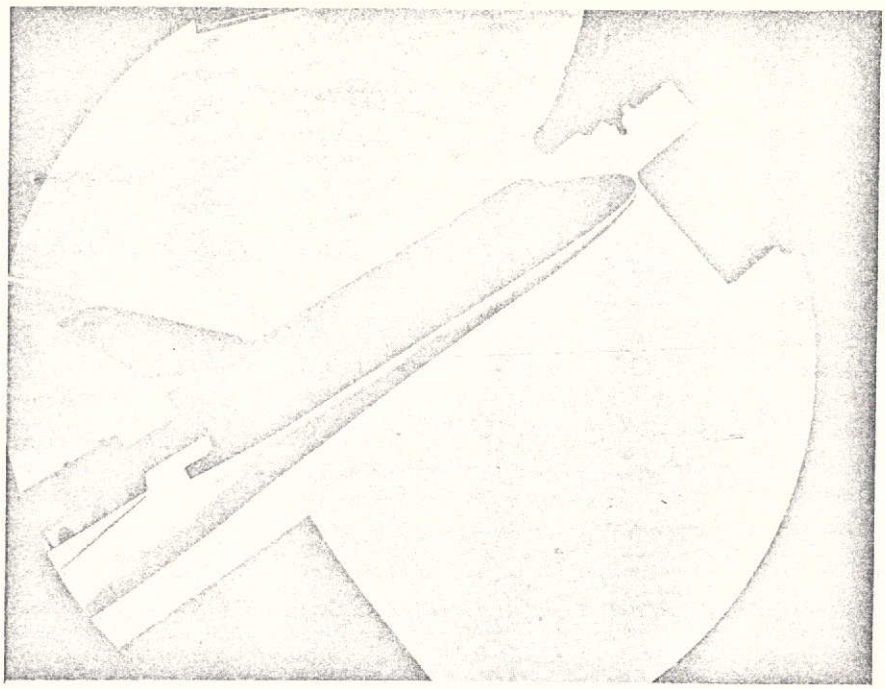

Photograph 12. - Model #46-5 (17° Trimmer) α = 30°, Re/ft = 3 x 10^6, Run 4273.

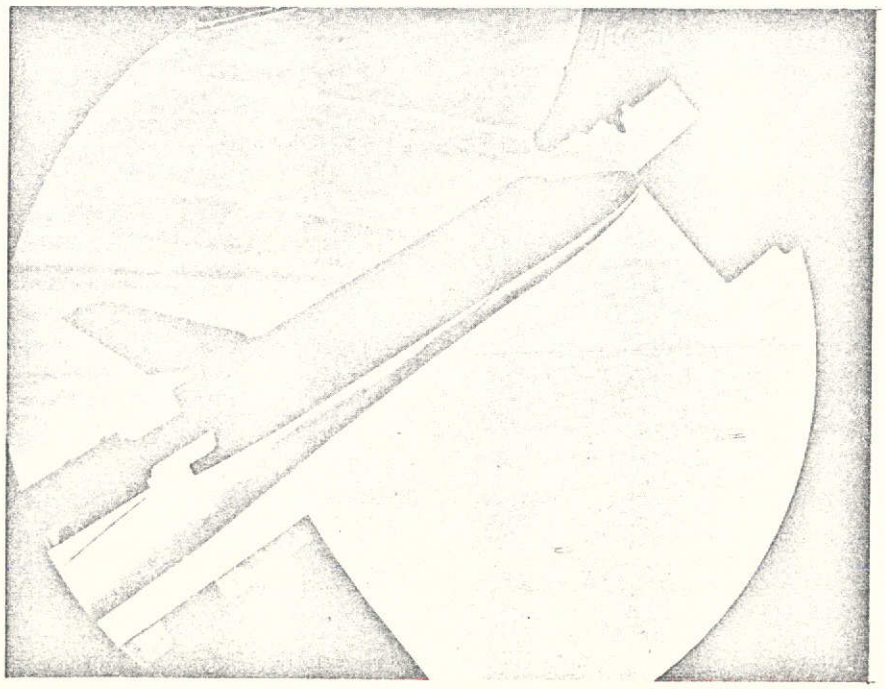

Photograph 13. - Model #46-6 (34° Trimmer) α = 30°, Re/ft = 3 x 10^6, Run 4274.

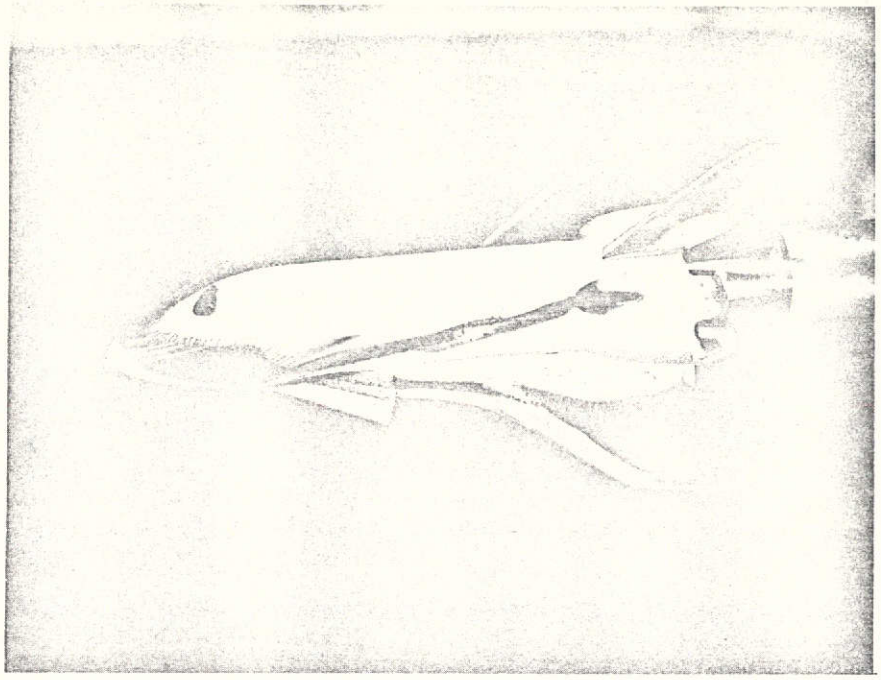

Photograph 14. - Model #46-5, α = 30°, Re/ft = 3 x 10^6, 15° Paint, Run 4271, Tpc = 156°F.

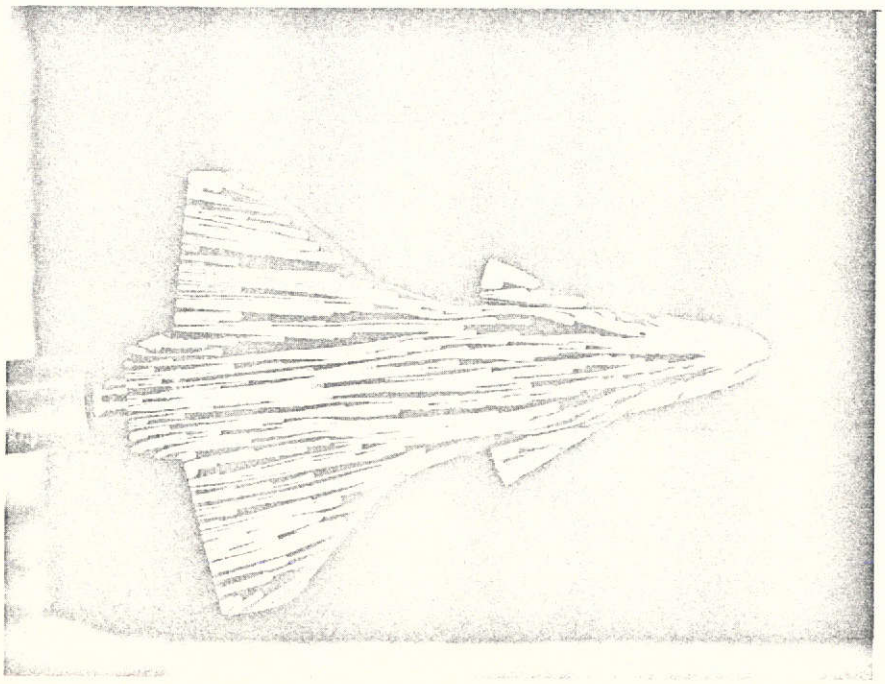

Photograph 15. - Model #46-5, α = 30°, Re/ft = 3 x 10^6, Oil Flow, Run 4281.

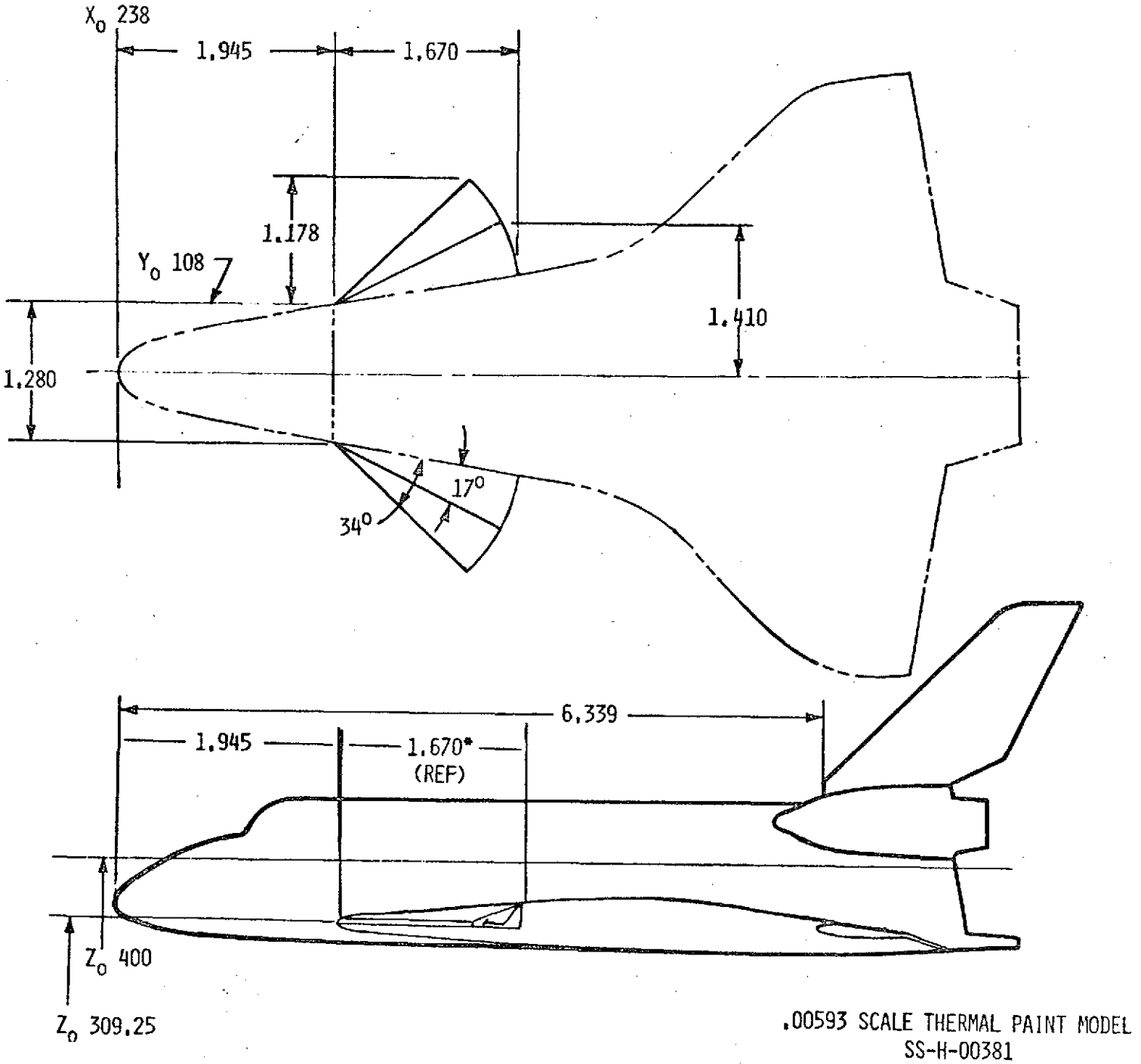

(Dimensions are inches unless noted otherwise)

Sketch 16. - Model 46-0 Configurations (#1 through #6).

DATA FIGURES

PHASE CHANGE TEST

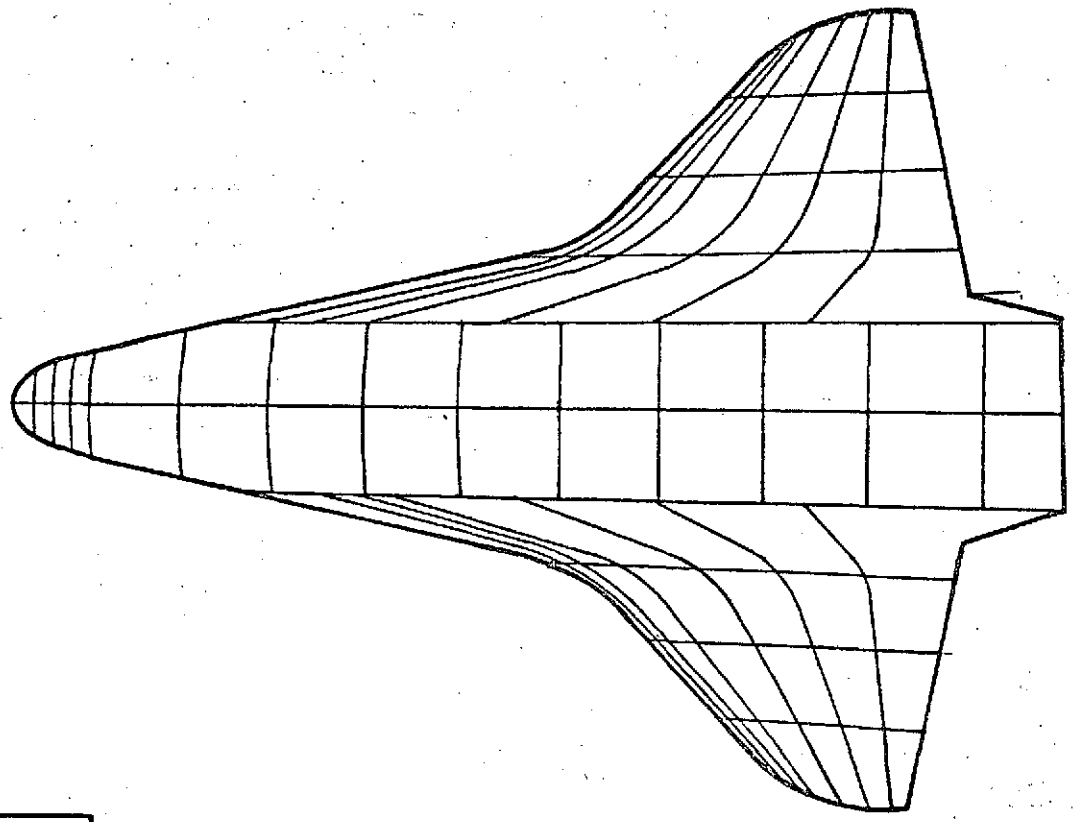

Isotherm	$h/h_{r=1'}$
1	
2	
3	
4	
5	
6	
7	
8	
9	
10	

FIG 1

CONFIG.

LENGTH (ft) =

SCALE .00593

FACILITY LRC/VDT

TEST GRID

RUN 4130 to 4137

M_∞ =

P_{total} (psia) =

T_{total} (°R) =

T_{aw}/T_{total} =

R_N per foot =

$T_{phase\ change}$ (°F) =

α = 35°

β =

ϕ =

Camera Coordinates (from model center, x-axis parallel w/ stream, + downstream)

x (in) =

y (in) =

z (in) =

PHASE CHANGE TEST

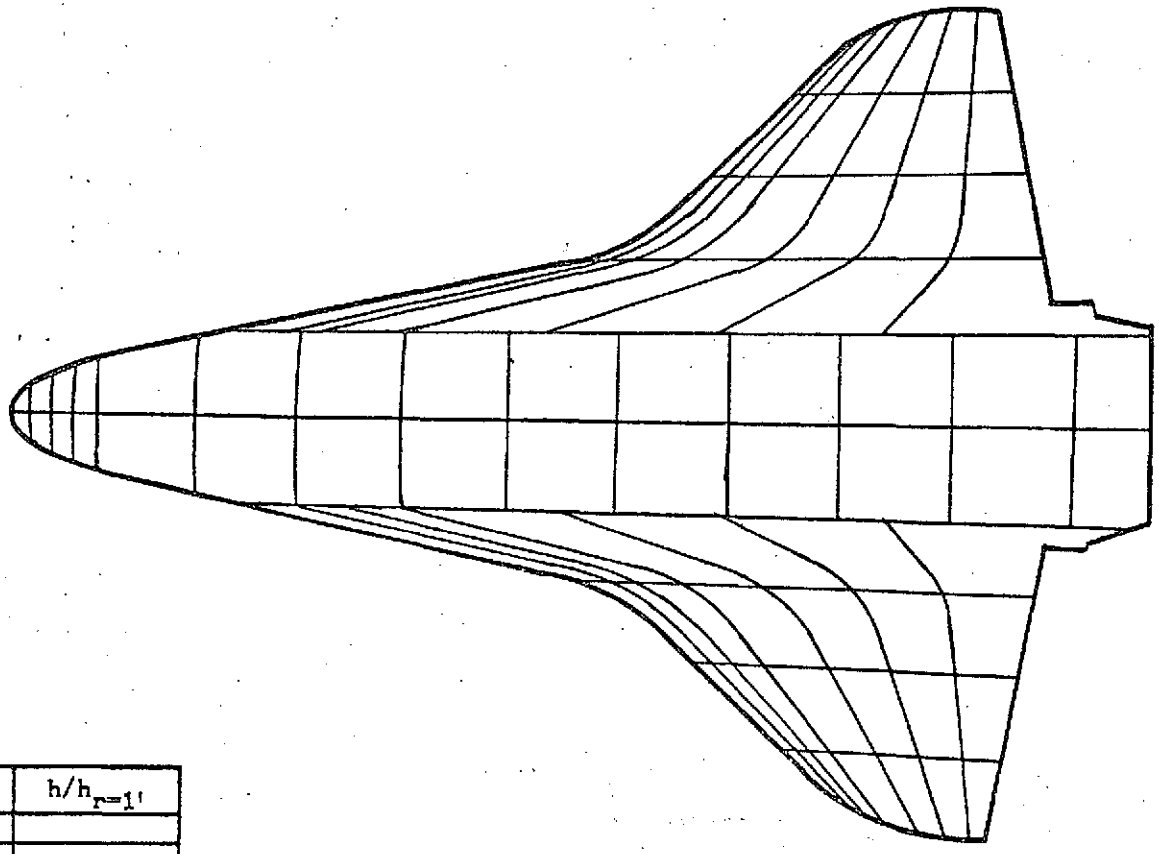

Isotherm	$h/h_{r=1'}$
1	
2	
3	
4	
5	
6	
7	
8	
9	
10	

FIG 2

CONFIG.

LENGTH (ft) =

SCALE .00593

FACILITY LRC/VDT

TEST GRID

RUN 4138 to 4171

M_∞ =

P_{total} (psia) =

T_{total} (°R) =

T_{aw}/T_{total} =

R_N per foot =

$T_{phase\ change}$ (°F) =

α = 30°

β =

ϕ =

Camera Coordinates (from model center, x-axis parallel w/ stream, + downstream)

x (in) =

y (in) =

z (in) =

WED

Runs 4138-4171 HVD-EVCS

PHASE CHANGE TEST

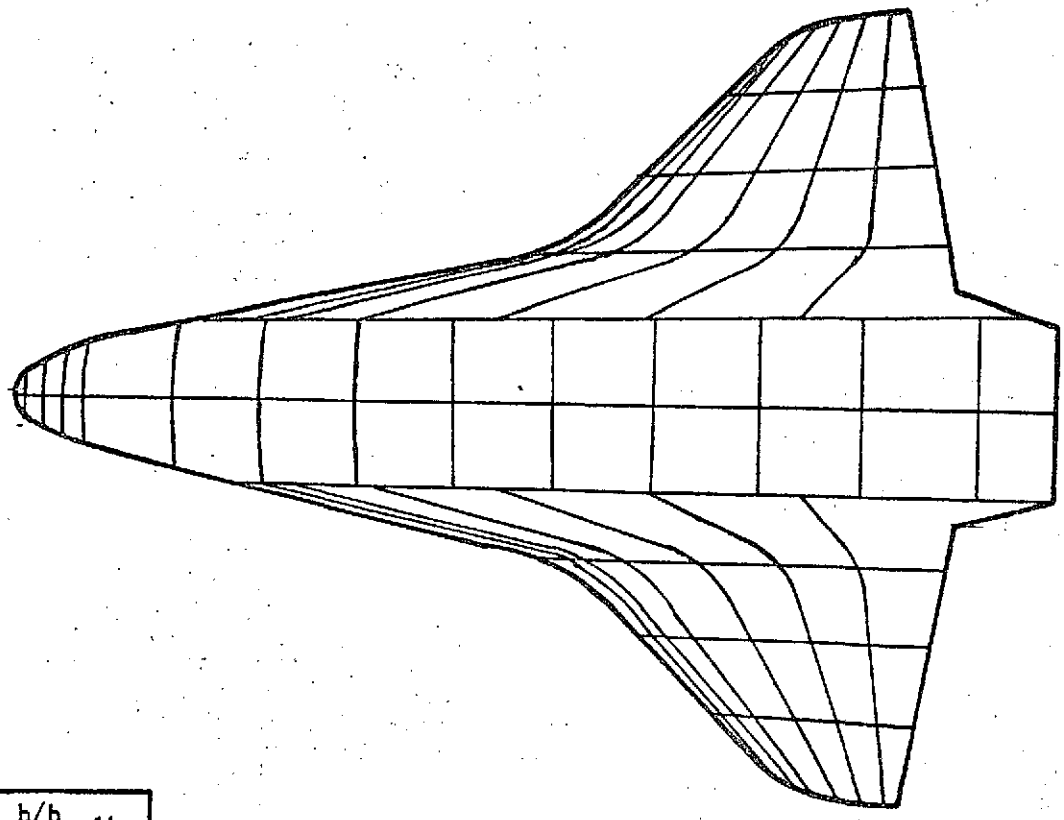

Isotherm	$h/h_{r=1'}$
1	
2	
3	
4	
5	
6	
7	
8	
9	
10	

FIG. 3

CONFIG.

LENGTH (ft) =

SCALE .00593

FACILITY LRC/VDT

TEST OH42-GRID

RUN 4172 to 4176

M_∞ =

P_{total} (psia) =

T_{total} (°R) =

T_{aw}/T_{total} =

R_N per foot =

$T_{phase\ change}$ (°F) =

α = 35°

β =

ϕ =

Camera Coordinates (from model center, x-axis parallel w/ stream, + downstream)

x (in) =

y (in) =

z (in) =

P.D.S

EVD-EVCS

NASA Langley (Feb 1971)

PHASE CHANGE TEST

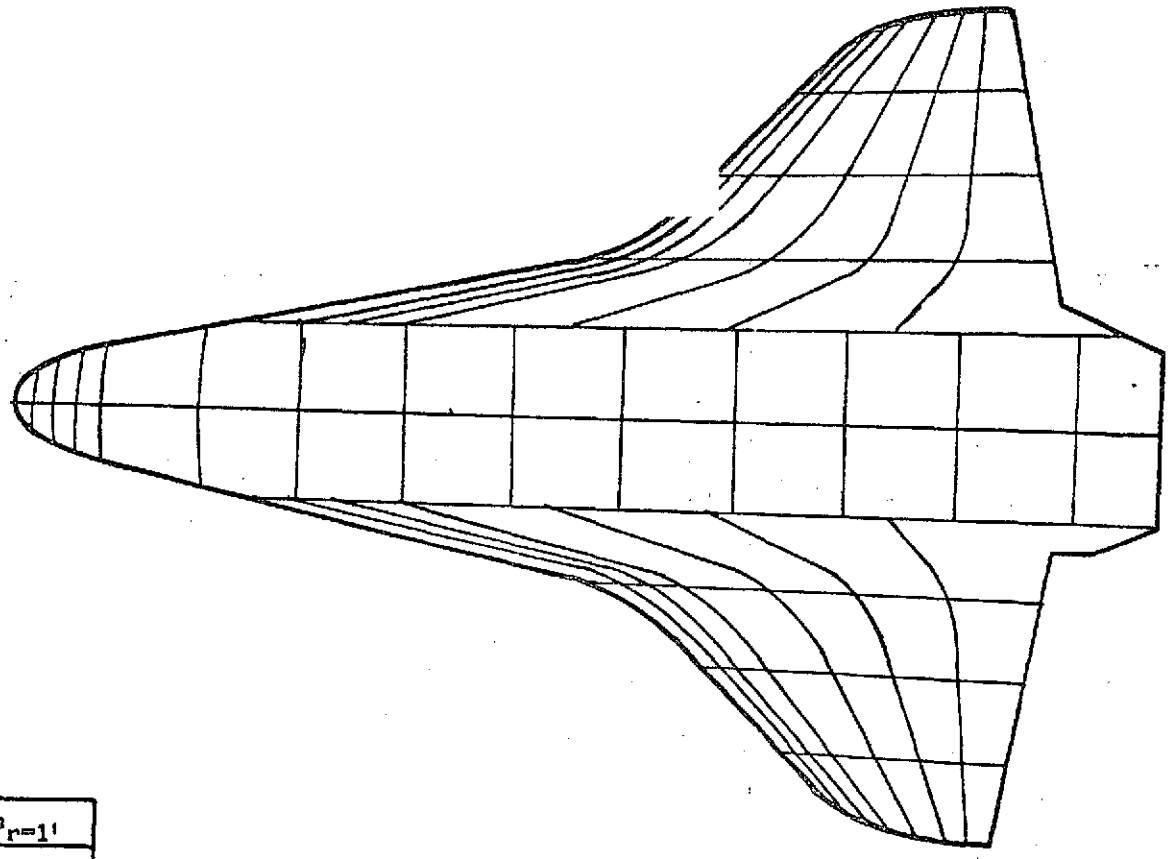

Isotherm	$h/h_{r=1'}$
1	
2	
3	
4	
5	
6	
7	
8	
9	
10	

FIG. 4

CONFIG.

LENGTH (ft) =

SCALE .00593

FACILITY LRC/VDT

TEST ØH42

RUN 4177 to 4193

M_∞ =

P_{total} (psia) =

T_{total} (°R) =

T_{aw}/T_{total} =

R_N per foot =

$T_{phase\ change}$ (°F) =

α = 30°

β =

ϕ =

Camera Coordinates (from model center, x-axis parallel w/ stream, + downstream)

x (in) =

y (in) =

z (in) =

PHASE CHANGE TEST

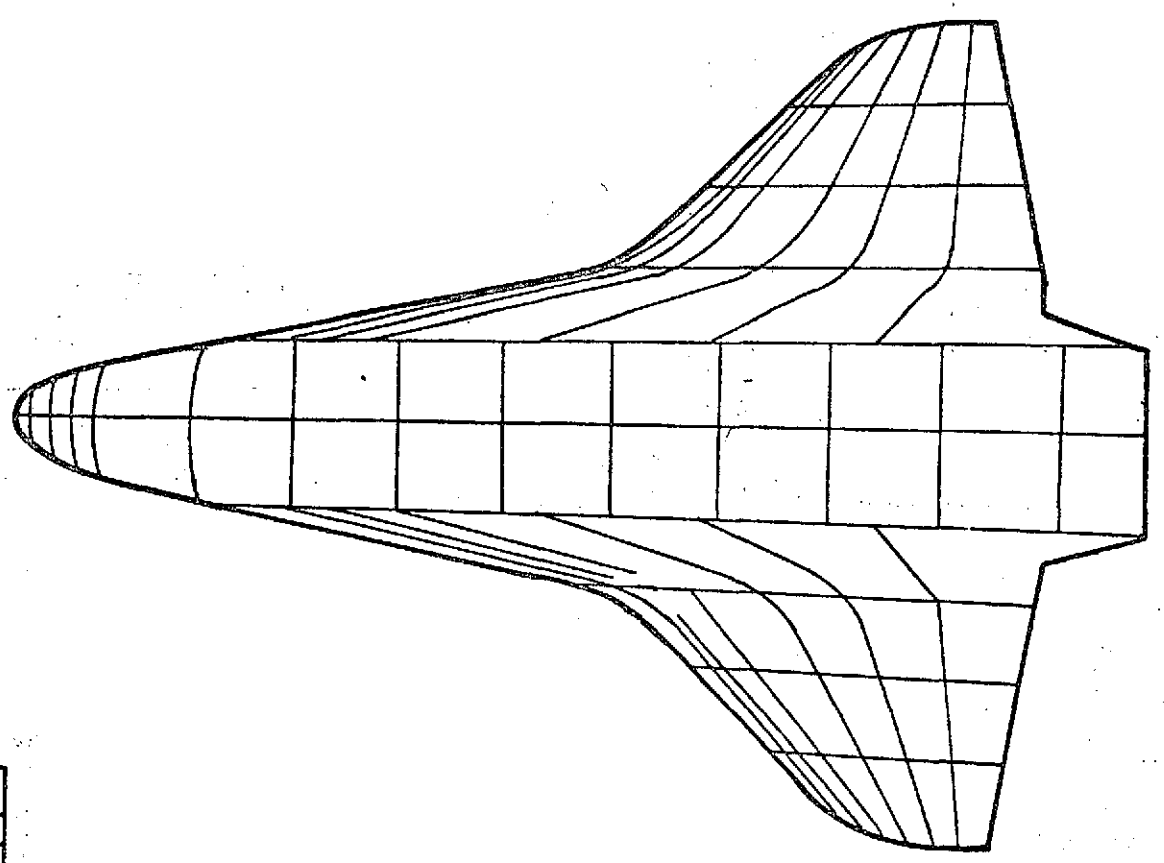

Isotherm	$h/h_{r=1'}$
1	
2	
3	
4	
5	
6	
7	
8	
9	
10	

FIG. 5

CONFIG.

LENGTH (ft) =

SCALE .00593

FACILITY LRC/VDT

TEST ØH42 GRID

RUN 4271 to 4285

M_∞ =

P_{total} (psia) =

T_{total} (°R) =

T_{aw}/T_{total} =

R_N per foot =

$T_{phase\ change}$ (°F) = 156

$\alpha = 30°$

β =

ϕ =

Camera Coordinates (from model center, x-axis parallel w/ stream, + downstream)

x (in) =

y (in) =

z (in) =

Runs 4271 to 4278

HVD-EVCS

PHASE CHANGE TEST

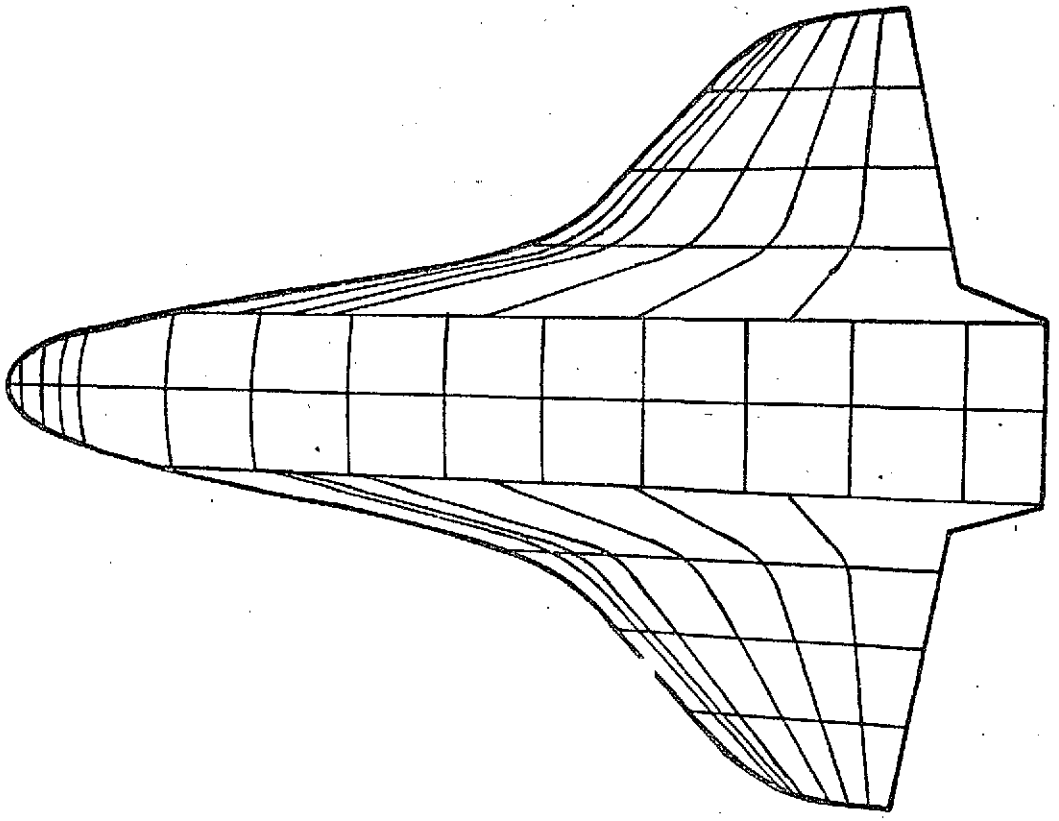

Isotherm	$h/h_{r=1'}$
1	
2	
3	
4	
5	
6	
7	
8	
9	
10	

CONFIG.

LENGTH (ft) =

SCALE

FACILITY

TEST OH4Z - GRID

RUN 4286 to 4292

M_∞ =

P_{total} (psia) =

T_{total} (°R) =

T_{aw}/T_{total} =

R_N per foot =

$T_{phase\ change}$ (°F) =

α = 35°

β =

ϕ =

Camera Coordinates (from model center, x-axis parallel w/ stream, + downstream)

x (in) =

y (in) =

z (in) =

FIG. 6

PHASE CHANGE TEST

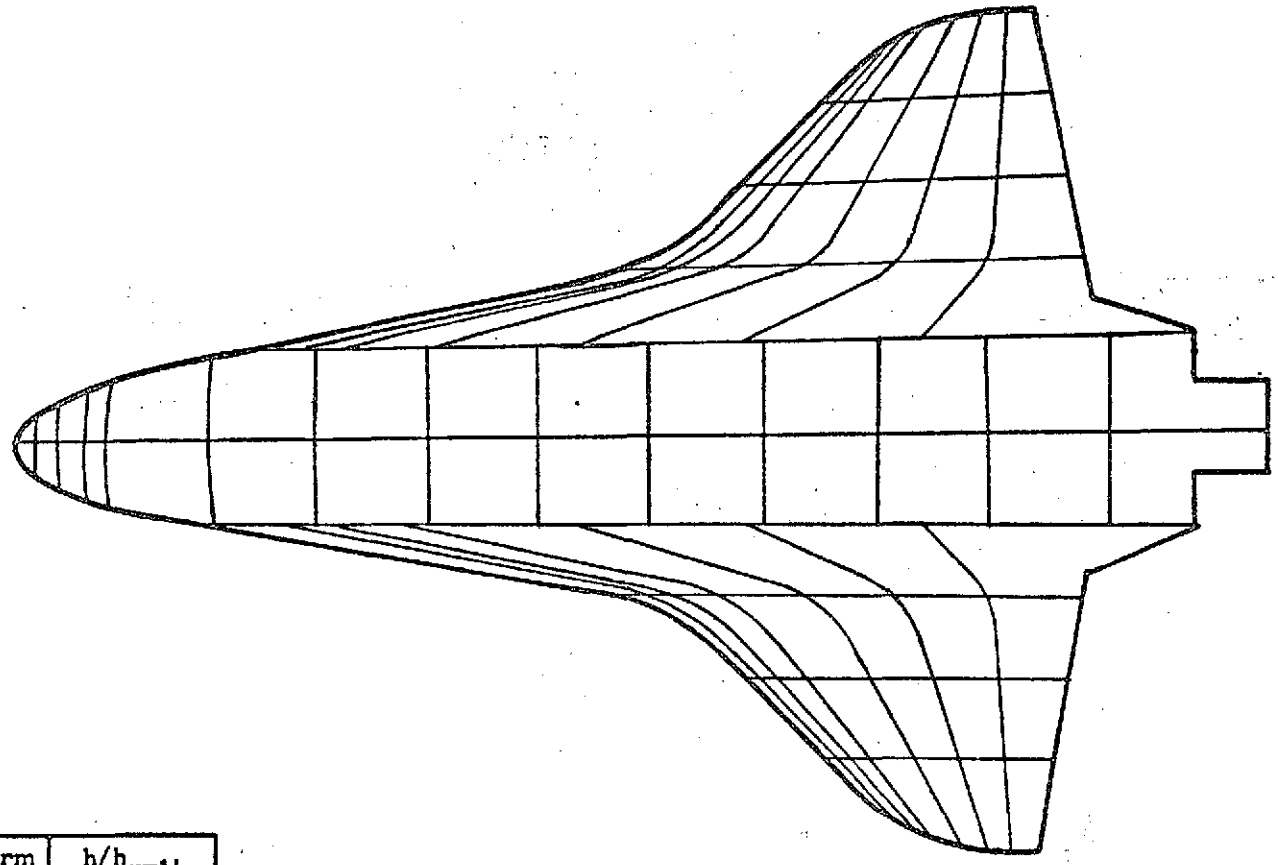

Isotherm	$h/h_{r=1'}$
1	
2	
3	
4	
5	
6	
7	
8	
9	
10	

FIG. 7

CONFIG.

LENGTH (ft) =

SCALE .00593

FACILITY LRC/VDT

TEST OH42

RUN GRID 4293 to 4295

M_∞ =

P_{total} (psia) =

T_{total} (°R) =

T_{aw}/T_{total} =

R_N per foot =

$T_{phase\ change}$ (°F) =

α = 25°

β =

ϕ =

Camera Coordinates (from model center, x-axis parallel w/ stream, + downstream)

x (in) =

y (in) =

z (in) =

PHASE CHANGE TEST

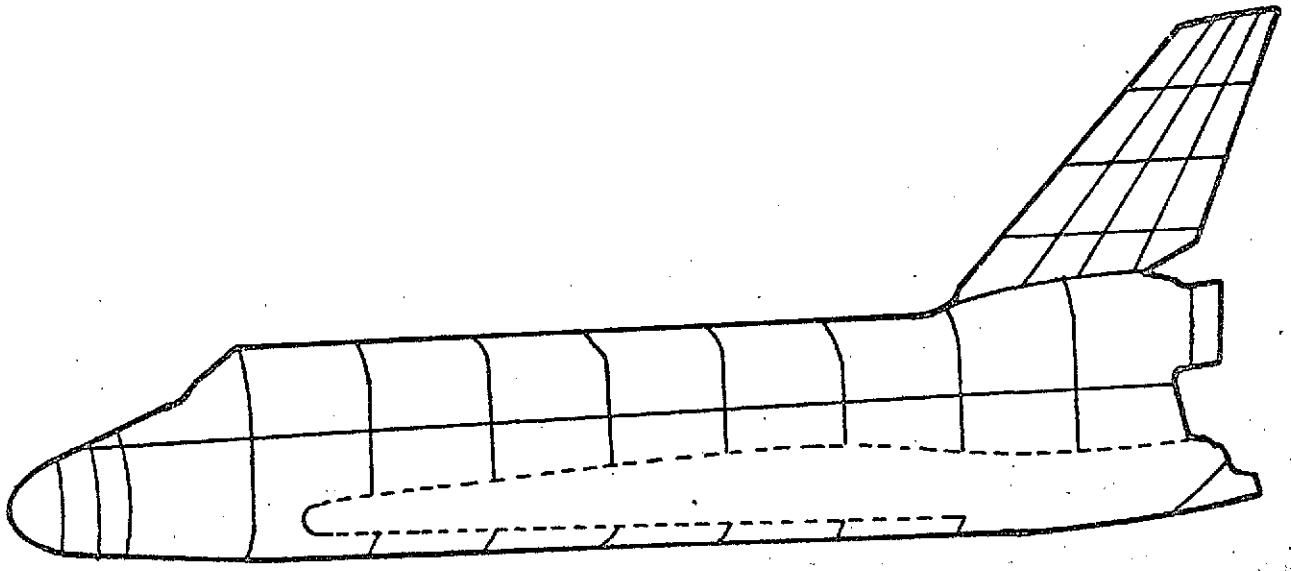

Isotherm	$h/h_{r=1'}$
1	
2	
3	
4	
5	
6	
7	
8	
9	
10	

FIG. 8

CONFIG.

46 - 1

LENGTH (ft) =

SCALE .00593

FACILITY LRC/VDT

TEST OH42

RUN 4130 to 4137

M_∞ =

P_{total} (psia) =

T_{total} (°R) =

T_{aw}/T_{total} =

R_N per foot =

$T_{phase\ change}$ (°F) =

α = 35°

β =

ϕ =

Camera Coordinates (from model center, x-axis parallel w/ stream, + downstream)

x (in) =

y (in) =

z (in) =

PHASE CHANGE TEST

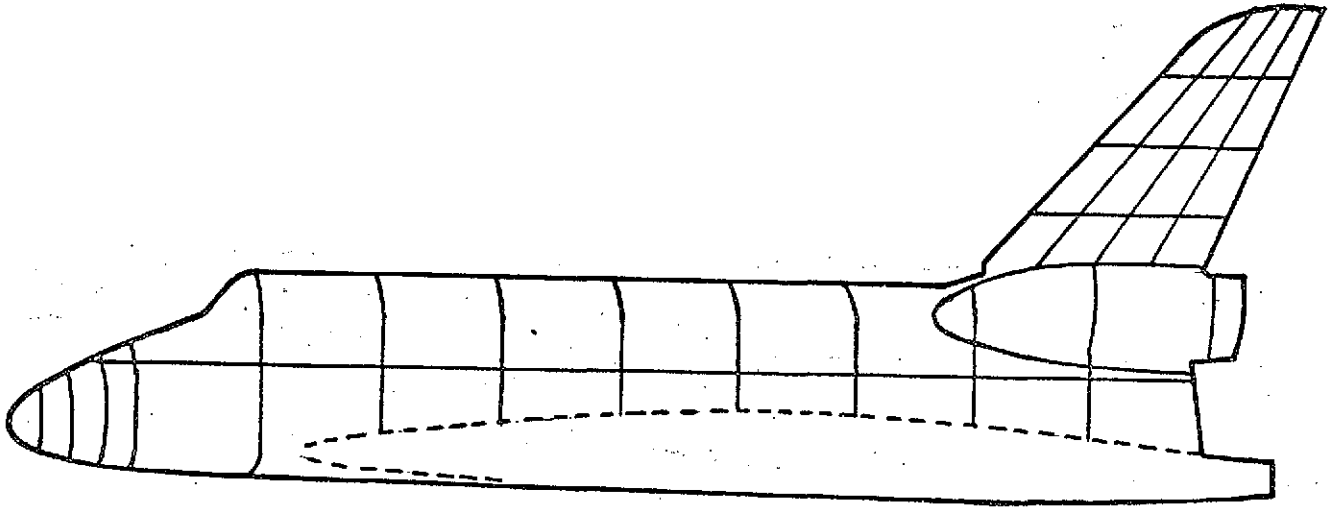

Isotherm	$h/h_{r=1'}$
1	
2	
3	
4	
5	
6	
7	
8	
9	
10	

CONFIG. 1

LENGTH (ft) =

SCALE .00593

FACILITY LRC/VDT

TEST OH42

RUN 4138 to 4171

M_∞ =

P_{total} (psia) =

T_{total} (°R) =

T_{aw}/T_{total} =

R_N per foot =

$T_{phase\ change}$ (°F) =

α = 30°

β =

ϕ =

Camera Coordinates (from model center, x-axis parallel w/ stream, + downstream)

x (in) =

y (in) =

z (in) =

FIG. 9

PHASE CHANGE TEST

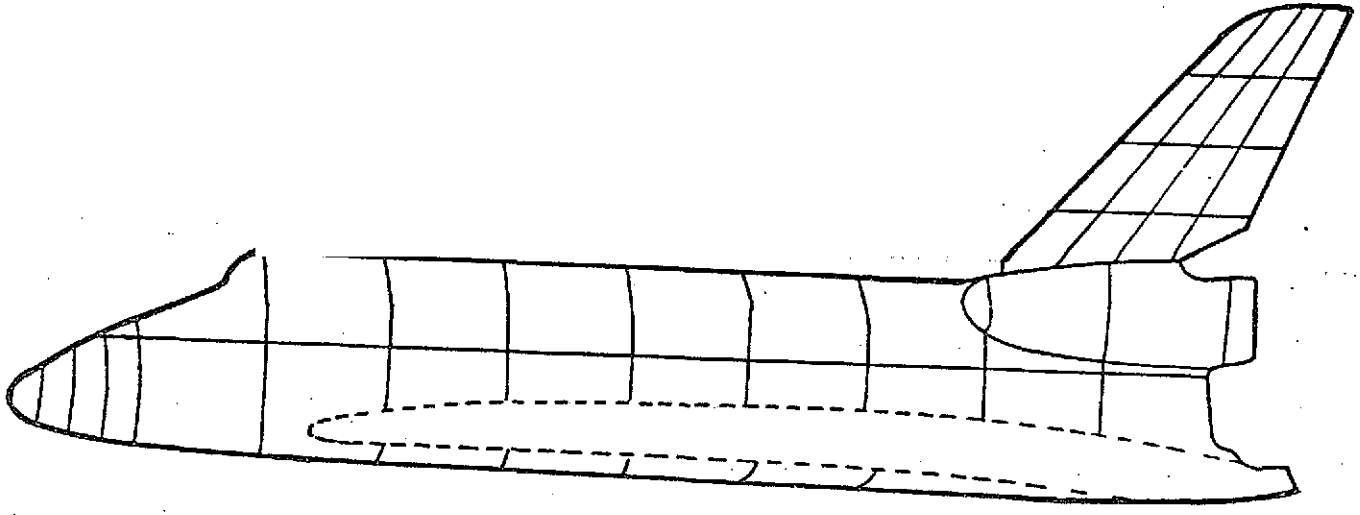

Isotherm	$h/h_{r=1'}$
1	
2	
3	
4	
5	
6	
7	
8	
9	
10	

FIG. 10

CONFIG.

LENGTH (ft) =

SCALE .00593

FACILITY LRC/VDT

TEST 01142

RUN 4172 to 4176

M_∞ =

P_{total} (psia) =

T_{total} (°R) =

T_{aw}/T_{total} =

R_N per foot =

$T_{phase\ change}$ (°F) =

α = 35°

β =

ϕ =

Camera Coordinates (from model center, x-axis parallel w/ stream, + downstream)

x (in) =

y (in) =

z (in) =

PHASE CHANGE TEST

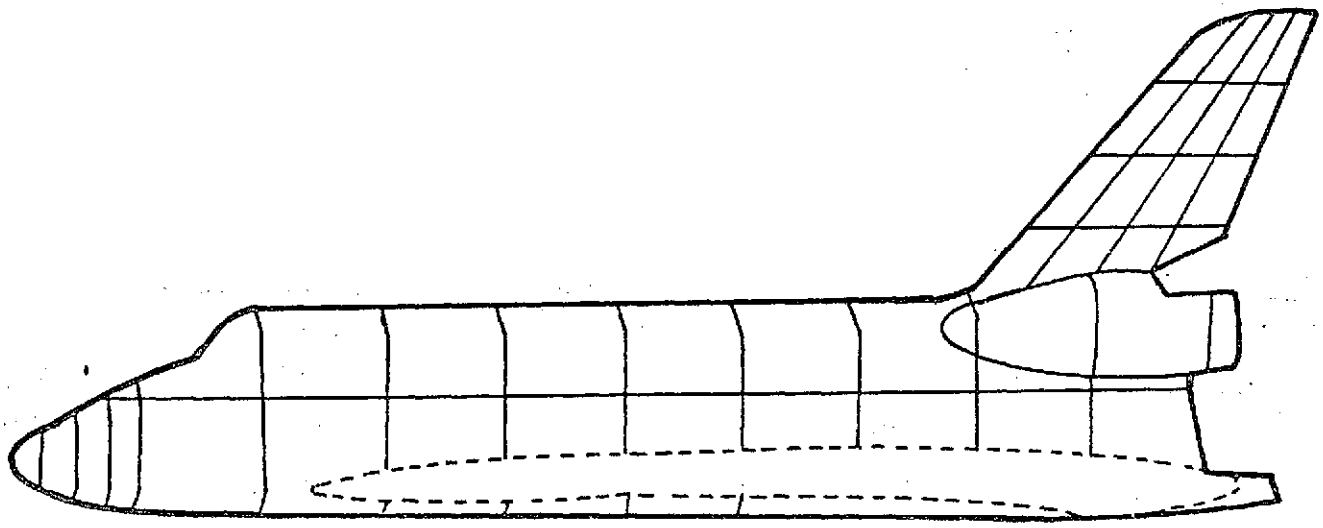

Isotherm	$h/h_{r=1'}$
1	
2	
3	
4	
5	
6	
7	
8	
9	
10	

CONFIG. 46-1

LENGTH (ft) =

SCALE .00593

FACILITY LRC/VDT

TEST OH42

RUN 4177 to 4193

M_∞ =

P_{total} (psia) =

T_{total} (°R) =

T_{aw}/T_{total} =

R_N per foot =

$T_{phase\ change}$ (°F) =

α = 30°

β =

ϕ =

Camera Coordinates (from model center, x-axis parallel w/ stream, + downstream)

x (in) =

y (in) =

z (in) =

FIG. 11

PHASE CHANGE TEST

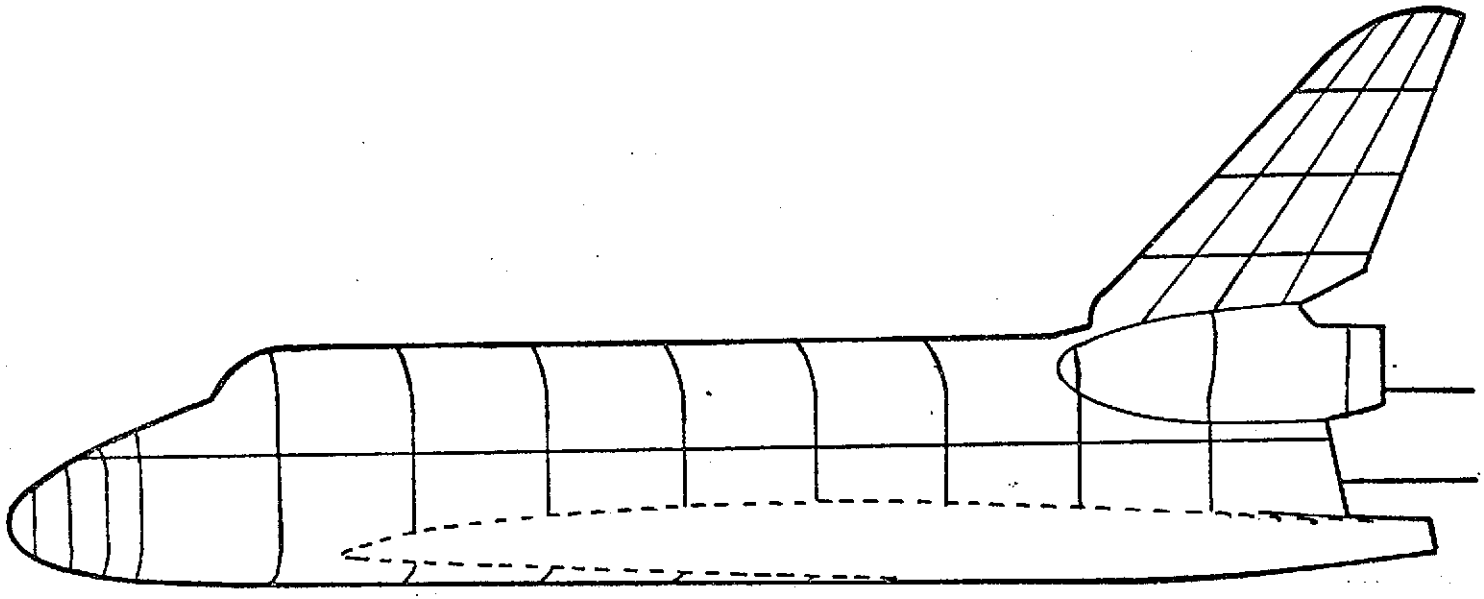

Isotherm	$h/h_{r=1'}$
1	
2	
3	
4	
5	
6	
7	
8	
9	
10	

FIG. 12

CONFIG.

LENGTH (ft) =

SCALE .00593

FACILITY LRC/VDT

TEST OH42

RUN 4271 to 4285

M_∞ =

P_{total} (psia) =

T_{total} (°R) =

T_{aw}/T_{total} =

R_N per foot =

$T_{phase\ change}$ (°F) =

α = 30°

β =

ϕ =

Camera Coordinates (from model center, x-axis parallel w/ stream, + downstream)

x (in) =

y (in) =

z (in) =

PHASE CHANGE TEST

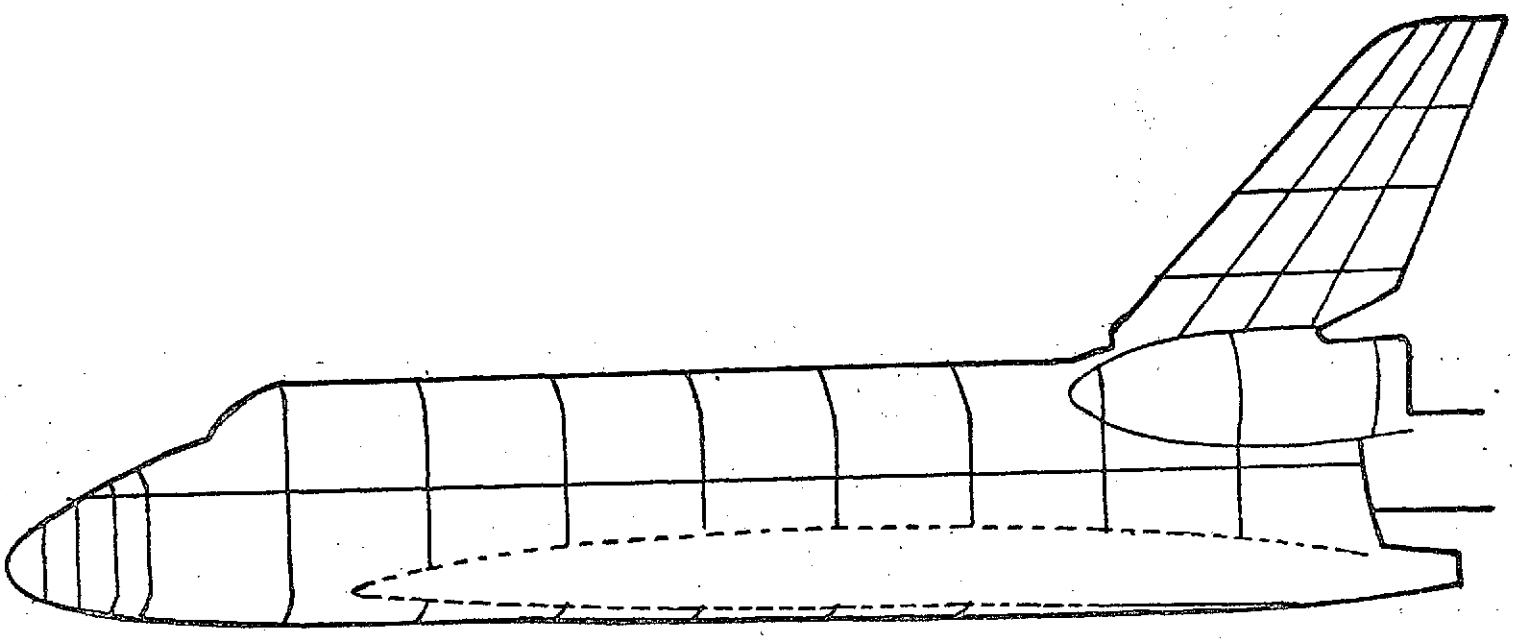

Isotherm	$h/h_{r=1}$
1	
2	
3	
4	
5	
6	
7	
8	
9	
10	

FIG. 13

CONFIG.

LENGTH (ft) =

SCALE .00593

FACILITY LRC/VDT

TEST OH42

RUN 4286 to 4292

M_∞ =

P_{total} (psia) =

T_{total} (°R) =

T_{aw}/T_{total} =

R_N per foot =

$T_{phase\ change}$ (°F) =

α = 35°

β =

ϕ =

Camera Coordinates (from model center, x-axis parallel w/ stream, + downstream)

x (in) =

y (in) =

z (in) =

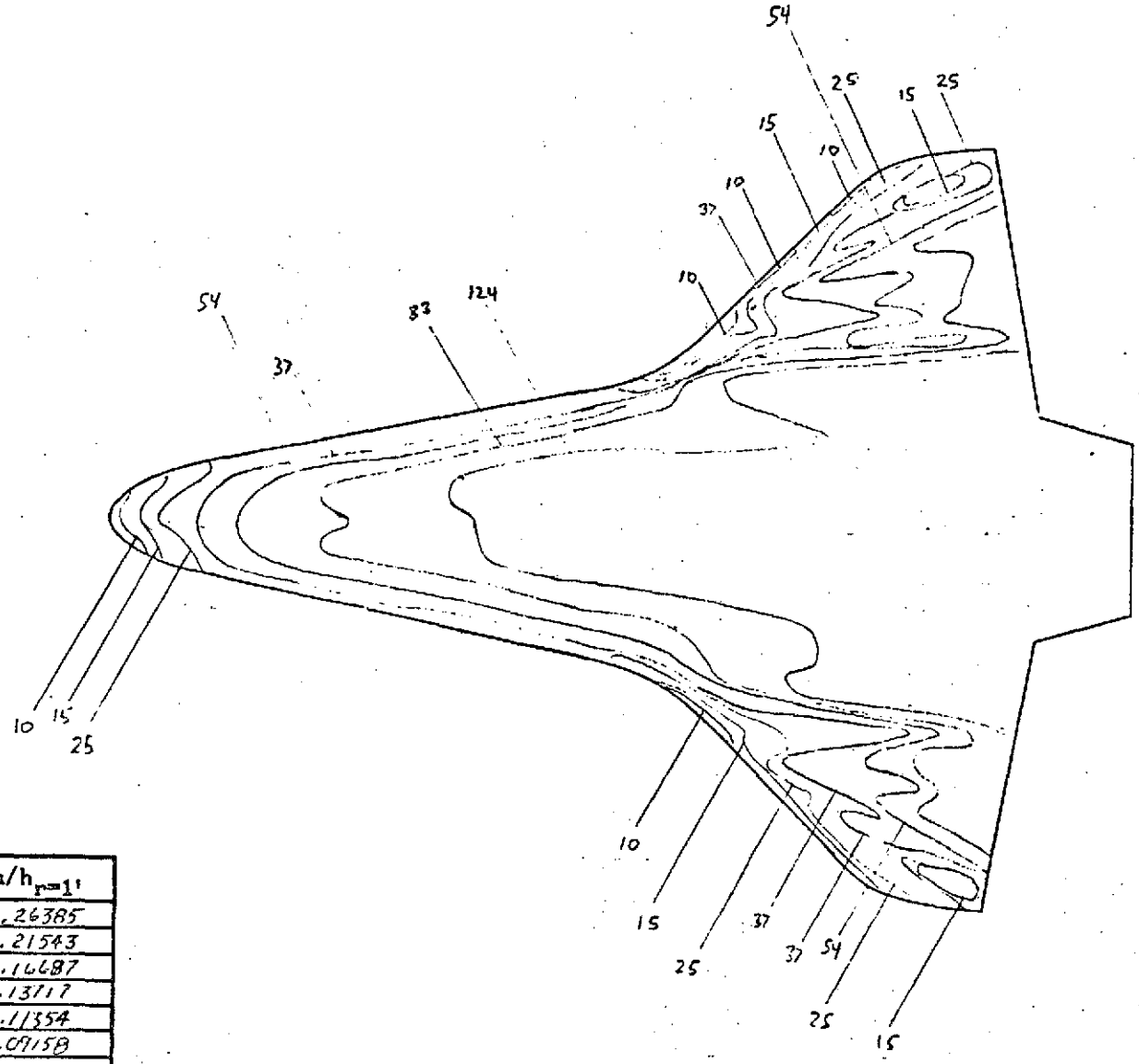

Isotherm	$h/h_{r=1}$
10	.26385
15	.21543
25	.16687
37	.13717
54	.11354
83	.09158
124	.07493

FIG. 14

CONFIG. 46-4

LENGTH (ft) = .638

SCALE .00593

FACILITY LRC/VDT

TEST ØH42A (RPM)

RUN 4084

M_∞ = 8

P_{total} (psig) = 620

T_{total} (°F) = 900

T_{aw}/T_{total} = 0.91

R_N per foot = 3.0×10^6

$T_{phase\ change}$ (°F) = 300

α = 30

β = 0

ϕ = 0

Camera Coordinates (from model center, x-axis parallel w/ stream, + downstream)

x (in) =

y (in) =

z (in) =

HS = .07207

$\sqrt{\rho C_p k}$ = .0496

PHASE CHANGE TEST

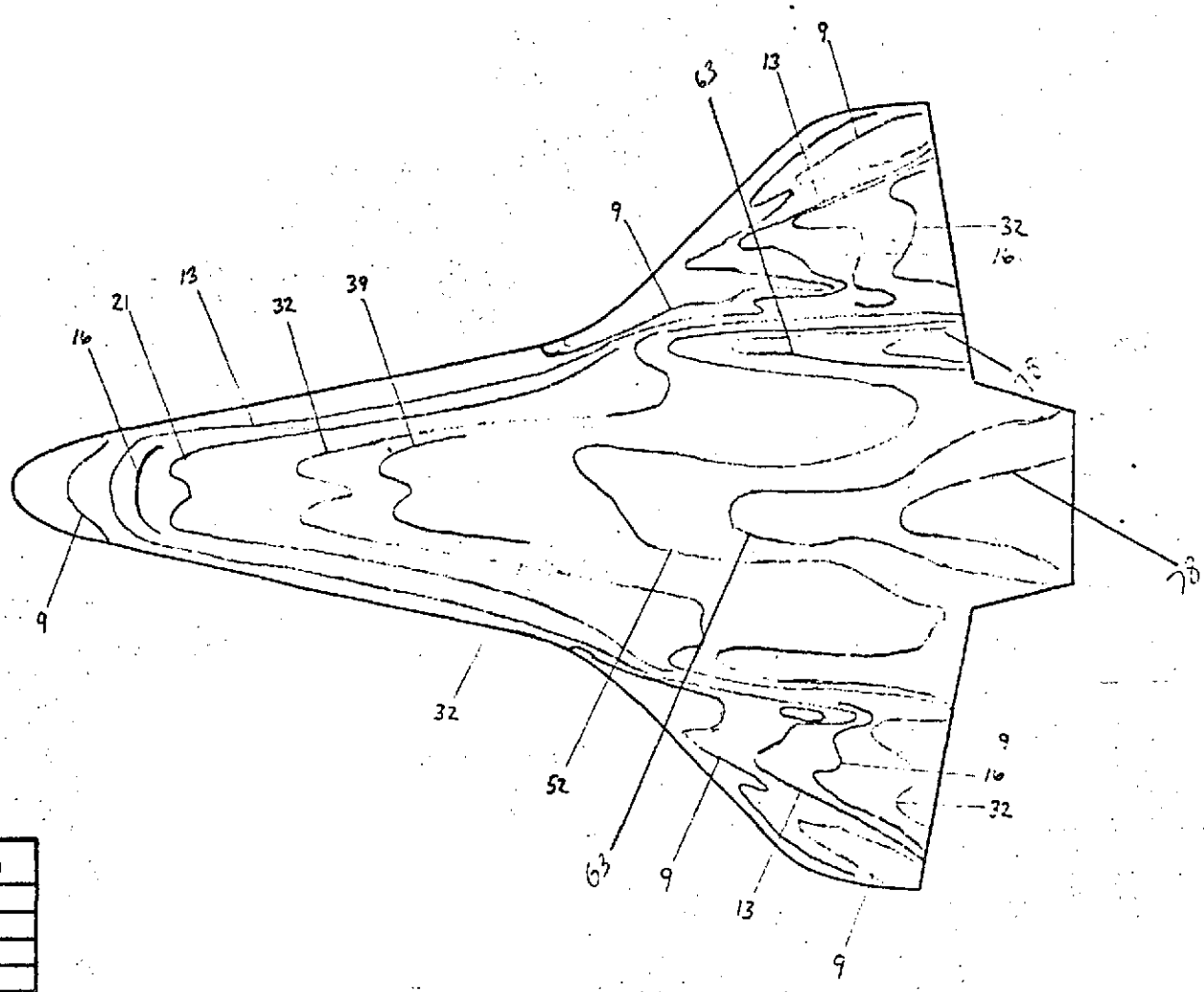

Isotherm	$h/h_{r=1'}$
9	.130203
13	.108336
16	.0976526
21	.085238
32	.069051
39	.06255
52	.05417
63	.04921
78	.04432

FIG. 15

CONFIG. 46-4

LENGTH (ft) = .638

SCALE .00593

FACILITY LRC/VDT

TEST OH42A (RPA)

RUN 4085

M_∞ = 8

P_{total} (psi) = 630

T_{total} (°F) = 880

T_{aw}/T_{total} = .91

R_N per foot = 3.0

$T_{phase\ change}$ (°F) = 200

α = 30

β =

ϕ =

Camera Coordinates (from model center, x-axis parallel w/ stream, + downstream)

x (in) =

y (in) =

z (in) =

HS = .072288

$1/\sqrt{qt}$ = .0478

PHASE CHANGE TEST

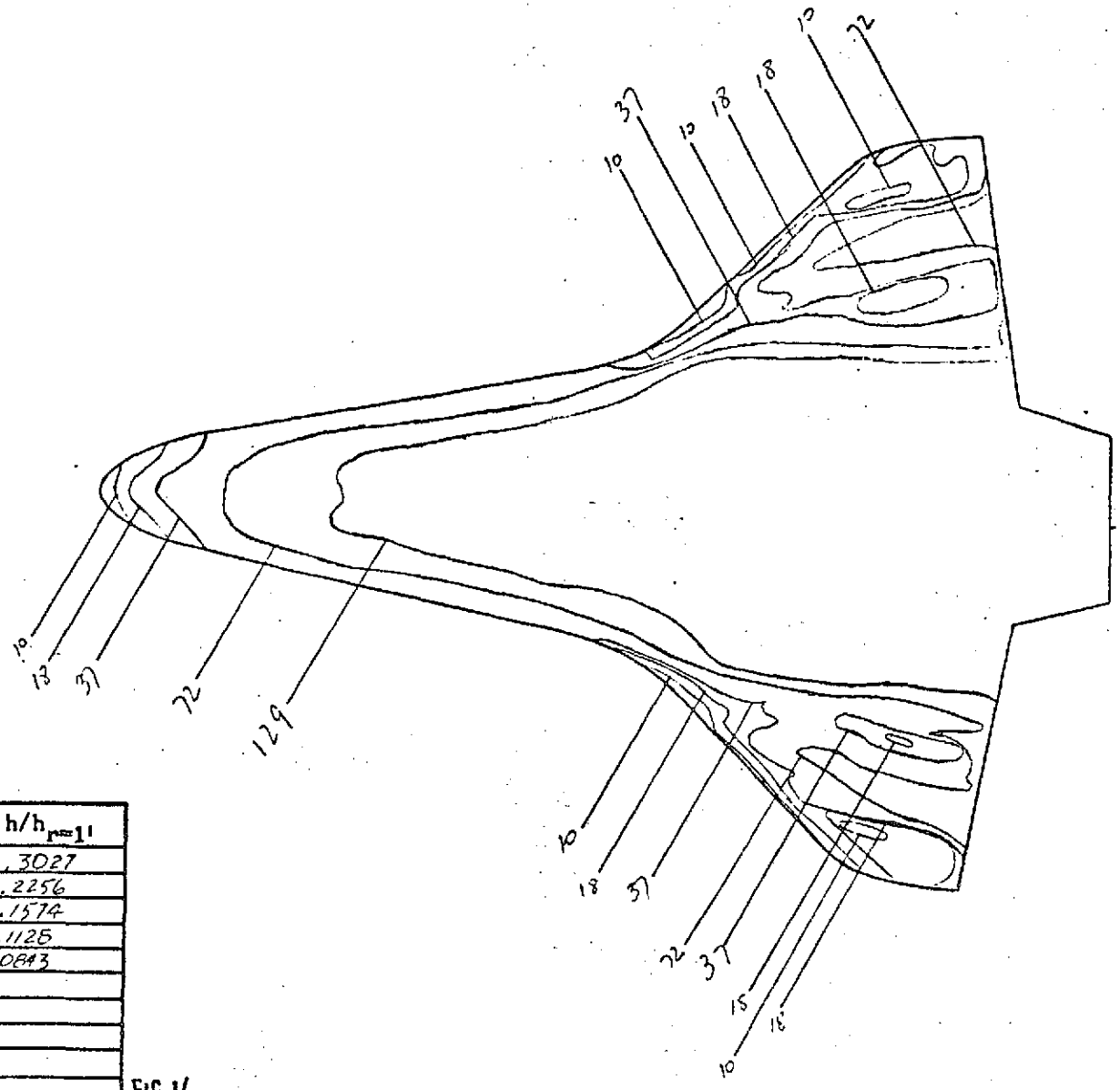

Isotherm	$h/h_{r=1'}$
10	.3027
18	.2256
37	.1574
72	.1125
129	.0843

FIG 16

CONFIG. 46-4

LENGTH (ft) = .638

SCALE .00593

FACILITY LRC/VDT

TEST OH42A (RPA)

RUN 4086

M_∞ = 8

P_{total} (psig) = 1400

T_{total} (°F) = 925

T_{aw}/T_{total} = .91

R_N per foot = 6×10^6

$T_{phase\ change}$ (°F) = 400

α = 30°

β = 0

ϕ = 0

Camera Coordinates (from model center, x-axis parallel w/ stream, + downstream)

x (in) =

y (in) =

z (in) =

$HS = .104839\ BTU/FT^2\text{-}SEC\text{-}°F$

$\sqrt{\rho c_p k} = .0503$

PHASE CHANGE TEST

FRAME 8. FIRST FRAME IN TUNNEL — CENTER TRIPPED THROUGH B.L.

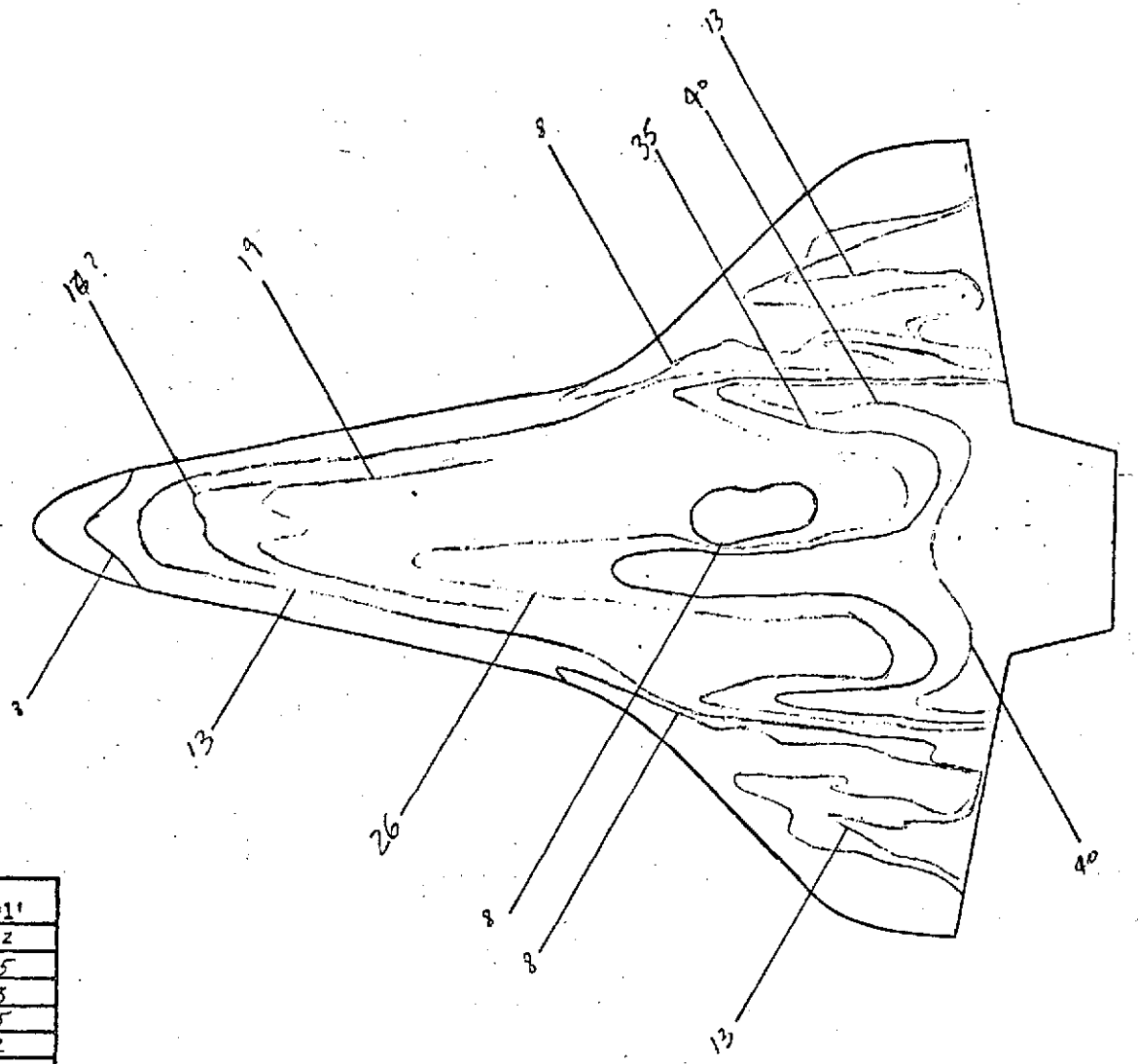

Isotherm	$h/h_{r=1'}$
8	.13722
13	.10765
16	.09703
19	.08905
26	.07612
35	.06561
40	.06137

FIG. 17

CONFIG. 46-4

LENGTH (ft) = .638

SCALE .00593

FACILITY LRC/VDT

TEST OH42A (RPA)

RUN 4087

M_∞ = 8

P_{total} (psig) = 1400

T_{total} (°F) = 925

T_{aw}/T_{total} = .91

R_N per foot = 6×10^6

$T_{phase\ change}$ (°F) = 250

α = 30°

β = 0

ϕ = 0

Camera Coordinates (from model center, x-axis parallel w/ stream, + downstream)

x (in) =

y (in) =

z (in) =

HS = .10475 $BTU/FT^2\text{-}SEC\text{-}^\circ F$

$\sqrt{\rho C_p k}$ = .0489

PHASE CHANGE TEST

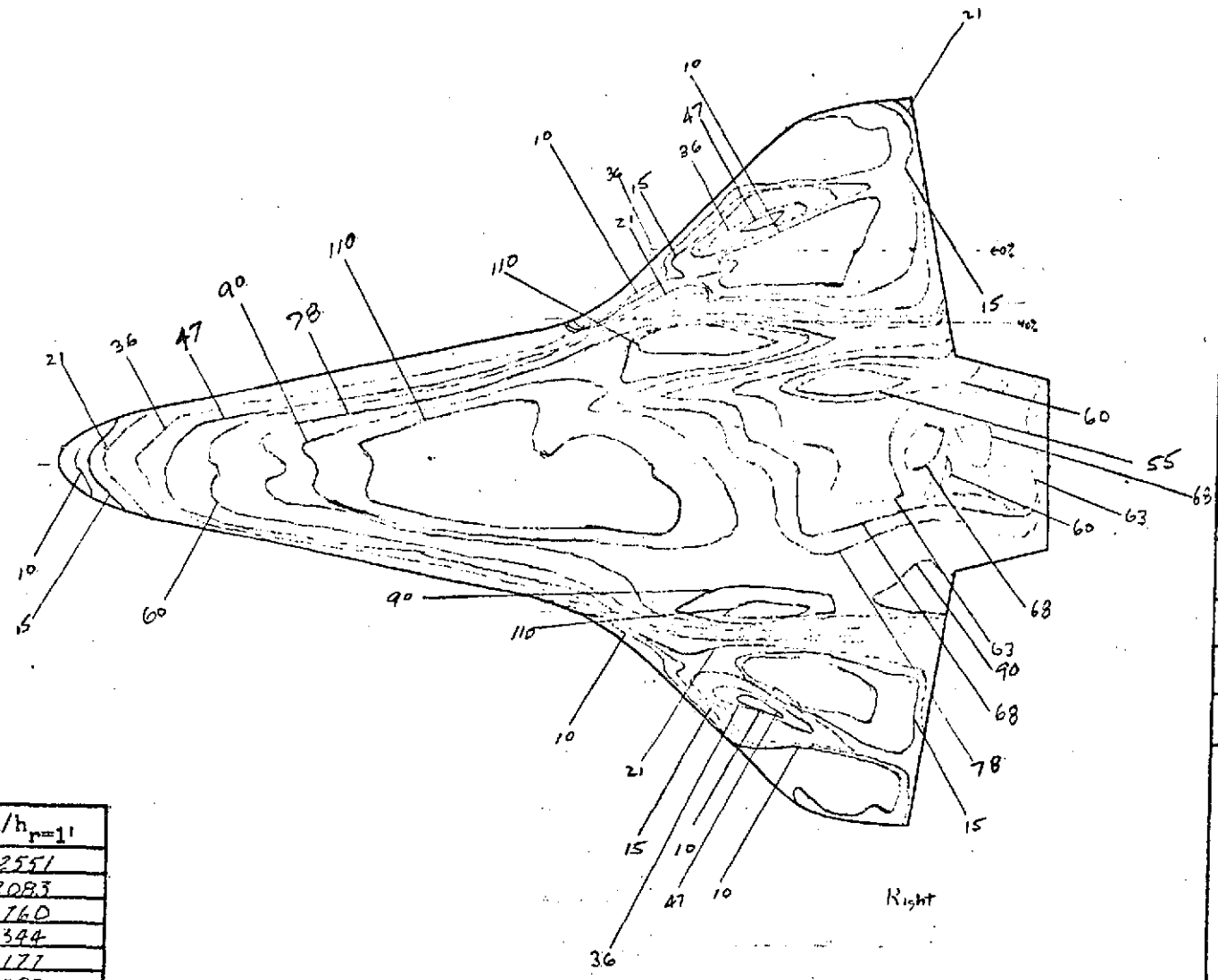

Isotherm	$h/h_{r=1'}$
10	.2551
15	.2083
21	.1760
36	.1344
47	.1171
55	.1098
60	.1041
63	.1016
68	.0978
78	.0913
90	.0850
110	.0769

FIG. 18

NASA Langley (Feb. 1971)

CONFIG. 46-4

LENGTH (ft) = .638

SCALE .00593

FACILITY LRC/VDT

TEST OH42A (RPA)

RUN 4088

M_∞ = 8

P_{total} (psig) = 1935

T_{total} (°F) = 935

T_{aw}/T_{total} = .91

R_N per foot = 8×10^6

$T_{phase\ change}$ (°F) = 400

α = 30

β = 0

ϕ = 0

Camera Coordinates (from model center, x-axis parallel w/ stream, + downstream)

x (in) =

y (in) =

z (in) =

HS = .1219 BTU/FT²-SEC-°F

$\sqrt{\rho C_p k}$ = .0503

HVD-EVCS

PHASE CHANGE TEST

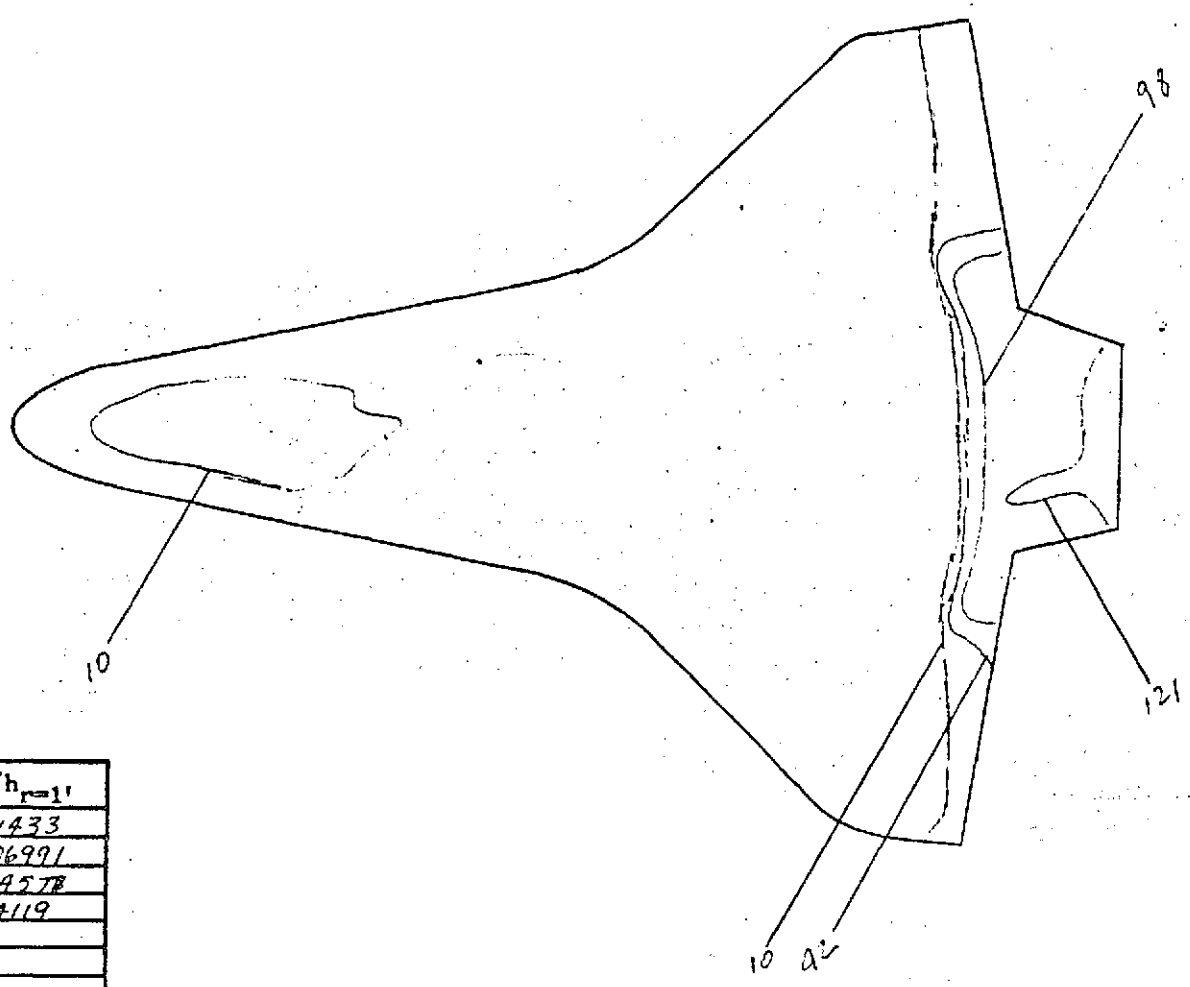

Isotherm	$h/h_{r=1'}$
10	.1433
42	.06991
98	.04578
121	.04119

FIG. 19

CONFIG. 46-4

LENGTH (ft) = .638

SCALE .00593

FACILITY LRC/VDT

TEST OH42A (RPA)

RUN 4089

M_∞ = 8

P_{total} (psig) = 163

T_{total} (°F) = 750

T_{aw}/T_{total} = .91

R_N per foot = 1×10^6

$T_{phase\ change}$ (°F) = 150

α = 30

β = 0

ϕ = 0

Camera Coordinates (from model center, x-axis parallel w/ stream, + downstream)

x (in) =

y (in) =

z (in) =

$HS = .03938\ BTU/FT^2\text{-}SEC\text{-}°F$

PHASE CHANGE TEST

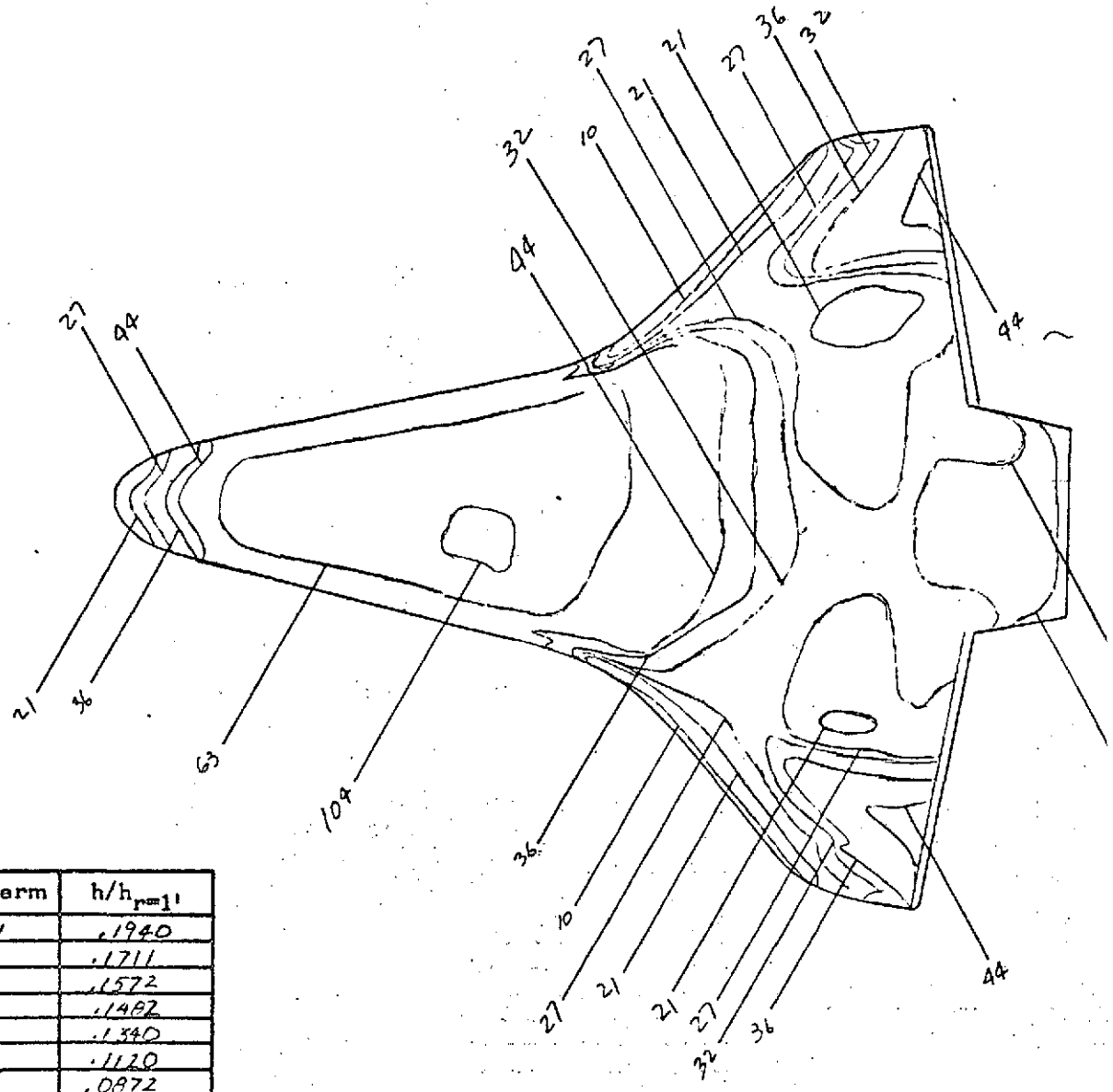

Isotherm	$h/h_{r=1}$
21	.1940
27	.1711
32	.1572
36	.1492
44	.1340
63	.1120
104	.0872

FIG. 20

CONFIG. 46-4

LENGTH (ft) = .638

SCALE .00593

FACILITY LRC/VDT

TEST 0H42A (RPH)

RUN 4091

M_∞ = 8

P_{total} (psig) = 1390

T_{total} (°F) = 930

T_{aw}/T_{total} = .932

R_N per foot = 6×10^6

$T_{phase\ change}$ (°F) = 400

α = 40°

β = 0

ϕ = 0

Camera Coordinates (from model center, x-axis parallel w/ stream, + downstream)

x (in) =

y (in) =

z (in) =

HS = .10453 $BTU/FT^2\text{-}SEC\text{-}°F$

PHASE CHANGE TEST

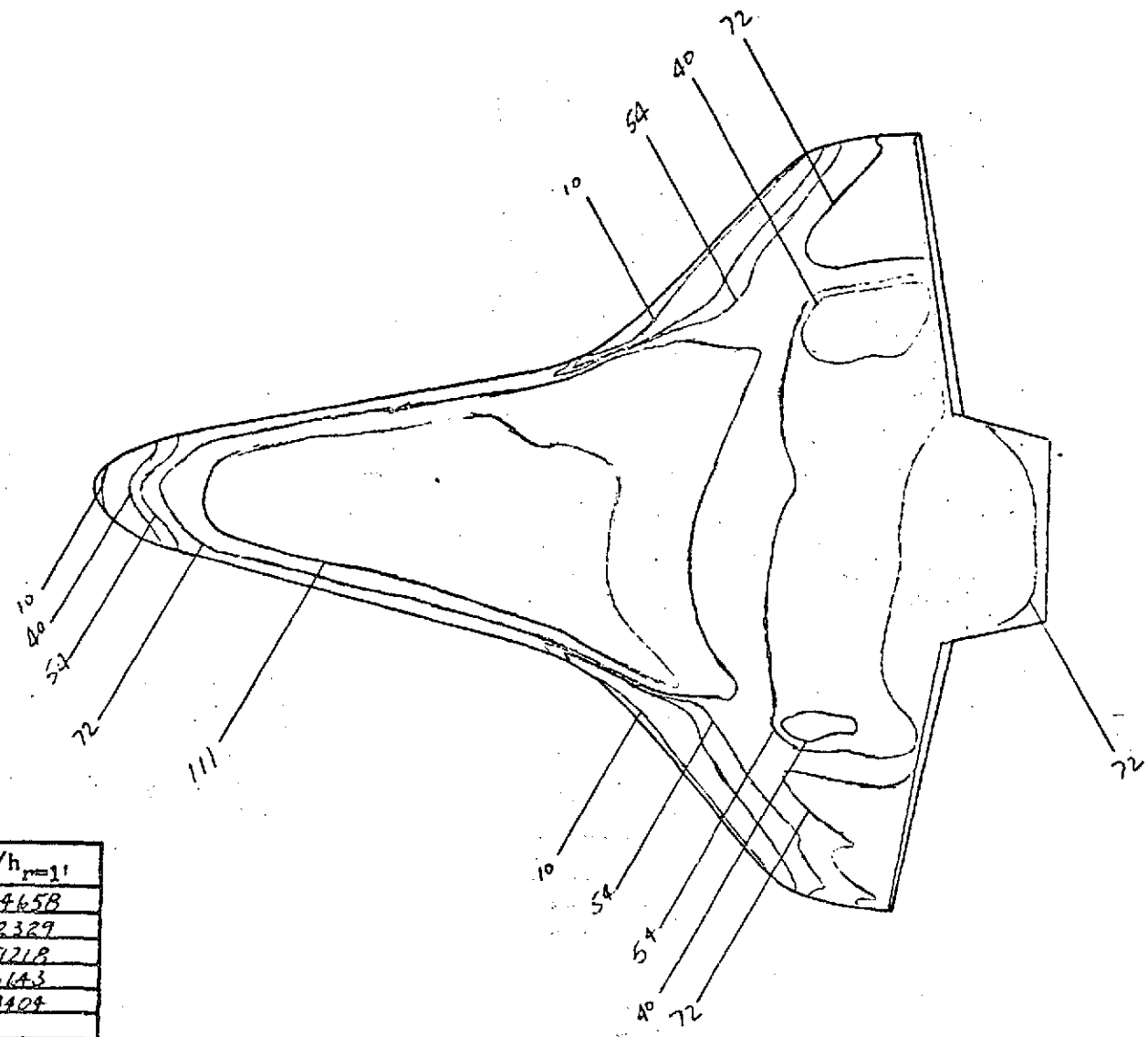

Isotherm	$h/h_{r=1}$
10	.44658
40	.22329
54	.19218
72	.16643
111	.13404

FIG. 21

CONFIG.

LENGTH (ft) = .638

SCALE .00593

FACILITY LRC/VDT

TEST OH42A (RPA)

RUN 4092

M_∞ = 8

P_{total} (psi) = 1400

T_{total} (°F) = 940

T_{aw}/T_{total} = .932

R_N per foot = 1×10^6

$T_{phase\ change}$ (°F) = 200

α = 40°

β = 0

ϕ = 0

Camera Coordinates (from model center, x-axis parallel w/ stream, + downstream)

x (in) =

y (in) =

z (in) =

HS = .10477 $BTU/FT^2\text{-}SEC\text{-}^\circ F$

NASA Langley (Feb 1971)

PHASE CHANGE TEST

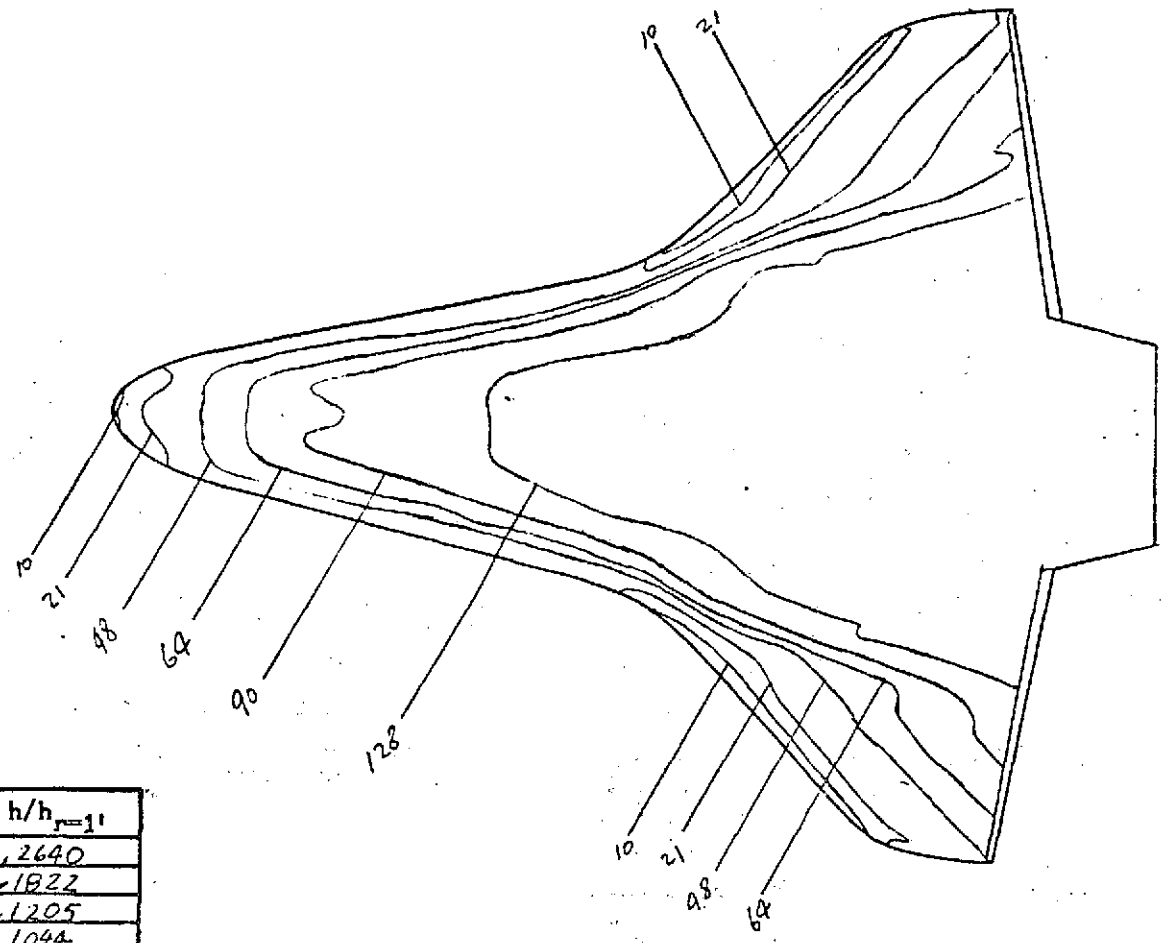

Isotherm	$h/h_{r=1'}$
10	.2640
21	.1822
48	.1205
64	.1044
90	.0880
128	.0738

FIG 22

CONFIG. 46-4

LENGTH (ft) = .638

SCALE .00593

FACILITY LRC/VDT

TEST OH42A (RPM)

RUN 4093

M_∞ = 8

P_{total} (psig) = 150

T_{total} (°F) = 760

T_{aw}/T_{total} = .932

R_N per foot = 1×10^6

$T_{phase\ change}$ (°F) = 200

α = 40°

β = 0

ϕ = 0

Camera Coordinates (from model center, x-axis parallel w/ stream, + downstream)

x (in) =

y (in) =

z (in) =

H_5 = .038176 BTU/FT^2-SEC-°F

PHASE CHANGE TEST

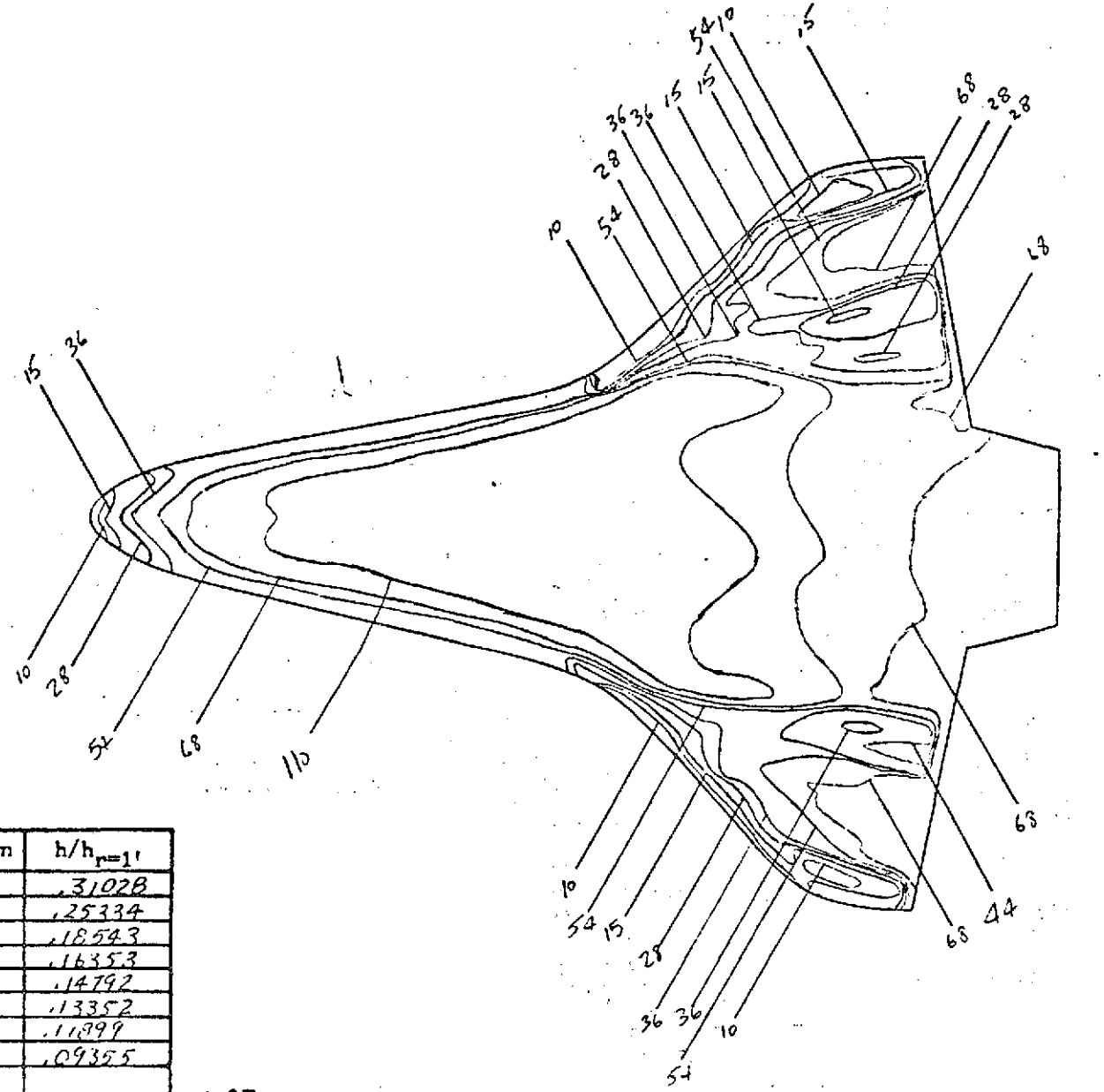

Isotherm	$h/h_{r=1'}$
10	.31028
15	.25334
28	.18543
36	.16353
44	.14792
54	.13352
68	.11899
110	.09355

FIG. 23

CONFIG. 46-4

LENGTH (ft) = .638

SCALE .00593

FACILITY LRC/VDT

TEST OH42A (RPM)

RUN 4096

M_∞ = 8

P_{total} (psig) = 1395

T_{total} (°F) = 900

T_{aw}/T_{total} = .92

R_N per foot = 6×10^6

$T_{phase\ change}$ (°F) = 400

α = 35°

β = 0

ϕ = 0

Camera Coordinates (from model center, x-axis parallel w/ stream, + downstream)

x (in) =

y (in) =

z (in) =

HS = .10447 BTU/FT²-SEC-°F

PHASE CHANGE TEST

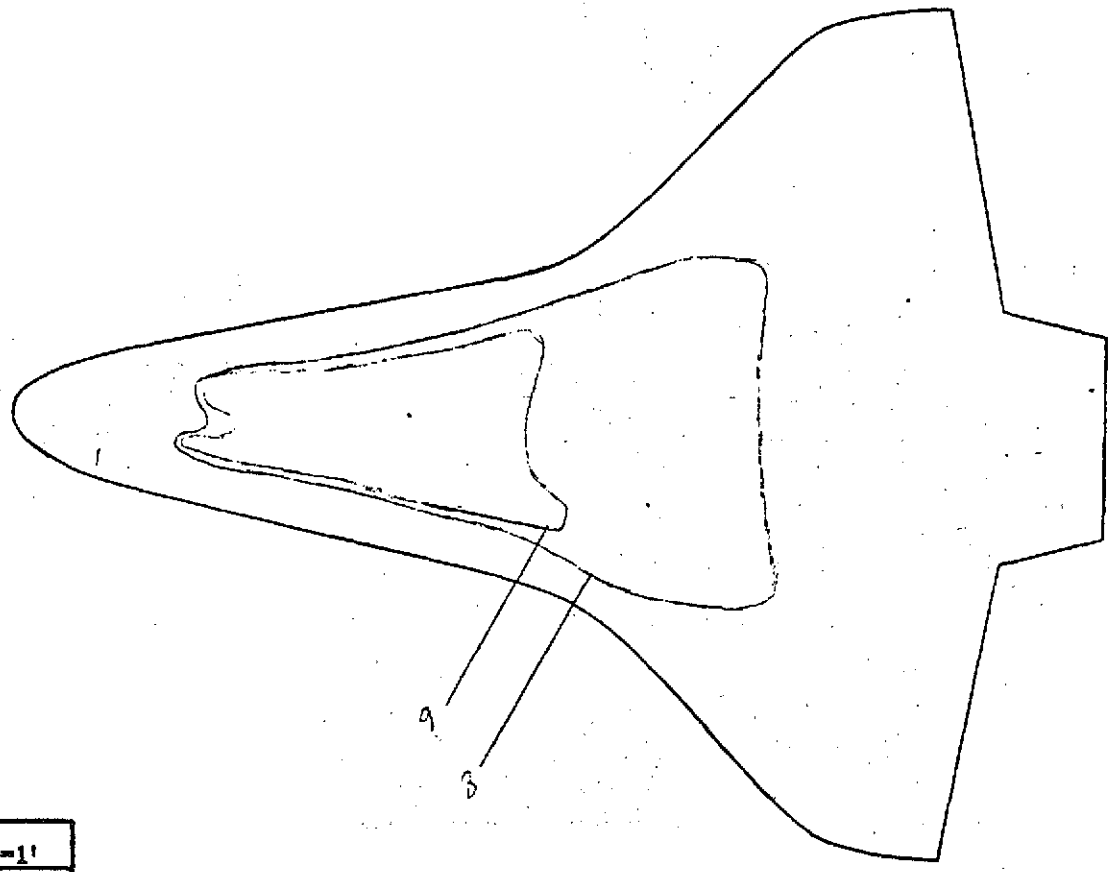

Isotherm	$h/h_{r=1'}$
8	.08629
9	.08135

FIG. 24

ALL MELTED AT FRAME 10

CONFIG. 46-4

LENGTH (ft) = .638

SCALE .00593

FACILITY LRC/VDT

TEST OH 42A (RP)

RUN 4097

M_∞ = 8

P_{total} (psig) = 1385

T_{total} (°F) = 925

T_{aw}/T_{total} = .92

R_N per foot = 6×10^6

$T_{phase\ change}$ (°F) = 200

α = 35°

β = 0

ϕ = 0

Camera Coordinates (from model center, x-axis parallel w/ stream, + downstream)

x (in) =

y (in) =

z (in) =

HS = .10407 BTU/FT²-SEC-°F

PHASE CHANGE TEST

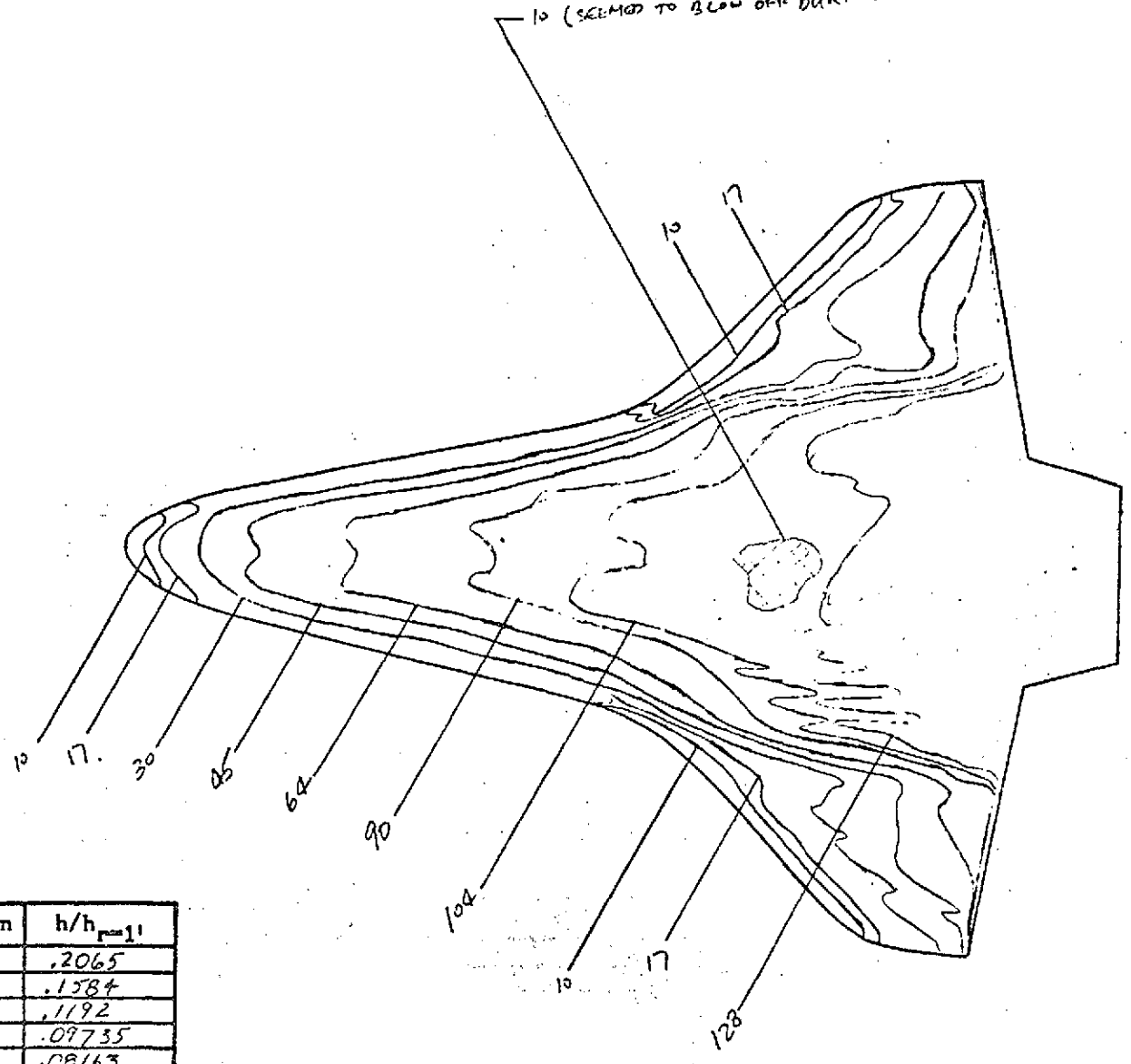

Isotherm	$h/h_{r=1}$
10	.2065
17	.1584
30	.1192
45	.09735
64	.08163
90	.06884
104	.06404
128	.05172

FIG. 25

CONFIG. 46-4

LENGTH (ft) = .638

SCALE .00593

FACILITY LRC/VDT

TEST OH42A (RPA)

RUN 4098

$M_\infty = 8$

P_{total} (psig) = 160

T_{total} (°F) = 760

T_{aw}/T_{total} = .92

R_N per foot = 1×10^6

$T_{phase\ change}$ (°F) = 175

$\alpha = 35°$

$\beta = 0$

$\phi = 0$

Camera Coordinates (from model center, x-axis parallel w/ stream, + downstream)

x (in) =

y (in) =

z (in) =

$HS = .03916\ BTU/FT^2\text{-}SEC\text{-}°F$

PHASE CHANGE TEST

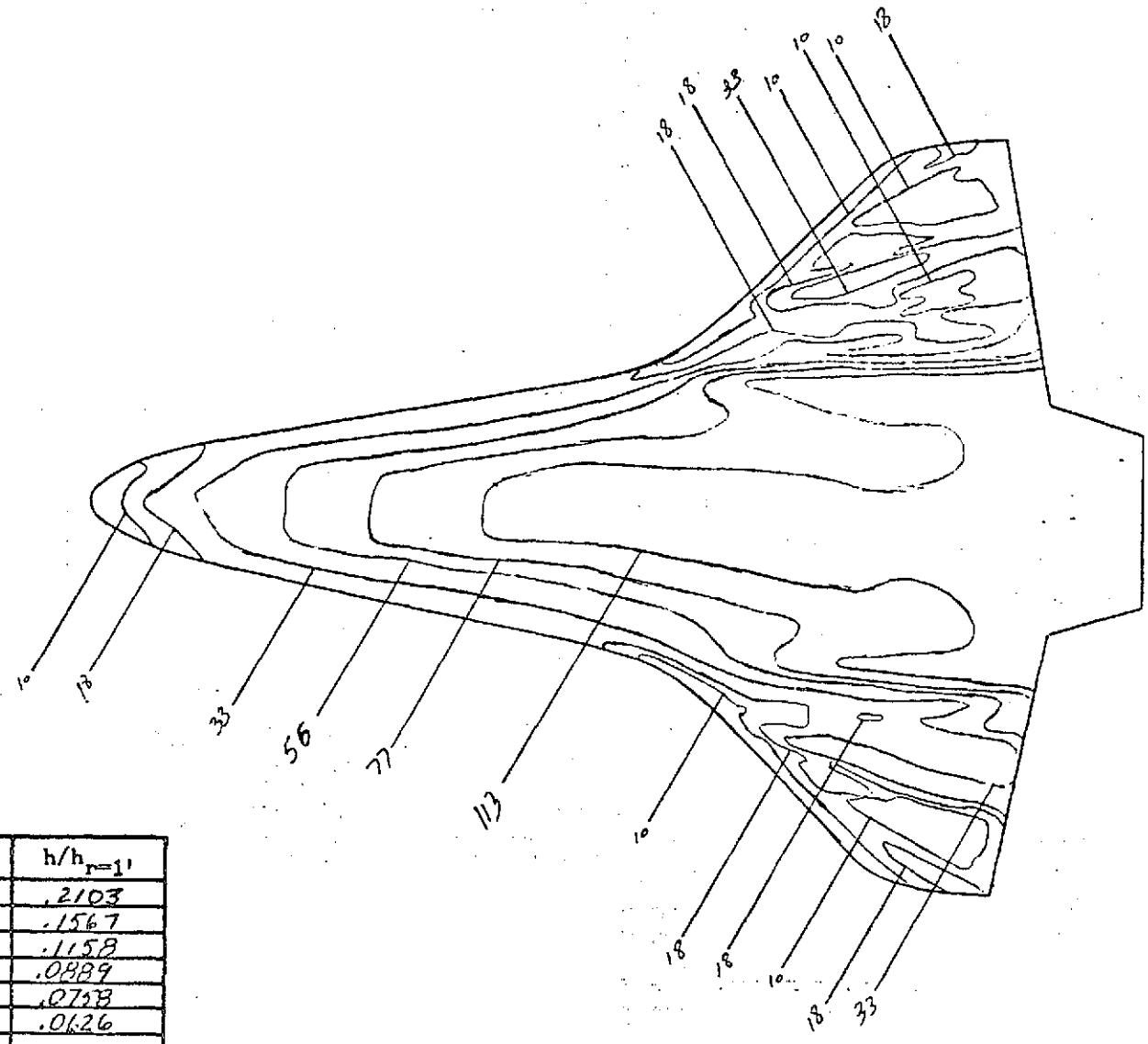

Isotherm	$h/h_{r=1}$
10	.2103
18	.1567
33	.1158
56	.0889
77	.0738
113	.0626

FIG. 26

CONFIG. 46-4

LENGTH (ft) = .638

SCALE .00593

FACILITY LRC/VDT

TEST OH42A (RPA)

RUN 4100

$M_\infty = 8$

P_{total} (psig) = 1420

T_{total} (°F) = 985

T_{aw}/T_{total} = .898

R_N per foot = 6×10^6

$T_{phase\ change}$ (°F) = 350

$\alpha = 25°$

$\beta = 0$

$\phi = 0$

Camera Coordinates (from model center, x-axis parallel w/ stream, + downstream)

x (in) =

y (in) =

z (in) =

HS = .10604 BTU/FT²-SEC-°F

PHASE CHANGE TEST

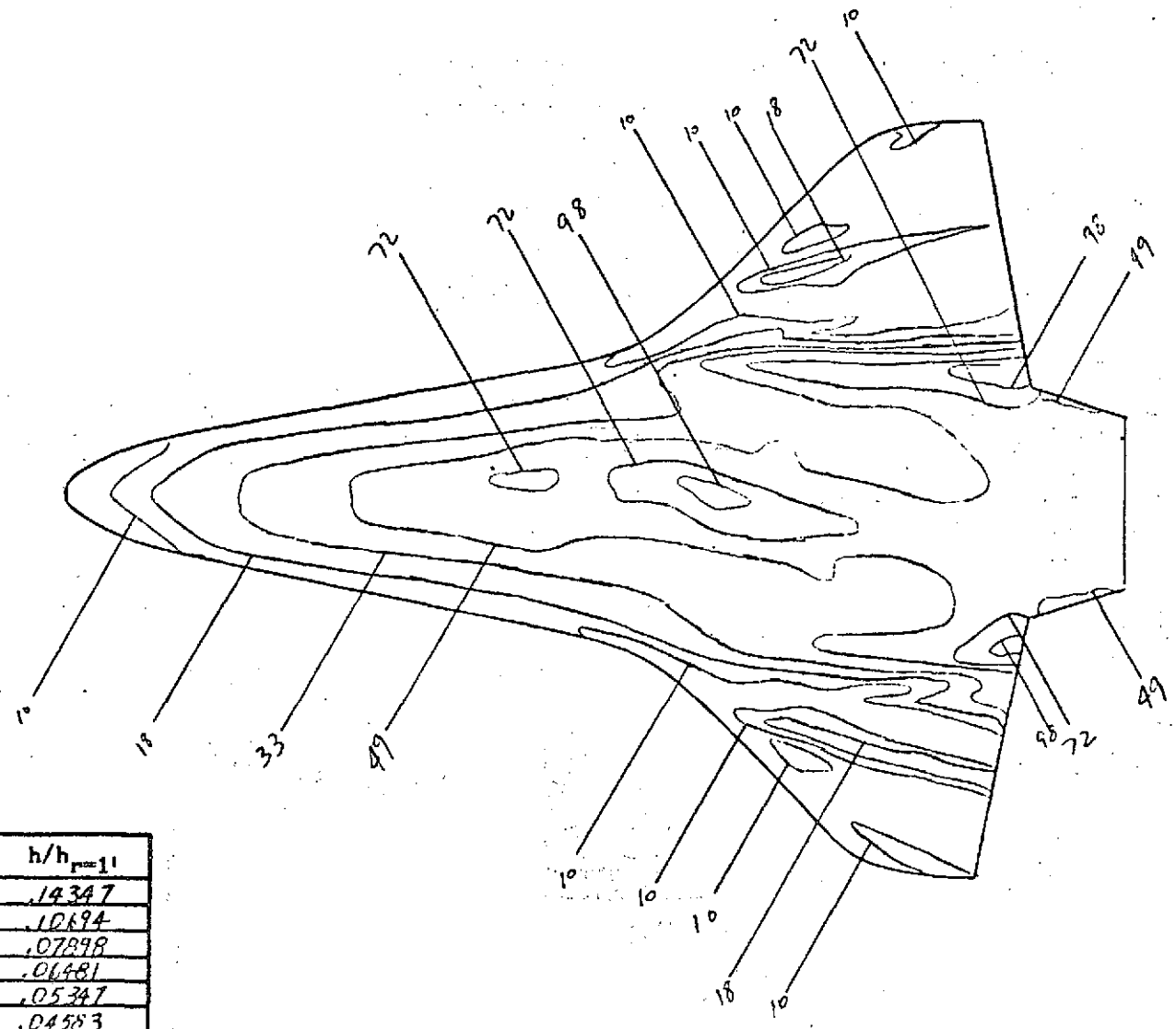

Isotherm	$h/h_{r=1}$
10	.14347
18	.10194
33	.07898
49	.06481
72	.05347
98	.04583

FIG. 27

CONFIG. 46-4

LENGTH (ft) = .638

SCALE .00593

FACILITY LRC/VDT

TEST OH42A (RPA)

RUN 4101

M_∞ = 8

P_{total} (psig) = 1375

T_{total} (°F) = 950

T_{aw}/T_{total} = .898

R_N per foot = 6×10^6

$T_{phase\ change}$ (°F) = 275

α = 25°

β = 0

ϕ = 0

Camera Coordinates (from model center, x-axis parallel w/ stream, + downstream)

x (in) =

y (in) =

z (in) =

HS = .10415 BTU/FT²-SEC-°F

PHASE CHANGE TEST

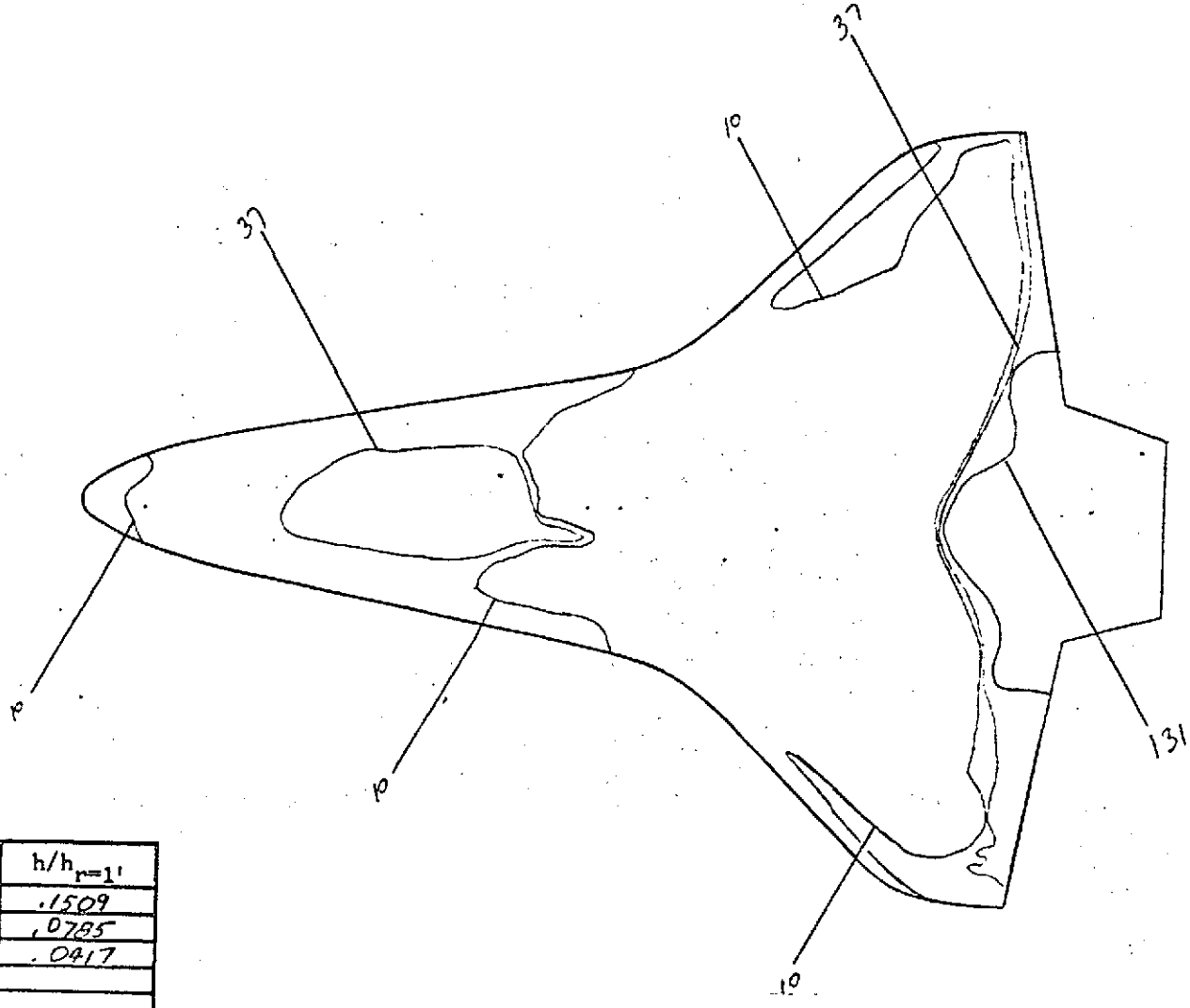

Isotherm	$h/h_{r=1'}$
.10	.1509
37	.0785
131	.0417

FIG. 28

CONFIG. 46-4

LENGTH (ft) = .638

SCALE .00593

FACILITY LRC/VDT

TEST OH42A (RPA)

RUN 4102

M_∞ = 8

P_{total} (psig) = 160

T_{total} (°F) = 735

T_{aw}/T_{total} = .898

R_N per foot = 1×10^6

$T_{phase\ change}$ (°F) = 150

α = 25°

β = 0

ϕ = 0

Camera Coordinates (from model center, x-axis parallel w/ stream, + downstream)

x (in) =

y (in) =

z (in) =

HS = .03902 $BTU/FT^2\text{-}SEC\text{-}°F$

PHASE CHANGE TEST

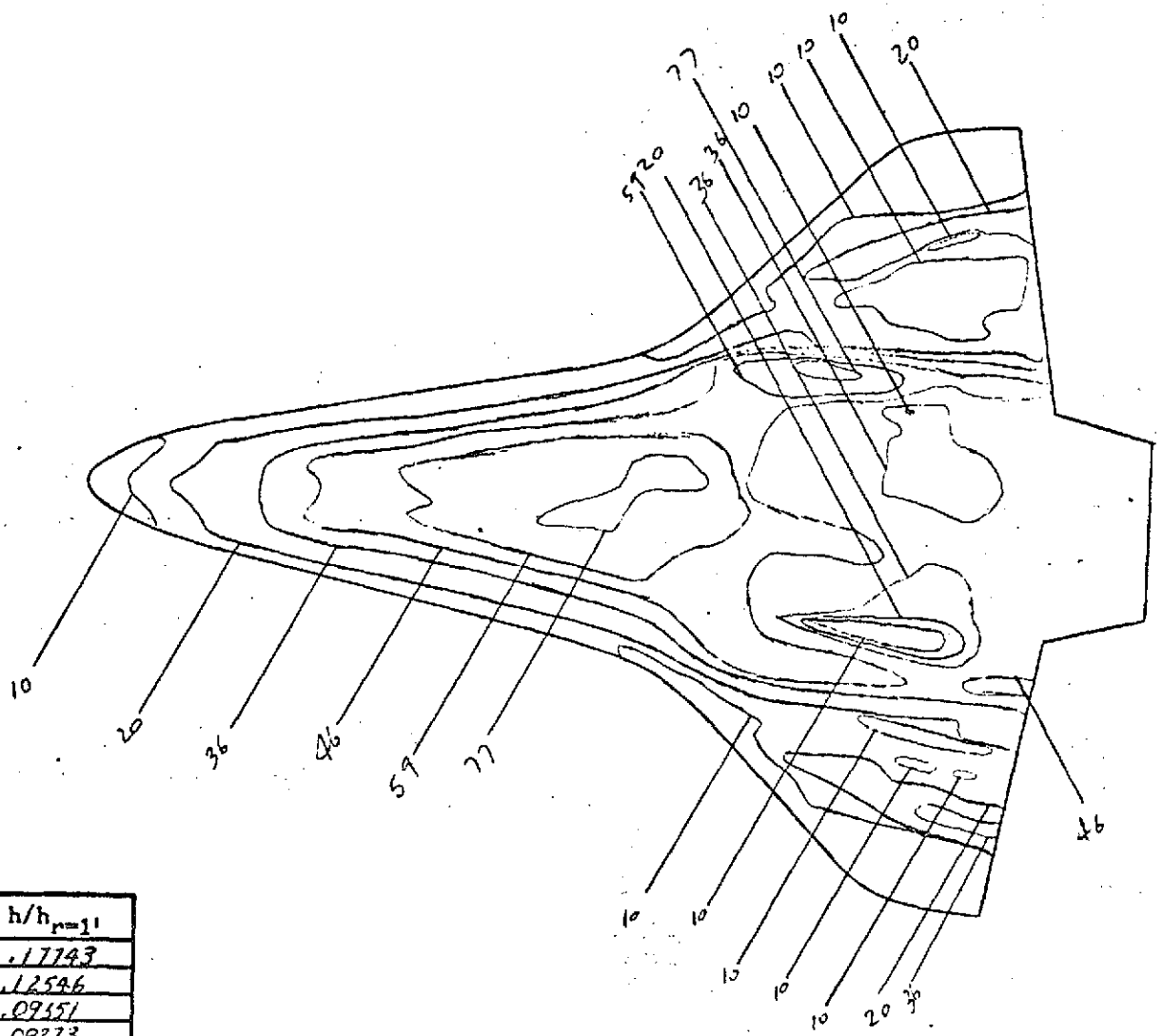

Isotherm	$h/h_{r=1}$
10	.17743
20	.12546
36	.09551
46	.08273
59	.07305
77	.06394

FIG29

CONFIG. 46-4

LENGTH (ft) = .638

SCALE .00593

FACILITY VDT

TEST OH42A (RPA)

RUN 4104

M_∞ = 8

P_{total} (psig) = 1390

T_{total} (°F) = 910

T_{aw}/T_{total} = .91

R_N per foot = 6×10^6

$T_{phase\ change}$ (°F) = 300

α = 30°

β = 0

ϕ = 0

Camera Coordinates (from model center, x-axis parallel w/ stream, + downstream)

x (in) =

y (in) =

z (in) =

HS = .104425 BTU/FT²-SEC-°F

HYD-EVCS

NASA Langley (Feb. 1971)

PHASE CHANGE TEST

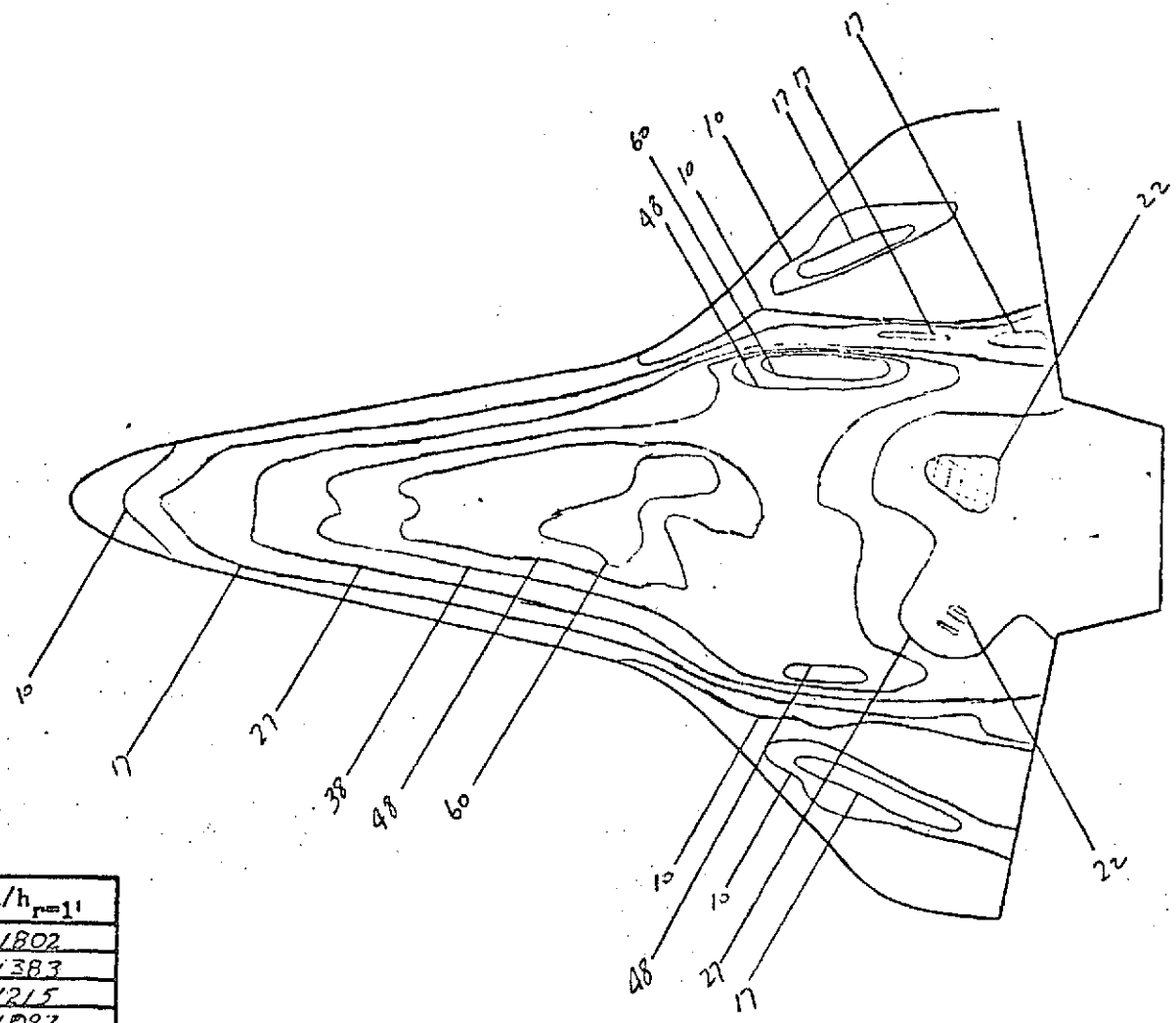

Isotherm	$h/h_{r=1'}$
10	.1802
17	.1383
22	.1215
27	.1097
38	.0935
48	.0823
60	.0736

FIG. 30

CONFIG. 46-4

LENGTH (ft) = .638

SCALE .00593

FACILITY LRC/NDT

TEST OH42A (RPA)

RUN 4105

M_∞ = 8

P_{total} (psig) = 1940

T_{total} (°F) = 970

T_{aw}/T_{total} = .91

R_N per foot = 8×10^6

$T_{phase\ change}$ (°F) = 350

α = 30°

β = 0

ϕ = 0

Camera Coordinates (from model center, x-axis parallel w/ stream, + downstream)

x (in) =

y (in) =

z (in) =

HS = .1224 BTU/FT²-SEC-°F

PHASE CHANGE TEST

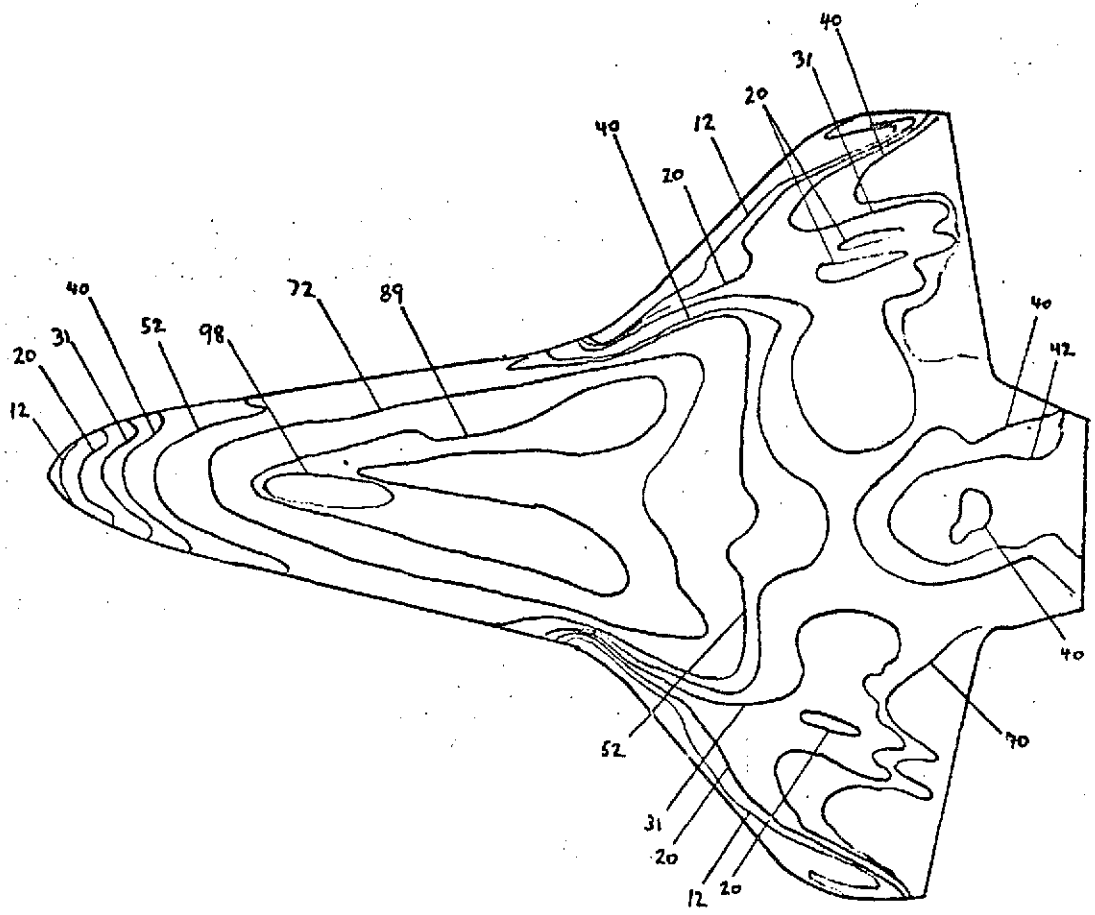

Isotherm	$h/h_{r=1}$
12	.2714
20	.2102
31	.1689
40	.1487
42	.1451
52	.1304
72	.1108
89	.0997
98	.0950

FIG. 31

CONFIG. 46-1

LENGTH (ft) = .638

SCALE .00593

FACILITY LRC/VDT

TEST OH42B RPA

RUN 4130

M_∞ = 8

P_{total} (psi) = 1390

T_{total} (°F) = 980

T_{aw}/T_{total} = .92

R_N per foot = 6×10^6

$T_{phase\ change}$ (°F) = 400

α = 35°

β = 0

ϕ = 0

Camera Coordinates (from model center, x-axis parallel w/ stream, + downstream)

x (in) =

y (in) =

z (in) =

Frame 7 or 8 hit ℄
HS = .10552 BTU/FT²-SEC-°F

GR

HVD-EVCS

NASA Langley (Feb. 1971)

PHASE CHANGE TEST

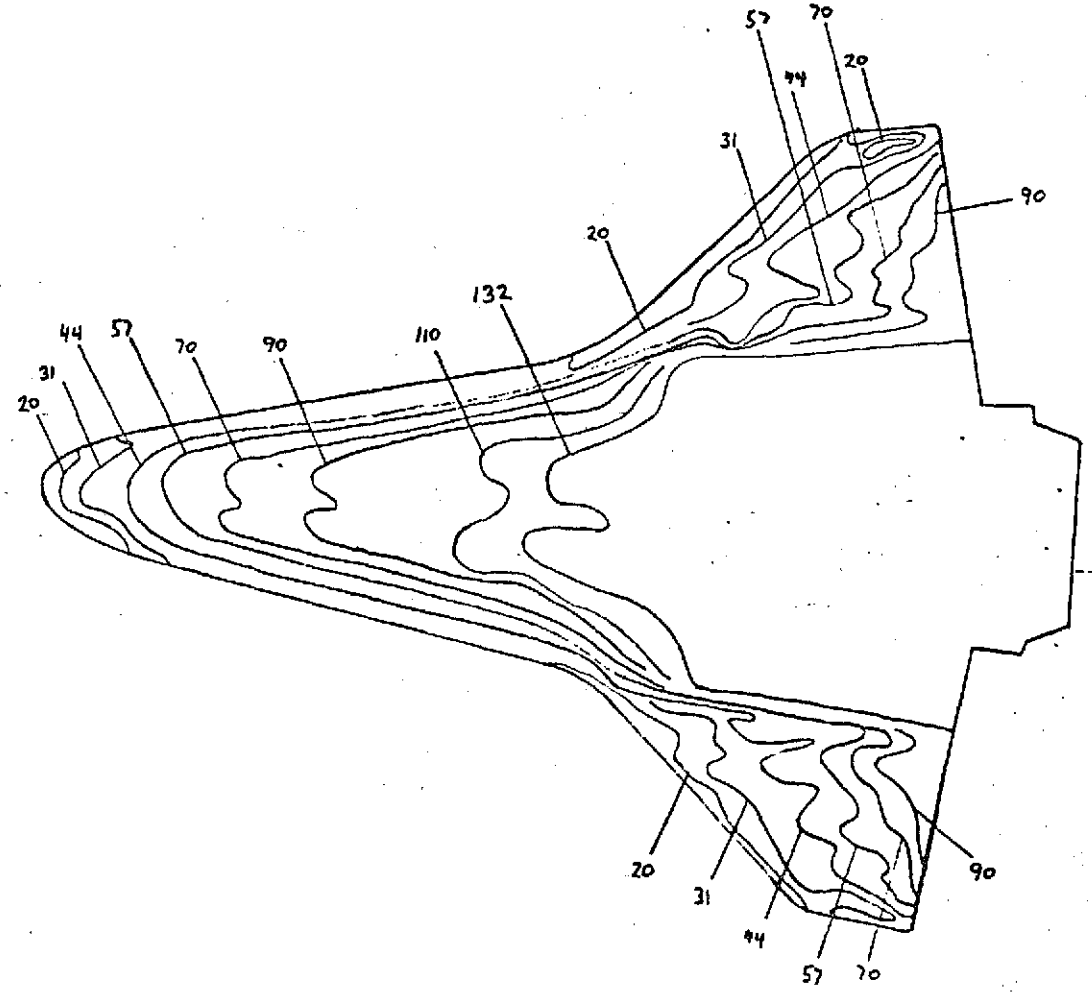

Isotherm	$h/h_{r=1'}$
20	.19623
31	.15762
44	.1323
57	.11624
70	.10489
90	.09250
110	.08367
132	.07639

FIG. 32

CONFIG. 46-4A

LENGTH (ft) = .638

SCALE .00593

FACILITY LRC/VDT

TEST OH42 (RPA)

RUN 4131

M_∞ = 8

P_{total} (psi) = 625

T_{total} (°F) = 910

T_{aw}/T_{total} = .92

R_N per foot = 3×10^6

$T_{phase\ change}$ (°F) = 300

α = 35

β = 0

ϕ = 0

Camera Coordinates (from model center, x-axis parallel w/ stream, + downstream)

x (in) =

y (in) =

z (in) =

H_S = .07282 BTU/FT²-SEC-°F
From 10 hit
℄
C_R
HVD-EVCS

PHASE CHANGE TEST

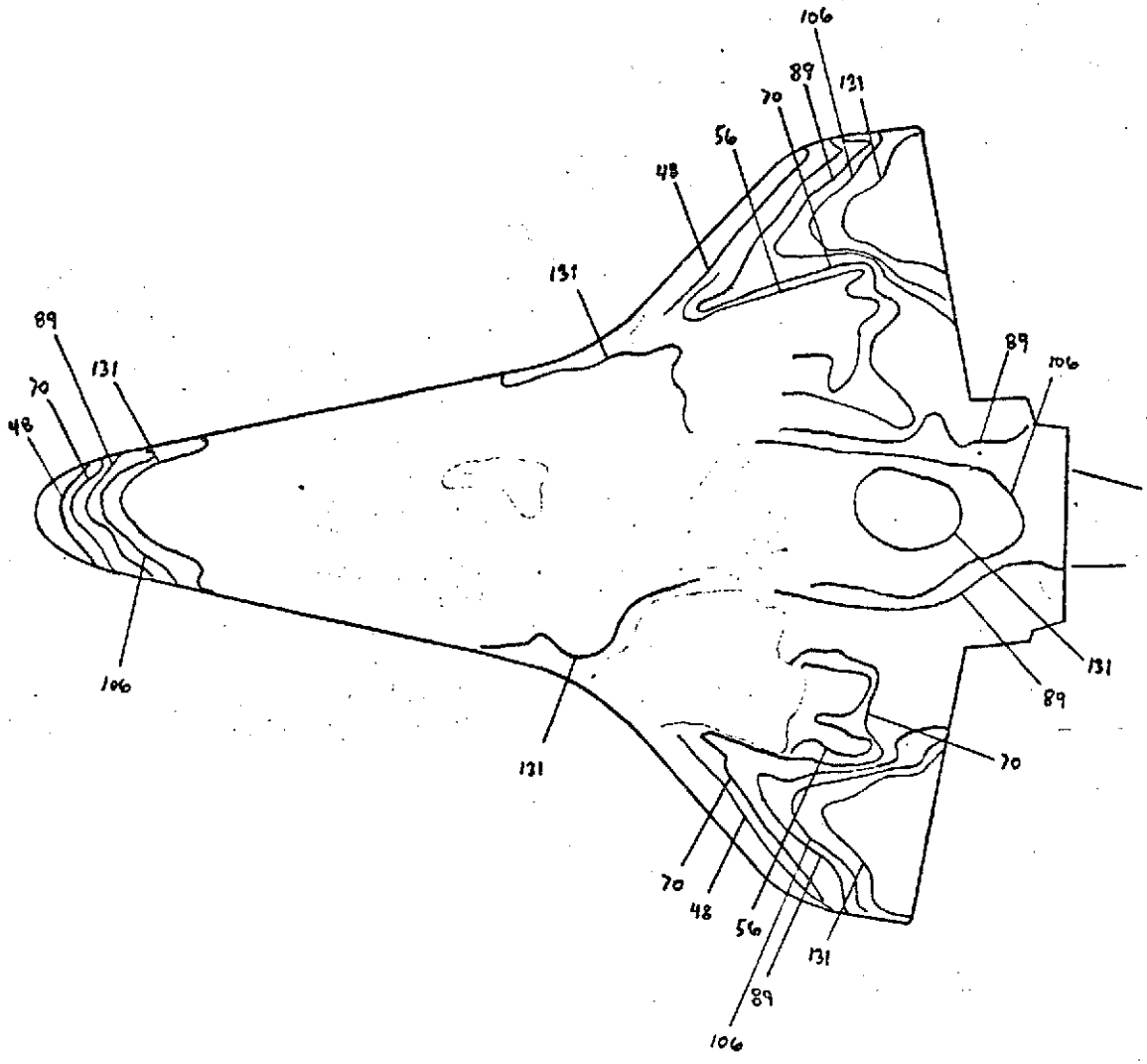

Isotherm	h/h_{ref}
48	.25938
56	.24014
70	.21479
89	.19048
106	.17454
131	.15700

FIG. 33

CONFIG. 46-2

LENGTH (ft) = .638

SCALE .00593

FACILITY LRC/HDT

TEST OH42B RPA

RUN 4132

M_∞ = 8

P_{total} (psi) = 1390

T_{total} (°F) = 925

T_{aw}/T_{total} = .92

R_N per foot = 6×10^6

$T_{phase\ change}$ (°F) = 500

α = 35°

β = 0

ϕ = 0

Camera Coordinates (from model center, x-axis parallel w/ stream, + downstream)

x (in) =

y (in) =

z (in) =

HS = .104924 BTU/FT²-SEC-°F

Frame 11 h.t ℄

G_R

HYD-EVCS

PHASE CHANGE TEST

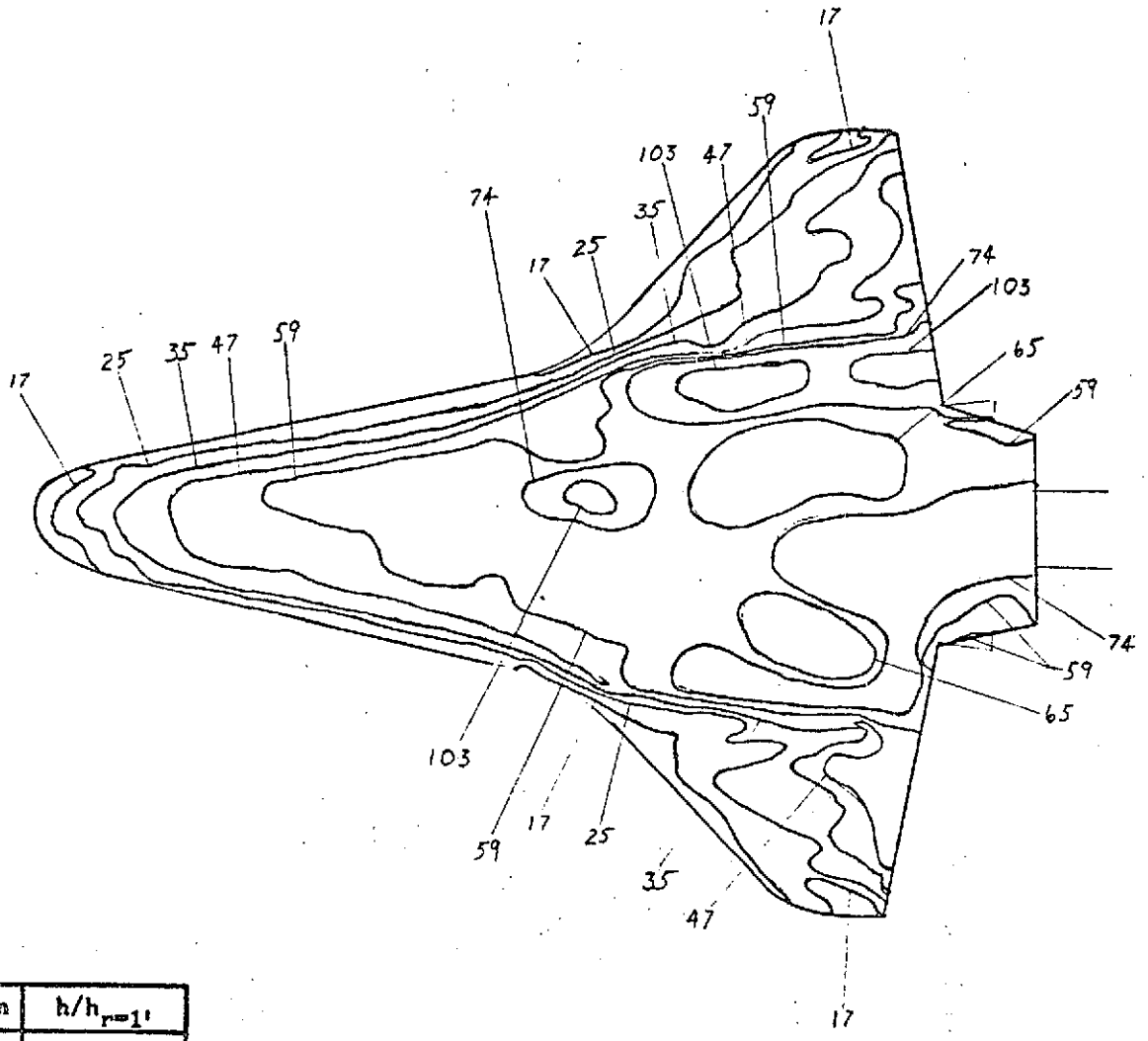

Isotherm	$h/h_{r=1'}$
17	.15242
25	.12569
35	.10623
47	.09167
59	.08182
65	.07795
74	.07306
103	.06192

FIG. 34

CONFIG. 46-4A

LENGTH (ft) = .638

SCALE .00593

FACILITY LRC/VDT

TEST OH42B (RPA)

RUN 4133

M_∞ = 8

P_{total} (psig) = 635

T_{total} (°F) = 880

T_{aw}/T_{total} = .92

R_N per foot = 3×10^6

$T_{phase\ change}$ (°F) = 250

α = 35°

β = 0

ϕ = 0

Camera Coordinates (from model center, x-axis parallel w/ stream, + downstream)

x (in) =

y (in) =

z (in) =

H_S = .07308 BTU/FT²-SEC-°F

HIT 2 FRAME 9

WAD

HVD-EVCS

NASA Langley (Feb. 1971)

PHASE CHANGE TEST

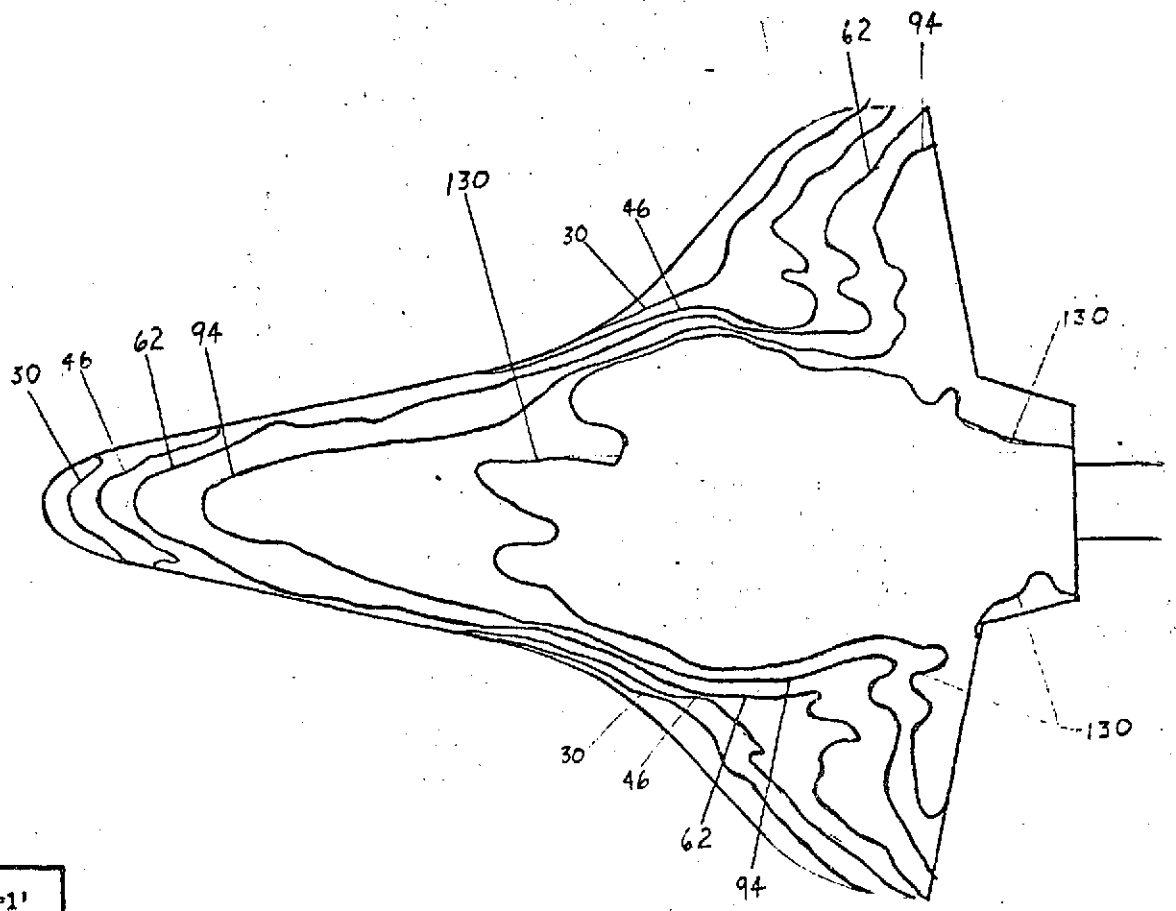

sotherm	$h/h_{r=1}$
30	.16902
46	.13690
62	.11757
94	.0955
130	.0812

FIG. 35

CONFIG.	46-2
LENGTH (ft) =	.638
SCALE	.00593
FACILITY	LRC/VDT
TEST	OH42B (RPA)
RUN	4134
M_∞ =	8
P_{total} (psig) =	625
T_{total} (°F) =	875
T_{aw}/T_{total} =	.92
R_N per foot =	3×10^6
$T_{phase\ change}$ (°F) =	300
α =	35°
β =	0
ϕ =	0
Camera Coordinates (from model center, x-axis parallel w/ stream, + downstream)	
x (in) =	
y (in) =	
z (in) =	

HIT @ FRAME 10
HS = .07315 BTU/FT² SEC-°F

HVD-EVCS

PHASE CHANGE TEST

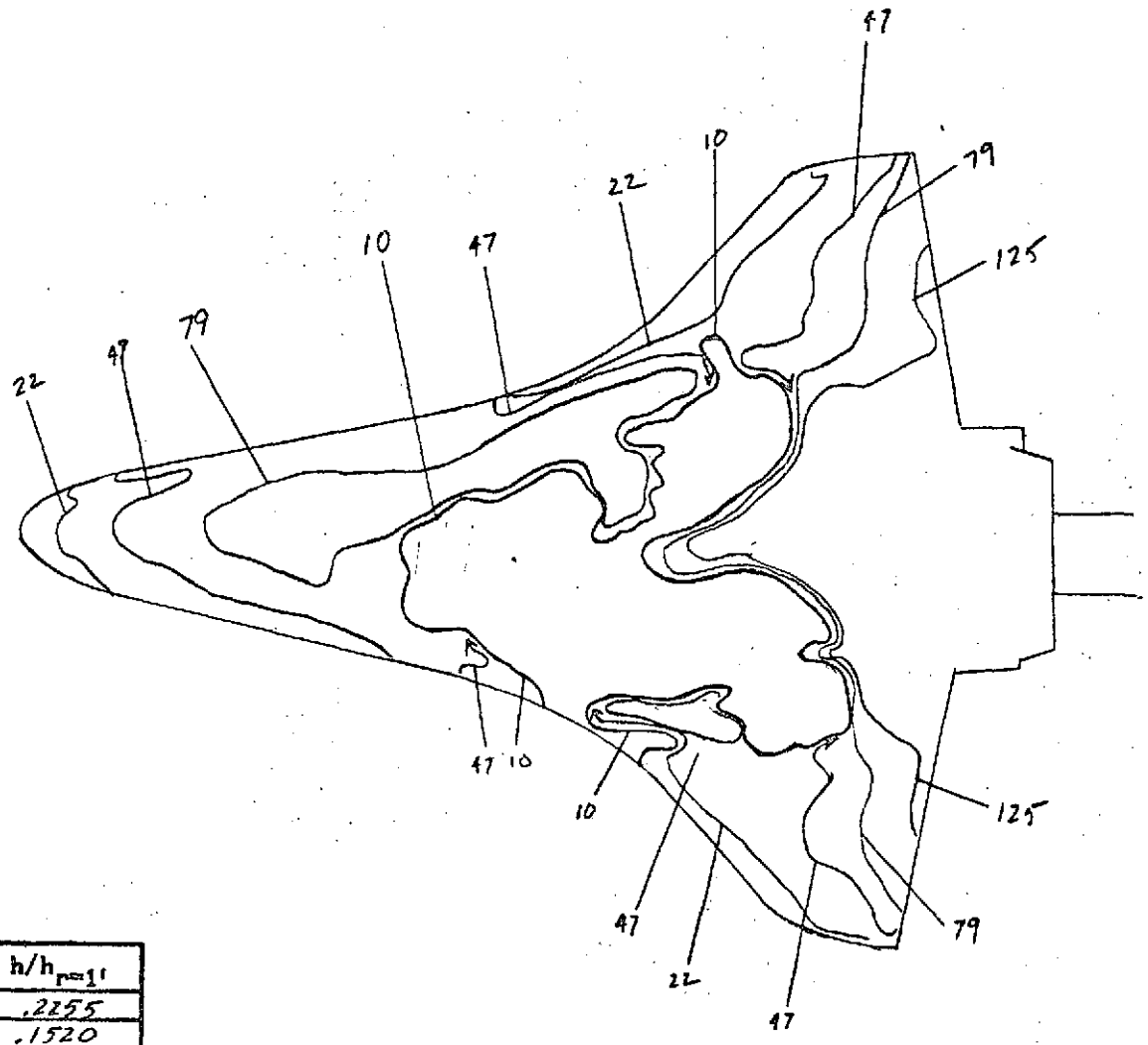

Isotherm	$h/h_{r=1'}$
10	.2255
22	.1520
47	.1040
79	.0802
125	.0638

FIG. 36

CONFIG. 46-2

LENGTH (ft) = .638

SCALE .00593

FACILITY LRC/VDT

TEST OH42B RPA

RUN 4135

M_∞ = 8

P_{total} (psig) = 154

T_{total} (°F) = 765

T_{aw}/T_{total} = .92

R_N per foot = 1×10^6

$T_{phase\ change}$ (°F) = 175

α = 35°

β = 0

ϕ = 0

Camera Coordinates (from model center, x-axis parallel w/ stream, + downstream)

x (in) =

y (in) =

z (in) =

HIT @ FRAME 10

HS = .03879 BTU/FT²-SEC-°R

L4D

PHASE CHANGE TEST

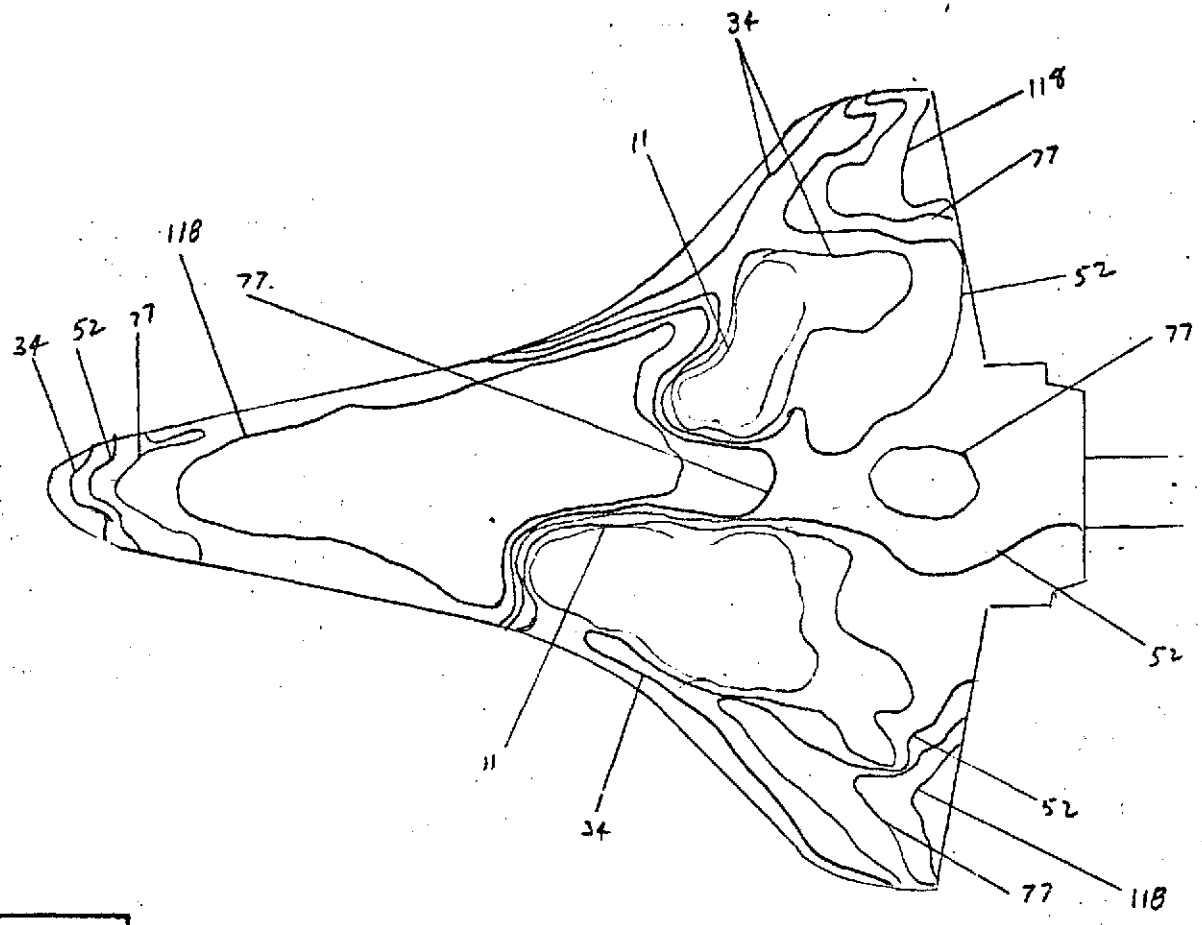

Isotherm	$h/h_{r=1'}$
11	.45862
39	.26086
52	.21094
77	.17334
118	.14003

FIG. 37

CONFIG. 46-2

LENGTH (ft) = .638

SCALE .00593

FACILITY LRC/VDT

TEST 0H42B (RPA)

RUN 4136

M_∞ = 8

P_{total} (psig) = 1355

T_{total} (°F) = 890

T_{aw}/T_{total} = .92

R_N per foot = 6×10^6

$T_{phase\ change}$ (°F) = 450

α = 35°

β = 0

ϕ = 0

Camera Coordinates (from model center, x-axis parallel w/ stream, + downstream)

x (in) =

y (in) =

z (in) =

HIT @ FRAME 11

H_S = .1035 BTU/FT²-SEC-°F (WALL)

PHASE CHANGE TEST

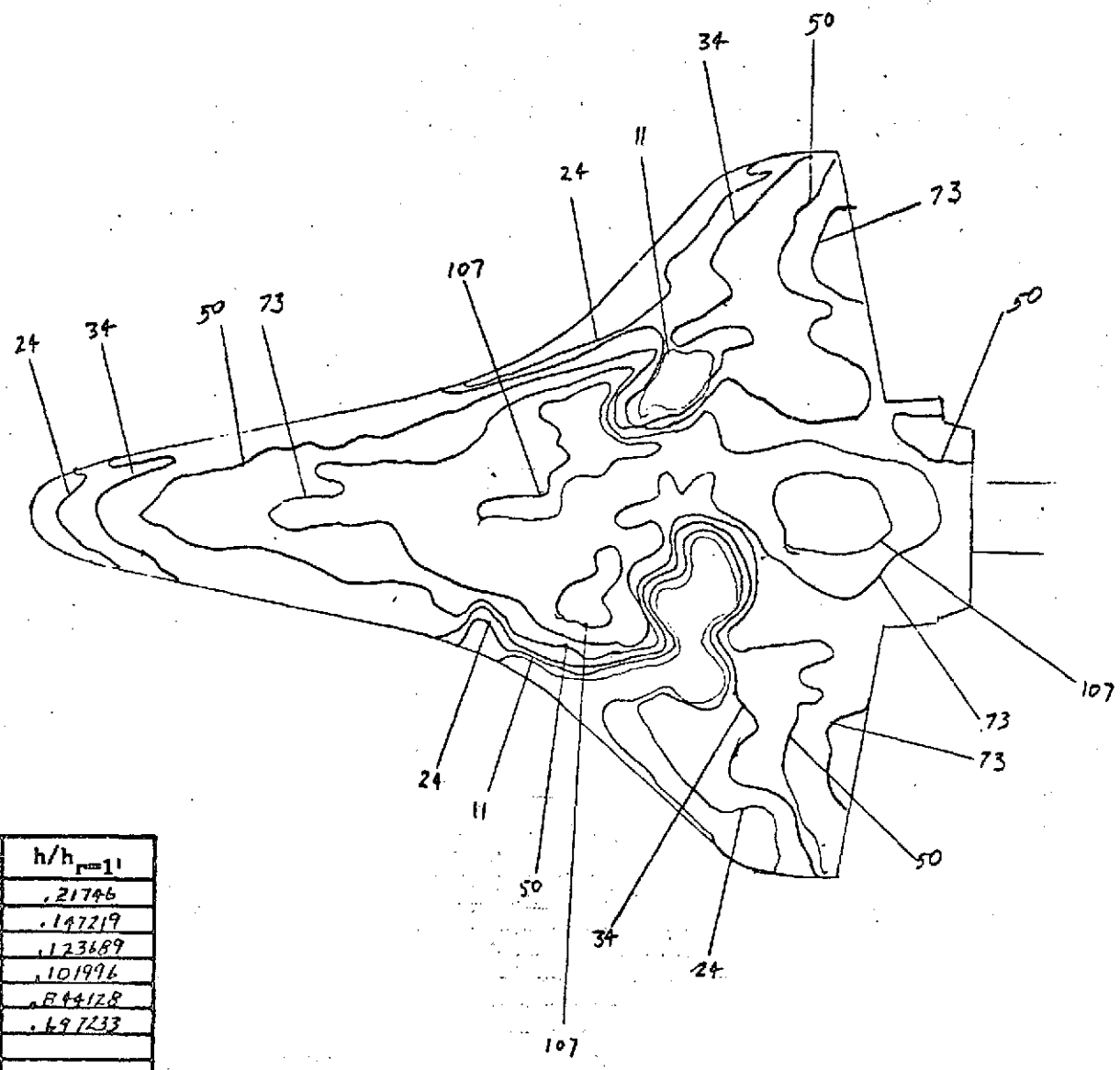

Isotherm	$h/h_{r=1'}$
11	.21746
24	.147219
34	.123689
50	.101996
73	.844128
107	.697233

FIG. 38

CONFIG. 46-2

LENGTH (ft) = .638

SCALE .00593

FACILITY LRC/VDT

TEST OH42B RPA

RUN 4137

M_∞ = 8

P_{total} (psig) = 850

T_{total} (°F) = 925

T_{aw}/T_{total} = .92

R_N per foot = 4×10^6

$T_{phase\ change}$ (°F) = 300

α = 35°

β = 0

ϕ = 0

Camera Coordinates (from model center, x-axis parallel w/ stream, + downstream)

x (in) =

y (in) =

z (in) =

HIT & FRAME 11

H_S = .08386 BTU/FT²-SEC-°F

WHD

PHASE CHANGE TEST

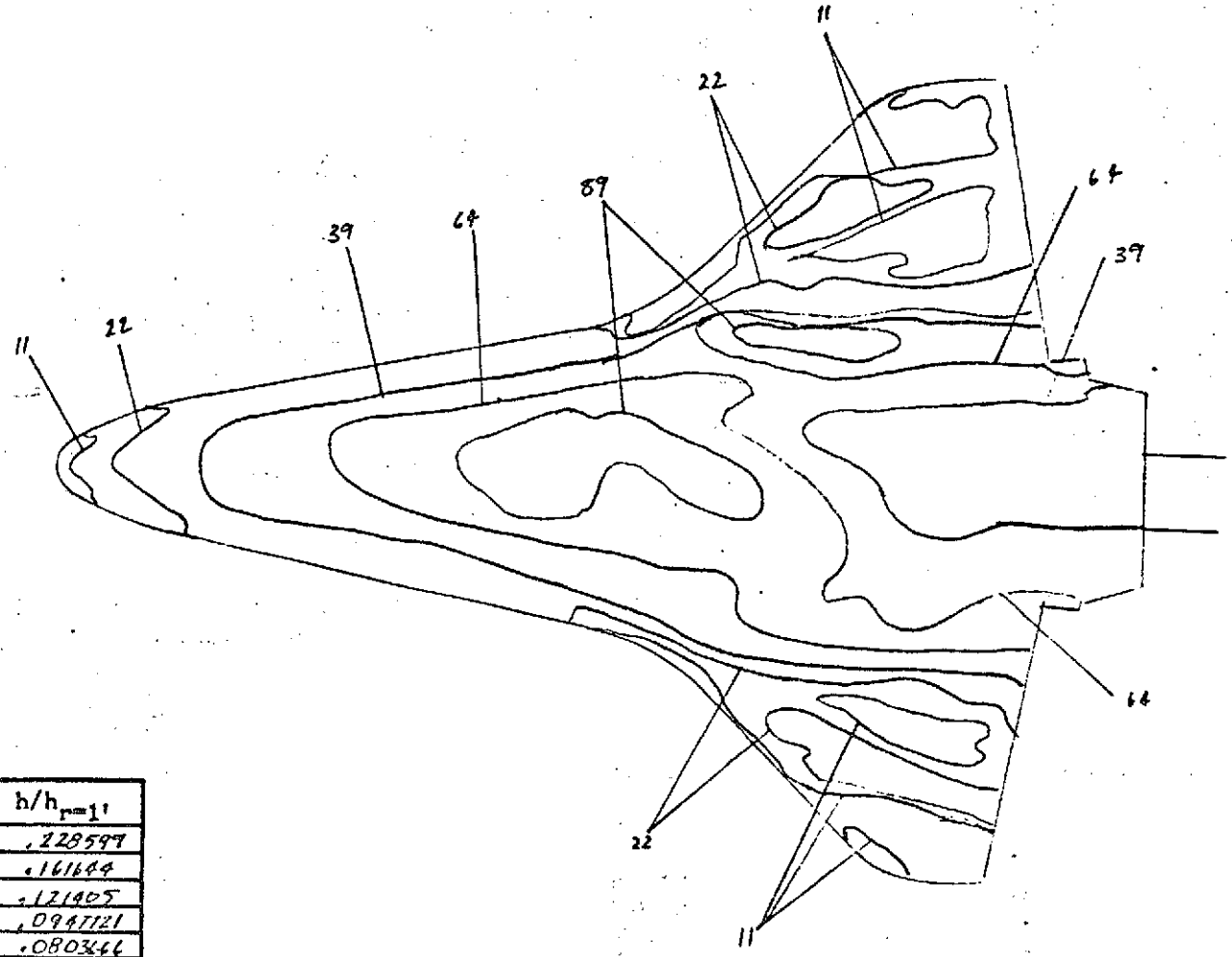

Isotherm	$h/h_{r=1'}$
11	.228597
22	.161644
39	.121405
64	.0947121
89	.0803446

FIG. 39

CONFIG. 46-4A

LENGTH (ft) = .638

SCALE .00593

FACILITY LRC/VDT

TEST OH4ZB (RPA)

RUN 4140

M_∞ = 8

P_{total} (psig) = 1615

T_{total} (°F) = 930

T_{aw}/T_{total} = .91

R_N per foot = 7×10^6

$T_{phase\ change}$ (°F) = 350

α = 30°

β = 0

ϕ = 0

Camera Coordinates (from model center, x-axis parallel w/ stream, + downstream)

x (in) =

y (in) =

z (in) =

HIT @ FRAME 11
HS = .112775 BTU/FT²-SEC-°F
WHD

PHASE CHANGE TEST

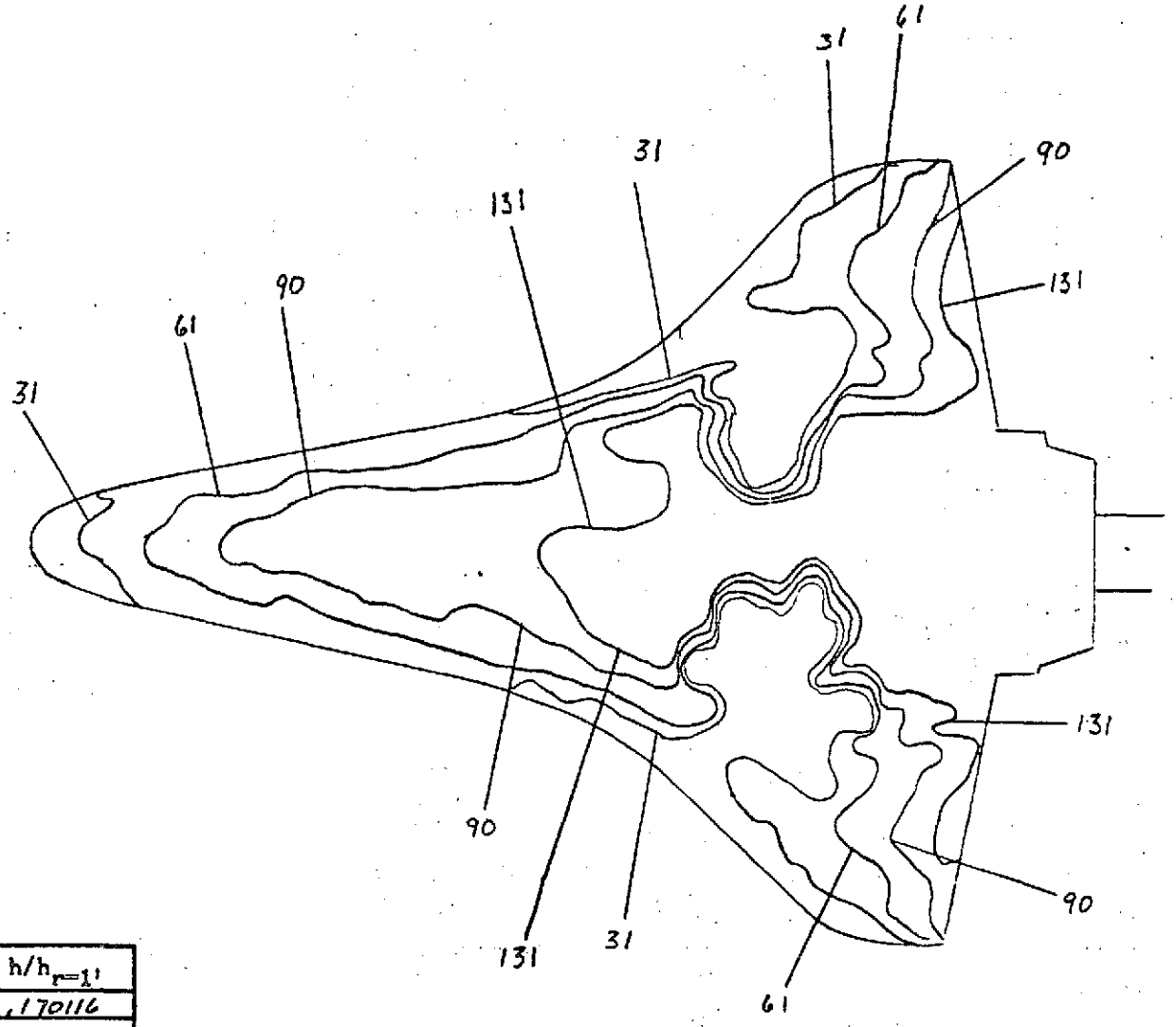

Isotherm	$h/h_{r=1'}$
31	.170116
61	.131272
90	.09984
131	.08275

FIG. 40

CONFIG. 46-2

LENGTH (ft) = .638

SCALE .00593

FACILITY LRC/VDT

TEST OH42B RPV

RUN 4141

M_∞ = 8

P_{total} (psig) = 635

T_{total} (°F) = 875

T_{aw}/T_{total} = .91

R_N per foot = 3×10^6

$T_{phase\ change}$ (°F) = 300

α = 30°

β = 0

ϕ = 0

Camera Coordinates (from model center, x-axis parallel w/ stream, + downstream)

x (in) =

y (in) =

z (in) =

HIT & FRAME LO

HS = .0731502 BTU/FT²-SEC°F

PHASE CHANGE TEST

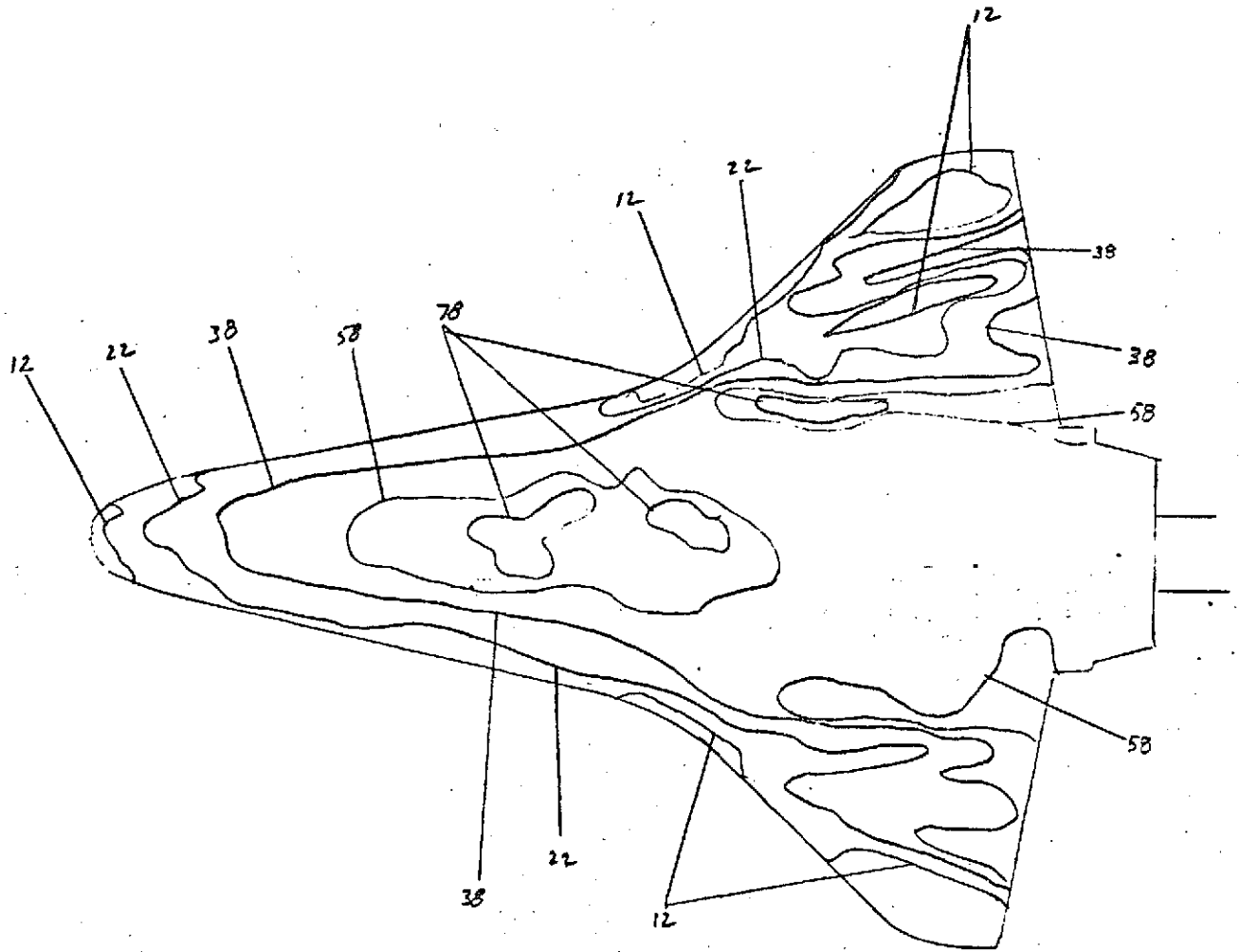

Isotherm	$h/h_{r=1'}$
12	.19222
22	.141969
38	.108018
58	.087433
78	.07539

FIG. 41

CONFIG.	46-4A
LENGTH (ft) =	.638
SCALE	.00593
FACILITY	LRC/VDT
TEST	OH42B (KPA)
RUN	4142
M_∞ =	8
P_{total} (psig) =	1120
T_{total} (°F) =	925
T_{aw}/T_{total} =	.91
R_N per foot =	6×10^6
$T_{phase\ change}$ (°F) =	300
α =	30
β =	0
ϕ =	0
Camera Coordinates (from model center, x-axis parallel w/ stream, + downstream)	
x (in) =	
y (in) =	
z (in) =	

HIT @ FRAME 11

HS: .09518 $BTU/FT^2 \cdot SEC \cdot {}^\circ F$

PHASE CHANGE TEST

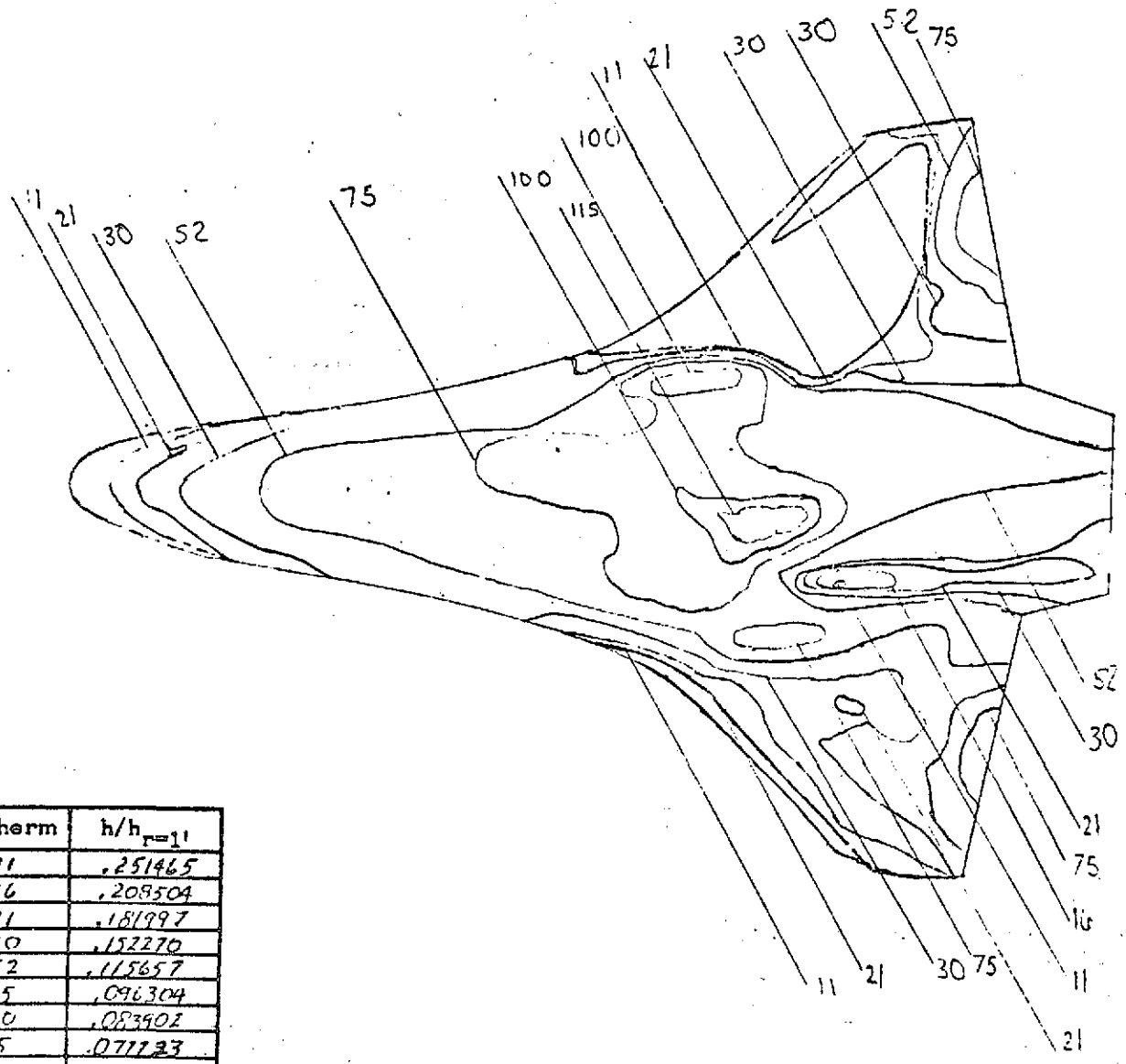

Isotherm	$h/h_{r=1'}$
11	.251465
16	.208504
21	.181997
30	.152270
52	.115657
75	.096304
100	.083902
115	.071733

FIG. 42

CONFIG. 46-2

LENGTH (ft) = .638

SCALE .00593

FACILITY LRC/VDT

TEST OH42B RPM

RUN 4143

M_∞ = 8

P_{total} (psig) = 1390

T_{total} (°F) = 915

T_{aw}/T_{total} = .91

R_N per foot = 6×10^6

$T_{phase\ change}$ (°F) = 350

α = 30

β = 0

ϕ = 0

Camera Coordinates (from model center, x-axis parallel w/ stream, + downstream)

x (in) =

y (in) =

z (in) =

HIT & FRAME 4

HS = .105092

MDS

HVD-EVCS

PHASE CHANGE TEST

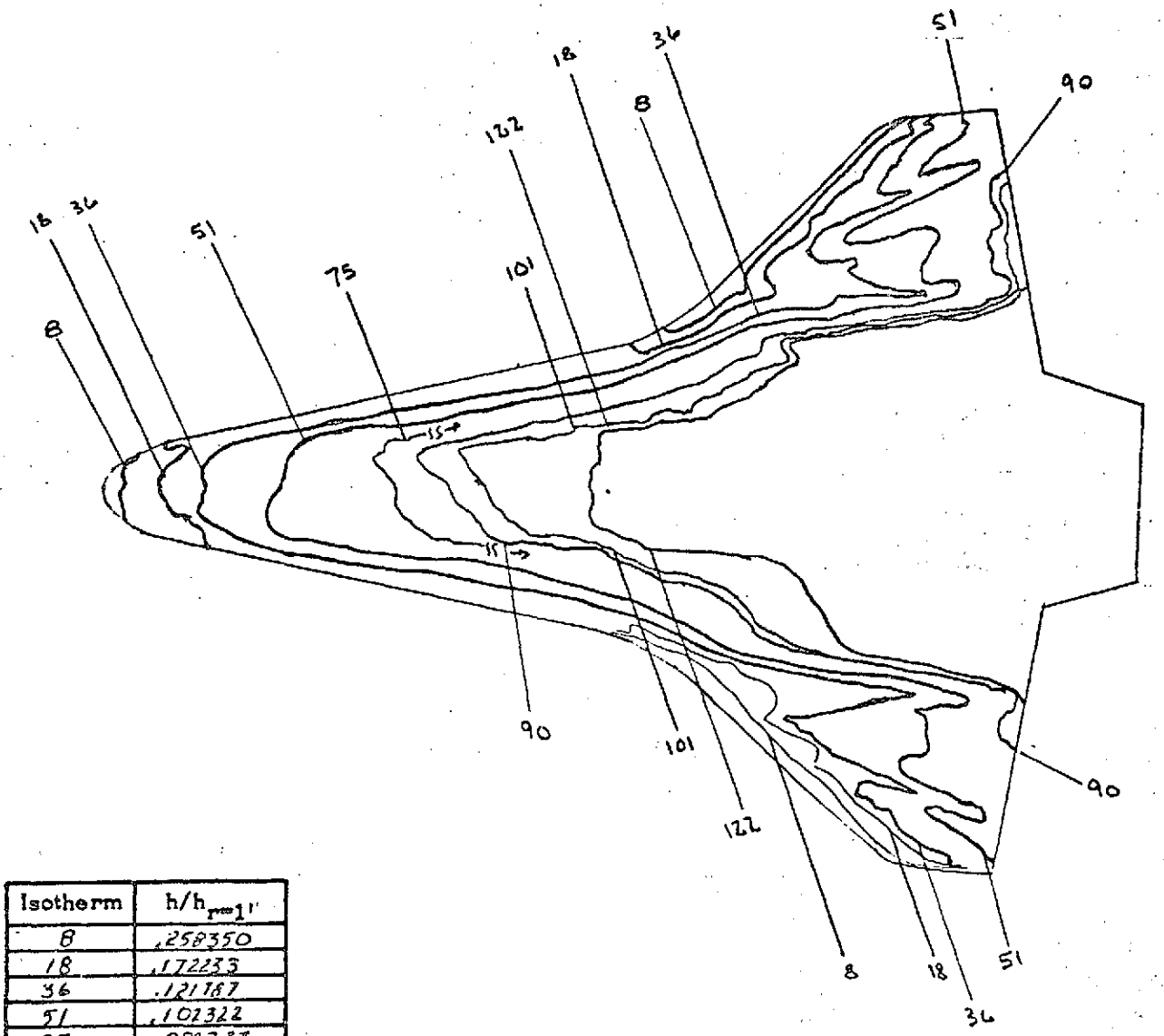

Isotherm	$h/h_{r=1'}$
8	.258350
18	.172233
36	.121187
51	.102322
75	.088377
90	.077025
101	.072710
122	.061157

FIG. 43

CONFIG. 46-AA

LENGTH (ft) = .638

SCALE .00593

FACILITY LRC/YDT

TEST OH42B (RPA)

RUN 4144

M_∞ = 8

P_{total} (psia) = 165

T_{total} (°R) = 760

T_{aw}/T_{total} = .91

R_N per foot = $1.X10^6$

$T_{phase\ change}$ (°F) = 175

α = 30°

β = 0

ϕ = 0

Camera Coordinates (from model center, x-axis parallel w/ stream, + downstream)

x (in) =

y (in) =

z (in) =

HS = .039912 $BTU/FT^2\text{-}SEC\text{-}°F$

PHASE CHANGE TEST

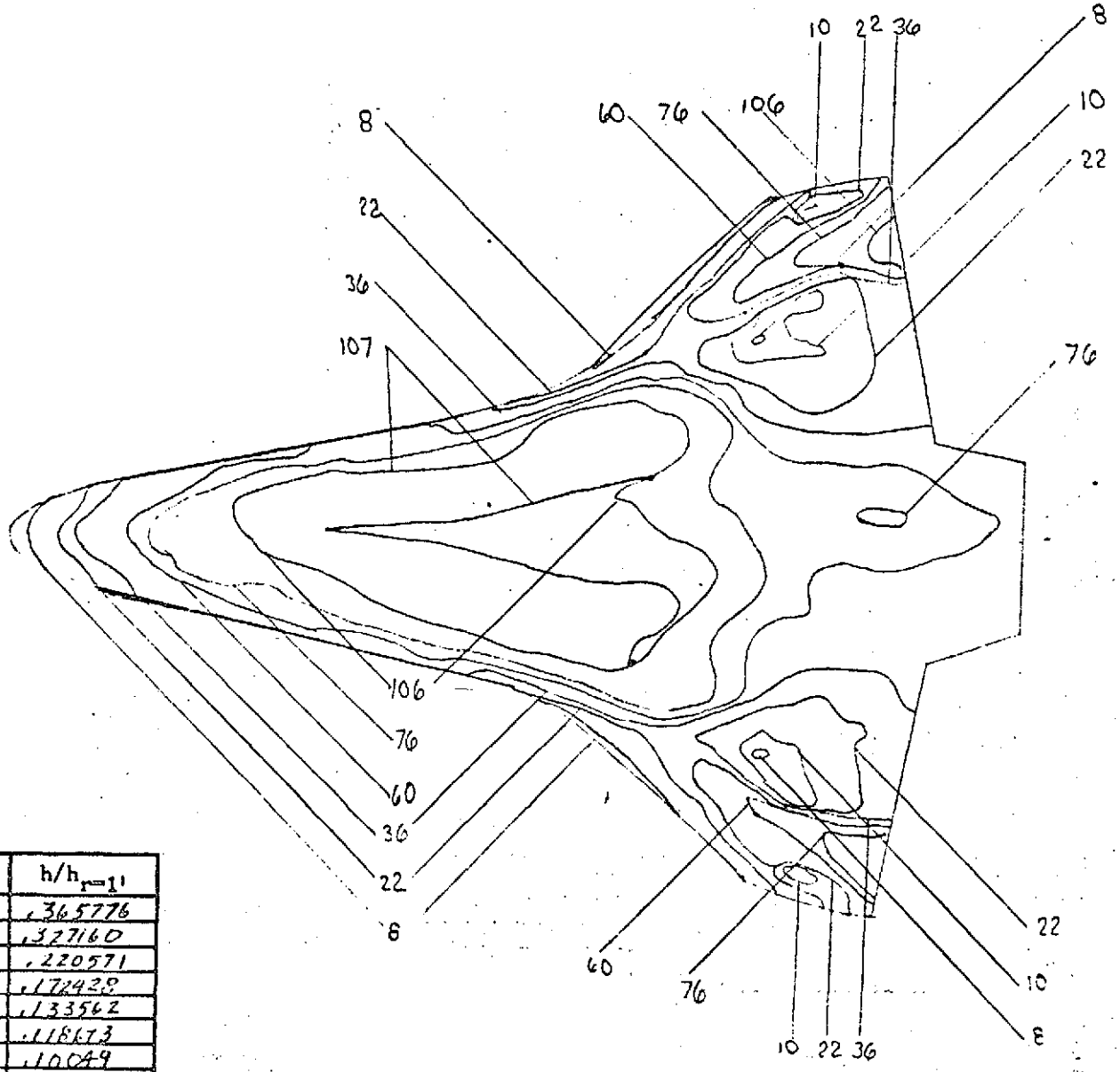

Isotherm	$h/h_{r=1}$
8	.365776
10	.327160
22	.220571
36	.172428
60	.133562
76	.116173
106	.10049
107	.10002

Fig. 44

CONFIG.	46-2
LENGTH (ft) =	.638
SCALE	.00593
FACILITY	LRC/VDT
TEST	0442B (RPA)
RUN	4145
M_∞ =	8
P_{total} (psig) =	1615
T_{total} (°F) =	915
T_{aw}/T_{total} =	.91
R_N per foot =	7×10^6
$T_{phase\ change}$ (°F) =	400
α =	30°
β =	0
ϕ =	0
Camera Coordinates (from model center, x-axis parallel w/ stream, + downstream)	
x (in) =	
y (in) =	
z (in) =	

HS = .112584 BTU/FT²-SEC-°F
MDS

PHASE CHANGE TEST

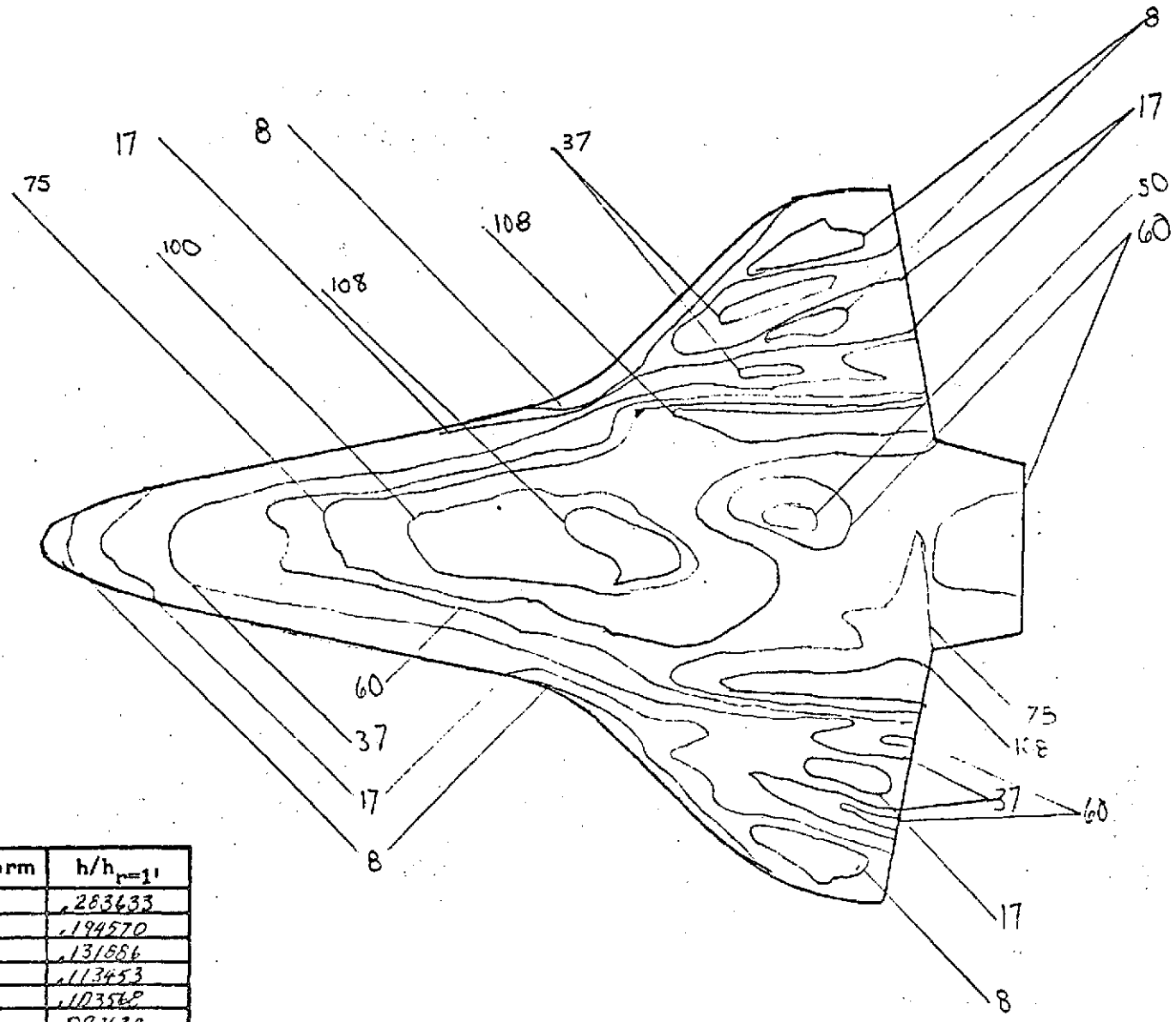

Isotherm	$h/h_{r=1}$
8	.283633
17	.194570
37	.131686
50	.113453
60	.103568
75	.092634
100	.080223
108	.077195

FIG. 45

CONFIG. 46-4A

LENGTH (ft) = .638

SCALE .00593

FACILITY LRC/VDT

TEST OH42B RPA

RUN 4146

M_∞ = 8

P_{total} (psig) = 1380

T_{total} (°F) = 935

T_{aw}/T_{total} = .91

R_N per foot = 6×10^6

$T_{phase\ change}$ (°F) = 350

α = 30°

β = 0

ϕ = 0

Camera Coordinates (from model center, x-axis parallel w/ stream, + downstream)

x (in) =

y (in) =

z (in) =

HS: .104895 BTU/FT²-SEC-°F

HVD-EVCS

PHASE CHANGE TEST

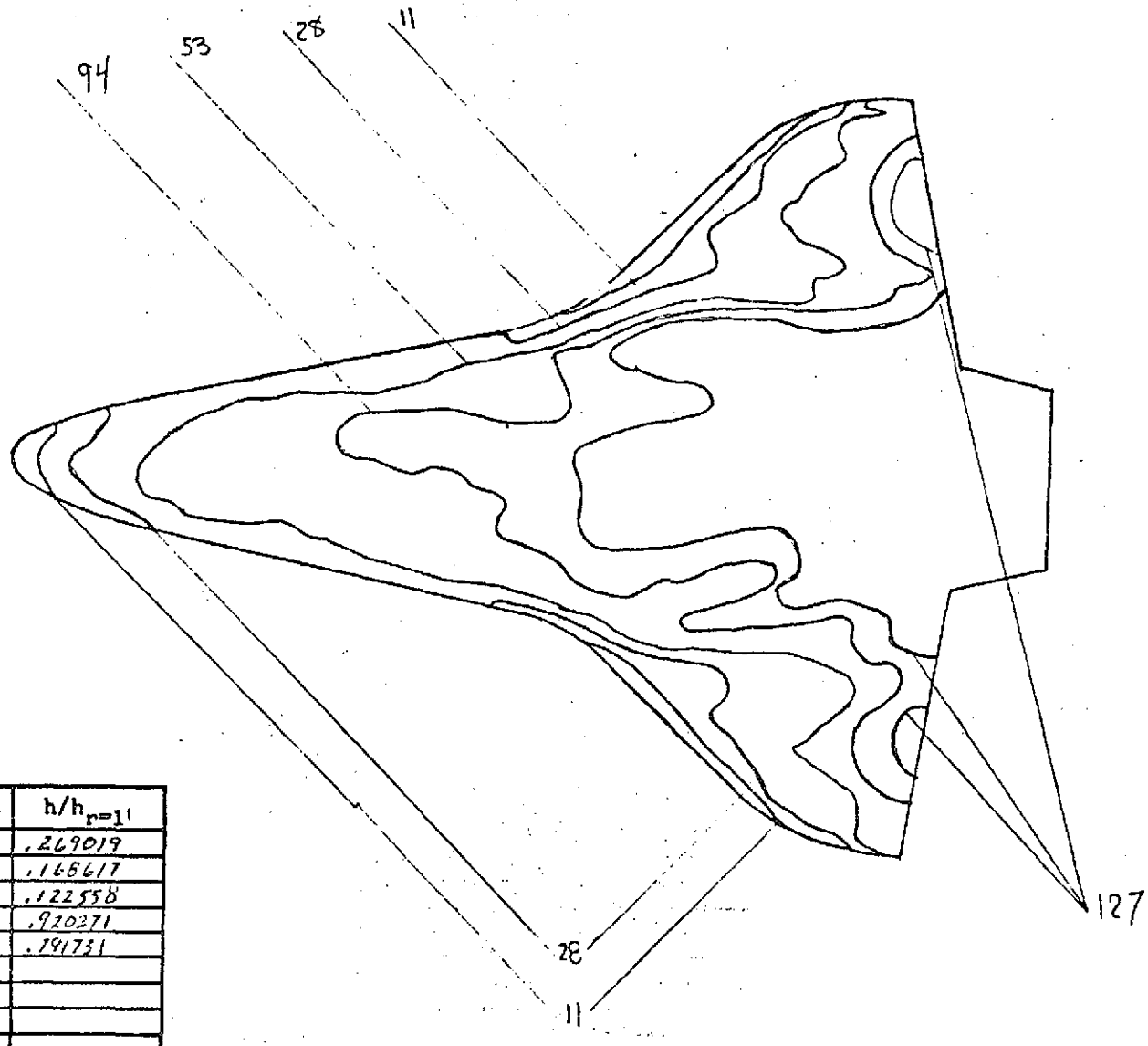

Isotherm	$h/h_{r=11}$
11	.269019
28	.166617
53	.122558
94	.920271
127	.191731

FIG. 46

CONFIG. 46-2

LENGTH (ft) = .638

SCALE .00593

FACILITY LRC/VDT

TEST OH42B RPA

RUN 4147

M_∞ = 8

P_{total} (psig) = 615

T_{total} (°F) = 910

T_{aw}/T_{total} = .91

R_N per foot = 3×10^6

$T_{phase\ change}$ (°F) = 300

α = 30

β = 0

ϕ = 0

Camera Coordinates (from model center, x-axis parallel w/ stream, + downstream)

x (in) =

y (in) =

z (in) =

HS = .072286 BTU/FT²-SEC-°F

MDS

HVD-EVCS

NASA Langley (Feb. 1971)

PHASE CHANGE TEST

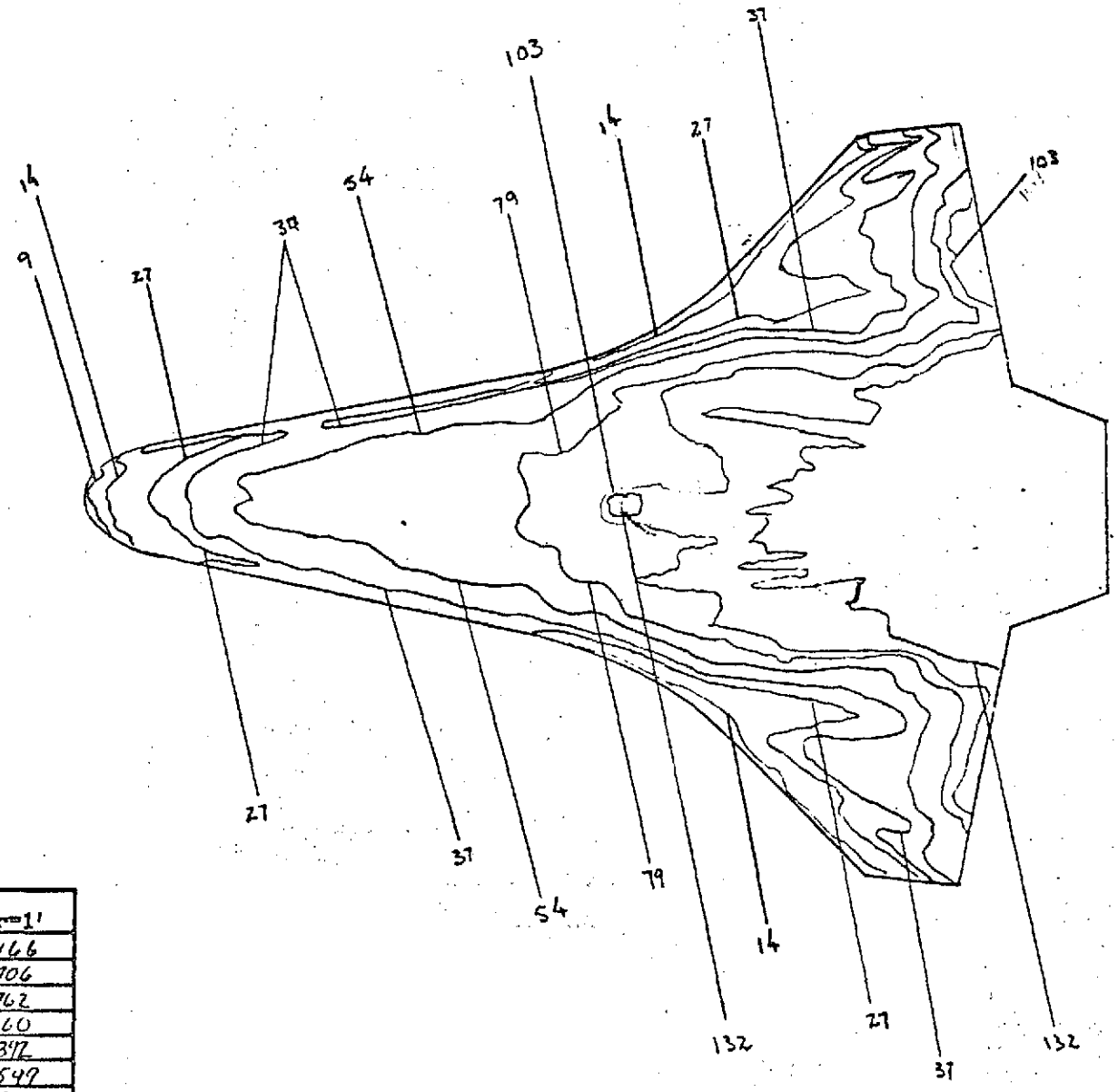

Isotherm	$h/h_{r=1'}$
9	.209166
14	.167706
27	.120762
37	.103160
54	.085392
79	.070549
103	.061629
132	.054617

FIG. 47

CONFIG. 46-2

LENGTH (ft) = .638

SCALE .00593

FACILITY LaRC

TEST OH42B - RPA

RUN 4148

M_∞ = 8

P_{total} (psig) = 165

T_{total} (°F) = 810

T_{aw}/T_{total} = .91

R_N per foot = 1×10^6

$T_{phase\ change}$ (°F) = 175

α = 30

β = 0

ϕ = 0

Camera Coordinates (from model center, x-axis parallel w/ stream, + downstream)

x (in) =

y (in) =

z (in) =

Heat Shield

$H_S = .04008\ BTU/FT^2\text{-}SEC\text{-}°F$

PHASE CHANGE TEST

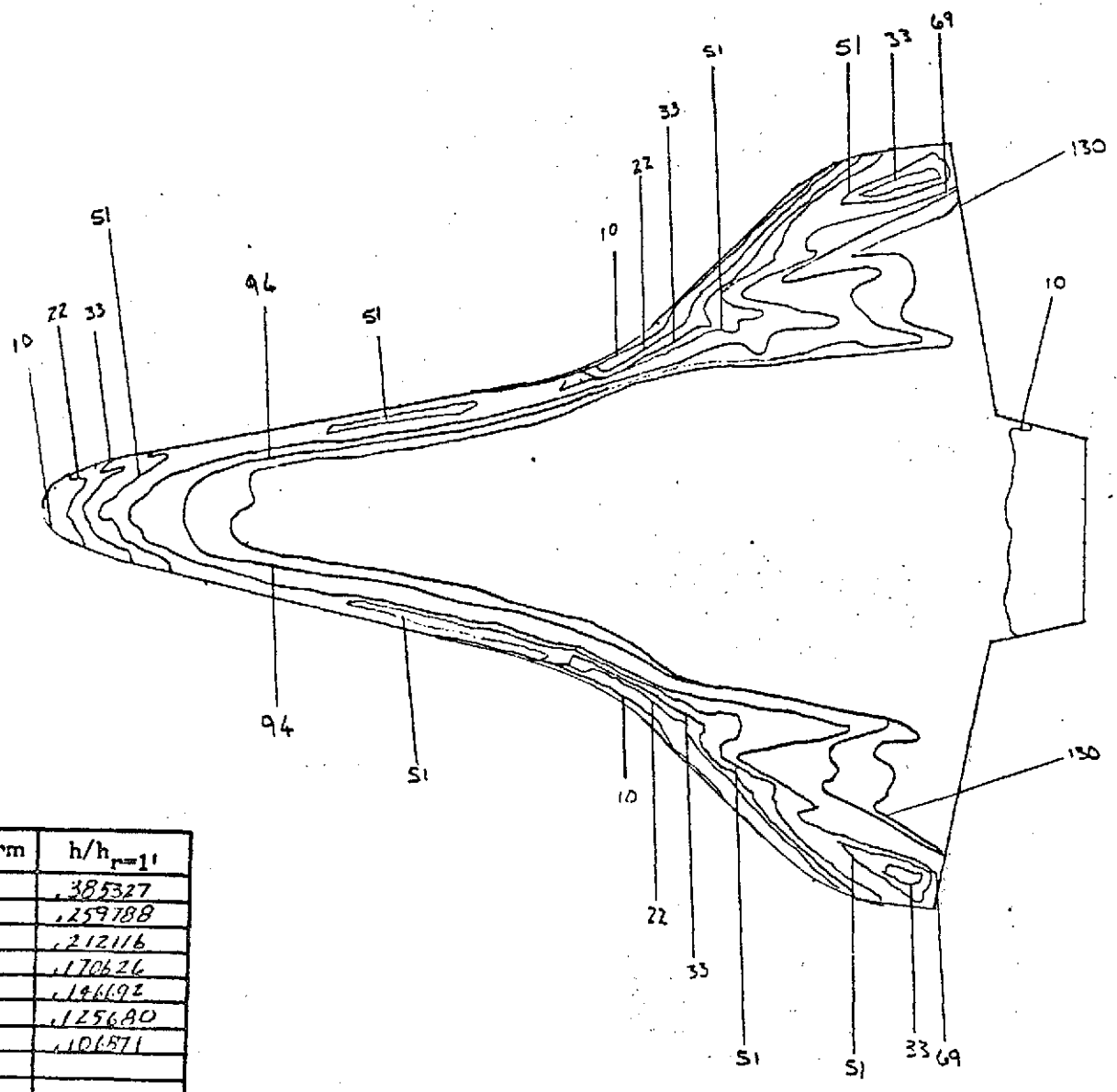

Isotherm	$h/h_{r=1'}$
10	.385327
22	.259788
33	.212116
51	.170626
69	.146692
94	.125680
130	.101671

FIG. 48

CONFIG. 46-4ABF

LENGTH (ft) = .638

SCALE .00593

FACILITY LRC/VDT

TEST OH42B RPA

RUN 4150

M_∞ = 8

P_{total} (psig) = 635

T_{total} (°F) = 900

T_{aw}/T_{total} = .91

R_N per foot = 3×10^6

$T_{phase\ change}$ (°F) = 350

α = 30°

β = 0

ϕ = 0

Camera Coordinates (from model center, x-axis parallel w/ stream, + downstream)

x (in) =

y (in) =

z (in) =

NITS & CN FRAME 10

HS = .0732989 BTU/FT²-SEC-°R

HVD-FVCS

NASA Langley (Feb. 1971)

PHASE CHANGE TEST

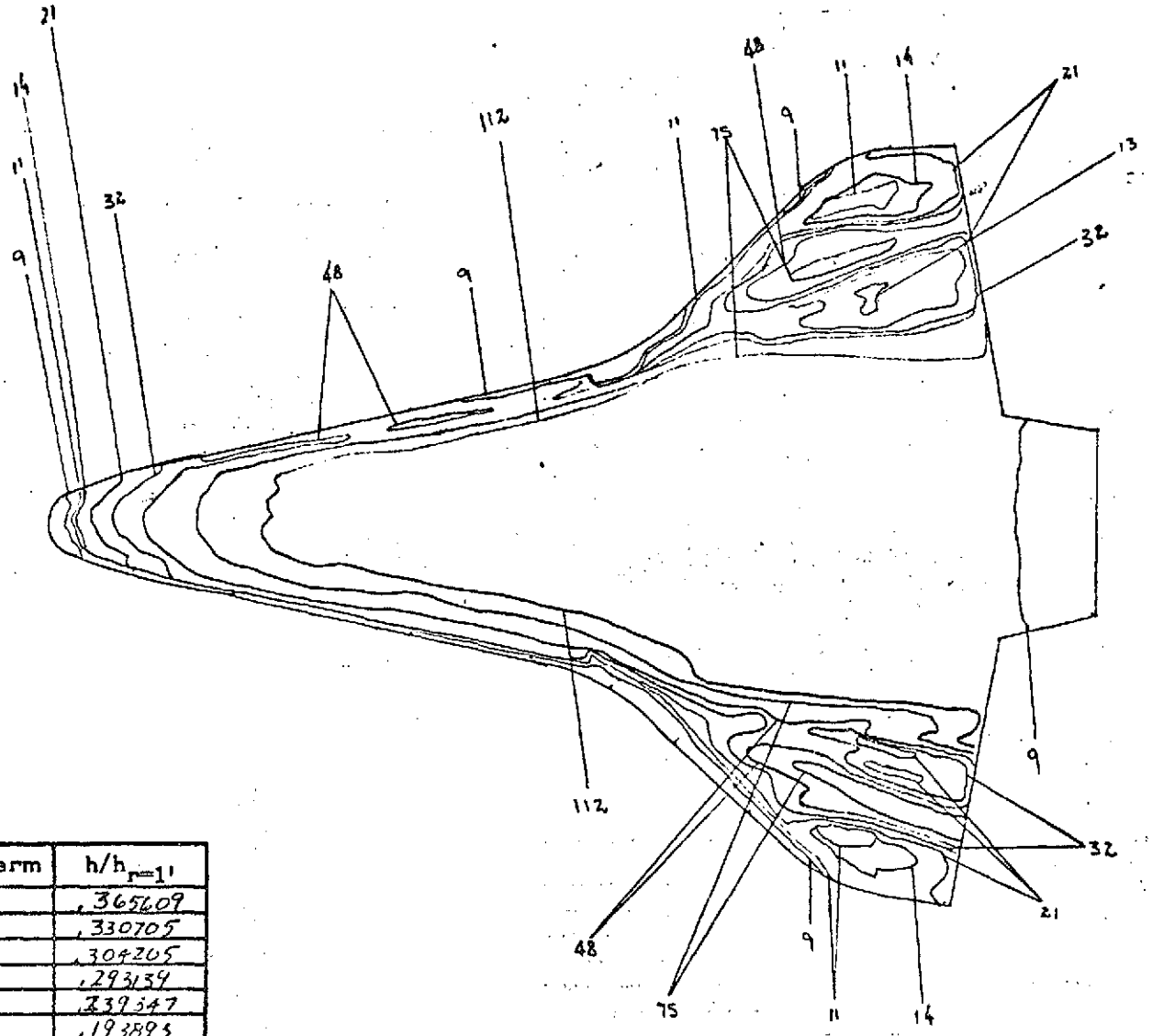

Isotherm	$h/h_{r=1'}$
9	.365609
11	.330705
13	.304205
14	.293139
21	.239347
32	.193893
48	.158313
75	.126651
112	.103640

FIG. 49

CONFIG. 46-4ABF

LENGTH (ft) = .638

SCALE .00593

FACILITY LRC/VDT

TEST OH42B RPA

RUN 4152

M_∞ = 8

P_{total} (psig) = 1405

T_{total} (°F) = 900

T_{aw}/T_{total} = .91

R_N per foot = 6×10^6

$T_{phase\ change}$ (°F) = 400

α = 30°

β = 0

ϕ = 0

Camera Coordinates (from model center, x-axis parallel w/ stream, + downstream)

x (in) =

y (in) =

z (in) =

HAS ℄ 1-9 FRAMES

HS = .105513 BTU/FT²-SEC-°F

NASA Langley (Feb. 1971)

HVD-EVCS

PHASE CHANGE TEST

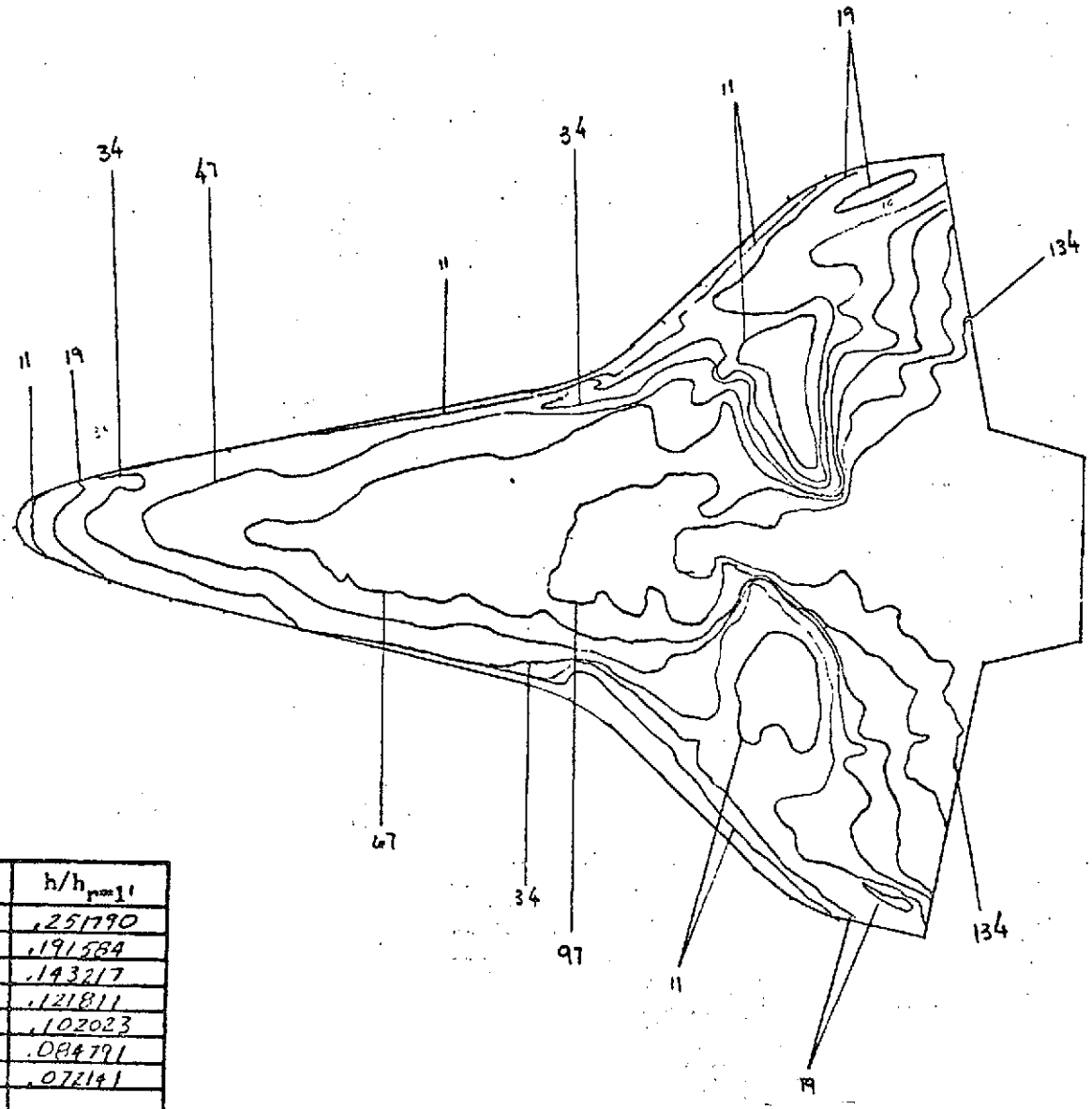

Isotherm	$h/h_{r=1'}$
11	.251790
19	.191584
34	.143217
47	.121811
67	.102023
97	.084791
134	.072141

FIG. 50

CONFIG. 46-1

LENGTH (ft) = .638

SCALE .00593

FACILITY LRC/VDT

TEST OH42B RPA

RUN 4153

M_∞ = 8

P_{total} (psig) = 640

T_{total} (°F) = 920

T_{aw}/T_{total} = .91

R_N per foot = 3×10^6

$T_{phase\ change}$ (°F) = 300

α = 30°

β = 0

ϕ = 0

Camera Coordinates (from model center, x-axis parallel w/ stream, + downstream)

x (in) =

y (in) =

z (in) =

Hits ℄ in to Phase

HS = .786593 BTU/FT²-SEC-°F

NASA Langley (Feb. 1971)

HVD-EVCS

PHASE CHANGE TEST

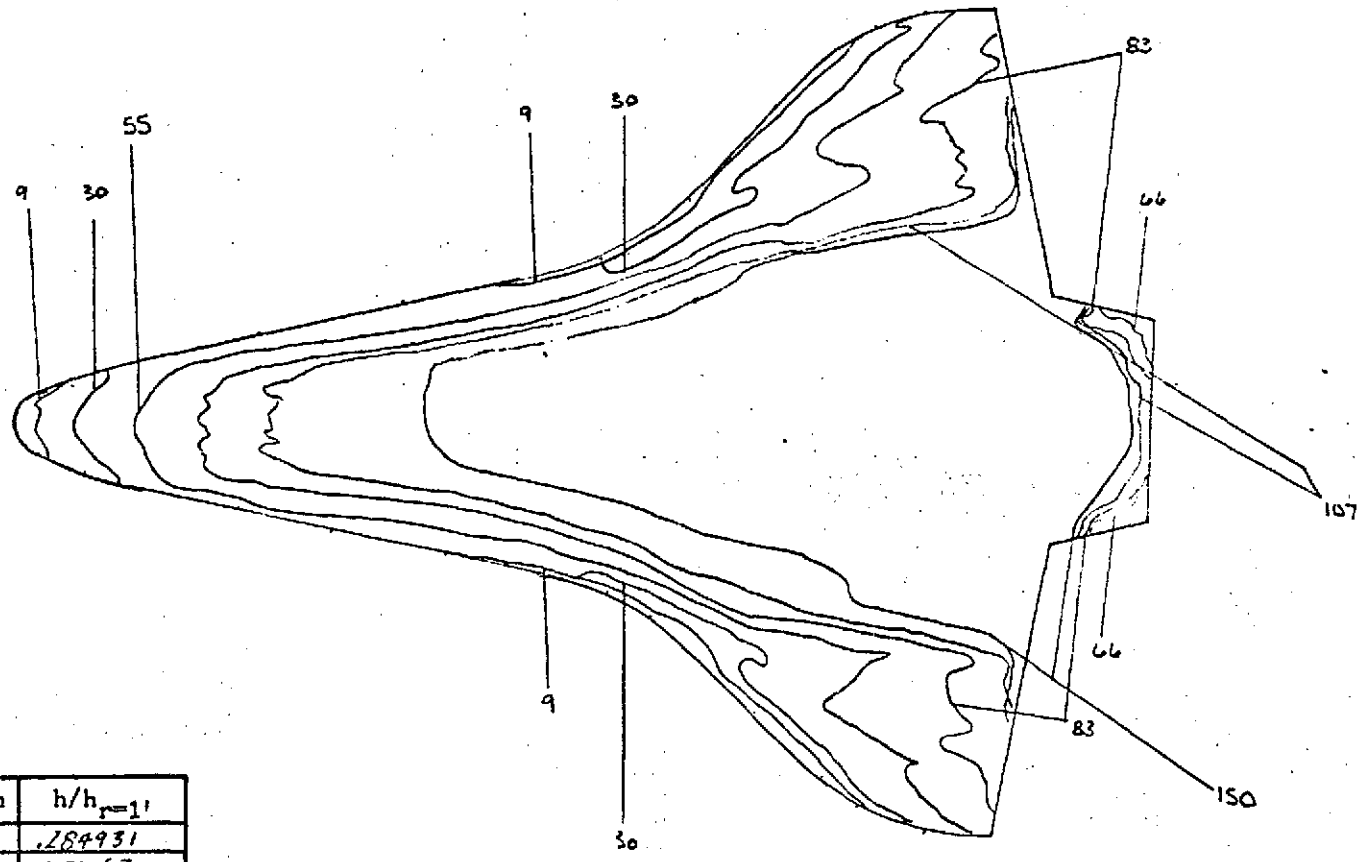

Isotherm	$h/h_{r=1'}$
9	.284931
30	.156063
55	.115260
66	.105218
83	.093526
107	.082636
150	.069194

FIG. 51

CONFIG. 46-4ABF

LENGTH (ft) = .638

SCALE .00593

FACILITY LRC/VDT

TEST OH42B RPA

RUN 4154

M_∞ = 8

P_{total} (psig) = 160

T_{total} (°F) = 795

T_{aw}/T_{total} = .91

R_N per foot = 1×10^6

$T_{phase\ change}$ (°F) = 200

α = 3.0°

β = 0

ϕ = 0

Camera Coordinates (from model center, x-axis parallel w/ stream, + downstream)

x (in) =

y (in) =

z (in) =

Hits & 1st 9 Frames

HS = .039566 BTU/FT²-SEC-°F

PHASE CHANGE TEST

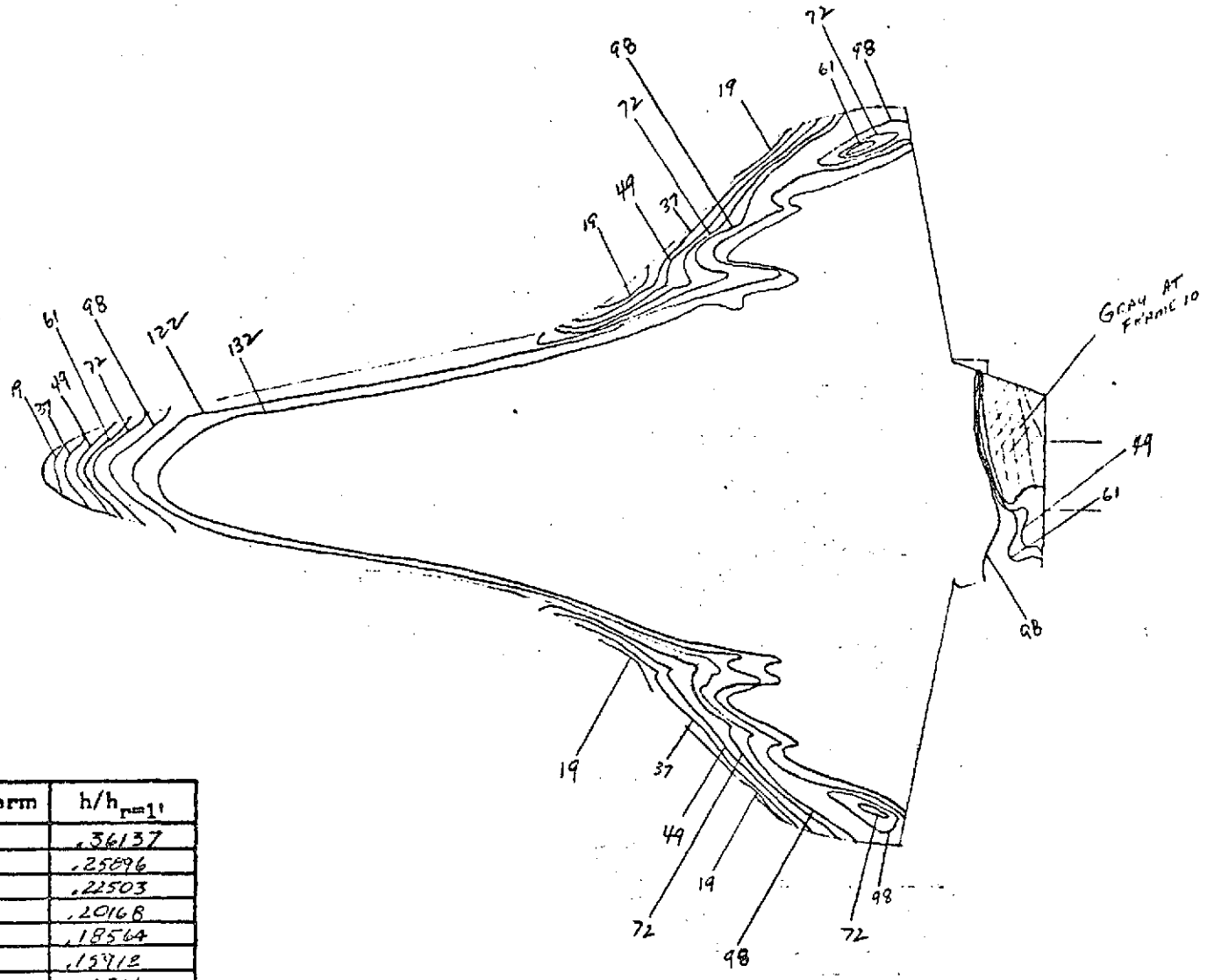

Isotherm	$h/h_{p=1}$
19	.36137
37	.25896
49	.22503
61	.20168
72	.18564
98	.15912
122	.14261
132	.13710

FIG. 52

CONFIG. 46-4ABF

LENGTH (ft) = .638

SCALE .00593

FACILITY LRC/VDT

TEST OH42B RPA

RUN 4155

M_∞ = 8

P_{total} (psig) = 630

T_{total} (°F) = 910

T_{aw}/T_{total} = .91

R_N per foot = 3×10^6

$T_{phase\ change}$ (°F) = 400

α = 30°

β = 0

ϕ = 0

Camera Coordinates (from model center, x-axis parallel w/ stream, + downstream)

x (in) =

y (in) =

z (in) =

ρ AT FRAME 10

HS = .0730472 BTU/FT²-SEC-°F

HVD-EVCS

PHASE CHANGE TEST

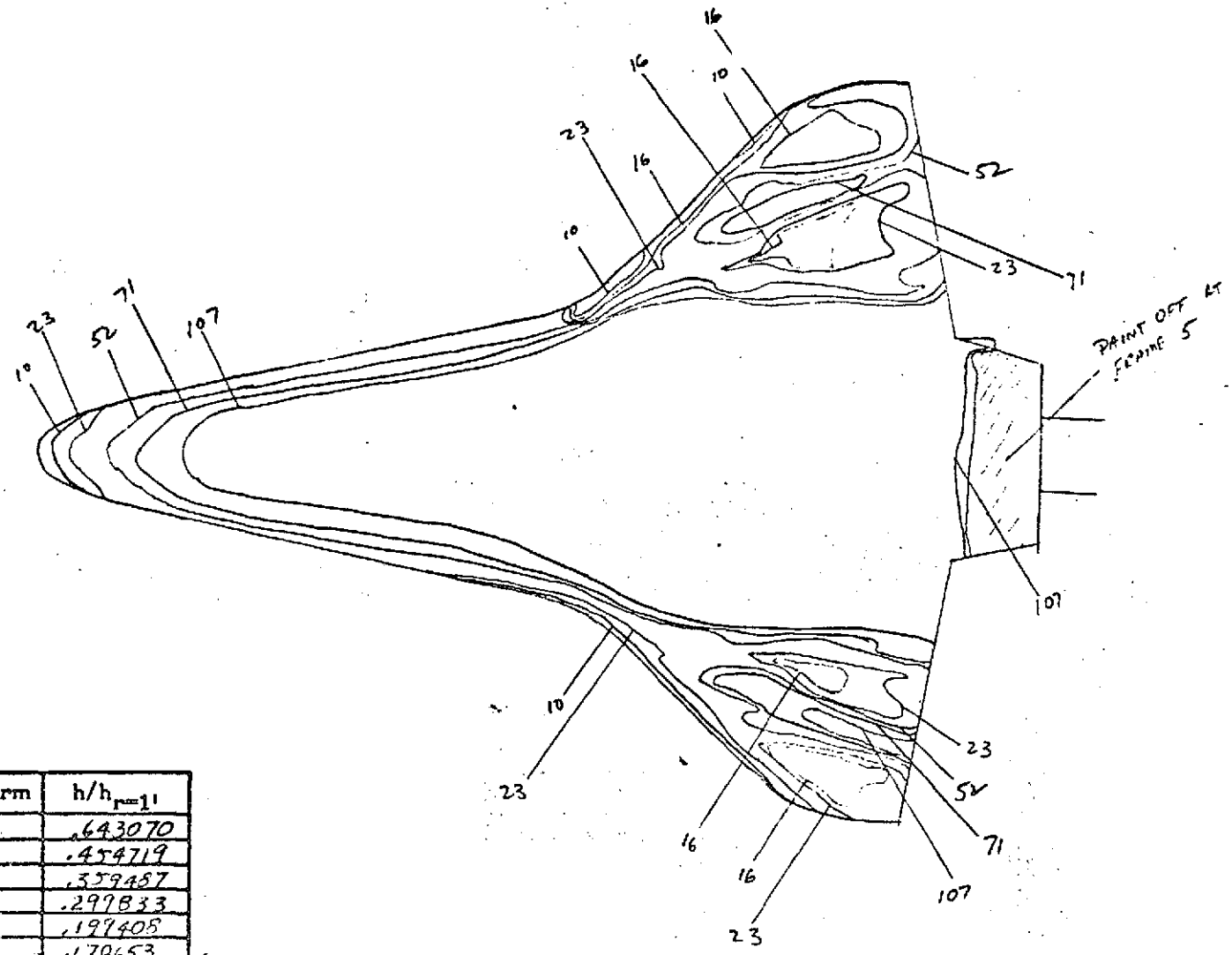

Isotherm	$h/h_{r=1'}$
5	.643070
10	.454719
16	.359487
23	.299833
52	.199408
71	.170653
107	.134012

FIG. 53

CONFIG. 46-4ABF

LENGTH (ft) = .638

SCALE .00593

FACILITY LRC/VDT

TEST OH42B RPA

RUN 4156

M_∞ = 8

P_{total} (psig) = 1385

T_{total} (°F) = 915

T_{aw}/T_{total} = .91

R_N per foot = 6×10^6

$T_{phase\ change}$ (°F) = 450

α = 30°

β = 0

ϕ = 0

Camera Coordinates (from model center, x-axis parallel w/ stream, + downstream)

x (in) =

y (in) =

z (in) =

℄ AT FRAME 10

HS = .104761 BTU/FT²-SEC-°F

HVD-EVCS

PHASE CHANGE TEST

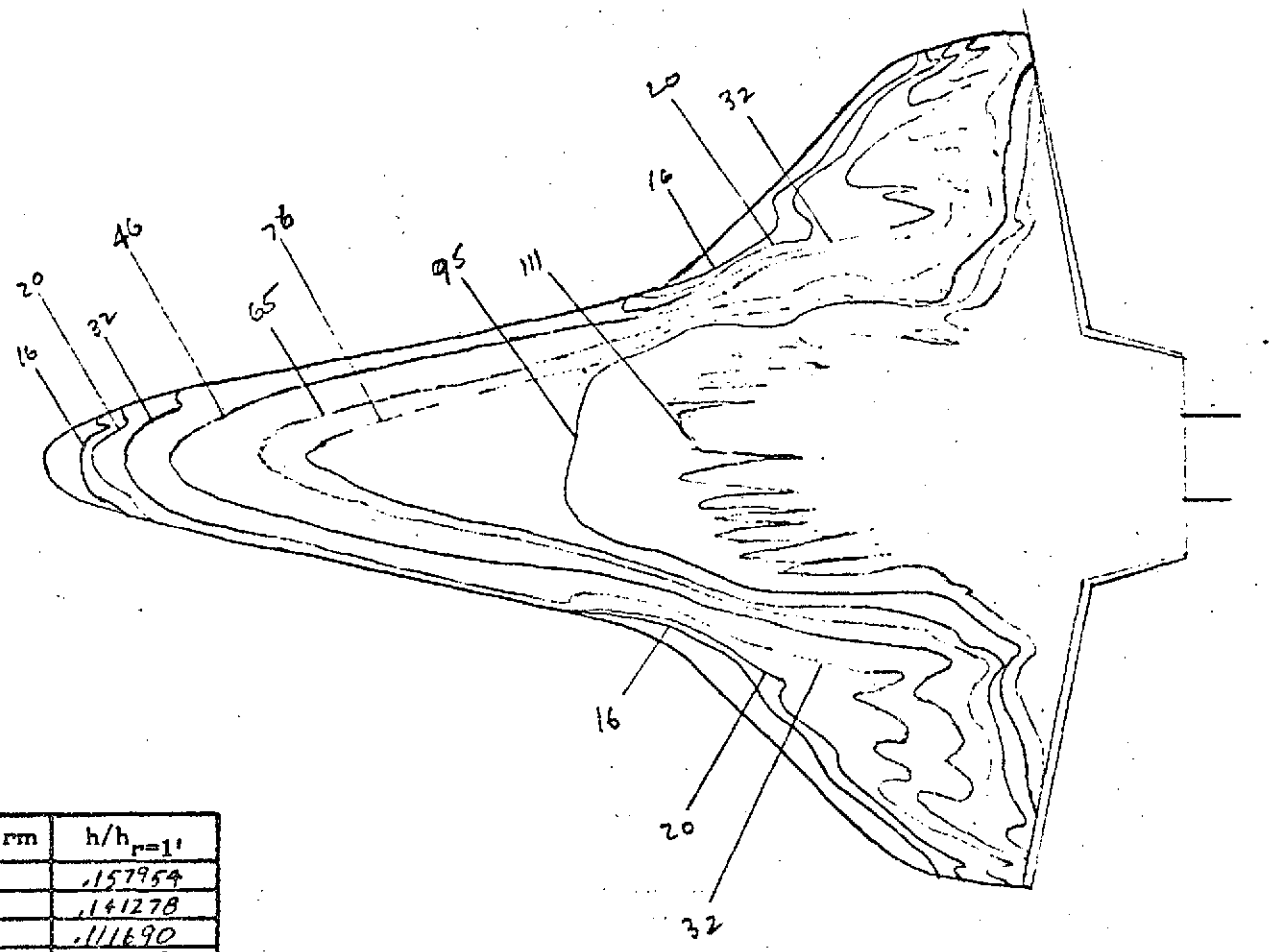

Isotherm	$h/h_{r=1'}$
16	.157954
20	.141278
32	.111690
46	.093156
65	.078367
76	.072474
95	.064823
111	.059969

FIG. 59

CONFIG. 46-1

LENGTH (ft) = .638

SCALE .00593

FACILITY LRC/VDT

TEST OH42B RPA

RUN 4158

M_∞ = 8

P_{total} (psig) = 163

T_{total} (°F) = 780

T_{aw}/T_{total} = .91

R_N per foot = 1×10^6

$T_{phase\ change}$ (°F) = 175

α = 30

β = 0

ϕ = 0

Camera Coordinates (from model center, x-axis parallel w/ stream, + downstream)

x (in) =

y (in) =

z (in) =

℄ for Frame 10

HS = .0397758 BTU/FT²-SEC-°F

PHASE CHANGE TEST

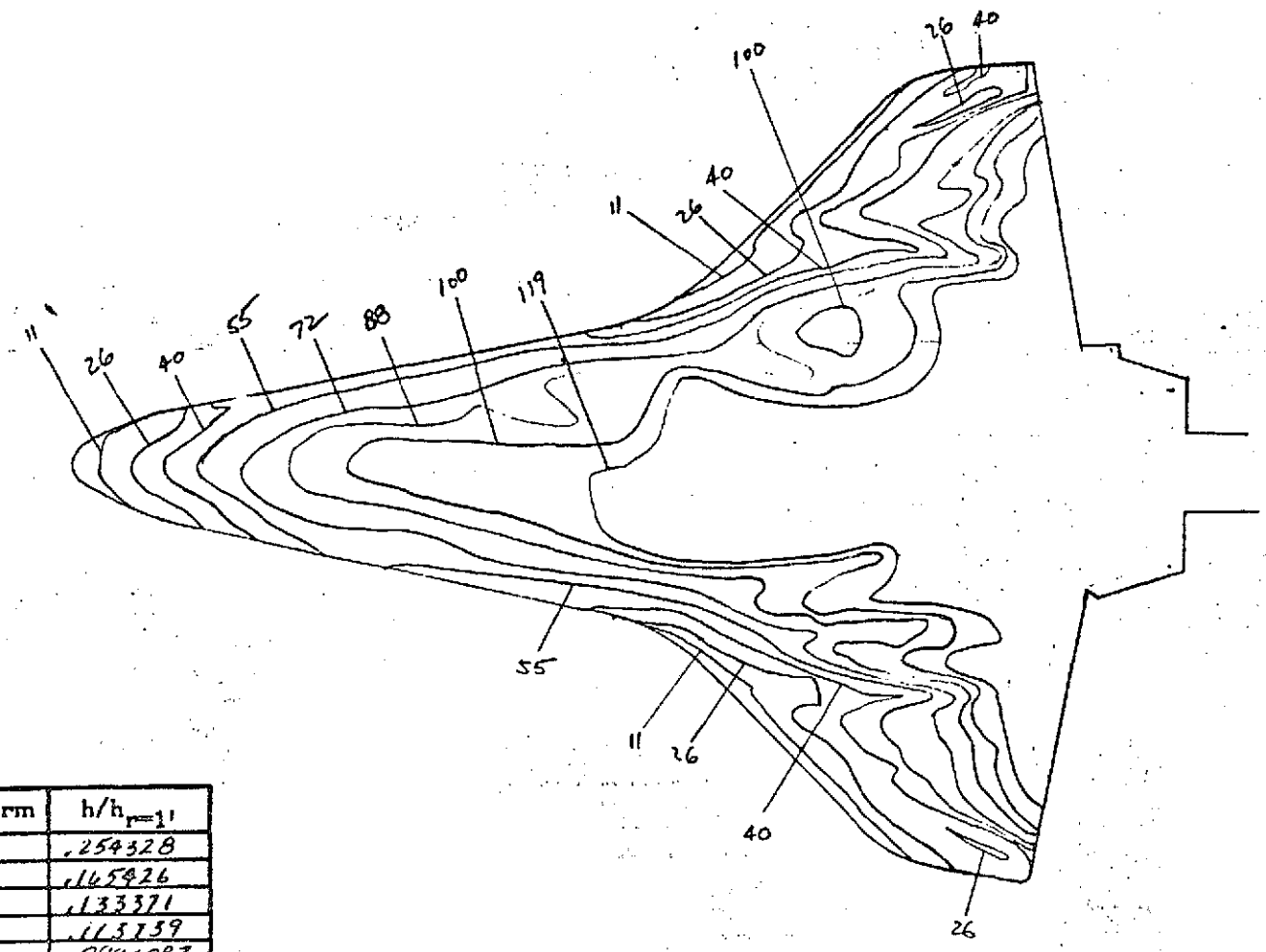

Isotherm	$h/h_{r=1'}$
11	.254328
26	.165426
40	.133371
55	.113739
72	.0994087
88	.0899186
100	.0843511
119	.077325

FIG. 55

CONFIG. 46-3

LENGTH (ft) = .638

SCALE .00593

FACILITY LRC/VDT

TEST OH42B RPA

RUN 4159

M_∞ = 8

P_{total} (psig) = 620

T_{total} (°F) = 920

T_{aw}/T_{total} = .91

R_N per foot = 3×10^6

$T_{phase\ change}$ (°F) = 300

α = 30°

β = 0

ϕ = 0

Camera Coordinates (from model center, x-axis parallel w/ stream, + downstream)

x (in) =

y (in) =

z (in) =

℄ at frame 11

H_S = .0726 BTU/FT²-SEC-°F

PHASE CHANGE TEST

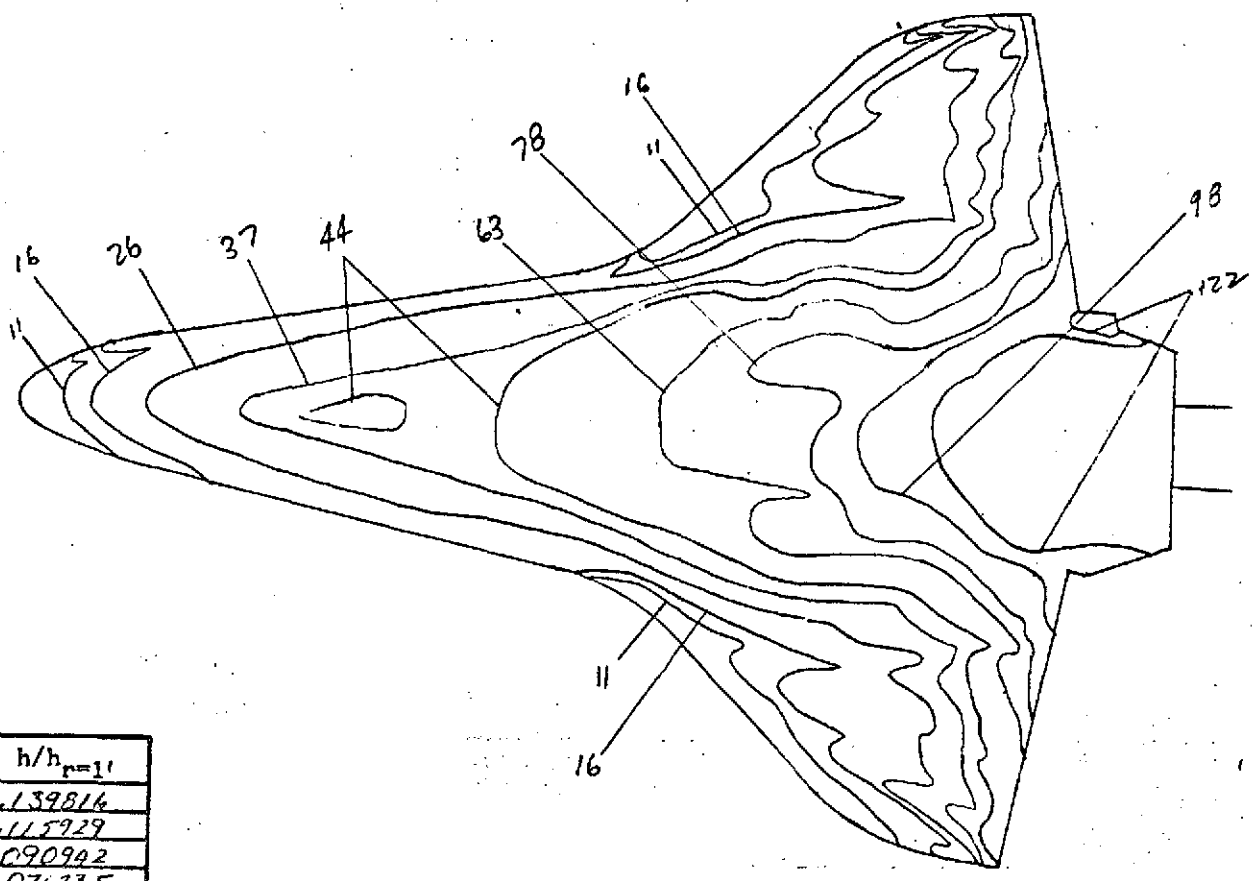

Isotherm	$h/h_{r=1'}$
11	.139814
16	.115929
26	.090942
37	.076235
44	.069708
63	.055423
78	.052506
98	.046843
122	.041983

FIG. 56

CONFIG. 46-1

LENGTH (ft) = .638

SCALE .00593

FACILITY LRC/VDT

TEST OH42B RPA

RUN 4160

M_∞ = 8

P_{total} (psig) = 160

T_{total} (°F) = 805

T_{aw}/T_{total} = .91

R_N per foot = 1×10^6

$T_{phase\ change}$ (°F) = 156

α = 30°

β = 0

ϕ = 0

Camera Coordinates (from model center, x-axis parallel w/ stream, + downstream)

x (in) =

y (in) =

z (in) =

$\dot{q}$ at frame 11

$\dot{H}S$ = .039504 BTU/FT²-SEC-°F

PHASE CHANGE TEST

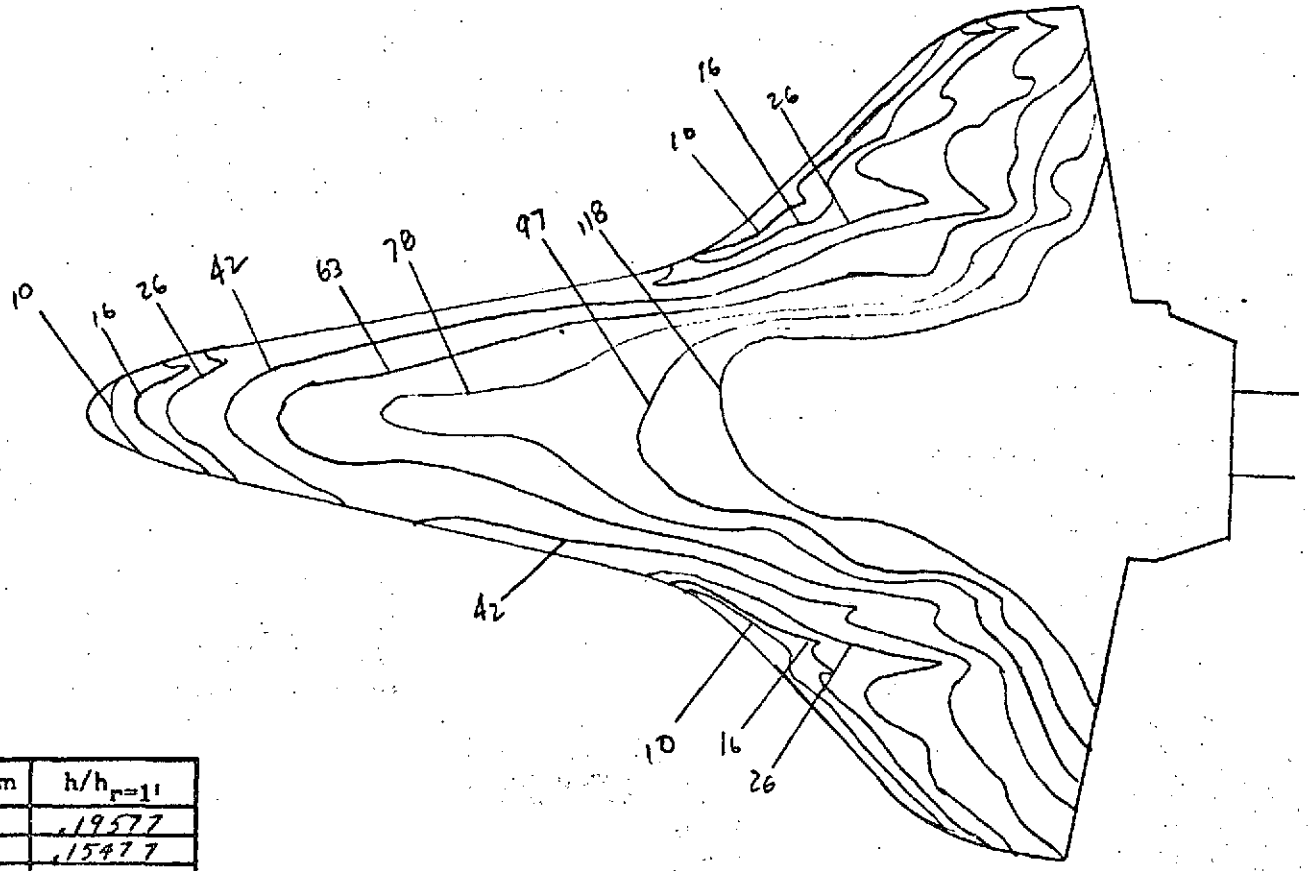

Isotherm	$h/h_{r=1'}$
10	.19577
16	.15477
26	.12141
42	.09553
63	.077997
78	.070098
97	.06286
118	.056991

FIG. 57

CONFIG. 46-3

LENGTH (ft) = .638

SCALE .00593

FACILITY LRC/VDT

TEST OH42B RPA

RUN 4161

M_∞ = 8

P_{total} (psig) = 163

T_{total} (°F.) = 800

T_{aw}/T_{total} = .91

R_N per foot = 1×10^6

$T_{phase\ change}$ (°F) = 175

α = 30°

β = 0

ϕ = 0

Camera Coordinates (from model center, x-axis parallel w/ stream, + downstream)

x (in) =

y (in) =

z (in) =

ϕ At [illegible] = 10

$HS = .0400474 \frac{BTU}{FT^2\text{-}SEC\text{-}°F}$

PHASE CHANGE TEST

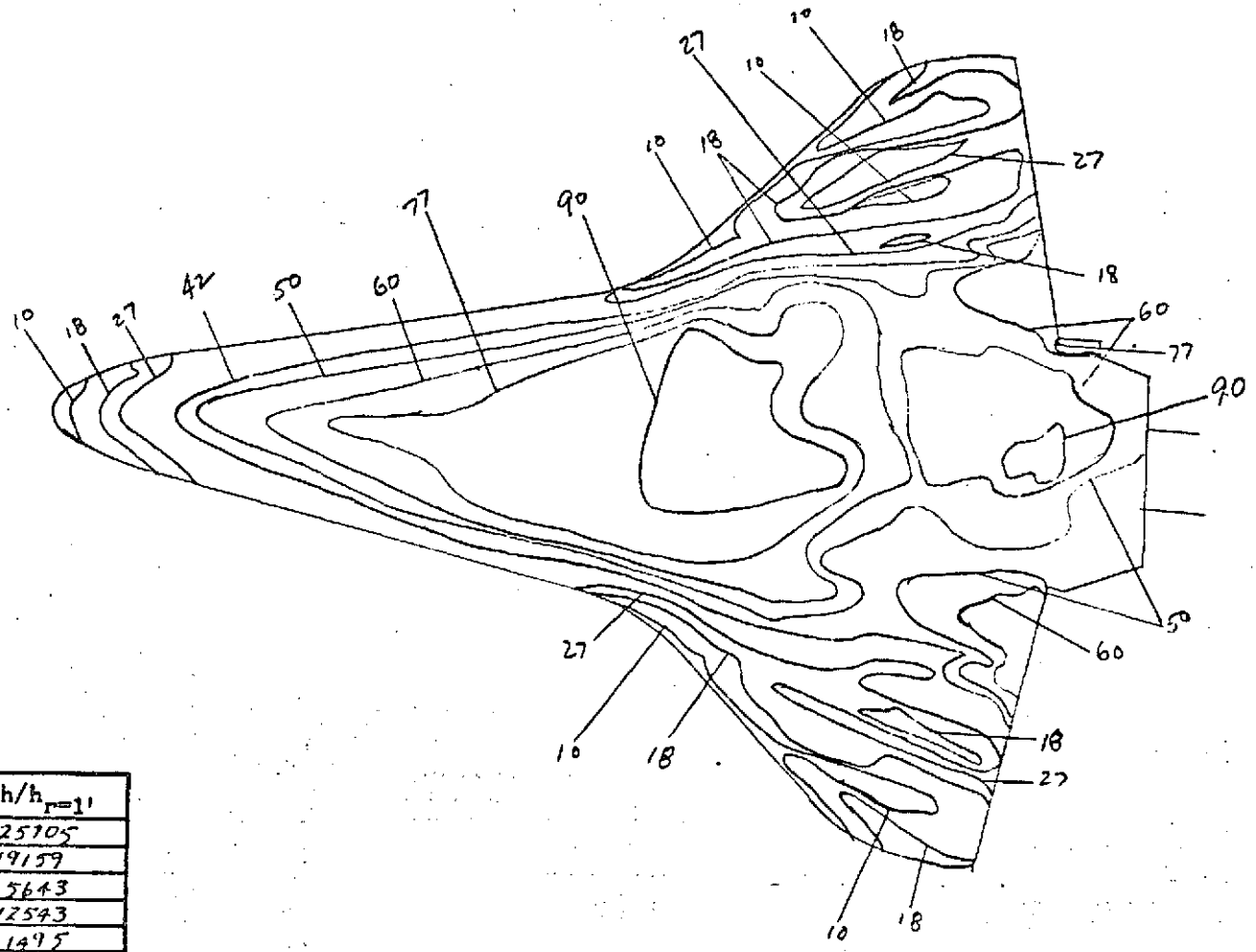

Isotherm	$h/h_{r=1'}$
10	.25705
18	.19159
27	.15643
42	.12543
50	.11495
60	.10494
77	.09263
90	.08568

FIG. 58

CONFIG. 46-1

LENGTH (ft) = .638

SCALE .00593

FACILITY LRC/VDT

TEST OH42B RPA

RUN 4162

M_∞ = 8

P_{total} (psig) = 1385

T_{total} (°F) = 915

T_{aw}/T_{total} = .91

R_N per foot = 6×10^6

$T_{phase\ change}$ (°F) = 350

α = 30°

β = 0

ϕ = 0

Camera Coordinates (from model center, x-axis parallel w/ stream, + downstream)

x (in) =

y (in) =

z (in) =

℄ AT FRAME 10

H_S = .104917 $\frac{BTU}{FT^2\text{-}SEC\text{-}°F}$

PHASE CHANGE TEST

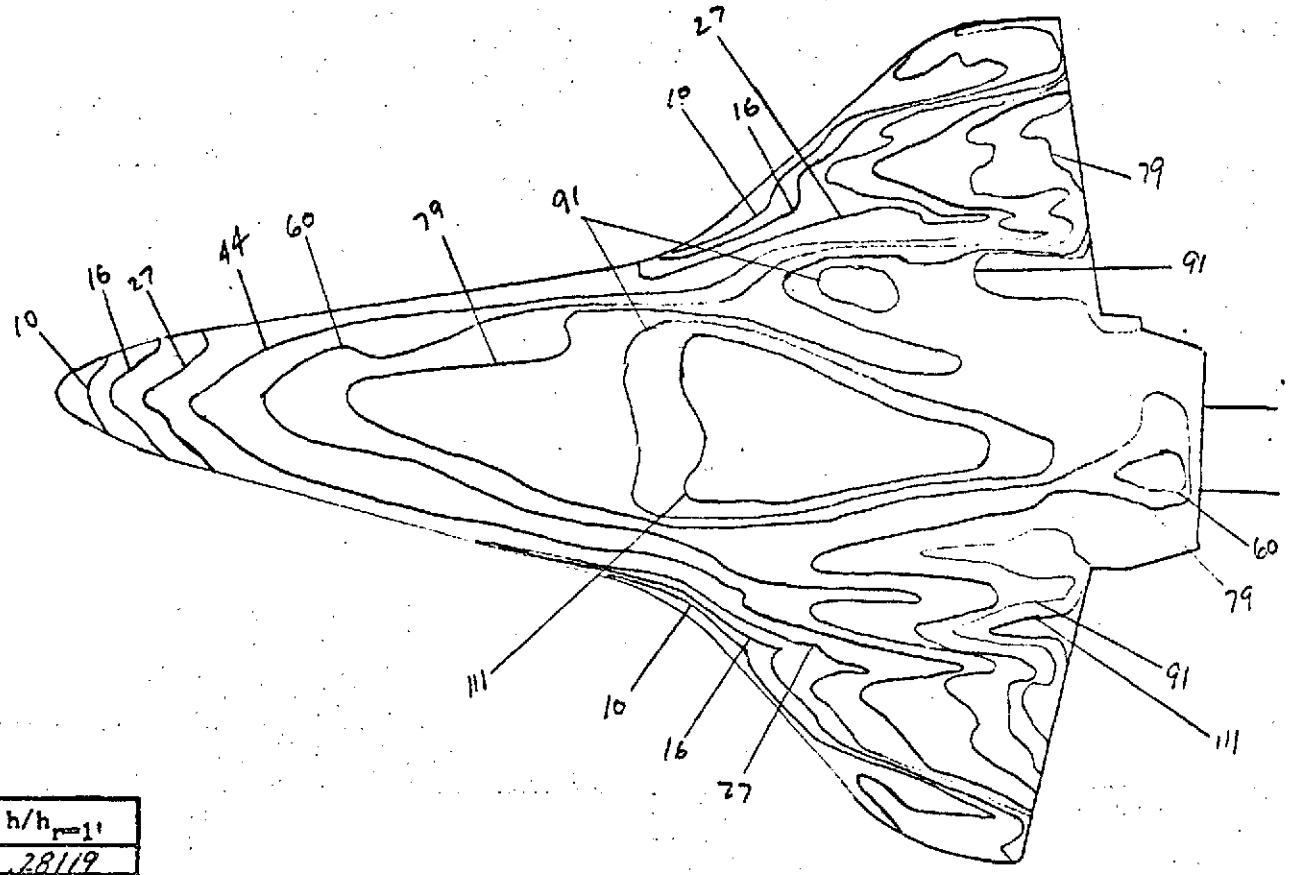

Isotherm	$h/h_{r=1}$
10	.28119
16	.2223
27	.1711
44	.1341
60	.1148
79	.1000
91	.0932
111	.0844

FIG. 59

CONFIG. 46-3

LENGTH (ft) = .638

SCALE .00593

FACILITY LRC/VDT

TEST OH42B RPA

RUN 4163

M_∞ = 8

P_{total} (psig) = 1385

T_{total} (°F) = 870

T_{aw}/T_{total} = .91

R_N per foot = 6×10^6

$T_{phase\ change}$ (°F) = 350

α = 30°

β = 0

ϕ = 0

Camera Coordinates (from model center, x-axis parallel w/ stream, + downstream)

x (in) =

y (in) =

z (in) =

℄ AT FRAME 10

HS = .10456 $\frac{BTU}{FT^2\text{-}SEC\text{-}°F}$

PHASE CHANGE TEST

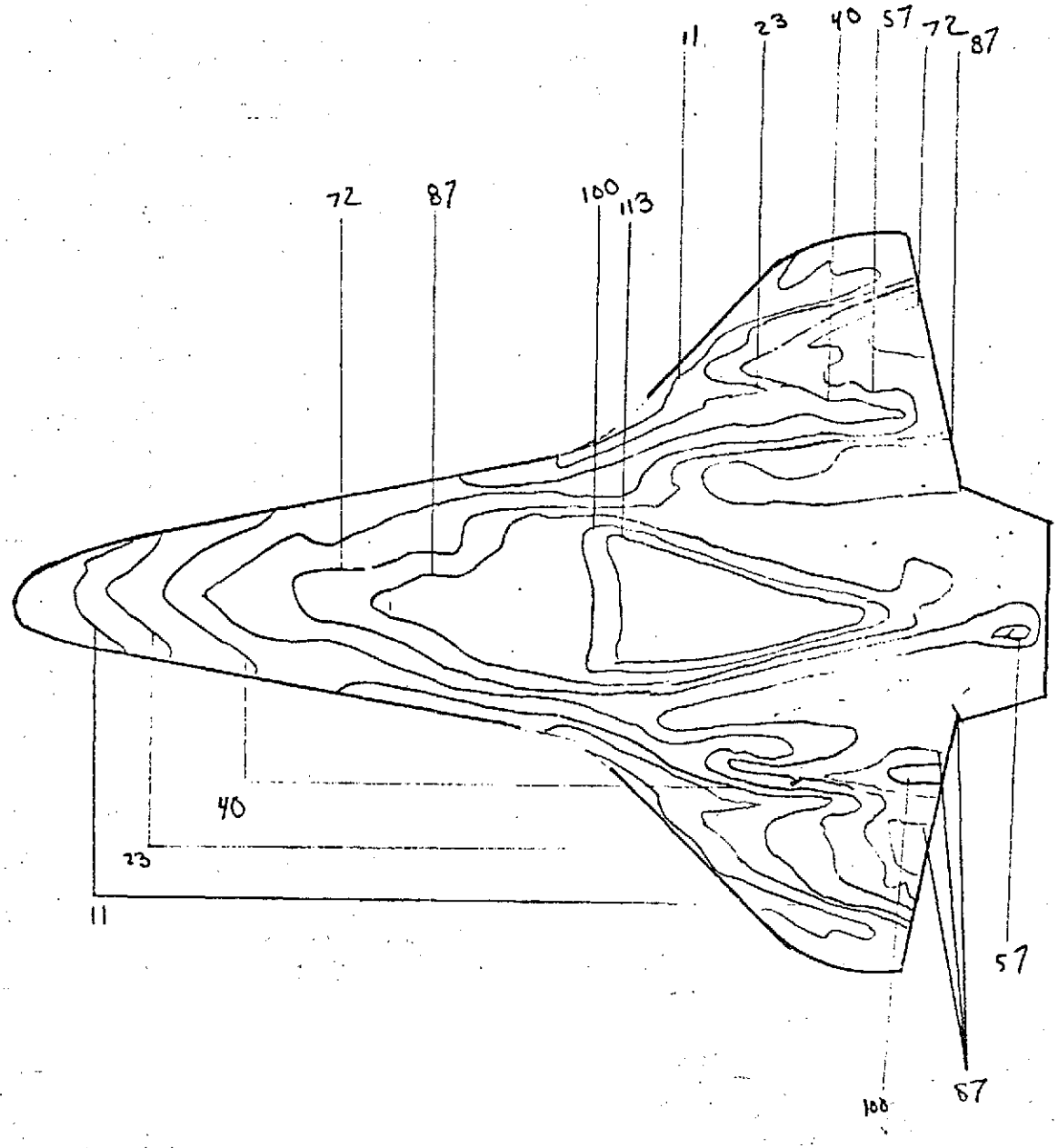

Isotherm	$h/h_{r=1'}$
11	.26810
23	.18541
40	.14059
57	.11718
72	.10479
87	.09533
100	.08792
113	.08365

FIG. 60

CONFIG. 46-3

LENGTH (ft) = .638

SCALE .00593

FACILITY LRC/VDT

TEST OH42B RPA

RUN 4163 M

M_∞ = 8

P_{total} (psig) = 1385

T_{total} (°F) = 870

T_{aw}/T_{total} = .91

R_N per foot = 6×10^6

$T_{phase\ change}$ (°F) = 350

α = 30°

β = 0

ϕ = 0

Camera Coordinates (from model center, x-axis parallel w/ stream, + downstream)

x (in) =

y (in) =

z (in) =

H_S = .10456 $\frac{BTU}{FT^2\text{-}SEC\text{-}°F}$

PHASE CHANGE TEST

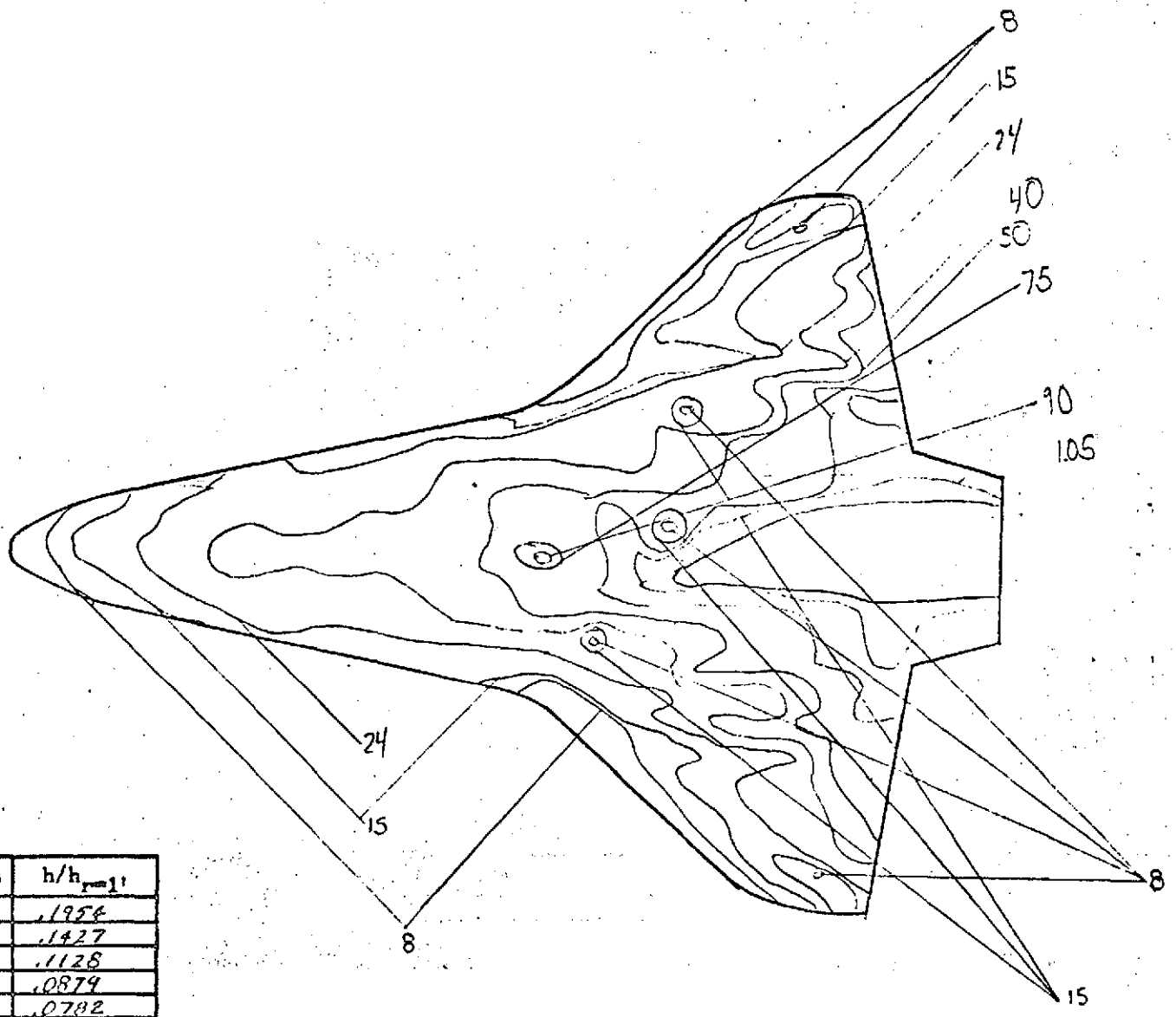

Isotherm	$h/h_{r=1'}$
8	.1954
15	.1427
24	.1128
40	.0879
50	.0782
75	.0638
90	.0583
105	.0539

FIG. 61

CONFIG. 46-3

LENGTH (ft) = .638

SCALE .00593

FACILITY LRC/VDT

TEST OH42B RPA

RUN 4164

M_∞ = 8

P_{total} (psig) = 635

T_{total} (°F) = 955

T_{aw}/T_{total} = .91

R_N per foot = 3×10^6

$T_{phase\ change}$ (°F) = 250

α = 30°

β = 0

ϕ = 0

Camera Coordinates (from model center, x-axis parallel w/ stream, + downstream)

x (in) =

y (in) =

z (in) =

HS = .073487 $\frac{BTU}{FT^2 SEC - °F}$

PHASE CHANGE TEST

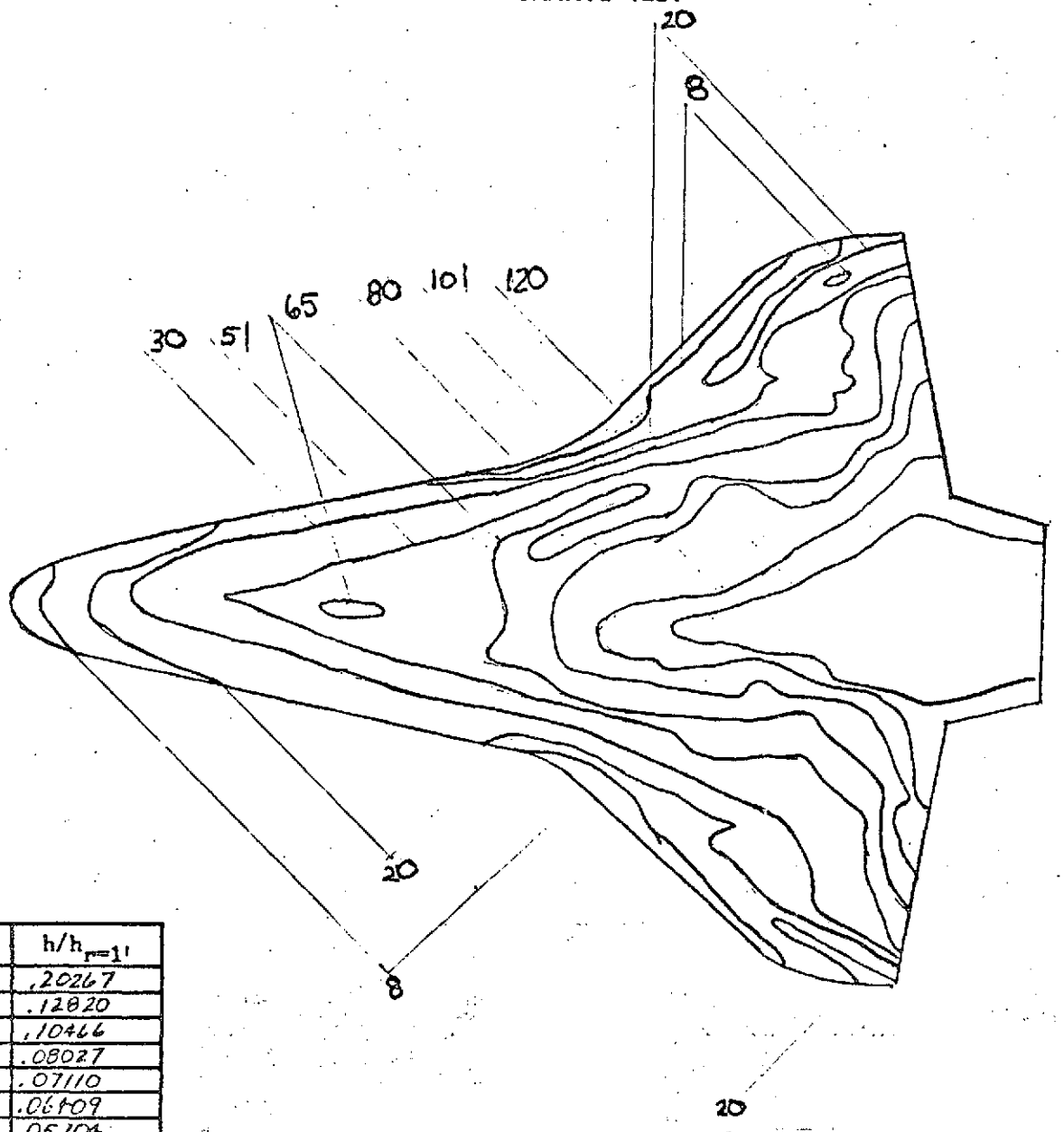

Isotherm	$h/h_{r=1'}$
8	.20267
20	.12820
30	.10466
51	.08027
65	.07110
80	.06409
101	.05104
120	.05233

FIG. 62

CONFIG. 46-1

LENGTH (ft) = .638

SCALE .00593

FACILITY LRC/VDT

TEST OH42B RPA

RUN 4165

M_∞ = 8

P_{total} (psig) = 640

T_{total} (°F) = 930

T_{aw}/T_{total} = .91

R_N per foot = $3X10^6$

$T_{phase\ change}$ (°F) = 250

α = 30

β = 0

ϕ = 0

Camera Coordinates (from model center, x-axis parallel w/ stream, + downstream)

x (in) =

y (in) =

z (in) =

HS = .01362 BTU/FT² SEC-°F

PHASE CHANGE TEST

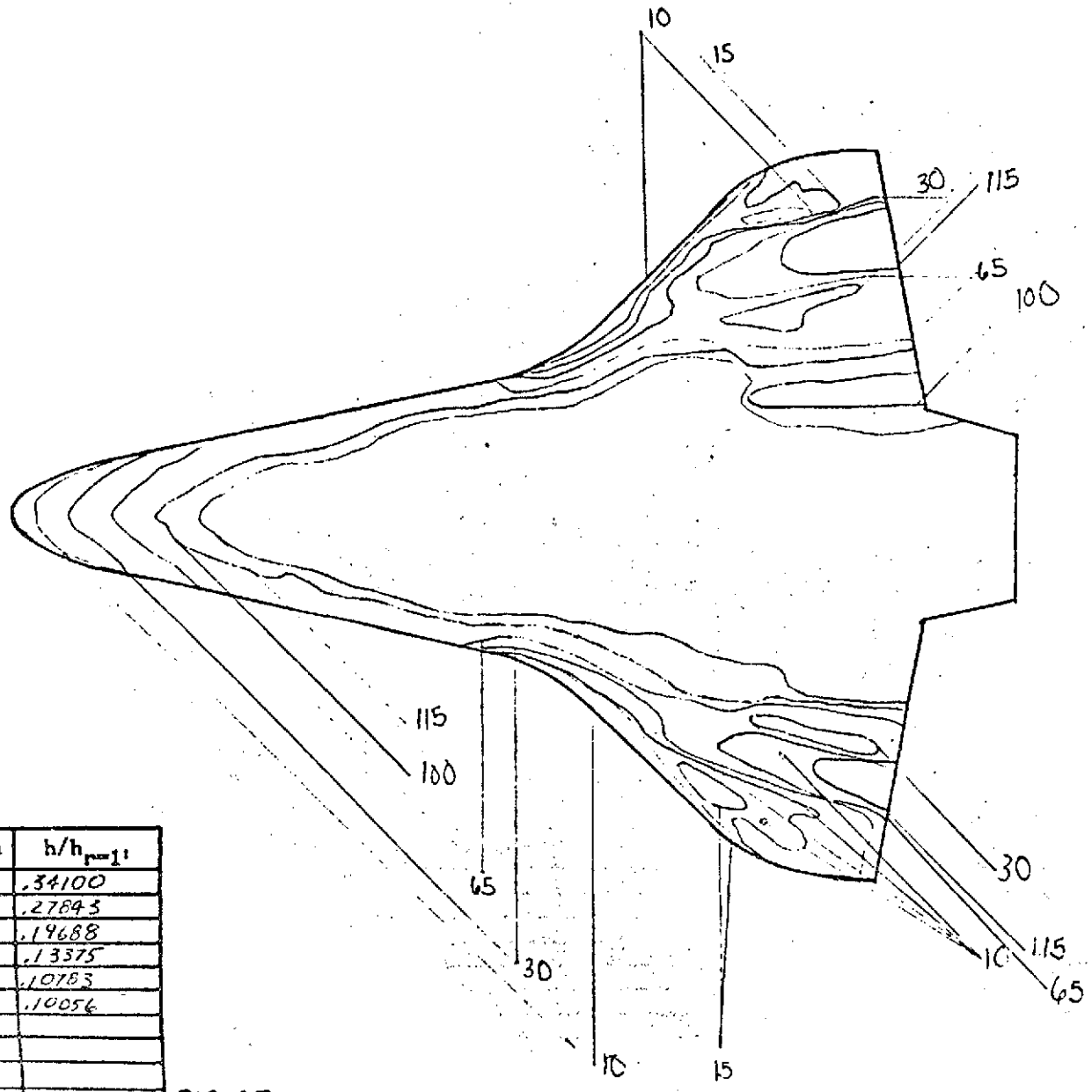

Isotherm	$h/h_{r=1'}$
10	.34100
15	.27845
30	.19688
65	.13375
100	.10783
115	.10056

FIG. 63

CONFIG. 46-3

LENGTH (ft) = .638

SCALE .00593

FACILITY LRC/VDT

TEST OH42B RPA

RUN 4166

M_∞ = 8

P_{total} (psig) = 1390

T_{total} (°F) = 920

T_{aw}/T_{total} = .91

R_N per foot = 6×10^6

$T_{phase\ change}$ (°F) = 400

α = 30°

β = 0

ϕ = 0

Camera Coordinates (from model center, x-axis parallel w/ stream, + downstream)

x (in) =

y (in) =

z (in) =

$HS = .11265 \frac{BTU}{FT^2\text{-}SEC\cdot{}^\circ F}$

PHASE CHANGE TEST

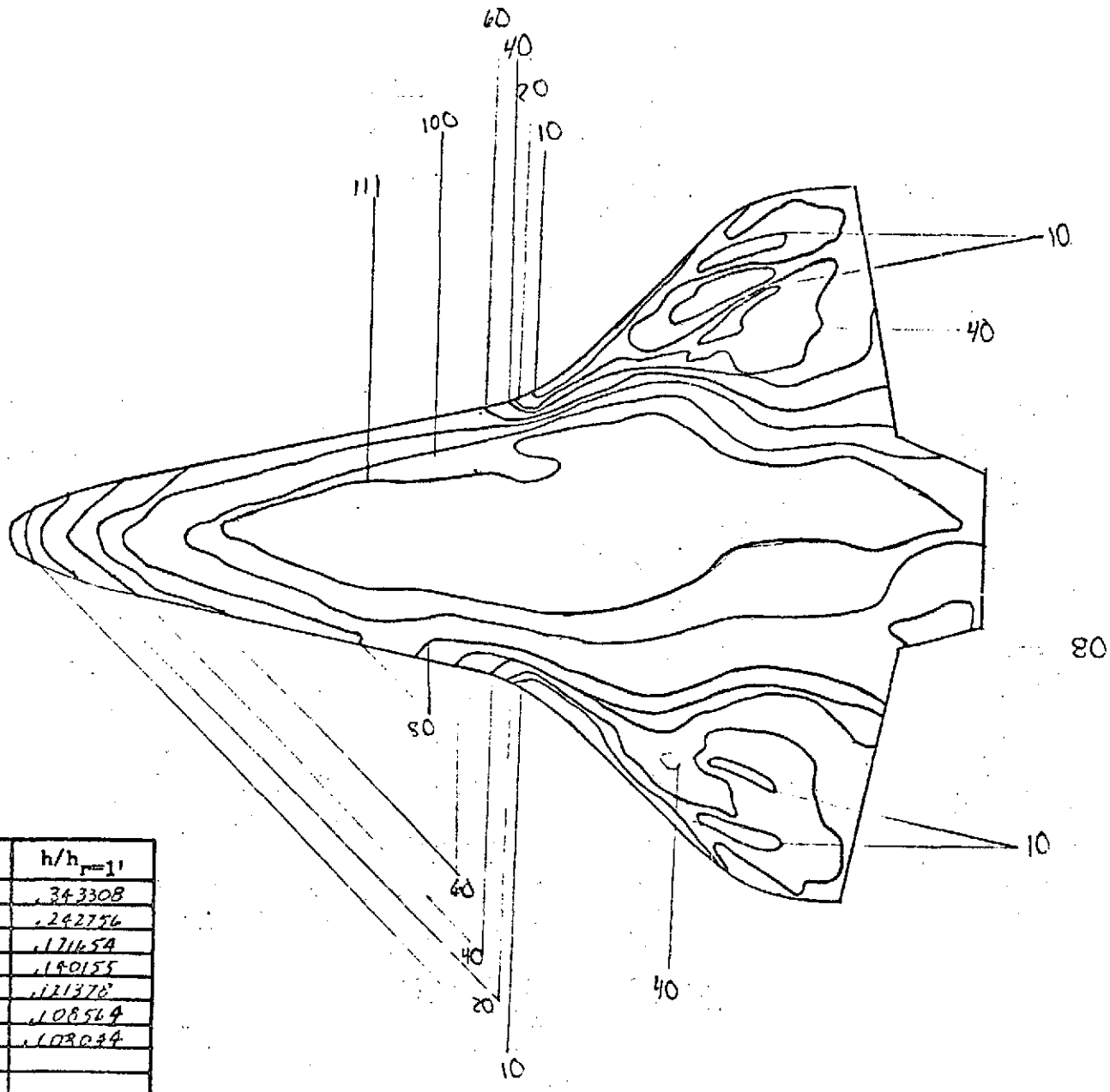

Isotherm	$h/h_{r=1'}$
10	.343308
20	.242756
40	.171654
60	.140155
80	.121378
100	.108564
111	.103034

FIG. 64

CONFIG. 46-1

LENGTH (ft) = .638

SCALE .00593

FACILITY LRC/VDT

TEST OH42B RPA

RUN 4167

M_∞ = 8

P_{total} (psig) = 1625

T_{total} (°F) = 885

T_{aw}/T_{total} = .91

R_N per foot = 7×10^6

$T_{phase\ change}$ (°F) = 400

α = 30

β = 0

ϕ = 0

Camera Coordinates (from model center, x-axis parallel w/ stream, + downstream)

x (in) =

y (in) =

z (in) =

HS = .11265 $\frac{BTU}{FT^2\text{-}SEC\text{-}^\circ F}$

PHASE CHANGE TEST

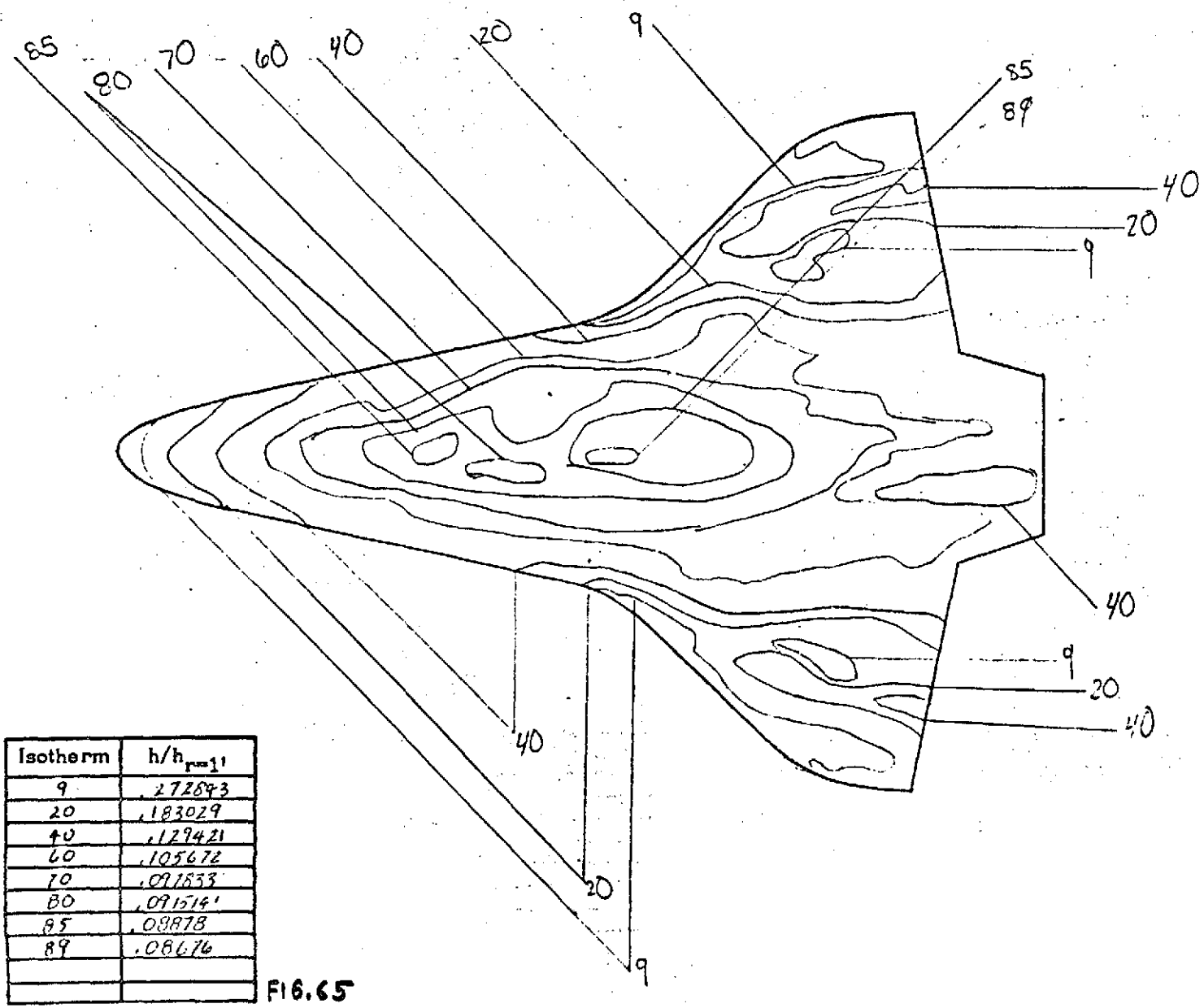

Isotherm	$h/h_{r=1'}$
9	.272893
20	.183029
40	.129421
60	.105672
70	.091833
80	.091514
85	.08878
89	.08676

FIG. 65

CONFIG. 46-3

LENGTH (ft) = .638

SCALE .00593

FACILITY LRC/VDT

TEST OH42B RPA

RUN 4168

$M_\infty = 8$

P_{total} (psig) = 1930

T_{total} (°F) = 985

T_{aw}/T_{total} = .91

R_N per foot = 8

$T_{phase\ change}$ (°F) =

α =

β =

ϕ =

Camera Coordinates (from model center, x-axis parallel w/ stream, + downstream)

x (in) =

y (in) =

z (in) =

$HS = .122902 \frac{BTU}{FT^2\text{-}SEC\text{-}°F}$

PHASE CHANGE TEST

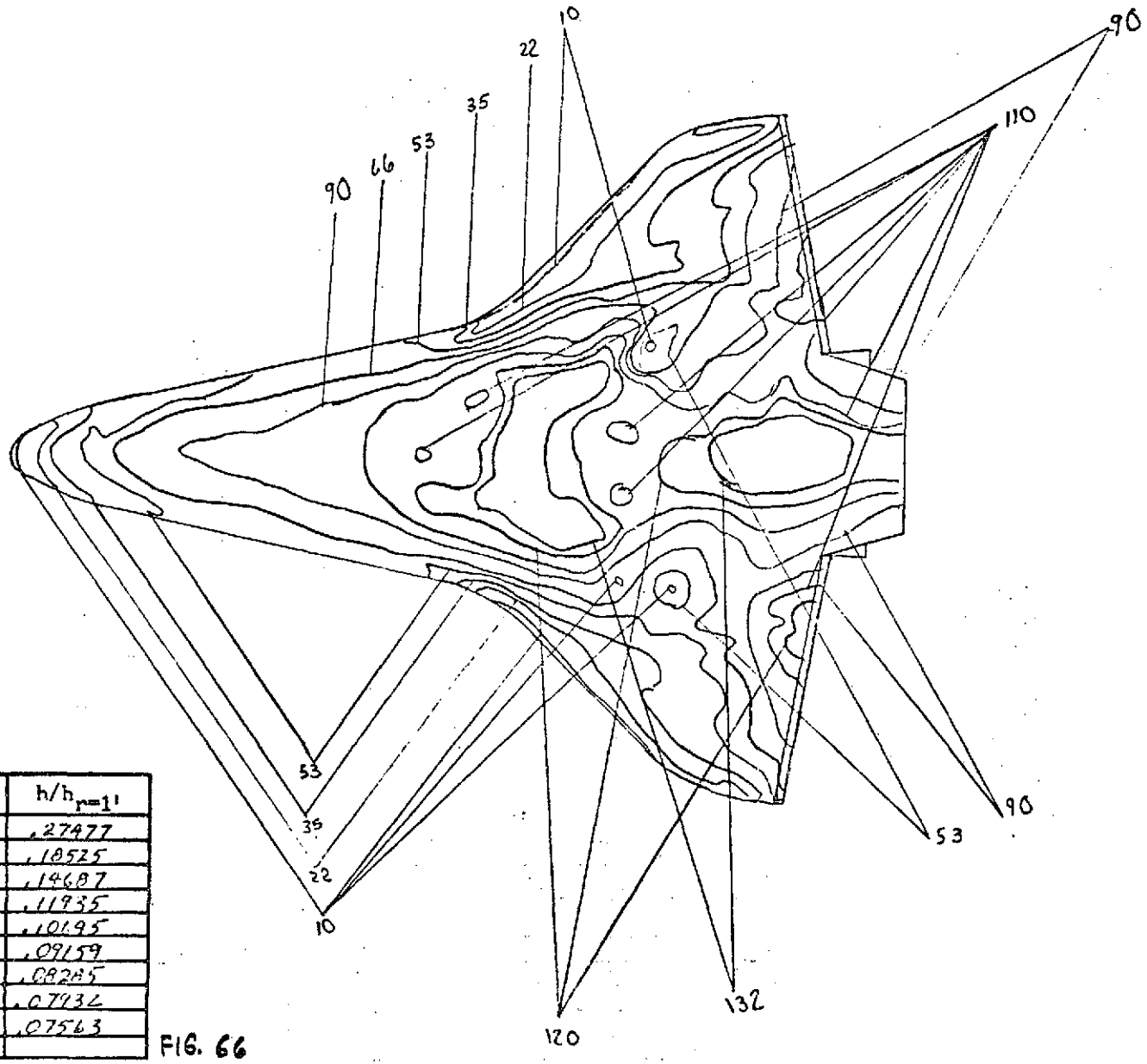

Isotherm	$h/h_{r=1'}$
10	.27477
22	.18525
35	.14687
53	.11935
66	.10195
90	.09159
110	.08285
120	.07934
150	.07563

FIG. 66

CONFIG. 46-1

LENGTH (ft) = .638

SCALE .00593

FACILITY LRC/VDT

TEST OH42B RPA

RUN 4172

M_∞ = 8

P_{total} (psig) = 650

T_{total} (°F) = 886

T_{aw}/T_{total} = .92

R_N per foot = 3×10^3

$T_{phase\ change}$ (°F) = 300

α = 35

β = 0

ϕ = 0

Camera Coordinates (from model center, x-axis parallel w/ stream, + downstream)

x (in) =

y (in) =

z (in) =

HIT Q ON FRAME 10

HS = .073986 BTU/FT²-SEC-OF

MDS

PHASE CHANGE TEST

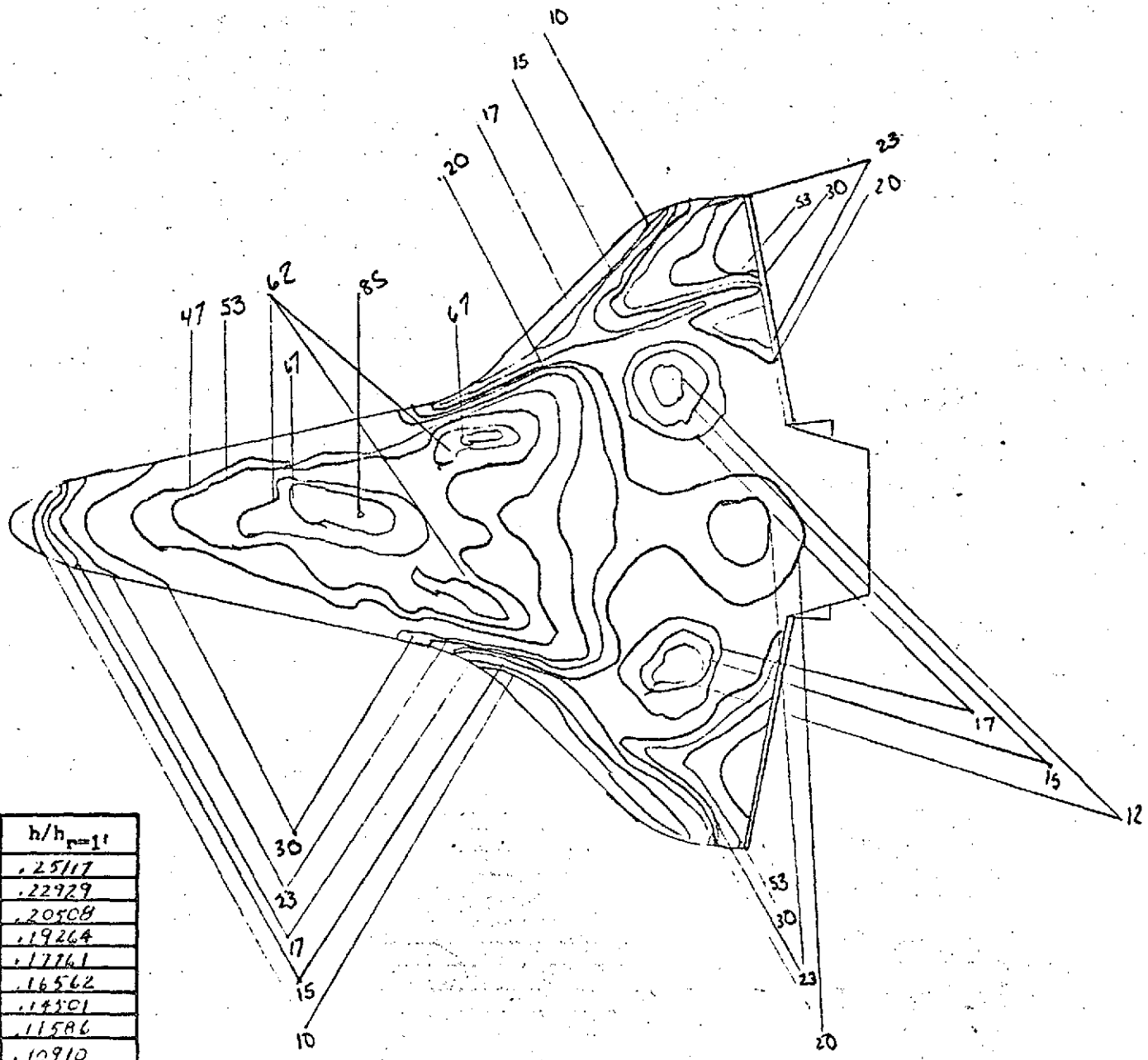

Isotherm	$h/h_{r=1'}$
10	.25117
12	.22929
15	.20508
17	.19264
20	.17761
23	.16562
30	.14501
47	.11586
53	.10910
62	.10087
67	.09704
85	.08615

FIG. 67

CONFIG. 46-2

LENGTH (ft) = .638

SCALE .00593

FACILITY LRC/VDT

TEST OH42B (RPA)

RUN 4173

M_∞ = 8

P_{total} (psig) = 1390

T_{total} (°F.) = 915

T_{aw}/T_{total} = .92

R_N per foot = 6×10^6

$T_{phase\ change}$ (°F) = 350

α = 35

β = 0

ϕ = 0

Camera Coordinates (from model center, x-axis parallel w/ stream, + downstream)

x (in) =

y (in) =

z (in) =

Hit 9 on Frame 9

HS = .10509 BTU

HVD-EVCS

PHASE CHANGE TEST

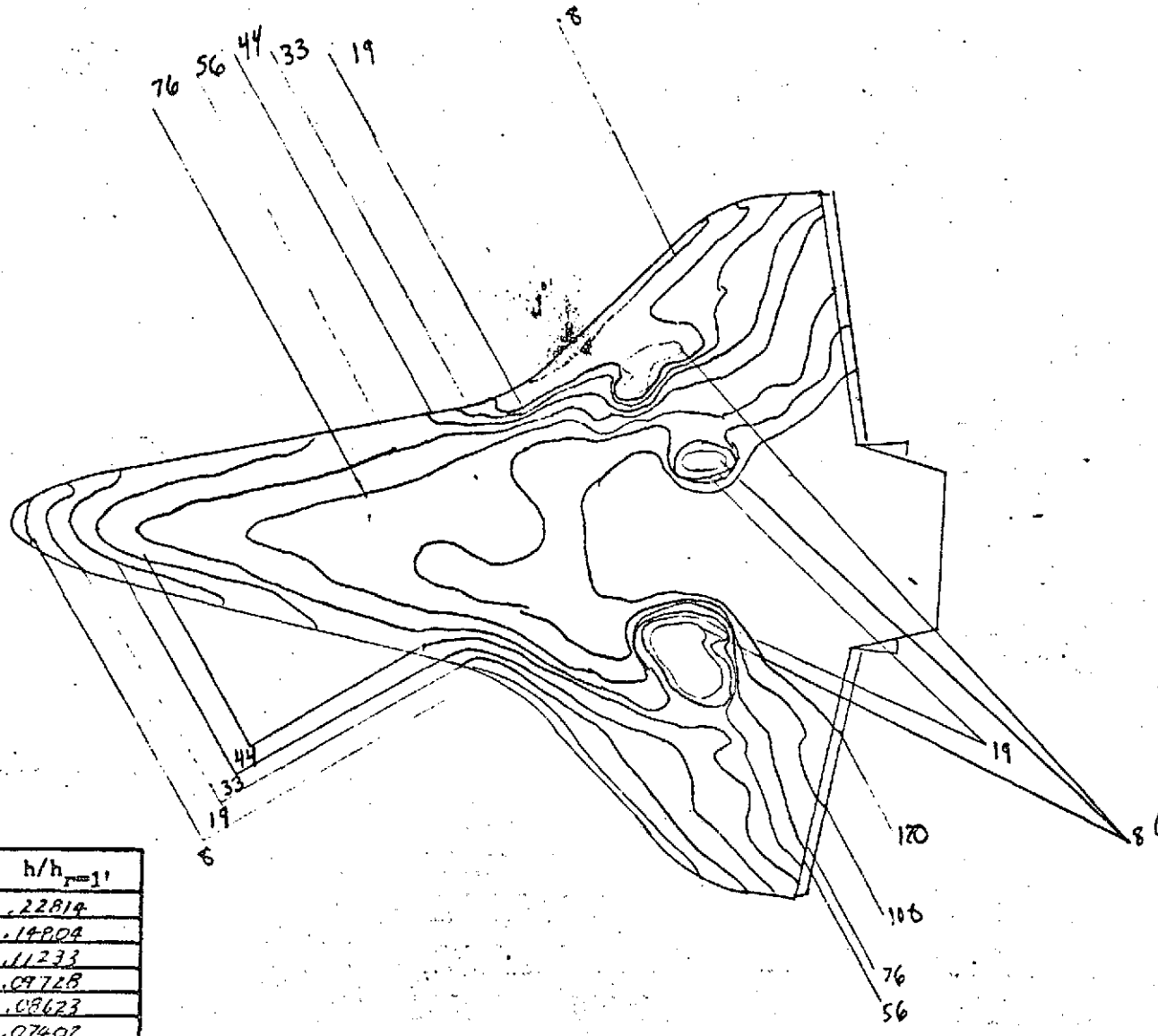

Isotherm	$h/h_{r=1'}$
8	.22814
19	.14804
33	.11233
44	.09728
56	.08623
76	.07402
100	.06452
120	.05871

HS = .03926 $\frac{BTU}{FT^2 SEC °F}$

FIG. 68

CONFIG. 46-1

LENGTH (ft) = .638

SCALE .00593

FACILITY LRC/PDT

TEST OH42B (RPA)

RUN 4/174

M_∞ = 8

P_{total} (psig) = 158

T_{total} (°F) = 780

T_{aw}/T_{total} = .92

R_N per foot = 1×10^6

$T_{phase\ change}$ (°F) = 175

α = 35

β = 0

ϕ = 0

Camera Coordinates (from model center, x-axis parallel w/ stream, + downstream)

x (in) =

y (in) =

z (in) =

Film Roll and Frame 8

MDS

PHASE CHANGE TEST

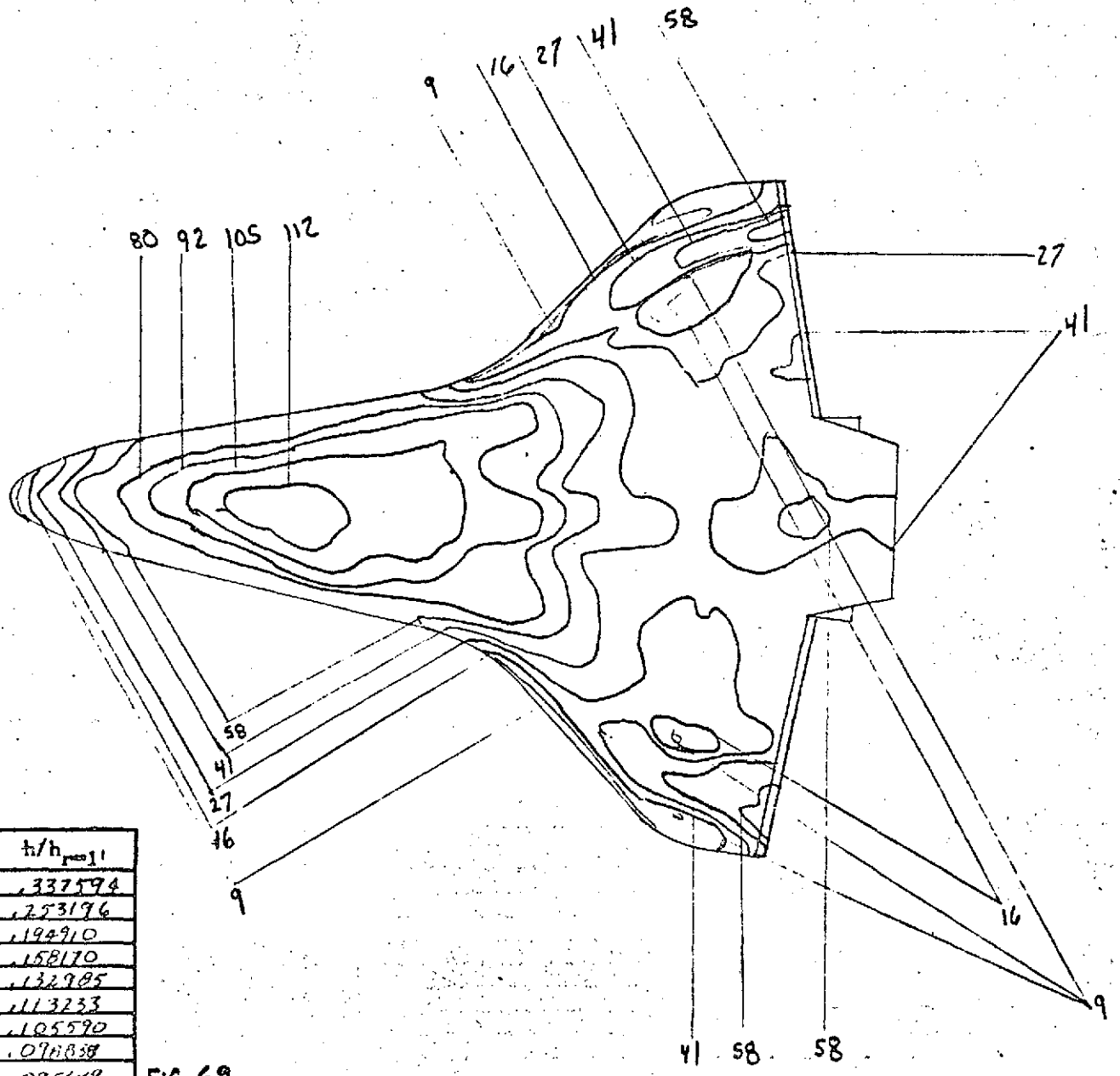

Isotherm	h/h_{ref}
9	.337594
16	.253196
27	.194910
41	.158170
58	.132985
80	.113233
92	.105590
105	.098838
112	.095649

FIG. 69

$h_{ref} = .10518 \frac{BTU}{FT^2\text{-}SEC\text{-}^\circ F}$

CONFIG. 46-1

LENGTH (ft) = .638

SCALE .00593

FACILITY LRC/NDT

TEST OH42B (RPA)

RUN 4175

M_∞ = 8

P_{total} (psig) = 1390

T_{total} (°F) = 935

T_{aw}/T_{total} = .92

R_N per foot = 6×10^6

$T_{phase\ change}$ (°F) = 400

α = 35

β = 0

ϕ = 0

Camera Coordinates (from model center, x-axis parallel w/ stream, + downstream)

x (in) =

y (in) =

z (in) =

Hit ℄ on Frame 9

MPS

PHASE CHANGE TEST

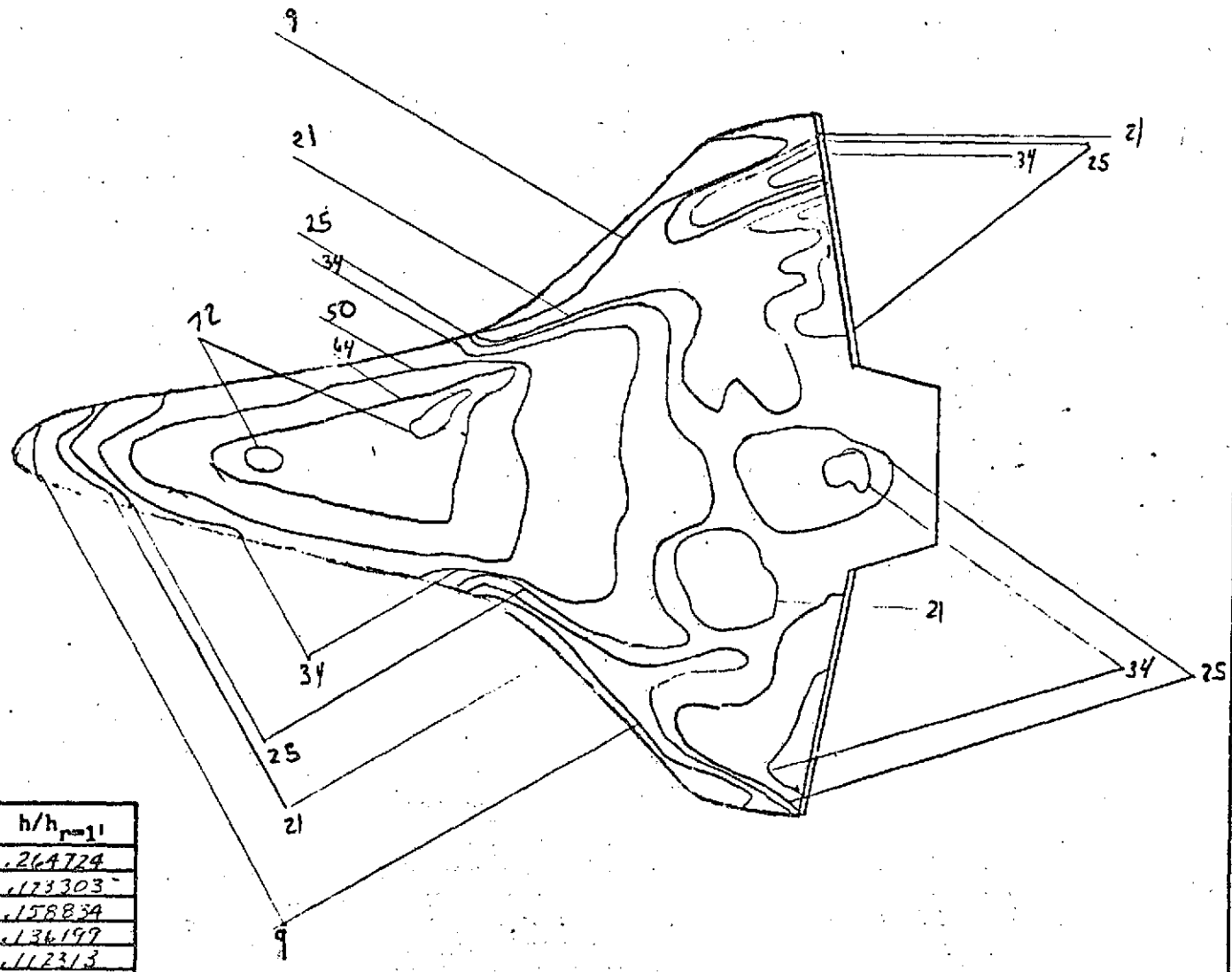

Isotherm	$h/h_{r=1}$
9	.264724
21	.173303
25	.158834
34	.136197
50	.112313
64	.089272
72	.093594

FIG. 70

$HS = .1047 \frac{BTU}{FT^2\text{-}SEC\text{-}^\circ F}$

CONFIG. 46-1

LENGTH (ft) = .638

SCALE .00593

FACILITY LRC/VDT

TEST OH42B (RPA)

RUN 4176

M_∞ = 8

P_{total} (psig) = 1380

T_{total} (°F) = 915

T_{aw}/T_{total} = .92

R_N per foot = 6×10^6

$T_{phase\ change}$ (°F) = 350

α = 35°

β = 0

ϕ = 0

Camera Coordinates (from model center, x-axis parallel w/ stream, + downstream)

x (in) =

y (in) =

z (in) =

HIT ℄ on Frame 9

NDS

PHASE CHANGE TEST

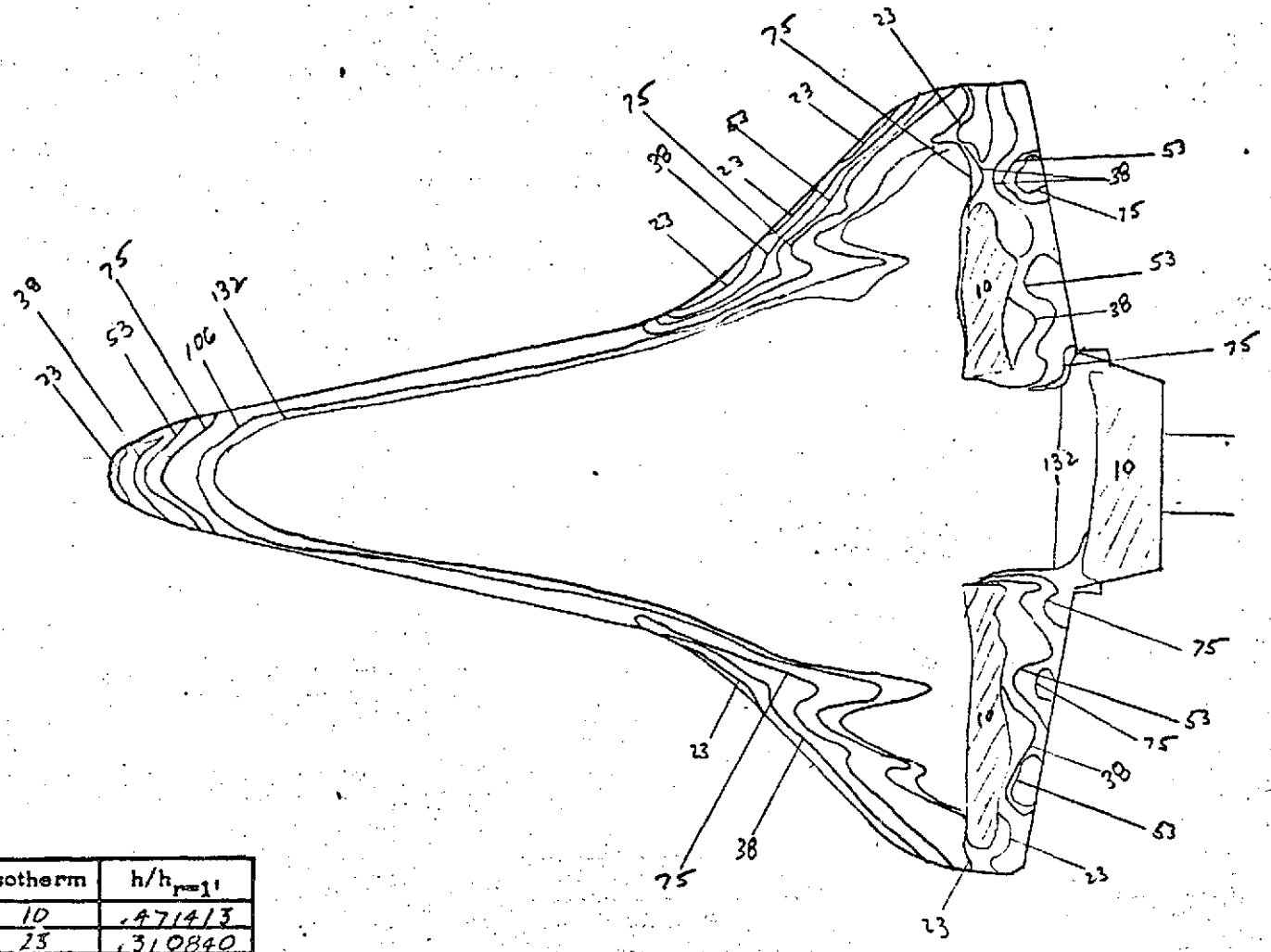

Isotherm	$h/h_{r=1'}$
10	.471413
23	.310840
38	.241830
53	.204769
75	.172156
106	.144743
132	.127152

$HS = .072743 \frac{BTU}{FT^2 SEC \cdot °F}$

FIG. 71

CONFIG. 46-4EBF

LENGTH (ft) = .635

SCALE .00593

FACILITY LRC/VDT

TEST OH42B (RPA)

RUN 4177

$M_\infty = 8$

P_{total} (psig) = 625

T_{total} (°F) = 940

$T_{aw}/T_{total} = .91$

R_N per foot = 3×10^6

$T_{phase\ change}$ (°F) = 400

$\alpha = 30°$

$\beta = 0$

$\phi = 0$

Camera Coordinates (from model center, x-axis parallel w/ stream, + downstream)

x (in) =

y (in) =

z (in) =

℄ at Frame 9

NVD-EVCS

PHASE CHANGE TEST

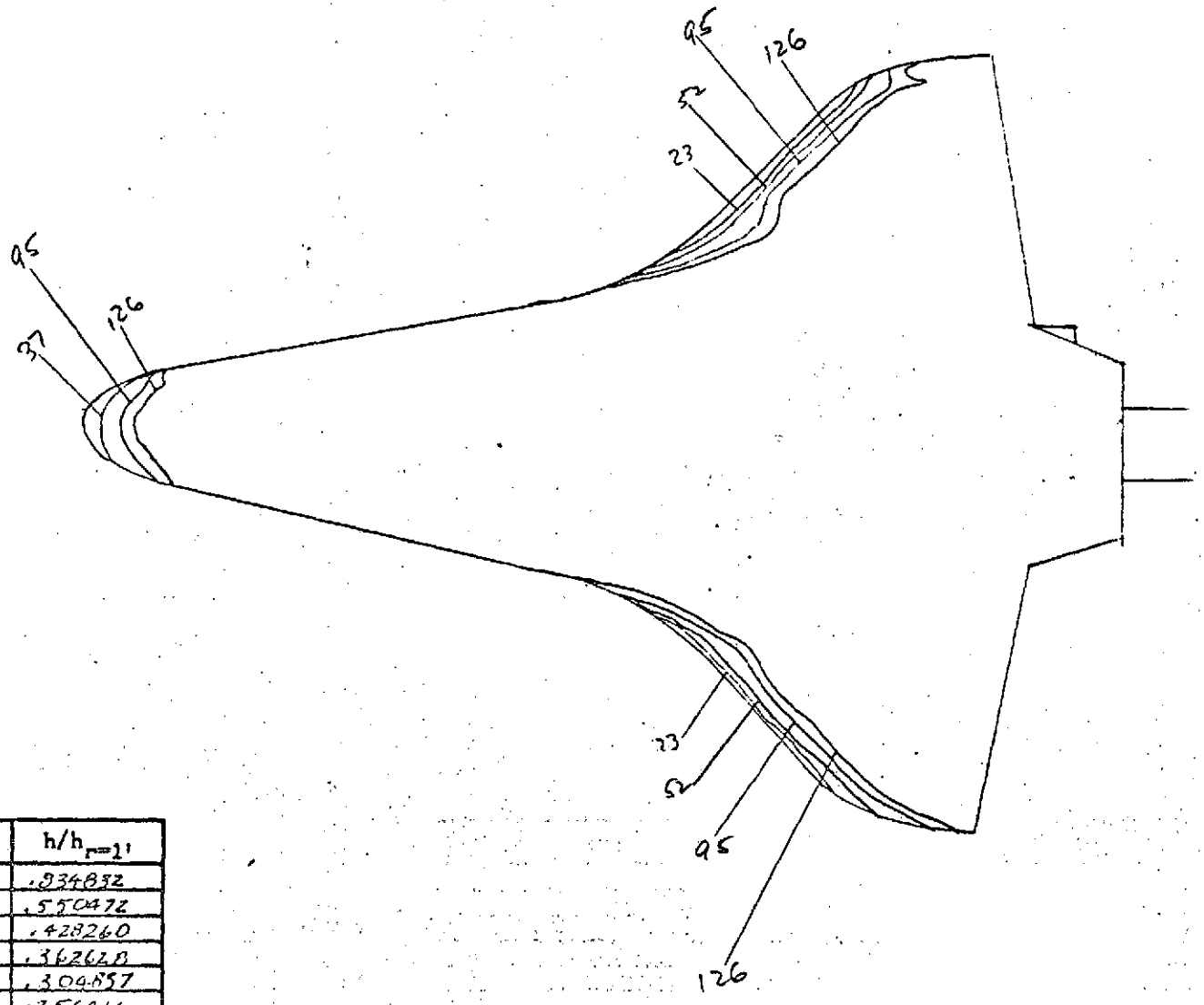

Isotherm	$h/h_{r=1}$
10	.934832
23	.550472
38	.428260
53	.362620
75	.309857
106	.256416
132	.229780

$HS = .0732651 \frac{BTU}{FT^2\text{-}SEC\text{-}^\circ F}$

FIG. 72

CONFIG. 46-2

LENGTH (ft) = .638

SCALE .00593

FACILITY LRC/VDT

TEST OH42B (RPA)

RUN 4178

$M_\infty = 8$

P_{total} (psig) = 635

T_{total} (°F.) = 925

T_{aw}/T_{total} =

R_N per foot = 3×10^6

$T_{phase\ change}$ (°F) = 500

α = 30°

β = 0

ϕ = 0

Camera Coordinates (from model center, x-axis parallel w/ stream, + downstream)

x (in) =

y (in) =

z (in) =

PHASE CHANGE TEST

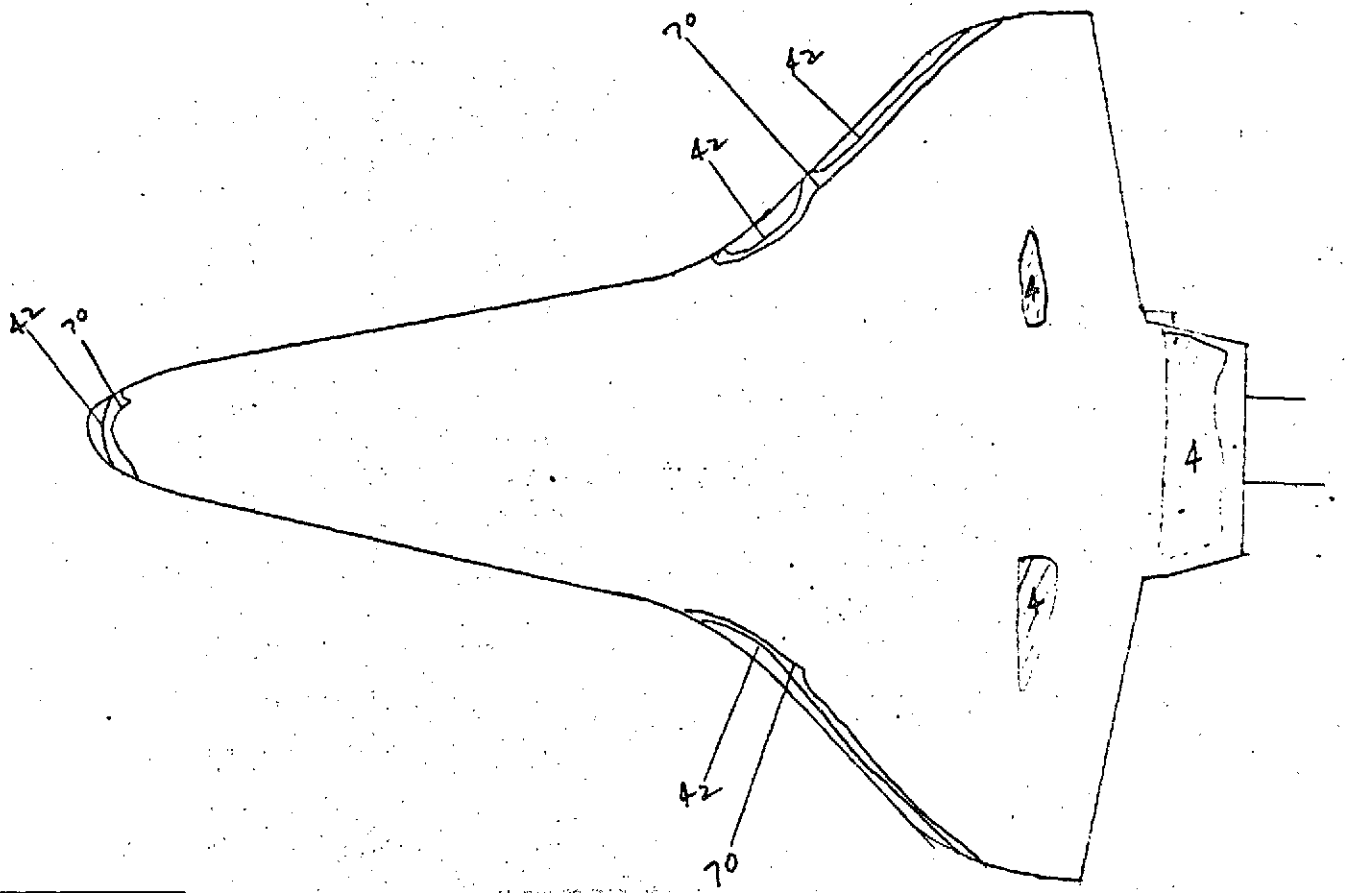

Isotherm	$h/h_{r=1'}$
4	1.30154
42	.40166
70	.31113

FIG. 73

CONFIG. 46-4AEBF

LENGTH (ft) = .638

SCALE .00593

FACILITY LRC/VDT

TEST OH42B (RPA)

RUN 4179

$M_\infty = 8$

P_{total} (psig) = 164

T_{total} (°F) = 820

T_{aw}/T_{total} =

R_N per foot = 1×10^6

$T_{phase\ change}$ (°F) = 350

$\alpha = 30°$

$\beta = 0$

$\phi = 0$

Camera Coordinates (from model center, x-axis parallel w/ stream, + downstream)

x (in) =

y (in) =

z (in) =

℄ AT FRAME 9

PHASE CHANGE TEST

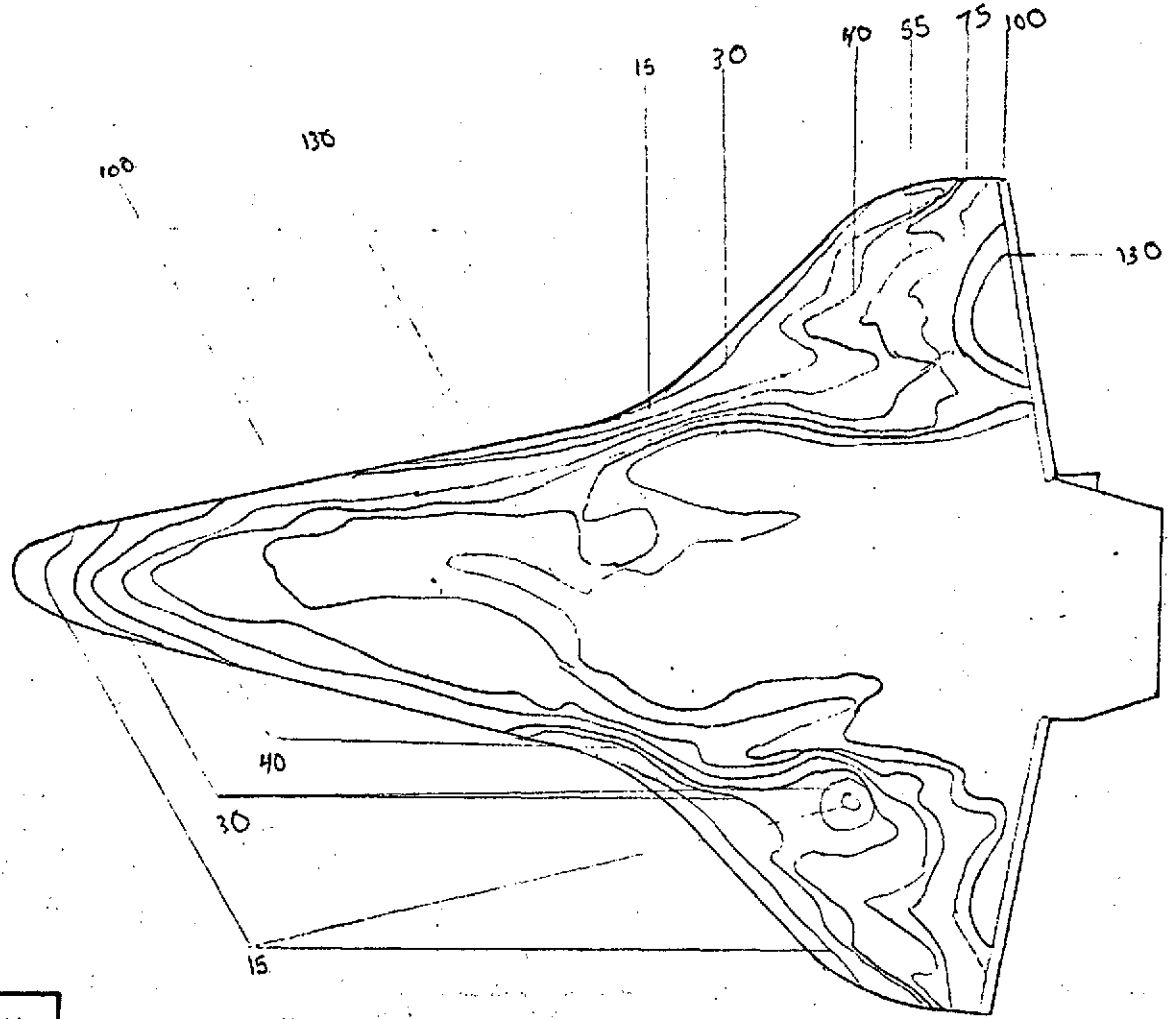

Isotherm	$h/h_{r=1}$
15	.225801
30	.159665
40	.138274
55	.117921
75	.100981
100	.087452
130	.076701

FIG. 74

H_S = .0728 $\frac{BTU}{FT^2\text{-}SEC\text{-}^\circ F}$

CONFIG. 46-2

LENGTH (ft) = .638

SCALE .00593

FACILITY LRC/VDT

TEST OH42B (RPA)

RUN 4180

M_∞ = 8

P_{total} (psig) = 625

T_{total} (°F) = 910

T_{aw}/T_{total} = .91

R_N per foot = 3×10^6

$T_{phase\ change}$ (°F) = 300

α = 30°

β = 0

ϕ = 0

Camera Coordinates (from model center, x-axis parallel w/ stream, + downstream)

x (in) =

y (in) =

z (in) =

HVD-EVCS

PHASE CHANGE TEST

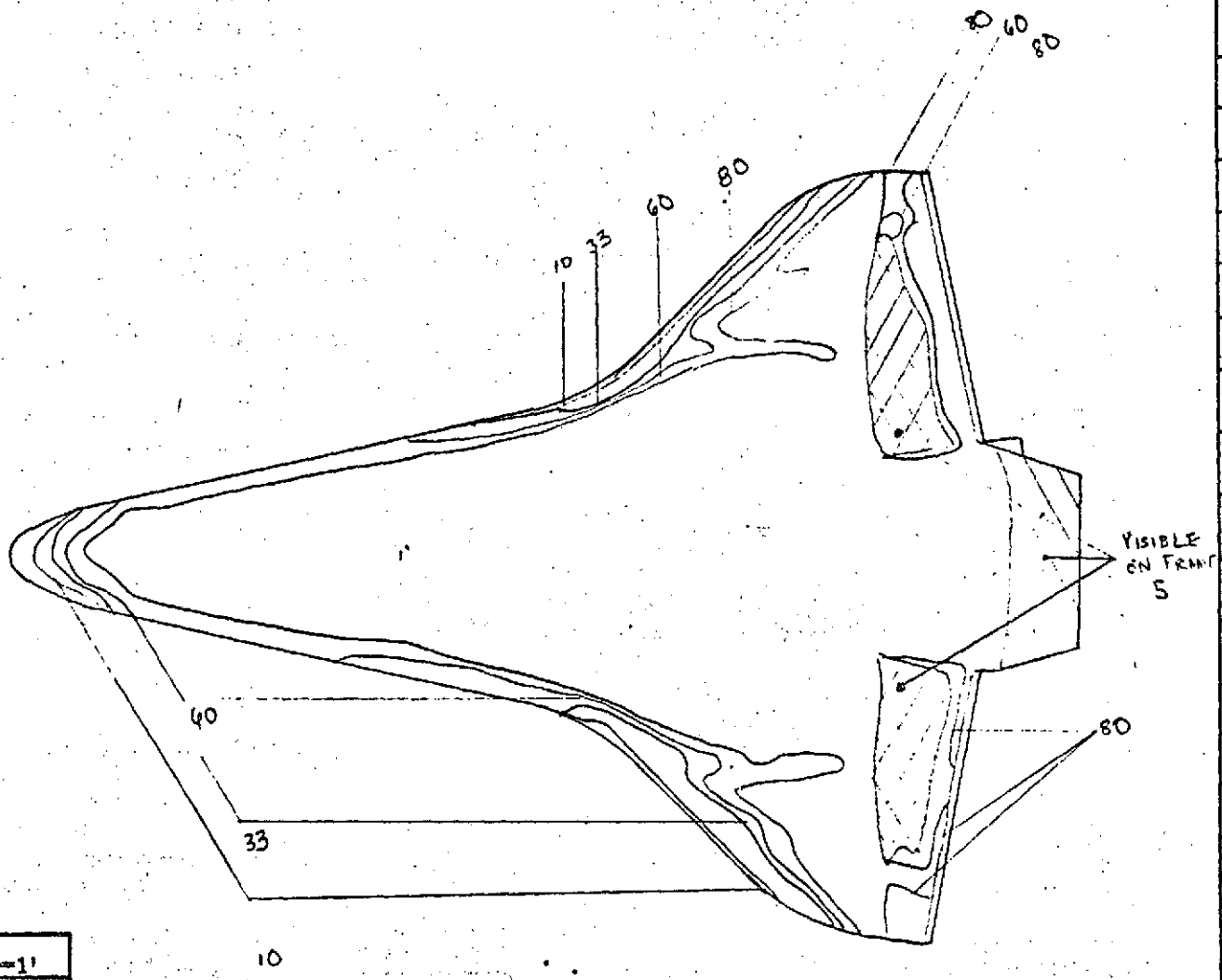

Isotherm	$h/h_{r=1}$
5	.593474
10	.419649
33	.231009
60	.171321
80	.144369

FIG. 75

H_S = .03936 $\frac{BTU}{FT^2\text{-}SEC\text{-}^\circ F}$

CONFIG. 46-4AEBF

LENGTH (ft) = .638

SCALE .00593

FACILITY LRC/VDT

TEST OH42B (RPA)

RUN 4181

M_∞ = 8

P_{total} (psig) = 157

T_{total} (°F) = 810

T_{aw}/T_{total} = .91

R_N per foot = 1×10^6

$T_{phase\ change}$ (°F) = 250

α = 30°

β = 0

ϕ = 0

Camera Coordinates (from model center, x-axis parallel w/ stream, + downstream)

x (in) =

y (in) =

z (in) =

HVD-EVCS

PHASE CHANGE TEST

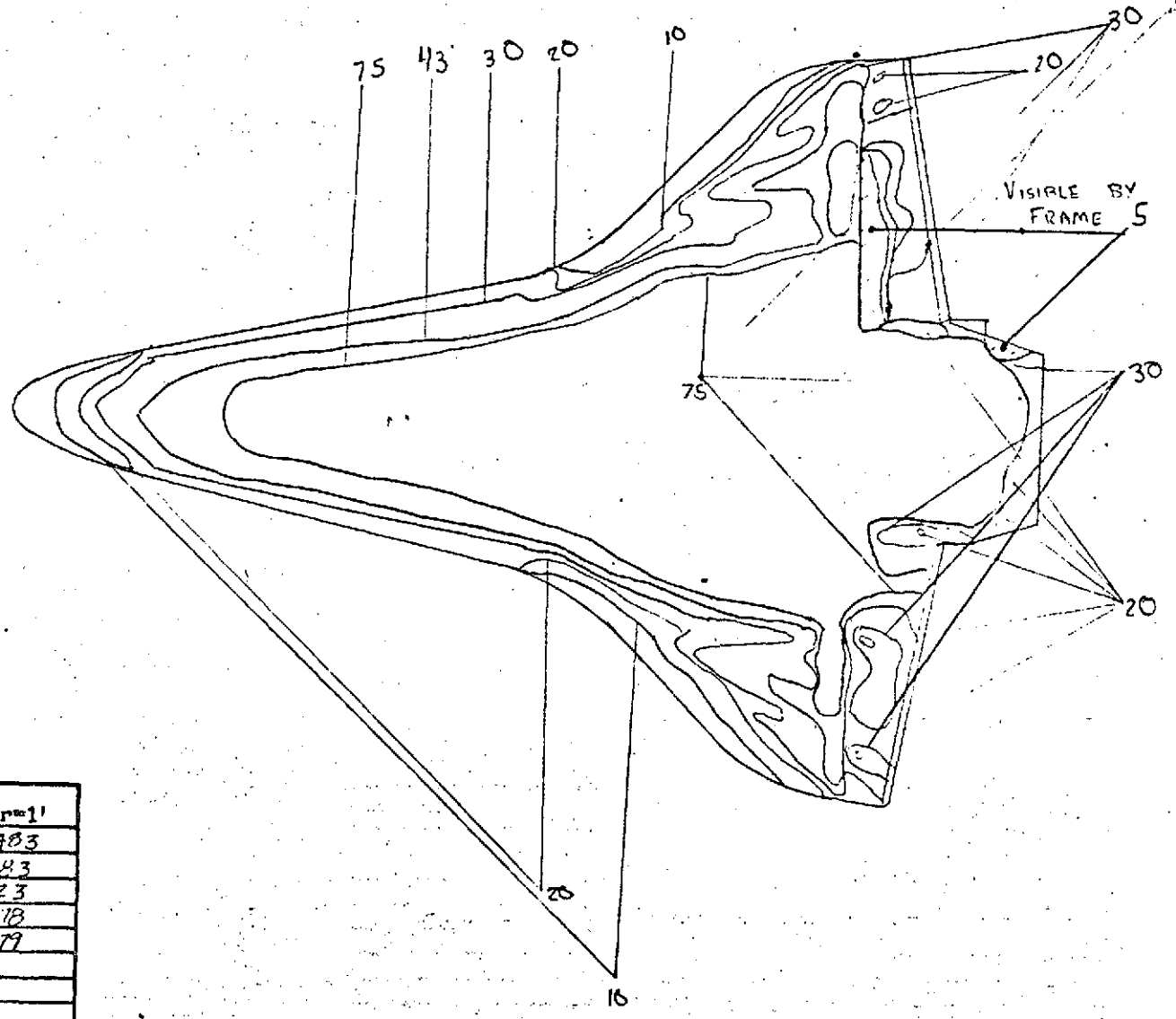

Isotherm	$h/h_{r=1}$
10	.20483
20	.14483
30	.11823
43	.09878
75	.07479

$HS = .040484 \frac{BTU}{FT^2\text{-}SEC}$

FIG. 76

CONFIG. 46-4AEBF

LENGTH (ft) = .638

SCALE .00593

FACILITY LRC/VDT

TEST OH42B (RPA)

RUN 4182

M_∞ = 8

P_{total} (psig) = 170

T_{total} (°F) = 780

T_{aw}/T_{total} = .91

R_N per foot = 1×10^6

$T_{phase\ change}$ (°F) = 175

α = 30°

β = 0

ϕ = 0

Camera Coordinates (from model center, x-axis parallel w/ stream, + downstream)

x (in) =

y (in) =

z (in) =

HIT ℄ ON FRAME ?

NASA Langley (Feb. 1971)

HVD-EVCS

PHASE CHANGE TEST

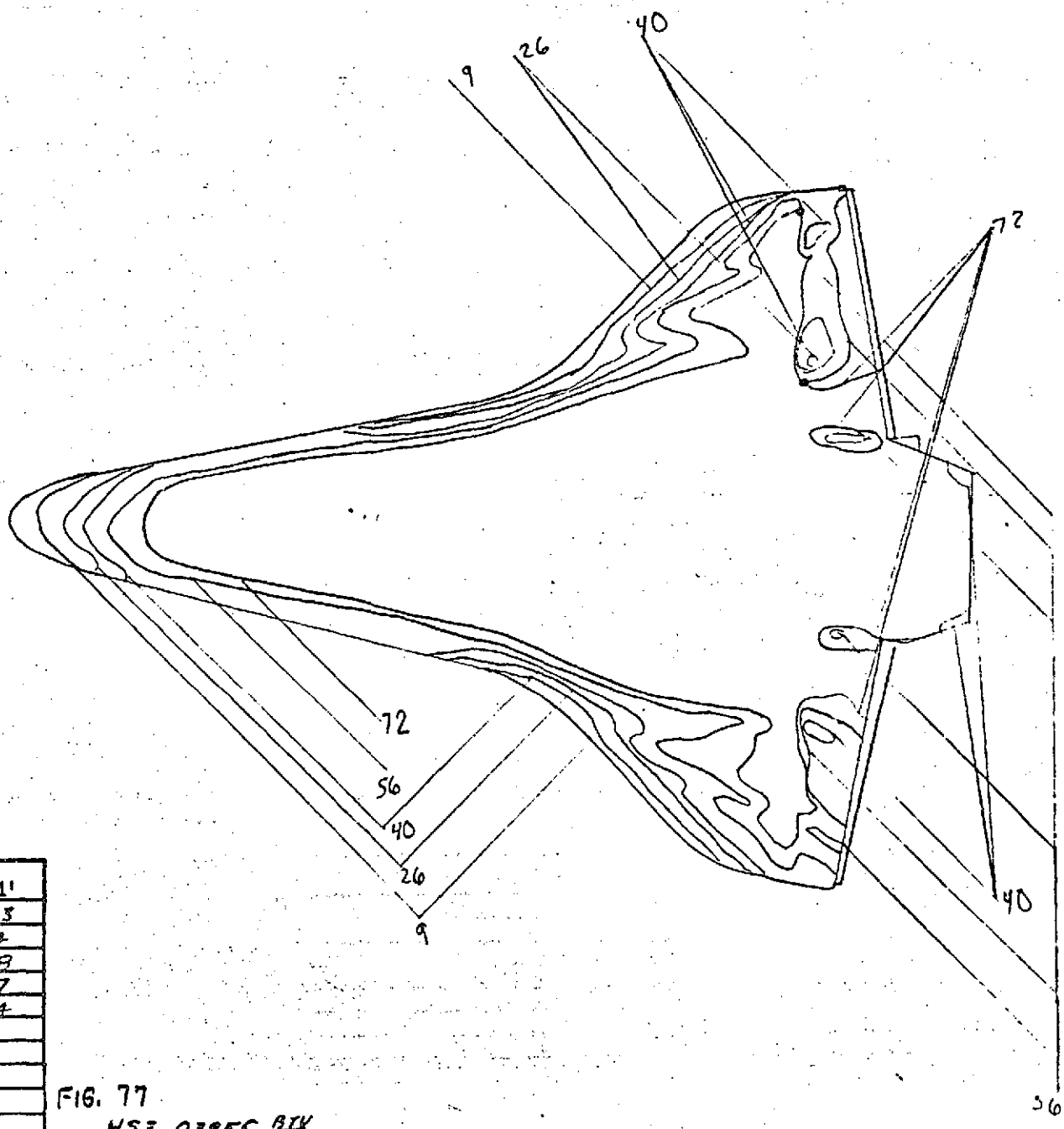

Isotherm	$h/h_{r=1'}$
9	.29003
26	.17064
40	.13758
56	.11627
72	.10254

FIG. 77

H_S = .03955 BTU/ft²-sec-°F

CONFIG. 46-4AEBF

LENGTH (ft) = .638

SCALE .00593

FACILITY LRC/VDT

TEST OH42B RPA

RUN 4183

$M_\infty = 8$

P_{total} (psig) = 160

T_{total} (°F.) = 790

T_{aw}/T_{total} = .91

R_N per foot = 1×10^6

$T_{phase\ change}$ (°F) = 200

α = 30°

β = 0

ϕ = 0

Camera Coordinates (from model center, x-axis parallel w/ stream, + downstream)

x (in) =

y (in) =

z (in) =

Hit 4 on Frame 9

PHASE CHANGE TEST

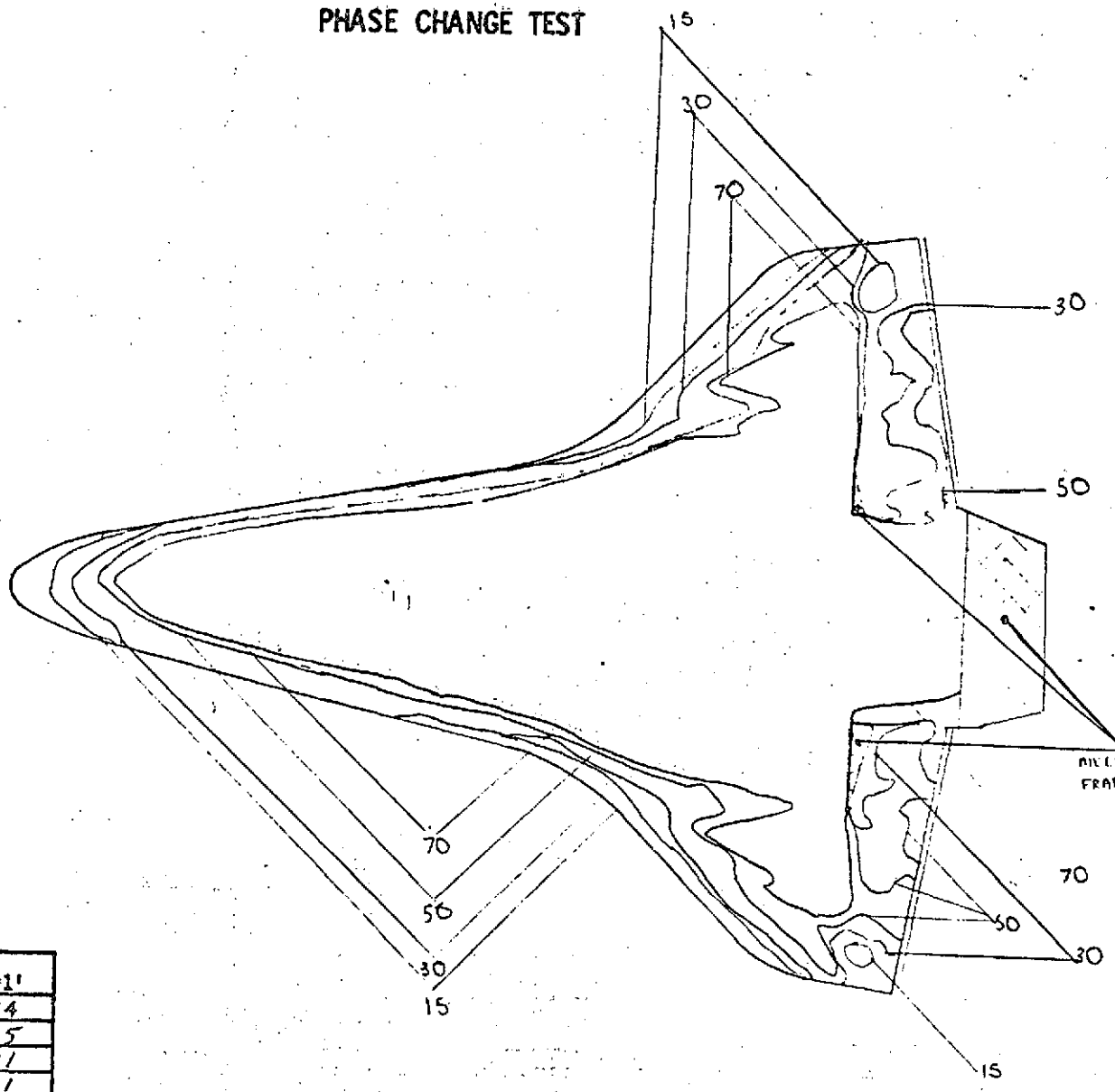

Isotherm	$h/h_{r=1'}$
15	.308334
30	.218025
50	.166891
70	.142731

FIG. 78

H_S = .07835 $\frac{BTU}{FT^2\text{-}SEC\text{-}°F}$

CONFIG. 46-4AEBF

LENGTH (ft) = .638

SCALE .00593

FACILITY LRC/VDT

TEST OH42B RPA

RUN 4184

M_∞ = 8

P_{total} (psig) = 635

T_{total} (°F) = 910

T_{aw}/T_{total} = .91

R_N per foot = 3×10^6

$T_{phase\ change}$ (°F) = 350

α = 30°

β = 0

ϕ = 0

Camera Coordinates (from model center, x-axis parallel w/ stream, + downstream)

x (in) =

y (in) =

z (in) =

PHASE CHANGE TEST

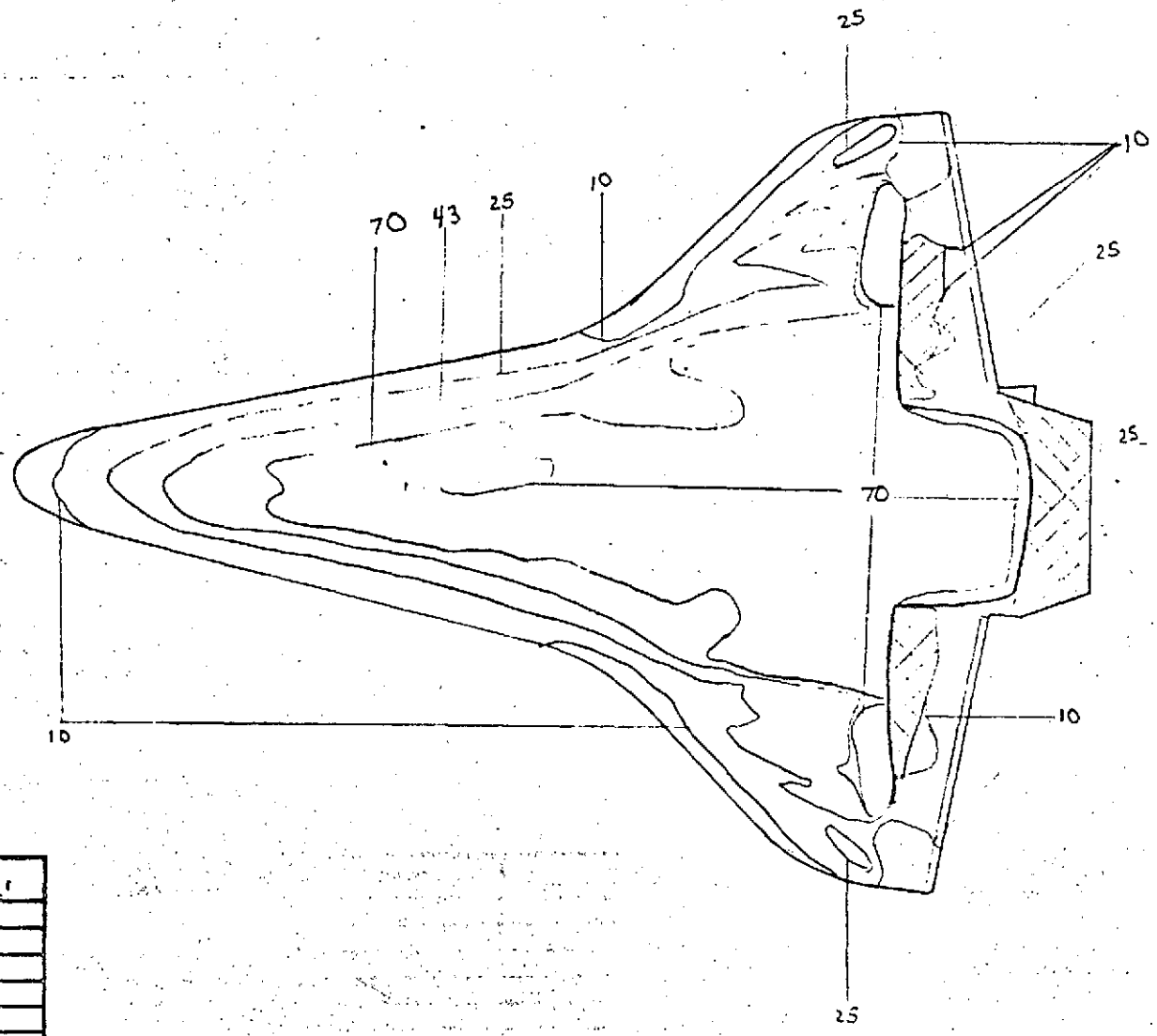

Isotherm	$h/h_{r=1'}$
10	.19613
25	.12404
43	.09458
70	.07413

FIG. 79

H_S = .07339 $\frac{BTU}{FT^2\text{-}SEC\text{-}°F}$

CONFIG. 46-4AEBF

LENGTH (ft) = .638

SCALE .00593

FACILITY LRC/VDT

TEST OH42B RPA

RUN 4185

M_∞ = 8

P_{total} (psig) = 640

T_{total} (°R) = 890

T_{aw}/T_{total} = .91

R_N per foot = 3×10^6

$T_{phase\ change}$ (°F) = 250

α = 30°

β = 0

ϕ = 0

Camera Coordinates (from model center, x-axis parallel w/ stream, + downstream)

x (in) =

y (in) =

z (in) =

PHASE CHANGE TEST

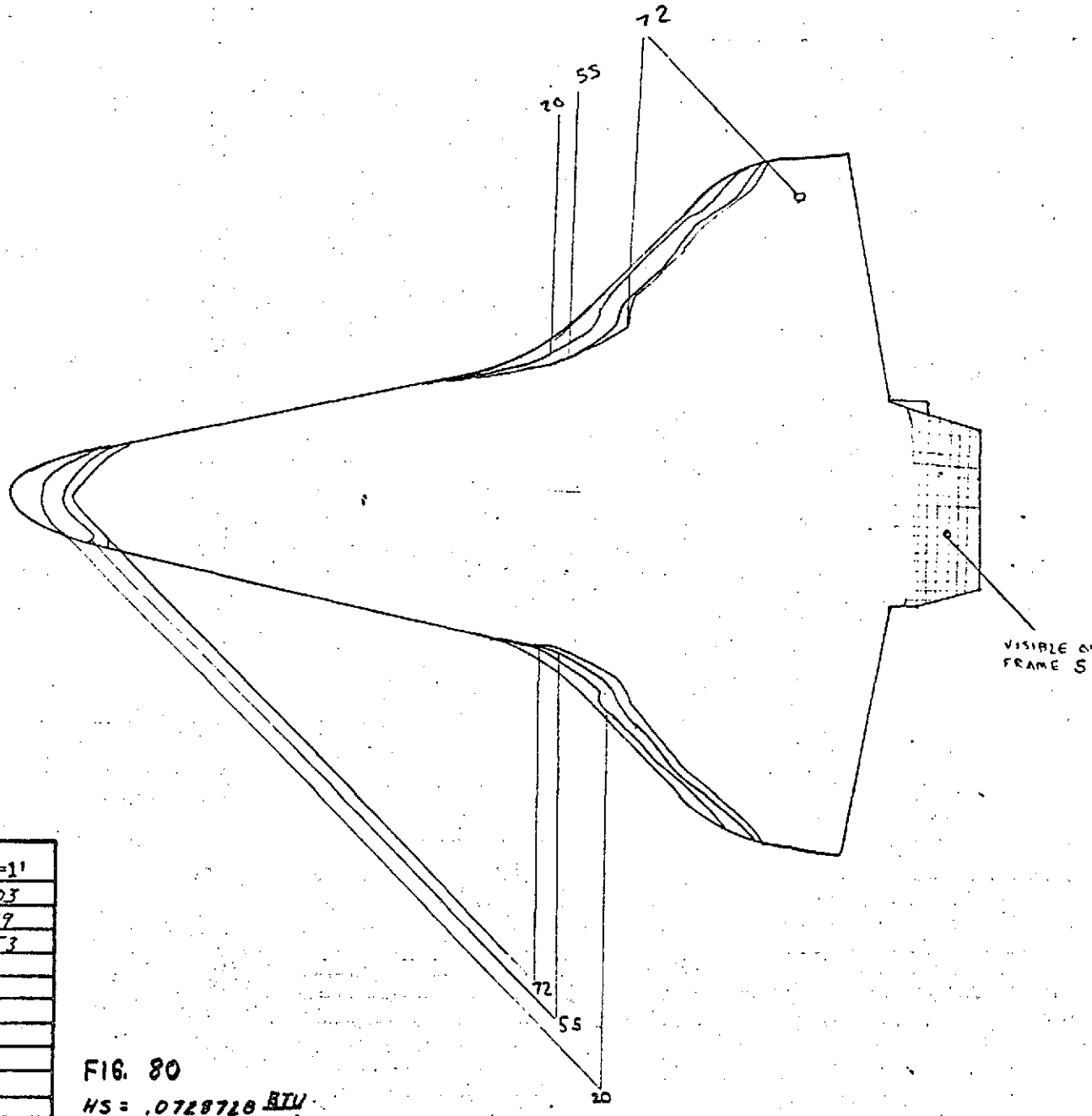

Isotherm	$h/h_{r=1'}$
20	.495503
55	.298799
72	.261153

FIG. 80

HS = .0728728 BTU/FT²-SEC-°F

CONFIG.	46-4BF
LENGTH (ft) =	.638
SCALE	.00593
FACILITY	LRC/VDT
TEST	OH42B (RPA)
RUN	4186
M_∞ =	8
P_{total} (psig) =	630
T_{total} (°F) =	890
T_{aw}/T_{total} =	.91
R_N per foot =	3×10^6
$T_{phase\ change}$ (°F) =	450
α =	30°
β =	0
ϕ =	0
Camera Coordinates (from model center, x-axis parallel w/ stream, + downstream)	
x (in) =	
y (in) =	
z (in) =	

HIT L ON FRAME 9

NDS

HVD-EVCS

PHASE CHANGE TEST

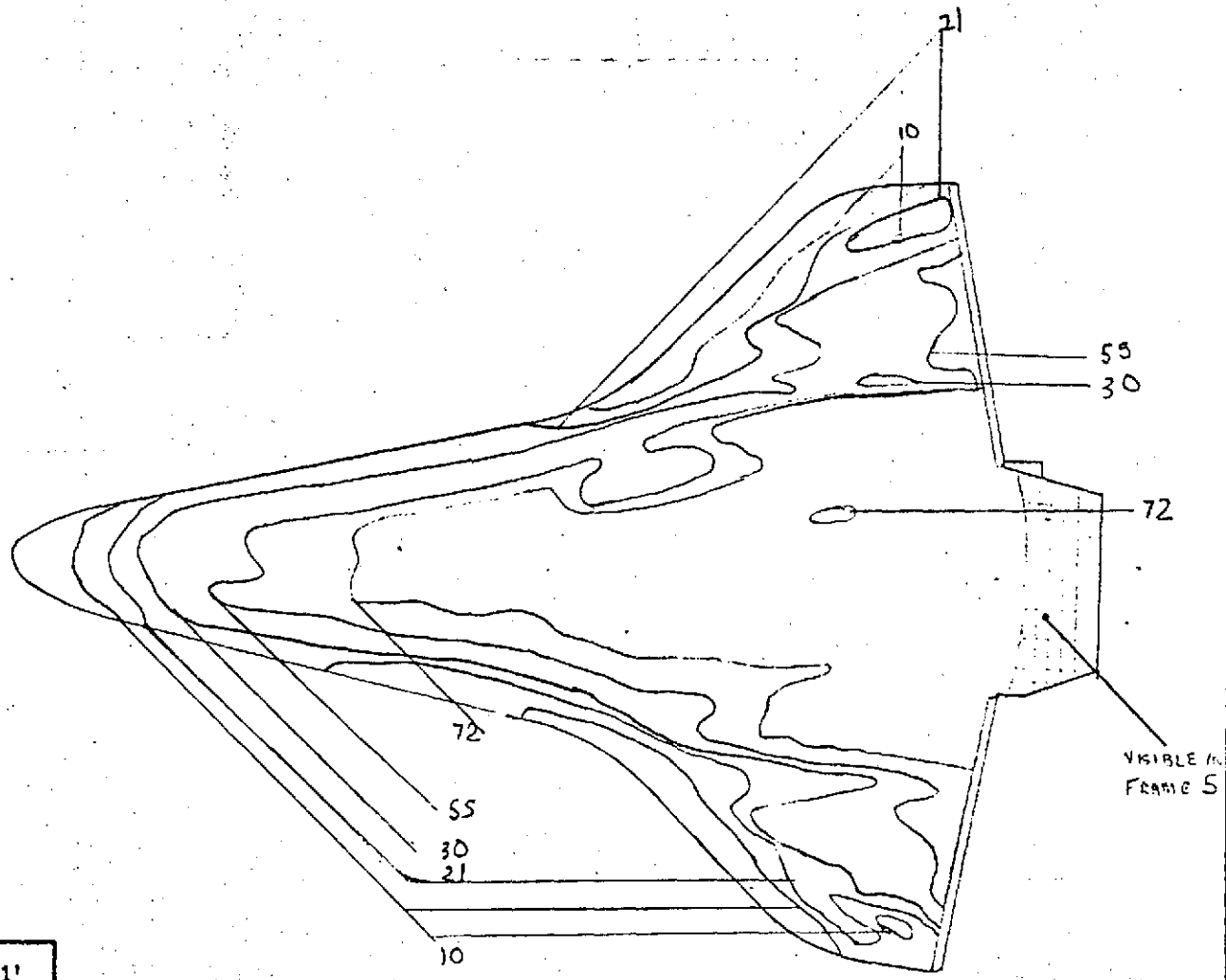

Isotherm	$h/h_{r=1'}$
10	.19936
21	.13157
30	.11510
55	.08501
72	.07420

$H_S = .07261 \frac{BTU}{FT^2 - SEC - °F}$

FIG. 81

CONFIG. 46-4BF

LENGTH (ft) = .638

SCALE .00593

FACILITY LRC/VDT

TEST OH42B RPA

RUN 4188

$M_\infty = 8$

P_{total} (psig) = 675

T_{total} (°F.) = 890

T_{aw}/T_{total} = .91

R_N per foot = 3×10^6

$T_{phase\ change}$ (°F) = 250

α = 30°

β = 0

ϕ = 0

Camera Coordinates (from model center, x-axis parallel w/ stream, + downstream)

x (in) =

y (in) =

z (in) =

Hit 1 on Frame 5

HVD-EVCS

PHASE CHANGE TEST

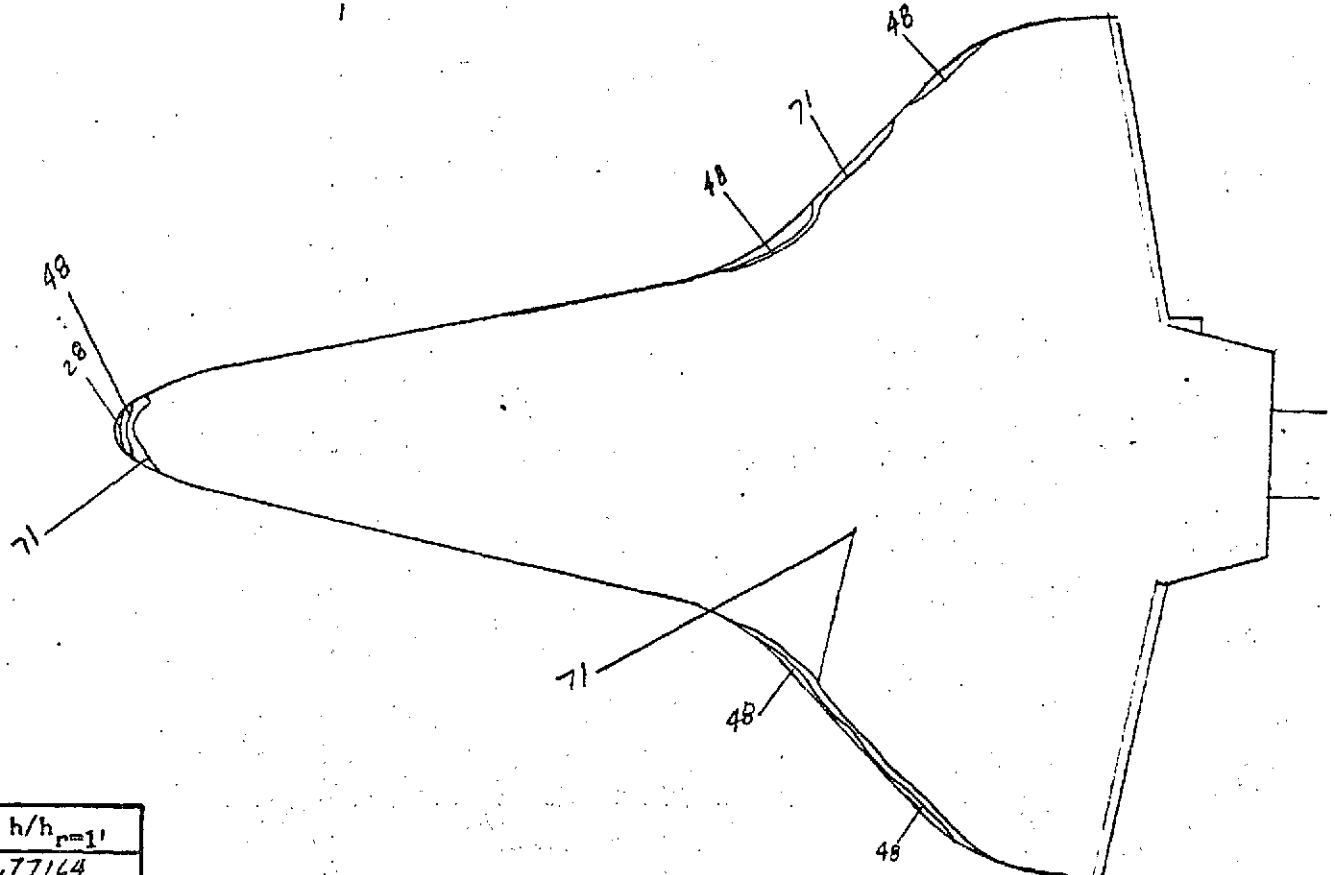

Isotherm	$h/h_{r=1'}$
28	.77164
48	.58935
71	.48458

$HS = .072464 \frac{BTU}{FT^2\text{-}SEC\text{-}°F}$

FIG. 82

CONFIG. 46-4BF

LENGTH (ft) = .638

SCALE .00593

FACILITY LRC/VDT

TEST OH42B (RPA)

RUN 4189

M_∞ = 8

P_{total} (psig) = 625

T_{total} (°F) = 885

T_{aw}/T_{total} = .91

R_N per foot = 3×10^6

$T_{phase\ change}$ (°F) = 550

α = 30°

β = 0

ϕ = 0

Camera Coordinates (from model center, x-axis parallel w/ stream, + downstream)

x (in) =

y (in) =

z (in) =

℄ AT TIME 10

PHASE CHANGE TEST

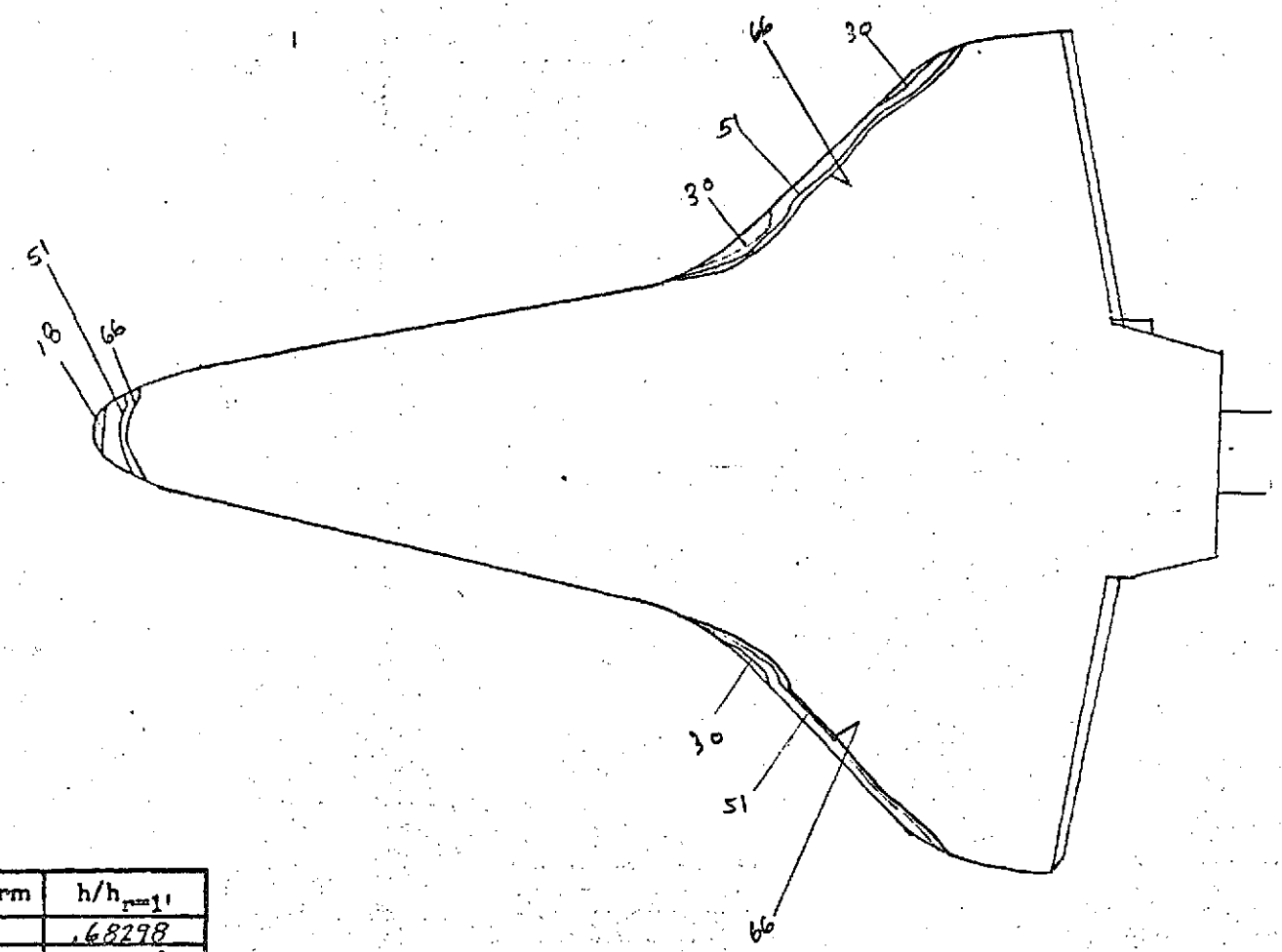

Isotherm	$h/h_{r=1}$
18	.68298
30	.52903
51	.40575
66	.35667

$HS = .07284 \frac{BTU}{FT^2 - SEC - °F}$

FIG. 83

CONFIG. 46-48F

LENGTH (ft) = .638

SCALE .00593

FACILITY LRC/VDT

TEST OH42B (RPA)

RUN 4190

M_∞ = 8

P_{total} (psig) = 630

T_{total} (°F) = 895

T_{aw}/T_{total} = .91

R_N per foot = 3×10^6

$T_{phase\ change}$ (°F) = 500

α = 30°

β = 0

ϕ = 0

Camera Coordinates (from model center, x-axis parallel w/ stream, + downstream)

x (in) =

y (in) =

z (in) =

℄ AT FRAME 9

PHASE CHANGE TEST

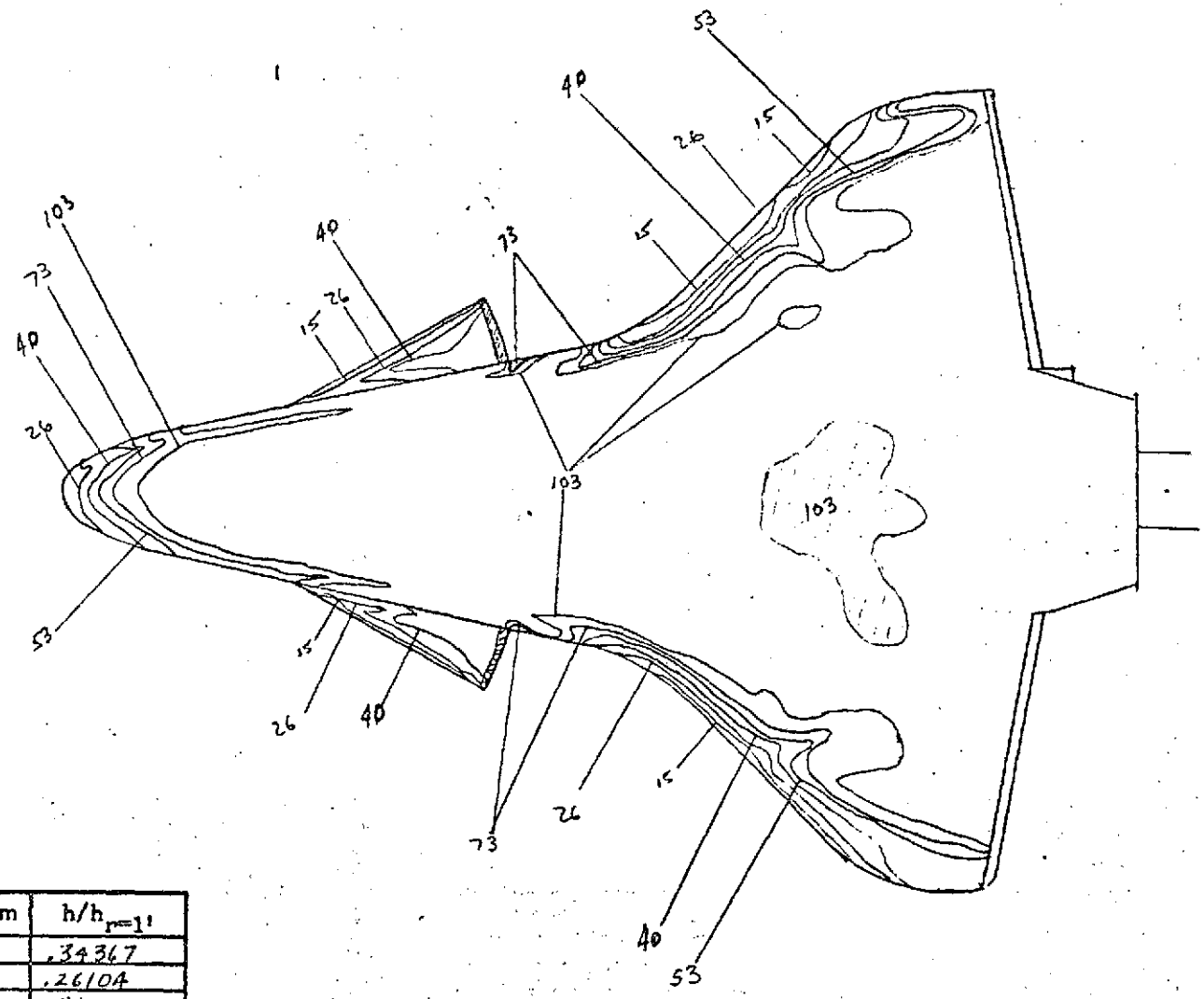

Isotherm	$h/h_{r=1'}$
15	.34367
26	.26104
40	.21045
53	.18283
73	.15578
103	.13115

H_S = .04007 $\frac{BTU}{FT^2\text{-}SEC\text{-}^\circ F}$

FIG. 84

CONFIG. 46-5

LENGTH (ft) = .638

SCALE .00593

FACILITY LRC/VDT

TEST OH42B (RPA)

RUN 4191

M_∞ = 8

P_{total} (psig) = 164

T_{total} (°F) = 805

T_{aw}/T_{total} = .91

R_N per foot = 1×10^6

$T_{phase\ change}$ (°F) = 250

α = 30°

β = 0

ϕ = 0

Camera Coordinates (from model center, x-axis parallel w/ stream, + downstream)

x (in) =

y (in) =

z (in) =

℄ AT FRAME 9

PHASE CHANGE TEST

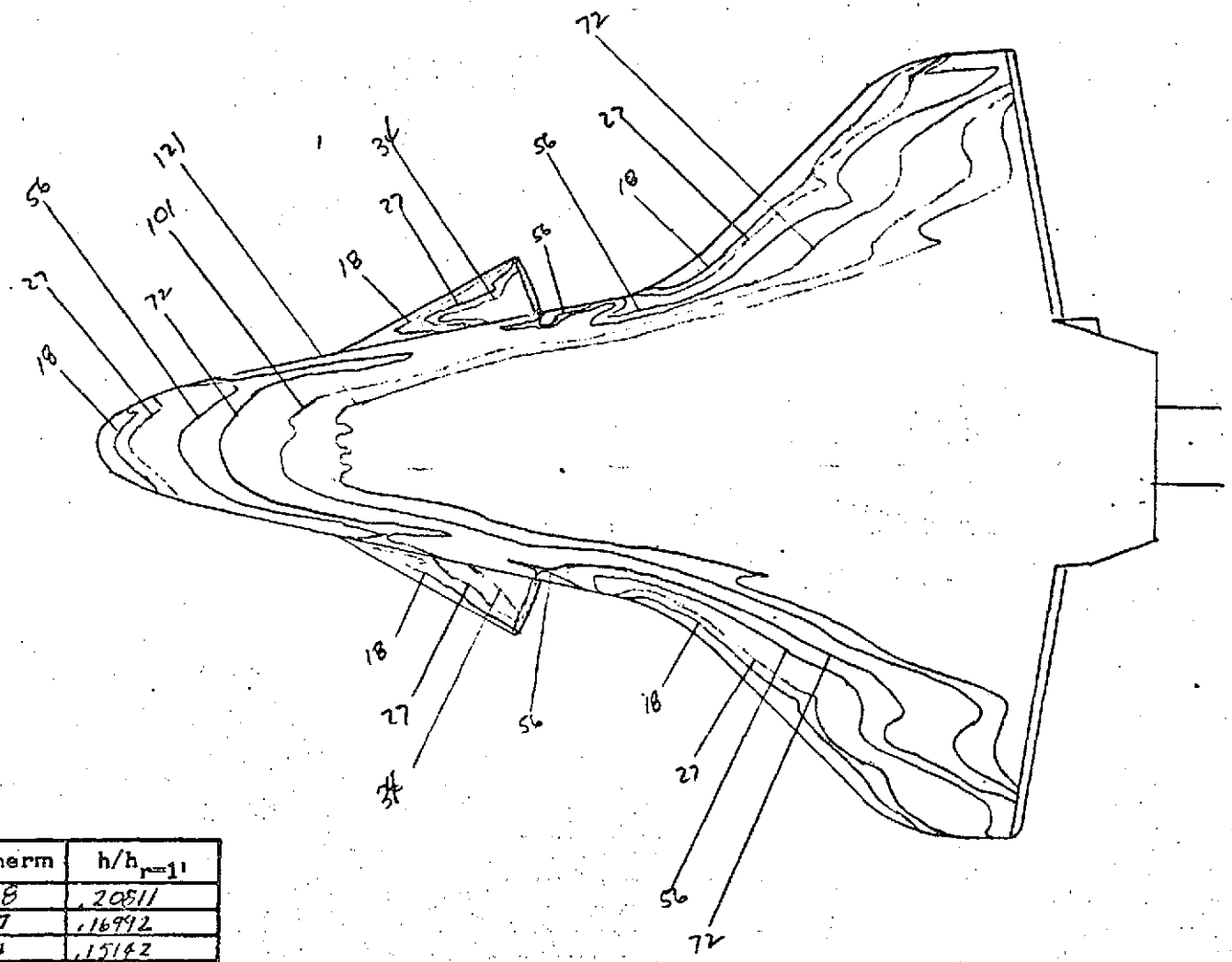

Isotherm	$h/h_{r=1'}$
18	.20811
27	.16992
34	.15142
56	.11799
72	.10406
101	.08756
121	.08027

$HS = .03925 \frac{BTU}{FT^2 SEC \cdot °F}$

FIG. 85

CONFIG.	46-5
LENGTH (ft) =	.638
SCALE	.00593
FACILITY	LRC/VDT
TEST	OH42B KPA
RUN	4192
M_∞ =	8
P_{total} (psig) =	164
T_{total} (°F) =	805
T_{aw}/T_{total} =	.91
R_N per foot =	1×10^6
$T_{phase\ change}$ (°F) =	2000
α =	30°
β =	0
ϕ =	0
Camera Coordinates (from model center, x-axis parallel w/ stream, + downstream)	
x (in) =	
y (in) =	
z (in) =	

℄ AT FRAME 10.

PHASE CHANGE TEST

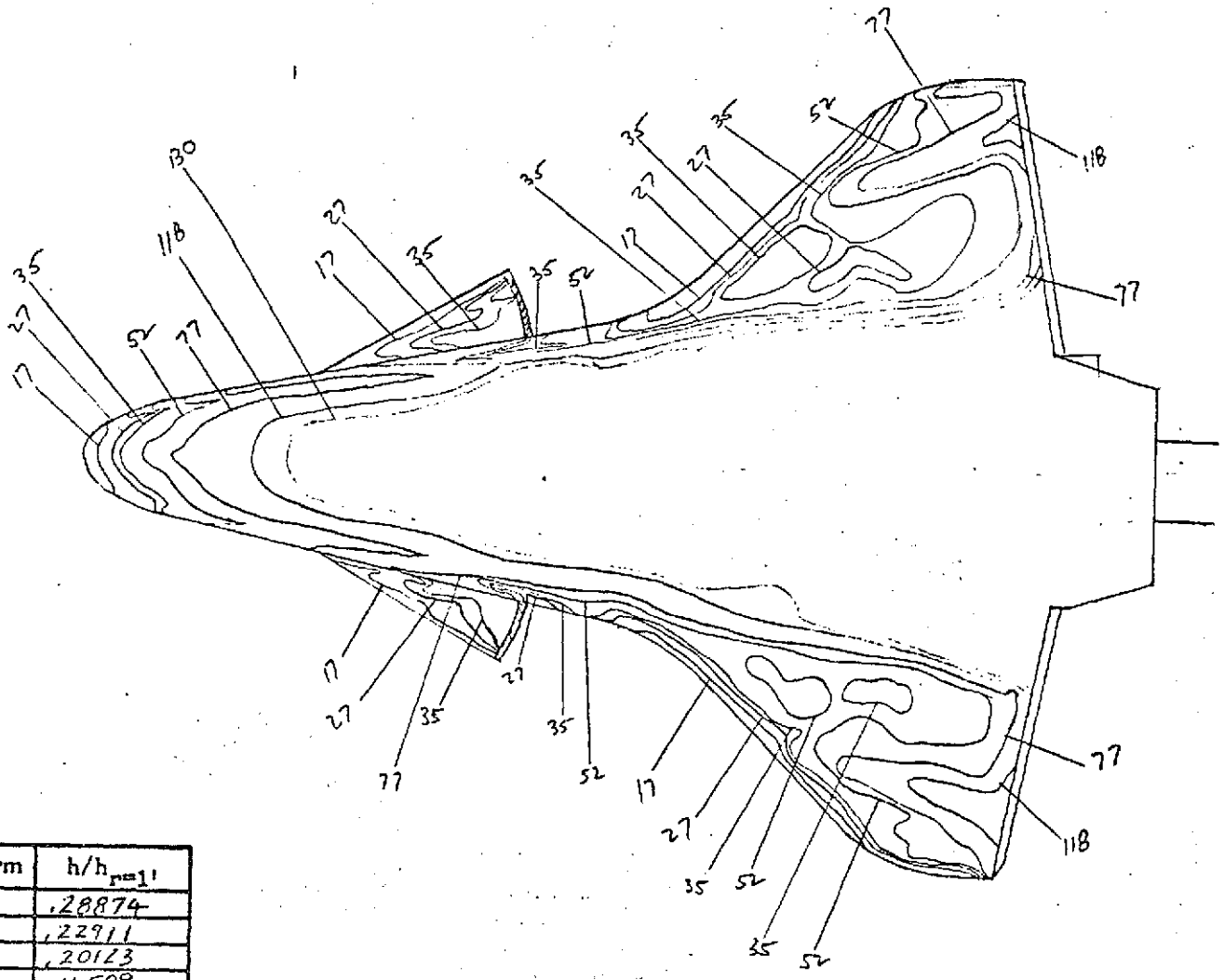

Isotherm	$h/h_{r=1'}$
17	.28874
27	.22911
35	.20123
52	.16509
77	.13567
118	.10959
130	.10441

Fig. 86

$HS = .07283 \frac{BTU}{FT^2\text{-}SEC\text{-}^\circ F}$

CONFIG. 46-5

LENGTH (ft) = .638

SCALE .00593

FACILITY LRC/VDT

TEST OH42B RPA

RUN 4193

$M_\infty = 8$

P_{total} (psig) = 625

T_{total} (°F) = 910

$T_{aw}/T_{total} = .91$

R_N per foot = 3×10^6

$T_{phase\ change}$ (°F) = 350

α = 30°

β = 0

ϕ = 0

Camera Coordinates (from model center, x-axis parallel w/ stream, + downstream)

x (in) =

y (in) =

z (in) =

@ AT FRAME 9

PHASE CHANGE TEST

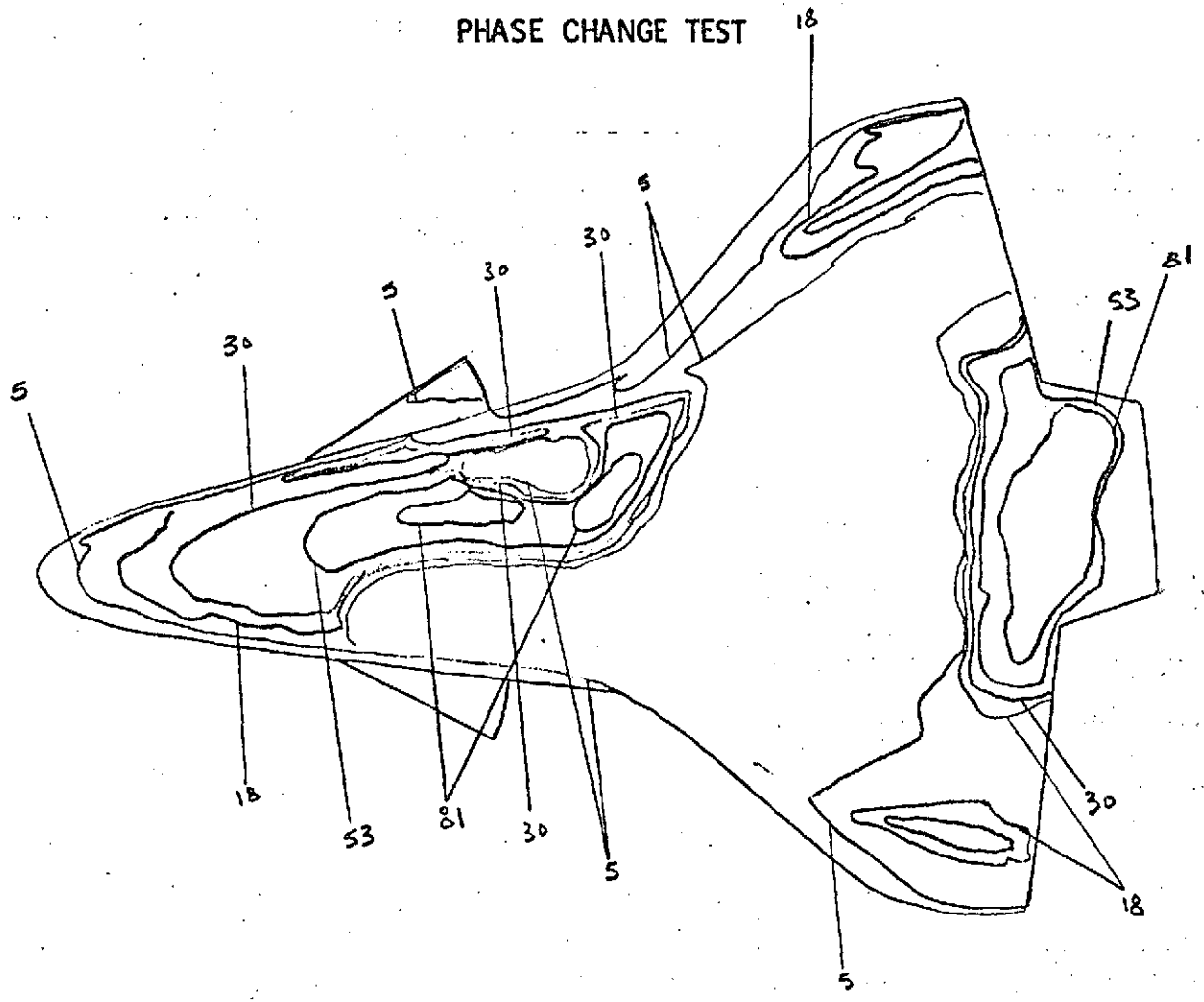

Isotherm	$h/h_{r=1}$
5	.31964
18	.16847
30	.13049
53	.09518
81	.07942

FIG. 87

CONFIG. 46-5

LENGTH (ft) = .638

SCALE .00593

FACILITY LRC/VDT

TEST OH42C (RPA)

RUN 4273

M_∞ = 8

P_{total} (psig) = 635

T_{total} (°F) = 895

T_{aw}/T_{total} = .91

R_N per foot = 3×10^6

$T_{phase\ change}$ (°F) = 275

α = 30°

β = 0

ϕ = 0

Camera Coordinates (from model center, x-axis parallel w/ stream, + downstream)

x (in) =

y (in) =

z (in) =

MODEL HIT EQ FRAMES

HS = .072795 $\frac{BTU}{FT^2\text{-}SEC\text{-}^\circ F}$

PHASE CHANGE TEST

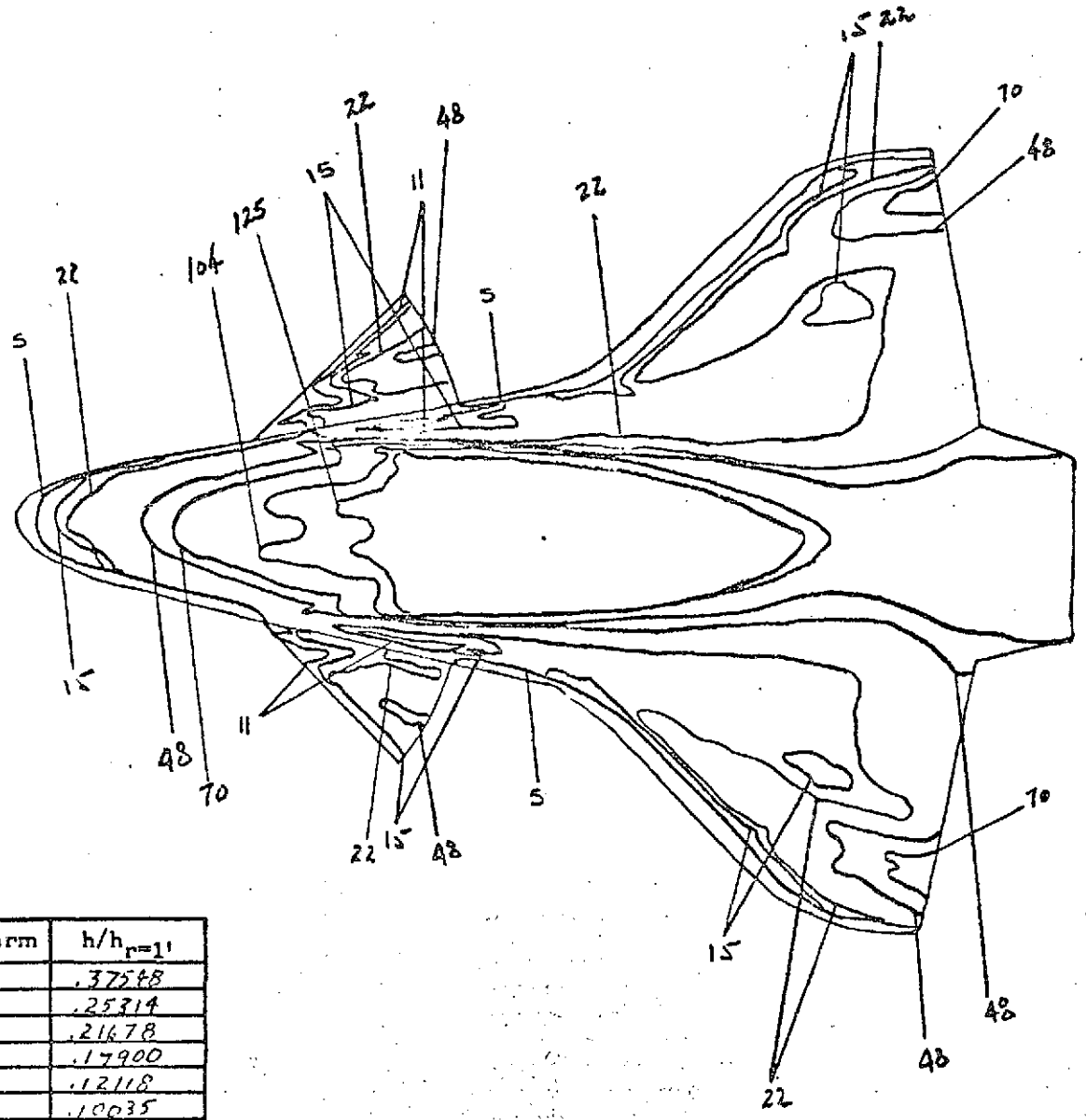

Isotherm	$h/h_{r=1'}$
5	.37548
11	.25314
15	.21678
22	.17900
48	.12118
70	.10035
104	.08232
125	.07509

FIG. 88

CONFIG. 46-6

LENGTH (ft) = .638

SCALE .00593

FACILITY LRC/UDT

TEST OH42C RPA

RUN 4274

M_∞ = 8

P_{total} (psi) = 655

T_{total} (°F) = 900

T_{aw}/T_{total} = .91

R_N per foot = 3×10^6

$T_{phase\ change}$ (°F) = 300°

α = 30°

β = 0

ϕ = 0

Camera Coordinates (from model center, x-axis parallel w/ stream, + downstream)

x (in) =

y (in) =

z (in) =

MODEL Hits ℄ @ 5 Frames

$HS = .073694 \frac{BTU}{FT^2\text{-}SEC\text{-}°R}$

NASA Langley (Feb. 1971)

HVD-EVCS

PHASE CHANGE TEST

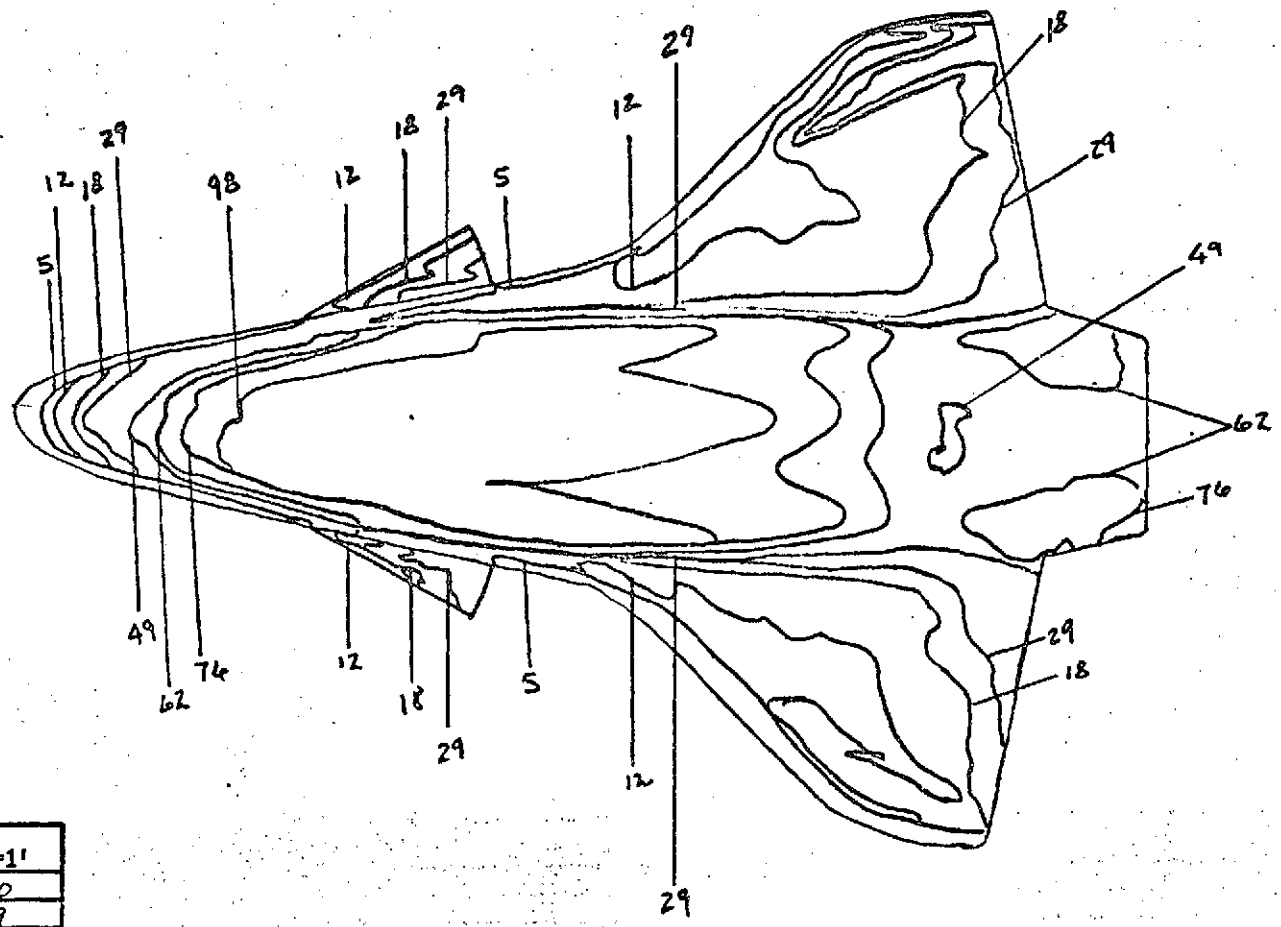

Isotherm	$h/h_{r=1}$
5	.47590
12	.30719
18	.25082
29	.19761
49	.15202
62	.13515
76	.12207
98	.10750

FIG. 89

CONFIG. 46-5

LENGTH (ft) = .638

SCALE .00593

FACILITY LRC/VDT

TEST OH42C RPA

RUN 427S

M_∞ = 8

P_{total} (psi) = 1395

T_{total} (°F) = 920

T_{aw}/T_{total} = .91

R_N per foot = 6×10^6

$T_{phase\ change}$ (°F) = 400

α = 30°

β = 0

ϕ = 0

Camera Coordinates (from model center, x-axis parallel w/ stream, + downstream)

x (in) =

y (in) =

z (in) =

MODEL HITS @ FR 5

$HS = .10463 \frac{BTU}{FT^2 \cdot SEC \cdot °F}$

PHASE CHANGE TEST

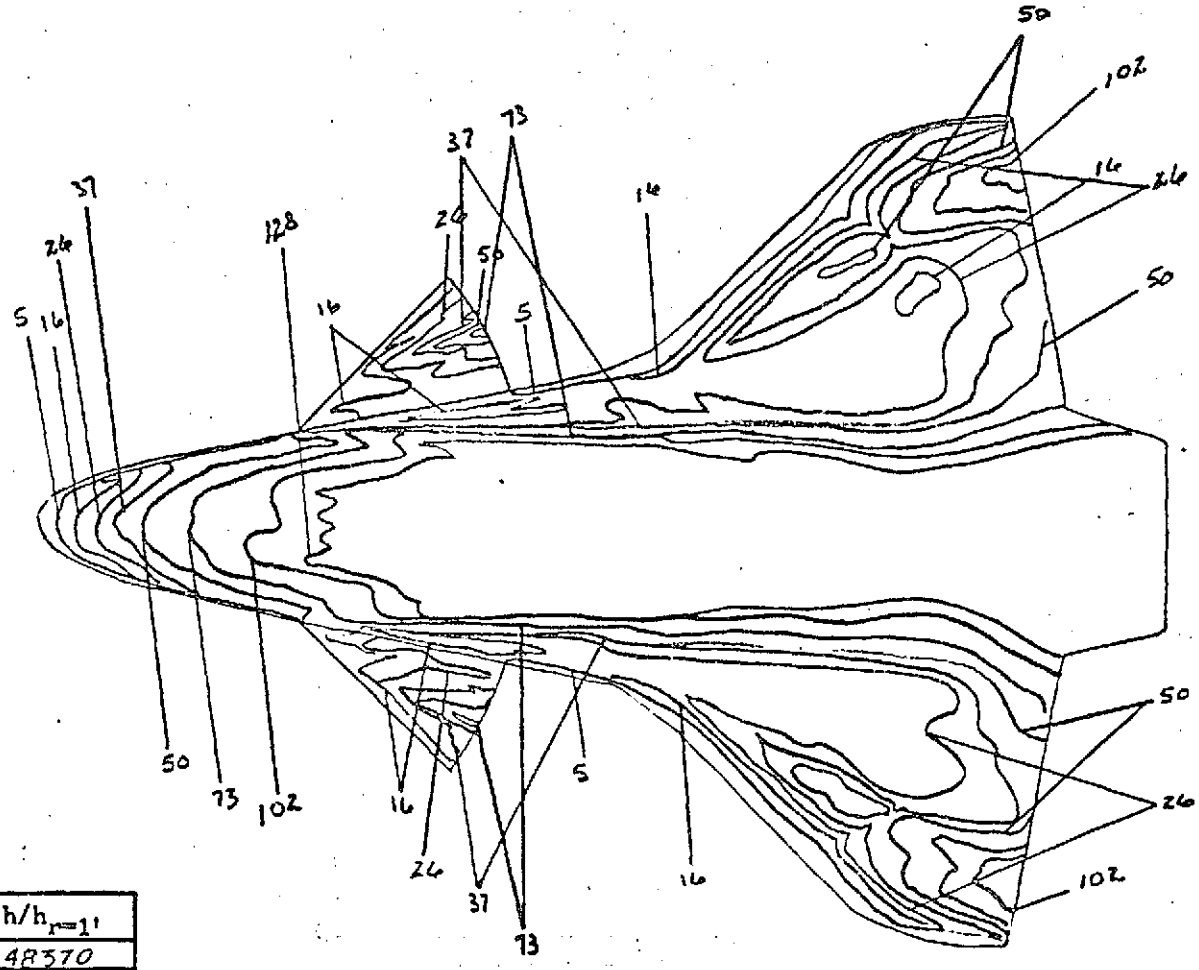

Isotherm	$h/h_{r=1}$
5	.48370
16	.27039
26	.21211
37	.17781
50	.15296
73	.12659
102	.10109
128	.09560

FIG. 90

CONFIG. 46-6

LENGTH (ft) = .638

SCALE .00593

FACILITY LRC/VDT

TEST OH42C RPA

RUN 4276

M_∞ = 8

P_{total} (psig) = 620

T_{total} (°F) = 950

T_{aw}/T_{total} = .91

R_N per foot = 3×10^6

$T_{phase\ change}$ (°F) = 350

α = 30°

β = 0

ϕ = 0

Camera Coordinates (from model center, x-axis parallel w/ stream, + downstream)

x (in) =

y (in) =

z (in) =

Model Hits & Runs

HS = .072373 $\frac{BTU}{FT^2\text{-}SEC\text{-}°F}$

HVD-EVCS

PHASE CHANGE TEST

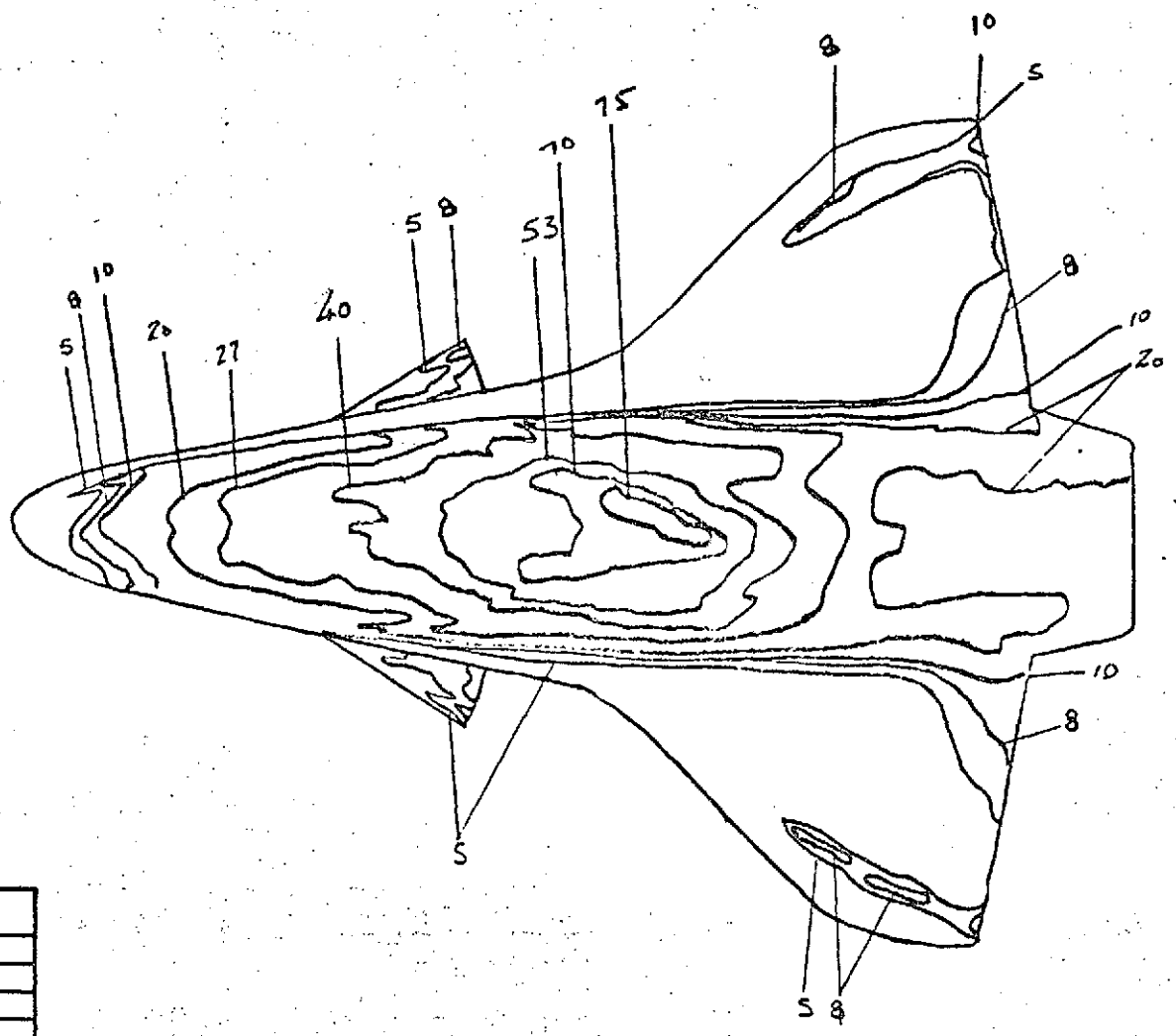

Isotherm	$h/h_{r=1'}$
5	.24555
8	.19412
10	.17363
20	.12277
27	.10567
40	.08682
53	.07542
70	.06563
75	.06340

FIG. 91

CONFIG. 46-5

LENGTH (ft) = .638

SCALE .00593

FACILITY LRC/VDT

TEST OH42C RPA

RUN 4279

M_∞ = 3.0

P_{total} (psig) = 1395

T_{total} (°F) = 940

T_{aw}/T_{total} = .91

R_N per foot = 6×10^6

$T_{phase\ change}$ (°F) =

α = 30°

β = 0

ϕ = 0

Camera Coordinates (from model center, x-axis parallel w/ stream, + downstream)

x (in) =

y (in) =

z (in) =

MODEL SITE & GRAVES

$HS = .10498 \frac{BTU}{FT^2\text{-}SEC\text{-}°F}$

HVD-EVCS

PHASE CHANGE TEST

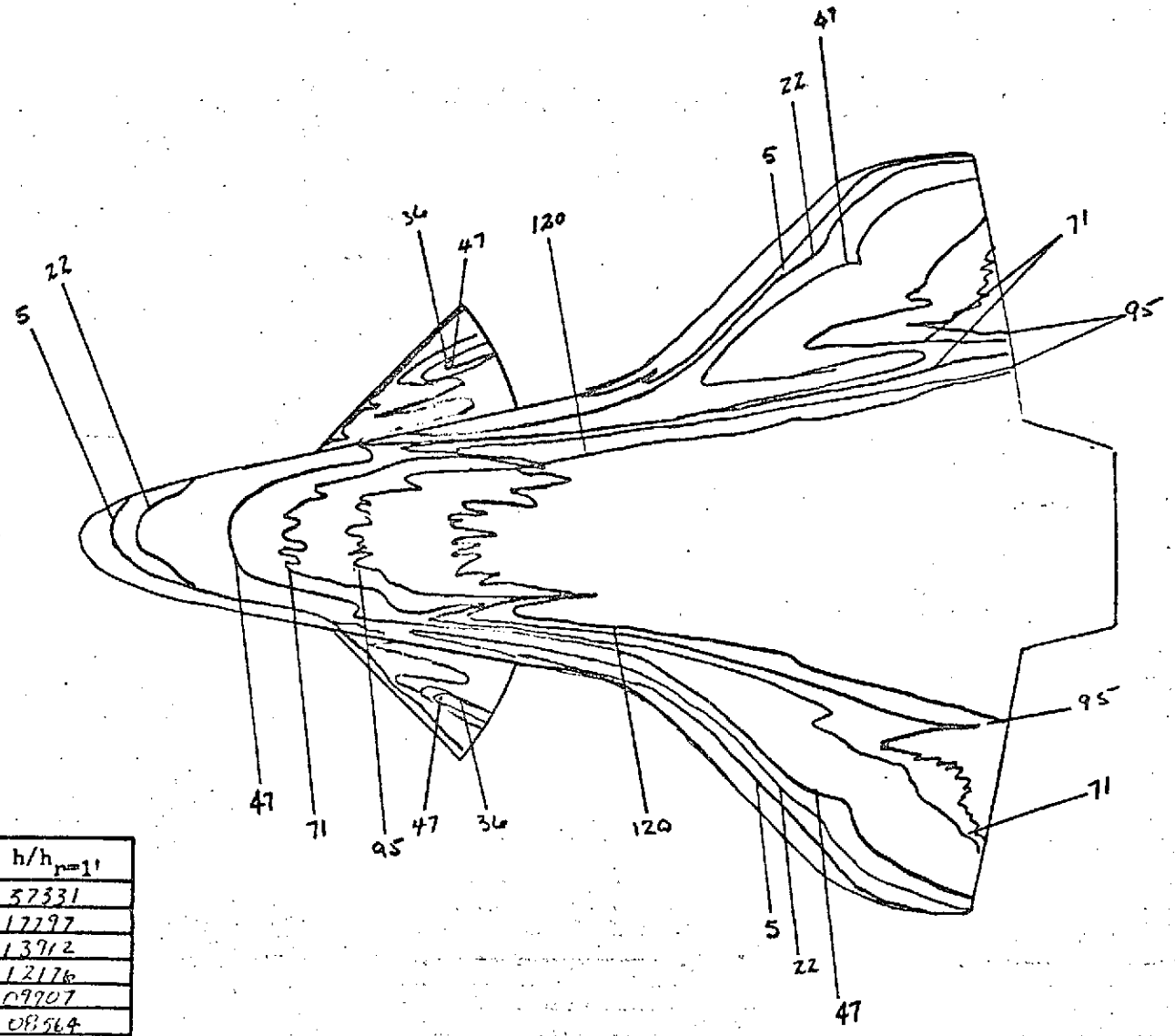

Isotherm	$h/h_{r=1'}$
5	.57331
22	.17797
36	.13712
47	.12176
71	.09907
95	.08564
120	.07620

FIG. 92

CONFIG. 46-6

LENGTH (ft) = .638

SCALE .00593

FACILITY LRC/VDT

TEST OH 42C (RPA)

RUN 4280

M_∞ = 8

P_{total} (psig) = 160

T_{total} (°F) = 785

T_{aw}/T_{total} = .91

R_N per foot = 1×10^6

$T_{phase\ change}$ (°F) = 200

α = 30°

β = 0

ϕ = 0

Camera Coordinates (from model center, x-axis parallel w/ stream, + downstream)

x (in) =

y (in) =

z (in) =

MODEL HITS 4 @ FRAMES 5

HS = .03956 BTU / FT²-SEC-°F

HVD-EVCS

PHASE CHANGE TEST

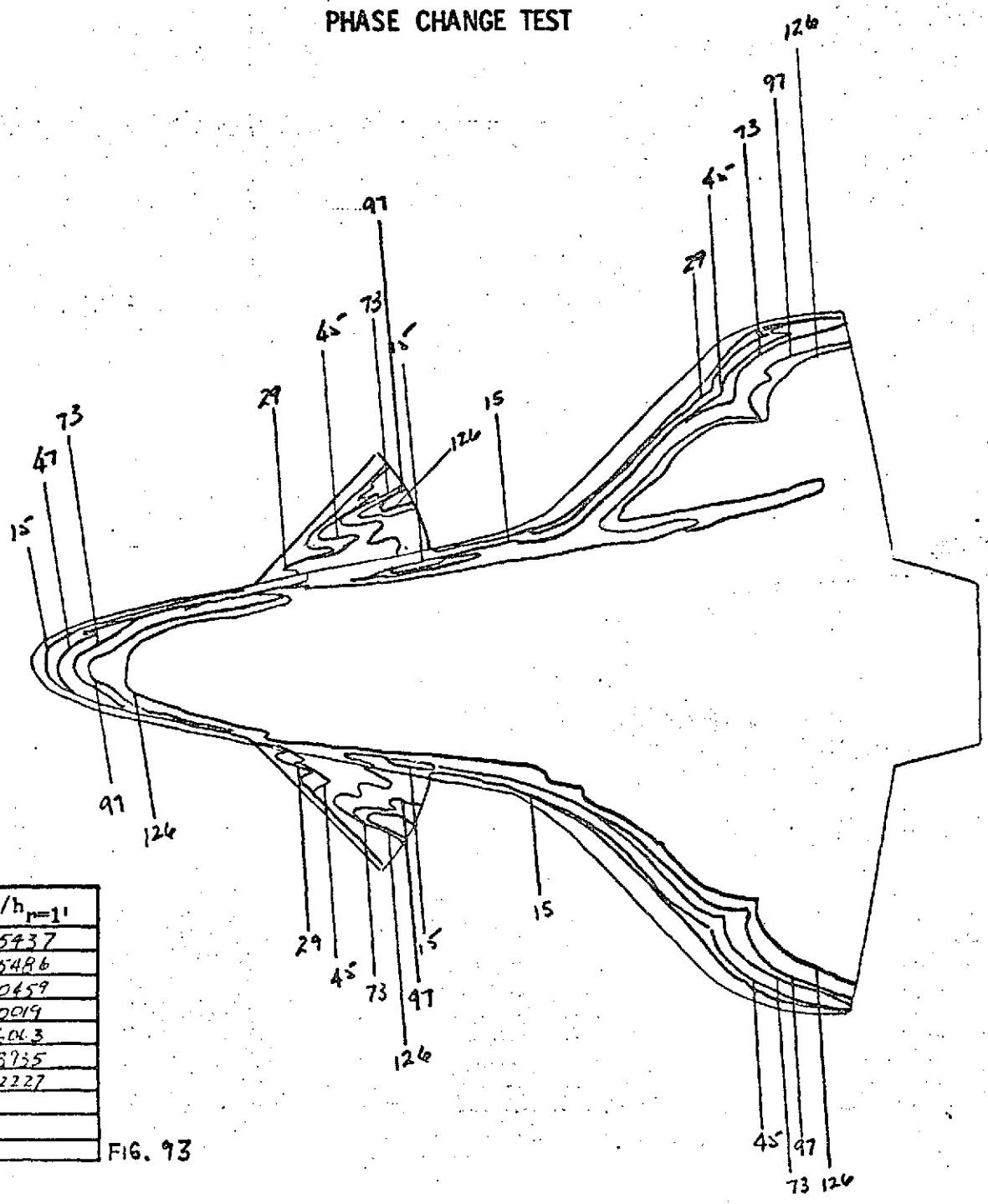

Isotherm	$h/h_{n=1}$
15	.35937
29	.25486
45	.20659
47	.20019
73	.16063
97	.13935
126	.12227

FIG. 93

CONFIG. 46-6

LENGTH (ft) = .638

SCALE .00593

FACILITY ARC/VDT

TEST OH42C RPA

RUN 4283

M_∞ = 8

P_{total} (psig) = 160

T_{total} (°F) = 788

T_{aw}/T_{total} = .91

R_N per foot = 1×10^6

$T_{phase\ change}$ (°F) = 250°

α = 30°

β = 0

ϕ = 0

Camera Coordinates (from model center, x-axis parallel w/ stream, + downstream)

x (in) =

y (in) =

z (in) =

MODEL HITS @ AT 5 FRAMES

HS = .039522 $\frac{BTU}{FT^2\text{-}SEC\text{-}°F}$

HVD-EVCS

PHASE CHANGE TEST

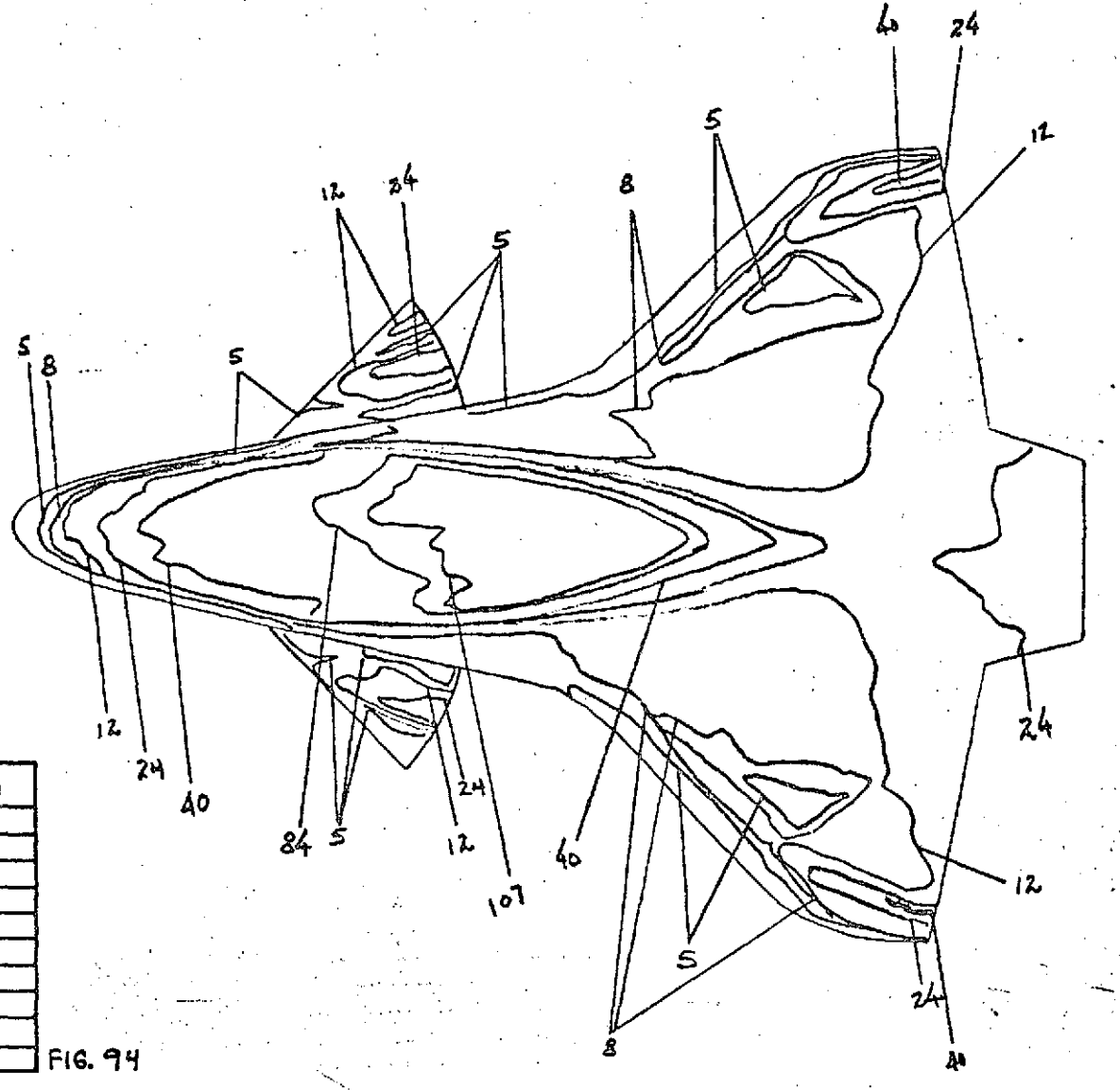

Isotherm	$h/h_{r=1'}$
5	.35889
8	.28373
12	.23166
24	.16381
40	.12609
84	.08756
107	.07758

FIG. 94

CONFIG. 46-6

LENGTH (ft) = .638

SCALE .00593

FACILITY LRC/VDT

TEST OH42C RPA

RUN 4284

M_∞ = 8

P_{total} (psi) = 1400

T_{total} (°F) = 920

T_{aw}/T_{total} = .91

R_N per foot = 6×10^6

$T_{phase\ change}$ (°F) = 350

α = 30°

β = 0

ϕ = 0

Camera Coordinates (from model center, x-axis parallel w/ stream, + downstream)

x (in) =

y (in) =

z (in) =

MODEL HITS @ FRAME 5

$HS = .10490 \frac{BTU}{FT^2\text{-}SEC\text{-}°F}$

HVD-EVCS

PHASE CHANGE TEST

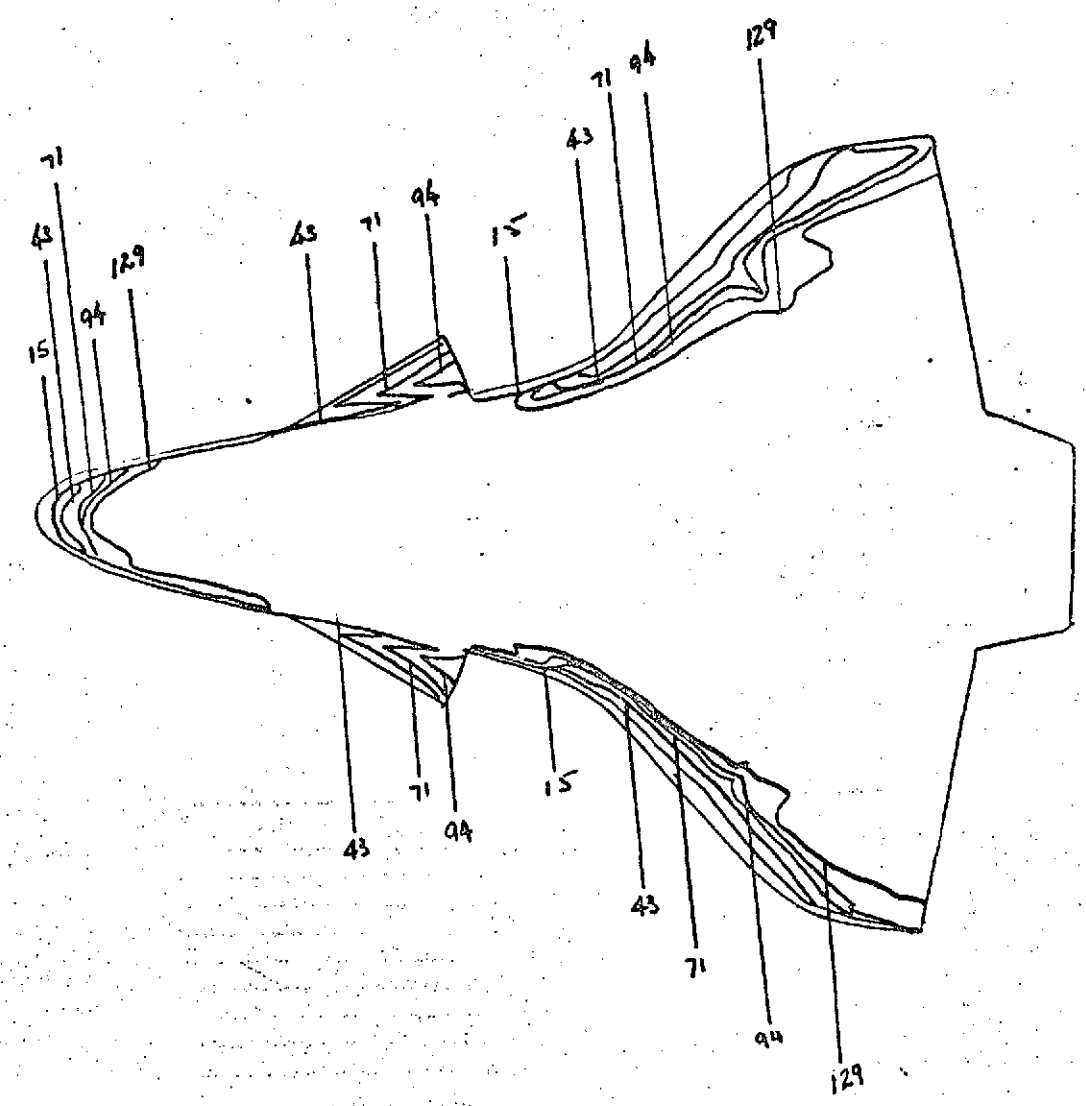

Isotherm	$h/h_{r=1'}$
15	.38793
43	.22912
71	.17831
94	.15497
129	.13228

FIG. 95

CONFIG. 46-5

LENGTH (ft) = .638

SCALE .00593

FACILITY LRC/VDT

TEST OH42C RPA

RUN 4286

M_∞ = 8.0

P_{total} (psig) = 155

T_{total} (°F) = 730

T_{aw}/T_{total} = .92

R_N per foot = 1×10^6

$T_{phase\ change}$ (°F) = 250

α = 35°

β = 0

ϕ = 0

Camera Coordinates (from model center, x-axis parallel w/ stream, + downstream)

x (in) =

y (in) =

z (in) =

Model Units & Values

HS = .038804 BTU / FT²-SEC-°F

HYD-EVCS

PHASE CHANGE TEST

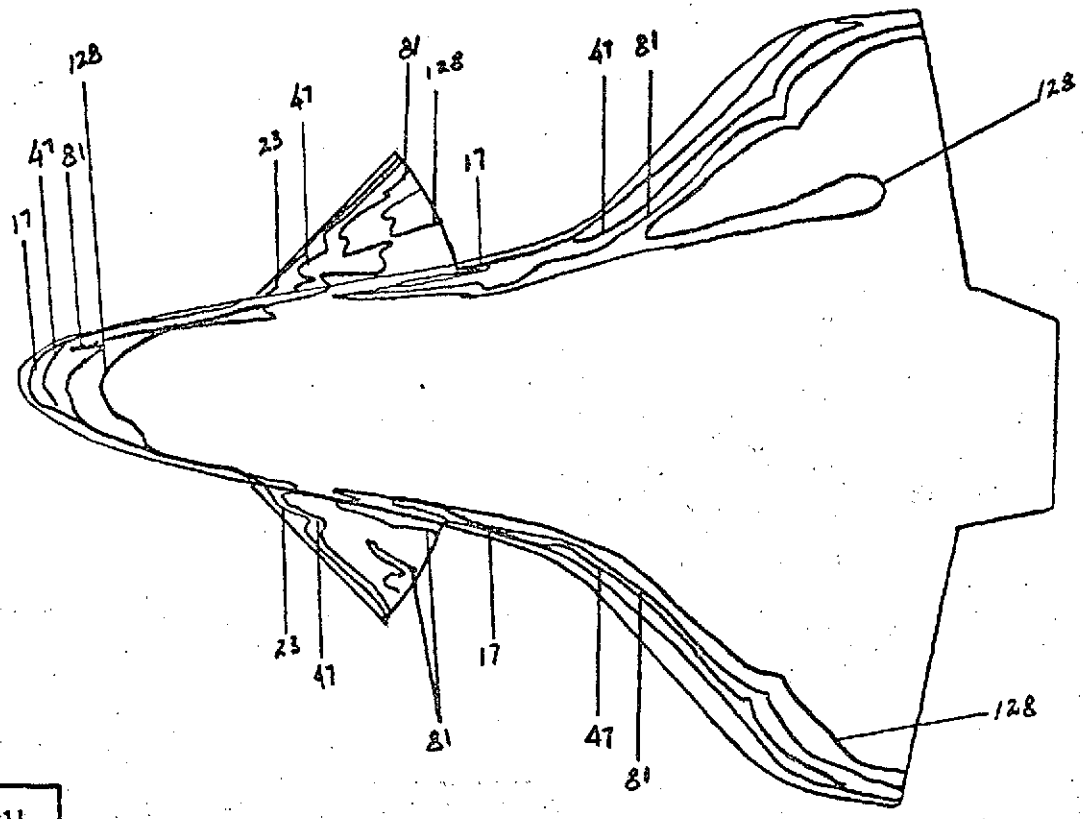

Isotherm	$h/h_{r=1'}$
17	.35319
23	.30365
47	.21241
81	.16180
128	.12871

FIG. 96

CONFIG. 46-6

LENGTH (ft) = .638

SCALE .00593

FACILITY LRC/UDT

TEST OH42C RPA

RUN 4287

M_∞ = 8.0

P_{total} (psig) = 152

T_{total} (°F) = 760

T_{aw}/T_{total} = .92

R_N per foot = 1×10^6

$T_{phase\ change}$ (°F) = 250

α = 350

β = 0

ϕ = 0

Camera Coordinates (from model center, x-axis parallel w/ stream, + downstream)

x (in) =

y (in) =

z (in) =

MODEL HITS ℄ AT 3 FRAMES

HS = .038592 $\frac{BTU}{FT^2\text{-}SEC\text{-}°F}$

NASA Langley (Feb. 1971)

HVD-EVCS

PHASE CHANGE TEST

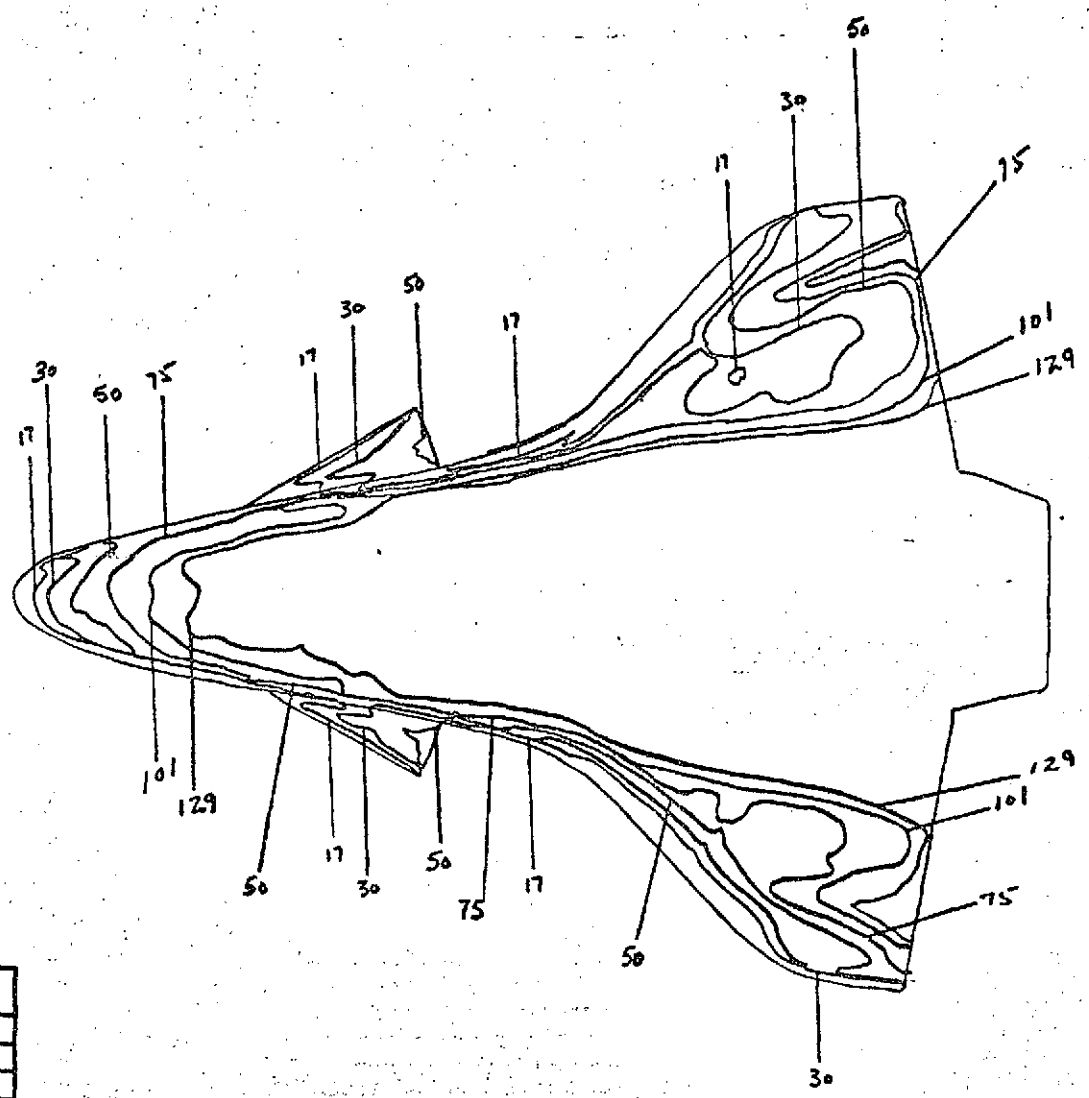

Isotherm	$h/h_{r=1}$
17	.30088
30	.22649
50	.17544
75	.14325
101	.12349
129	.10922

FIG. 97

CONFIG. 46-5

LENGTH (ft) = .638

SCALE .00593

FACILITY LRC/VDT

TEST OH42C RPA

RUN 4288

M_∞ = 8.0

P_{total} (psig) = 625

T_{total} (°F) = 875

T_{aw}/T_{total} = .92

R_N per foot = 3×10^6

$T_{phase\ change}$ (°F) = 350

α = 35°

β = 0

ϕ = 0

Camera Coordinates (from model center, x-axis parallel w/ stream, + downstream)

x (in) =

y (in) =

z (in) =

Model Hits @ 5 Frames

HS = .072236 $\frac{BTU}{FT^2\text{-}SEC\text{-}^\circ F}$

HVD-EVC

PHASE CHANGE TEST

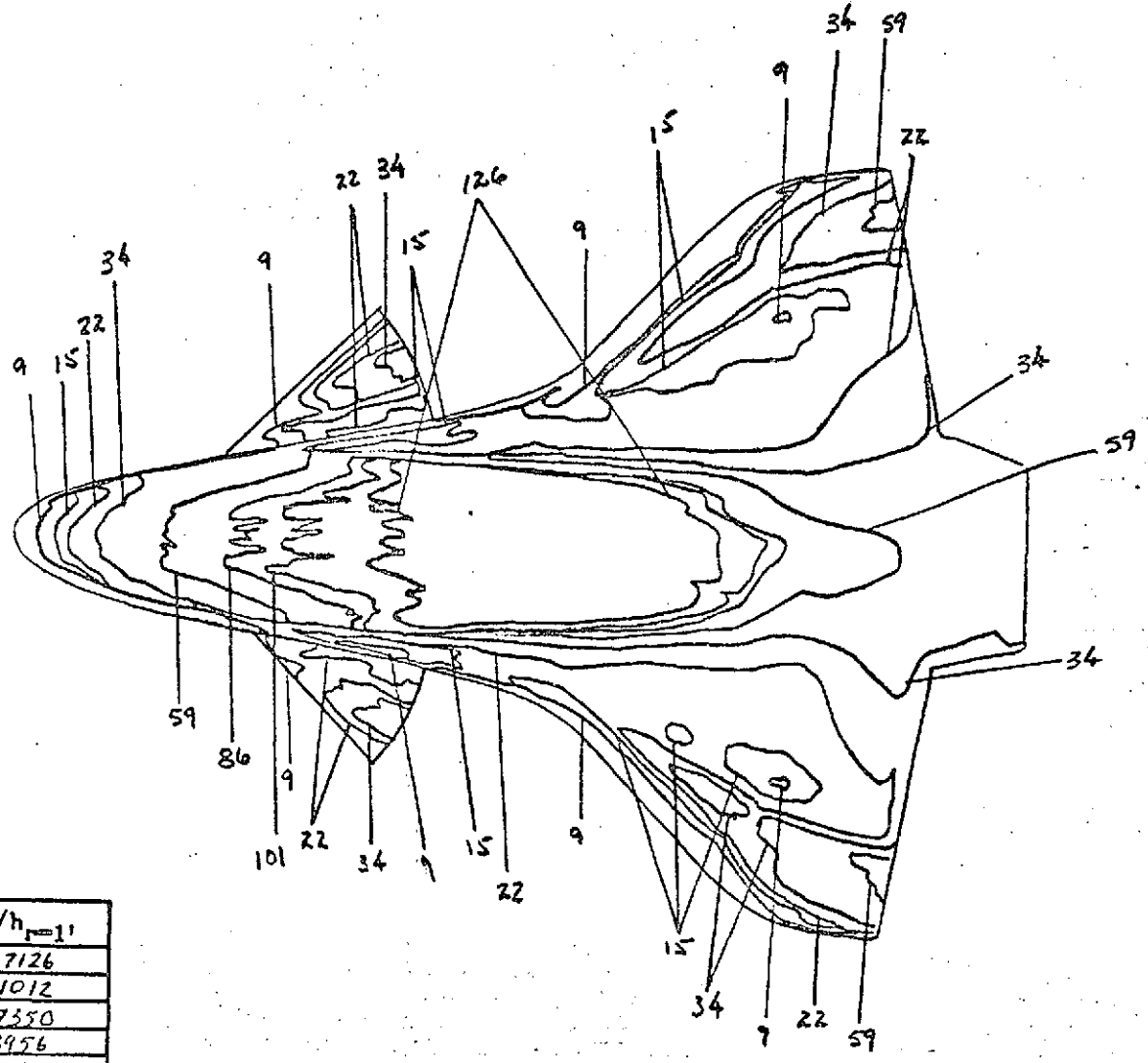

Isotherm	$h/h_{r=1'}$
9	.27126
15	.21012
22	.17350
34	.13956
59	.10545
86	.08775
101	.08980
126	.07250

FIG. 98

CONFIG. 46-6

LENGTH (ft) = .638

SCALE .00593

FACILITY LRC/VDT

TEST OH42C RPA

RUN 4289

M_∞ = 8.0

P_{total} (psig) = 640

T_{total} (°F) = 925

T_{aw}/T_{total} = .92

R_N per foot = 3×10^6

$T_{phase\ change}$ (°F) = 300

α = 35°

β = 0

ϕ = 0

Camera Coordinates (from model center, x-axis parallel w/ stream, + downstream)

x (in) =

y (in) =

z (in) =

MODEL Hits & @ 5 Frames

HS = .073365 $\frac{BTU}{FT^2\text{-}SEC\text{-}°F}$

NASA Langley (Feb. 1971)

HVD-EVCS

PHASE CHANGE TEST

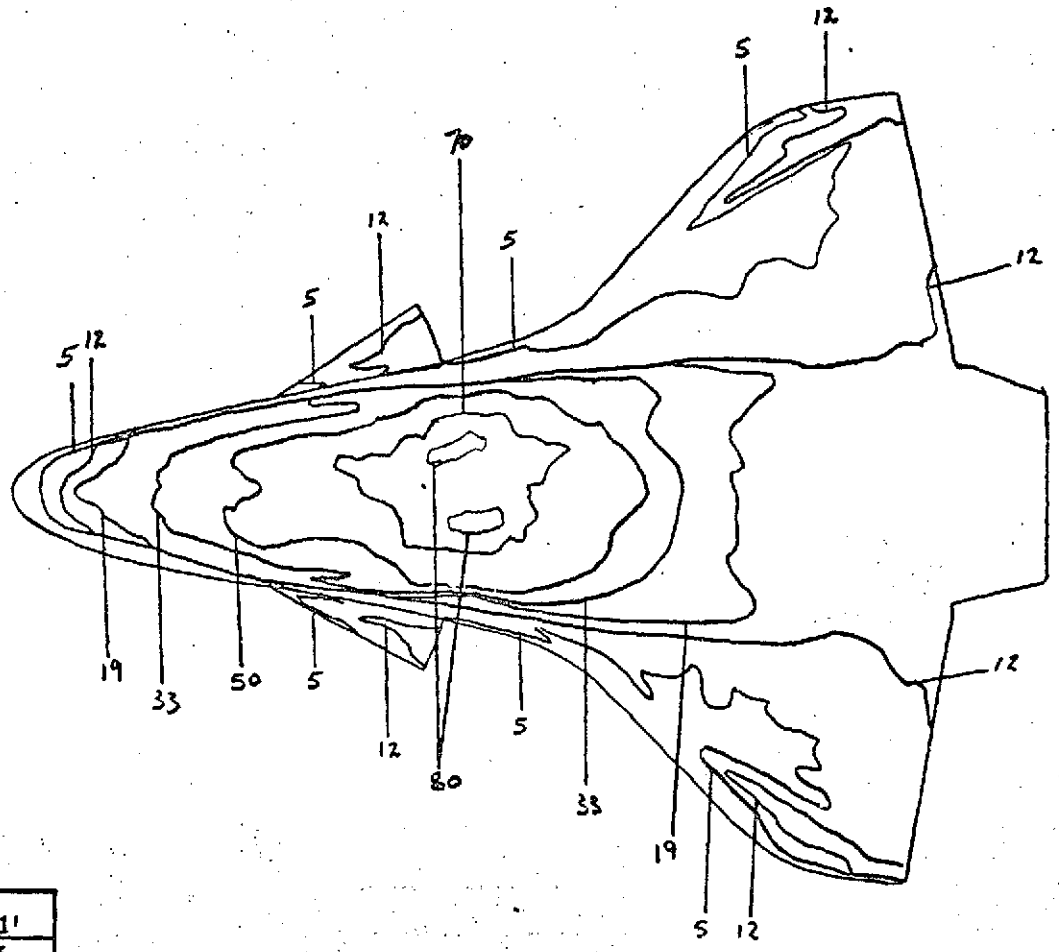

Isotherm	$h/h_{r=1'}$
5	.34073
12	.21994
19	.17479
33	.13263
50	.10775
70	.09107
80	.08518

FIG. 99

CONFIG. 46-5

LENGTH (ft) = .638

SCALE .00593

FACILITY LRC/UDT

TEST OH42C RPA

RUN 4292

M_∞ = 8.0

P_{total} (psig) = 1400

T_{total} (°F) = 925

T_{aw}/T_{total} = .92

R_N per foot = 6×10^6

$T_{phase\ change}$ (°F) = 350

α = 35°

β = 0

ϕ = 0

Camera Coordinates (from model center, x-axis parallel w/ stream, + downstream)

x (in) =

y (in) =

z (in) =

MODEL HITS ℄ AT STRAMES

$HS = .1049 \frac{BTU}{FT^2\text{-}SEC\text{-}°F}$

PHASE CHANGE TEST

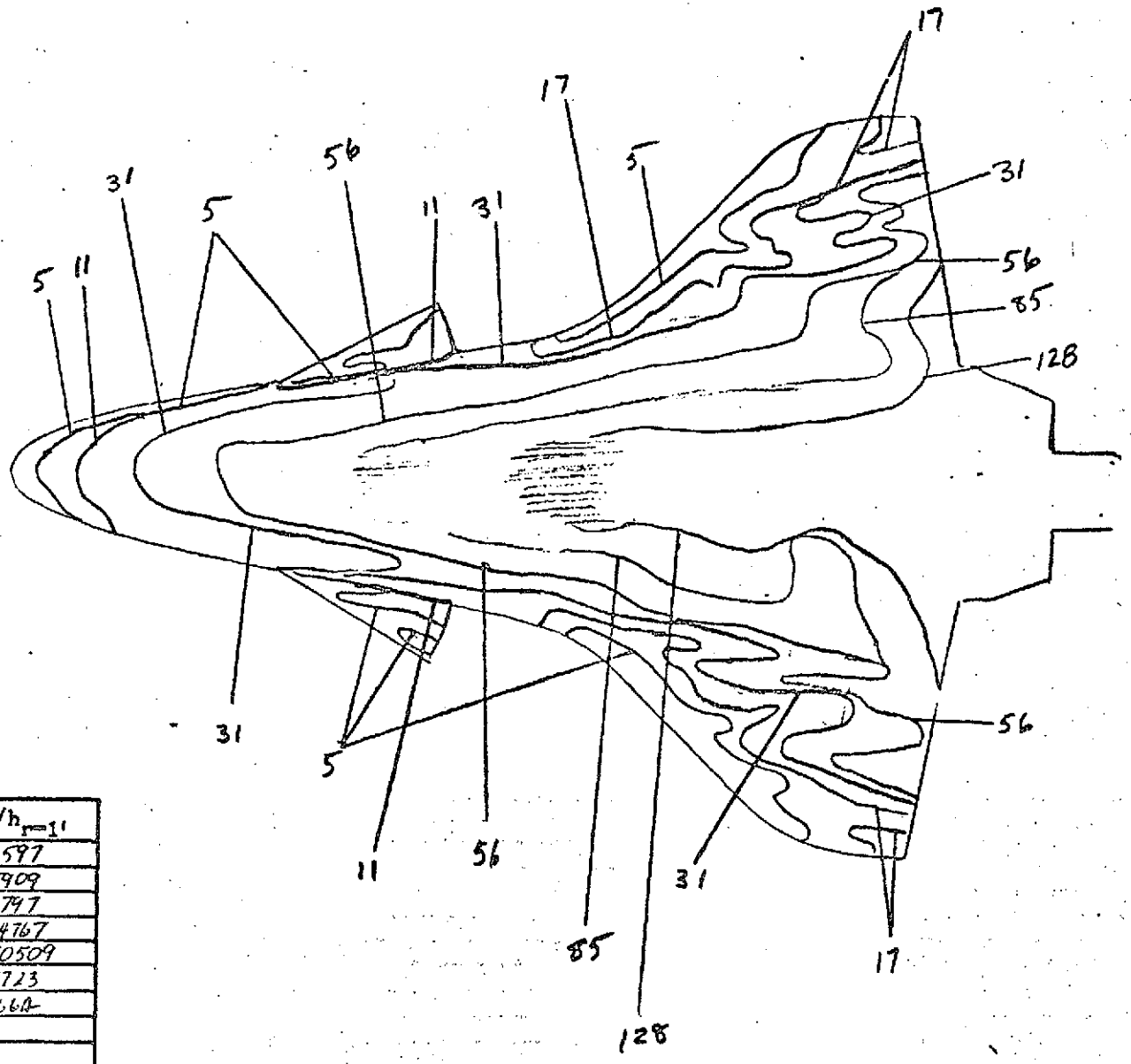

Isotherm	$h/h_{r=1'}$
5	.23597
11	.15909
17	.12797
31	.094767
56	.070509
85	.05723
128	.04664

FIG. 100

CONFIG. 46-5

LENGTH (ft) = .638

SCALE .00593

FACILITY LRC/UDT

TEST OH42C RPA

RUN 4293

M_∞ = 8

P_{total} (psi) = 160

T_{total} (°F) = 760

T_{aw}/T_{total} = .90

R_N per foot = 1×10^6

$T_{phase\ change}$ (°F) =

α = 25°

β = 0

ϕ = 0

Camera Coordinates (from model center, x-axis parallel w/ stream, + downstream)

x (in) =

y (in) =

z (in) =

$\mathcal{L}$ = FRAME 5

WHD

HS = .039511 $\frac{BTU}{FT^2\text{-}SEC\text{-}°F}$ HVD-EVCS

NASA Langley (Feb. 1971)

PHASE CHANGE TEST

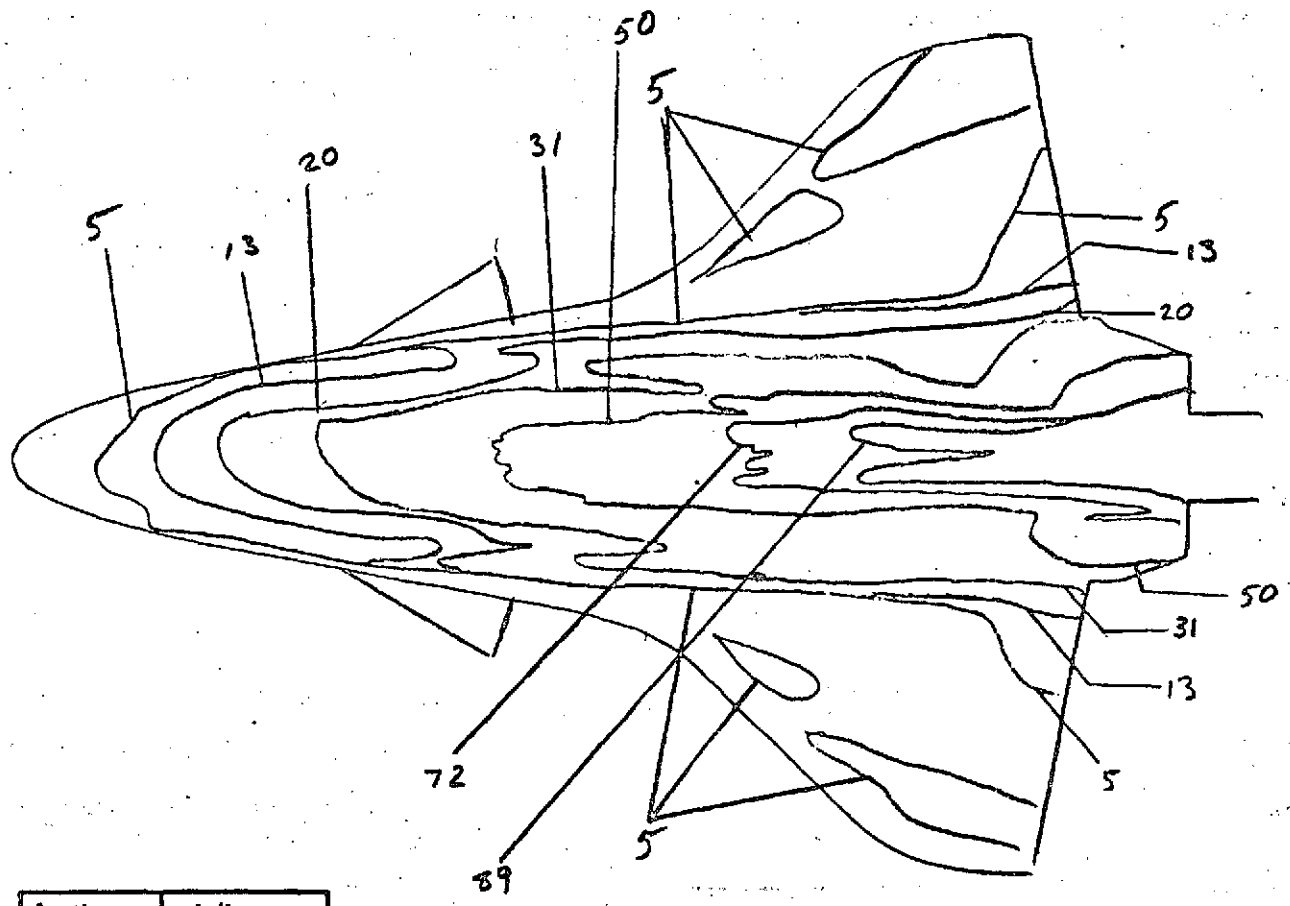

Isotherm	$h/h_{r=1'}$
5	.17844
13	.11016
20	.08922
31	.07166
50	.056427
72	.04702
89	.04229

FIG. 101

CONFIG. 46-5

LENGTH (ft) = .638

SCALE .00593

FACILITY LRC/VDT

TEST OH42C RPA

RUN 4294

M_∞ = 8

P_{total} (psi_g) = 630

T_{total} (°F) = 895

T_{aw}/T_{total} = .90

R_N per foot = 3×10^6

$T_{phase\ change}$ (°F) =

α = 25°

β = 0

ϕ = 0

Camera Coordinates (from model center, x-axis parallel w/ stream, + downstream)

x (in) =

y (in) =

z (in) =

H_S = .072839 $\frac{BTU}{FT^2\text{-}SEC\text{-}°F}$

PHASE CHANGE TEST

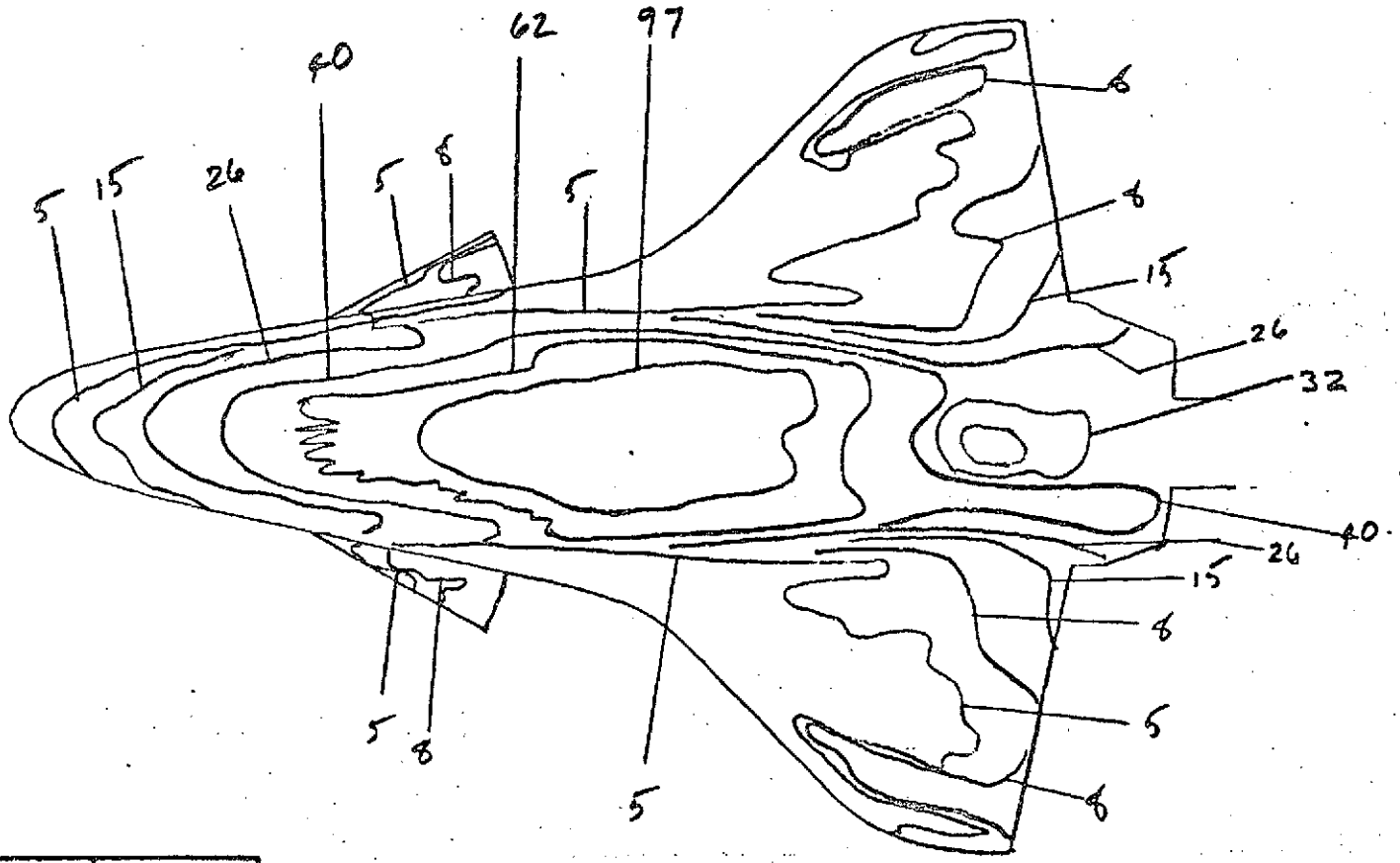

Isotherm	$h/h_{r=1}$
5	.27107
8	.21430
15	.15650
26	.11687
32	.10715
40	.09584
62	.07698
97	.06158

F16.102

CONFIG. 46-5

LENGTH (ft) = .638

SCALE .00593

FACILITY LRC/UDT

TEST OH42C RPA

RUN 4295

M_∞ = 8

P_{total} (psi) = 1390

T_{total} (°F) = 920

T_{aw}/T_{total} = .90

R_N per foot = 6×10^6

$T_{phase\ change}$ (°F) =

$\alpha = 25°$

$\beta = 0$

$\phi = 0$

Camera Coordinates (from model center, x-axis parallel w/ stream, + downstream)

x (in) =

y (in) =

z (in) =

FRAME 5 = ℄

WHD

$HS = .10466 \frac{BTU}{FT^2 - SEC - °F}$

HVD-EVCB

PHASE CHANGE TEST

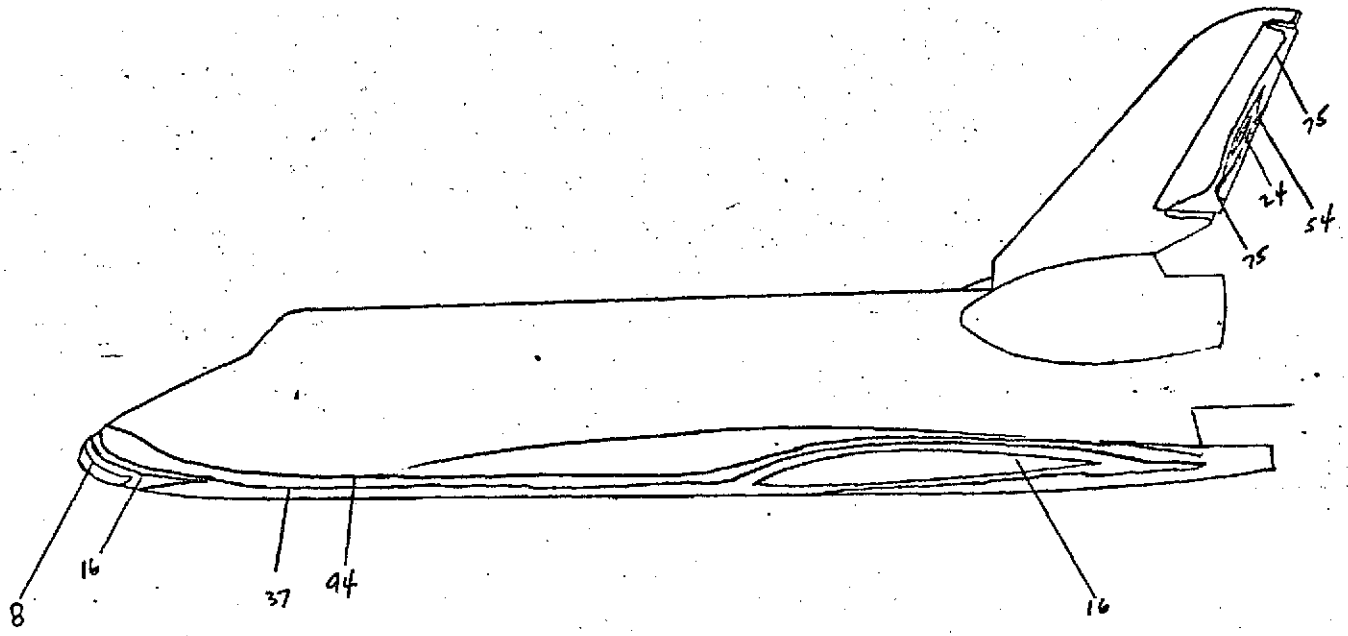

Isotherm	$h/h_{r=1'}$
8	.30306
16	.21429
24	.17497
37	.14098
54	.11665
75	.09898
94	.08941

FIG. 103

CONFIG. 46-4

LENGTH (ft) = .638

SCALE .00593

FACILITY LRC/VDT

TEST OH42A (RPA)

RUN 4084

M_∞ = 8

P_{total} (psi) = 620

T_{total} (°F) = 900

T_{aw}/T_{total} =

R_N per foot = 3×10^6

$T_{phase\ change}$ (°F) = 300

α = 30

β = 0

ϕ = 0

Camera Coordinates (from model center, x-axis parallel w/ stream, + downstream)

x (in) =

y (in) =

z (in) =

HVD-EVCS

PHASE CHANGE TEST

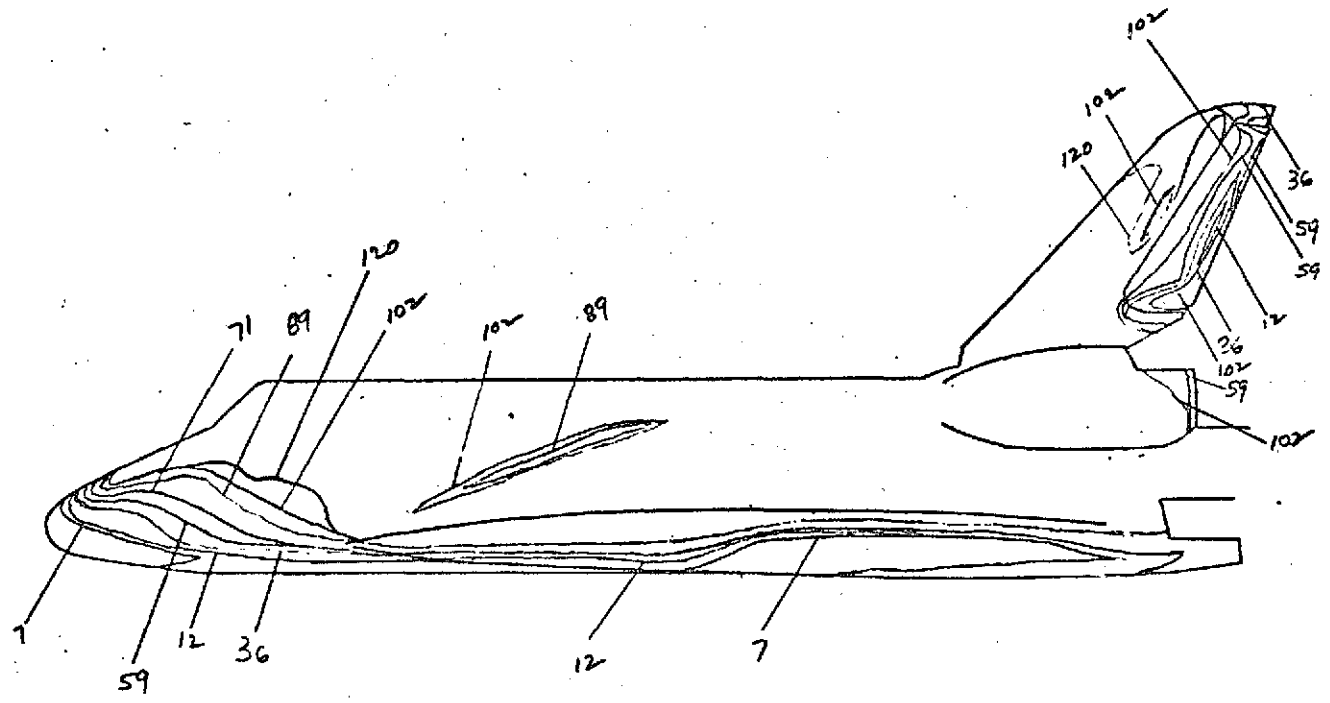

Isotherm	$h/h_{r=1'}$
7	.15712
12	.11382
36	.06664
59	.05205
71	.04765
89	.04238
102	.03954
120	.03647

FIG. 104

CONFIG. 46-4

LENGTH (ft) = .638

SCALE .00593

FACILITY LRC/VDT

TEST OH42A (RPA)

RUN 4085

$M_\infty = 8$

P_{total} (psi) = 630

T_{total} (°F) = 880

T_{aw}/T_{total} = .90

R_N per foot = 3×10^6

$T_{phase\ change}$ (°F) = 200

α = 30

β = 0

ϕ = 0

Camera Coordinates (from model center, x-axis parallel w/ stream, + downstream)

x (in) =

y (in) =

z (in) =

H_S = .072288 $\frac{BTU}{FT^3 SEC^\circ F}$

PHASE CHANGE TEST

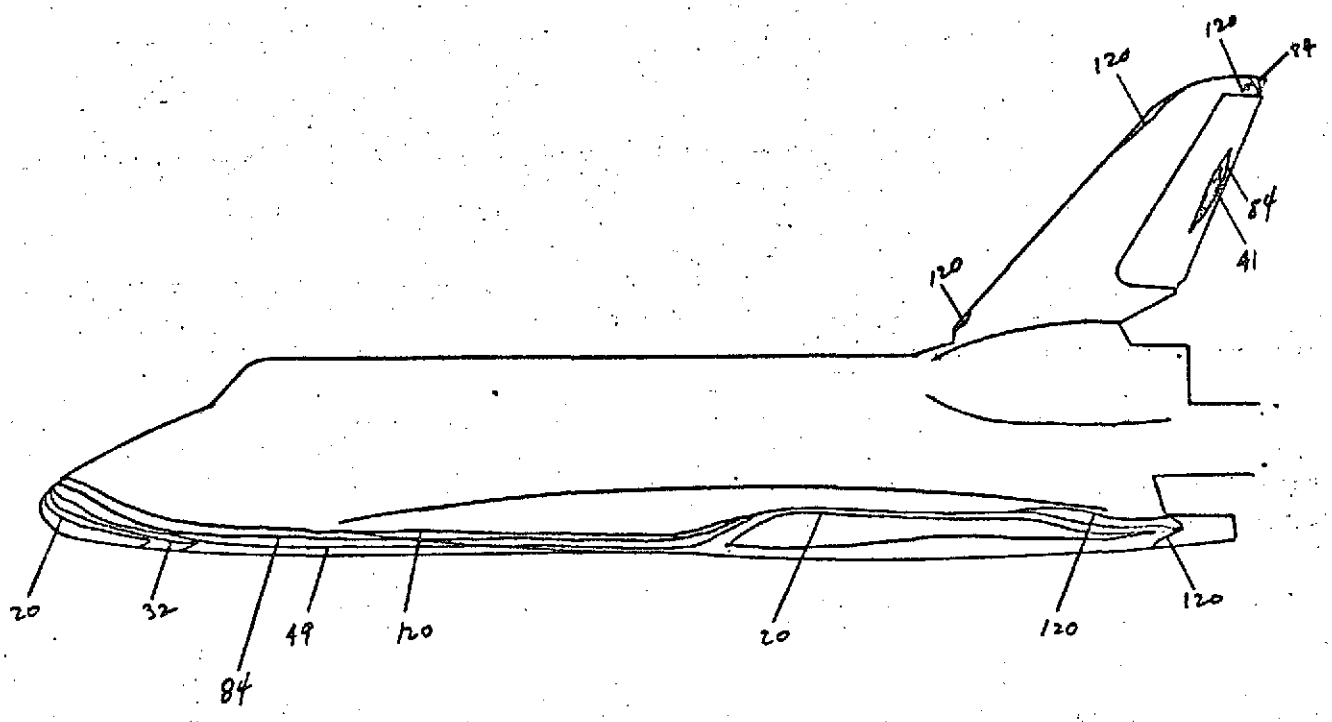

Isotherm	$h/h_{r=1'}$
20	.221056
32	.17476
41	.15439
49	.141228
84	.107865
120	.09025

FIG. 105

CONFIG. 46-4

LENGTH (ft) = .638

SCALE .00593

FACILITY LRC/UDT

TEST OH42A (RPA)

RUN 4086

M_∞ = 8

P_{total} (psi) = 1400

T_{total} (°F) = 925

T_{aw}/T_{total} = .90

R_N per foot = 6×10^6

$T_{phase\ change}$ (°F) = 400

α = 30

β = 0

ϕ = 0

Camera Coordinates (from model center, x-axis parallel w/ stream, + downstream)

x (in) =

y (in) =

z (in) =

K_S = .104839 $\frac{BTU}{Ft^2\text{-}sec\text{-}°F}$

PHASE CHANGE TEST

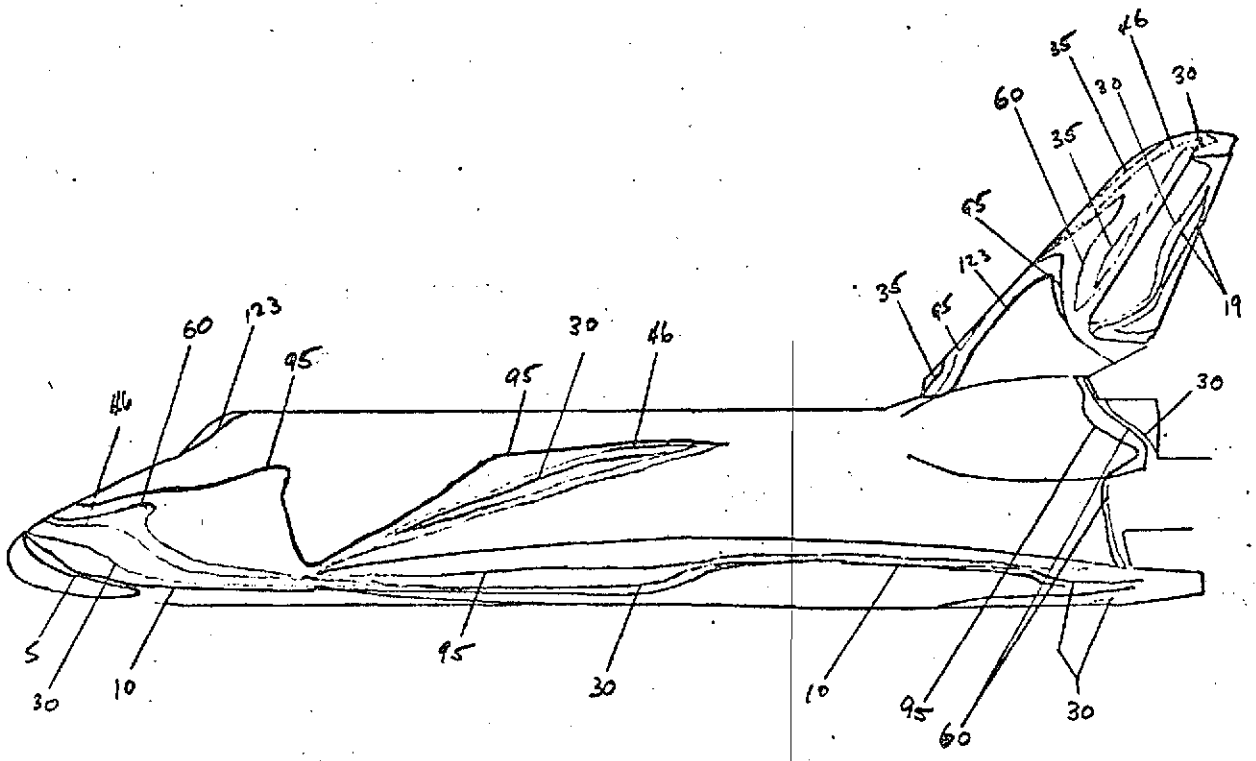

Isotherm	$h/h_{r=1}$
5	.17783
10	.12575
19	.07123
30	.07260
35	.06728
46	.05663
60	.05134
95	.04050
123	.03585

FIG. 106

CONFIG. 46-4

LENGTH (ft) = .638

SCALE .00593

FACILITY LRC/UDT

TEST OH42A (RPA)

RUN 4087

M_∞ = 8

P_{total} (psi) = 1400

T_{total} (°F) = 925

T_{aw}/T_{total} =

R_N per foot = 6×10^6

$T_{phase\ change}$ (°F) = 250

α = 30

β = 0

ϕ = 0

Camera Coordinates (from model center, x-axis parallel w/ stream, + downstream)

x (in) =

y (in) =

z (in) =

$HS = .104751 \frac{BTU}{FT^2\text{-}SEC\text{-}^\circ F}$

PHASE CHANGE TEST

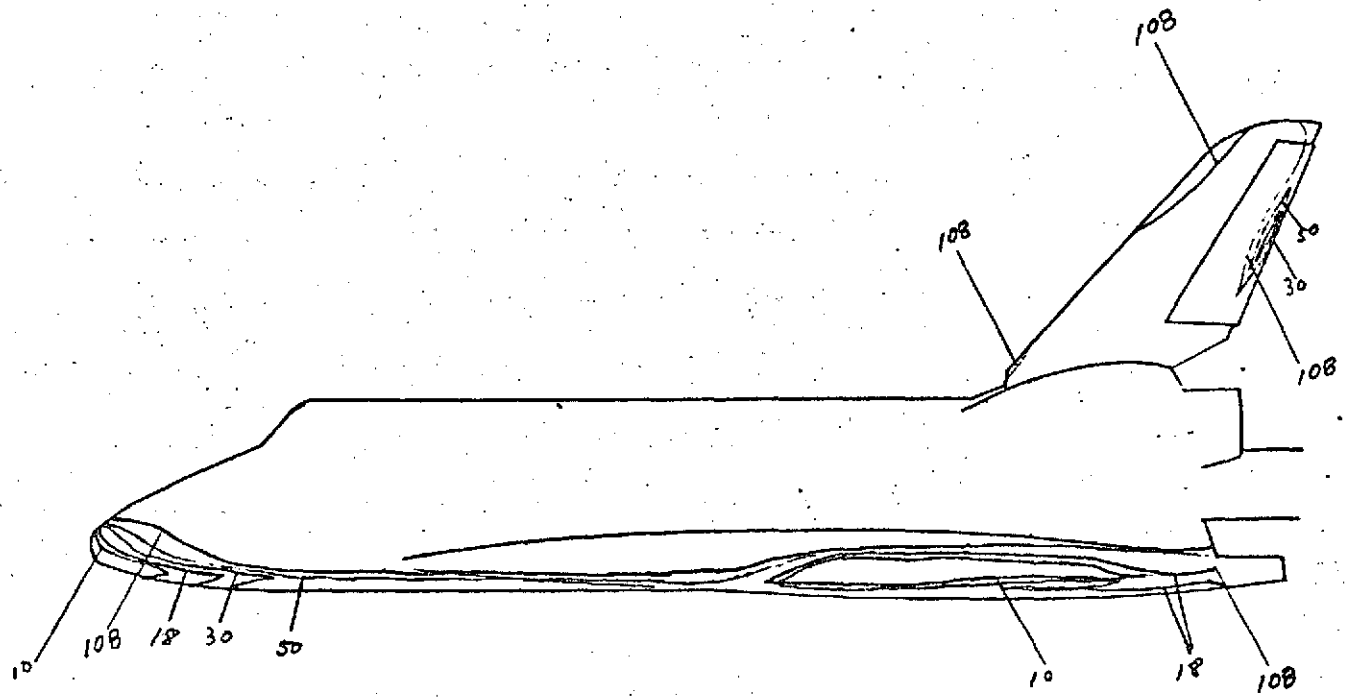

Isotherm	$h/h_{n=1}$
10	.26328
18	.19624
30	.15201
50	.11174
108	.08011

FIG. 107

CONFIG. 46-4

LENGTH (ft) = .638

SCALE .00593

FACILITY LRC/UDT

TEST OH42A (RPA)

RUN 4033

M_∞ = 8

P_{total} (psi) = 1935

T_{total} (°F) = 935

T_{aw}/T_{total} = .90

R_N per foot = 8×10^6

$T_{phase\ change}$ (°F) = 400

α = 30

β = 0

ϕ = 0

Camera Coordinates (from model center, x-axis parallel w/ stream, + downstream)

x (in) =

y (in) =

z (in) =

HS = .12190 $\frac{BTU}{FT^2 \cdot SEC \cdot °F}$

PHASE CHANGE TEST

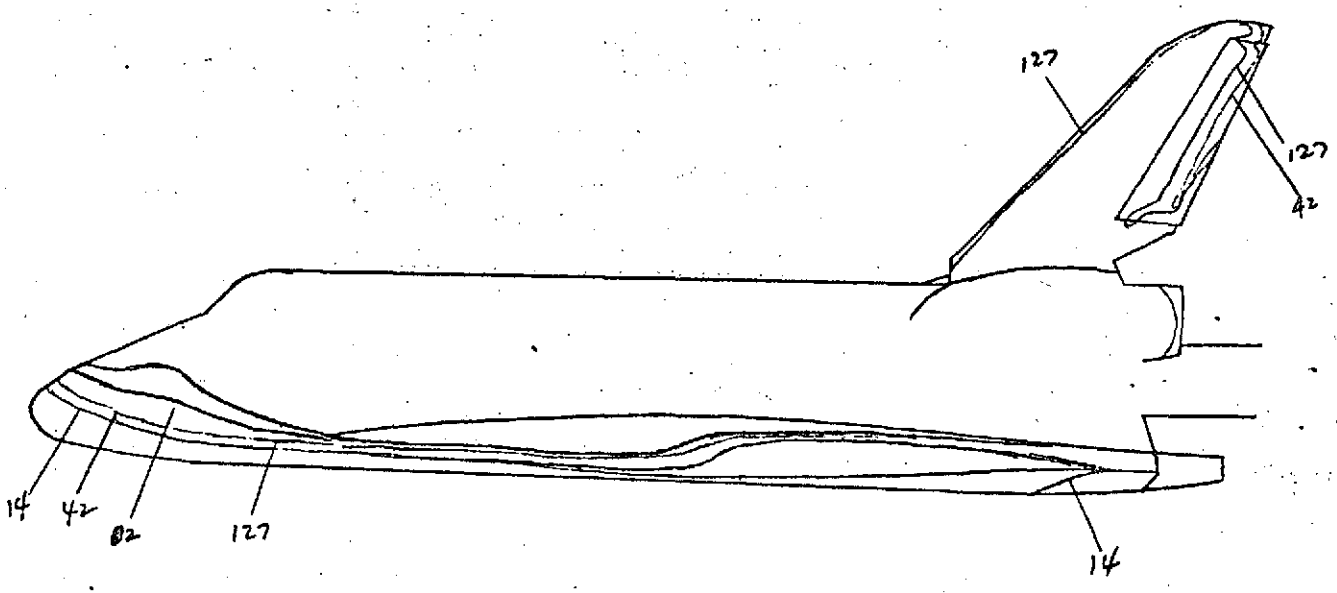

Isotherm	$h/h_{r=1}$
14	.12407
42	.07163
82	.05126
127	.04119

FIG. 108

CONFIG. 46-4

LENGTH (ft) = .638

SCALE .00593

FACILITY LRC/VDT

TEST OH42A (RPA)

RUN 4089

M_∞ = 8

P_{total} (psi) = 163

T_{total} (°F) = 750

T_{aw}/T_{total} = .90

R_N per foot = 1×10^6

$T_{phase\ change}$ (°F) = 150

α = 30

β = 0

ϕ = 0

Camera Coordinates (from model center, x-axis parallel w/ stream, + downstream)

x (in) =

y (in) =

z (in) =

HS = .03938 $\frac{BTU}{Ft^2\text{-}SEC\text{-}^oF}$

PHASE CHANGE TEST

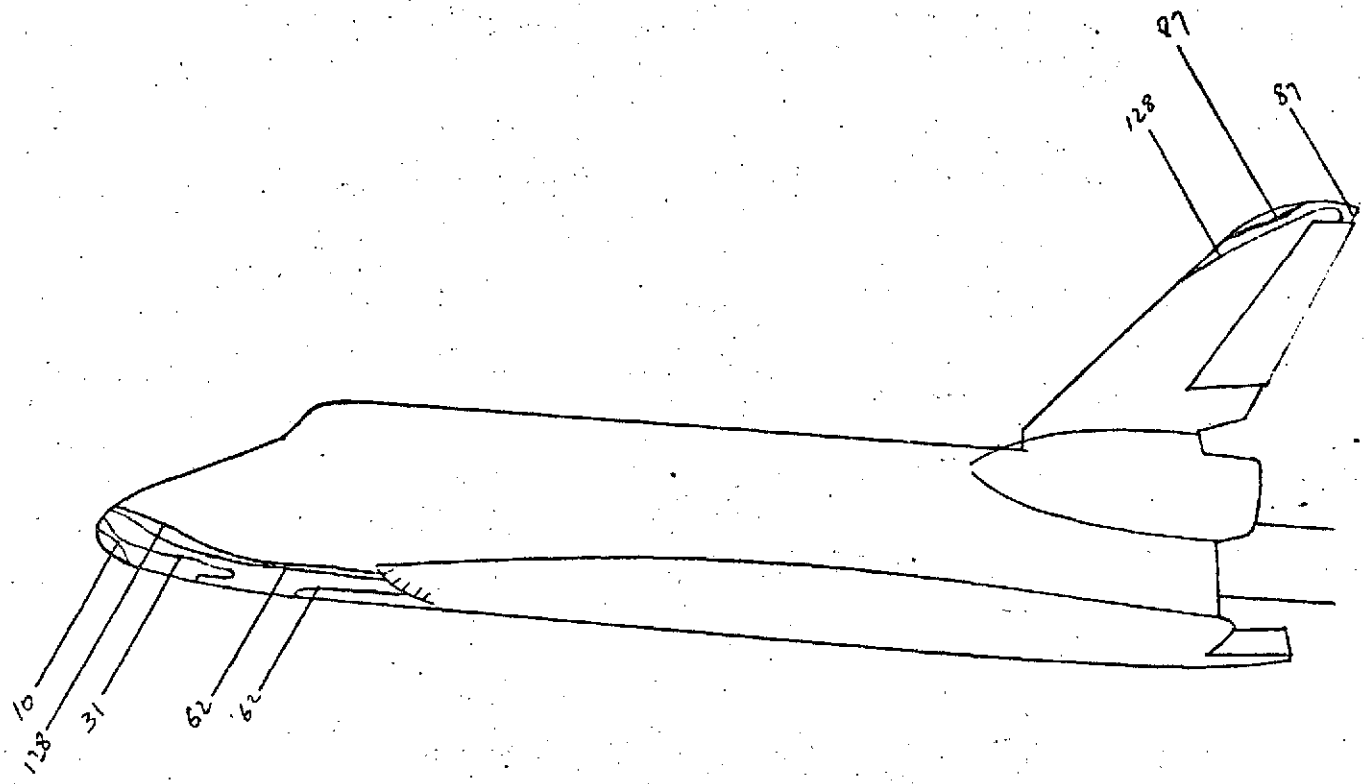

!sotherm	$h/h_{r=1}$
10	.31025
31	.17621
62	.12460
87	.10519
128	.08619

FIG. 109

CONFIG. 46-4

LENGTH (ft) = .638

SCALE .00593

FACILITY LRC/UDT

TEST OH42A (RPA)

RUN 4091

M_∞ = 8

P_{total} (psi) = 1390

T_{total} (°F) = 930

T_{aw}/T_{total} = .90

R_N per foot = 6×10^6

$T_{phase\ change}$ (°F) = 400

α = 40

β = 0

ϕ = 0

Camera Coordinates (from model center, x-axis parallel w/ stream, + downstream)

x (in) =

y (in) =

z (in) =

HS = .10453 $\frac{BTU}{FT^2\text{-}SEC\text{-}^\circ R}$

PHASE CHANGE TEST

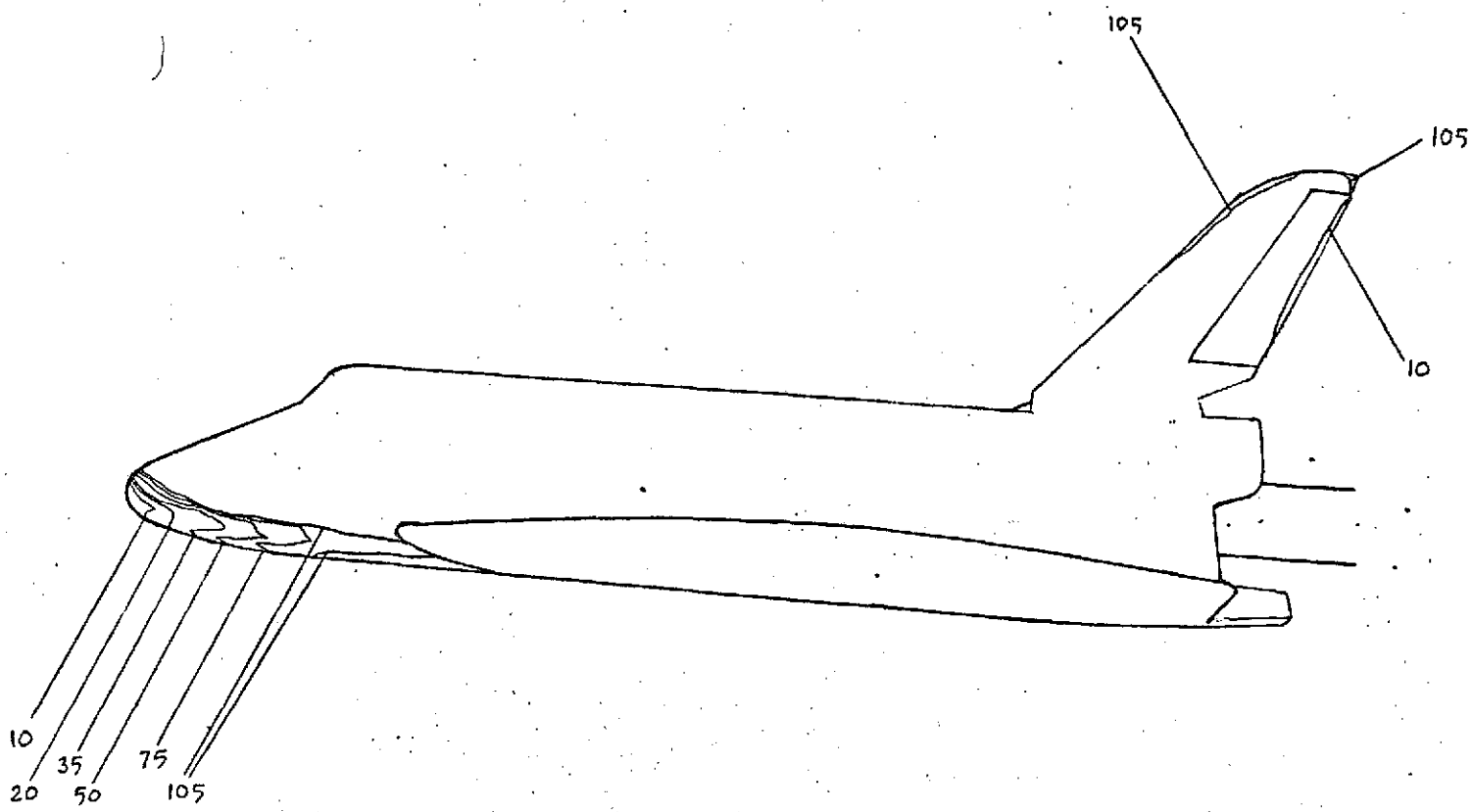

Isotherm	$h/h_{r=1'}$
10	.50592
20	.35774
35	.27092
50	.22625
75	.18474
105	.15613

FIG. 110

CONFIG. 46-4

LENGTH (ft) = .638

SCALE .00593

FACILITY LRC/VDT

TEST OH42A (RPA)

RUN 4092

M_∞ = 8

P_{total} (psi) = 1400

T_{total} (°F) = 940

T_{aw}/T_{total} = .90

R_N per foot = 6×10^6

$T_{phase\ change}$ (°F) = 500

α = 40

β = 0

ϕ = 0

Camera Coordinates (from model center, x-axis parallel w/ stream, + downstream)

x (in) =

y (in) =

z (in) =

HS = .10477 $\frac{BTU}{FT^2\ SEC\ °F}$

PHASE CHANGE TEST

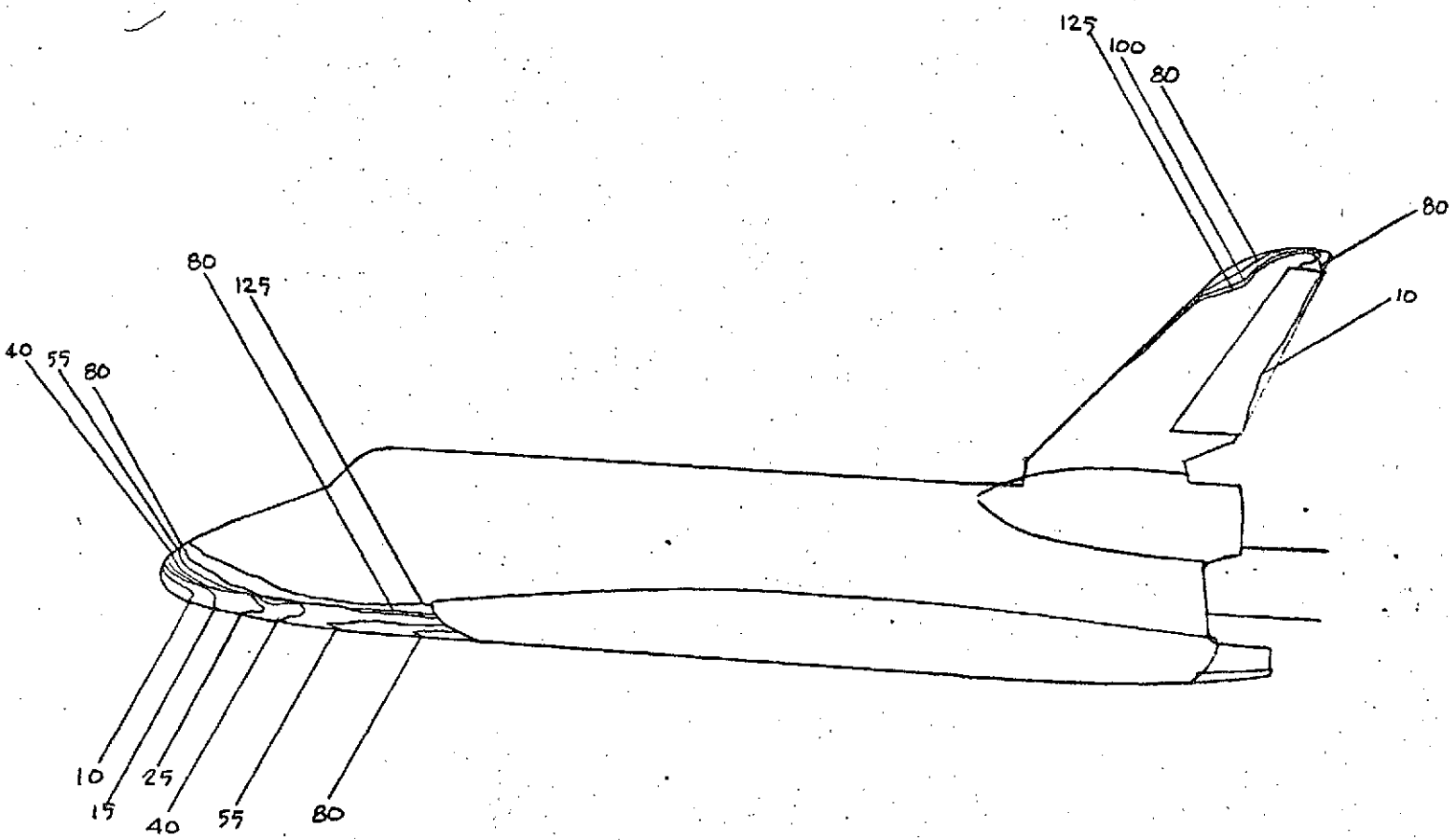

Isotherm	$h/h_{r=1'}$
10	.28650
15	.23393
25	.18120
40	.14325
55	.12217
80	.10129
100	.09060
125	.08104

FIG. 111

CONFIG. 46-4

LENGTH (ft) = .638

SCALE .00593

FACILITY LRC/VDT

TEST OH42A (RPA)

RUN 4093

M_∞ = 8

P_{total} (psi) = 150

T_{total} (°F) = 760

T_{aw}/T_{total} = .90

R_N per foot = 1×10^6

$T_{phase\ change}$ (°F) = 200

α = 40

β = 0

ϕ = 0

Camera Coordinates (from model center, x-axis parallel w/ stream, + downstream)

x (in) =

y (in) =

z (in) =

K_S = .038176 $\frac{BTU}{FT^2\text{-}SEC\text{-}^\circ F}$

PHASE CHANGE TEST

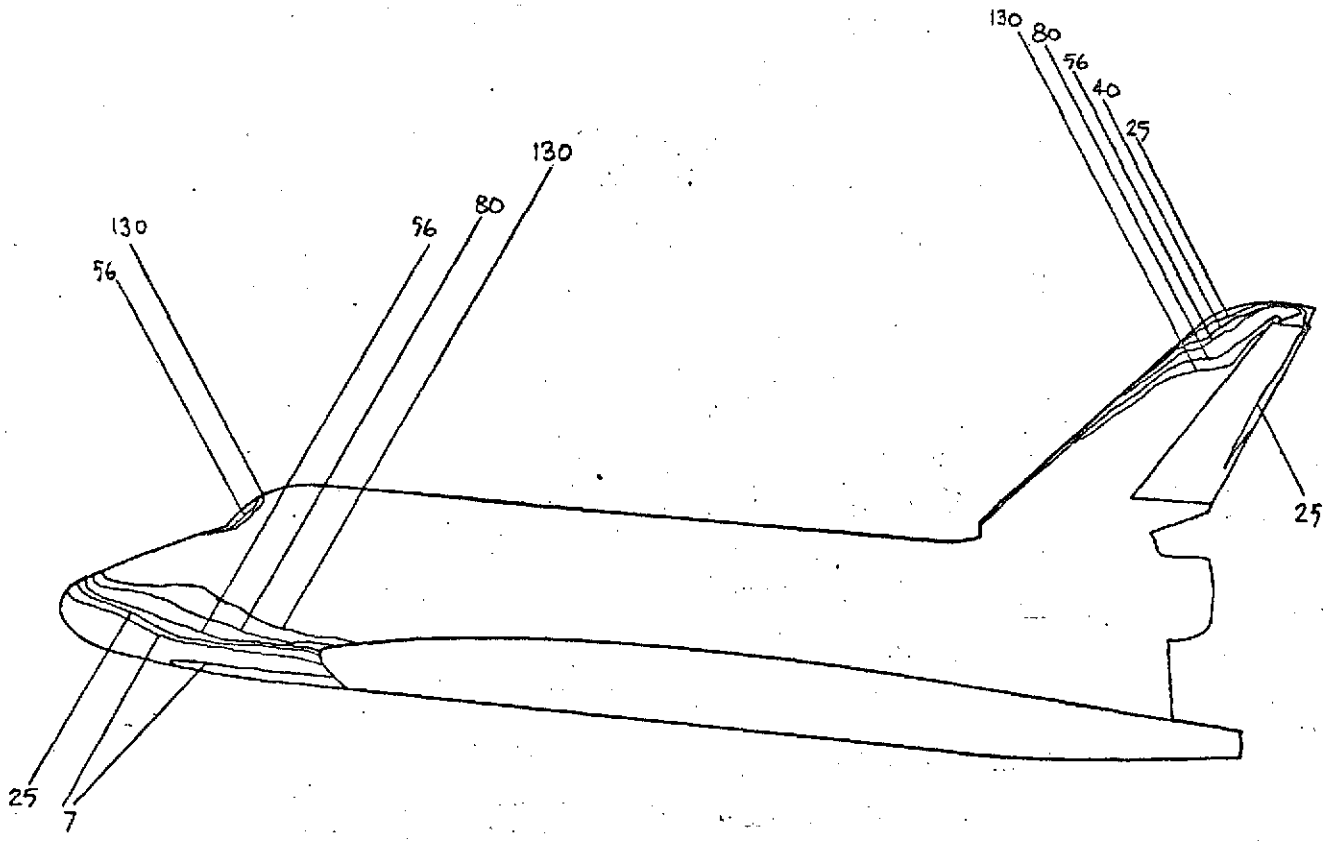

Isotherm	$h/h_{r=1'}$
7	.16815
25	.08898
40	.07034
56	.05945
80	.04974
130	.03902

FIG. 112

CONFIG. 46-4

LENGTH (ft) = .638

SCALE .00593

FACILITY LRC/UDT

TEST OH42A (RPA)

RUN 4094

M_∞ = 8

P_{total} (psi) = 160

T_{total} (°F) = 800

T_{aw}/T_{total} = .90

R_N per foot = 1×10^6

$T_{phase\ change}$ (°F) = 150

α = 40

β = 0

ϕ = 0

Camera Coordinates (from model center, x-axis parallel w/ stream, + downstream)

x (in) =

y (in) =

z (in) =

H_S = .03924 $\frac{BTU}{FT^2 - SEC - °F}$

HVD-EVCS

PHASE CHANGE TEST

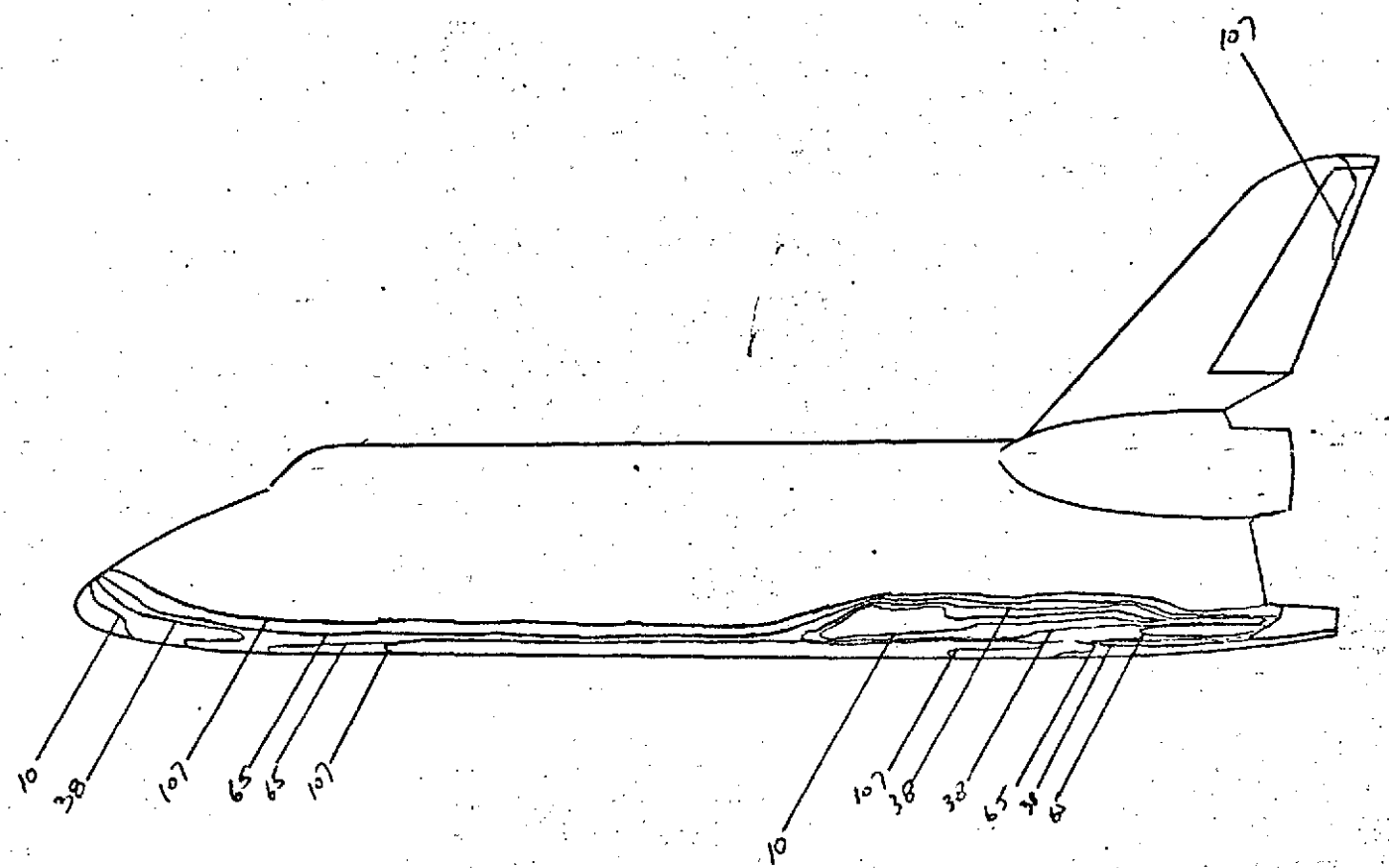

Isotherm	$h/h_{r=1}$
10	.33132
38	.14996
65	.12996
107	.10129

FIG. 113

CONFIG. 46-4

LENGTH (ft) = .638

SCALE .00593

FACILITY LRC/VDT

TEST OH42A (RPA)

RUN 4096

M_∞ = 8

P_{total} (psi) = 1395

T_{total} (°F) = 900

T_{aw}/T_{total} = .90

R_N per foot = 6×10^6

$T_{phase\ change}$ (°F) = 400

α = 25

β = 0

ϕ = 0

Camera Coordinates (from model center, x-axis parallel w/ stream, + downstream)

x (in) =

y (in) =

z (in) =

$HS = .104472 \frac{BTU}{FT^2\text{-}SEC\text{-}°F}$

HVD-EVCS

PHASE CHANGE TEST

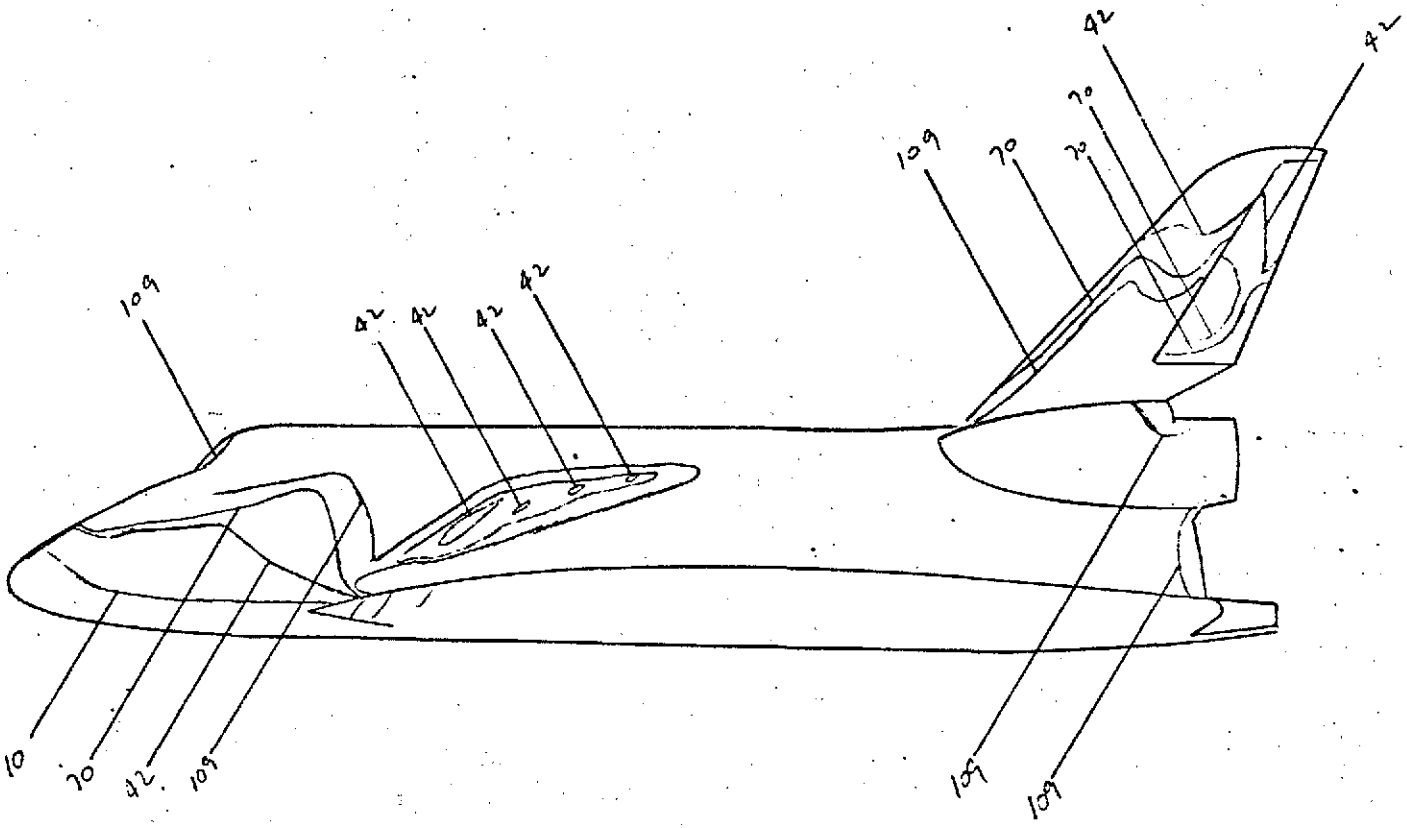

Isotherm	$h/h_{r=1'}$
10	.08069
42	.03937
70	.03050
109	.02444

FIG. 114

CONFIG. 46-4

LENGTH (ft) = .638

SCALE .00593

FACILITY LRC/UDT

TEST OH42A (RPA)

RUN 4097

M_∞ = 8

P_{total} (psi) = 1385

T_{total} (°F) = 925

T_{aw}/T_{total} = .90

R_N per foot = 6×10^6

$T_{phase\ change}$ (°F) = 200

α =

β = 0

ϕ = 0

Camera Coordinates (from model center, x-axis parallel w/ stream, + downstream)

x (in) =

y (in) =

z (in) =

$HS = .10408 \frac{BTU}{FT^2 \cdot SEC \cdot °F}$

PHASE CHANGE TEST

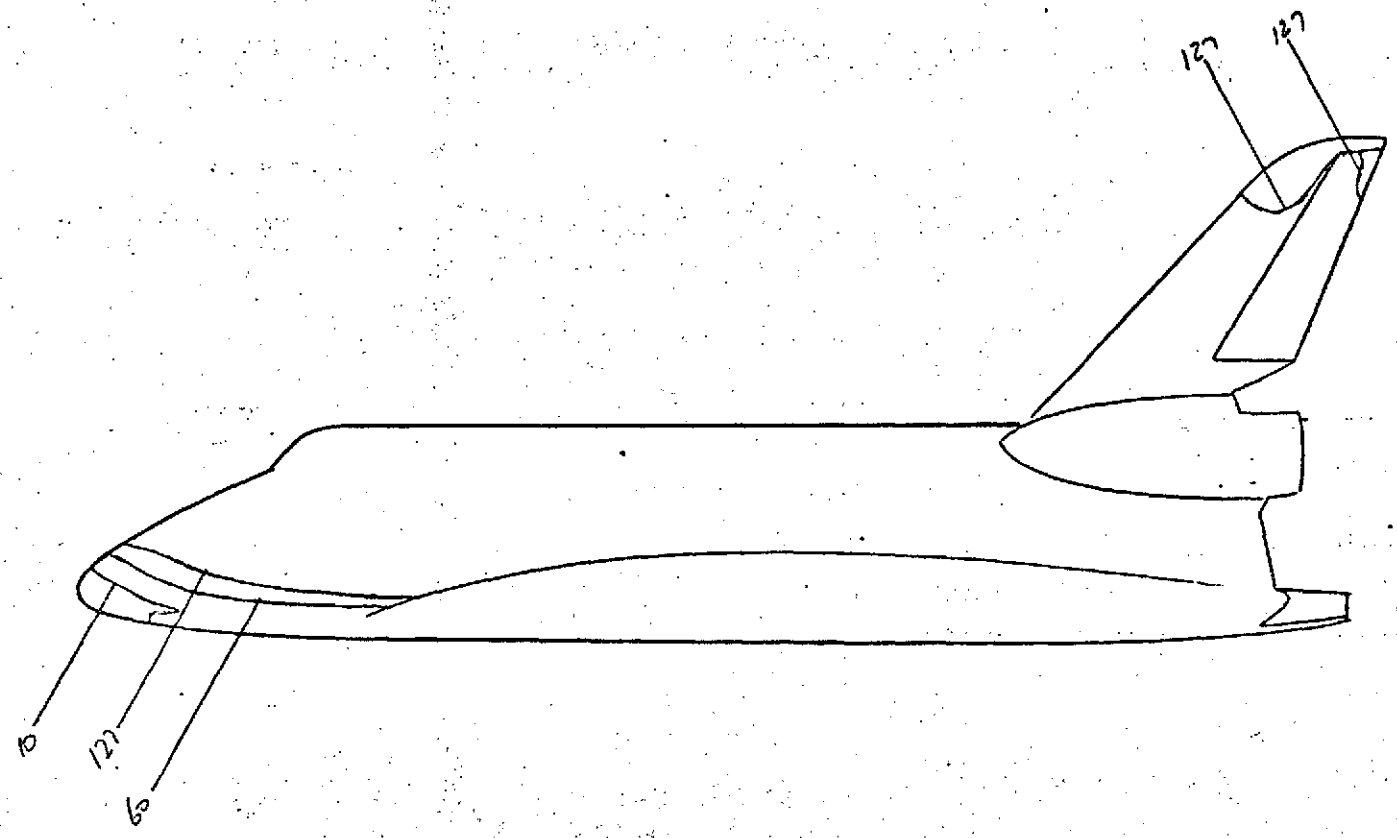

Isotherm	$h/h_{r=1}$
10	.21700
60	.08854
127	.04089

FIG. 115

CONFIG. 46-4

LENGTH (ft) =	.638
SCALE	.00593
FACILITY	LRC/UDT
TEST	OH42A (RPA)
RUN	4098
M_∞ =	8
P_{total} (psi) =	160
T_{total} (°F) =	760
T_{aw}/T_{total} =	.90
R_N per foot =	1×10^6
$T_{phase\ change}$ (°F) =	175
α =	35
β =	0
ϕ =	0

Camera Coordinates (from model center, x-axis parallel w/ stream, + downstream)

x (in) =

y (in) =

z (in) =

$HS = .039169 \frac{BTU}{FT^2\text{-}SEC\text{-}^\circ F}$

NVD-5YC9

PHASE CHANGE TEST

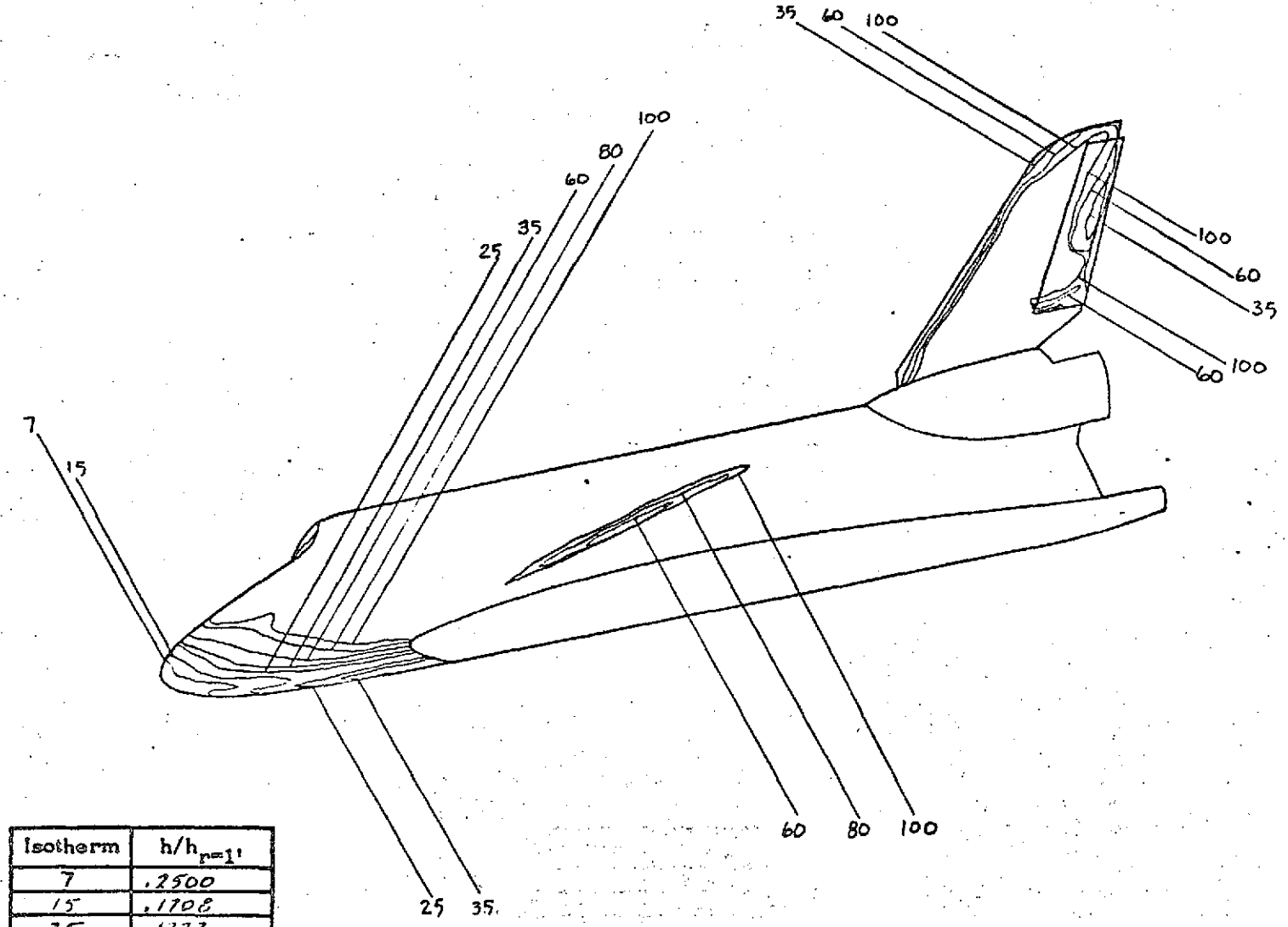

Isotherm	$h/h_{r=1'}$
7	.2500
15	.1708
25	.1323
35	.1179
60	.0854
80	.0739
100	.06614

FIG. 116

CONFIG. 46-4

LENGTH (ft) = .638

SCALE .00593

FACILITY LRC/UDT

TEST OH42A (RPA)

RUN 4100

M_∞ = 8

P_{total} (psi) = 1420

T_{total} (°F) = 985

T_{aw}/T_{total} = .90

R_N per foot = 6×10^6

$T_{phase\ change}$ (°F) = 350

α = 25

β = 0

ϕ = 0

Camera Coordinates (from model center, x-axis parallel w/ stream, + downstream)

x (in) =

y (in) =

z (in) =

HS: .1060 $\frac{BTU}{FT^2\text{-}SEC\text{-}^\circ F}$

PHASE CHANGE TEST

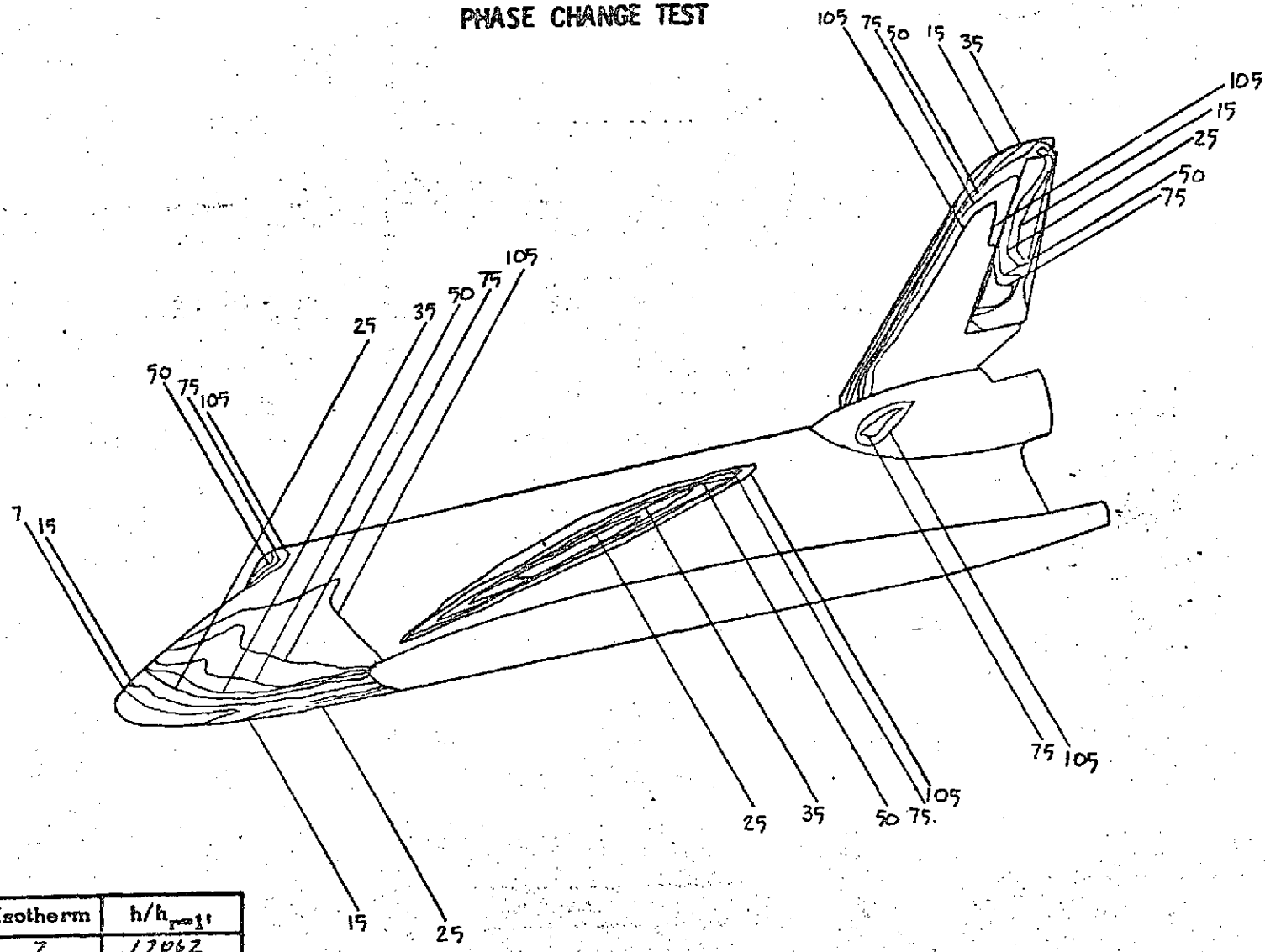

Isotherm	$h/h_{T=1}$
7	.17062
15	.11656
25	.09029
35	.07630
50	.06384
75	.05213
105	.04405

FIG 117

CONFIG. 46-4

LENGTH (ft) = .638

SCALE .00593

FACILITY LRC/UDT

TEST OH42A (RPA)

RUN 4101

M_∞ = 8

P_{total} (psi) = 1375

T_{total} (°F) = 950

T_{aw}/T_{total} = .90

R_N per foot = 6×10^6

$T_{phase\ change}$ (°F) =

α = 25

β = 0

ϕ = 0

Camera Coordinates (from model center, x-axis parallel w/ stream, + downstream)

x (in) =

y (in) =

z (in) =

HS = .10915 $\frac{BTU}{FT^2\text{-}SEC\text{-}^\circ F}$

EVD-EVCS

PHASE CHANGE TEST

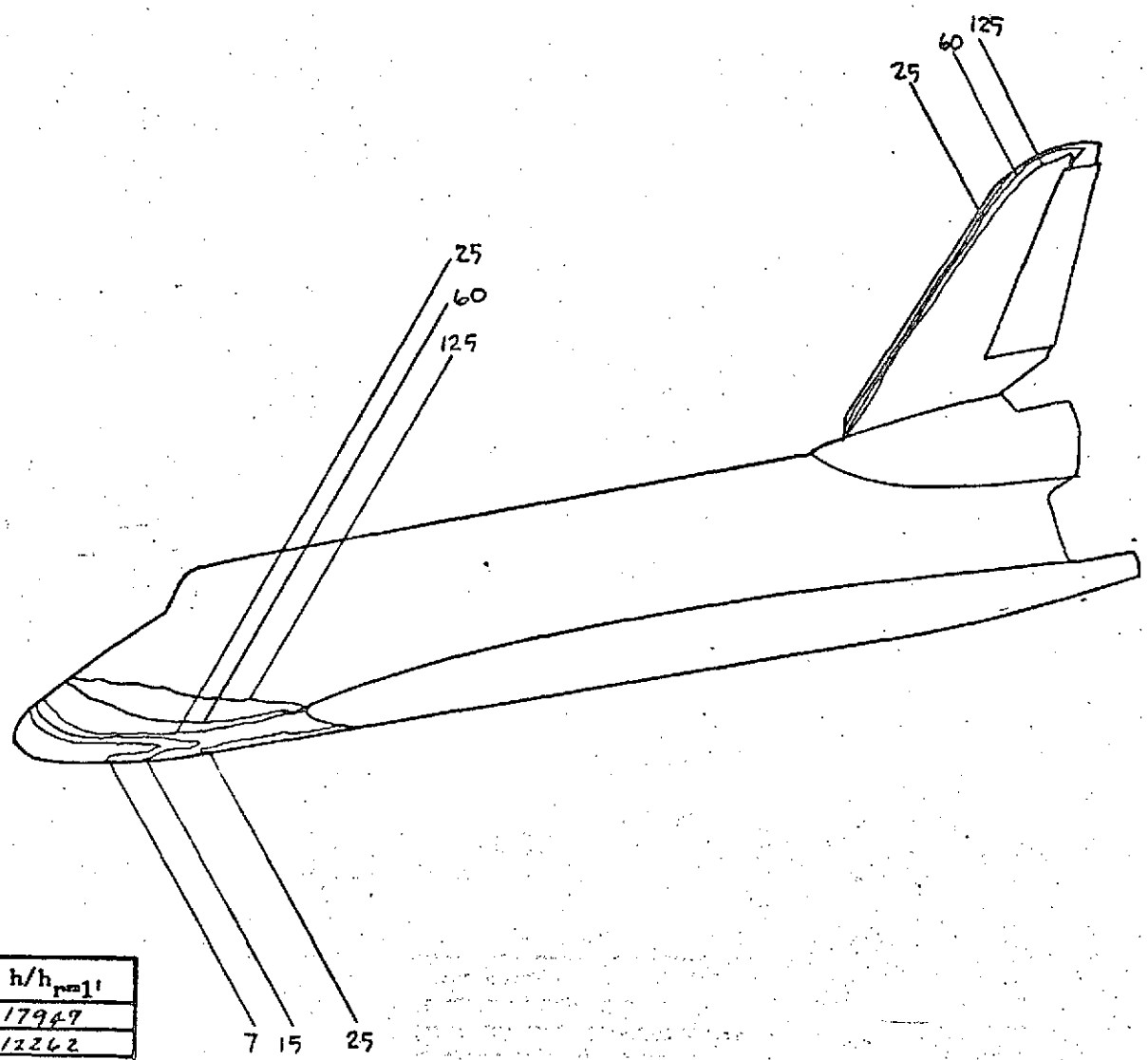

Isotherm	$h/h_{rm1'}$
7	.17949
15	.12262
25	.09498
60	.06131
125	.04247

FIG. 118

CONFIG. 46-4

LENGTH (ft) = .638

SCALE .00593

FACILITY LRC/UDT

TEST OH42A (RPA)

RUN 4102

M_∞ = 8

P_{total} (psi) = 160

T_{total} (°F) = 735

T_{aw}/T_{total} = .90

R_N per foot = 1×10^6

$T_{phase\ change}$ (°F) = 150

α = 25

β = 0

ϕ = 0

Camera Coordinates (from model center, x-axis parallel w/ stream, + downstream)

x (in) =

y (in) =

z (in) =

$HS = .03902 \frac{BTU}{FT^2\text{-}SEC\text{-}^oF}$

PHASE CHANGE TEST

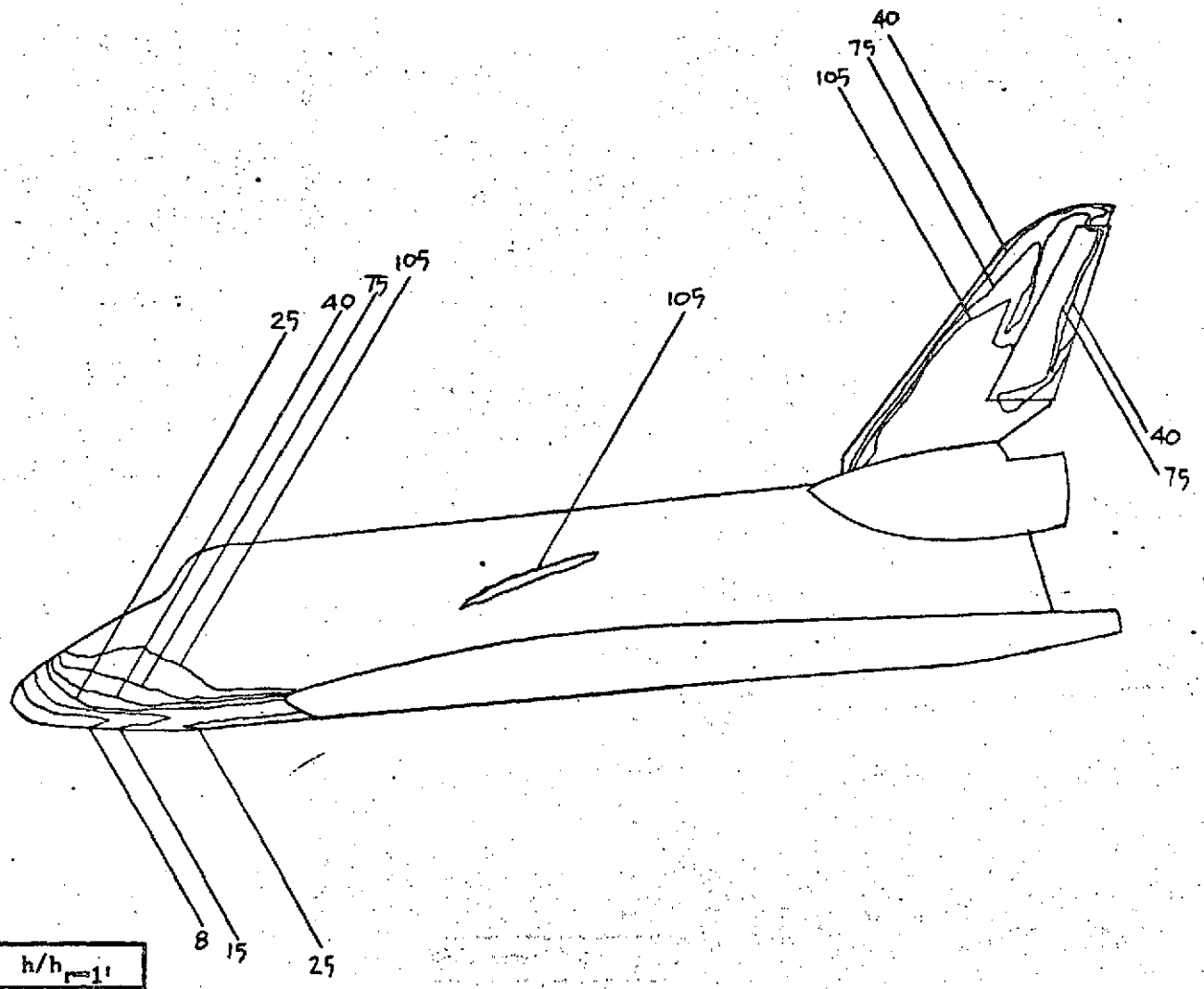

Isotherm	$h/h_{r=1'}$
8	.20374
15	.14879
25	.11525
40	.09111
75	.06654
105	.05624

FIG. 119

CONFIG. 46-4

LENGTH (ft) = .638

SCALE .00593

FACILITY LRC/UDT

TEST OH42A (RPA)

RUN 4104

M_∞ = 8

P_{total} (psi) = 1390

T_{total} (°F) = 910

T_{aw}/T_{total} = .90

R_N per foot = 6×10^6

$T_{phase\ change}$ (°F) = 300

α = 30

β = 0

ϕ = 0

Camera Coordinates (from model center, x-axis parallel w/ stream, + downstream)

x (in) =

y (in) =

z (in) =

HS = .10443 $\frac{BTU}{FT^2\text{-}SEC\text{-}^\circ F}$

HVD-EVCS

PHASE CHANGE TEST

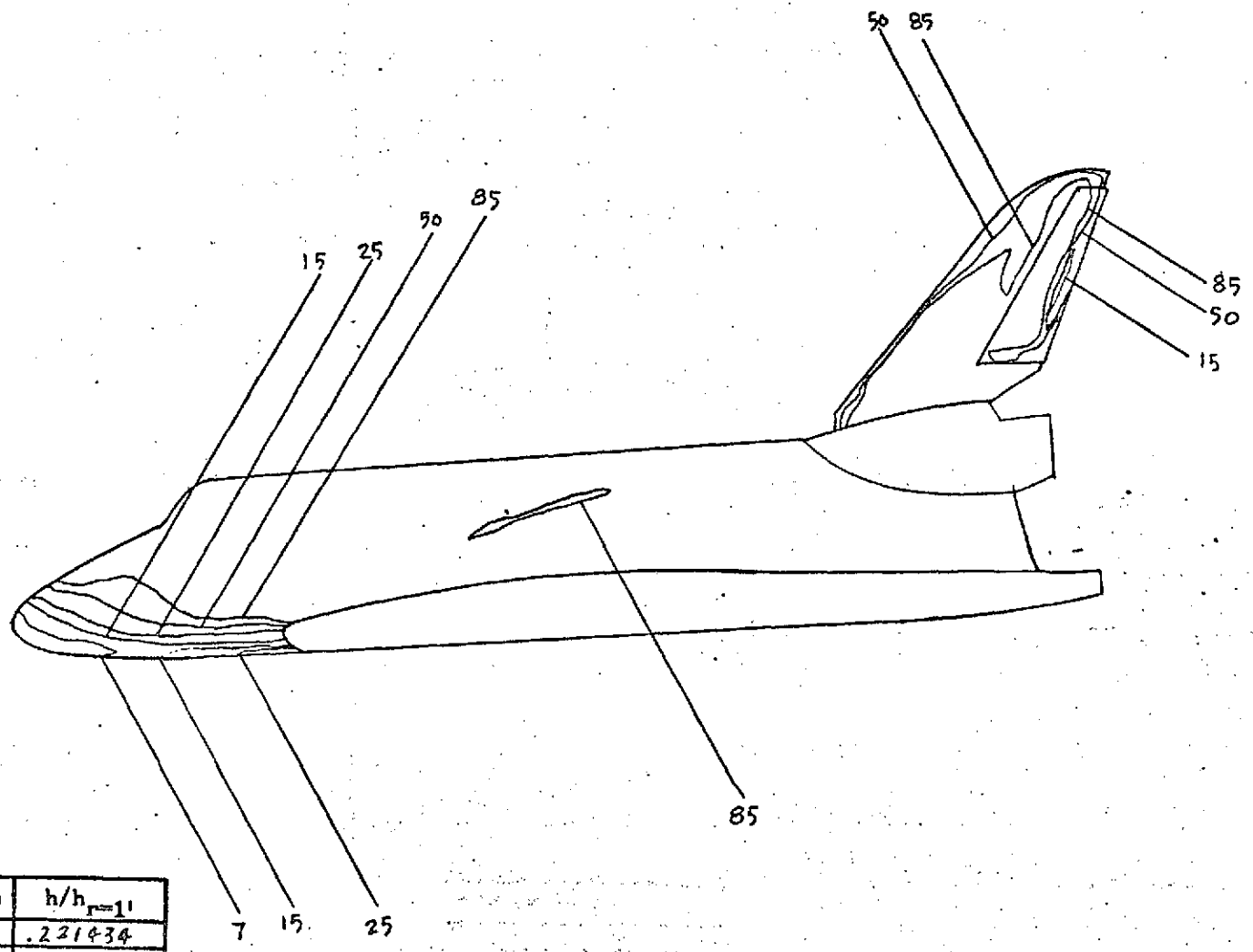

Isotherm	$h/h_{r=1}$
7	.221434
15	.151268
25	.117172
50	.082853
85	.063545

FIG. 120

CONFIG. 46-4

LENGTH (ft) = .638

SCALE .00593

FACILITY LRC/VDT

TEST OH42A (RPA)

RUN 4105

M_∞ = 8

P_{total} (psi) = 1940

T_{total} (°F) = 970

T_{aw}/T_{total} = .90

R_N per foot = 8×10^6

$T_{phase\ change}$ (°F) = 350

α = 30

β = 0

ϕ = 0

Camera Coordinates (from model center, x-axis parallel w/ stream, + downstream)

x (in) =

y (in) =

z (in) =

$HS = .1224 \frac{BTU}{FT^2\text{-}SEC\text{-}°F}$

PHASE CHANGE TEST

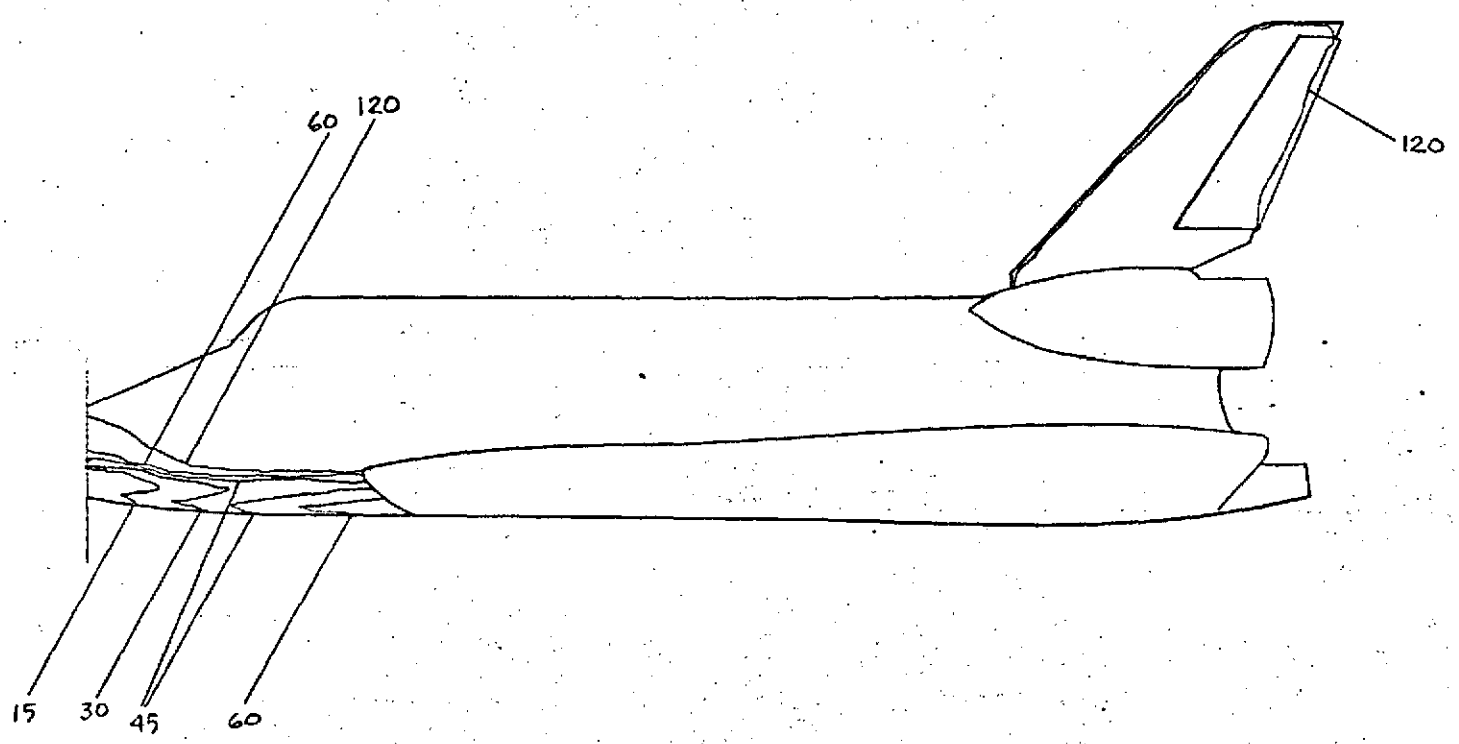

Isotherm	$h/h_{r=1}$
15	.257427
30	.182028
45	.148625
60	.128713
120	.091014

FIG. 121

CONFIG. 46-1

LENGTH (ft) = .638

SCALE .00593

FACILITY LRC/UDT

TEST OH42B (RPA)

RUN 4130

M_∞ = 8

P_{total} (psi) = 1390

T_{total} (°F) = 980

T_{ew}/T_{total} = .90

R_N per foot = 6×10^6

$T_{phase\ change}$ (°F) = 400

α = 35

β = 0

ϕ = 0

Camera Coordinates (from model center, x-axis parallel w/ stream, + downstream)

x (in) =

y (in) =

z (in) =

H_S = .105517 $\frac{BTU}{FT^2\text{-}SEC\text{-}^\circ F}$

PHASE CHANGE TEST

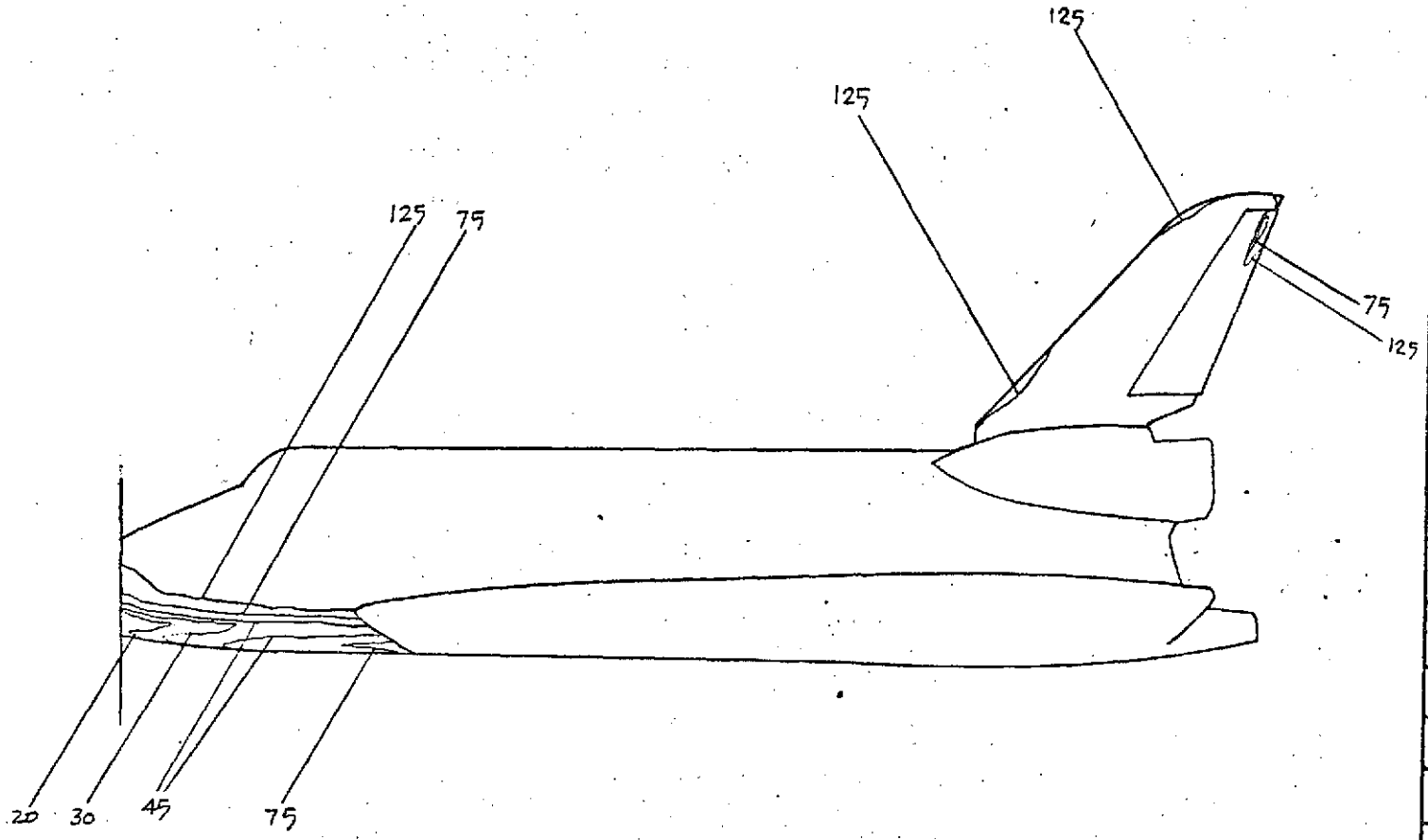

Isotherm	$h/h_{r=1'}$
20	.206840
30	.168884
45	.137893
75	.106812
125	.082736

FIG. 122

CONFIG. 46-4A

LENGTH (ft) = .638

SCALE .00593

FACILITY LRC/UOT

TEST OH42B (RPA)

RUN 4131

M_∞ = 8

P_{total} (psi) = 625

T_{total} (°F) = 910

T_{aw}/T_{total} = .90

R_N per foot = 3×10^6

$T_{phase\ change}$ (°F) = 300

α = 35

β = 0

ϕ = 0

Camera Coordinates (from model center, x-axis parallel w/ stream, + downstream)

x (in) =

y (in) =

z (in) =

H_S = $\frac{BTU}{FT^2 \cdot SEC \cdot °F}$

HVD-EVCS

NASA Langley (Feb. 1971)

PHASE CHANGE TEST

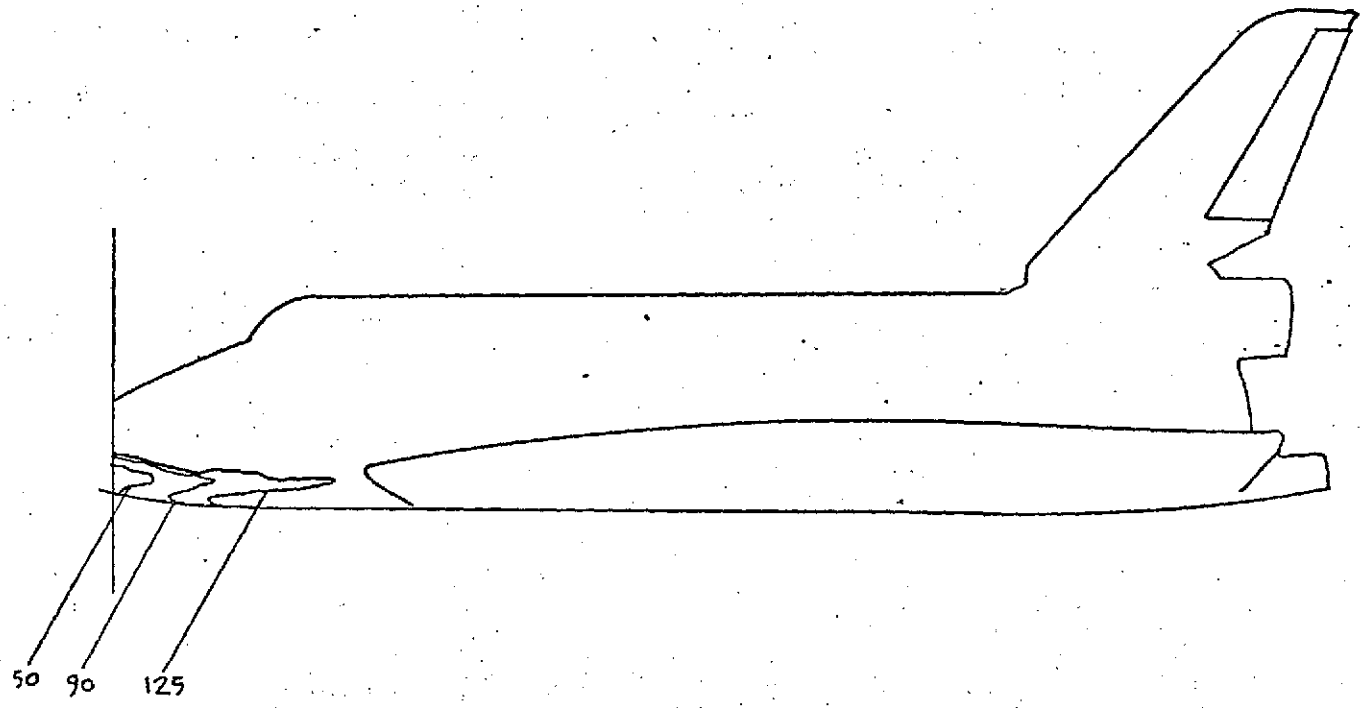

Isotherm	$h/h_{r=1}$
50	0.270008
90	0.205725
125	0.179563

FIG. 123

CONFIG. 46-2

LENGTH (ft) = .638

SCALE .00593

FACILITY LRC/UDT

TEST OH42B

RUN 4132

M_∞ = 8

P_{total} (psi) = 1390

T_{total} (°F) = 925

T_{aw}/T_{total} = .90

R_N per foot = 6×10^6

$T_{phase\ change}$ (°F) = 500

α = 35

β = 0

ϕ = 0

Camera Coordinates (from model center, x-axis parallel w/ stream, + downstream)

x (in) =

y (in) =

z (in) =

H_S = .104924 $\frac{BTU}{FT^2\text{-}SEC\text{-}°F}$

PHASE CHANGE TEST

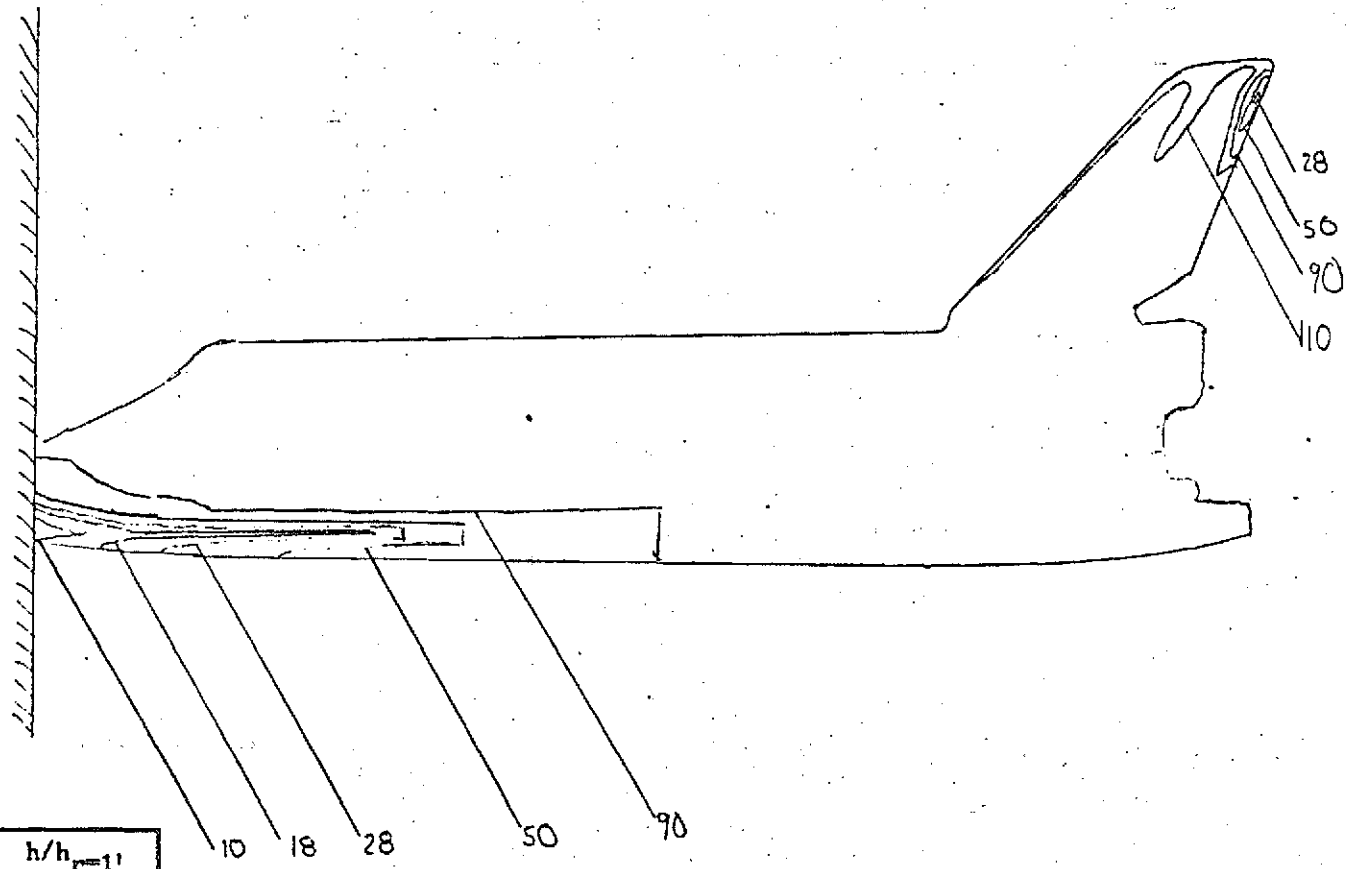

Isotherm	$h/h_{r=1'}$
10	0.208809
18	0.155697
28	0.124835
50	0.093482
90	0.069298
110	0.062925

FIG. 124

CONFIG. 46-4A

LENGTH (ft) = .638

SCALE .00593

FACILITY LRC/UDT

TEST OH42B (RPA)

RUN 4133

M_∞ = 8

P_{total} (psi) = 635

T_{total} (°F) = 880

T_{aw}/T_{total} = 0.90

R_N per foot = 3×10^6

$T_{phase\ change}$ (°F) = 250

α = 35°

β = 0

ϕ = 0

Camera Coordinates (from model center, x-axis parallel w/ stream, + downstream)

x (in) =

y (in) =

z (in) =

HS = 0.0730835 $\frac{BTU}{FT^3 - SEC - °F}$

MDS

PHASE CHANGE TEST

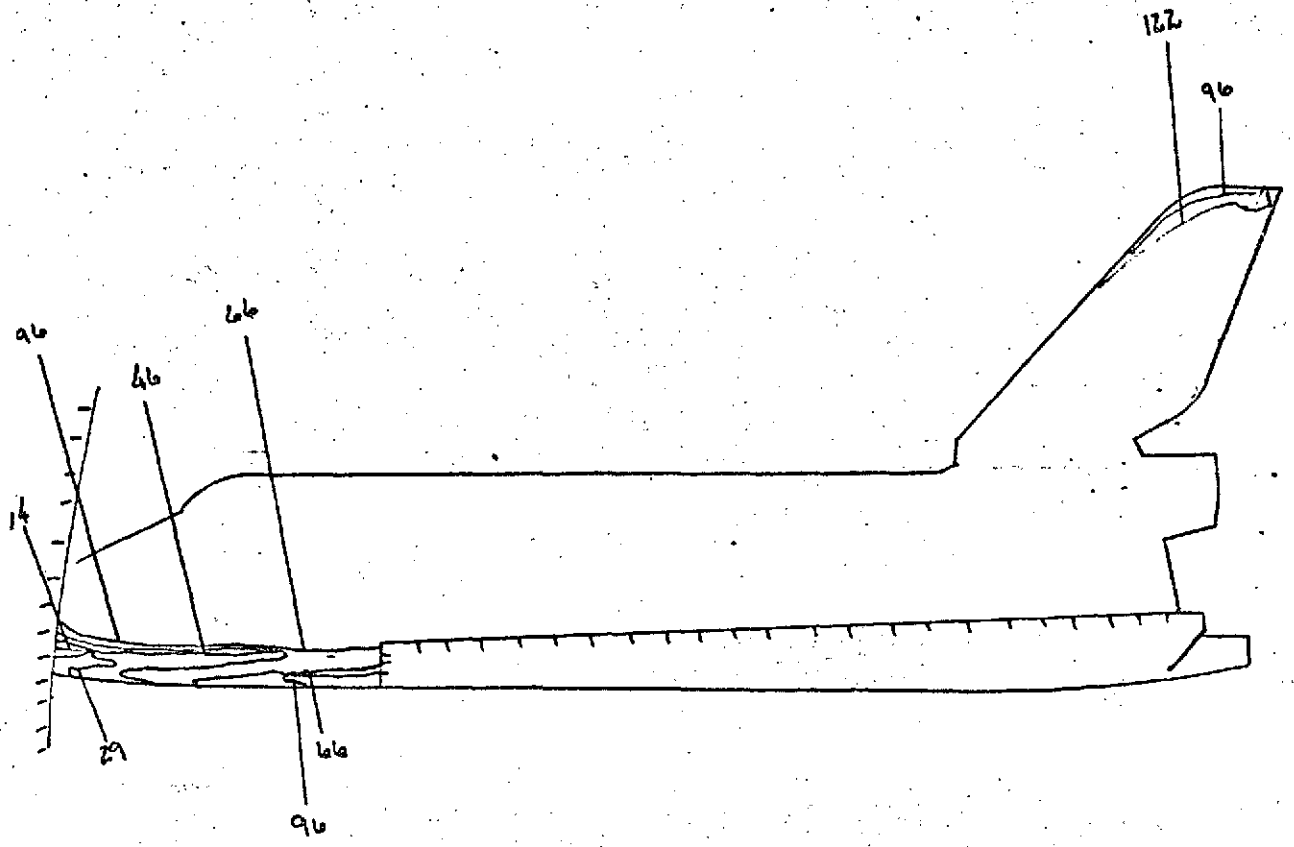

Isotherm	$h/h_{r=1'}$
14	0.261351
29	0.181589
46	0.144182
66	0.120370
96	0.098052
122	0.085338

FIG. 125

CONFIG. 46-2

LENGTH (ft) = .638

SCALE .00593

FACILITY LRC/UDT

TEST OH42B (RPA)

RUN 4134

M_∞ = 8

P_{total} (psi) = 625

T_{total} (°F) = 875

T_{aw}/T_{total} = 0.90

R_N per foot = 3×10^6

$T_{phase\ change}$ (°F) =

α = 35°

β = 0

ϕ = 0

Camera Coordinates (from model center, x-axis parallel w/ stream, + downstream)

x (in) =

y (in) =

z (in) =

Frames to ℄

HS = 0.0731502 $\frac{BTU}{FT^2}$ - SEC - °F

PHASE CHANGE TEST

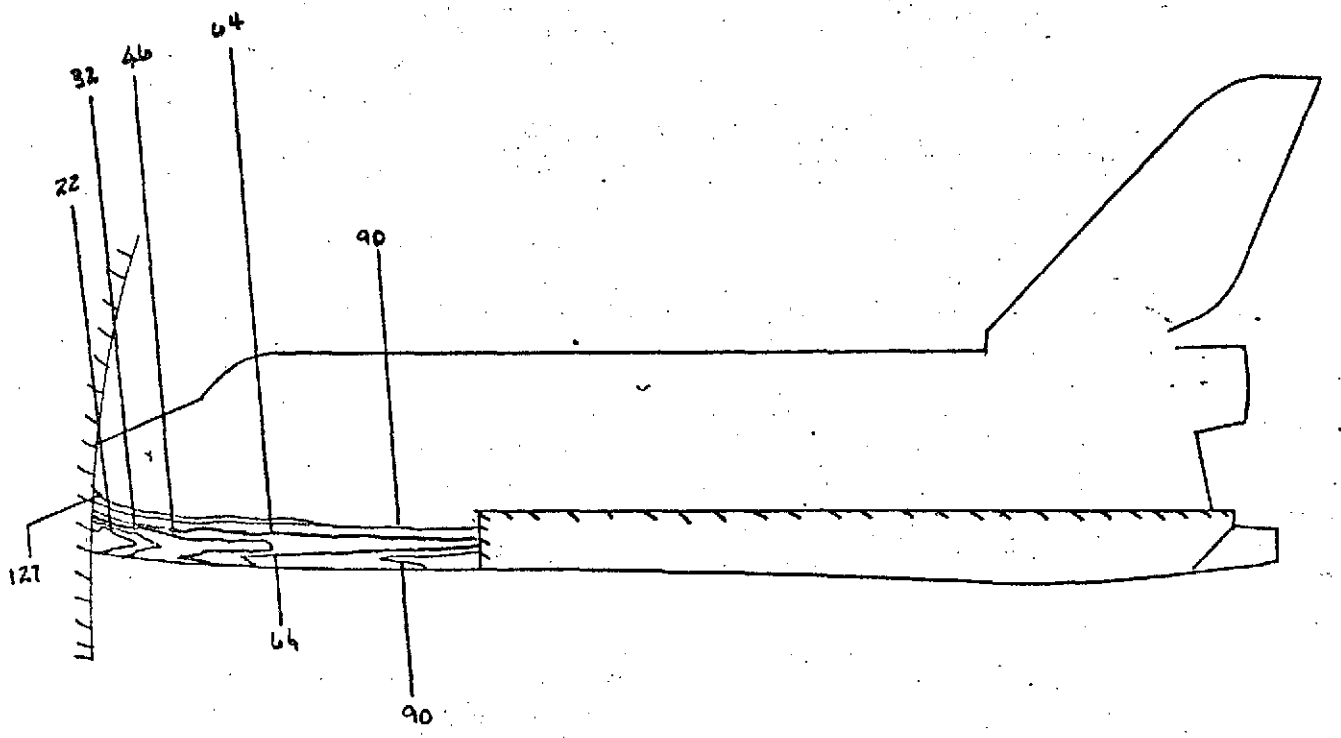

Isotherm	$h/h_{r=1'}$
22	0.159686
32	0.132404
46	0.110433
64	0.0936241
90	0.0789508
127	0.0664624

FIG. 126

CONFIG. 46-2

LENGTH (ft) = .638

SCALE .00593

FACILITY LRC/UDT

TEST OH42B (RPA)

RUN 4135

M_∞ = 8

P_{total} (psi) = 154

T_{total} (°F) = 765

T_{aw}/T_{total} = 0.90

R_N per foot = 1×10^6

$T_{phase\ change}$ (°F) = 175

α = 35

β = 0

ϕ = 0

Camera Coordinates (from model center, x-axis parallel w/ stream, + downstream)

x (in) =

y (in) =

z (in) =

STRAINS TO ℄

HS = 0.0387924 $\frac{BTU}{FT^2}$ - SEC - °F

HVD-EVCS

PHASE CHANGE TEST

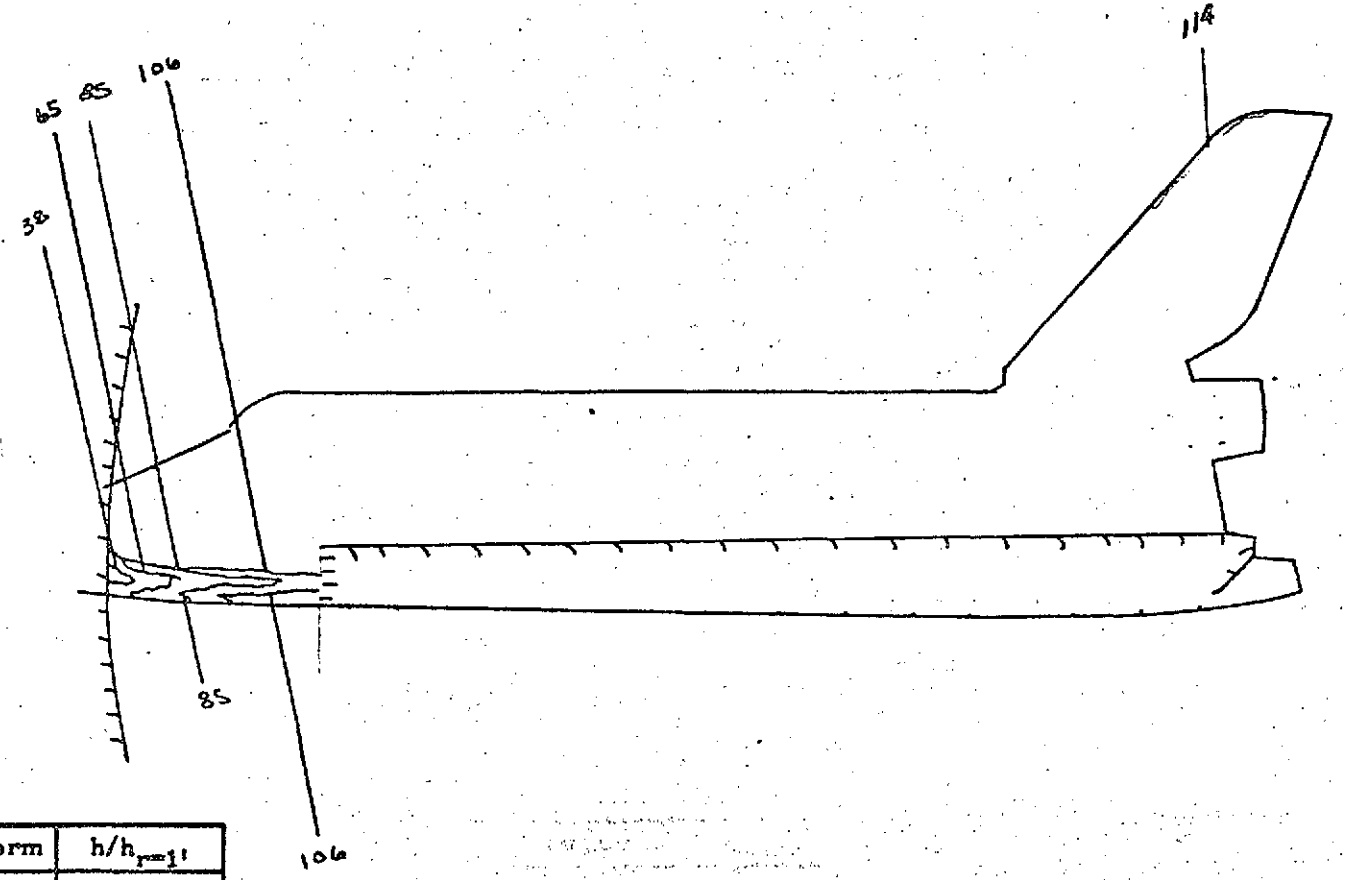

Isotherm	$h/h_{r=1}$
38	0.266312
65	0.203623
85	0.178113
106	0.159452
114	0.153755

FIG. 127

CONFIG. 46-2

LENGTH (ft) = .638

SCALE .00593

FACILITY LRC/UDT

TEST OH42B (RPA)

RUN 4136

M_∞ = 8

P_{total} (psi) = 1355

T_{total} (°F) = 890

T_{aw}/T_{total} = 0.90

R_N per foot = 6×10^6

$T_{phase\ change}$ (°F) = 450

α = 35

β = 0

ϕ = 0

Camera Coordinates (from model center, x-axis parallel w/ stream, + downstream)

x (in) =

y (in) =

z (in) =

STREAMS TO E

μ_S = 0.103513 $\frac{lbm}{ft \cdot sec \cdot °F}$

HVD-EVCS

PHASE CHANGE TEST

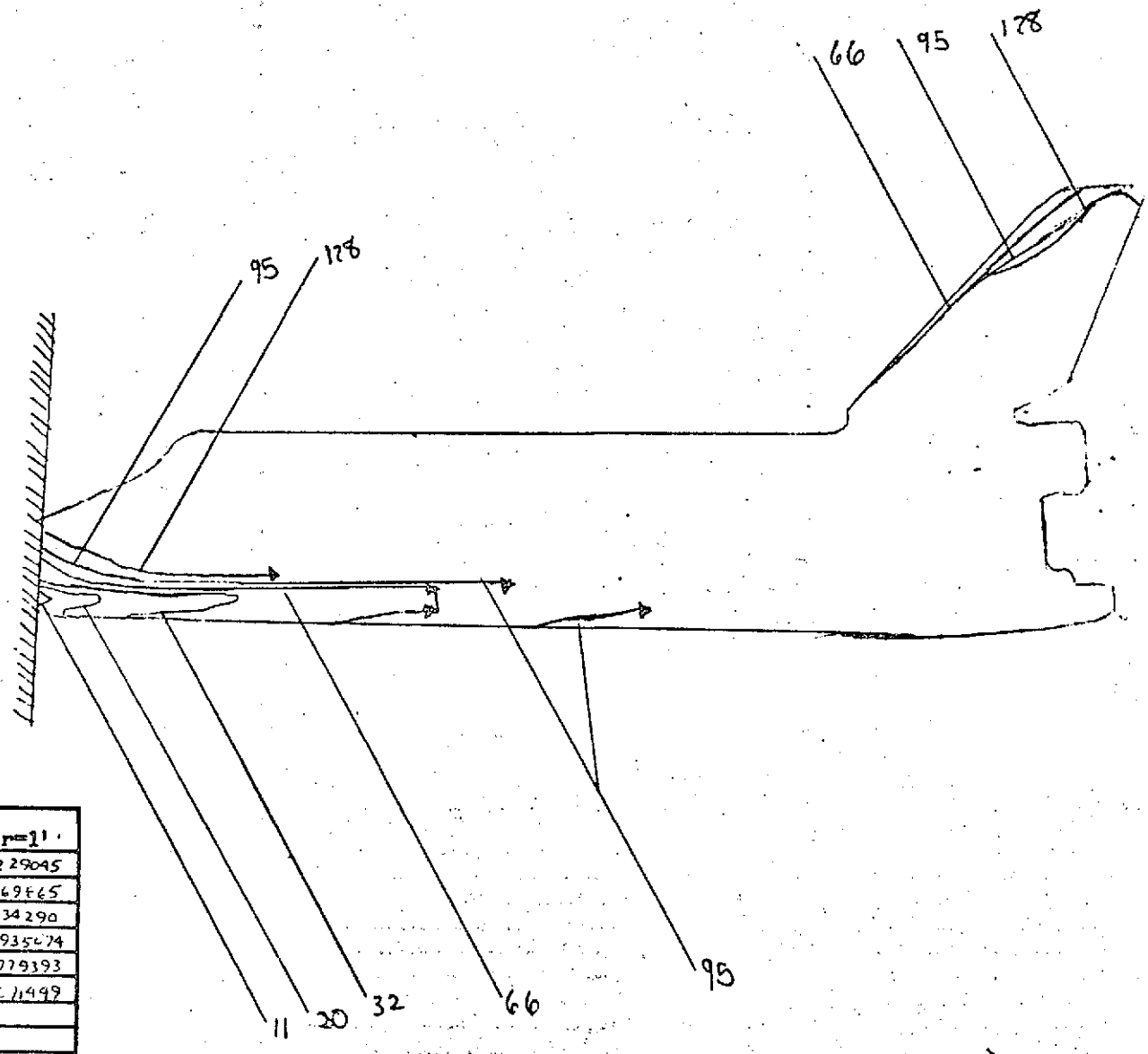

Isotherm	$h/h_{r=1'}$
11	0.229045
20	0.169465
32	0.134290
66	0.0935074
95	0.0779393
128	0.0611499

FIG. 128

CONFIG. 46-2

LENGTH (ft) = .638

SCALE .00593

FACILITY LRC/VDT

TEST OH42 (RPA)

RUN 4137

M_∞ = 8

P_{total} (psi) = 850

T_{total} (°F) = 925

T_{aw}/T_{total} = 0.90

R_N per foot = 4×10^6

$T_{phase\ change}$ (°F) = 300

α = 35

β = 0

ϕ = 0

Camera Coordinates (from model center, x-axis parallel w/ stream, + downstream)

x (in) =

y (in) =

z (in) =

PERFECT GAS IN S TERMS
HS = 0.08386 $\frac{BTU}{FT^2 - SEC - °F}$
MDS

PHASE CHANGE TEST

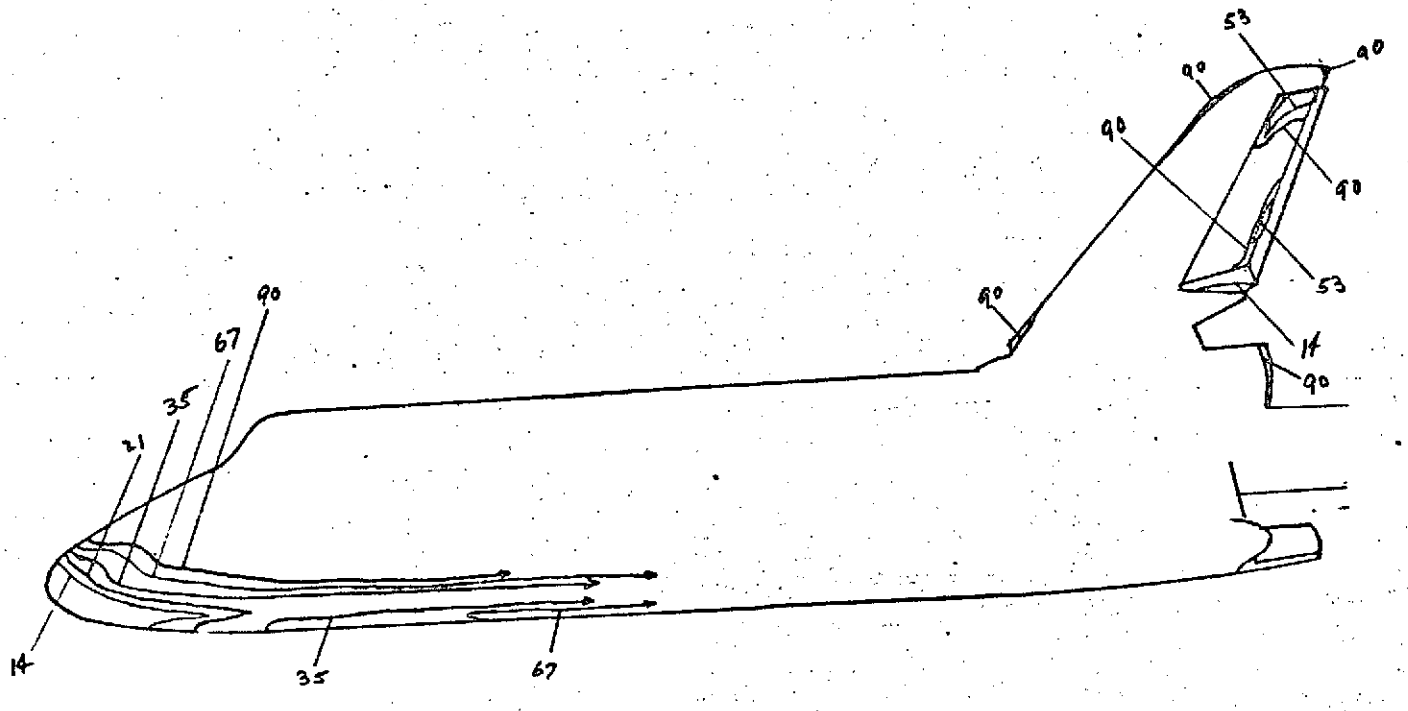

Isotherm	$h/h_{T=1}$
14	0.208524
21	0.170259
35	0.131882
53	0.107172
67	0.0953197
90	0.0822429

FIG. 129

CONFIG. 46-4A

LENGTH (ft) = .638

SCALE .00593

FACILITY LRC/UDT

TEST OH42B

RUN 4140

M_∞ = 8

P_{total} (psi) = 1615

T_{total} (°F) = 930

T_{aw}/T_{total} = 0.90

R_N per foot = 7×10^6

$T_{phase\ change}$ (°F) = 350

α = 30

β = 0

ϕ = 0

Camera Coordinates (from model center, x-axis parallel w/ stream, + downstream)

x (in) =

y (in) =

z (in) =

ϕ AT FRAME 5

H_S = 0.112775 $\frac{BTU}{FT^2}$ - SEC - °F

HVD-EVCS

PHASE CHANGE TEST

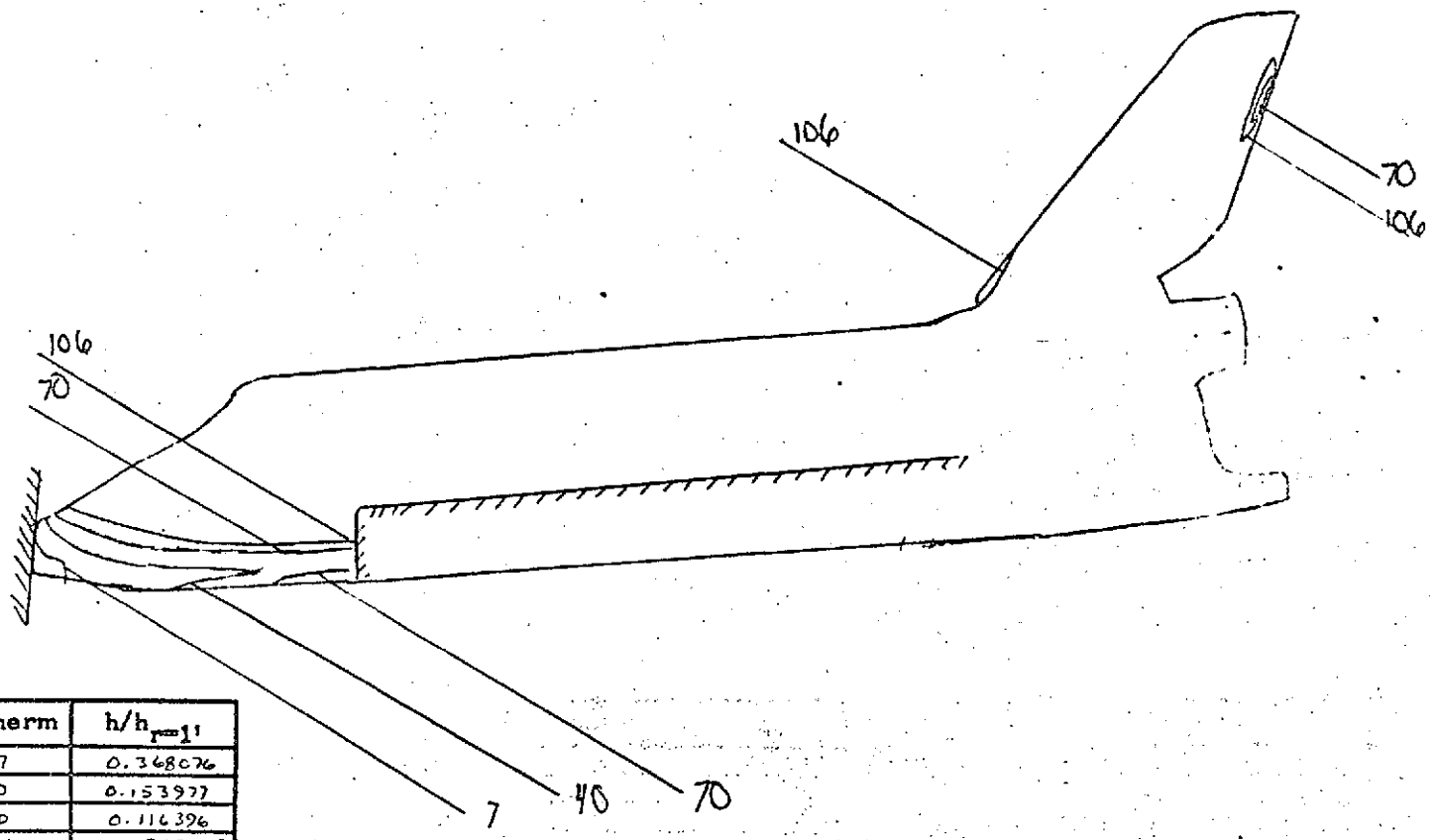

Isotherm	$h/h_{r=1'}$
7	0.368076
40	0.153977
70	0.116396
106	0.0945875

FIG. 130

CONFIG. 46-2

LENGTH (ft) = .638

SCALE .00593

FACILITY LRC/UDT

TEST OH42B (RPA)

RUN 4141

M_∞ = 8

P_{total} (psi) = 635

T_{total} (°F) = 875

T_{aw}/T_{total} = 0.90

R_N per foot = 3×10^6

$T_{phase\ change}$ (°F) = 300

α = 30

β = 0

ϕ = 0

Camera Coordinates (from model center, x-axis parallel w/ stream, + downstream)

x (in) =

y (in) =

z (in) =

HIT ℄ ON FRONT 6

AIDS

HS = 0.0731502 $\frac{BTU}{FT^2}$ - SEC. °F

HVD-EVCS

(ASA Langley (Feb. 1971)

PHASE CHANGE TEST

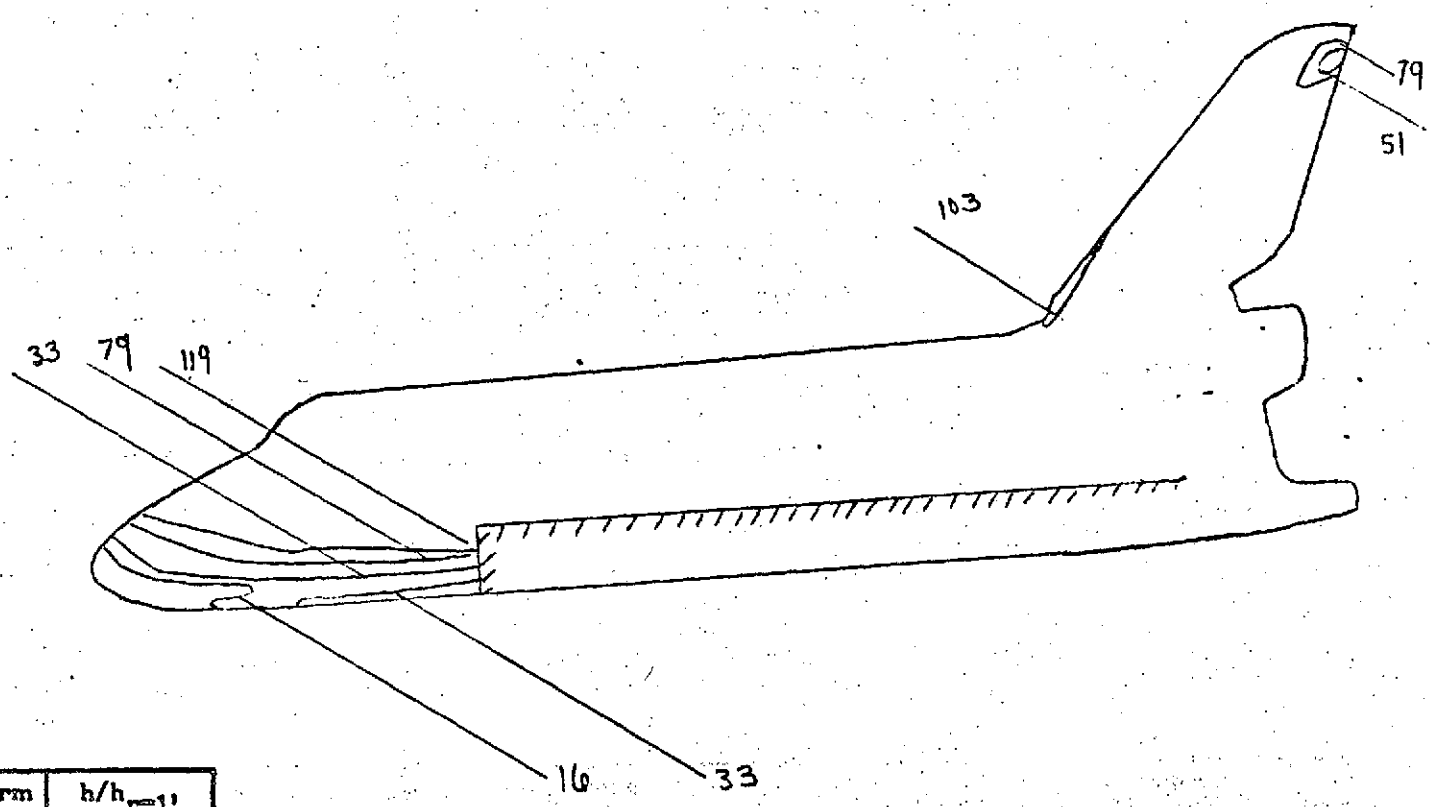

Isotherm	$h/h_{r=1}$
16	0.170899
33	0.118999
51	0.0957229
79	0.0769108
103	0.0673569
119	0.0626653

FIG. 131

CONFIG. 46-4A

LENGTH (ft) = .638

SCALE .00593

FACILITY LRC/VDT

TEST OH42B (RPA)

RUN 4147

M_∞ = 8

P_{total} (psi) = 1120

T_{total} (°F) = 925

T_{aw}/T_{total} = 0.90

R_N per foot = 5×10^6

$T_{phase\ change}$ (°F) = 300

α = 30

β = 0

ϕ = 0

Camera Coordinates (from model center, x-axis parallel w/ stream, + downstream)

x (in) =

y (in) =

z (in) =

HIT ℄ ON FRAME

HS = 0.0951807 $\frac{BTU}{FT^2}$ - sec - °F

HVD-EVCS

NASA Langley (Feb. 1971)

PHASE CHANGE TEST

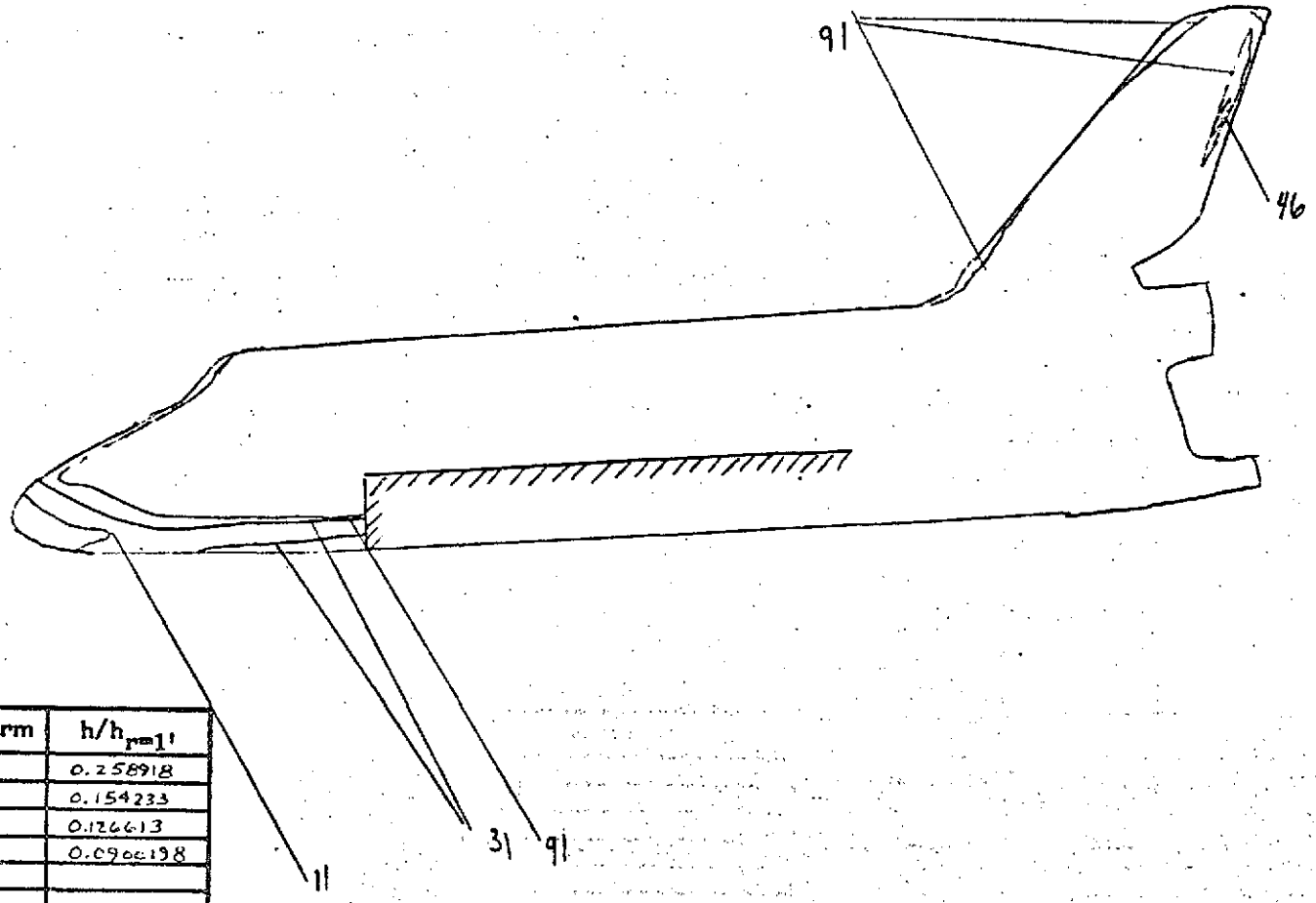

Isotherm	$h/h_{r=1'}$
11	0.258918
31	0.154233
46	0.126613
91	0.090c198

FIG. 132

CONFIG. 46-2

LENGTH (ft) = .638

SCALE .00593

FACILITY LRC/VDT

TEST OH42B (RPA)

RUN 4143

M_∞ = 8

P_{total} (psi) = 1390

T_{total} (°F) = 915

T_{aw}/T_{total} = 0.90

R_N per foot = 6×10^6

$T_{phase\ change}$ (°F) = 350

α = 30

β = 0

ϕ = 0

Camera Coordinates (from model center, x-axis parallel w/ stream, + downstream)

x (in) =

y (in) =

z (in) =

HIT ℓ ON PAGE 6

HS = 0.105092 $\frac{BTU}{FT^2 - SEC - °F}$

HVD-EVCS

PHASE CHANGE TEST

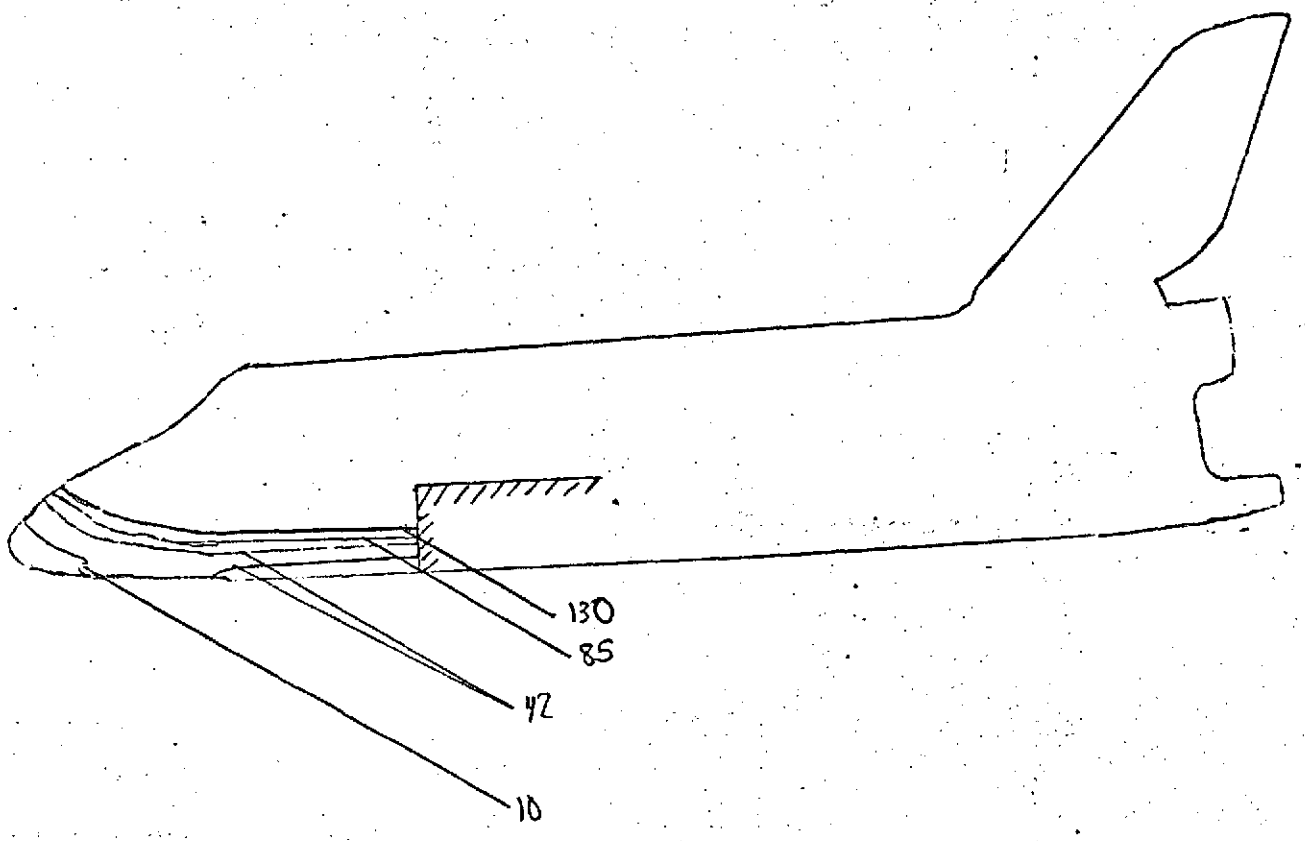

Isotherm	$h/h_{r=1'}$
10	0.236936
42	0.115613
85	0.0812649
130	0.0657193

FIG. 133

CONFIG. 46-4A

LENGTH (ft) = .638

SCALE .00593

FACILITY LRC/UDT

TEST OH42B (RPA

RUN 4144

M_∞ = 8

P_{total} (psi) = 165

T_{total} (°F) = 760

T_{aw}/T_{total} = 0.90

R_N per foot = 1×10^6

$T_{phase\ change}$ (°F) = 175

α = 30

β = 0

ϕ = 0

Camera Coordinates (from model center, x-axis parallel w/ stream, + downstream)

x (in) =

y (in) =

z (in) =

HS = 0.0399106 $\frac{BTU}{FT^2 - SEC - °F}$

HVD-EVCS

PHASE CHANGE TEST

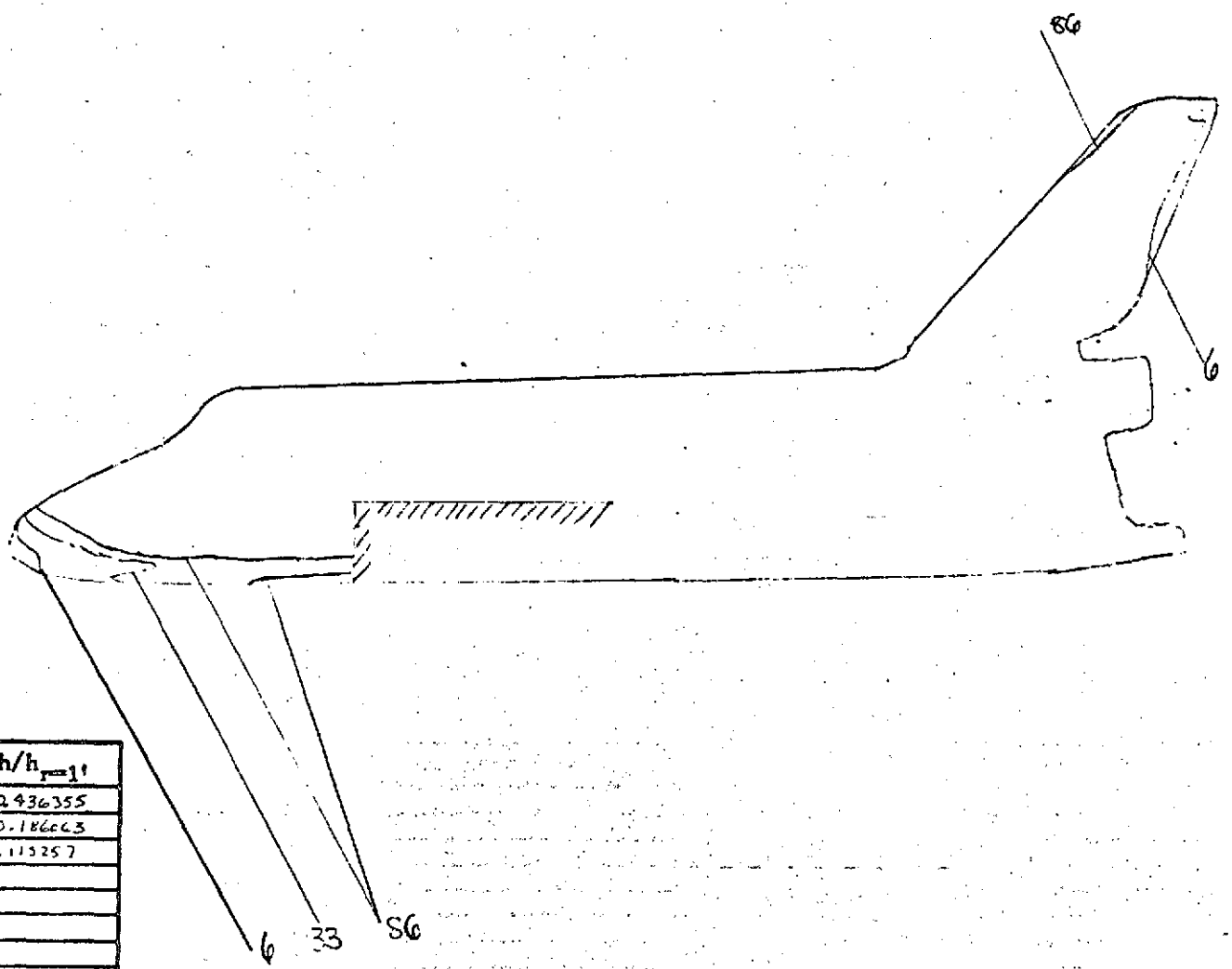

Isotherm	$h/h_{r=1'}$
6	0.436355
33	0.186663
86	0.115257

FIG. 134

CONFIG. 46-2

LENGTH (ft) = .638

SCALE .00593

FACILITY LRC/UDT

TEST OH42B (RPA)

RUN 4145

M_∞ = 8

P_{total} (psi) = 1615

T_{total} (°F) = 915

T_{aw}/T_{total} = 0.90

R_N per foot = 7×10^6

$T_{phase\ change}$ (°F) = 400

α = 30

β = 0

ϕ = 0

Camera Coordinates (from model center, x-axis parallel w/ stream, + downstream)

x (in) =

y (in) =

z (in) =

Reaches [illegible] in from 6

HS = 0.112584 $\frac{BTU}{FT^2}$-SEC-°F

NASA Langley (Feb. 1971)

HVD-EVCS

PHASE CHANGE TEST

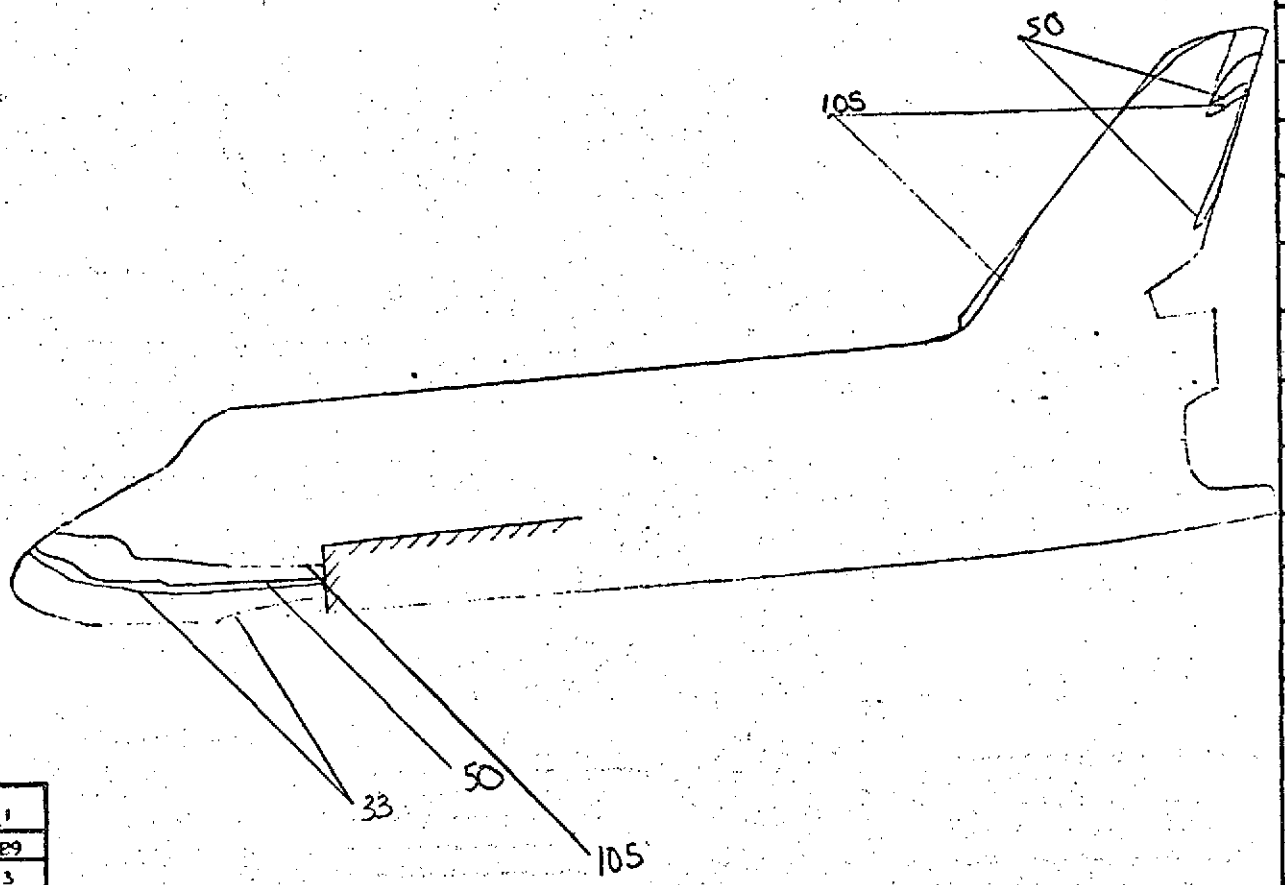

Isotherm	$h/h_{r=1}$
33	0.143689
50	0.116733
105	0.0805537

FIG. 135

CONFIG. 46-4A

LENGTH (ft) = .638

SCALE .00593

FACILITY LRC/UDT

TEST OH42B (RPA)

RUN 4146

M_∞ = 8

P_{total} (psi) = 1380

T_{total} (°F) = 935

T_{aw}/T_{total} = 0.90

R_N per foot = 6×10^6

$T_{phase\ change}$ (°F) = 350

α = 30

β = 0

ϕ = 0

Camera Coordinates (from model center, x-axis parallel w/ stream, + downstream)

x (in) =

y (in) =

z (in) =

Reaction ¢ on Frame ⊙

HS = 0.104895 $\frac{BTU}{FT^2}$-SEC-°F

HVD-EVCS

ISA Langley (Feb. 1971)

PHASE CHANGE TEST

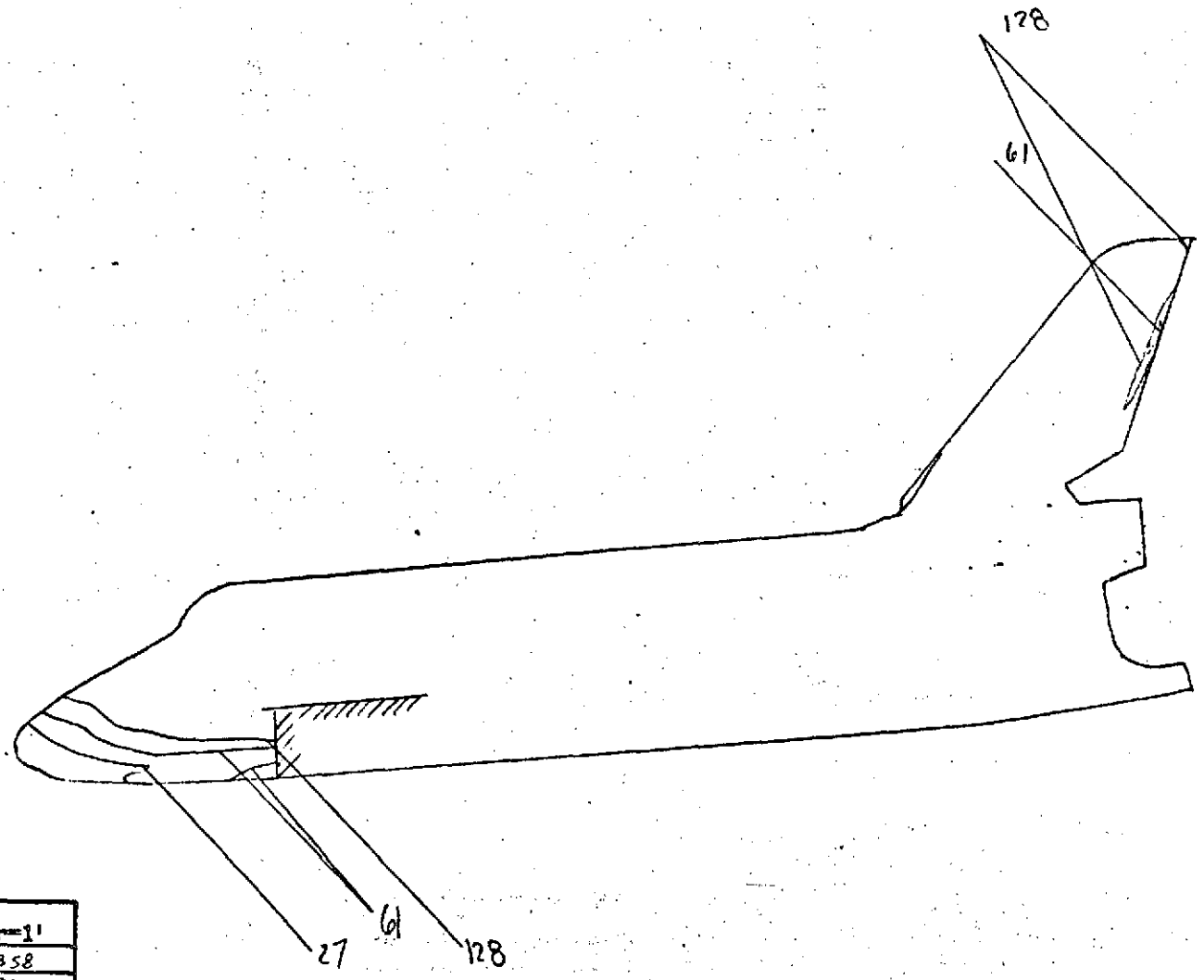

Isotherm	$h/h_{r=1'}$
27	0.176358
61	0.117331
128	0.0809978

FIG. 136

CONFIG. 46-2

LENGTH (ft) = .638

SCALE .00593

FACILITY LRC/VDT

TEST OH42B (RPA)

RUN 4147

M_∞ = 8

P_{total} (psi) = 615

T_{total} (°F) = 910

T_{aw}/T_{total} = 0.90

R_N per foot = 3×10^6

$T_{phase\ change}$ (°F) = 300

α = 30

β = 0

ϕ = 0

Camera Coordinates (from model center, x-axis parallel w/ stream, + downstream)

x (in) =

y (in) =

z (in) =

Reference ℄ on frame 6

HS = 0.0722867 $\frac{BTU}{FT^2}$-SEC-°F

MPS

HVD-EVCS

NASA Langley (Feb. 1971)

PHASE CHANGE TEST

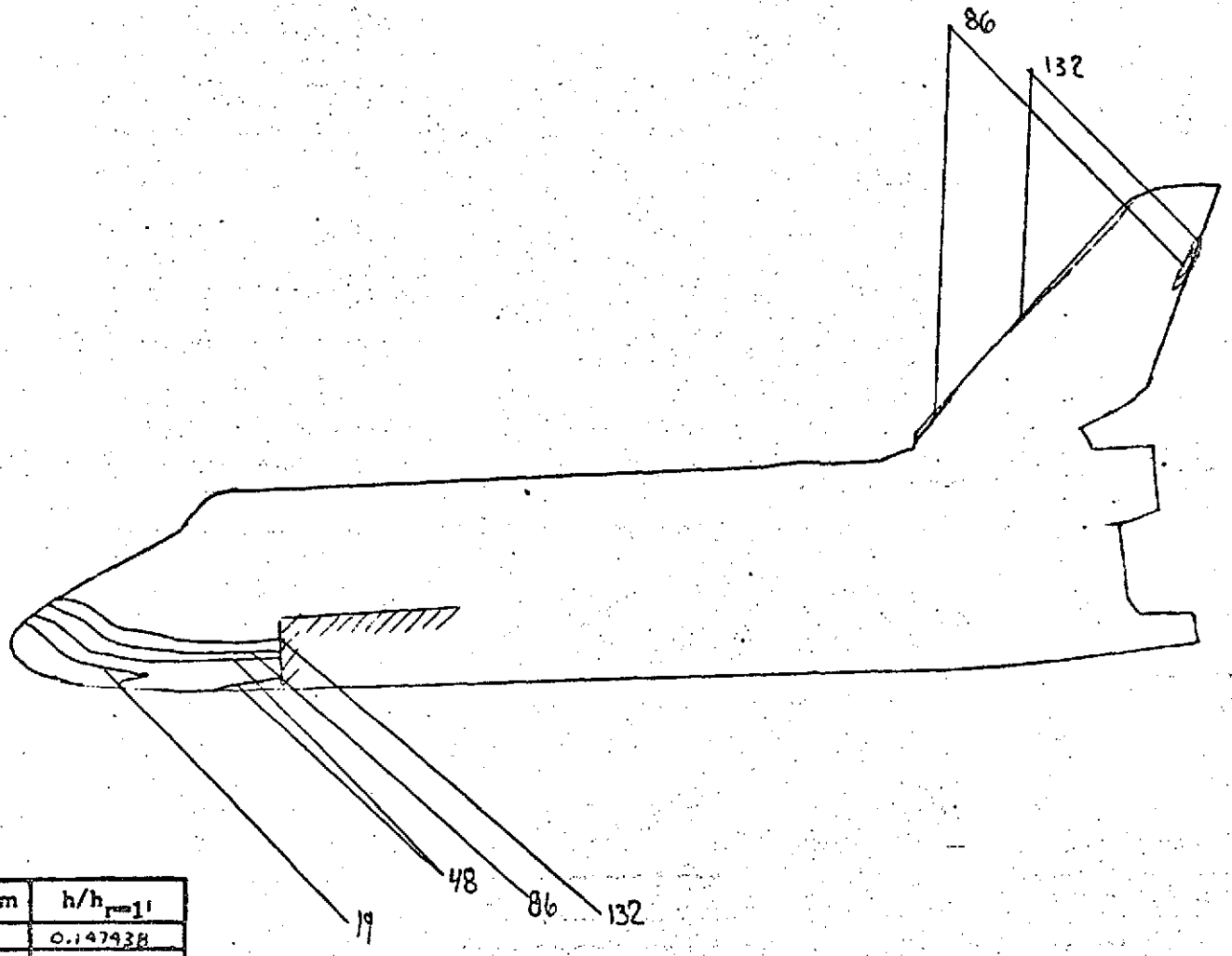

Isotherm	$h/h_{r=1'}$
19	0.147438
48	0.0927612
86	0.0693007
132	0.0559371

FIG. 137

CONFIG. 46-2

LENGTH (ft) = .638

SCALE .00593

FACILITY LRC/UDT

TEST OH42B (RPA)

RUN 4148

M_∞ = 8

P_{total} (psi) = 165

T_{total} (°F) = 810

T_{aw}/T_{total} = 0.90

R_N per foot = 1×10^6

$T_{phase\ change}$ (°F) = 175

α = 30

β = 0

ϕ = 0

Camera Coordinates (from model center, x-axis parallel w/ stream, + downstream)

x (in) =

y (in) =

z (in) =

Reference Conform 6

HS = 0.0400807 $\frac{BTU}{FT^2}$-SEC-°F

MDS

HVD-EVCS

Langley (Feb. 1971)

PHASE CHANGE TEST

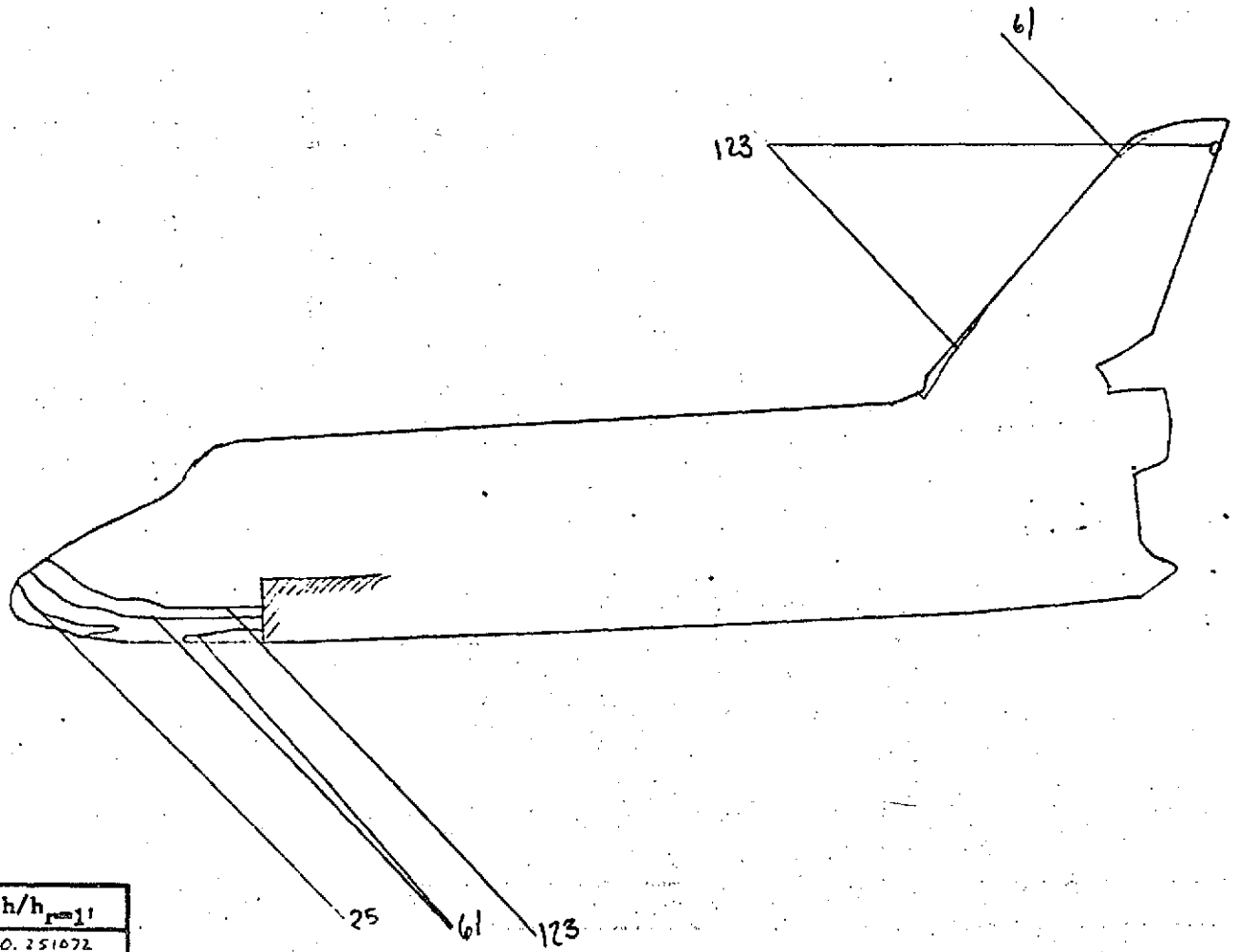

Isotherm	$h/h_{r=1'}$
25	0.251072
61	0.160732
123	0.113192

FIG. 138

CONFIG. 46-4ABF

LENGTH (ft) = .638

SCALE .00593

FACILITY LRC/UDT

TEST OH42B (RPA)

RUN 4150

M_∞ = 8

P_{total} (psi) = 635

T_{total} (°F) = 900

T_{aw}/T_{total} = 0.90

R_N per foot = 3×10^6

$T_{phase\ change}$ (°F) = 350

α = 30

β = 0

ϕ = 0

Camera Coordinates (from model center, x-axis parallel w/ stream, + downstream)

x (in) =

y (in) =

z (in) =

$HS = 0.07329 \frac{BTU}{FT^3 - SEC - °F}$

HVD-EVCR

PHASE CHANGE TEST

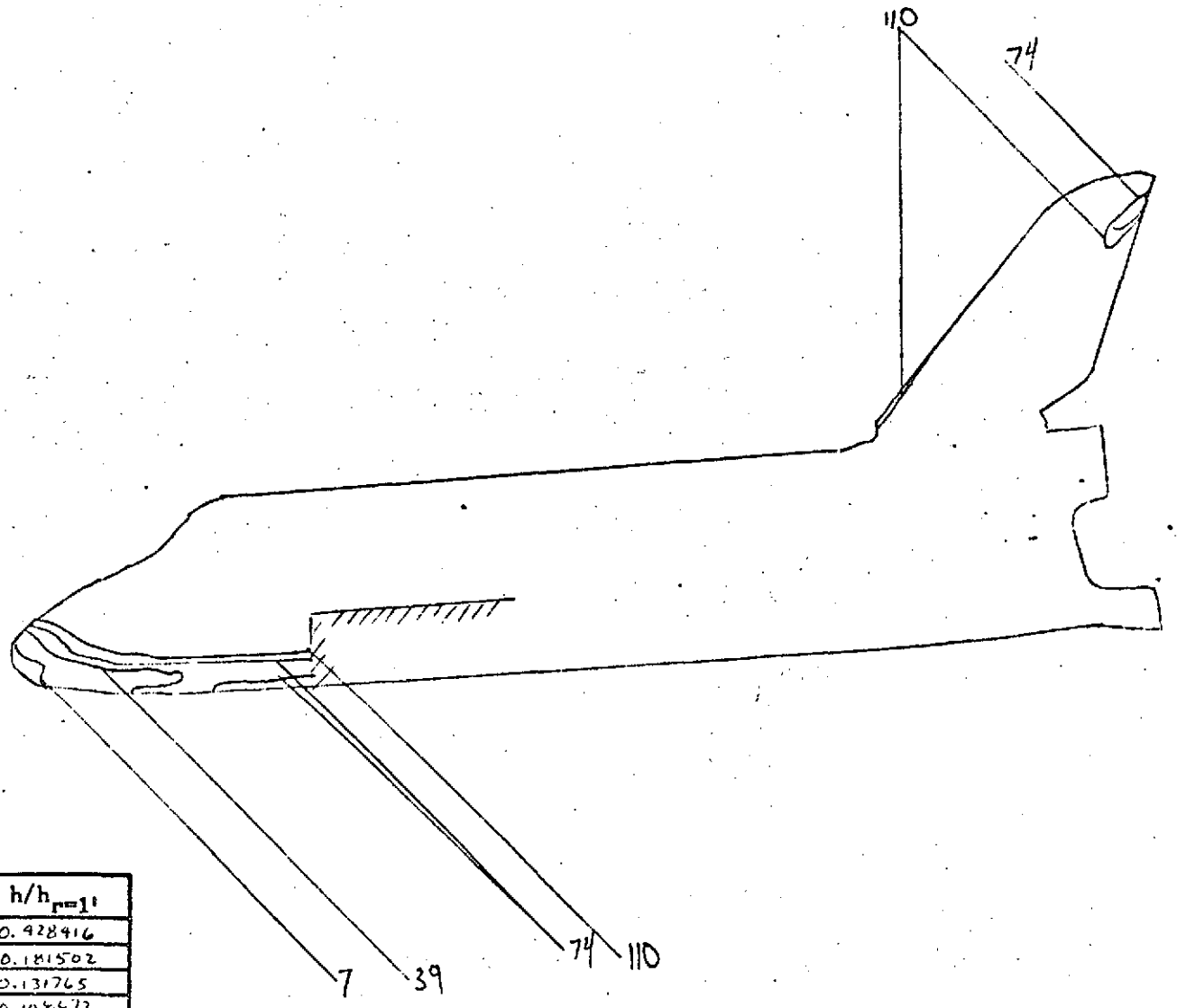

Isotherm	$h/h_{r=1'}$
7	0.428416
39	0.181502
74	0.131765
110	0.108673

FIG. 139

CONFIG. 46-ABF

LENGTH (ft) = .638

SCALE .00593

FACILITY LRC/UDT

TEST OH42B (RPA)

RUN 4152

M_∞ = 8

P_{total} (psi) = 1405

T_{total} (°F) = 900

T_{aw}/T_{total} = 0.90

R_N per foot = 6×10^6

$T_{phase\ change}$ (°F) = 400

α = 30

β = 0

ϕ = 0

Camera Coordinates (from model center, x-axis parallel w/ stream, + downstream)

x (in) =

y (in) =

z (in) =

HS = 0.105513 $\frac{BTU}{FT^2}$ - SEC - °F

PHASE CHANGE TEST

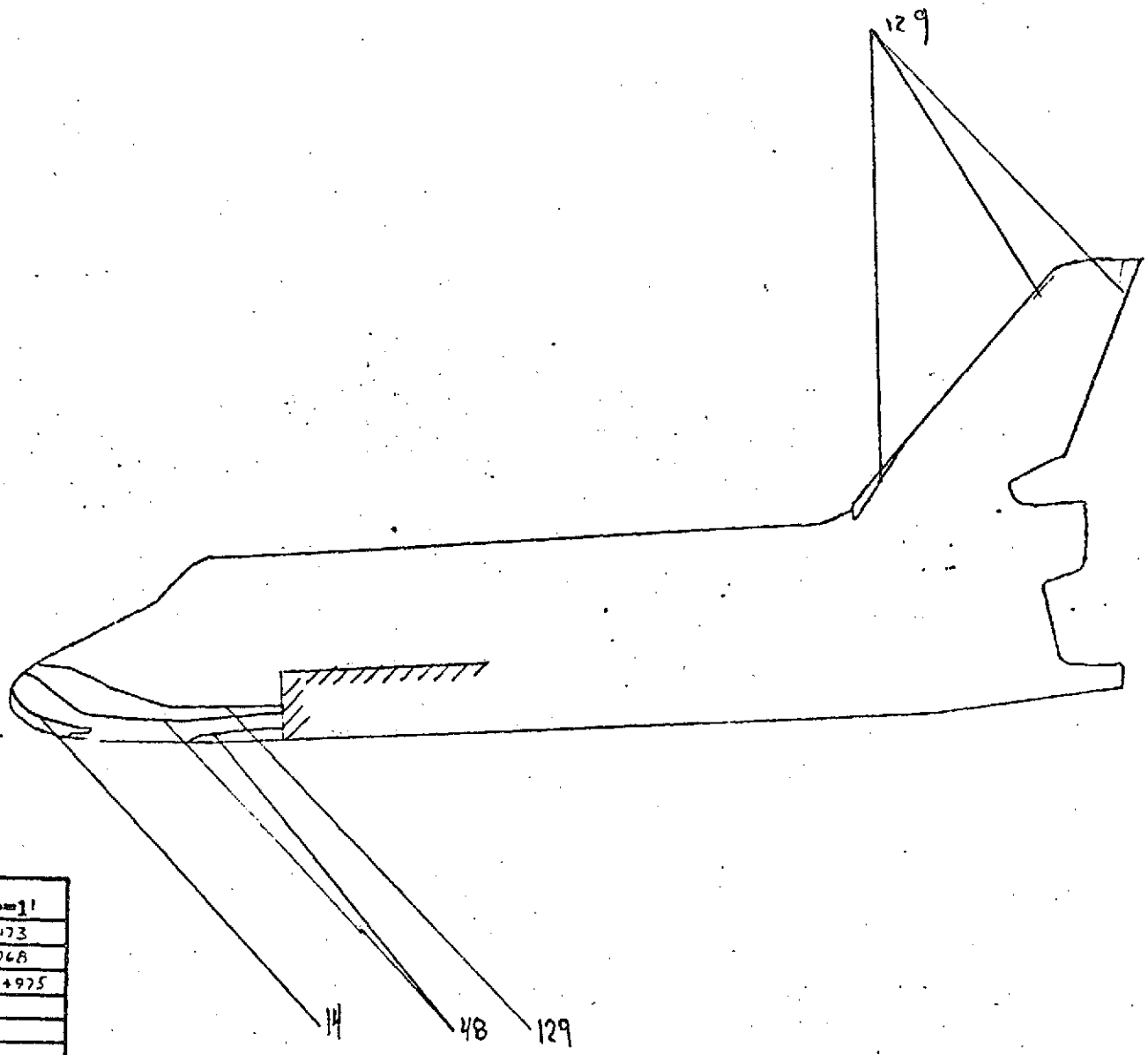

Isotherm	$h/h_{r=1}$
14	0.229173
48	0.123768
129	0.00754975

FIG. 140

CONFIG. 46-1

LENGTH (ft) = .638

SCALE .00593

FACILITY LRC/UDT

TEST OH42B (RPA)

RUN 4153

M_∞ = 8

P_{total} (psi) = 640

T_{total} (°F) = 920

T_{aw}/T_{total} = 0.90

R_N per foot = 3×10^6

$T_{phase\ change}$ (°F) = 300

α = 30

β = 0

ϕ = 0

Camera Coordinates (from model center, x-axis parallel w/ stream, + downstream)

x (in) =

y (in) =

z (in) =

Reaches ℄ on frame 6

LDS

HS = 0.0736592 $\frac{BTU}{FT^2}$ - SEC-°F

Langley (Feb. 1971)

PHASE CHANGE TEST

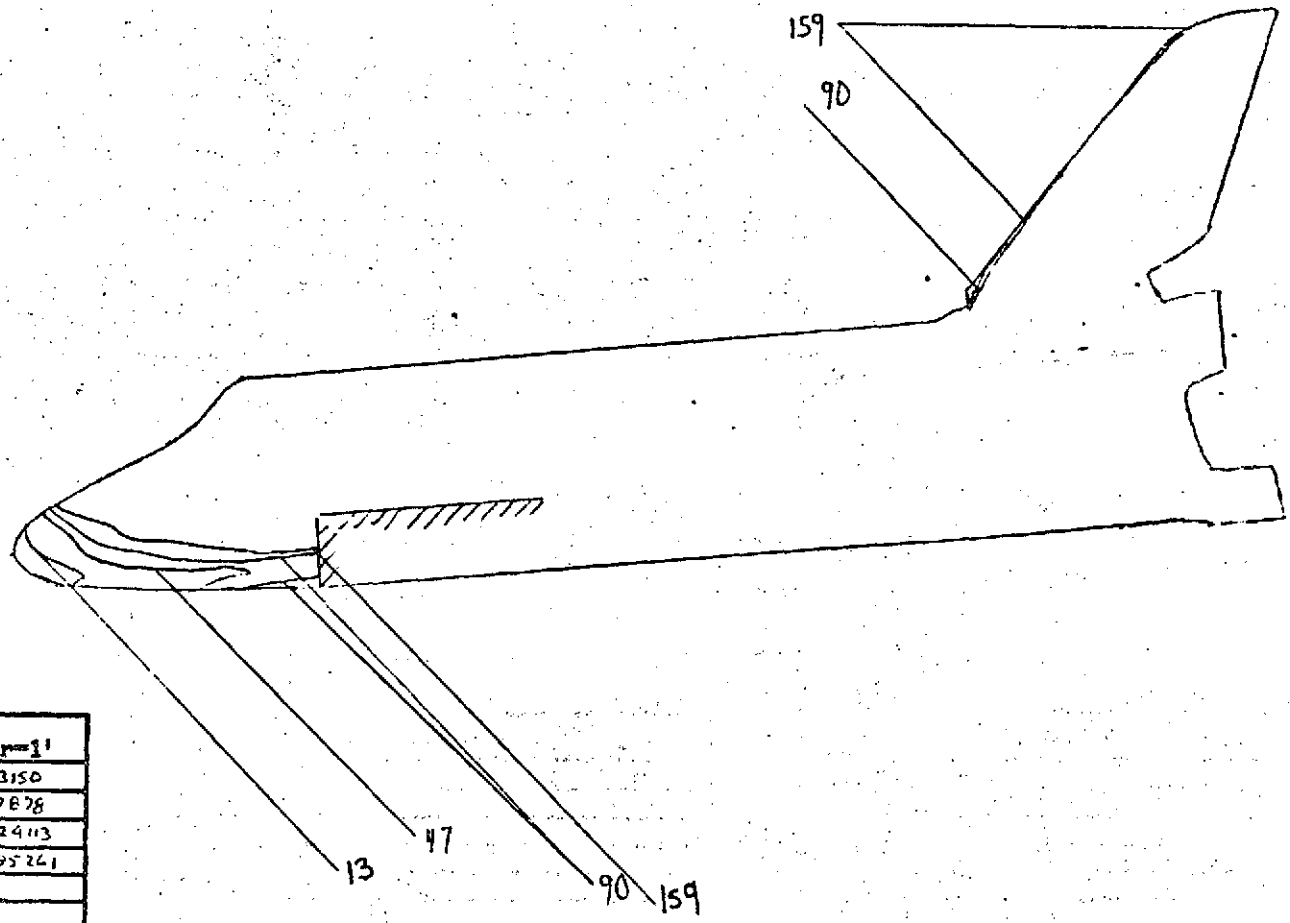

Isotherm	$h/h_{r=1}$
13	0.243150
47	0.127878
90	0.0924113
159	0.0695261

FIG. 141

CONFIG. 46-4ABF

LENGTH (ft) = .638

SCALE .00593

FACILITY LRC/UDT

TEST OH42B (RPA)

RUN 4154

M_∞ = 8

P_{total} (psi) = 160

T_{total} (°F) = 795

T_{aw}/T_{total} = 0.90

R_N per foot = 1×10^6

$T_{phase\ change}$ (°F) = 200

α = 30

β = 0

ϕ = 0

Camera Coordinates (from model center, x-axis parallel w/ stream, + downstream)

x (in) =

y (in) =

z (in) =

[illegible]

HS = 0.0395666 $\frac{BTU}{FT^2}$ - SEC - °F

HVD-EVCS

NASA Langley (Feb. 1971)

PHASE CHANGE TEST

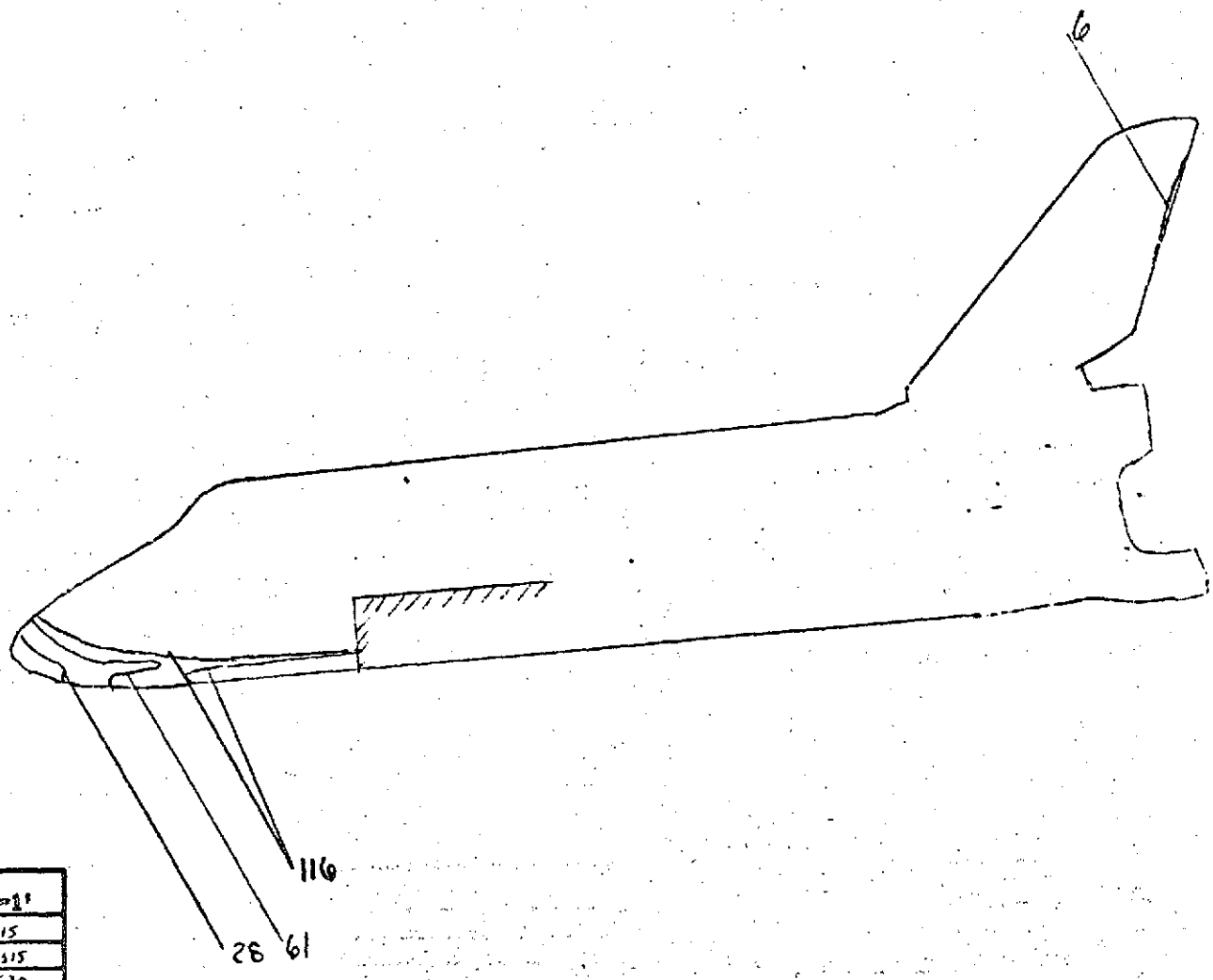

Isotherm	h/h_{ref}
6	0.661715
28	0.306515
61	0.267530
116	0.150493

FIG. 142

CONFIG. 46-4ABF

LENGTH (ft) = .638

SCALE .00593

FACILITY LRC/UDT

TEST 0H42B (RPA)

RUN 4155

M_∞ = 8

P_{total} (psi) = 630

T_{total} (°F) = 910

T_{aw}/T_{total} = 0.90

R_N per foot = 3×10^6

$T_{phase\ change}$ (°F) = 400

α = 30

β = 0

ϕ = 0

Camera Coordinates (from model center, x-axis parallel w/ stream, + downstream)

x (in) =

y (in) =

z (in) =

Ref: [illegible]

$HS = 0.073362 \frac{BTU}{Ft^2 - sec - °R}$

PHASE CHANGE TEST

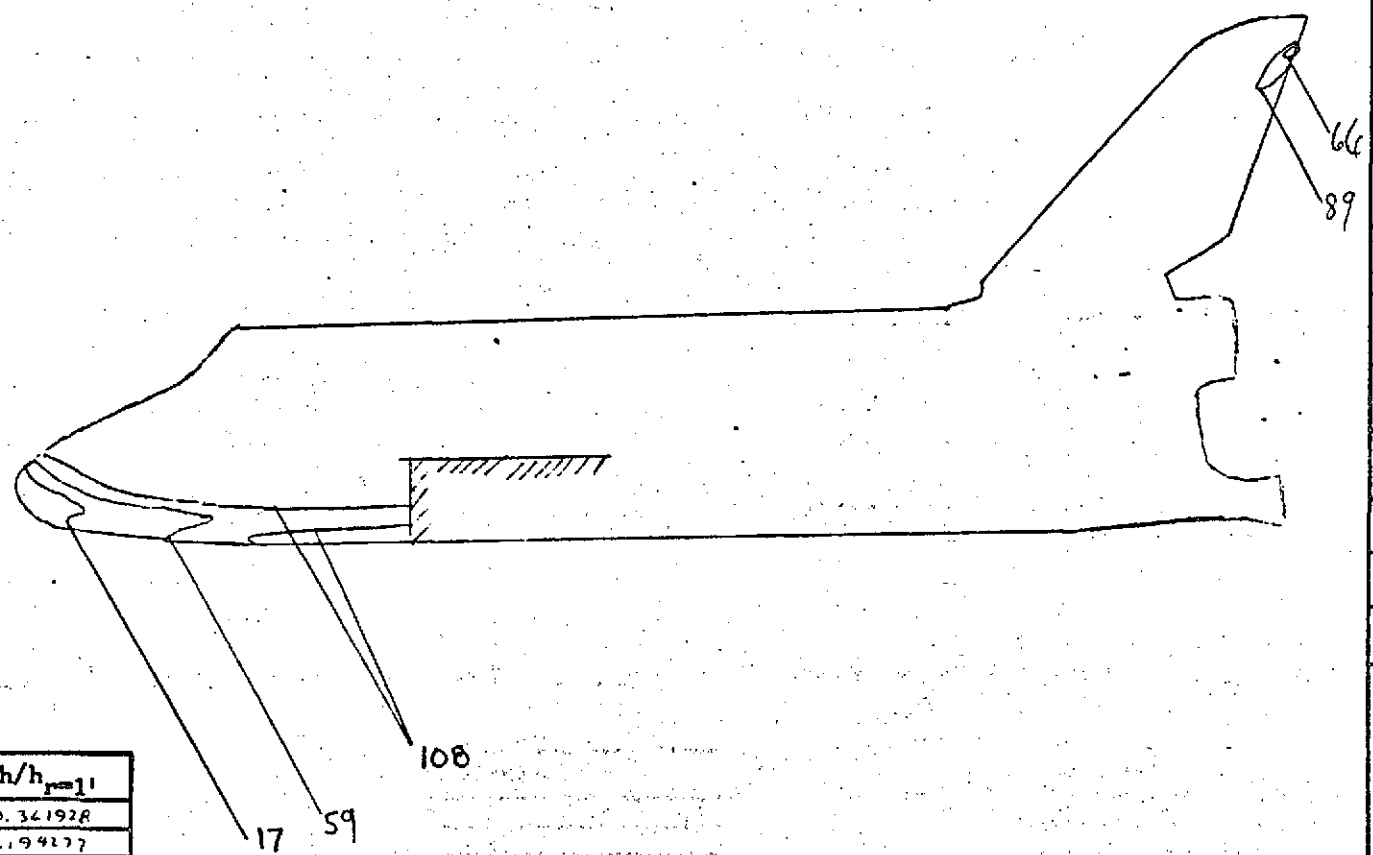

Isotherm	$h/h_{r=1}$
17	0.361928
59	0.194277
66	0.183686
89	0.158180
108	0.143594

FIG. 143

CONFIG. 46-4ABF

LENGTH (ft) = .638

SCALE .00593

FACILITY LRC/UDT

TEST OH42B (RPA)

RUN 4156

M_∞ = 8

P_{total} (psi) = 1385

T_{total} (°F) = 915

T_{aw}/T_{total} = 0.90

R_N per foot = 6×10^6

$T_{phase\ change}$ (°F) = 450

α = 30

β = 0

ϕ = 0

Camera Coordinates (from model center, x-axis parallel w/ stream, + downstream)

x (in) =

y (in) =

z (in) =

Reference & conditions 6

HS = 0.104761 $\frac{BTU}{FT^2}$ - sec - °F

NASA Langley (Feb. 1971)

PHASE CHANGE TEST

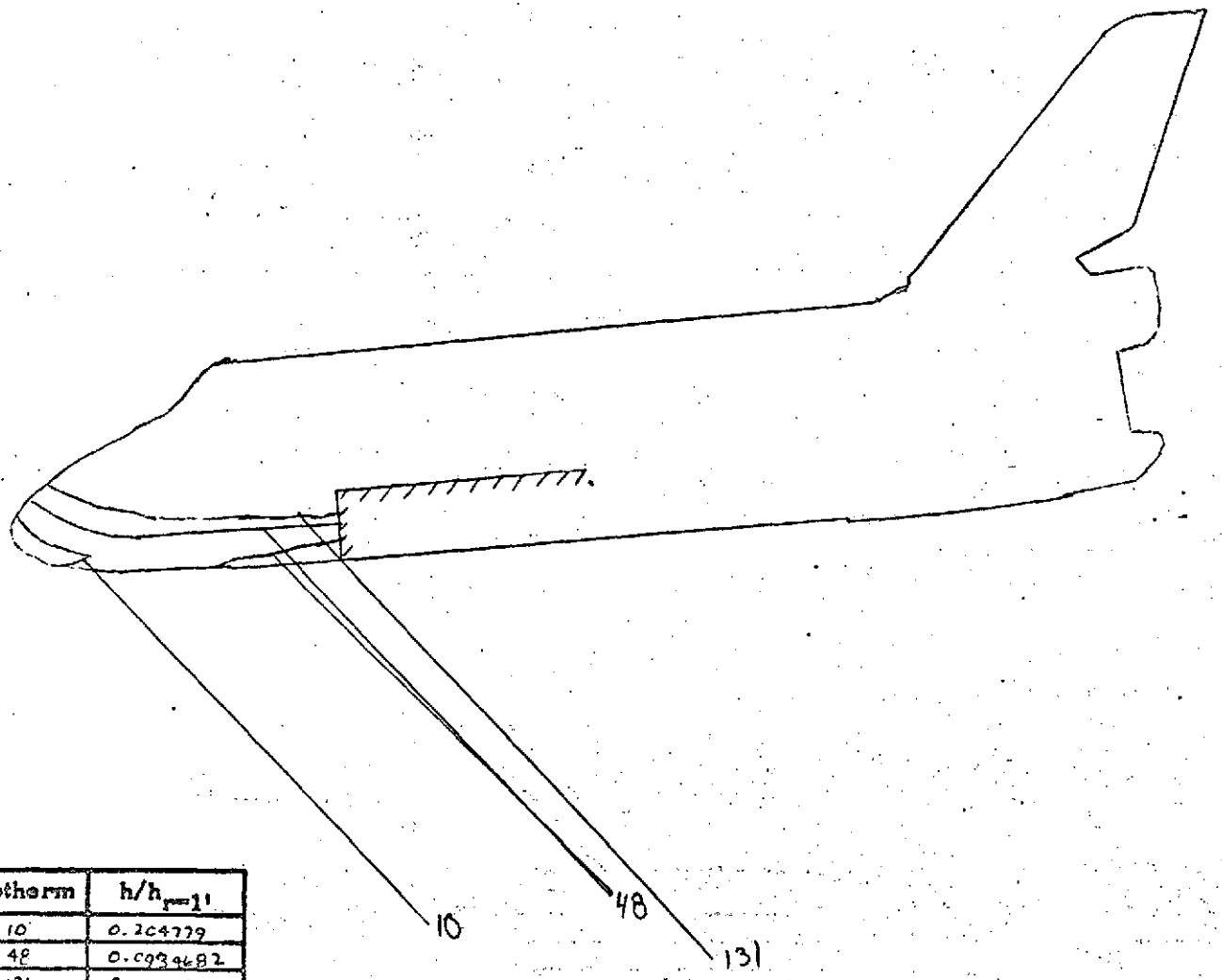

Isotherm	$h/h_{r=11}$
10	0.2C4779
48	0.C93482
131	0.C545782

FIG. 144

CONFIG. 46-1

LENGTH (ft) = .638

SCALE .00593

FACILITY LRC/VDT

TEST OH42B (RPA)

RUN 458

M_∞ = 8

P_{total} (psi) = 163

T_{total} (°F) = 780

T_{aw}/T_{total} = 0.90

R_N per foot = 1×10^6

$T_{phase\ change}$ (°F) = 175

α = 30

β = 0

ϕ = 0

Camera Coordinates (from model center, x-axis parallel w/ stream, + downstream)

x (in) =

y (in) =

z (in) =

HS = 0.0397758 $\frac{BTU}{Ft^2}$ -sec-°F

HVD-EVCS

PHASE CHANGE TEST

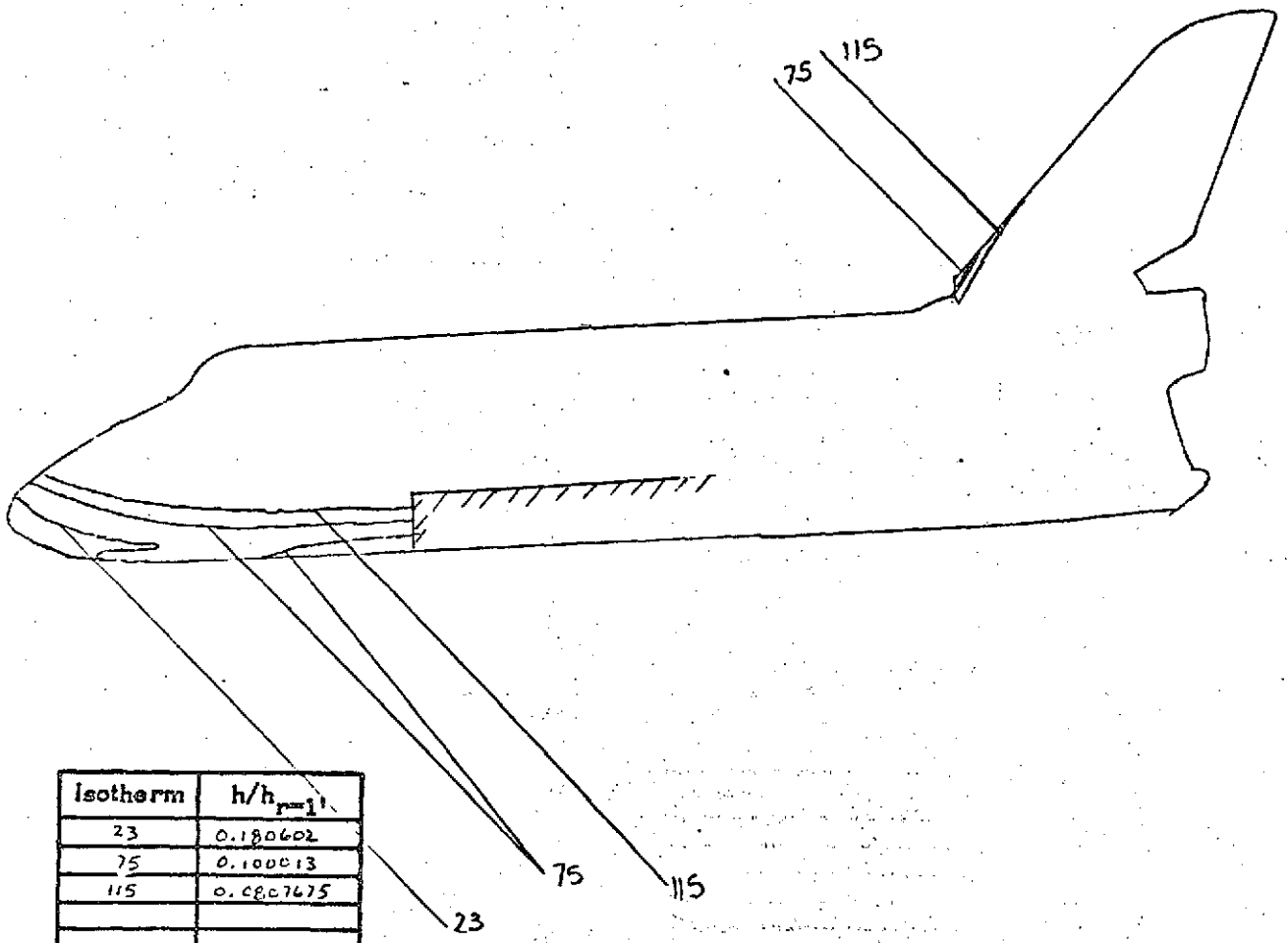

Isotherm	$h/h_{r=1}$
23	0.180602
75	0.100013
115	0.0807675

FIG. 145

CONFIG. 46-3

LENGTH (ft) = .638

SCALE .00593

FACILITY LRC/UDT

TEST OH42B (RPA)

RUN 4159

M_∞ = 8

P_{total} (psi) = 620

T_{total} (°F) = 920

T_{aw}/T_{total} = 0.90

R_N per foot = 3×10^6

$T_{phase\ change}$ (°F) = 300

α = 30

β = 0

ϕ = 0

Camera Coordinates (from model center, x-axis parallel w/ stream, + downstream)

x (in) =

y (in) =

z (in) =

Reached ℄ - Figure 6

HS = 0.0726060 $\frac{BTU}{FT^2}$ - SEC - °F

PHASE CHANGE TEST

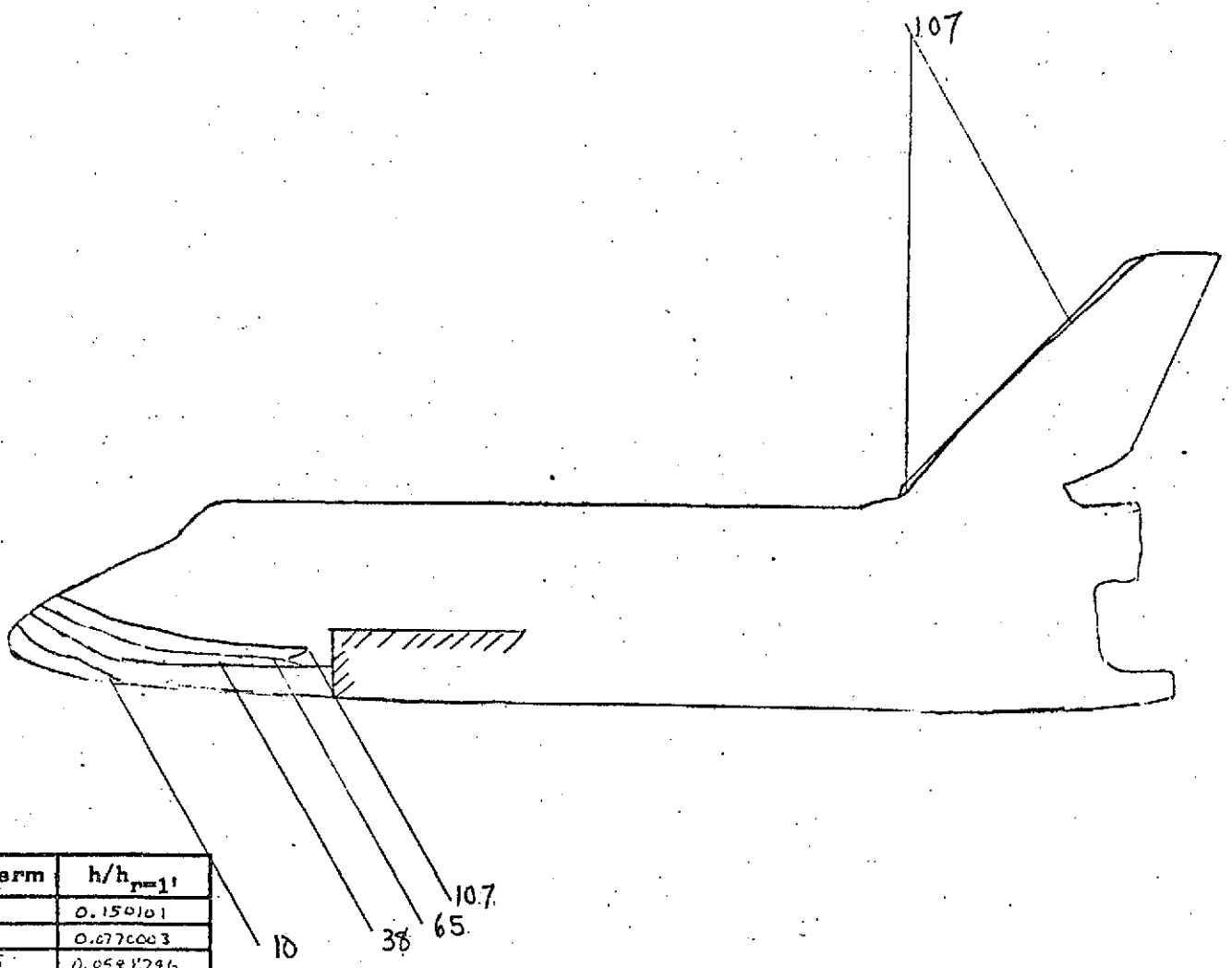

Isotherm	$h/h_{r=1'}$
10	0.150101
38	0.077C003
65	0.058E796
107	0.045HB73

FIG. 146

CONFIG. 46-1

LENGTH (ft) = .638

SCALE .00593

FACILITY LRC/VDT

TEST OH42B (RPA)

RUN 4160

M_∞ = 8

P_{total} (psi.) = 160

T_{total} (°F) = 805

T_{aw}/T_{total} = 0.90

R_N per foot = 1 x 10^6

$T_{phase\ change}$ (°F) = 156

α = 30

β = 0

ϕ = 0

Camera Coordinates (from model center, x-axis parallel w/ stream, + downstream)

x (in) =

y (in) =

z (in) =

Reduced to Frame 6
HS = 0.0395039 $\frac{BTU}{FT^2 - SEC - °F}$
NDS

PHASE CHANGE TEST

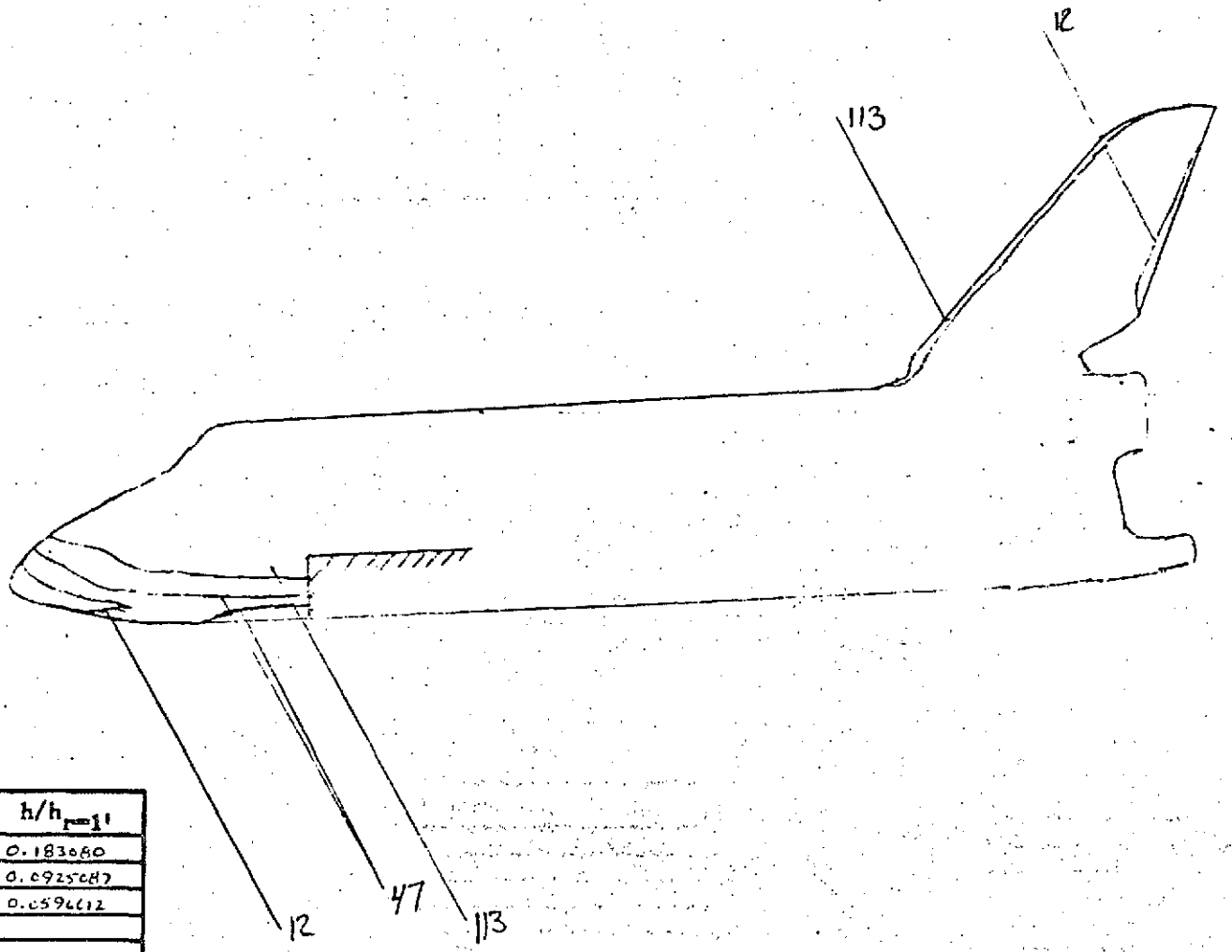

Isotherm	$h/h_{r=1'}$
12	0.183080
47	0.0925087
113	0.0596612

FIG. 147

CONFIG. 46-3

LENGTH (ft) = .638

SCALE .00593

FACILITY LRC/VDT

TEST OH42B (RPA)

RUN 4161

M_∞ = 8

P_{total} (psi) = 165

T_{total} (°F) = 800

T_{aw}/T_{total} = 0.90

R_N per foot = 1×10^6

$T_{phase\ change}$ (°F) = 175

α = 30

β = 0

ϕ = 0

Camera Coordinates (from model center, x-axis parallel w/ stream, + downstream)

x (in) =

y (in) =

z (in) =

Reading & Conference

HS = 0.0400474 $\frac{BTU}{FT^2}$-SEC-°F

PHASE CHANGE TEST

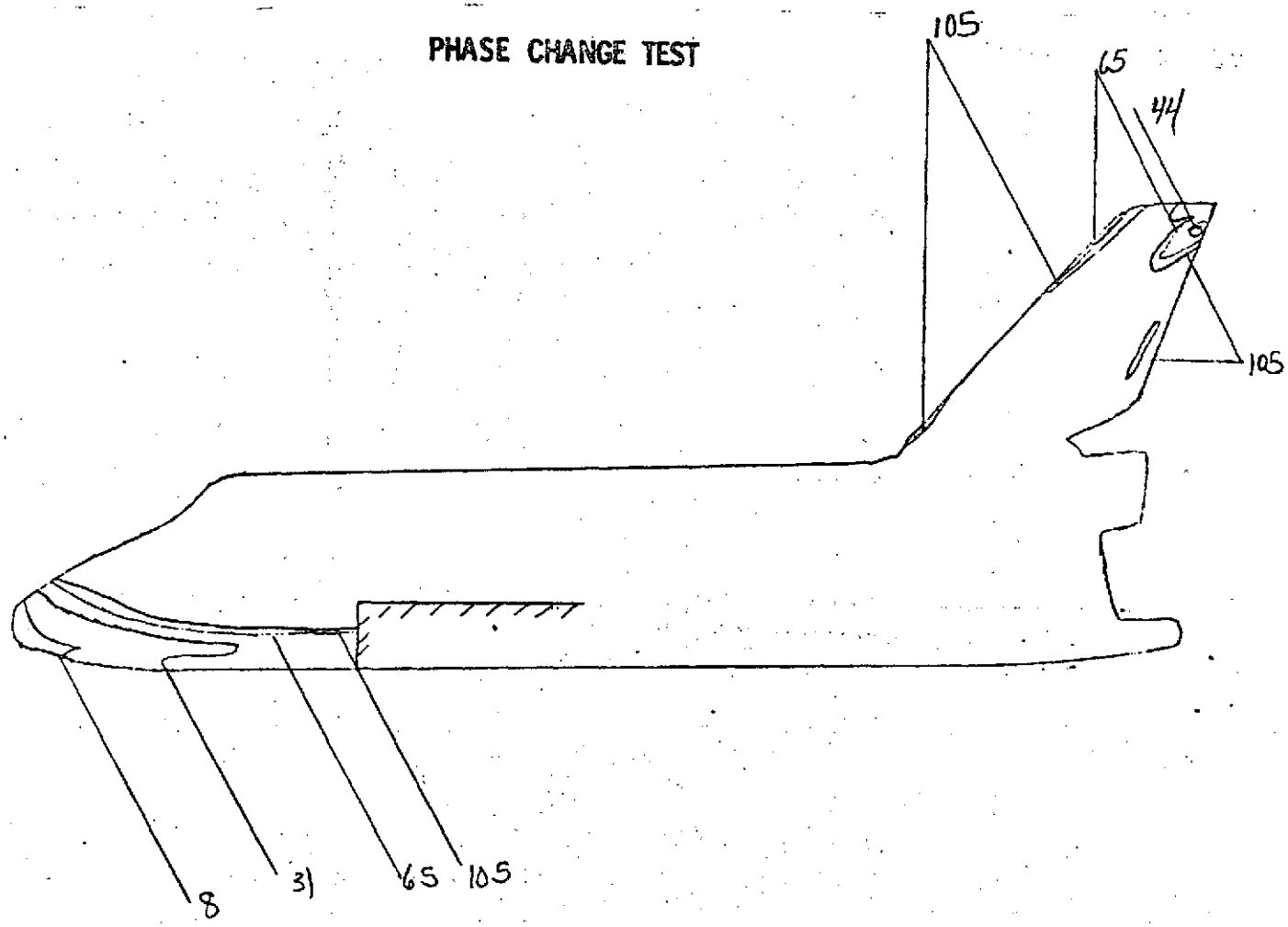

Isotherm	$h/h_{r=1'}$
8	0.295914
31	0.150324
44	0.126178
65	0.103413
105	0.0816799

FIG. 148

CONFIG. 46-1

LENGTH (ft) = .638

SCALE .00593

FACILITY LRC/VDT

TEST OH42B (RPA)

RUN 4162

M_∞ = 8

P_{total} (psi) = 1385

T_{total} (°F) = 915

T_{aw}/T_{total} = 0.90

R_N per foot = 6×10^6

$T_{phase\ change}$ (°F) = 350

α = 30

β = 0

ϕ = 0

Camera Coordinates (from model center, x-axis parallel w/ stream, + downstream)

x (in) =

y (in) =

z (in) =

$\mu_S = 0.104917 \frac{BTU}{FT^2 - Sec - °F}$

HVD-EVCS

PHASE CHANGE TEST

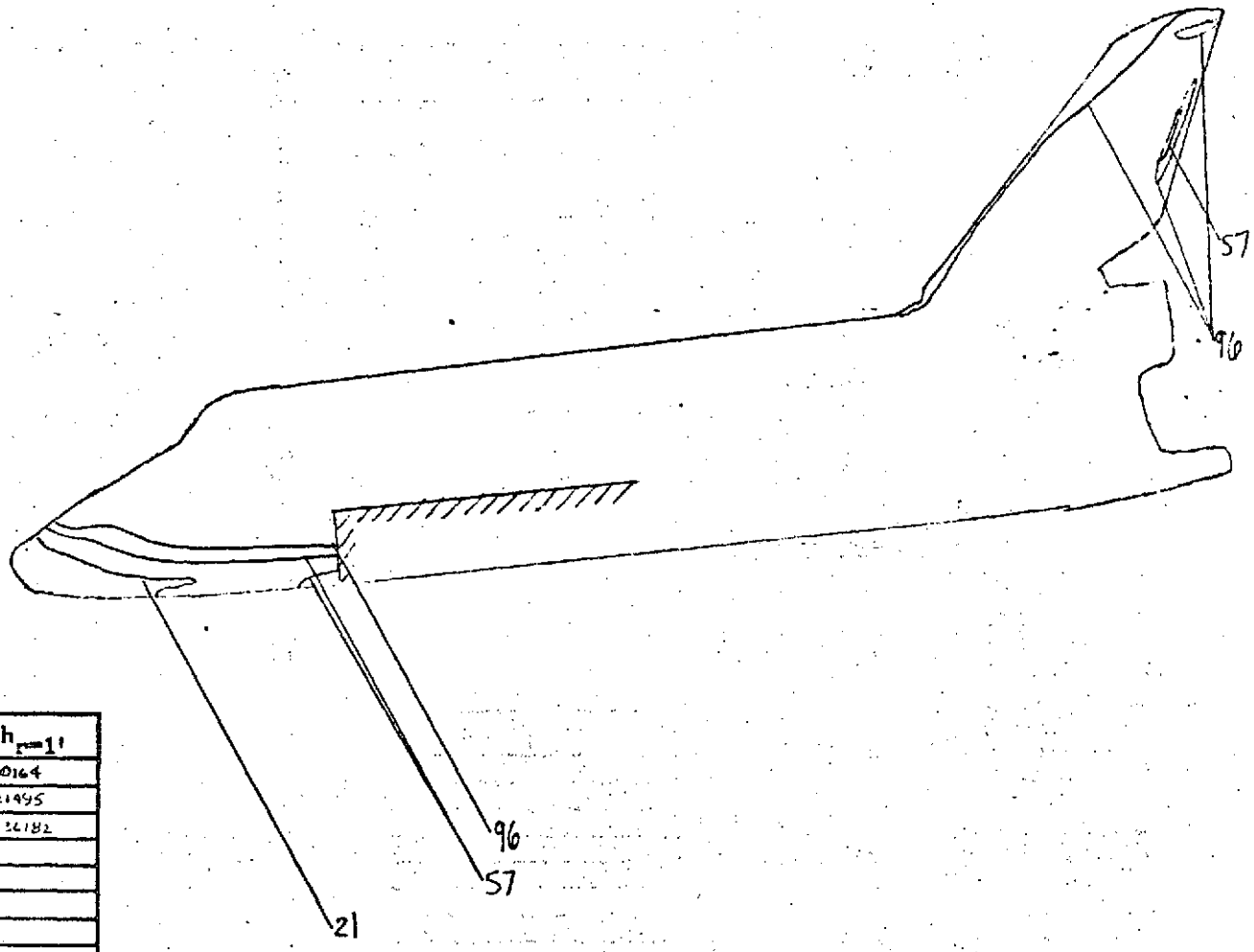

Isotherm	$h/h_{r=1}$
21	0.200164
57	0.121495
96	0.092182

FIG. 149

CONFIG. 46-3

LENGTH (ft) = .638

SCALE .00593

FACILITY LRC/UDT

TEST OH42B (RPA)

RUN 4163

M_∞ = 8

P_{total} (psi) = 1385

T_{total} (°F) = 870

T_{aw}/T_{total} = 0.90

R_N per foot = 6×10^6

$T_{phase\ change}$ (°F) = 350

α = 30

β = 0

ϕ = 0

Camera Coordinates (from model center, x-axis parallel w/ stream, + downstream)

x (in) =

y (in) =

z (in) =

$H_S = 0.104562$ $\frac{BTU}{FT^2 - SEC - °F}$

PHASE CHANGE TEST

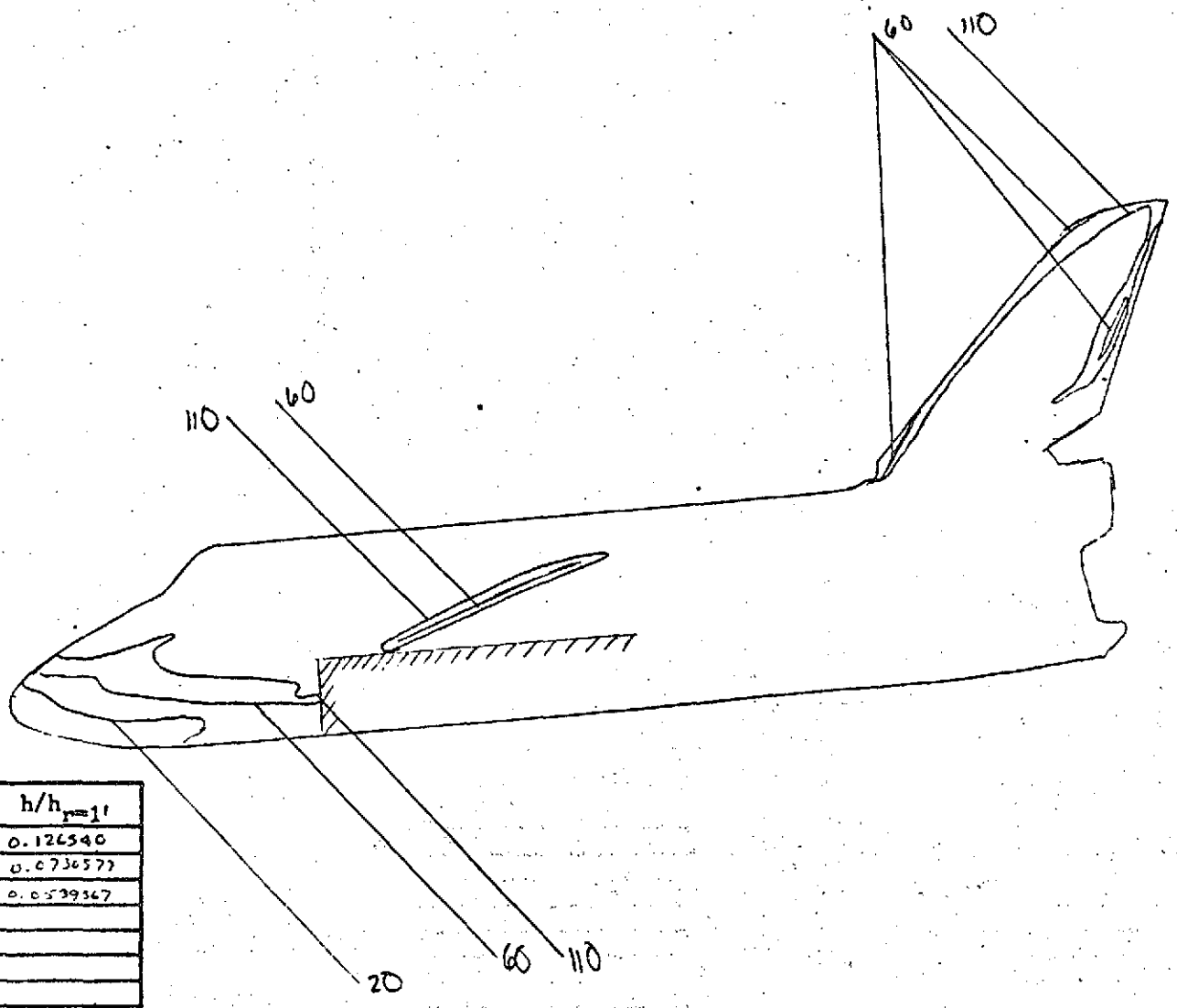

Isotherm	$h/h_{r=1'}$
20	0.126540
60	0.0730577
110	0.0539367

FIG. 150

CONFIG. 46-3

LENGTH (ft) = .638

SCALE .00593

FACILITY LRC/UDT

TEST OH42B (RPA)

RUN 4164

M_∞ = 8

P_{total} (psi) = 635

T_{total} (°F) = 955

T_{aw}/T_{total} = 0.90

R_N per foot = 3×10^6

$T_{phase\ change}$ (°F) = 250

α = 30

β = 0

ϕ = 0

Camera Coordinates (from model center, x-axis parallel w/ stream, + downstream)

x (in) =

y (in) =

z (in) =

Reached ¢ on Frame 6

HS = 0.0739873 $\frac{BTU}{FT^2}$-SEC-°F

NASA Langley (Feb. 1971)

HVD-EVCS

PHASE CHANGE TEST

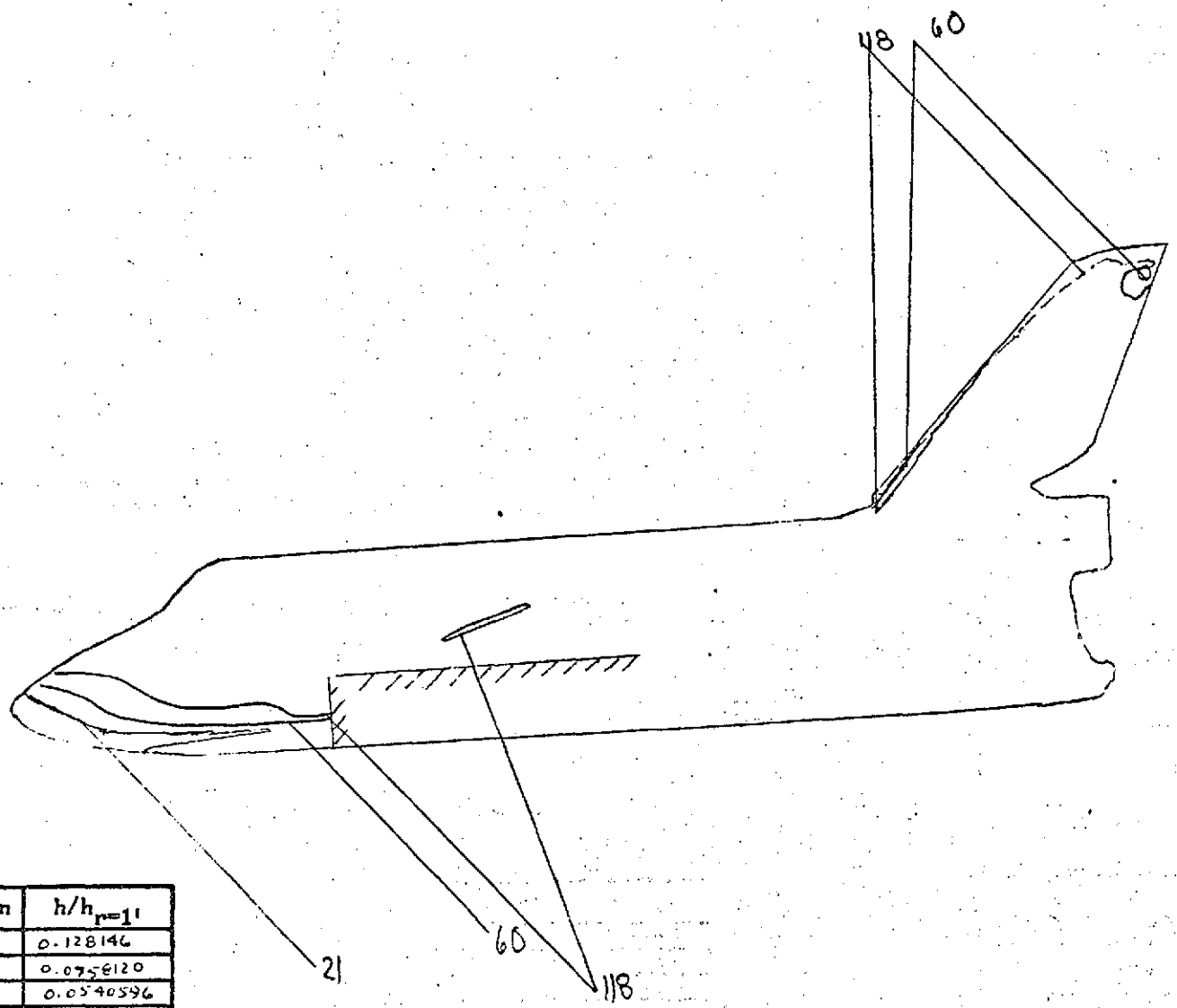

Isotherm	$h/h_{r=1'}$
21	0.128146
60	0.075e120
118	0.0540596

FIG. 151

CONFIG. 46-1

LENGTH (ft) = .638

SCALE .00593

FACILITY LRC/UDT

TEST OH42B (RPA)

RUN 4165

M_∞ = 8

P_{total} (psi) = 640

T_{total} (°F) = 930

T_{aw}/T_{total} = 0.90

R_N per foot = 3×10^6

$T_{phase\ change}$ (°F) = 250

α = 30

β = 0

ϕ = 0

Camera Coordinates (from model center, x-axis parallel w/ stream, + downstream)

x (in) =

y (in) =

z (in) =

NS = 0.0736175 $\frac{BTU}{FT^2 - SEC - °F}$

PHASE CHANGE TEST

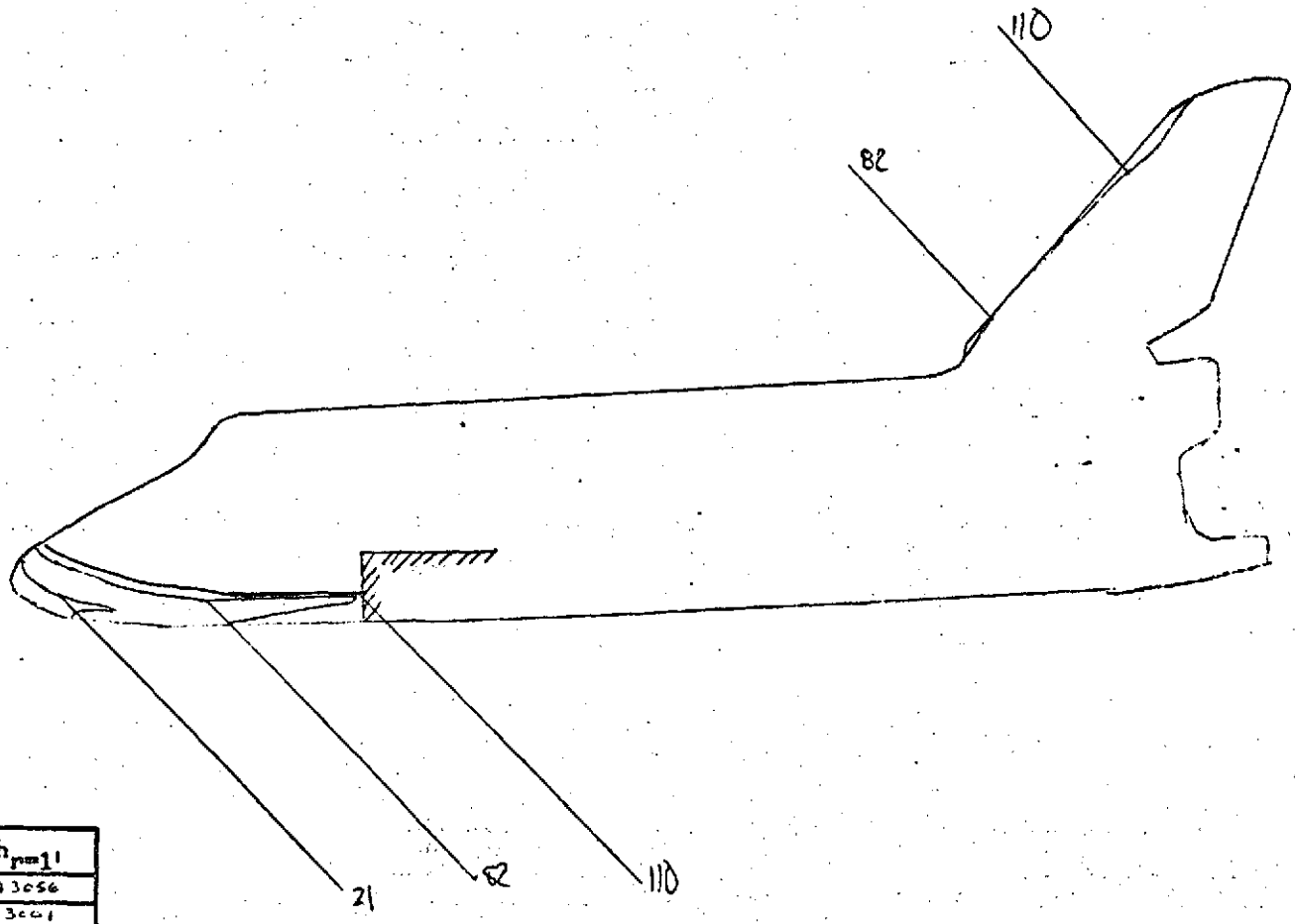

Isotherm	$h/h_{r=1'}$
21	c. 243c56
82	0.123c41
110	0.104199

FIG. 152

CONFIG. 46-3

LENGTH (R) = .638

SCALE .00593

FACILITY LRC/UDT

TEST OH42B (CPA)

RUN 4166

M_∞ = 8

P_{total} (psi) = 1390

T_{total} (°F) = 920

T_{aw}/T_{total} = 0.90

R_N per foot = 6×10^6

$T_{phase\ change}$ (°F) = 400

α = 30

β = 0

ϕ = 0

Camera Coordinates (from model center, x-axis parallel w/ stream, + downstream)

x (in) =

y (in) =

z (in) =

HS = 0.165068 $\frac{Btu}{ft^2}$ - sec - °F

PHASE CHANGE TEST

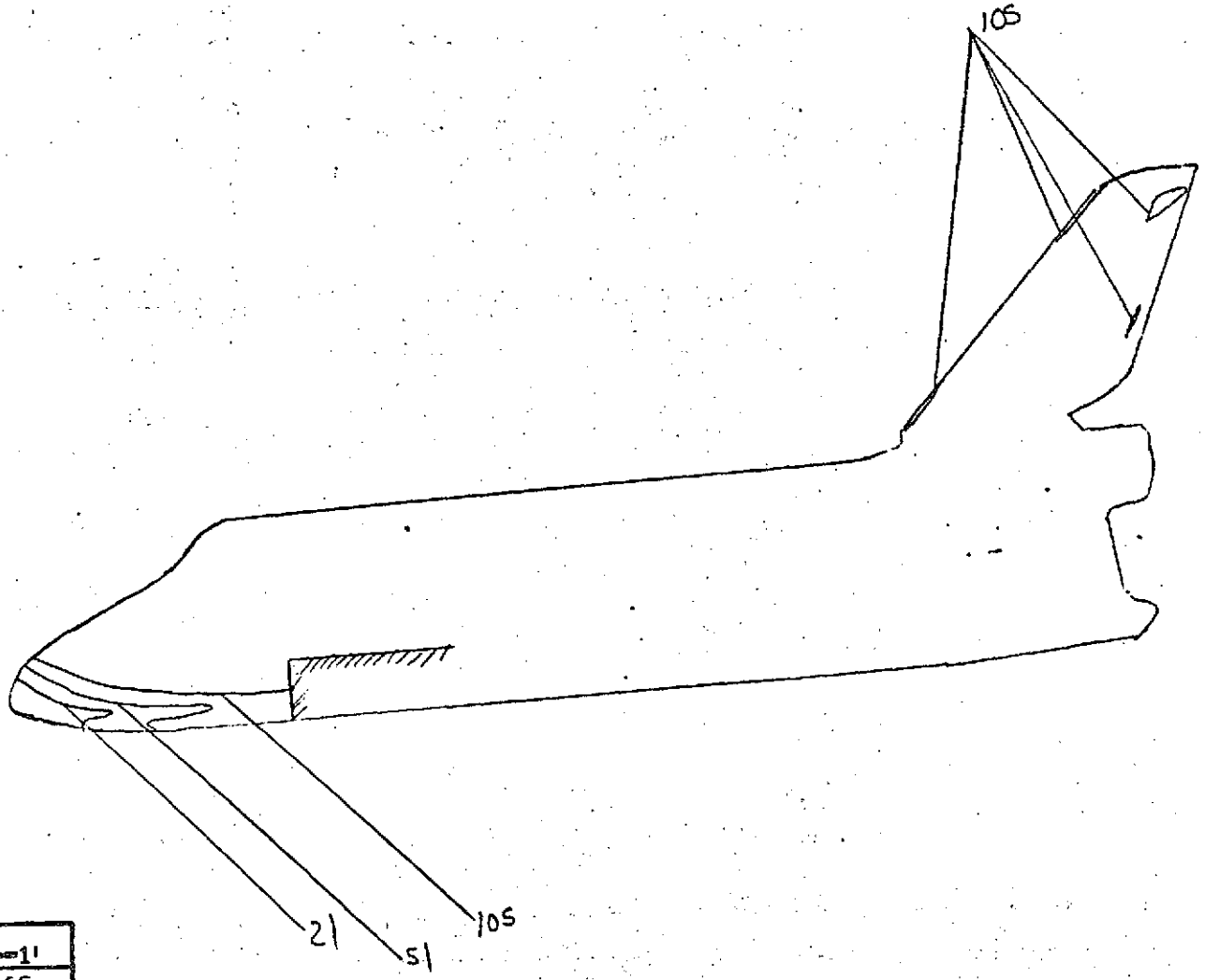

Isotherm	$h/h_{r=1}$
21	0.245155
51	0.157313
105	0.109437

FIG. 153

CONFIG. 46-1

LENGTH (ft) =	.638
SCALE	.00593
FACILITY	LRC/UDT
TEST	OH42B (RPM)
RUN	4167
M_∞ =	8
P_{total} (psi) =	1625
T_{total} (°F) =	885
T_{aw}/T_{total} =	0.90
R_N per foot =	7×10^6
$T_{phase\ change}$ (°F) =	400
α =	30
β =	0
ϕ =	0

Camera Coordinates (from model center, x-axis parallel w/ stream, + downstream)

x (in) =

y (in) =

z (in) =

$HS = 0.112654 \frac{BTU}{FT^2\text{-}SEC\text{-}°F}$

105

PHASE CHANGE TEST

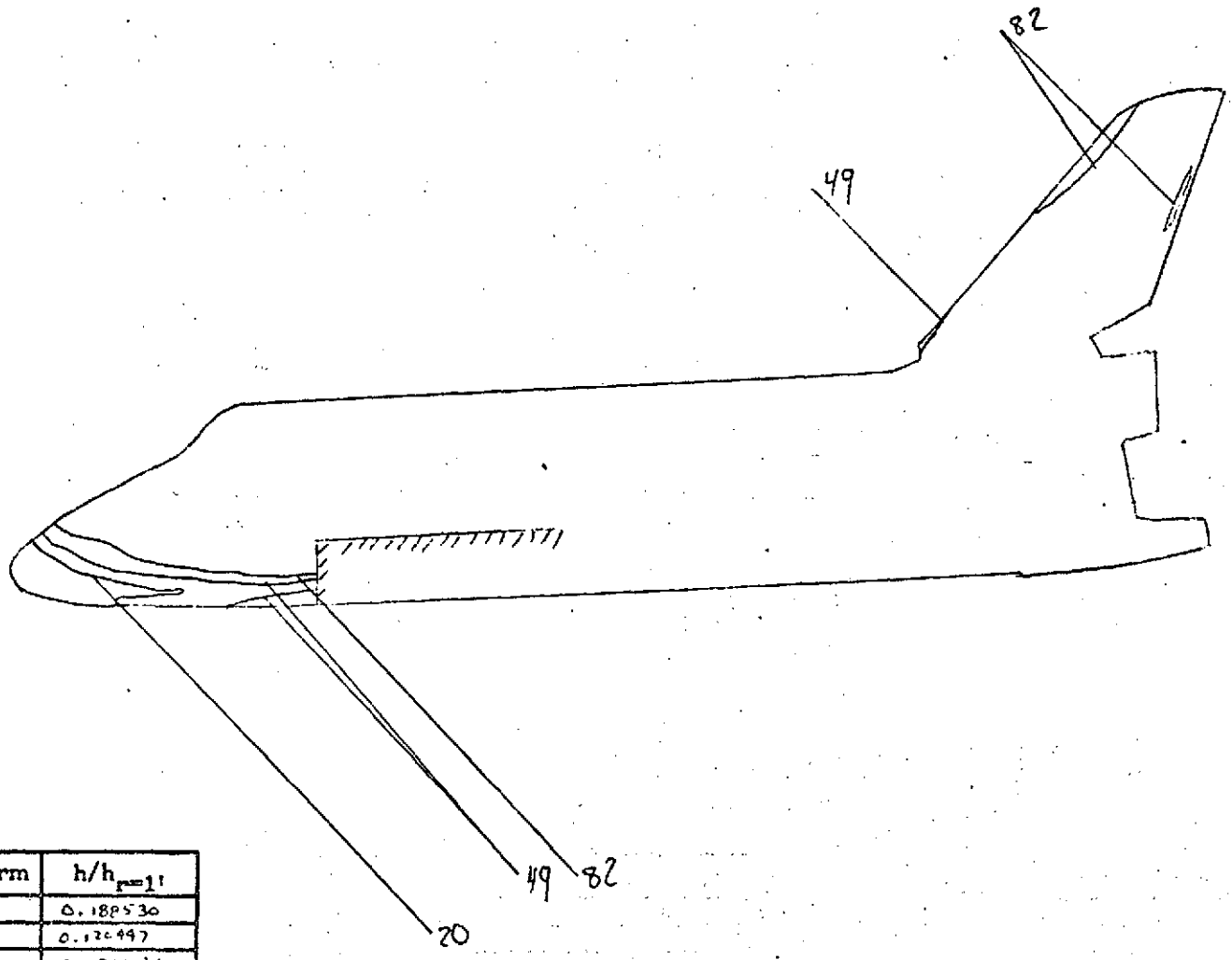

Isotherm	$h/h_{r=1}$
20	0.188530
49	0.120497
82	0.0931084

FIG. 154

CONFIG. 46-3

LENGTH (ft) = .638

SCALE .00593

FACILITY LRC/VDT

TEST OH42B (RPA)

RUN 4168

M_∞ = 8

P_{total} (psi) = 1930

T_{total} (°F) = 985

T_{aw}/T_{total} = 0.90

R_N per foot = 8×10^6

$T_{phase\ change}$ (°F) = 400

α = 30

β = 0

ϕ = 0

Camera Coordinates (from model center, x-axis parallel w/ stream, + downstream)

x (in) =

y (in) =

z (in) =

[illegible] 6

HS = 0.122902 $\frac{BTU}{FT^2}$ - SEC - °F

NDS

A. Langley (Feb. 1971)

HVD-EVCS

PHASE CHANGE TEST

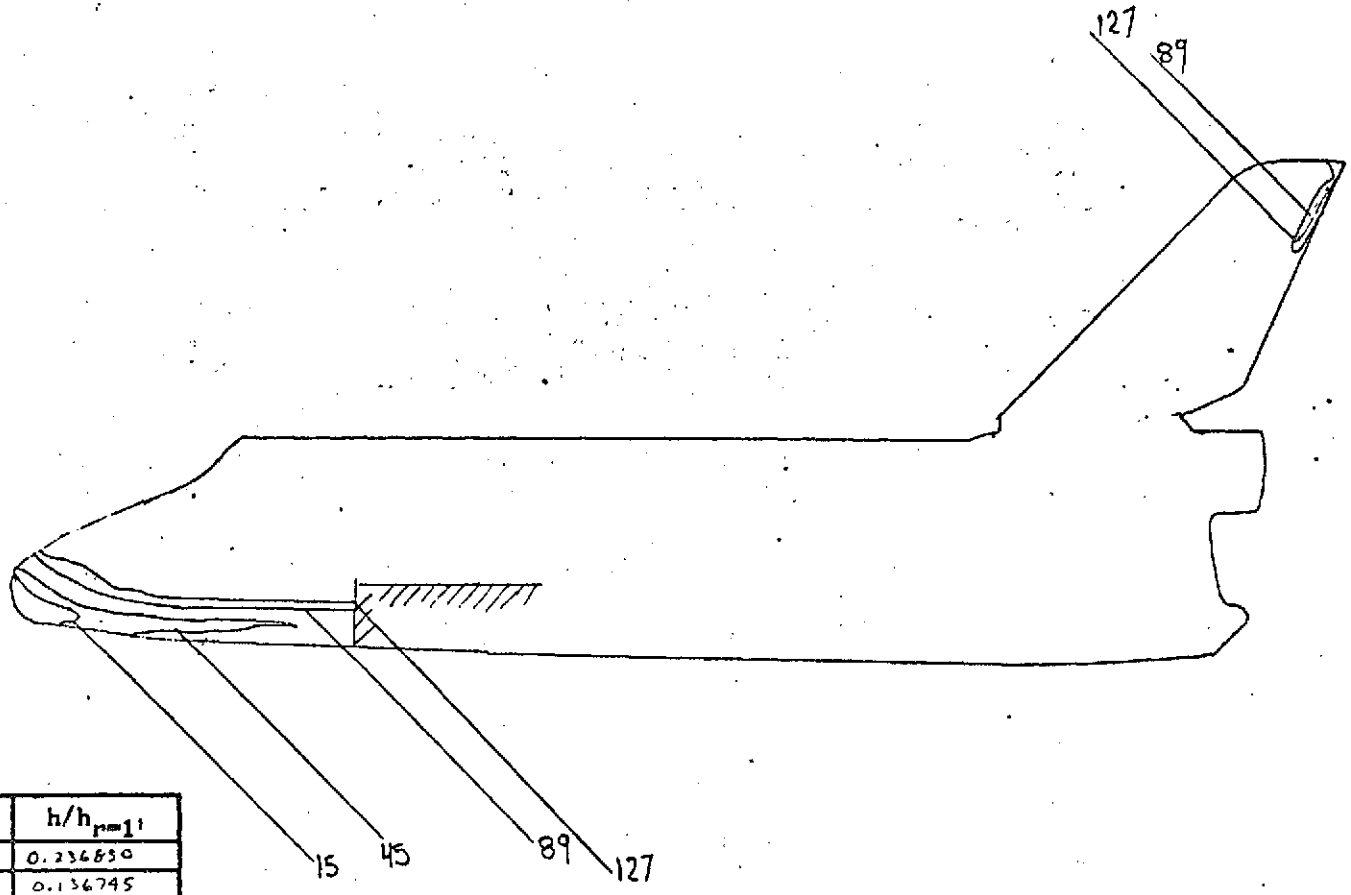

Isotherm	$h/h_{r=1}$
15	0.236850
45	0.136745
89	0.072352
127	0.0213985

FIG. 155

CONFIG. 46-1

LENGTH (ft) = .638

SCALE .00593

FACILITY LRC/VDT

TEST OH42B (RPA)

RUN 4172

M_∞ = 8

P_{total} (psi) = 650

T_{total} (°F) = 886

T_{aw}/T_{total} = 0.90

R_N per foot = 3×10^6

$T_{phase\ change}$ (°F) = 300

α = 35

β = 0

ϕ = 0

Camera Coordinates (from model center, x-axis parallel w/ stream, + downstream)

x (in) =

y (in) =

z (in) =

HS = 0.0239861 $\frac{BTU}{FT^2\text{-SEC-}°F}$

PHASE CHANGE TEST

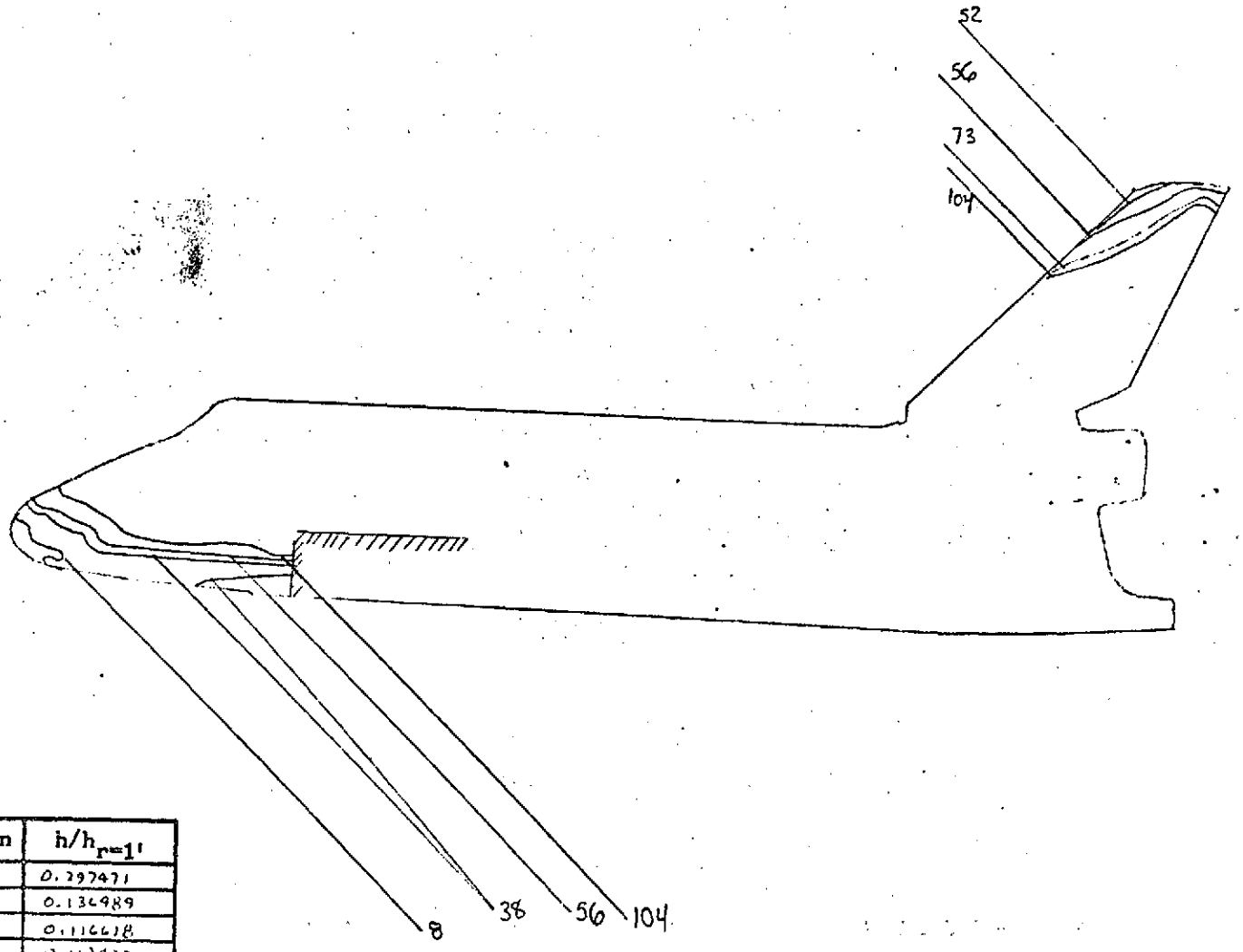

Isotherm	$h/h_{r=1'}$
8	0.397471
38	0.136489
52	0.116618
56	0.113433
73	0.094753
104	0.082535

FIG. 156

CONFIG. 46-2

LENGTH (ft) = .638

SCALE .00593

FACILITY LRC/UDT

TEST OH42B (RPA)

RUN 4173

M_∞ = 8

P_{total} (psi.) = 1390

T_{total} (°F) = 915

T_{aw}/T_{total} = 0.90

R_N per foot = 6×10^6

$T_{phase\ change}$ (°F) = 350

α = 35

β = 0

ϕ = 0

Camera Coordinates (from model center, x-axis parallel w/ stream, + downstream)

x (in) =

y (in) =

z (in) =

H_S = 0.10 5092 $\frac{BTU}{FT^2}$ - sec - °F

NASA Langley (Feb. 1971)

HVD-EVCS

PHASE CHANGE TEST

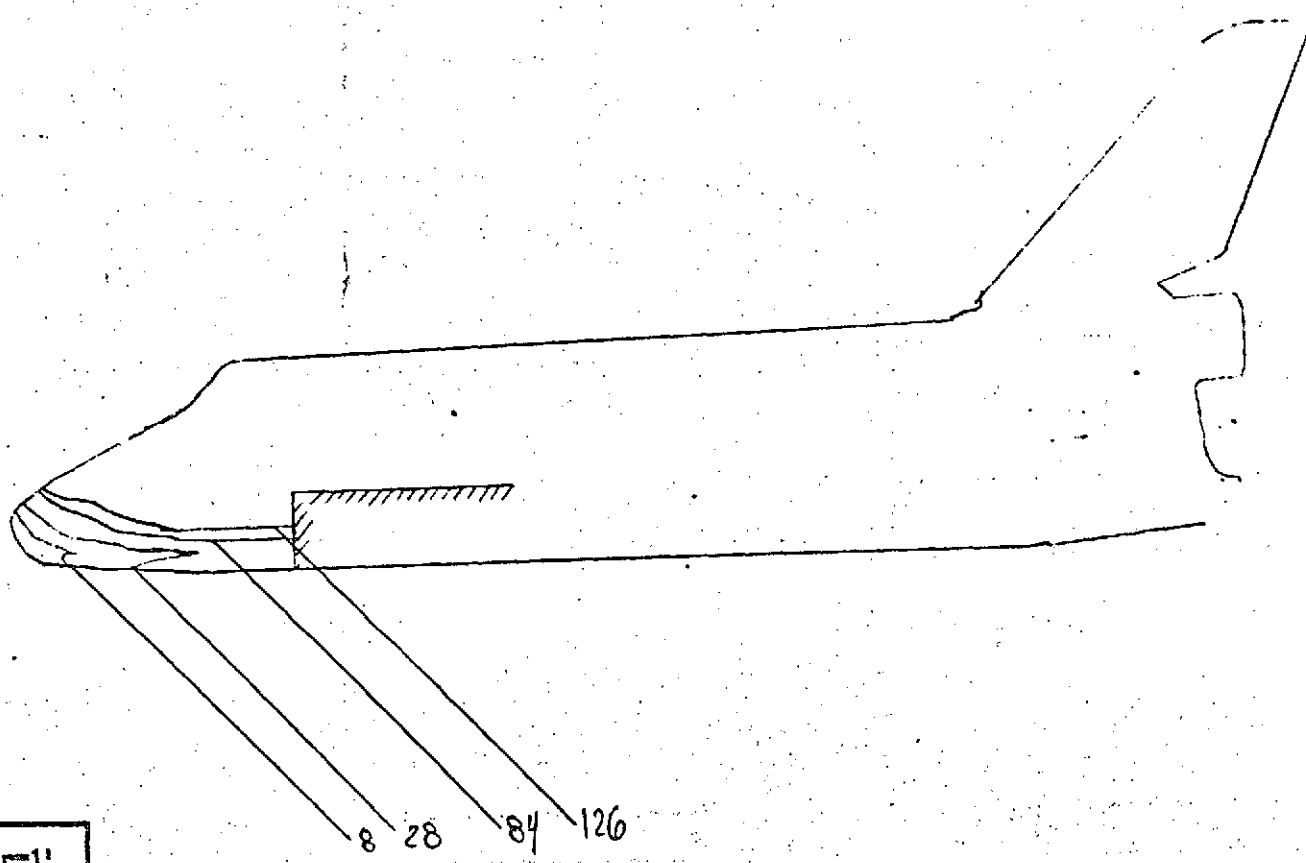

Isotherm	$h/h_{r=1}$
8	0.239508
28	0.128022
84	0.0739137
126	0.0603563

FIG. 157

CONFIG. 46-1

LENGTH (ft) = .638

SCALE .00593

FACILITY LRC/VDT

TEST OH42B (RPA)

RUN 4174

M_∞ = 8

P_{total} (psi) = 158

T_{total} (°F) = 780

T_{aw}/T_{total} = 0.90

R_N per foot = 1×10^6

$T_{phase\ change}$ (°F) = 175

α = 35

β = 0

ϕ = 0

Camera Coordinates (from model center, x-axis parallel w/ stream, + downstream)

x (in) =

y (in) =

z (in) =

$H_S = 0.0392405 \frac{BTU}{FT^3} - SEC - °R$

HVD-EVCS

PHASE CHANGE TEST

CONFIG. 46-1

LENGTH (ft) = .638

SCALE .00593

FACILITY LRC/VDT

TEST OH42B (RPA)

RUN 4175

M_∞ = 8

P_{total} (psi) = 1390

T_{total} (°F) = 935

T_{aw}/T_{total} = 0.90

R_N per foot = 6×10^6

$T_{phase\ change}$ (°F) = 400

α = 35

β = 0

ϕ = 0

Camera Coordinates (from model center, x-axis parallel w/ stream, + downstream)

x (in) =

y (in) =

z (in) =

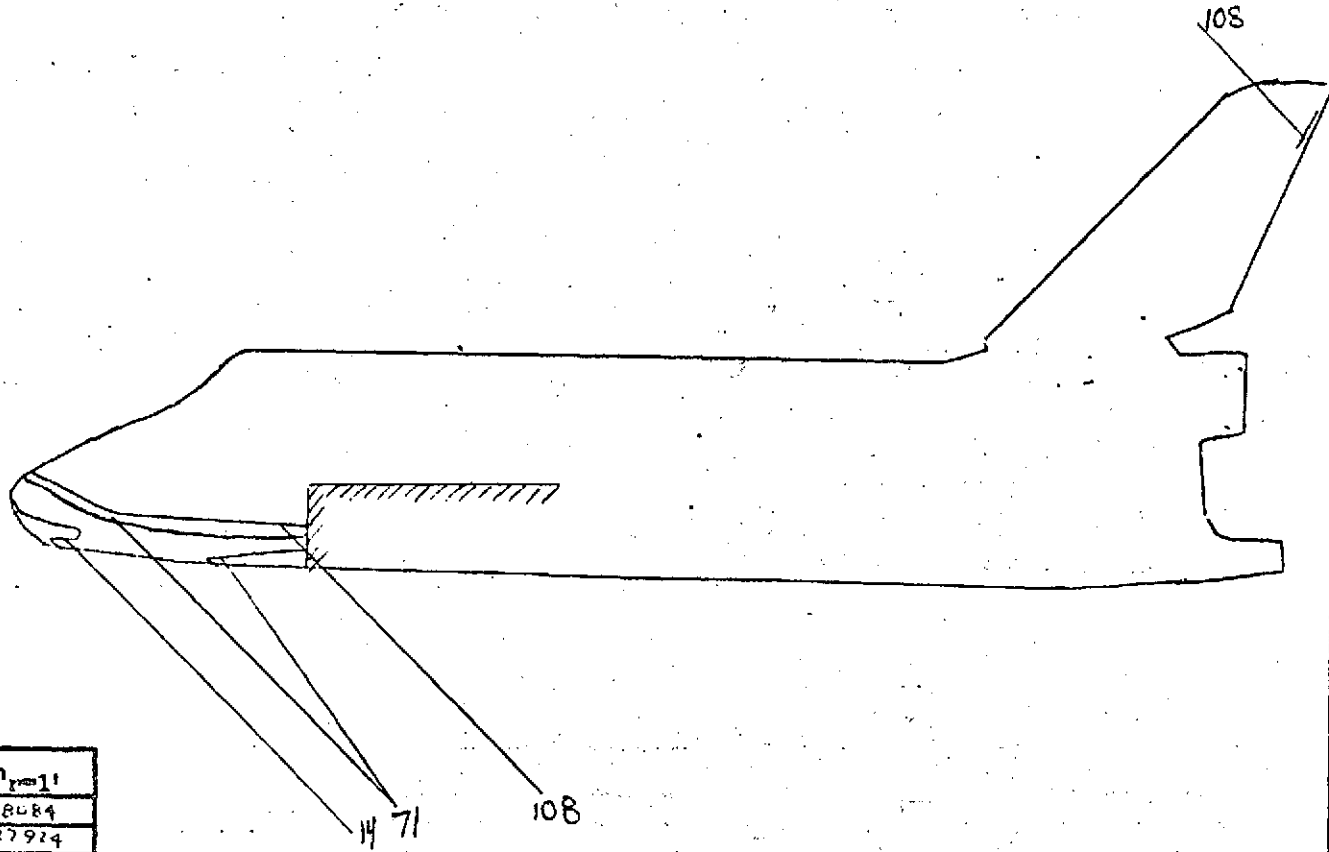

Isotherm	$h/h_{r=1'}$
14	0.288084
71	0.127924
108	0.103222

FIG. 158

HIT ? ON FRAME 6

HS = 0.105183 $\frac{Btu}{Ft^2 - Sec - °F}$

NOSE

PHASE CHANGE TEST

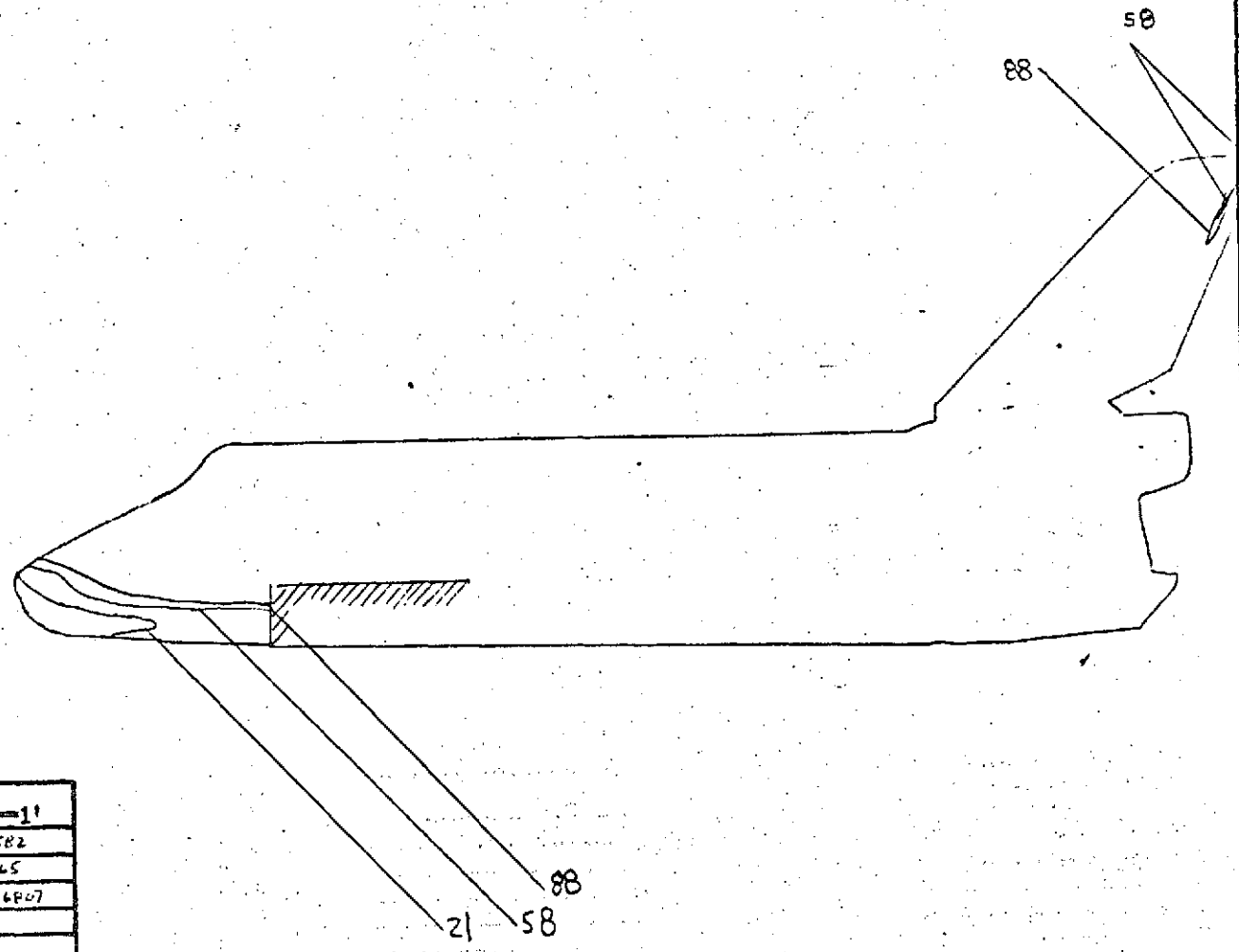

Isotherm	$h/h_{r=1}$
21	0.183582
58	0.110465
88	0.0896807

FIG. 159

CONFIG. 46-1

LENGTH (ft) = .638

SCALE .00593

FACILITY LRC/UDT

TEST OH42B (RPA)

RUN 4176

M_∞ = 8

P_{total} (psi) = 1380

T_{total} (°F) = 915

T_{aw}/T_{total} = 0.90

R_N per foot = 6×10^6

$T_{phase\ change}$ (°F) = 350

α = 35

β = 0

ϕ = 0

Camera Coordinates (from model center, x-axis parallel w/ stream, + downstream)

x (in) =

y (in) =

z (in) =

HIT ℄ ON FRAME 6

HS = 0.104792 $\frac{BTU}{FT^2}$ - sec - °F

UDS

HVD-EVCS

NASA Langley (Feb. 1971)

PHASE CHANGE TEST

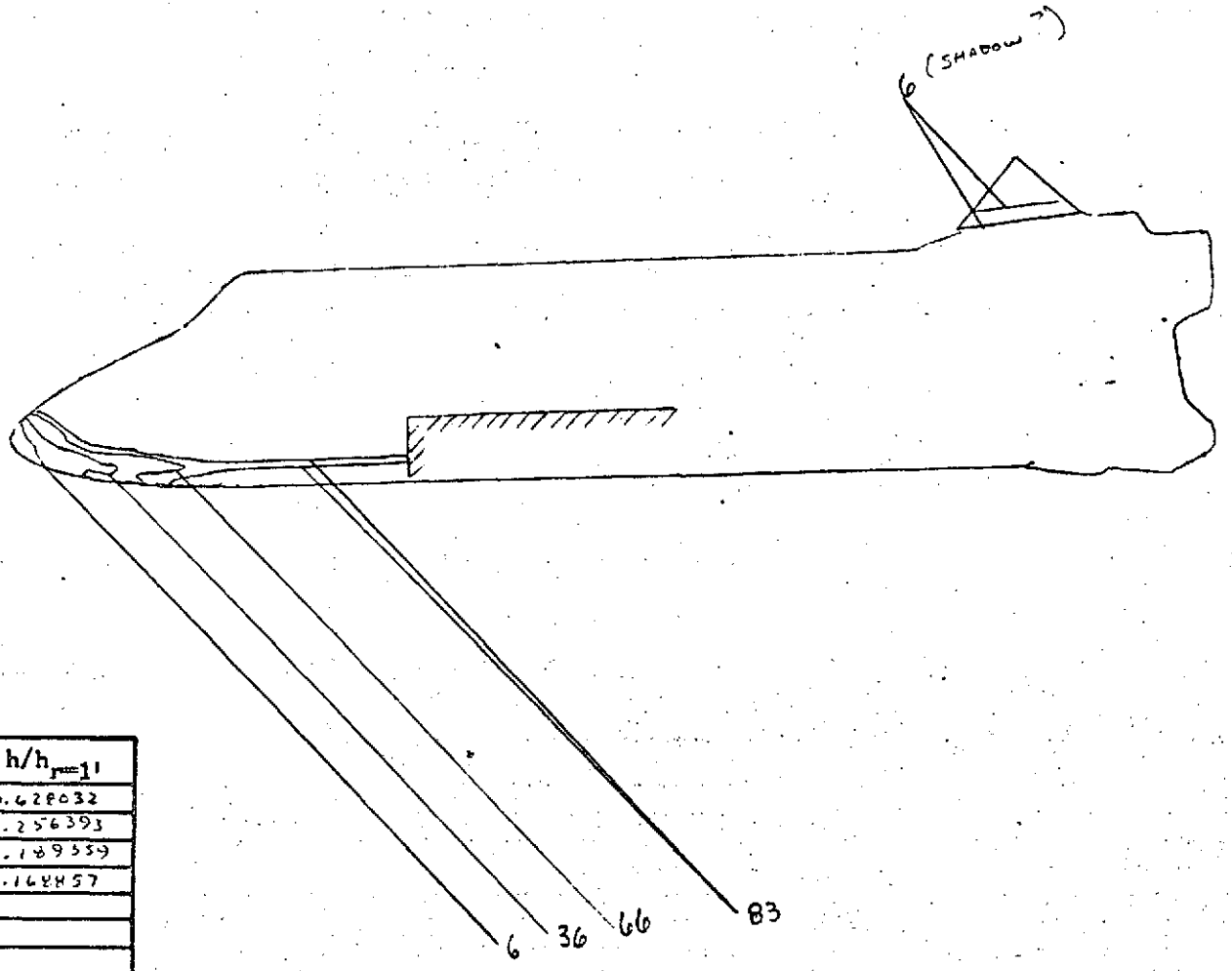

Isotherm	$h/h_{r=1}$
6	0.628032
36	0.256393
66	0.189359
83	0.168857

FIG. 160

CONFIG. 46-4EBF

LENGTH (ft) = .638

SCALE .00593

FACILITY LRC/VDT

TEST OH42B (RPA)

RUN 4177

M_∞ = 8

P_{total} (psi) = 625

T_{total} (°F) = 940

T_{aw}/T_{total} = 0.90

R_N per foot = 3×10^6

$T_{phase\ change}$ (°F) = 400

α = 30

β = 0

ϕ = 0

Camera Coordinates (from model center, x-axis parallel w/ stream, + downstream)

x (in) =

y (in) =

z (in) =

HITS ON FRAME 8

HS = 0.0729429 $\frac{BTU}{FT^2}$ - SEC-°F

EVD-EVCS

NASA Langley (Feb. 1971)

PHASE CHANGE TEST

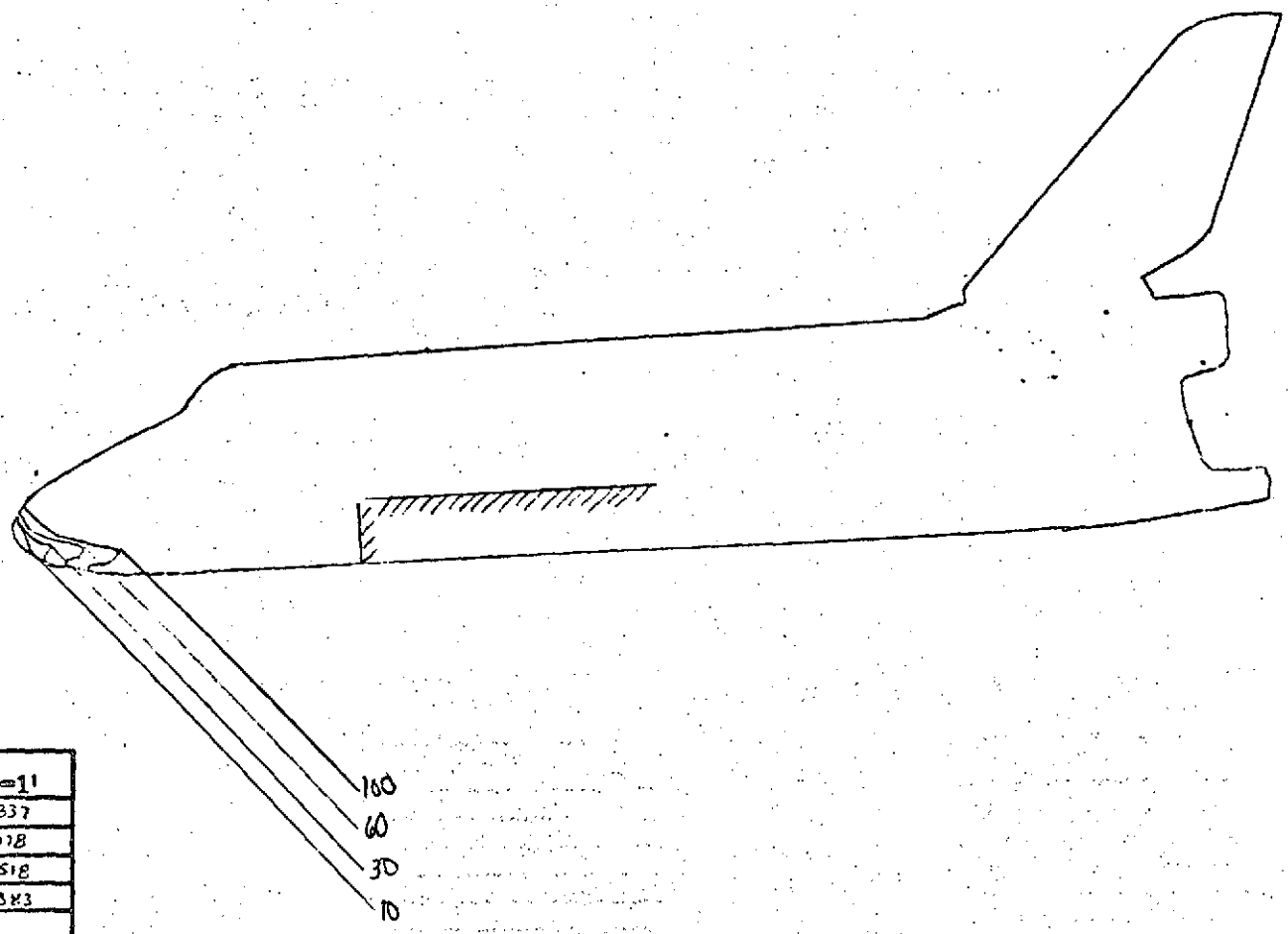

Isotherm	$h/h_{r=1}$
10	0.870837
30	0.562778
60	0.355518
100	0.275383

FIG. 161

CONFIG. 46-2

LENGTH (ft) = .638

SCALE .00593

FACILITY LRC/VDT

TEST OH42B (RPA)

RUN 4178

M_∞ = 8

P_{total} (psi) = 635

T_{total} (°F) = 925

T_{aw}/T_{total} = 0.90

R_N per foot = 3×10^6

$T_{phase\ change}$ (°F) = 500

α = 30

β = 0

ϕ = 0

Camera Coordinates (from model center, x-axis parallel w/ stream, + downstream)

x (in) =

y (in) =

z (in) =

HS = 0.0732681 $\frac{BTU}{FT^2}$-SEC-°F

HVD-EVCS

PHASE CHANGE TEST

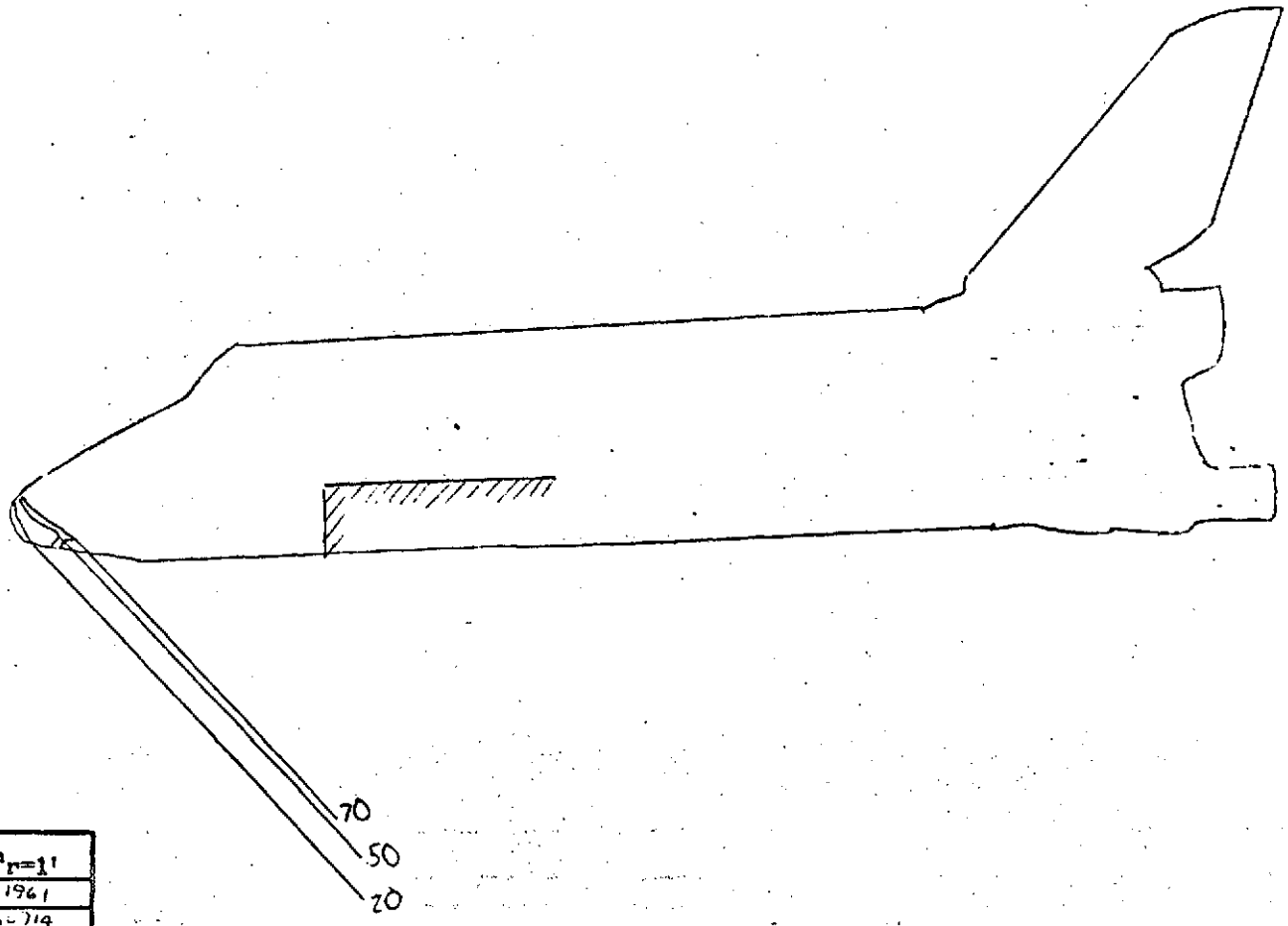

Isotherm	$h/h_{r=1'}$
20	0.601961
50	0.380714
70	0.321762

FIG. 162

CONFIG. 46-4AEBF

LENGTH (ft) = .638

SCALE .00593

FACILITY LRC/VDT

TEST OH42B (RPA)

RUN 4179

M_∞ = 8

P_{total} (psi) = 164

T_{total} (°F) = 820

T_{aw}/T_{total} = 0.90

R_N per foot = 1×10^6

$T_{phase\ change}$ (°F) = 350

α = 30

β = 0

ϕ = 0

Camera Coordinates (from model center, x-axis parallel w/ stream, + downstream)

x (in) =

y (in) =

z (in) =

HS = 0.0401778 $\frac{BTU}{FT^2}$ - sec-°F

HVD-EVC3

IASA Langley (Feb. 1971)

PHASE CHANGE TEST

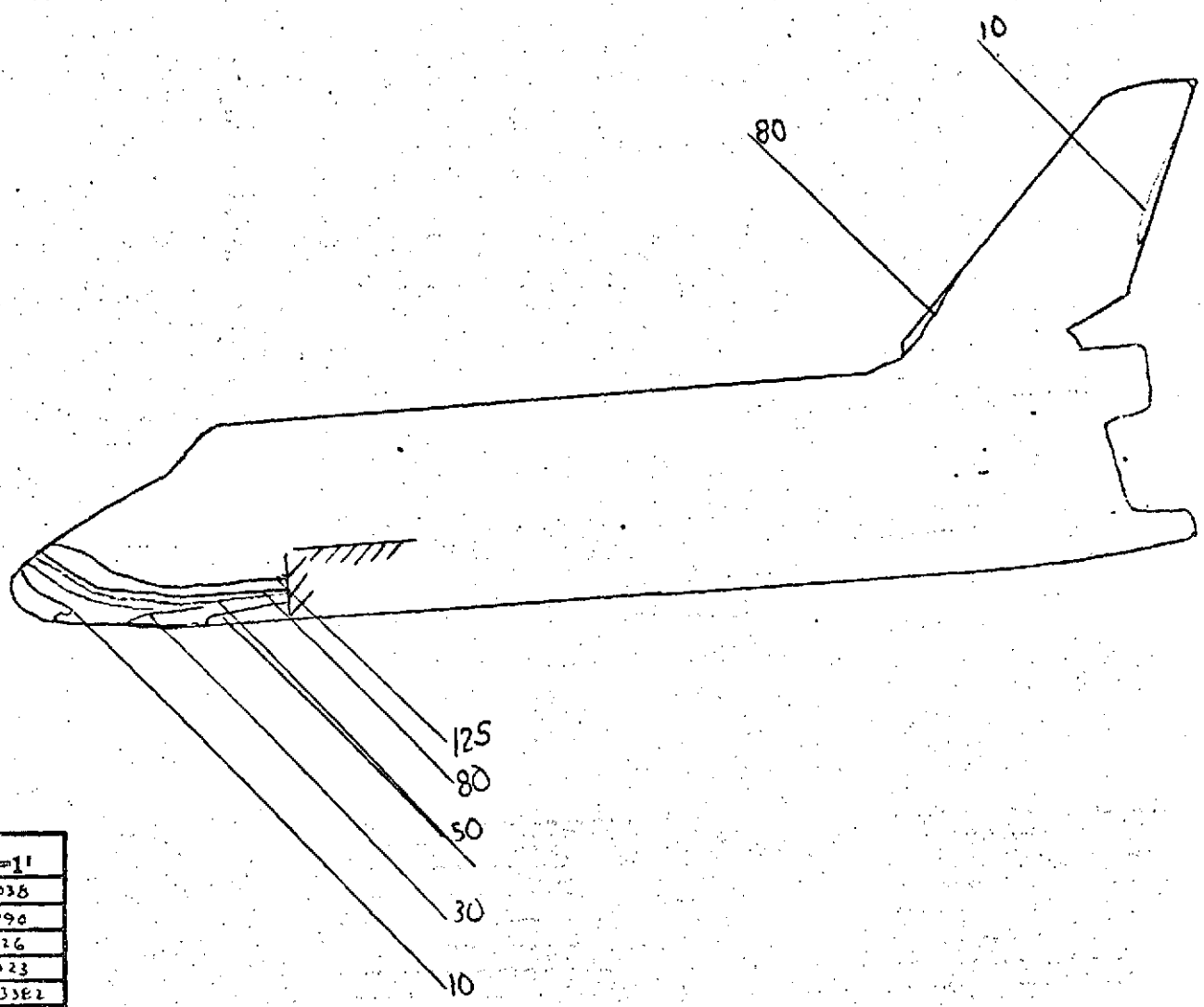

Isotherm	$h/h_{r=1}$
10	0.284038
30	0.163990
50	0.127026
80	0.106423
125	0.082382

FIG. 163

CONFIG. 46-2

LENGTH (ft) = .638

SCALE .00593

FACILITY LRC/UDT

TEST OH42B (RPA)

RUN 4/80

M_∞ = 8

P_{total} (psi) = 625

T_{total} (°F) = 910

T_{aw}/T_{total} = 0.90

R_N per foot = 3×10^6

$T_{phase\ change}$ (°F) = 300

α = 30

β = 0

ϕ = 0

Camera Coordinates (from model center, x-axis parallel w/ stream, + downstream)

x (in) =

y (in) =

z (in) =

$\mu S = 0.0726173 \frac{BTU}{FT^2} - sec - °F$

HVD-EVCS

NASA Langley (Feb. 1971)

PHASE CHANGE TEST

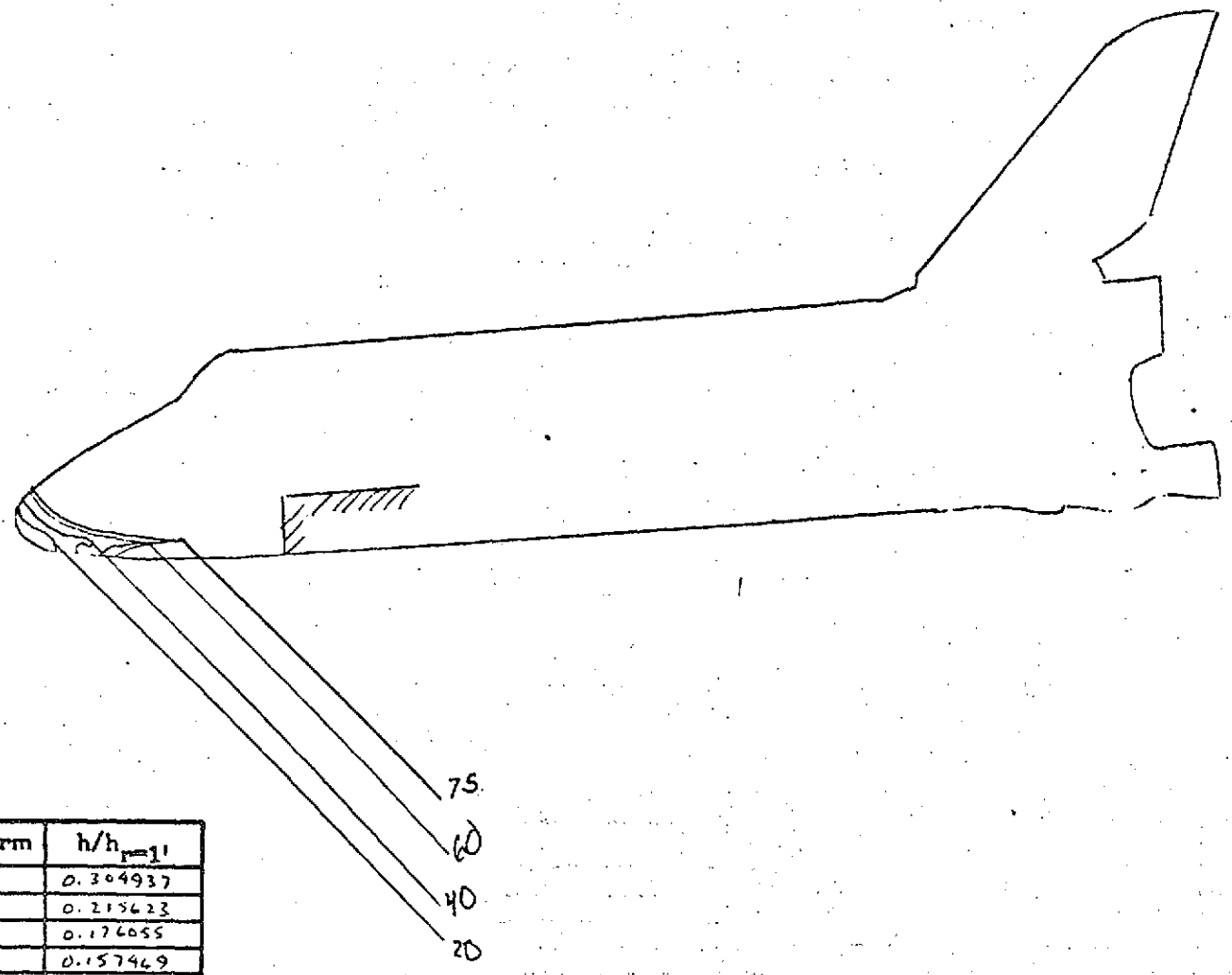

Isotherm	$h/h_{r=1'}$
20	0.304937
40	0.215623
60	0.176055
75	0.157469

FIG. 164

CONFIG. 46-4AEBF

LENGTH (ft) = .638

SCALE .00593

FACILITY LRC/VDT

TEST OH42B (RPA)

RUN 4181

M_∞ = 8

P_{total} (psi) = 157

T_{total} (°F) = 810

T_{aw}/T_{total} = 0.90

R_N per foot = 1×10^6

$T_{phase\ change}$ (°F) = 250

α = 30

β = 0

ϕ = 0

Camera Coordinates (from model center, x-axis parallel w/ stream, + downstream)

x (in) =

y (in) =

z (in) =

HS = 0.0393622 $\frac{BTU}{ft^2 - sec - °F}$

PHASE CHANGE TEST

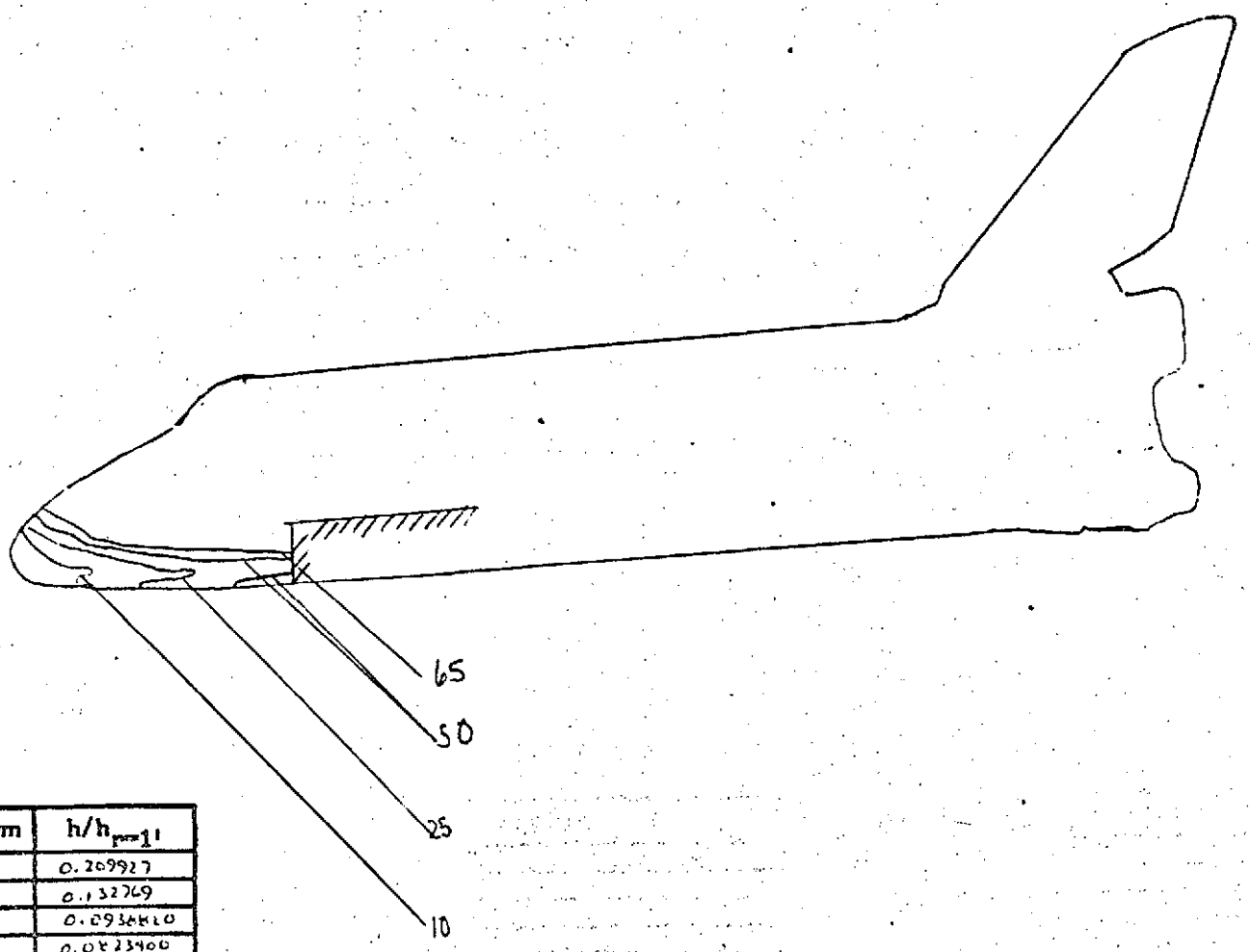

Isotherm	$h/h_{r=1}$
10	0.209927
25	0.132769
50	0.0936820
65	0.0823400

FIG. 165

CONFIG. 46-4AEBF

LENGTH (ft) = .638

SCALE .00593

FACILITY LRC/UDT

TEST OH42B (RPA)

RUN 4182

M_∞ = 8

P_{total} (psi) = 170

T_{total} (°F) = 780

T_{aw}/T_{total} = 0.90

R_N per foot = 1×10^6

$T_{phase\ change}$ (°F) = 175

α = 30

β = 0

ϕ = 0

Camera Coordinates (from model center, x-axis parallel w/ stream, + downstream)

x (in) =

y (in) =

z (in) =

[illegible] 8 on frame 5

$HS = 0.0404845 \frac{BTU}{FT^2}$-SEC-°F

[illegible]

HVD-EVCS

PHASE CHANGE TEST

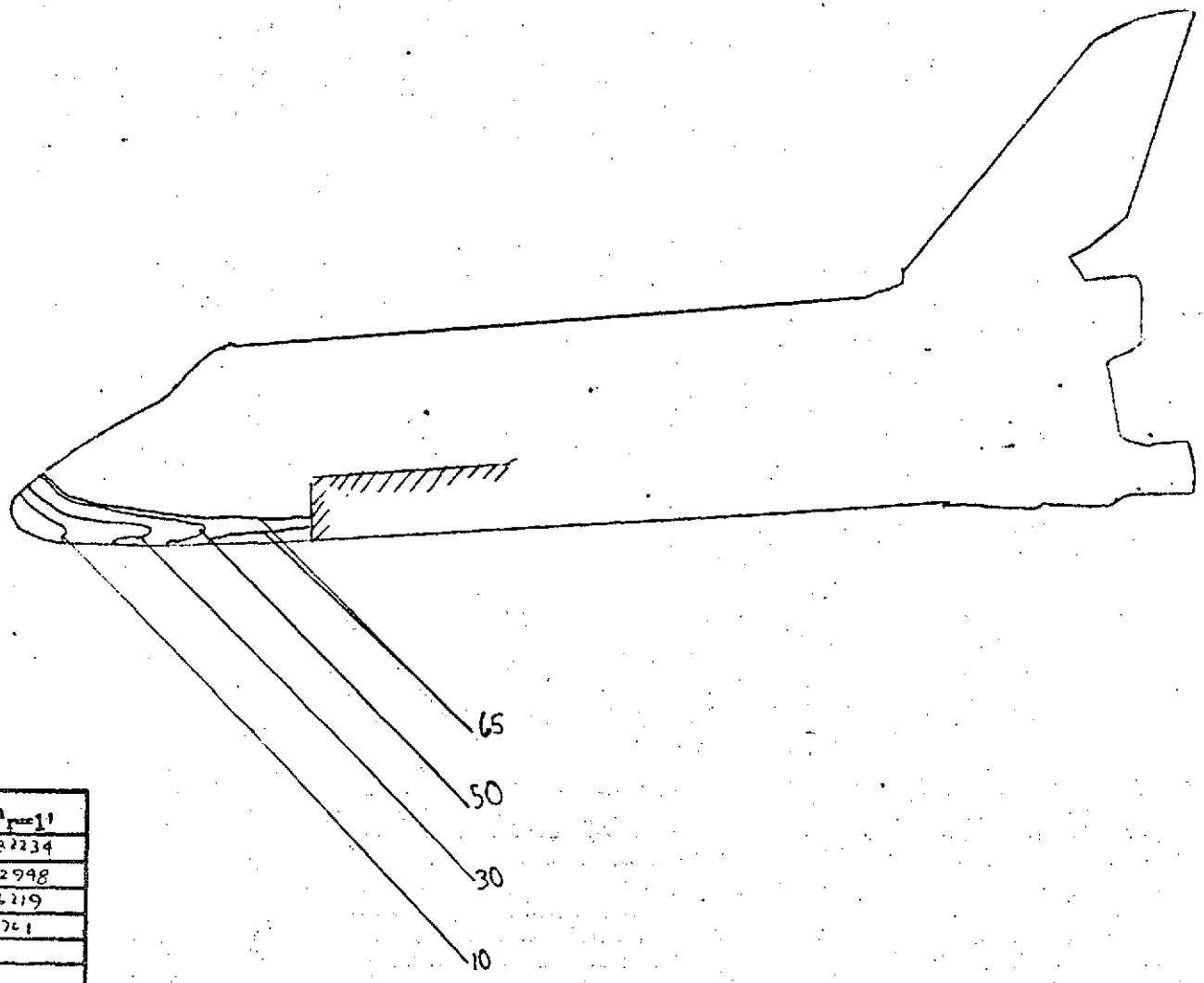

Isotherm	$h/h_{r=1}$
10	0.282234
30	0.162948
50	0.126219
65	0.110761

FIG. 166

CONFIG. 46-4AEBF

LENGTH (ft) = .638

SCALE .00593

FACILITY LRC/UDT

TEST OH42B (RPA)

RUN 4183

M_∞ = 8

P_{total} (psi) = 160

T_{total} (°F) = 790

T_{aw}/T_{total} = 0.90

R_N per foot = 1×10^6

$T_{phase\ change}$ (°F) = 200

α = 30

β = 0

ϕ = 0

Camera Coordinates (from model center, x-axis parallel w/ stream, + downstream)

x (in) =

y (in) =

z (in) =

Reactor ¢ on Front 5

MDS

HS = 0.0395499 $\frac{BTU}{FT^2}$ - SEC - °F

HVD-EVCS

NASA Langley (Feb. 1971)

PHASE CHANGE TEST

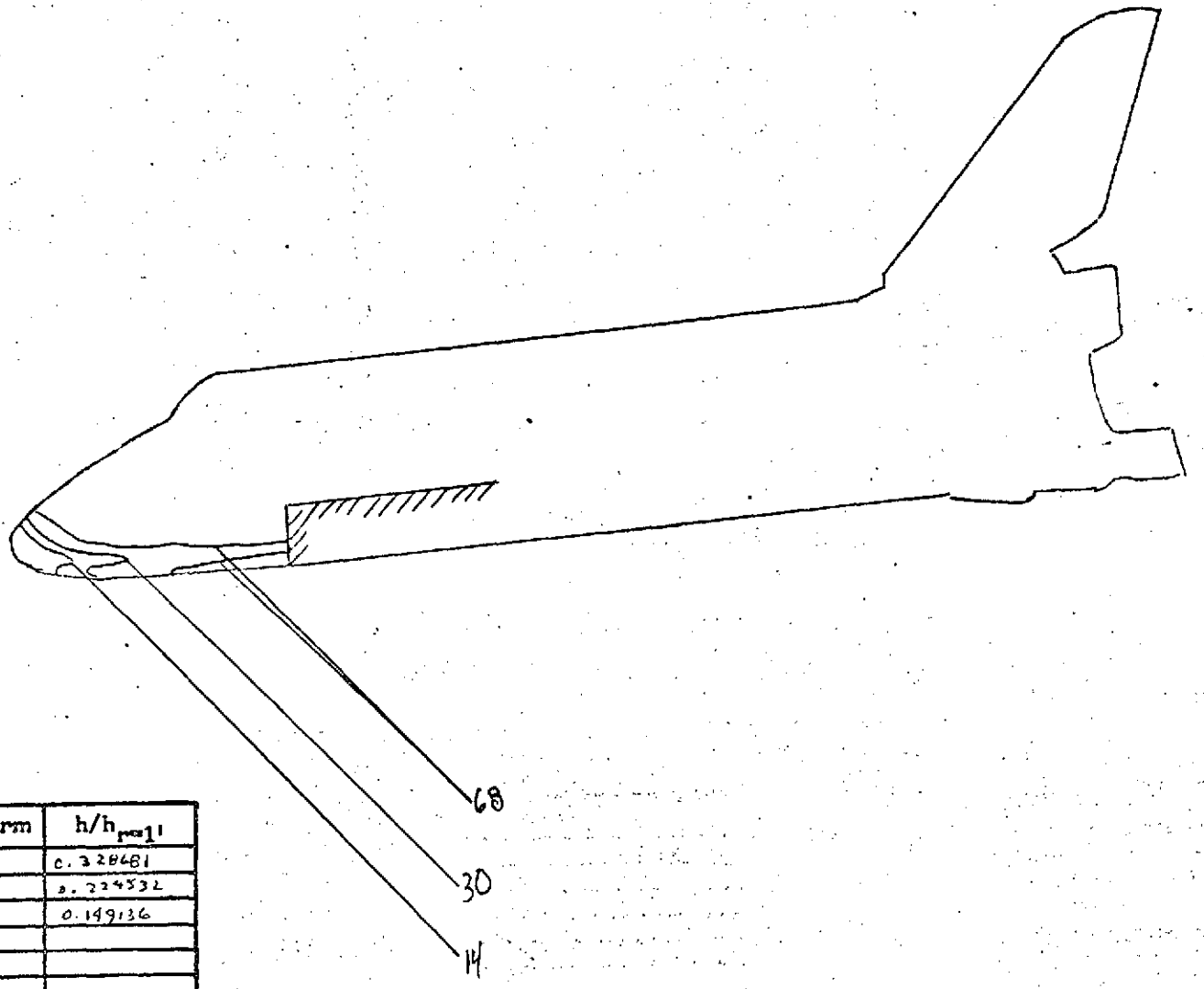

Isotherm	$h/h_{r=1}$
14	0.328481
30	0.224532
68	0.149136

FIG. 167

CONFIG. 46-4AEBF

LENGTH (ft) = .638

SCALE .00593

FACILITY LRC/UDT

TEST OH42B (RPA)

RUN 4184

M_∞ = 8

P_{total} (psi) = 635

T_{total} (°F) = 910

T_{aw}/T_{total} = 0.90

R_N per foot = 3×10^6

$T_{phase\ change}$ (°F) = 350

α = 30

β = 0

ϕ = 0

Camera Coordinates (from model center, x-axis parallel w/ stream, + downstream)

x (in) =

y (in) =

z (in) =

Hit 9 on Time 5

Hs = 0.0733534 $\frac{BTU}{FT^2}$-sec-°R

HYD-EVCS

PHASE CHANGE TEST

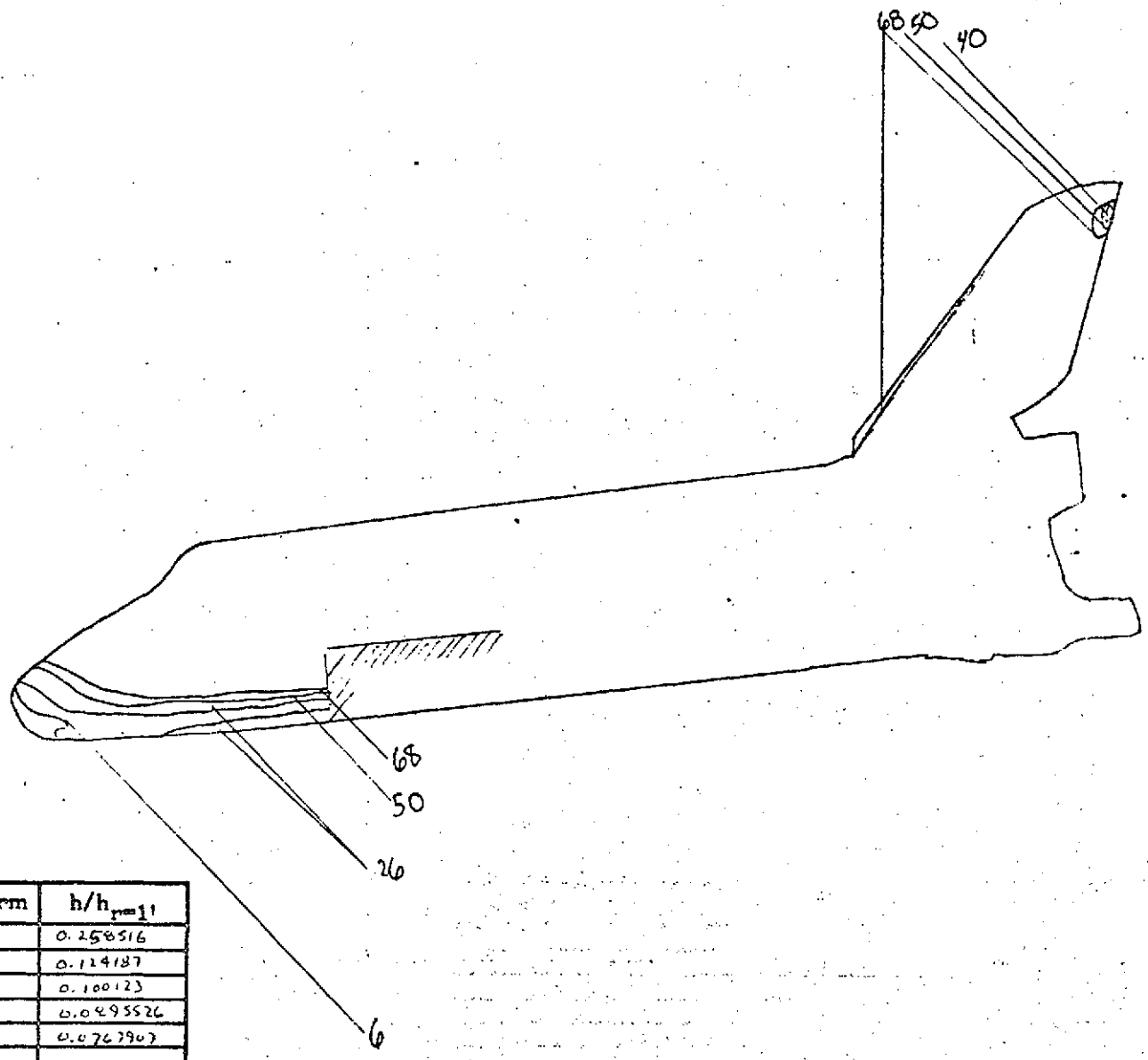

Isotherm	$h/h_{r=1}$
6	0.258516
26	0.124187
40	0.100123
50	0.0895526
68	0.0767907

FIG. 168

CONFIG. 46-4AEBF

LENGTH (ft) = .638

SCALE .00593

FACILITY LRC/VDT

TEST OH42B (RPA)

RUN 4185

M_∞ = 8

P_{total} (psi) = 640

T_{total} (°F) = 890

T_{aw}/T_{total} = 0.90

R_N per foot = 3×10^6

$T_{phase\ change}$ (°F) = 250

α = 30

β = 0

ϕ = 0

Camera Coordinates (from model center, x-axis parallel w/ stream, + downstream)

x (in) =

y (in) =

z (in) =

[illegible] FRAME 6

HDS

HS = 0.0737114 $\frac{BTU}{FT^2}$-SEC-°F

HVD-EVCS

PHASE CHANGE TEST

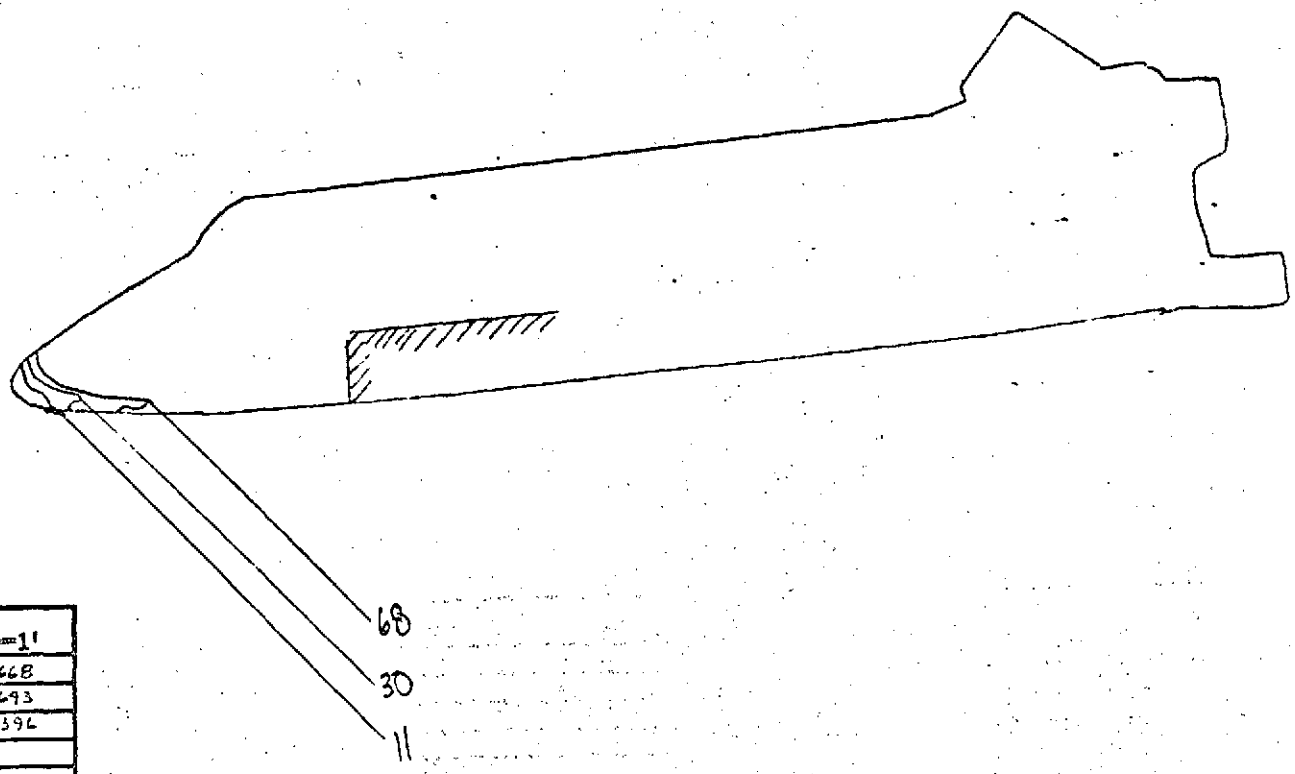

Isotherm	$h/h_{r=1'}$
11	0.694668
30	0.420693
68	0.279396

FIG. 169

CONFIG. 46-4BF

LENGTH (ft) = .638

SCALE .00593

FACILITY LRC/UDT

TEST OH42B (RPA)

RUN 4186

M_∞ = 8

P_{total} (psi) = 630

T_{total} (°F) = 890

T_{aw}/T_{total} = 0.90

R_N per foot = 3×10^6

$T_{phase\ change}$ (°F) = 450

α = 30

β = 0

ϕ = 0

Camera Coordinates (from model center, x-axis parallel w/ stream, + downstream)

x (in) =

y (in) =

z (in) =

HIS [illegible] FRAME 5

$HS = 0.0728728 \frac{BTU}{FT^2}$-SEC-°F

HVD-EVCS

PHASE CHANGE TEST

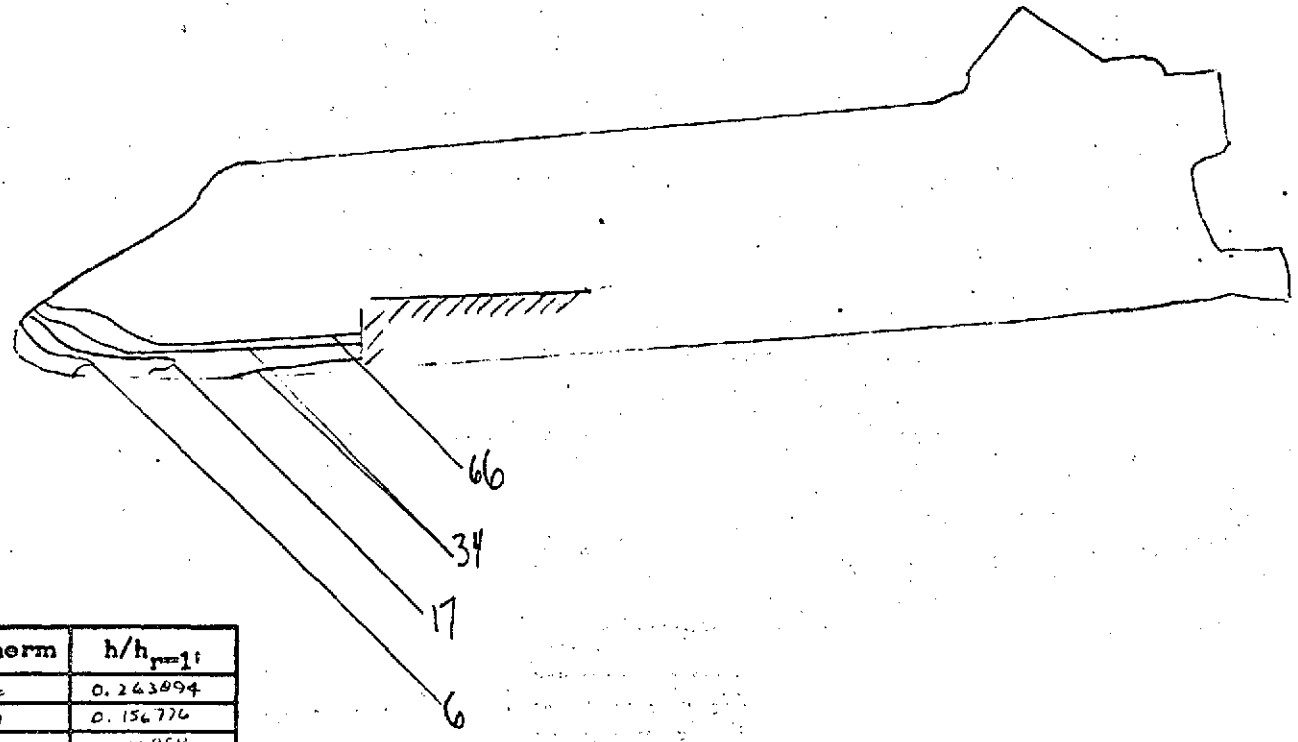

Isotherm	$h/h_{r=1}$
6	0.263894
17	0.156776
34	0.110858
66	0.0795669

FIG. 170

CONFIG. 46-4BF

LENGTH (ft) = .638

SCALE .00593

FACILITY LRC/VDT

TEST OH42B (RPA)

RUN 4188

M_∞ = 8

P_{total} (psi) = 675

T_{total} (°F) = 890

T_{aw}/T_{total} = 0.90

R_N per foot = 3×10^6

$T_{phase\ change}$ (°F) = 250

α = 30

β = 0

ϕ = 0

Camera Coordinates (from model center, x-axis parallel w/ stream, + downstream)

x (in) =

y (in) =

z (in) =

[illegible] FRAME 5

HS = 0.0726143 $\frac{BTU}{FT^2}$ - SEC - °F

ASA Langley (Feb. 1971)

HVD-EVCS

PHASE CHANGE TEST

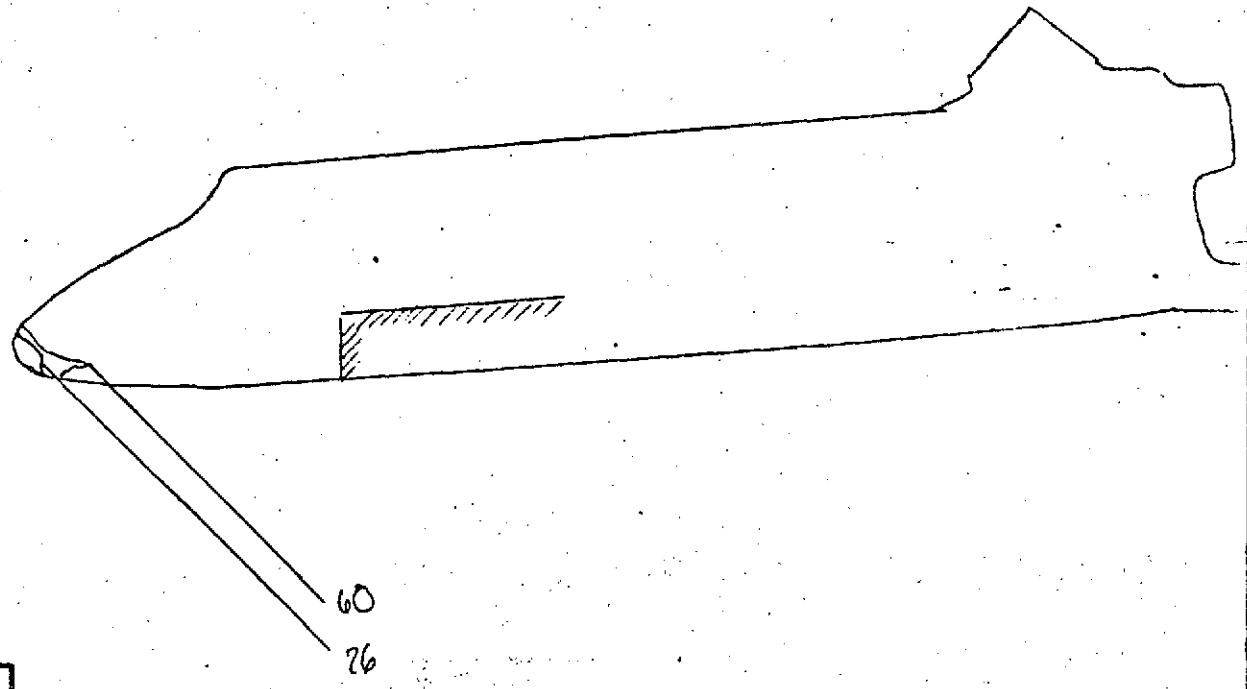

Isotherm	$h/h_{r=1}$
26	0.846333
60	0.558991

FIG. 171

CONFIG. 46-4BF

LENGTH (ft) = .638

SCALE .00593

FACILITY LRC/UDT

TEST OH42B (RPA)

RUN 4/89

M_∞ = 8

P_{total} (psi) = 625

T_{total} (°F) = 885

T_{aw}/T_{total} = 0.90

R_N per foot = 3×10^6

$T_{phase\ change}$ (°F) = 550

α = 30

β = 0

ϕ = 0

Camera Coordinates (from model center, x-axis parallel w/ stream, + downstream)

x (in) =

y (in) =

z (in) =

HS = 0.0224639 $\frac{BTU}{FT^2}$-SEC-°F

HVD-EVCS

PHASE CHANGE TEST

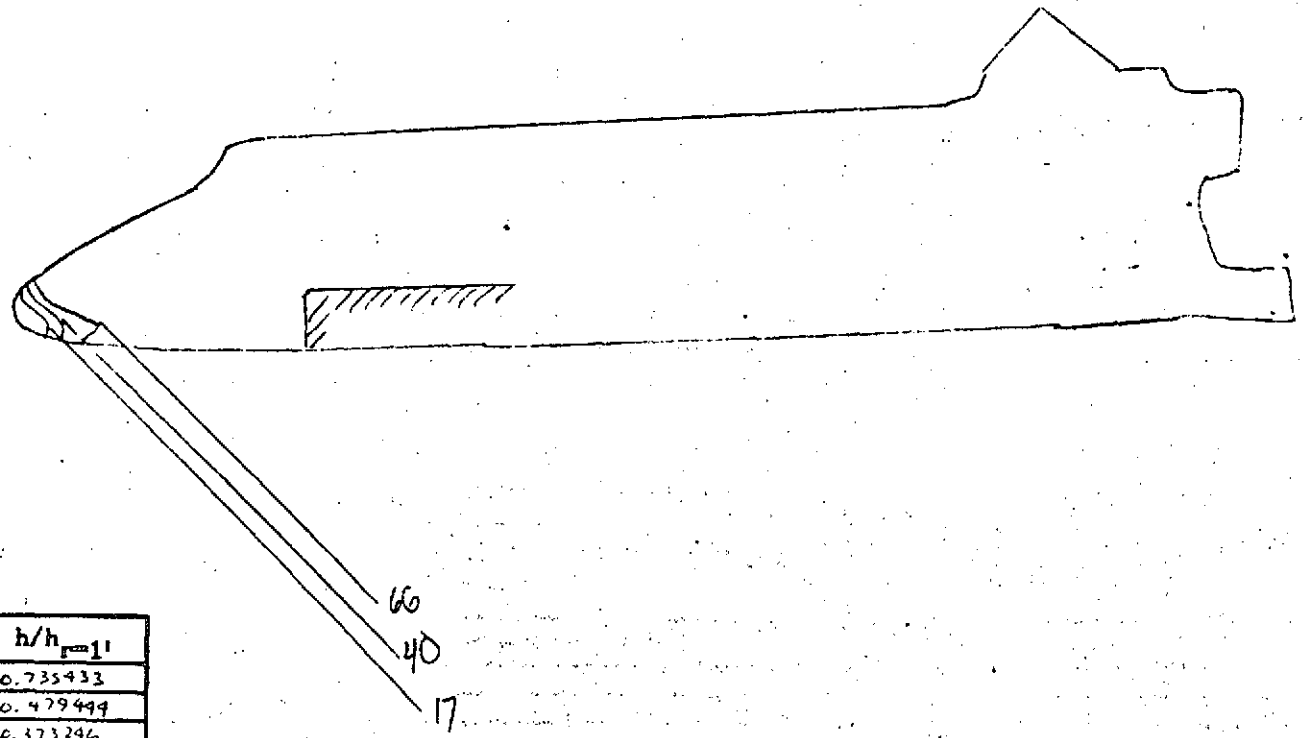

Isotherm	$h/h_{r=1'}$
17	0.735433
40	0.479444
66	0.373246

FIG. 172

CONFIG. 46-4BF

LENGTH (ft) = .638

SCALE .00593

FACILITY LRC/UDT

TEST OH42B (RPA)

RUN 4190

M_∞ = 8

P_{total} (psi) = 630

T_{total} (°F) = 895

T_{aw}/T_{total} = 0.90

R_N per foot = 3×10^6

$T_{phase\ change}$ (°F) = 500

α = 30

β = 0

ϕ = 0

Camera Coordinates (from model center, x-axis parallel w/ stream, + downstream)

x (in) =

y (in) =

z (in) =

HS = 0.0728389 $\frac{BTU}{FT^2}$-SEC-°F

HVD-EVCS

NASA Langley (Feb. 1971)

PHASE CHANGE TEST

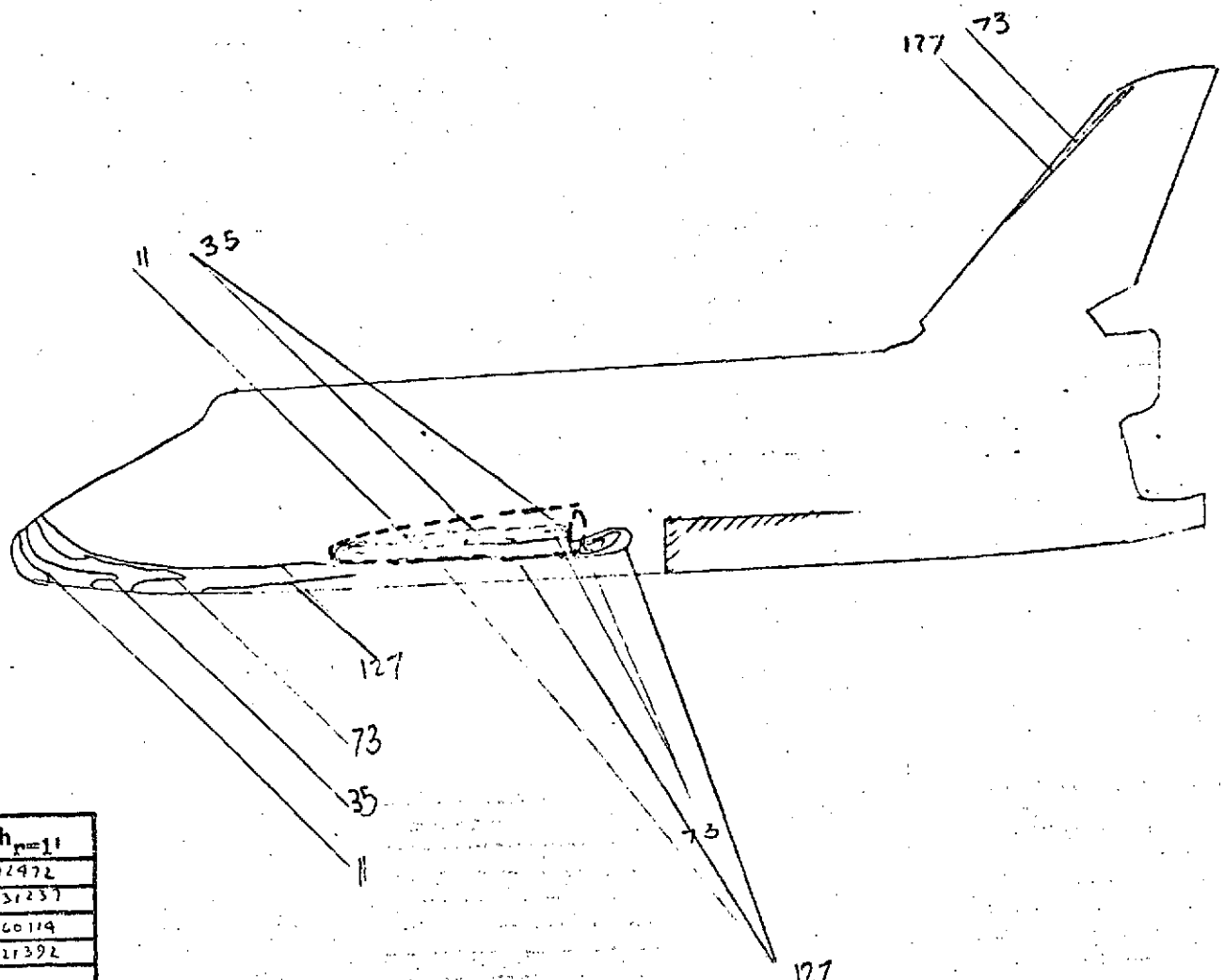

Isotherm	$h/h_{r=11}$
11	0.412472
35	0.231257
73	0.160119
127	0.121392

FIG. 173

CONFIG. 46-5

LENGTH (ft) = .638

SCALE .00595

FACILITY LRC/UDT

TEST OH42B (RPA)

RUN 4191

M_∞ = 8

P_{total} (psi) = 164

T_{total} (°F) = 805

T_{aw}/T_{total} = 0.90

R_N per foot = 1×10^6

$T_{phase\ change}$ (°F) = 250

α = 30

β = 0

ϕ = 0

Camera Coordinates (from model center, x-axis parallel w/ stream, + downstream)

x (in) =

y (in) =

z (in) =

HS = 0.0400708 $\frac{BTU}{FT.}$ -SEC- °F

HYD-EVCS

(Feb. 1971)

PHASE CHANGE TEST

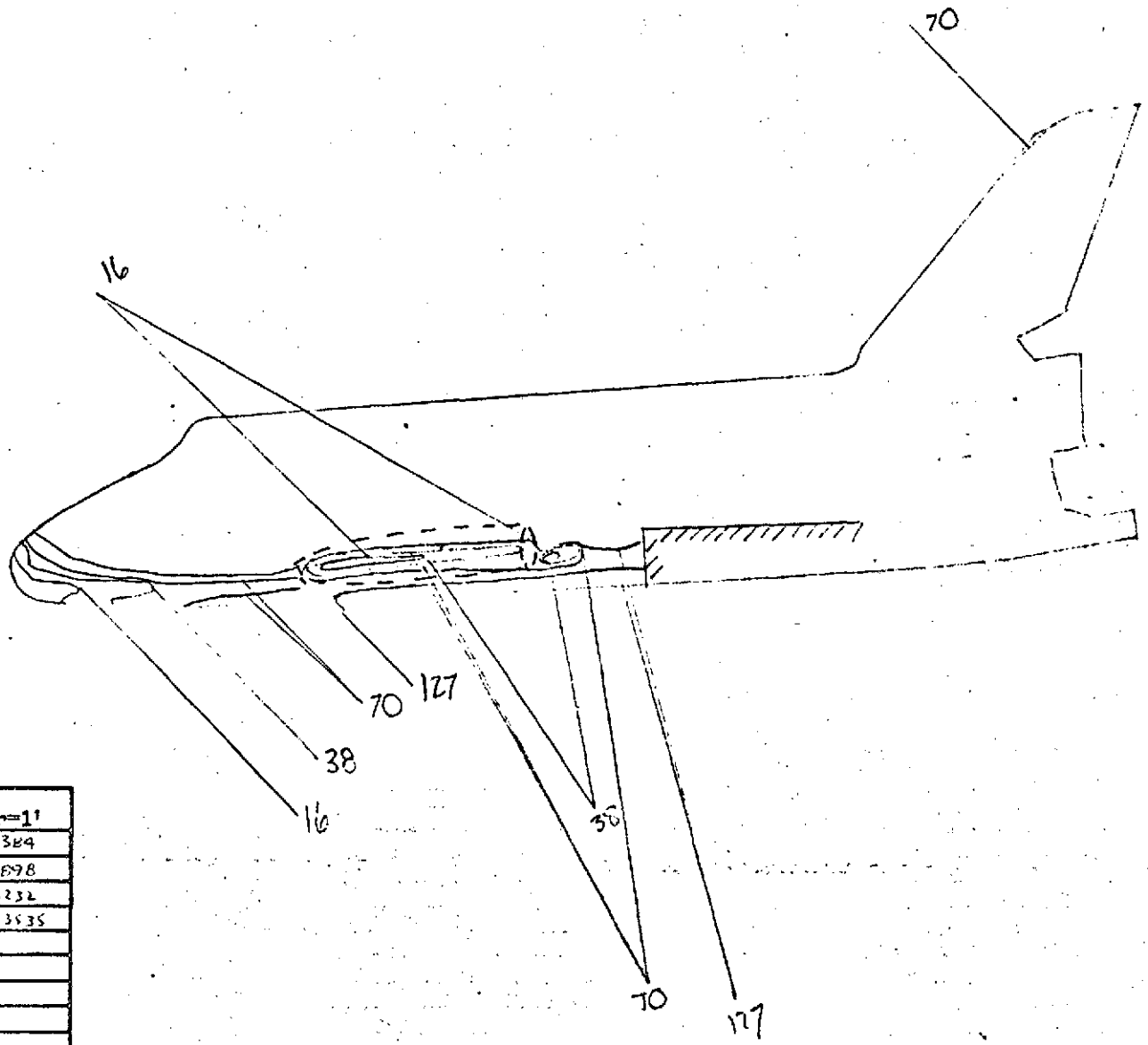

Isotherm	$h/h_{r=1'}$
16	0.226384
38	0.196898
70	0.108232
127	0.049535

FIG. 174

CONFIG. 46-5

LENGTH (ft) = .638

SCALE .00593

FACILITY LRC/UDT

TEST OH42B (RPA)

RUN 4192

M_∞ = 8

P_{total} (psi) = 157

T_{total} (°F) = 795

T_{aw}/T_{total} = 0.90

R_N per foot = 1×10^6

$T_{phase\ change}$ (°F) = 200

α = 30

β = 0

ϕ = 0

Camera Coordinates (from model center, x-axis parallel w/ stream, + downstream)

x (in) =

y (in) =

z (in) =

HS = 0.0392547 $\frac{BTU}{ft^2 - sec - °F}$

PHASE CHANGE TEST

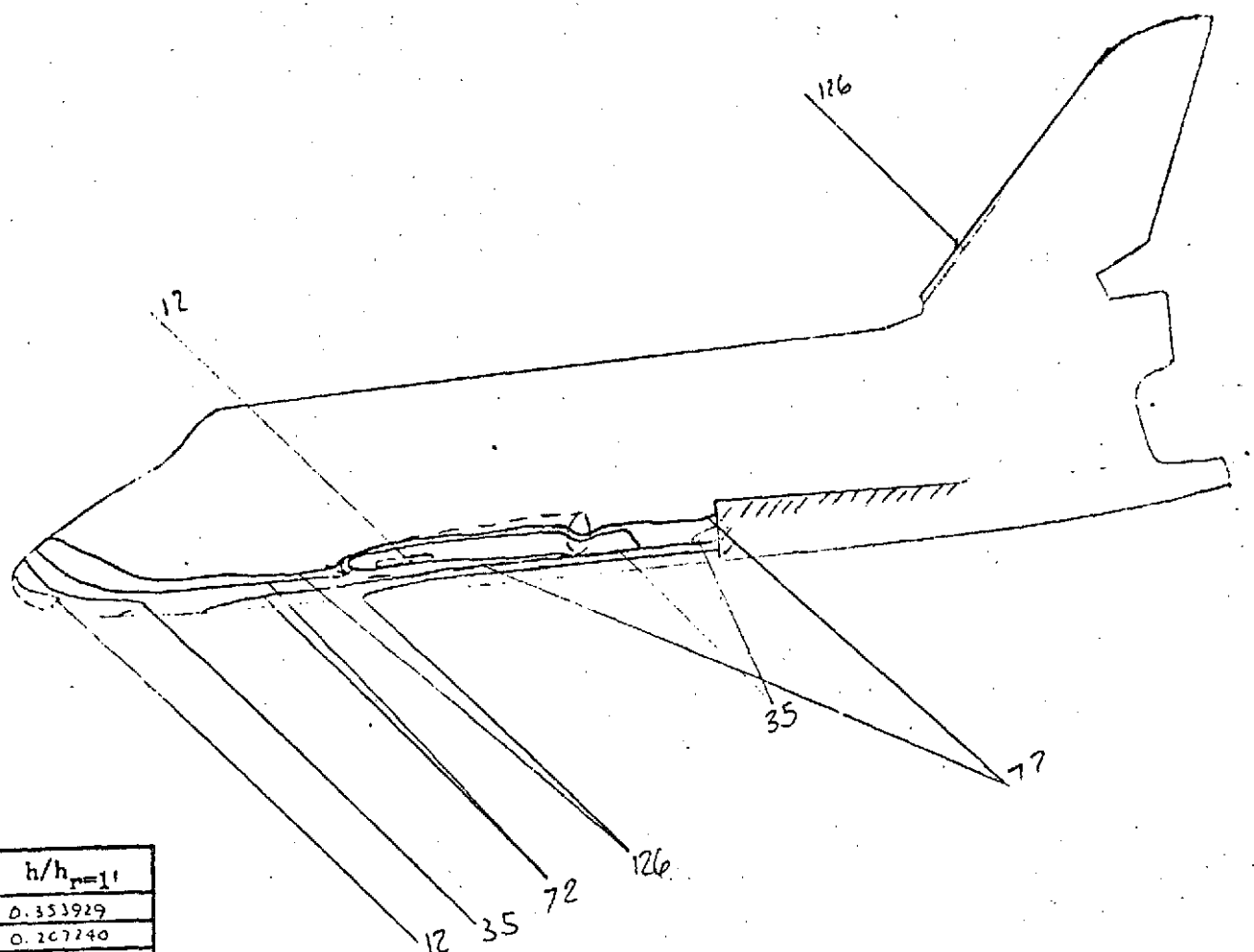

Isotherm	$h/h_{r=1}$
12	0.353929
35	0.207240
72	0.144991
126	0.149225

FIG. 175

CONFIG. 46-5

LENGTH (ft) = .638

SCALE .00593

FACILITY LRC/UDT

TEST OH42B (RPA)

RUN 4193

M_∞ = 8

P_{total} (psi) = 625

T_{total} (°F) = 910

T_{aw}/T_{total} = 0.90

R_N per foot = 3×10^6

$T_{phase\ change}$ (°F) = 350

α = 30

β = 0

ϕ = 0

Camera Coordinates (from model center, x-axis parallel w/ stream, + downstream)

x (in) =

y (in) =

z (in) =

$NS = 0.0728271 \frac{BTU}{FT^2 \cdot SEC \cdot °F}$

HVD-EVCS

PHASE CHANGE TEST

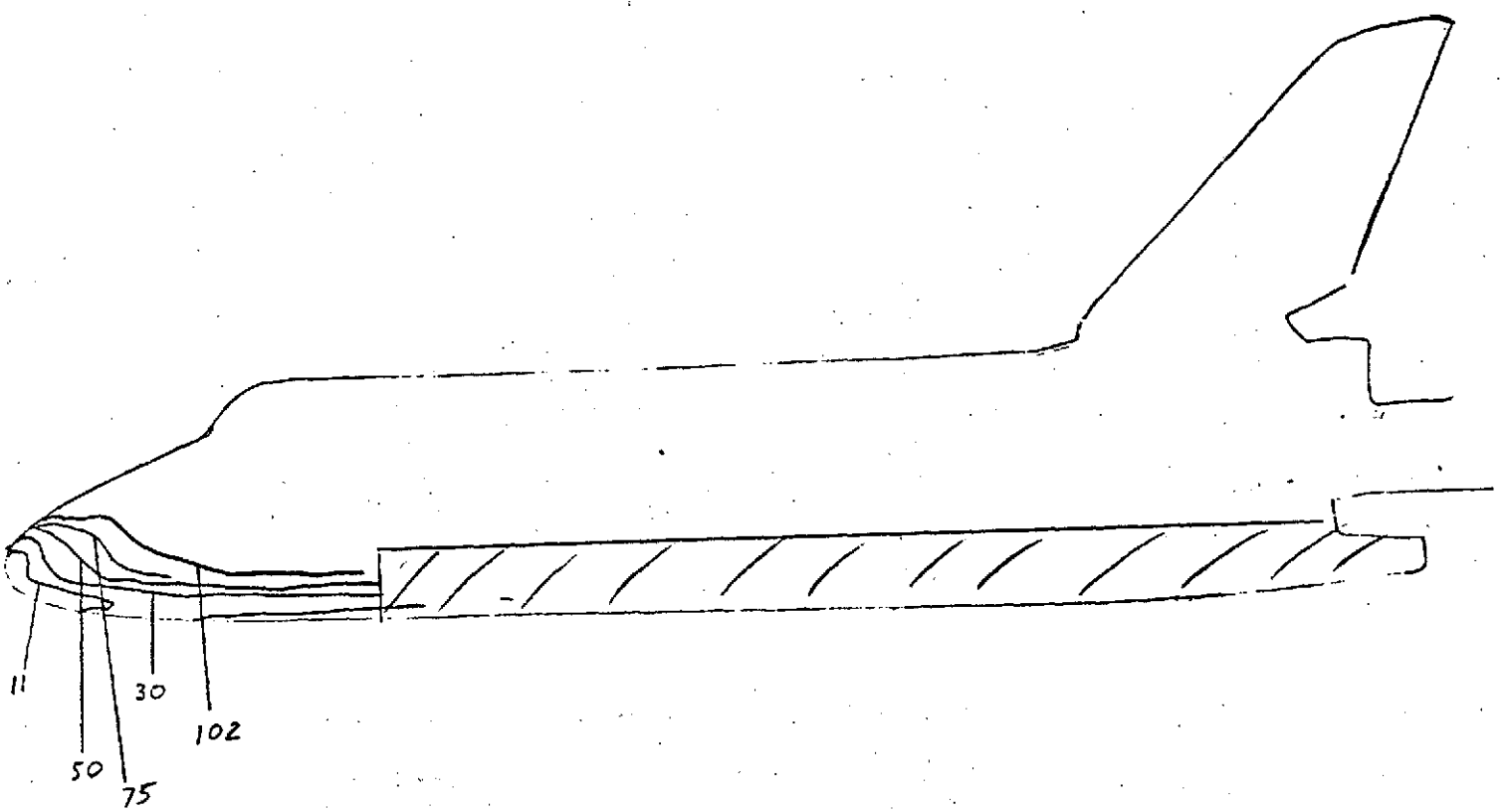

Isotherm	$h/h_{r=1'}$
11	0.221188
30	0.133936
50	0.103747
75	0.0897087
102	0.0724371

FIG. 176

CONFIG. 46-5

LENGTH (ft) = .638

SCALE .00593

FACILITY LRC/UDT

TEST OH42C (RPA)

RUN 4273

M_∞ = 8

P_{total} (psi) = 635

T_{total} (°F) = 895

T_{aw}/T_{total} = 0.90

R_N per foot = 3×10^6

$T_{phase\ change}$ (°F) = 275

α = 30

β = 0

ϕ = 0

Camera Coordinates (from model center, x-axis parallel w/ stream, + downstream)

x (in) =

y (in) =

z (in) =

FRAME 5 = g

WHD

$WS = 0.0727946 \frac{BTU}{FT^2 - SEC - °F}$

HVD-EVCS

PHASE CHANGE TEST

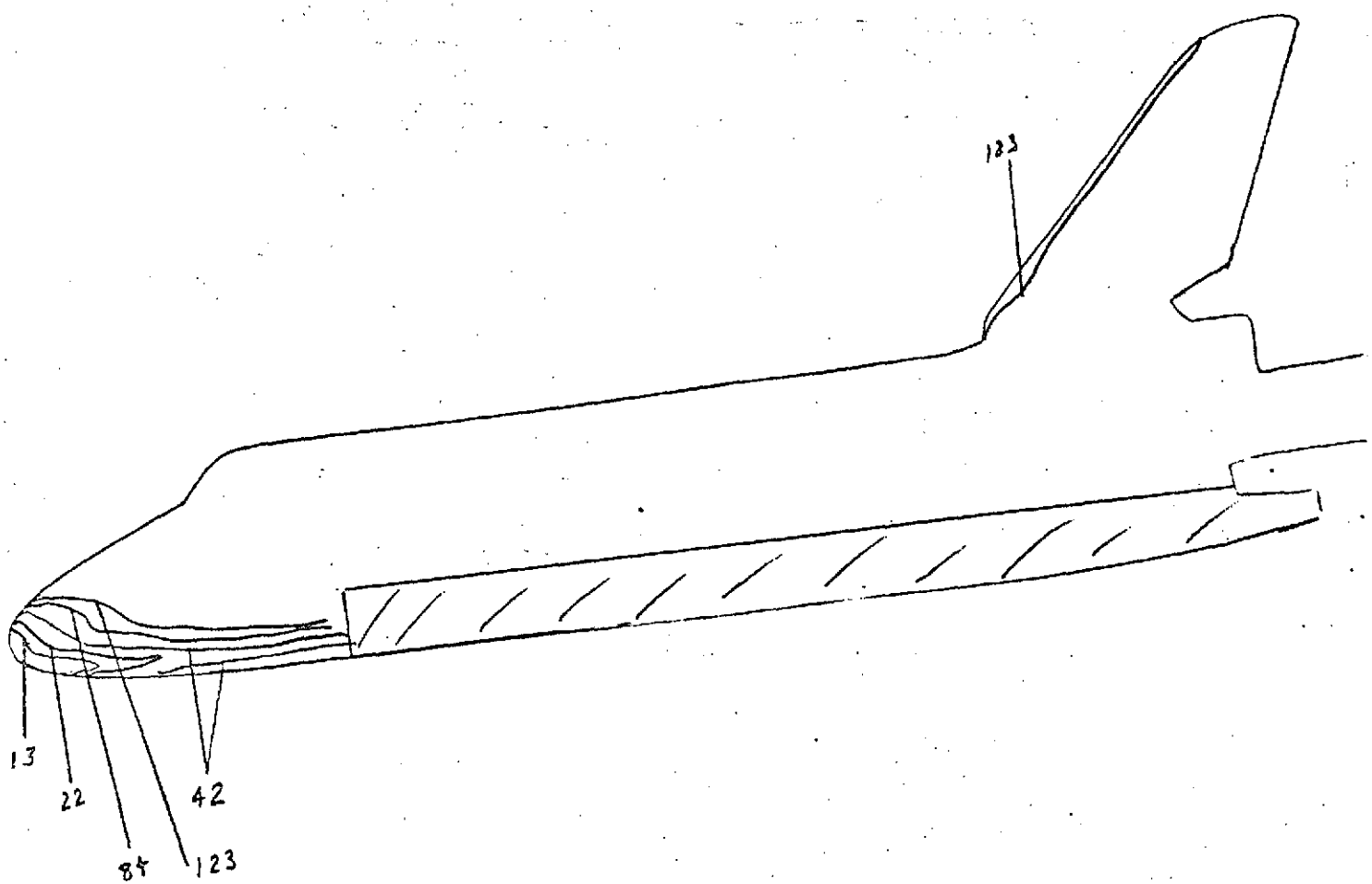

Isotherm	$h/h_{r=1'}$
13	0.239247
22	0.193911
42	0.133105
84	0.099194
123	0.077793

FIG. 177

CONFIG. 46-6

LENGTH (ft) = .638

SCALE .00593

FACILITY LRC/UDT

TEST OH42C (RPA)

RUN 4274

M_∞ = 8

P_{total} (psi) = 655

T_{total} (°F) = 900

T_{aw}/T_{total} = 0.90

R_N per foot = 3×10^6

$T_{phase\ change}$ (°F) = 300

α = 30

β = 0

ϕ = 0

Camera Coordinates (from model center, x-axis parallel w/ stream, + downstream)

x (in) =

y (in) =

z (in) =

FRAME 5 = ℄

WHD

MS = 0.0736932 $\frac{BTU}{Ft^2}$-sec-°F

HYD-EVCS

PHASE CHANGE TEST

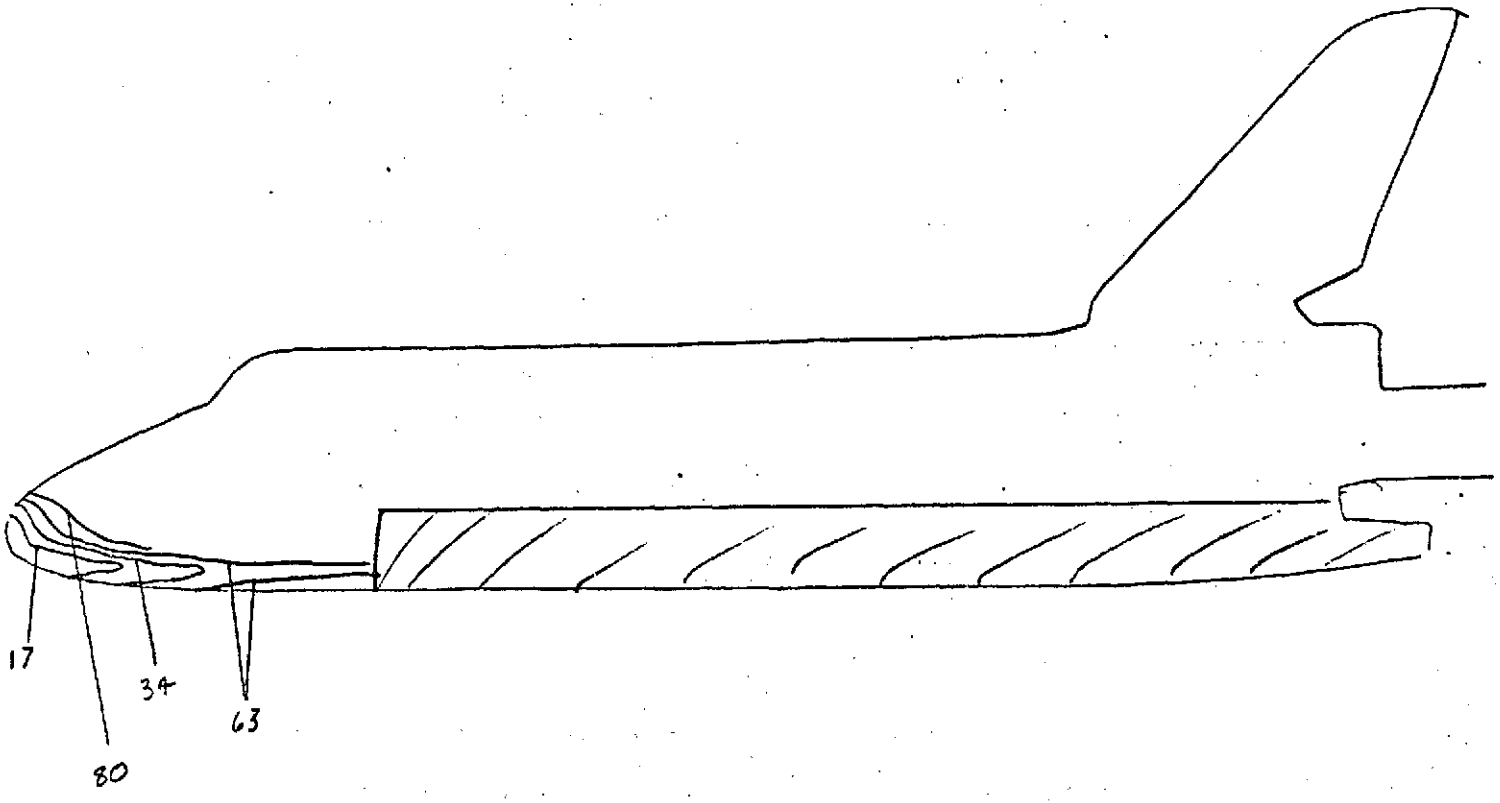

Isotherm	$h/h_{r=11}$
17	0.266594
34	0.186510
63	0.138498
80	0.122894

FIG. 178

CONFIG. 46-5

LENGTH (ft) = .638

SCALE .00593

FACILITY LRC/UDT

TEST OH42C (RPA)

RUN 4275

M_∞ = 8

P_{total} (psi) = 1395

T_{total} (°F) = 920

T_{aw}/T_{total} = 0.90

R_N per foot = 6×10^6

$T_{phase\ change}$ (°F) = 400

α = 30

β = 0

ϕ = 0

Camera Coordinates (from model center, x-axis parallel w/ stream, + downstream)

x (in) =

y (in) =

z (in) =

FRAME 5 = E

HS = 0.104677 $\frac{BTU}{FT^2 - SEC - °F}$

WHD

PHASE CHANGE TEST

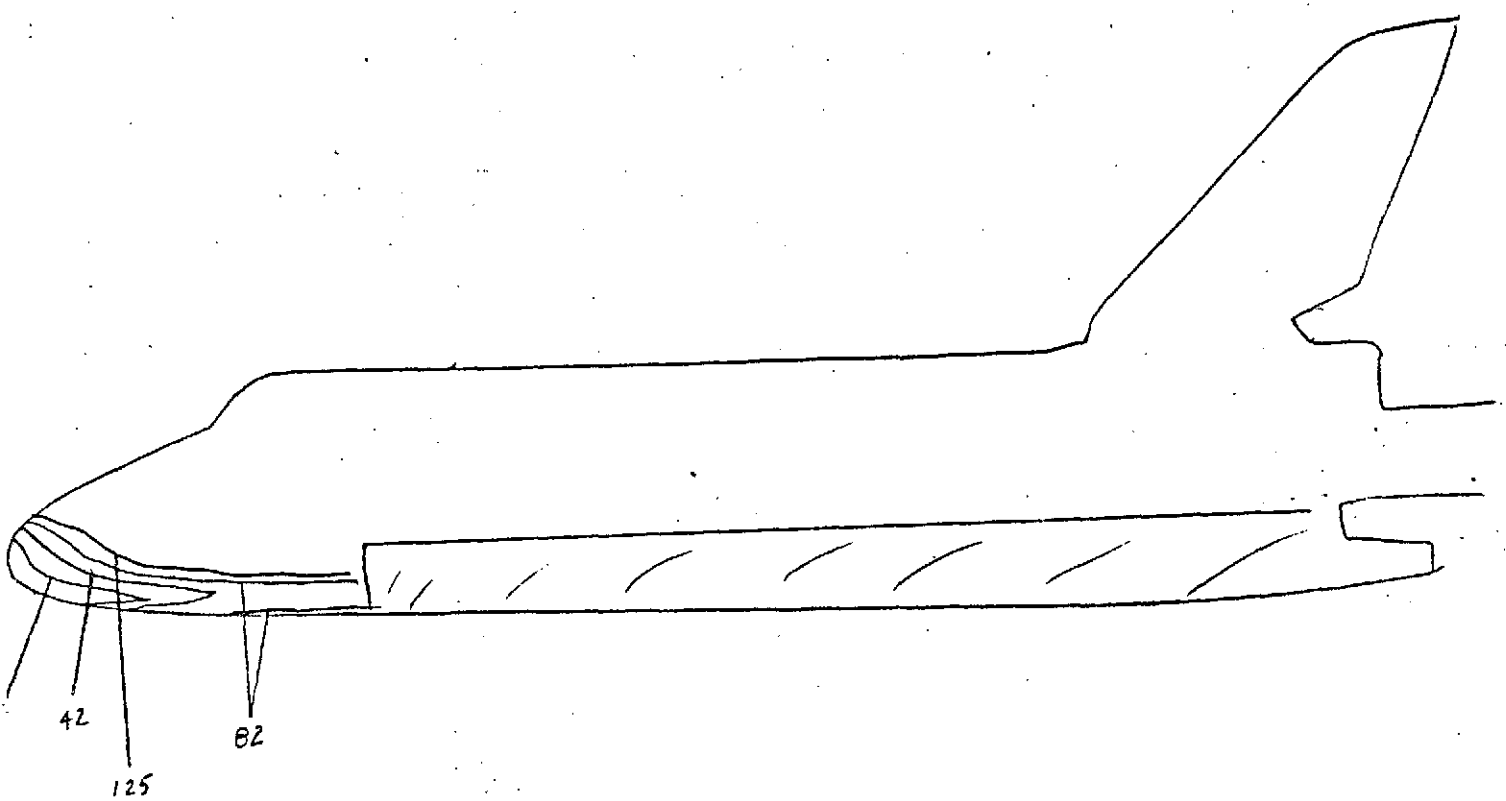

Isotherm	$h/h_{r=1'}$
21	0.242626
42	0.171104
82	0.122665
125	0.099529

FIG. 179

CONFIG. 46-6

LENGTH (ft) = .638

SCALE .00593

FACILITY LRC/UDT

TEST OH42C (RPA)

RUN 4276

M_∞ = 8

P_{total} (psi) = 620

T_{total} (°F) = 950

T_{aw}/T_{total} = 0.90

R_N per foot = 3×10^6

$T_{phase\ change}$ (°F) = 350

α = 30

β = 0

ϕ = 0

Camera Coordinates (from model center, x-axis parallel w/ stream, + downstream)

x (in) =

y (in) =

z (in) =

℄ = FRAMES

WHD

HS = 0.0723473 $\frac{Btu}{ft^2 \cdot sec \cdot °F}$

HYD-EVCS

PHASE CHANGE TEST

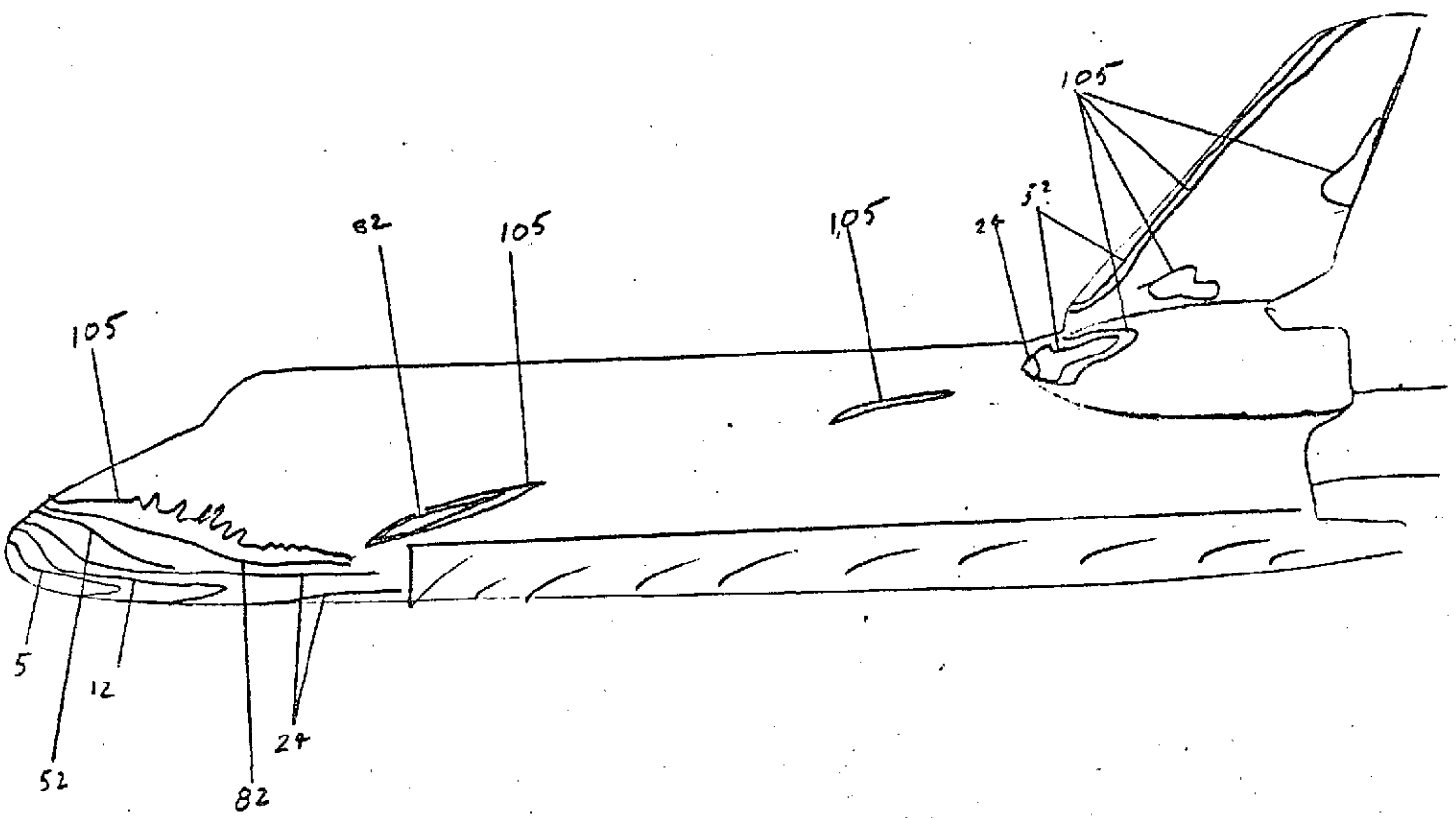

Isotherm	$h/h_{r=1}$
5	0.252368
12	0.161914
24	0.115199
52	0.078[illegible]
82	0.064[illegible]
105	0.055[illegible]

FIG. 180

CONFIG. 46-5

LENGTH (ft) = .638

SCALE .00593

FACILITY LRC/UDT

TEST OH42C (RPA)

RUN 279

M_∞ = 8

P_{total} (psi) = 1395

T_{total} (°F) = 940

T_{aw}/T_{total} = 0.90

R_N per foot = 6×10^6

$T_{phase\ change}$ (°F) = 300

α = 30

β = 0

ϕ = 0

Camera Coordinates (from model center, x-axis parallel w/ stream, + downstream)

x (in) =

y (in) =

z (in) =

ℓ = FRAME 5

UND

HS = 0.104627 $\frac{BTU}{FT^2 - SEC - °F}$

SVD-EVCS

PHASE CHANGE TEST

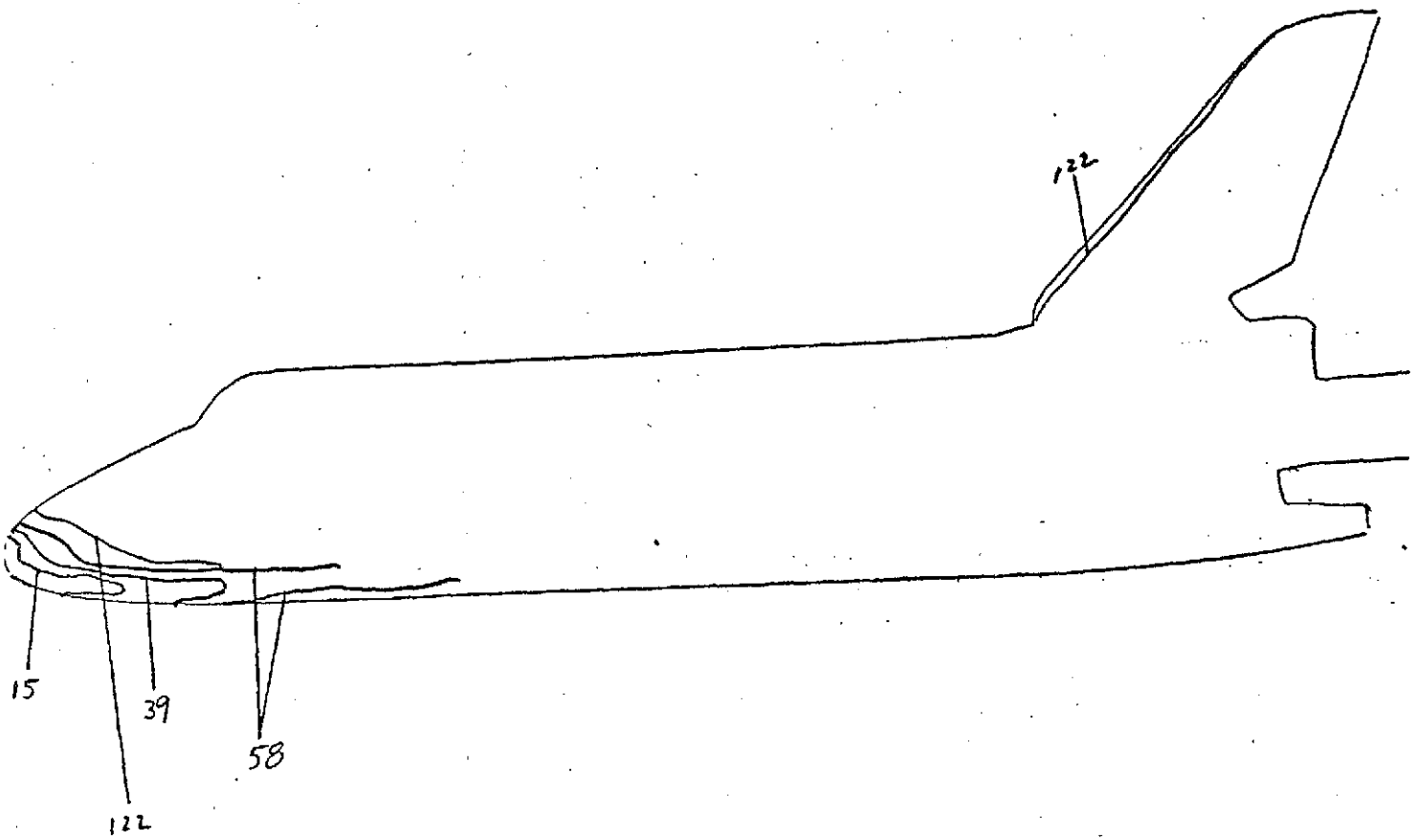

Isotherm	$h/h_{r=1}$
15	0.222550
39	0.138420
58	0.113177
122	0.0786358

FIG. 161

CONFIG. 46-6

LENGTH (ft) = .638

SCALE .00593

FACILITY LRC/UDT

TEST OH42C (RPA)

RUN 4280

M_∞ = 8

P_{total} (psi) = 160

T_{total} (°F) = 785

T_{aw}/T_{total} = 0.90

R_N per foot = 1×10^6

$T_{phase\ change}$ (°F) = 200

α = 30

β = 0

ϕ = 0

Camera Coordinates (from model center, x-axis parallel w/ stream, + downstream)

x (in) =

y (in) =

z (in) =

℄ = FRAME 5

WHD

HS = 0.0393018 $\frac{BTU}{FT^2}$ - sec - °F

HYD-EVCS

PHASE CHANGE TEST

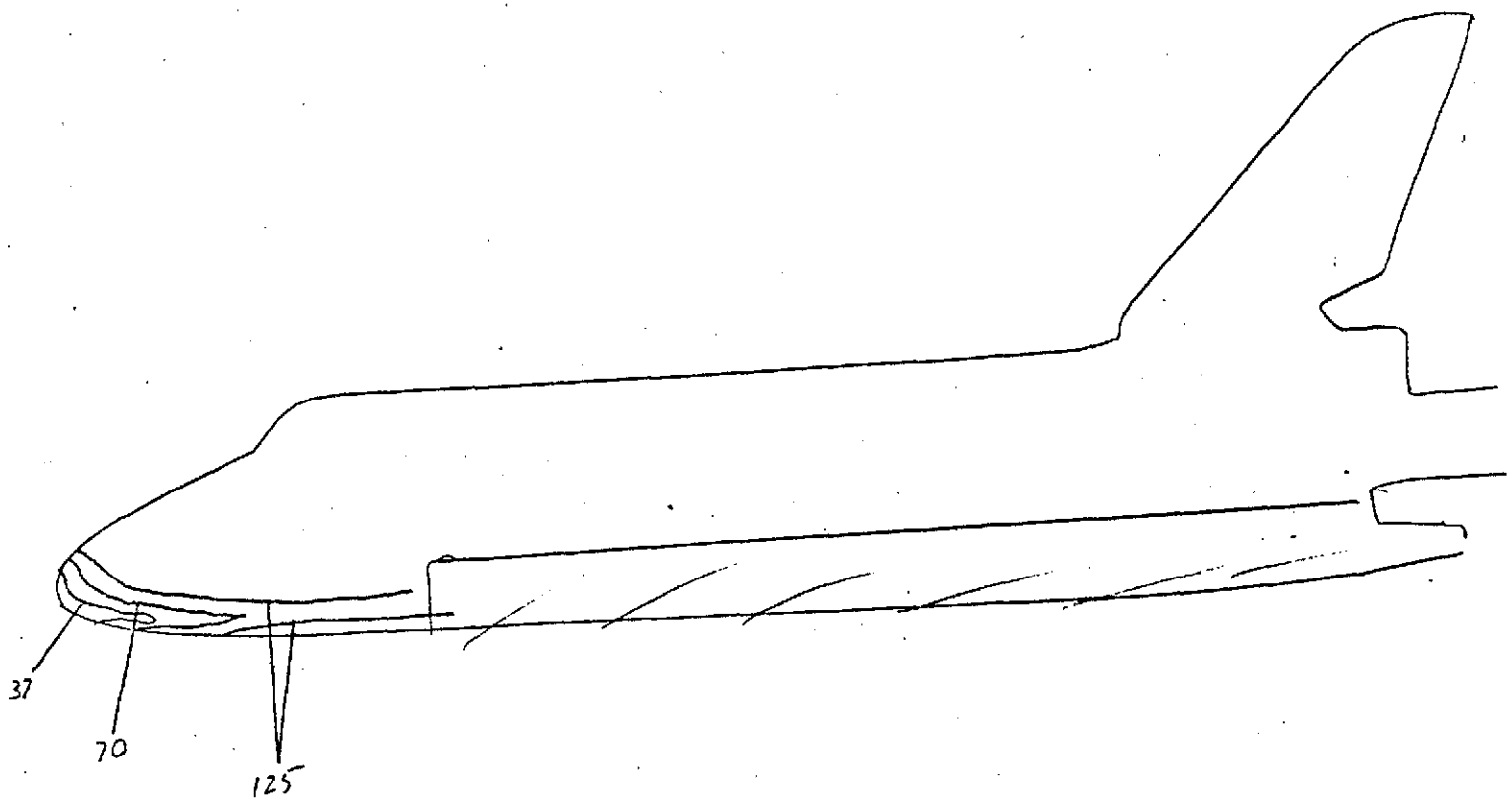

Isotherm	$h/h_{r=1}$
37	0.237935
70	0.169350
125	0.126730

FIG. 182

CONFIG. 46-6

LENGTH (ft) = .638

SCALE .00593

FACILITY LRC/UDT

TEST OH42C (RPA)

RUN 4283

M_∞ = 8

P_{total} (psi) = 160

T_{total} (°F) = 788

T_{aw}/T_{total} = 0.90

R_N per foot = 1×10^6

$T_{phase\ change}$ (°F) = 250

α = 30

β = 0

ϕ = 0

Camera Coordinates (from model center, x-axis parallel w/ stream, + downstream)

x (in) =

y (in) =

z (in) =

℄ = FRAME 5

W/HJ

HS = 0.0393703 $\frac{BTU}{FT^2}$ - sec - °F

HVD-EVCS

NASA Langley (Feb 1971)

PHASE CHANGE TEST

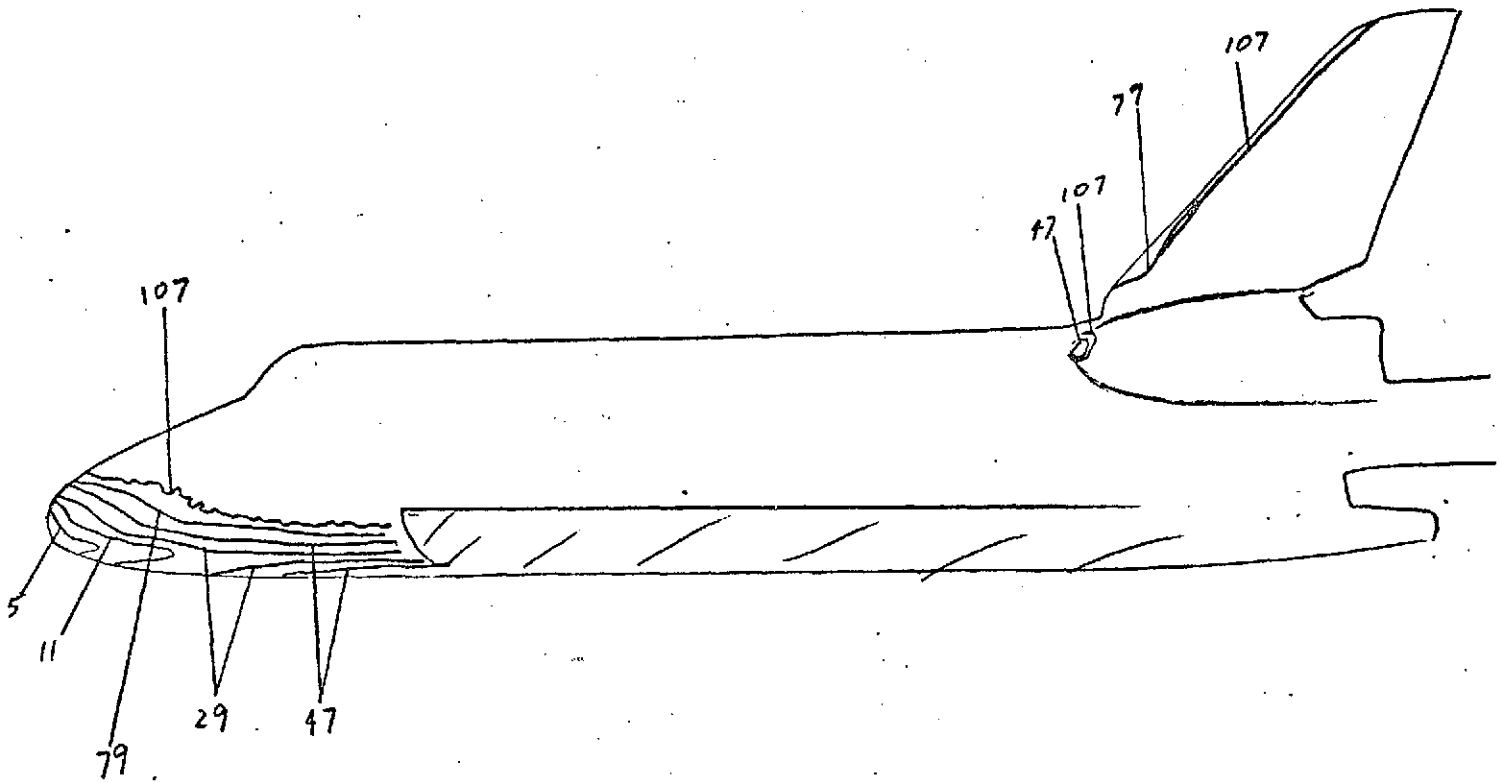

Isotherm	$h/h_{r=1}$
5	0.369607
11	0.249189
29	0.153471
47	0.120553
97	0.0929848
107	0.0798976

FIG. 183

CONFIG. 46-6

LENGTH (ft) = .638

SCALE .00593

FACILITY LRC/UDT

TEST OH42C (RPA)

RUN 4284

M_∞ = 8

P_{total} (psi) = 1400

T_{total} (°F) = 920

T_{aw}/T_{total} = 0.90

R_N per foot = 6×10^6

$T_{phase\ change}$ (°F) = 350

α = 30

β = 0

ϕ = 0

Camera Coordinates (from model center, x-axis parallel w/ stream, + downstream)

x (in) =

y (in) =

z (in) =

℄ = FRAME 5

WHD

HS = 0.104863 $\frac{BTU}{FT^2}$-SEC-°F

HVD-EVCS

PHASE CHANGE TEST

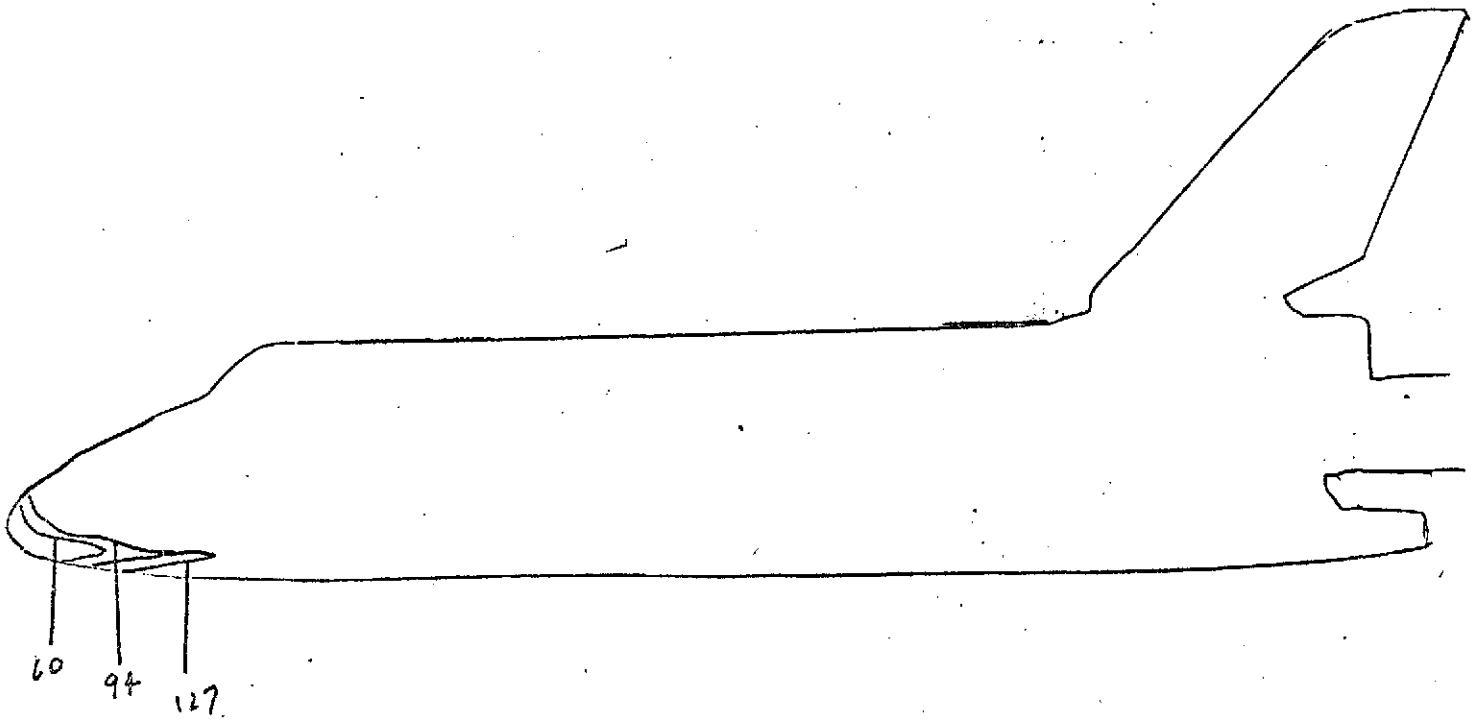

Isotherm	$h/h_{r=1}$
60	0.206726
94	0.165161
127	0.192092

FIG. 184

CONFIG. 46-5

LENGTH (ft) = .638

SCALE .00593

FACILITY LRC/UDT

TEST OH42C (RPA)

RUN 4286

M_∞ = 8

P_{total} (psi) = 155

T_{total} (°F) = 730

T_{aw}/T_{total} = 0.90

R_N per foot = 1×10^6

$T_{phase\ change}$ (°F) = 250

α = 35

β = 0

ϕ = 0

Camera Coordinates (from model center, x-axis parallel w/ stream, + downstream)

x (in) =

y (in) =

z (in) =

℄ @ FRAME 5

HS = 0.0386545 $\frac{BTU}{FT^2}$ - SEC - °F

WHD

HVD-EVCS

NASA Langley (Feb. 1971)

PHASE CHANGE TEST

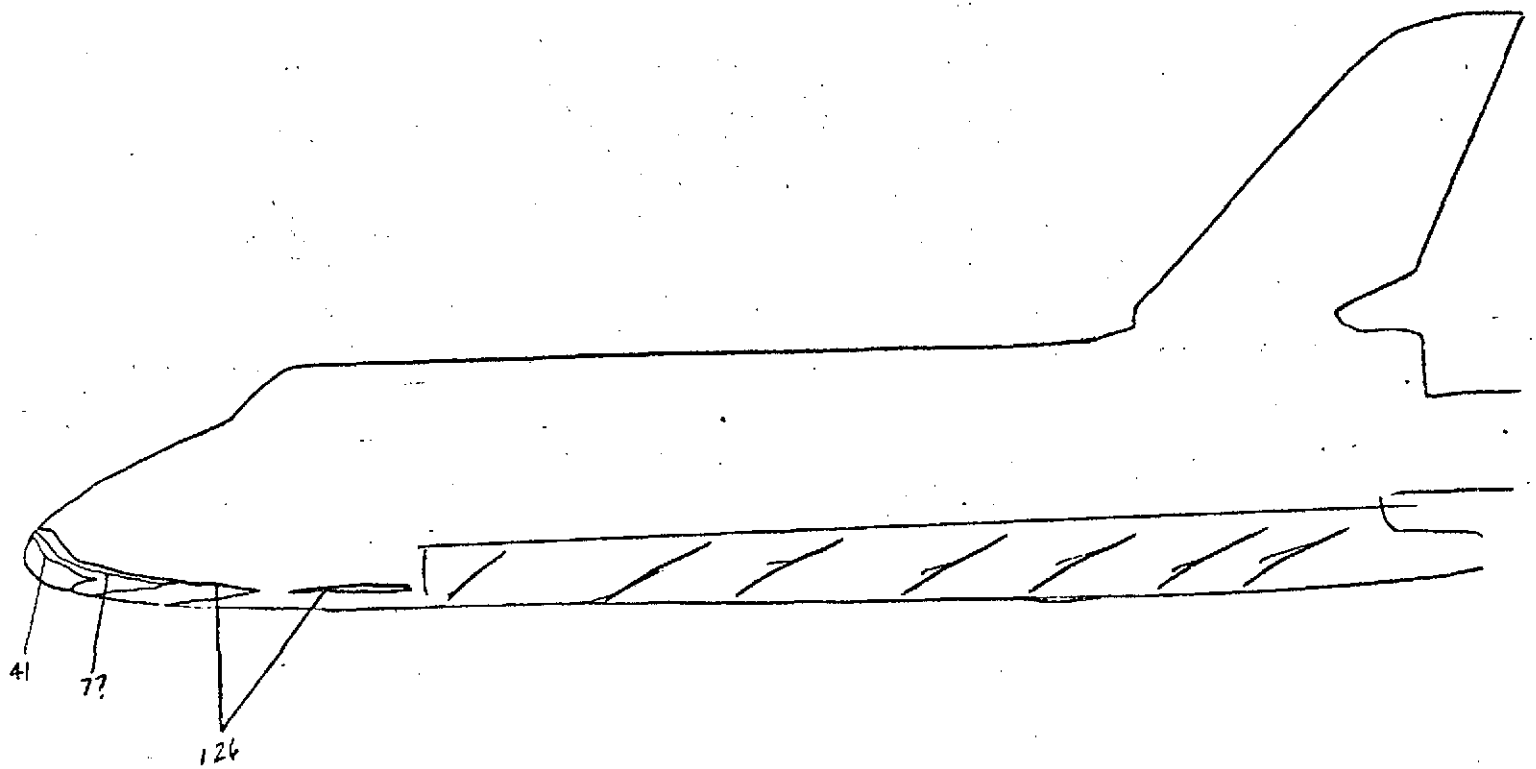

Isotherm	$h/h_{p=1'}$
41	0.291766
77	0.176917
126	0.133912

FIG. 185

CONFIG. 46-6

LENGTH (ft) = .638

SCALE .00593

FACILITY LRC/UDT

TEST OH42C (RPA)

RUN 4207

M_∞ = 8

P_{total} (psi) = 152

T_{total} (°F) = 760

T_{aw}/T_{total} = 0.90

R_N per foot = 1×10^6

$T_{phase\ change}$ (°F) = 250

α = 35

β = 0

ϕ = 0

Camera Coordinates (from model center, x-axis parallel w/ stream, + downstream)

x (in) =

y (in) =

z (in) =

q @ FRAME 5

WHD

MS-0.03E4937 $\frac{Btu}{ft^2}$ - sec - °F

HYD-EVCS

PHASE CHANGE TEST

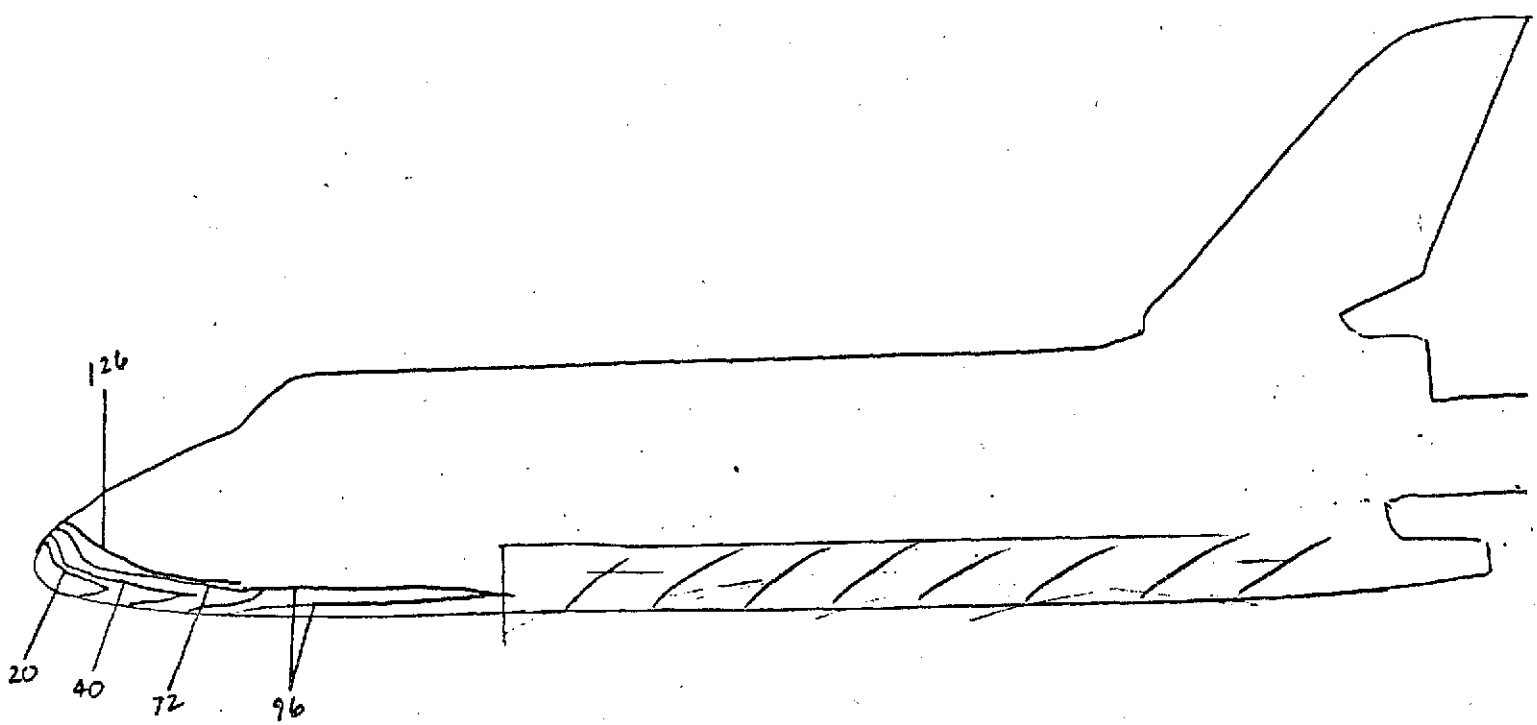

Isotherm	$h/h_{r=1}$
20	0.294879
40	0.208511
72	0.155415
96	0.134593
126	0.117453

FIG. 186

CONFIG. 46-5

LENGTH (ft) = .638

SCALE = .00593

FACILITY LRC/VDT

TEST OH42C (RPA)

RUN 4288

M_∞ = 8

P_{total} (psi) = 625

T_{total} (°F) = 875

T_{aw}/T_{total} = 0.90

R_N per foot = 3×10^6

$T_{phase\ change}$ (°F) = 350

α = 35

β = 0

ϕ = 0

Camera Coordinates (from model center, x-axis parallel w/ stream, + downstream)

x (in) =

y (in) =

z (in) =

Q @ FRAME 5

HS = 0.0722102 $\frac{Btu}{ft^2}$ - sec - °R

WHD

HVD-EVCS

(ASA Langley (Feb. 1971)