NASA SP-7039(08)
Section 1
Abstracts

NASA SP-7039(08) NASA Patent Abstracts Bibliography (Sect. 1 • Abstracts) JANUARY 1976

NASA PATENT ABSTRACTS BIBLIOGRAPHY

A CONTINUING BIBLIOGRAPHY

Section 1 • Abstracts

JANUARY 1976

CASE FILE COPY

NATIONAL AERONAUTICS AND SPACE ADMINISTRATION

ACCESSION NUMBER RANGES

Bibliography Number	*STAR Accession Numbers*
NASA SP-7039(04)	N69-20701–N73-33931
NASA SP-7039(05)	N74-10001–N74-21629
NASA SP-7039(06)	N74-21630–N74-35363
NASA SP-7039(07)	N75-10001–N75-21218
NASA SP-7039(08)	N75-21219–N75-34001

This bibliography was prepared by the NASA Scientific and Technical Information Facility operated for the National Aeronautics and Space Administration by Informatics Information Systems Company.

NASA SP-7039(08)
Section 1
Abstracts

NASA

PATENT ABSTRACTS BIBLIOGRAPHY

A CONTINUING BIBLIOGRAPHY

Section 1 • Abstracts

Annotated references to NASA-owned inventions covered by U.S. patents and applications for patent that were announced in *Scientific and Technical Aerospace Reports (STAR)* between July 1975 and December 1975.

Scientific and Technical Information Office JANUARY 1976
NATIONAL AERONAUTICS AND SPACE ADMINISTRATION
Washington, D.C.

This Supplement is available from the National Technical Information Service (NTIS), Springfield, Virginia 22161, for $3.00. For copies mailed to addresses outside the United States, add $2.50 per copy for handling and postage.

INTRODUCTION

Several thousand inventions result each year from the aeronautical and space research supported by the National Aeronautics and Space Administration. The inventions having important use in government programs or significant commercial potential are usually patented by NASA. These inventions cover practically all fields of technology and include many that have useful and valuable commercial application.

NASA inventions best serve the interests of the United States when their benefits are available to the public. In many instances, the granting of nonexclusive or exclusive licenses for the practice of these inventions may assist in the accomplishment of this objective. This bibliography is published as a service to companies, firms, and individuals seeking new, licensable products for the commercial market.

The *NASA Patent Abstracts Bibliography (NASA PAB)* is a semiannual NASA publication containing comprehensive abstracts and indexes of NASA-owned inventions covered by U.S. patents and applications for patent. The citations included in *NASA PAB* were originally published in NASA's *Scientific and Technical Aerospace Reports (STAR)* and cover *STAR* announcements made since May 1969.

For the convenience of the user, each issue of *NASA PAB* has a separately bound Abstract Section (Section 1) and Index Section (Section 2). Although each Abstract Section covers only the indicated six-month period, the Index Section is cumulative covering all NASA-owned inventions announced in *STAR* since May 1969. Thus a complete set of *NASA PAB* would consist of the Abstract Section of Issue 04 (January 1974), the Abstract Section for all subsequent issues, and the Index Section for the most recent issue.

The 180 citations published in this issue of the Abstract Section cover the period July 1975 through December 1975. The Index Section contains references to the 2905 citations covering the period May 1969 through December 1975.

ABSTRACT SECTION (SECTION 1)

This *PAB* issue incorporates the 1975 *STAR* category revisions which include 10 major subdivisions divided into 74 specific categories and one general category/division. (See Table of Contents for the scope note of each category under which are grouped appropriate NASA inventions.) This new scheme was devised in lieu of the 34 category divisions which were utilized in *PAB* supplements (01) through (06) covering *STAR* abstracts from May 1969 through January 1974. Each entry in the Abstract Section consists of a *STAR* citation accompanied by an abstract and a key illustration taken from the patent or application for patent drawing. Entries are arranged in subject category in order of the ascending NASA Accession Number originally assigned in *STAR* to the invention. The range of NASA Accession Numbers within each issue is printed on the inside front cover.

Abstract Citation Data Elements: Each of the abstract citations has several data elements useful for identification and indexing purposes, as follows:

NASA Accession Number
NASA Case Number
Inventor's Name

Title of Invention
U.S. Patent Application Serial Number
U.S. Patent Number (for issued patents only)
U.S. Patent Office Classification Number(s)
(for issued patents only)

These data elements appear in the citation of the abstract as depicted in the Typical Citation and Abstract reproduced below and are also used in the several indexes.

TYPICAL CITATION AND ABSTRACT FROM

PATENT ABSTRACTS BIBLIOGRAPHY

NASA SPONSORED DOCUMENT

NASA ACCESSION NUMBER

TITLE

INVENTORS

NASA CASE NUMBER

ABSTRACT

AVAILABLE ON MICROFICHE

SOURCE

US PATENT APPLICATIONS SERIAL NUMBER

AVAILABILITY

COSATI CODE

N75-16613*# National Aeronautics and Space Administration. Langley Research Center, Langley Station, Va.

VARIABLE DIHEDRAL SHUTTLE ORBITER Patent Application

Bernard Spencer, Jr., John W. Wilkey, Jr., and Beverly Z. Henry, Jr., inventors (to NASA) Filed 11 Feb. 1975 10 p

(NASA-Case-LAR-10706-1; US-Patent-Appl-SN-549239) Avail: NTIS HC $3.25 CSCL 22B

An aircraft configuration is described which yields efficient flight at both subsonic and hypersonic speeds and which permits the wings to be protected from the hostile heat environment of orbital reentry. The essential feature is a variable dihedral wing which may be folded out during flight to adjust the aircraft's flight characteristic as the speed decreases. During hypersonic flight the wings are folded upright against the fuselage, while for the lowest speed operation the wings are fully extended in a horizontal manner. Intermediate positions of extension are used for intermediate speed ranges. NASA

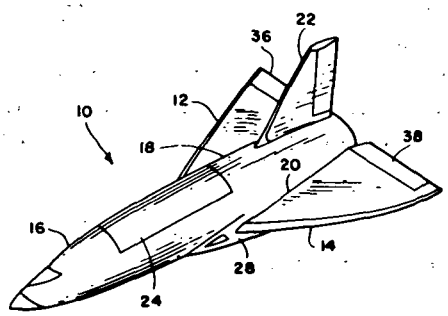

KEY ILLUSTRATION

INDEX SECTION (SECTION 2)

The Index Section is divided into five indexes which are cross-indexed and are useful in locating a single invention or groups of inventions.

Each of the five indexes utilizes basic data elements: (1) Subject Category Number, (2) NASA Accession Number, and (3) NASA Case Number, in addition to other specific index terms.

Subject Index: Lists all inventions according to appropriate alphabetized technical term and indicates the related NASA Case Number, the Subject Category Number, and the NASA Accession Number.

Inventor Index: Lists all inventions according to alphabetized names of inventors and indicates the related NASA Case Number, the Subject Category Number, and the NASA Accession Number.

Source Index: Lists all inventions according to alphabetized source of invention (i.e., name of contractor or government installation where invention was made) and indicates the related NASA Case Number, the Subject Category Number, and the NASA Accession Number.

Number Index: Lists inventions in order of ascending (1) NASA Case Number, (2) U.S. Patent Application Serial Number, (3) U.S. Patent Classification Number, and (4) U.S. Patent Number and indicates the related Subject Category Number and the NASA Accession Number.

Accession Number Index: Lists all inventions in order of ascending NASA Accession Number and indicates the related Subject Category Number, the NASA Case Number, the U.S. Patent Application Serial Number, the U.S. Patent Classification Number, and the U.S. Patent Number.

HOW TO USE THIS PUBLICATION TO IDENTIFY NASA INVENTIONS

To identify one or more NASA inventions within a specific technical field or subject, several techniques are possible when using the flexibility incorporated into the *NASA PAB.*

(1) *Using Subject Category:* To identify all NASA inventions in any one of the subject categories in this issue of *NASA PAB*, select the desired Subject Category in the Abstract Section (Section 1) and find the inventions abstracted thereunder. For previous *NASA PAB* issues, the Table of Contents to Section 1 should be examined as the subject categories were changed beginning with *NASA PAB(07).*

(2) *Using Subject Index:* To identify all NASA inventions listed under a desired technical subject index term, (A) turn to the cumulative Subject Index in the Index Section and find the invention(s) listed under the desired technical subject term. (B) Note the indicated Accession Number and the Subject Category Number. (C) Using the indicated Accession Number, turn to the inside front cover of the Index Section to determine which issue of the Abstract Section includes the Accession Number

desired. (D) To find the abstract of the particular invention in the issue of the Abstract Section selected, (i) use the Subject Category Number to locate the Subject Category and (ii) use the Accession Number to locate the desired invention within the Subject Category listing.

(3) *Using Patent Classification Index:* To identify all inventions covered by issued NASA patents (does not include applications for patent) within a desired Patent Office Classification, (A) turn to the Patent Classification Number in the Number Index of Section 2 and find the associated inventions(s), and (B) follow the instructions outlined in (2)(B), and (D) above.

PUBLIC AVAILABILITY OF COPIES OF PATENTS AND PATENT APPLICATIONS

Copies of U.S. patents may be purchased directly from the U.S. Patent Office, Washington, D.C. 20231, for fifty cents a copy.

Copies of pending NASA applications for patent abstracted in *NASA PAB* are sold by the National Technical Information Service. Springfield, Virginia 22161, at the price shown in the citation. Microfiche are sold at the established unit price of $2.25. When ordering copies of an application for patent from NTIS, the U.S. Patent Application Serial Number listed in the index or shown in the citation for each abstract should be used to identify the desired application for patent.

LICENSES FOR COMMERCIAL USE: INQUIRIES AND APPLICATIONS FOR LICENSE

NASA inventions, abstracted in *NASA PAB*, are available for nonexclusive or exclusive licensing in accordance with the NASA Patent Licensing Regulations. It is significant that all licenses for NASA inventions shall be by express written instruments and that no license will be granted or implied in a NASA invention except as provided in the NASA Patent Licensing Regulations.

Inquiries concerning the NASA Patent Licensing Program or the availability of licenses for the commercial use of NASA-owned inventions covered by U.S. patents or pending applications for patent should be forwarded to the NASA Patent Counsel of the NASA installation having cognizance of the specific invention, or the Assistant General Counsel for Patent Matters, Code GP, National Aeronautics and Space Administration, Washington, D.C. 20546. Inquiries should refer to the NASA Case Number, the Title of the Invention, and the U.S. Patent Number or the U.S. Application Serial Number assigned to the invention as shown in *NASA PAB*.

The NASA Patent Counsel having cognizance of the invention is determined by the first three letters or prefix of the NASA Case Number assigned to the invention. The addresses of NASA Patent Counsels are listed alongside the NASA Case Number prefix letters in the following table. Formal application of license must be submitted on the NASA Form, Application for NASA Patent License, which is available upon request from any NASA Patent Counsel.

NASA Case Number Prefix Letters	Address of Cognizant NASA Patent Counsel
ARC-xxxxx XAR-xxxxx	Ames Research Center Mail Code: 200-11A Moffett Field, California 94035 Telephone: (415)965-5104
ERC-xxxxx XER-xxxxx HQN-xxxxx XHQ-xxxxx	NASA Headquarters Mail Code: GP Washington, D.C. 20546 Telephone: (202)755-3954
GSC-xxxxx XGS-xxxxx	Goddard Space Flight Center Mail Code: 204 Greenbelt, Maryland 20771 Telephone: (301)982-2351
KSC-xxxxx XKS-xxxxx	John F. Kennedy Space Center Mail Code: AA-PAT Kennedy Space Center, Florida 32899 Telephone: (305)867-2544
LAR-xxxxx XLA-xxxxx	Langley Research Center Mail Code: 456 Langley Station Hampton, Virginia 23365 Telephone: (804)827-3725
LEW-xxxxx XLE-xxxxx	Lewis Research Center Mail Code: 500-311 21000 Brookpark Road Cleveland, Ohio 44135 Telephone: (216)433-6346
MSC-xxxxx XMS-xxxxx	Lyndon B. Johnson Space Center Mail Code: AM Houston, Texas 77058 Telephone: (713)483-4871
MFS-xxxxx XMF-xxxxx	George C. Marshall Space Flight Center Mail Code: CC01 Huntsville, Alabama 35812 Telephone: (205)453-0020
NPO-xxxxx XNP-xxxxx FRC-xxxxx XFR-xxxxx WOO-xxxxx	NASA Pasadena Office Mail Code: 180-601 4800 Oak Grove Drive Pasadena, California 91103 Telephone: (213)354-2700

PATENT LICENSING REGULATIONS

Title 14—AERONAUTICS AND SPACE

Chapter V—National Aeronautics and Space Administration

PART 1245—PATENTS

Subpart 2—Patent Licensing Regulations

1. Subpart 2 is revised in its entirety as follows:

Sec.

1245.200 Scope of subpart.
1245.201 Definitions.
1245.202 Basic considerations.
1245.203 Licenses for practical application of inventions.
1245.204 Other licenses.
1245.205 Publication of NASA inventions available for license.
1245.206 Application for nonexclusive license.
1245.207 Application for exclusive license.
1245.208 Processing applications for license.
1245.209 Royalties and fees.
1245.210 Reports.
1245.211 Revocation of licenses.
1245.212 Appeals.
1245.213 Litigation.
1245.214 Address of communications.

AUTHORITY: The provisions of this Subpart 2 issued under 42 U.S.C. 2457, 2473(b)(3).

§ 1245.200 Scope of subpart.

This Subpart 2 prescribes the terms, conditions, and procedures for licensing inventions covered by U.S. patents and patent applications for which the Administrator of the National Aeronautics and Space Administration holds title on behalf of the United States.

§ 1245.201 Definitions.

For the purpose of this subpart, the following definitions apply:

(a) "Invention" means an invention covered by a U.S. patent or patent application for which the Administrator of NASA holds title on behalf of the United States and which is designated by the Administration as appropriate for the grant of license(s) in accordance with this subpart.

(b) "To practice an invention" means to make or have made, use or have used, sell or have sold, or otherwise dispose of according to law any machine, article of manufacture or composition of matter physically embodying the invention, or to use or have used the process or method comprising the invention.

(c) "Practical application" means the manufacture in the case of a composition of matter or product, the use in the case of a process, or the operation in the case of a machine, under such conditions as to establish that the invention is being utilized and that its benefits are reasonably accessible to the public.

(d) "Special invention" means any invention designated by the NASA Assistant General Counsel for Patent Matters to be subject to short-form licensing procedures. An invention may be designated as a special invention when a determination is made that:

(1) Practical application has occurred and is likely to continue for the life of the patent and for which an exclusive license is not in force, or

(2) The public interest would be served by the expeditious granting of a nonexclusive license for practice of the invention by the public.

(e) The "Administrator" means the Administrator of the National Aeronautics and Space Administration, or his designee.

(f) "Government" means the Government of the United States of America.

(g) The "Inventions and Contributions Board" means the NASA Inventions and Contributions Board established by the Administrator of NASA within the Administration in accordance with section 305 of the National Aeronautics and Space Act of 1958 as amended (42 U.S.C. 2457).

§ 1245.202 Basic considerations.

(a) Much of the new technology resulting from NASA sponsored research and development in aeronautical and space activities has application in other fields. NASA has special authority and responsibility under the National Aeronautics and Space Act of 1958, as amended (42 U.S.C. 2451), to provide for the widest practical dissemination and utilization of this new technology. In addition, NASA has been given unique requirements to protect the inventions resulting from NASA activities and to promulgate licensing regulations to encourage commercial use of these inventions.

(b) NASA-owned inventions will best serve the interests of the United States when they are brought to practical application in the shortest time possible. Although NASA encourages the nonexclusive licensing of its inventions to promote competition and achieve their widest possible utilization, the commercial development of certain inventions calls for a substantial capital investment which private manufacturers may be unwilling to risk under a nonexclusive license. It is the policy of NASA to seek exclusive licensees when such licenses will provide the necessary incentive to the licensee to achieve early practical application of the invention.

(c) The Administrator, in determining whether to grant an exclusive license, will evaluate all relevant information submitted by applicants and all other persons and will consider the necessity for further technical and market development of the invention, the capabilities of prospective licensees, their proposed plans to undertake the required investment and development, the impact on competitors, and the benefits of the license to the Government and to the public. Preference for exclusive license shall be given to U.S. citizens or companies who intend to manufacture or use, in the case of a process, the invention in the United States of America, its territories and possessions. Consideration may also be given to assisting small businesses and minority business enterprises, as well as economically depressed, low income and labor surplus areas.

(d) All licenses for inventions shall be by express written instruments. No license shall be granted either expressly or by implication, for a NASA invention except as provided for in §§ 1245.203 and 1245.204 and in any existing or future treaty or agreement between the United States and any foreign government.

(e) Licenses for inventions covered by NASA-owned foreign patents and patent applications shall be granted in accordance with the NASA Foreign Patent Licensing Regulations (§ 1245.4).

§ 1245.203 Licenses for practical application of inventions.

(a) *General.* As an incentive to encourage practical application of inventions, licenses will be granted to responsible applicants according to the circumstances and conditions set forth in this section.

(b) *Nonexclusive licenses.* (1) Each invention will be made available to responsible applicants for nonexclusive, revocable licensing in accordance with § 1245.206, consistent with the provisions of any existing exclusive license.

(2) The duration of the license shall be for a period as specified in the license.

(3) The license shall require the licensee to achieve the practical application of the invention and to then practice the invention for the duration of the license.

(4) The license may be granted for all or less than all fields of use of the invention and throughout the United States of America, its territories and possessions, Puerto Rico, and the District of Columbia, or in any lesser geographic portion thereof.

(5) The license shall extend to the subsidiaries and affiliates of the licensee and shall be nonassignable without approval of the Administrator, NASA, except to the successor of that part of the licensee's business to which the invention pertains.

(c) *Short-form nonexclusive licenses.* A nonexclusive, revocable license for a special invention, as defined in § 1245.201 (d), shall be granted upon written request, to any applicant by the Patent Counsel of the NASA installation having cognizance of the invention.

(d) *Exclusive licenses.* (1) A limited exclusive license may be granted on an invention available for such licensing provided that:

(i) The Administrator has determined that: (*a*) The invention has not been brought to practical application by a nonexclusive licensee in the fields of use or in the geographical locations covered by the application for the exclusive license, (*b*) practical application of the invention in the fields of use or geographical locations covered by the application for the exclusive license is not likely to be achieved expeditiously by the further funding of the invention by the Government or under a nonexclusive license requested by any applicant pursuant to these regulations, and (c) the exclusive license will provide the necessary incentive to the licensee to achieve the practical application of the invention; and

(ii) Either a notice pursuant to

§ 1245.205 listing the invention as available for licensing has been published in the FEDERAL REGISTER for at least 9 months; or a patent covering the invention has been issued for at least 6 months. However, a limited exclusive license may be granted prior to the periods specified above if the Administrator determines that the public interest will best be served by the earlier grant of an exclusive license.

(2) The license may be granted for all or less than all fields of use of the invention, and throughout the United States of America, its territories and possessions, Puerto Rico, and the District of Columbia, or in any lesser geographic portion thereof.

(3) The exclusive period of the license shall be negotiated, but shall be for less than the terminal portion of the patent, and shall be related to the period necessary to provide a reasonable incentive to invest the necessary risk capital.

(4) The license shall require the licensee to practice the invention within a period specified in the license and then to achieve practical application of the invention.

(5) The license shall require the licensee to expend a specified minimum sum of money and/or to take other specified actions, within indicated period(s) after the effective date of the license, in an effort to achieve practical application of the invention.

(6) The license shall be subject to at least an irrevocable royalty-free right of the Government of the United States to practice and have practiced the invention throughout the world by or on behalf of the Government of the United States and on behalf of any foreign government pursuant to any existing or future treaty or agreement with the United States.

(7) The license may reserve to the Administrator, NASA, under the following circumstances, the right to require the granting of a sublicense to responsible applicant(s) on terms that are considered reasonable by the Administrator, taking into consideration the current royalty rates under similar patents and other pertinent facts: (i) To the extent that the invention is required for public use by Government regulation, or (ii) as may be necessary to fulfill health or safety needs, or (iii) for other purposes stipulated in the license.

(8) The license shall be nontransferable except to the successor of that part of the licensee's business to which the invention pertains.

(9) Subject to the approval of the Administrator, the licensee may grant sublicenses under the license. Each sublicense granted by an exclusive licensee shall make reference to and shall provide that the sublicense is subject to the terms of the exclusive license including the rights retained by the Government under the exclusive license. A copy of each sublicense shall be furnished to the Administrator.

(10) The license may be subject to such other reservations as may be in the public interest.

§ 1245.204 Other licenses.

(a) *License to contractor.* There is hereby granted to the contractor reporting an invention made in the performance of work under a contract of NASA in the manner specified in section 305(a) (1) or (2) of the National Aeronautics and Space Act of 1958 as amended (42 U.S.C. 2457(a) (1) or (2)), a revocable, nonexclusive, royalty-free license for the practice of such invention, together with the right to grant sublicenses of the same scope to the extent the contractor was legally obligated to do so at the time the contract was awarded. Such license and right is nontransferable except to the successor of that part of the contractor's business to which the invention pertains.

(b) *Miscellaneous licenses.* Subject to any outstanding licenses, nothing in this subpart 2 shall preclude the Administrator from granting other licenses for inventions, when he determines that do so would provide for an equitable distribution of rights. The following exemplify circumstances wherein such licenses may be granted:

(1) In consideration of the settlement of an interference;

(2) In consideration of a release of a claim of infringement; or

(3) In exchange for or as part of the consideration for a license under adversely held patent(s).

§ 1245.205 Publication of NASA inventions available for license.

(a) A notice will be perodically published in the FEDERAL REGISTER listing inventions available for licensing. Abstracts of the inventions will also be published in the NASA Scientific and Technical Aerospace Reports (STAR) and other NASA publications.

(b) Copies of pending patent applications for inventions abstracted in STAR may be purchased from the National Technical Information Service, Springfield, Va. 22151.

§ 1245.206 Application for nonexclusive license.

(a) *Submission of application.* An application for nonexclusive license under § 1245.203(b) or a short-form nonexclusive license for special inventions under § 1245.203(c) shall be addressed to the NASA Patent Counsel of the NASA installation having cognizance over the NASA invention for which a license is desired or to the NASA Assistant General Counsel for Patent Matters.

(b) *Contents of an application for nonexclusive license.* An application for nonexclusive license under § 1245.203(b) shall include:

(1) Identification of invention for which license is desired, including the NASA patent case number, patent application serial number of patent number, title and date, if known;

(2) Name and address of the person, company or organization applying for license and whether the applicant is a U.S. citizen or a U.S. corporation;

(3) Name and address of representative of applicant to whom correspondence should be sent;

(4) Nature and type of applicant's business;

(5) Number of employees;

(6) Purpose for which license is desired;

(7) A statement that contains the applicant's best knowledge of the extent to which the invention is being practiced by private industry and the Government;

(8) A description of applicant's capability and plan to undertake the development and marketing required to achieve the practical application of the invention, including the geographical location where the applicant plans to manufacture or use, in the case of a process, the invention; and

(9) A statement indicating the minimum term of years the applicant desires to be licensed.

(c) *Contents of an application for a short-form nonexclusive license.* An application for a short-form nonexclusive license under § 1245.203(c) for a special invention shall include:

(1) Identification of invention for which license is desired, including the NASA patent case number, patent application serial number or patent number, title and date, if known;

(2) Name and address of company or organization applying for license; and

(3) Name and address of representative of applicant to whom correspondence should be sent.

§ 1245.207 Application for exclusive license.

(a) *Submission of application.* An application for exclusive license under § 1245.203(d) may be submitted to NASA at any time. An application for exclusive license shall be addressed to the NASA Assistant General Counsel for Patent Matters.

(b) *Contents of an application for exclusive license.* In addition to the requirements set forth in § 1245.206(b), the application for an exclusive license shall include:

(1) Applicant's status, if any, in any one or more of the following categories:

(i) Small business firm;

(ii) Minority business enterprise;

(iii) Location in a surplus labor area;

(iv) Location in a low-income urban area; and

(v) Location in an area designed by the Government as economically depressed.

(2) A statement indicating the time, expenditure, and other acts which the applicant considers necessary to achieve practical application of the invention, and the applicant's offer to invest that sum and to perform such acts if the license is granted;

(3) A statement whether the applicant would be willing to accept a license for all or less than all fields of use of the invention throughout the United States of America, its territories and possessions, Puerto Rico, and the District of Columbia, or in any lesser geographic portion thereof.

(4) A statement indicating the amount of royalty fees or other consideration, if any, the applicant would be willing to pay the Government for the exclusive license; and

(5) Any other facts which the applicant believes to show it to be in the interests of the United States of America for the Administrator to grant an exclusive license rather than a nonexclusive li-

cense and that such an exclusive license should be granted to the applicant.

§ 1245.208 Processing applications for license.

(a) *Initial review.* Applications for nonexclusive and exclusive licenses under §§ 1245.206 and 1245.207 will be reviewed by the Patent Counsel of the NASA installation having cognizance for the invention and the NASA Assistant General Counsel for Patent Matters, to determine the conformity and appropriateness of the application for license and the availability of the specific invention for the license requested. The Assistant General Counsel for Patent Matters will forward all applications for license conforming to §§ 1245.206(b) and 1245.207(b) to the NASA Inventions and Contributions Board when the invention is available for consideration of the requested license. Prior to forwarding applications for exclusive licenses to the Inventions and Contributions Board, notice in writing will be given to each nonexclusive licensee for the specific invention advising of the receipt of the application for the exclusive license and providing each nonexclusive licensee with a 30-day period for submitting either evidence that practical application of the invention has occurred or is about to occur or, an application for an exclusive license for the invention.

(b) *Recommendations of Inventions and Contributions Board.* The Inventions and Contributions Board shall, in accordance with the basic considerations set forth in §§ 1245.202 and 1245.203, evaluate all applications for license forwarded by the Assistant General Counsel for Patent Matters. Based upon the facts presented to the Inventions and Contributions Board in the application and any other facts in its possession, the Inventions and Contributions Board shall recommend to the Administrator: (1) Whether a nonexclusive or exclusive license should be granted, (2) the identity of the licensee, and (3) any special terms or conditions of the license.

(c) *Determination of Administrator and grant of nonexclusive licenses.* The Administrator shall review the recommendations of the Inventions and Contributions Board and shall determine whether to grant the nonexclusive license as recommended by the Board. If the Administrator determines to grant the license, the license will be granted upon the negotiation of the appropriate terms and conditions of the Office of General Counsel.

(d) *Determination of Administrator and grant of exclusive licenses*—(1) *Notice.* If the Administrator determines that the best interest of the United States will be served by the granting of an exclusive license in accordance with the basic considerations set forth in §§ 1245.202 and 1245.203, a notice shall be published in the FEDERAL REGISTER announcing the intent to grant the exclusive license, the identification of the invention, special terms or conditions of the proposed license, and a statement that NASA will grant the exclusive license unless within 30 days of the publication of such notice the Inventions and Contributions Board receives in writing any of the following together with supporting documentation:

(i) A statement from any person setting forth reasons why it would not be in the best interest of the United States to grant the proposed exclusive license; or

(ii) An application for a nonexclusive license under such invention, in accordance with § 1245.206(b), in which applicant states that he has already brought or is likely to bring the invention to practical application within a reasonable period.

The Inventions and Contributions Board shall, upon receipt of a written request within the 30 days' notice period, grant an extension of 30 days for the submission of the documents designated above.

(2) *Recommendation of Inventions and Contributions Board.* Upon the expiration of the period required by subparagraph (1) of this paragraph, the Board shall review all written responses to the notice and shall then recommend to the Administrator whether to grant the exclusive license as the Board initially recommended or whether a different form of license, if any, should instead be granted.

(3) *Grant of exclusive licenses.* The Administrator shall review the Board's recommendation and shall determine if the interest of the United States would best be served by the grant of an exclusive license as recommended by the Board. If the Administrator determines to grant the exclusive license, the license will be granted upon the negotiation of the appropriate terms and conditions by the Office of General Counsel.

§ 1245.209 Royalties and fees.

(a) Normally, a nonexclusive license for the practical application of an invention granted to a U.S. citizen or company will not require the payment of royalties; however, NASA may require other consideration.

(b) An exclusive license for an invention may require the payment of royalties, fees or other consideration when the licensing circumstances and the basic considerations in § 1245.202, considered together, indicate that it is in the public interest to do so.

§ 1245.210 Reports.

A license shall require the licensee to submit periodic reports of his efforts to work the invention. The reports shall contain information within his knowledge, or which he may acquire under normal business practice, pertaining to the commercial use that is being made of the invention and such other information which the Administrator may determine pertinent to the licensing program and which is specified in the license.

§ 1245.211 Revocation of licenses.

(a) Any license granted pursuant to § 1245.203 may be revoked, either in part or in its entirety, by the Administrator if in his opinion the licensee at any time shall fail to use adequate efforts to bring to or achieve practical application of the invention in accordance with the terms of the license, or if the licensee at any time shall default in making any report required by the license, or shall make any false report, or shall commit any breach of any covenant or agreement therein contained, and shall fail to remedy any such default, false report, or breach within 30 days after written notice, or if the patent is deemed unenforceable either by the Attorney General or a final decision of a U.S. court.

(b) Any license granted pursuant to § 1245.204(a) may be revoked, either in part or in its entirety, by the Administrator if in his opinion such revocation is necessary to achieve the earliest practical application of the invention pursuant to an application for exclusive license submitted in accordance with § 1245.207, or the licensee at any time shall breach any covenant or agreement contained in the license, and shall fail to remedy any such breach within 30 days after written notice thereof.

(c) Before revoking any license granted pursuant to this Subpart 2 for any cause, there will be furnished to the licensee a written notice of intention to revoke the license, and the licensee will be allowed 30 days after such notice in which to appeal and request a hearing before the Inventions and Contributions Board on the question of revocation. After a hearing, the Inventions and Contributions Board shall transmit to the Administrator the record of proceedings, its findings of fact, and its recommendation whether the license should be revoked either in part or in its entirety. The Administrator shall review the recommendation of the Board and determine whether to revoke the license in part or in its entirety. Revocation of a license shall include revocation of all sublicenses which have been granted.

§ 1245.212 Appeals.

Any person desiring to file an appeal pursuant to § 1245.211(c) shall address the appeal to Chairman, Inventions and Contributions Board. Any person filing an appeal shall be afforded an opportunity to be heard before the Inventions and Contributions Board, and to offer evidence in support of his appeal. The procedures to be followed in any such matter shall be determined by the Administrator. The Board shall make findings of fact and recommendations with respect to disposition of the appeal. The decision on the appeal shall be made by the Administrator, and such decision shall be final and conclusive, except on questions of law, unless determined by a court of competent jurisdiction to have been fraudulent, or capricious, or arbitrary, or so grossly erroneous as necessarily to imply bad faith, or not supported by substantial evidence.

§ 1245.213 Litigation.

An exclusive licensee shall be granted the right to sue at his own expense any party who infringes the rights set forth in his license and covered by the licensed patent. The licensee may join the Government, upon consent of the Attorney General, as a party complainant in such suit, but without expense to the Government and the licensee shall pay costs and any final judgment or decree that may be rendered against the Govern-

ment in such suit. The Government shall also have an absolute right to intervene in any such suit at its own expense. The licensee shall be obligated to promptly furnish to the Government, upon request, copies of all pleadings and other papers filed in any such suit and of evidence adduced in proceedings relating to the licensed patent including, but not limited to, negotiations for settlement and agreements settling claims by a licensee based on the licensed patent, and all other books, documents, papers, and records pertaining to such suit. If, as a result of any such litigation, the patent shall be declared invalid, the licensee shall have the right to surrender his license and be relieved from any further obligation thereunder.

§ 1245.214 **Address of communications.**

(a) Communications to the Assistant General Counsel for Patent Matters in accordance with §§ 1245.206 and 1245.207 and requests for information concerning licenses for NASA inventions should be addressed to the Assistant General Counsel for Patent Matters, Code GP, National Aeronautics and Space Administration, Washington, D.C. 20546.

(b) Communications to the Inventions and Contributions Board in accordance with §§ 1245.208, 1245.211, and 1245.212 should be addressed to Chairman, Inventions and Contributions Board, National Aeronautics and Space Administration, Washington, D.C. 20546.

Effective date. The regulations set forth in this subpart 2 are effective April 1, 1972.

JAMES C. FLETCHER,
Administrator.

NASA FOREIGN PATENT LICENSING REGULATIONS

Selected NASA inventions are also available for licensing in countries other than the United States in accordance with the NASA Foreign Patent Licensing Regulation (14 C.F.R. 1245.4), a copy of which is available from any NASA Patent Counsel.

TABLE OF CONTENTS

Section 1•Abstracts

AERONAUTICS

Includes aeronautics (general); aerodynamics; air transportation and safety; aircraft communications and navigation; aircraft design, testing and performance; aircraft instrumentation; aircraft propulsion and power; aircraft stability and control; and research and support facilities (air).

For related information see also *Astronautics*.

01 AERONAUTICS (GENERAL) N.A.

02 AERODYNAMICS 1

Includes aerodynamics of bodies, combinations, wings, rotors, and control surfaces; and internal flow in ducts and turbomachinery.

For related information see also *34 Fluid Mechanics and Heat Transfer*.

03 AIR TRANSPORTATION AND SAFETY 1

Includes passenger and cargo air transport operations; and aircraft accidents.

For related information see also *16 Space Transportation* and *85 Urban Technology and Transportation*.

04 AIRCRAFT COMMUNICATIONS AND NAVIGATION N.A.

Includes digital and voice communication with aircraft; air navigation systems (satellite and ground based); and air traffic control.

For related information see also *17 Spacecraft Communications, Command and Tracking* and *32 Communications*.

05 AIRCRAFT DESIGN, TESTING AND PERFORMANCE 2

Includes aircraft simulation technology.

For related information see also *18 Spacecraft Design, Testing and Performance* and *39 Structural Mechanics*.

06 AIRCRAFT INSTRUMENTATION N.A.

Includes cockpit and cabin display devices; and flight instruments.

For related information see also *19 Spacecraft Instrumentation* and *35 Instrumentation and Photography*.

07 AIRCRAFT PROPULSION AND POWER 3

Includes prime propulsion systems and systems components, e.g., gas turbine engines and compressors; and on-board auxiliary power plants for aircraft.

For related information see also *20 Spacecraft Propulsion and Power, 28 Propellants and Fuels,* and *44 Energy Production and Conversion*.

08 AIRCRAFT STABILITY AND CONTROL N.A.

Includes aircraft handling qualities; piloting; flight controls; and autopilots.

09 RESEARCH AND SUPPORT FACILITIES (AIR) 3

Includes airports, hangars and runways; aircraft repair and overhaul facilities; wind tunnels; shock tube facilities; and engine test blocks.

For related information see also *14 Ground Support Systems and Facilities (Space)*.

ASTRONAUTICS

Includes astronautics (general); astrodynamics; ground support systems and facilities (space); launch vehicles and space vehicles; space transportation; spacecraft communications, command and tracking; spacecraft design, testing and performance; spacecraft instrumentation; and spacecraft propulsion and power.

For related information see also *Aeronautics*.

12 ASTRONAUTICS (GENERAL) 5

For extraterrestrial exploration see *91 Lunar and Planetary Exploration*.

13 ASTRODYNAMICS N.A.

Includes powered and free-flight trajectories; and orbit and launching dynamics.

14 GROUND SUPPORT SYSTEMS AND FACILITIES (SPACE) 5

Includes launch complexes, research and production facilities; ground support equipment, e.g., mobile transporters; and simulators.

For related information see also *09 Research and Support Facilities (Air)*.

15 LAUNCH VEHICLES AND SPACE VEHICLES N.A.

Includes boosters; manned orbital laboratories; reusable vehicles; and space stations.

16 SPACE TRANSPORTATION N.A.

Includes passenger and cargo space transportation, e.g., shuttle operations; and rescue techniques.

For related information see also *03 Air Transportation and Safety* and *85 Urban Technology and Transportation*.

17 SPACECRAFT COMMUNICATIONS, COMMAND AND TRACKING 6

Includes telemetry; space communications networks; astronavigation; and radio blackout.

For related information see also *04 Aircraft Communications and Navigation* and *32 Communications*.

18 SPACECRAFT DESIGN, TESTING AND PERFORMANCE 6

Includes spacecraft thermal and environmental control; and attitude control.

For life support systems see *54 Man/System Technology and Life Support*. For related information see also *05 Aircraft Design, Testing and Performance* and *39 Structural Mechanics*.

19 SPACECRAFT INSTRUMENTATION 7
For related information see also *06 Aircraft Instrumentation* and *35 Instrumentation and Photography*.

20 SPACECRAFT PROPULSION AND POWER 8
Includes main propulsion systems and components, e.g., rocket engines; and spacecraft auxiliary power sources.
For related information see also *07 Aircraft Propulsion and Power, 28 Propellants and Fuels,* and *44 Energy Production and Conversion*.

CHEMISTRY AND MATERIALS
Includes chemistry and materials (general); composite materials; inorganic and physical chemistry; metallic materials; nonmetallic materials; and propellants and fuels.

23 CHEMISTRY AND MATERIALS (GENERAL) 8
Includes biochemistry and organic chemistry.

24 COMPOSITE MATERIALS 9
Includes laminates.

25 INORGANIC AND PHYSICAL CHEMISTRY 10
Includes chemical analysis, e.g., chromatography; combustion theory; electrochemistry; and photochemistry.
For related information see also *77 Thermodynamics and Statistical Physics*.

26 METALLIC MATERIALS 10
Includes physical, chemical, and mechanical properties of metals, e.g., corrosion; and metallurgy.

27 NONMETALLIC MATERIALS 11
Includes physical, chemical, and mechanical properties of plastics, elastomers, lubricants, polymers, textiles, adhesives, and ceramic materials.

28 PROPELLANTS AND FUELS N.A.
Includes rocket propellants, igniters, and oxidizers; storage and handling; and aircraft fuels.
For related information see also *07 Aircraft Propulsion and Power, 20 Spacecraft Propulsion and Power,* and *44 Energy Production and Conversion*.

ENGINEERING
Includes engineering (general); communications; electronics and electrical engineering; fluid mechanics and heat transfer; instrumentation and photography; lasers and masers; mechanical engineering; quality assurance and reliability; and structural mechanics.
For related information see also *Physics*.

31 ENGINEERING (GENERAL) 12
Includes vacuum technology; control engineering; display engineering; and cryogenics.

32 COMMUNICATIONS 13
Includes land and global communications; communications theory; and optical communications.
For related information see also *04 Aircraft Communications and Navigation* and *17 Spacecraft Communications, Command and Tracking*.

33 ELECTRONICS AND ELECTRICAL ENGINEERING 17
Includes test equipment and maintainability; components, e.g., tunnel diodes and transistors; microminiaturization; and integrated circuitry.
For related information see also *60 Computer Operations and Hardware* and *76 Solid-State Physics*.

34 FLUID MECHANICS AND HEAT TRANSFER 25
Includes boundary layers; hydrodynamics; fluidics; mass transfer; and ablation cooling.
For related information see also *02 Aerodynamics* and *77 Thermodynamics and Statistical Physics*.

35 INSTRUMENTATION AND PHOTOGRAPHY 26
Includes remote sensors; measuring instruments and gages; detectors; cameras and photographic supplies; and holography.
For aerial photography see *43 Earth Resources*. For related information see also *06 Aircraft Instrumentation* and *19 Spacecraft Instrumentation*.

36 LASERS AND MASERS 36
Includes parametric amplifiers.

37 MECHANICAL ENGINEERING N.A.
Includes auxiliary systems (non-power); machine elements and processes; and mechanical equipment.

38 QUALITY ASSURANCE AND RELIABILITY N.A.
Includes product sampling procedures and techniques; and quality control.

39 STRUCTURAL MECHANICS 44
Includes structural element design and weight analysis; fatigue; and thermal stress.
For applications see *05 Aircraft Design, Testing and Performance* and *18 Spacecraft Design, Testing and Performance*.

GEOSCIENCES
Includes geosciences (general); earth resources; energy production and conversion; environment pollution; geophysics; meteorology and climatology; and oceanography.
For related information see also *Space Sciences*.

42 GEOSCIENCES (GENERAL) N.A.

43 EARTH RESOURCES **N.A.**
Includes remote sensing of earth resources by aircraft and spacecraft; photogrammetry; and aerial photography.
For instrumentation see *35 Instrumentation and Photography.*

44 ENERGY PRODUCTION AND CONVERSION **45**
Includes specific energy conversion systems, e.g., fuel cells and batteries; global sources of energy; fossil fuels; geophysical conversion; hydroelectric power; and wind power.
For related information see also *07 Aircraft Propulsion and Power, 20 Spacecraft Propulsion and Power, 28 Propellants and Fuels,* and *85 Urban Technology and Transportation.*

45 ENVIRONMENT POLLUTION **47**
Includes air, noise, thermal and water pollution; environment monitoring; and contamination control.

46 GEOPHYSICS **N.A.**
Includes aeronomy; upper and lower atmosphere studies; ionospheric and magnetospheric physics; and geomagnetism.
For space radiation see *93 Space Radiation.*

47 METEOROLOGY AND CLIMATOLOGY **N.A.**
Includes weather forecasting and modification.

48 OCEANOGRAPHY **N.A.**
Includes biological, dynamic and physical oceanography; and marine resources.

LIFE SCIENCES

Includes life sciences (general); aerospace medicine; behavioral sciences; man/system technology and life support; and planetary biology.

51 LIFE SCIENCES (GENERAL) **48**
Includes genetics.

52 AEROSPACE MEDICINE **49**
Includes physiological factors; biological effects of radiation; and weightlessness.

53 BEHAVIORAL SCIENCES **N.A.**
Includes psychological factors; individual and group behavior; crew training and evaluation; and psychiatric research.

54 MAN/SYSTEM TECHNOLOGY AND LIFE SUPPORT **N.A.**
Includes human engineering; biotechnology; and space suits and protective clothing.

55 PLANETARY BIOLOGY **N.A.**
Includes exobiology; and extraterrestrial life.

MATHEMATICAL AND COMPUTER SCIENCES

Includes mathematical and computer sciences (general); computer operations and hardware; computer programming and software; computer systems; cybernetics; numerical analysis; statistics and probability; systems analysis; and theoretical mathematics.

59 MATHEMATICAL AND COMPUTER SCIENCES (GENERAL) **N.A.**

60 COMPUTER OPERATIONS AND HARDWARE **N.A.**
Includes computer graphics and data processing.
For components see *33 Electronics and Electrical Engineering.*

61 COMPUTER PROGRAMMING AND SOFTWARE **N.A.**
Includes computer programs, routines, and algorithms.

62 COMPUTER SYSTEMS **N.A.**
Includes computer networks.

63 CYBERNETICS **52**
Includes feedback and control theory.
For related information see also *54 Man/System Technology and Life Support.*

64 NUMERICAL ANALYSIS **N.A.**
Includes iteration, difference equations, and numerical approximation.

65 STATISTICS AND PROBABILITY **N.A.**
Includes data sampling and smoothing; Monte Carlo method; and stochastic processes.

66 SYSTEMS ANALYSIS **N.A.**
Includes mathematical modeling; network analysis; and operations research.

67 THEORETICAL MATHEMATICS **N.A.**
Includes topology and number theory.

PHYSICS

Includes physics (general); acoustics; atomic and molecular physics; nuclear and high-energy physics; optics; plasma physics; solid-state physics; and thermodynamics and statistical physics.
For related information see also *Engineering.*

70 PHYSICS (GENERAL) **N.A.**
For geophysics see *46 Geophysics.* For astrophysics see *90 Astrophysics.* For solar physics see *92 Solar Physics.*

71 ACOUSTICS N.A.
Includes sound generation, transmission, and attenuation.
For noise pollution see *45 Environment Pollution.*

72 ATOMIC AND MOLECULAR PHYSICS N.A.
Includes atomic structure and molecular spectra.

73 NUCLEAR AND HIGH-ENERGY PHYSICS 53
Includes elementary and nuclear particles; and reactor theory.
For space radiation see *93 Space Radiation.*

74 OPTICS 54
Includes light phenomena.

75 PLASMA PHYSICS N.A.
Includes magnetohydrodynamics and plasma fusion.
For ionospheric plasmas see *46 Geophysics.* For space plasmas see *90 Astrophysics.*

76 SOLID-STATE PHYSICS 55
Includes superconductivity.
For related information see also *33 Electronics and Electrical Engineering* and *36 Lasers and Masers.*

77 THERMODYNAMICS AND STATISTICAL PHYSICS N.A.
Includes quantum mechanics; and Bose and Fermi statistics.
For related information see also *25 Inorganic and Physical Chemistry* and *34 Fluid Mechanics and Heat Transfer.*

SOCIAL SCIENCES

Includes social sciences (general); administration and management; documentation and information science; economics and cost analysis; law and political science; and urban technology and transportation.

80 SOCIAL SCIENCES (GENERAL) N.A.
Includes educational matters.

81 ADMINISTRATION AND MANAGEMENT N.A.
Includes management planning and research.

82 DOCUMENTATION AND INFORMATION SCIENCE N.A.
Includes information storage and retrieval technology; micrography; and library science.
For computer documentation see *61 Computer Programming and Software.*

83 ECONOMICS AND COST ANALYSIS N.A.
Includes cost effectiveness studies.

84 LAW AND POLITICAL SCIENCE N.A.
Includes space law; international law; international cooperation; and patent policy.

85 URBAN TECHNOLOGY AND TRANSPORTATION N.A.
Includes applications of space technology to urban problems; technology transfer; technology assessment; and surface and mass transportation.
For related information see *03 Air Transportation and Safety, 16 Space Transportation,* and *44 Energy Production and Conversion.*

SPACE SCIENCES

Includes space sciences (general); astronomy; astrophysics; lunar and planetary exploration; solar physics; and space radiation.
For related information see also *Geosciences.*

88 SPACE SCIENCES (GENERAL) N.A.

89 ASTRONOMY N.A.
Includes radio and gamma-ray astronomy; celestial mechanics; and astrometry.

90 ASTROPHYSICS N.A.
Includes cosmology; and interstellar and interplanetary gases and dust.

91 LUNAR AND PLANETARY EXPLORATION N.A.
Includes planetology; and manned and unmanned flights.
For spacecraft design see *18 Spacecraft Design, Testing and Performance.* For space stations see *15 Launch Vehicles and Space Vehicles.*

92 SOLAR PHYSICS N.A.
Includes solar activity, solar flares, solar radiation and sunspots.

93 SPACE RADIATION N.A.
Includes cosmic radiation; and inner and outer earth's radiation belts.
For biological effects of radiation see *52 Aerospace Medicine.* For theory see *73 Nuclear and High-Energy Physics.*

GENERAL

99 GENERAL N.A.

Note: N.A. means that no abstracts were assigned to this category for this issue.

Section 2 • Indexes

SUBJECT INDEX
PERSONAL AUTHOR INDEX
CORPORATE SOURCE INDEX
CONTRACT NUMBER INDEX
REPORT/ACCESSION INDEX

JANUARY 1976 (Supplement 8)

NASA Patent Abstracts Bibliography

A Semiannual Publication of the National Aeronautics and Space Administration

02 AERODYNAMICS

Includes aerodynamics of bodies, combinations, wings, rotors, and control surfaces; and internal flow in ducts and turbomachinery. For related information see also *34 Fluid Mechanics and Heat Transfer.*

N75-23476*# National Aeronautics and Space Administration. Lyndon B. Johnson Space Center, Houston, Tex.
SURFACE FINISHING Patent Application
Jack A. Kinzler, James T. Heffernan, Leroy G. Fehrenkamp, and William S. Lee, inventors (to NASA) Filed 16 Apr. 1975 26 p
(NASA-Case-MSC-12631-1; US-Patent-Appl-SN-568541) Avail: NTIS HC $3.75 CSCL 01C

An airfoil configuration and manufacturing process was designed to reduce or eliminate air turbulence created by surface irregularities in metal due to rivets, wrinkles, and butt-joints. The metal surface of an airfoil was cleaned, then coated with a thin layer of a fluid adhesive over which a sheet of thin plastic film was stretched. Tension was applied to the film and the resultant surface was squeezed to cause the adhesive to conform to the irregularities, remove any bubbles, and smooth out any wrinkles in the film. The adhesive was then allowed to set. The resulting surface is smooth and relatively free of the normal irregularities present in the standard metal airfoil, particularly for low speed aircraft. NASA

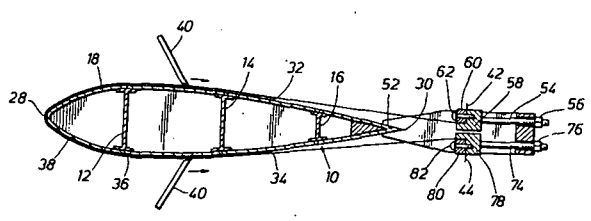

03 AIR TRANSPORTATION AND SAFETY

Includes passenger and cargo air transport operations; and aircraft accidents. For related information see also *16 Space Transportation* and *85 Urban Technology and Transportation.*

N75-30132* National Aeronautics and Space Administration. Pasadena Office, Calif.
SATELLITE AIDED VEHICLE AVOIDANCE SYSTEM Patent
Ernest R. Steele, inventor (to NASA) Issued 19 Aug. 1975 11 p Filed 21 Jan. 1972
(NASA-Case-ERC-10419-1; US-Patent-3,900,847; US-Patent-Appl-SN-219722; US-Patent-Class-343-6.5R; US-Patent-Class-343-112CA) Avail: US Patent Office CSCL 17G

An improved satellite aided vehicle avoidance system is described. The exact range from a protected vehicle to an intruding vehicle with mutual collision heading and velocity is derived without signal transmission by the protected vehicle or use of synchronized time reference devices by a repeated series of signals broadcast from a satellite to all participating vehicles. An improved, reliable, and cost effective system is provided for aiding a vehicle operator to avoid collision with intruding aircraft.
Official Gazette of the U.S. Patent Office

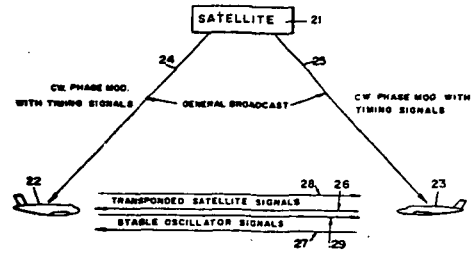

05 AIRCRAFT DESIGN, TESTING AND PERFORMANCE

Includes aircraft simulation technology. For related information see also *18 Spacecraft Design, Testing and Performance* and *39 Structural Mechanics.*

N75-24716* National Aeronautics and Space Administration. Lyndon B. Johnson Space Center, Houston, Tex.
INSULATED ELECTROCARDIOGRAPHIC ELECTRODES Patent
Robert M. David (Tex. Technol. Univ., Lubbock) and William A. Portnoy, inventors (to NASA) (Tex. Technol. Univ., Lubbock) Issued 13 May 1975 8 p Filed 4 Apr. 1973 Supersedes N73-21151 (11 - 12, p 1374) Sponsored by NASA
(NASA-Case-MSC-14339-1; US-Patent-3,882,846; US-Patent-Appl-SN-347953; US-Patent-Class-128.2.06E; US-Patent-Class-128-2.06B; US-Patent-Class-128-DIG.4) Avail: US Patent Office CSCL 06B

An integrated system is disclosed including an insulated electrode and an impedance transformer which can be assembled in a small plastic housing and used for the acquisition of electrocardiographic data. The electrode may be employed without a paste electrolyte and may be attached to the body for extended usage without producing skin reaction. The electrode comprises a thin layer of suitable nontoxic dielectric material preferably deposited by radio frequency sputtering onto a conductive substrate. The impedance transformer preferably comprises an operational amplifier having an FET input stage connected in the unity gain configuration which provides a very low lower cut-off frequency, a high input impedance with a very small input bias current, a low output impedance, and a high signal-to-noise ratio. Official Gazette of the U.S. Patent Office

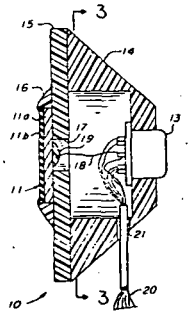

N75-25914* National Aeronautics and Space Administration. Langley Research Center, Langley Station, Va.
HIGH LIFT AIRCRAFT Patent
Willard S. Blanchard, Jr. and Joseph L. Johnson, Jr., inventors (to NASA) Issued 20 May 1975 6 p Filed 5 Jun. 1973 Supersedes N73-26007 (11-17, p 1980)
(NASA-Case-LAR-11252-1; US-Patent-3,884,432; US-Patent-Appl-SN-367268; US-Patent-Class-244-15; US-Patent-Class-D12-76; US-Patent-Class-244-13; US-Patent-Class-244-42DA; US-Patent-Class-244-55) Avail: US Patent Office CSCL 01C

An aerodynamically balanced high-lift aircraft is proposed in which the problems of large nose-down pitching moments generated by the flap high-lift forces, the loss of trim lift during high-lift flight and the yawing moments caused by the loss of an engine are solved without the use of large horizontal and vertical tails. A wing is carried by and bounced on the tips by spaced-parallel fuselages; horizontal tails are mounted only onto the outboard surfaces of the wing-tip fuselages, the centroid-of-lift of the high-lift flaps is located substantially at the center of gravity of the aircraft and the exhausts of the engines are emitted in the vertical plane of symmetry of the aircraft. Yawing moments occurring during flight with an engine inoperative are reduced; the horizontal tails carry an upload and contribute positive trim lift; large nose-down pitching moments generated by the high-lift flaps are minimized and noise levels are reduced.
Official Gazette of the U.S. Patent Office

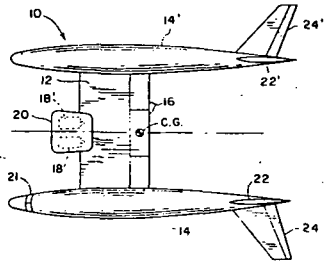

N75-25915* National Aeronautics and Space Administration. Ames Research Center, Moffett Field, Calif.
SHOULDER HARNESS AND LAP BELT RESTRAINT SYSTEM Patent
Albert P. Garavaglia and Dennis S. Matsuhiro, inventors (to NASA) Issued 3 Jun. 1975 4 p Filed 19 Mar. 1974 Supersedes N74-18805 (12 - 10, p 1137)
(NASA-Case-ARC-10519-2; US-Patent-3,887,233; US-Patent-Appl-SN-452767; US-Patent-Class-297-389; US-Patent-Class-280-150SB; US-Patent-Class-297-385; US-Patent-Class-297-388) Avail: US Patent Office CSCL 06Q

A shoulder harness and lap belt restraint system are provided where the lap belt is combined with the shoulder harness so that a single fastening secures both the shoulder strap and the lap belt. Official Gazette of the U.S. Patent Office

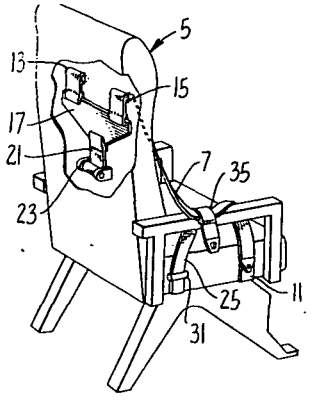

07 AIRCRAFT PROPULSION AND POWER

Includes prime propulsion systems and systems components, e.g., gas turbine engines and compressors; and on-board auxiliary power plants for aircraft. For related information see also *20 Spacecraft Propulsion and Power, 28 Propellants and Fuels,* and *44 Energy Production and Conversion.*

N75-24736* *National Aeronautics and Space Administration.* Ames Research Center, Moffett Field, Calif.

REVERSED COWL FLAP INLET THRUST AUGMENTOR Patent

Dah Yu Cheng, inventor (to NASA) (Santa Clara Univ.) Issued 13 May 1975 7 p Filed 19 Sep. 1973 Supersedes N73-32624 (11 - 23, p 2831) Sponsored by NASA (NASA-Case-ARC-10754-1; US-Patent-3,883,095; US-Patent-Appl-SN-398886; US-Patent-Class-244-53B; US-Patent-Class-137-15.1) Avail: US Patent Office CSCL 21E

An adjustable airfoil is described for varying the geometry of a jet inlet and an ejector inlet in a jet engine for providing thrust augmentation and noise reduction. The airfoil comprises essentially a plurality of segments which are extended radially outward and retracted relative to the longitudinal axis of the engine as a function of a change in the pressure differential between the upstream and downstream surfaces of the airfoil. A servo mechanism responsive to the change in the pressure differential is coupled to the airfoil to extend and retract the airfoil segments to maintain the pressure at a maximum on the downstream side of the airfoil relative to the pressure on the upstream side of the airfoil. At low speeds, such as at take-offs and landings, the airfoil is fully extended while at high speeds it is fully retracted. Official Gazette of the U.S. Patent Office

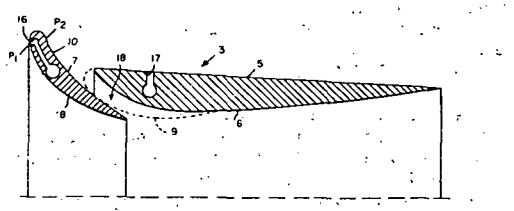

N75-31108*# National Aeronautics and Space Administration. Ames Research Center, Moffett Field, Calif.

JET ENGINE AIR INTAKE SYSTEM Patent Application

Norman E. Sorensen and Eldon A. Latham, inventors (to NASA) Filed 12 Sep. 1975 21 p (NASA-Case-ARC-10761-1; US-Patent-Appl-SN-612899) Avail: NTIS HC $3.25 CSCL 21E

An axisymmetric air intake system for a jet aircraft engine comprising a fixed cowl extending outwardly from the face of the engine, a centerbody coaxially disposed within the cowl, and means for axially displacing the centerbody within the cowl is described. The cowl and centerbody define a main airflow passageway. In one embodiment, a system for opening and closing the centerbody air inlet is provided by a dual-member centerbody, the forward member of which is displaced axially with respect to the aft member. In a second embodiment, the centerbody air inlet may be opened and closed by means of doors located in the forward wall of a unitary-member centerbody. The air intake system may also be provided with closeable air inlets located in the cowl wall which communicate with cowl auxiliary airflow passageways to provide auxiliary airflow to the engine. Closeable bypass openings are provided which allow control of the normal shock wave within the main airflow passageway. NASA

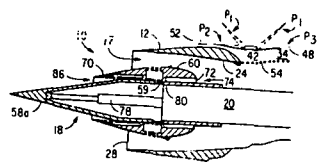

09 RESEARCH AND SUPPORT FACILITIES (AIR)

Includes airports, hangars and runways; aircraft repair and overhaul facilities; wind tunnels; shock tube facilities; and engine test blocks. For related information see also *14 Ground Support Systems and Facilities (Space).*

N75-24758* National Aeronautics and Space Administration. Goddard Space Flight Center, Greenbelt, Md.

LOW SPEED PHASELOCK SPEED CONTROL SYSTEM Patent

Robert W. Fulcher and John Sudey, inventors (to NASA) Issued 13 May 1975 10 p Filed 27 Sep. 1973 Supersedes N74-10202 (12 - 01, p 0026) (NASA-Case-GSC-11127-1; US-Patent-3,883,785; US-Patent-Appl-SN-401466; US-Patent-Class-318-314; US-Patent-Class-318-318; US-Patent-Class-318-341) Avail: US Patent Office CSCL 09A

A motor speed control system for an electronically commutated brushless dc motor is provided which includes a phaselock loop with bidirectional torque control for locking the frequency output of a high density encoder, responsive to actual speed conditions, to a reference frequency signal, corresponding to the desired speed. The system includes a phase comparator, which produces an output in accordance with the difference in phase between the reference and encoder frequency signals, and an integrator-digital-to-analog converter unit, which converts the comparator output into an analog error signal voltage. Compensation circuitry, including a biasing means, is provided to convert the analog error signal voltage to a bidirectional error signal

voltage which is utilized by an absolute value amplifier, rotational decoder, power amplifier-commutators, and an arrangement of commutation circuitry. Official Gazette of the U.S. Patent Office

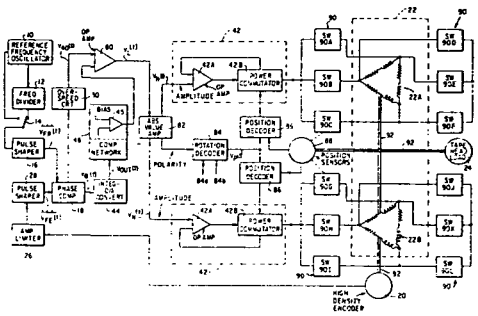

camera is to be blanked from the monitor in order to create the illusion that one or the other of the target and the object is closer to the observer. NASA

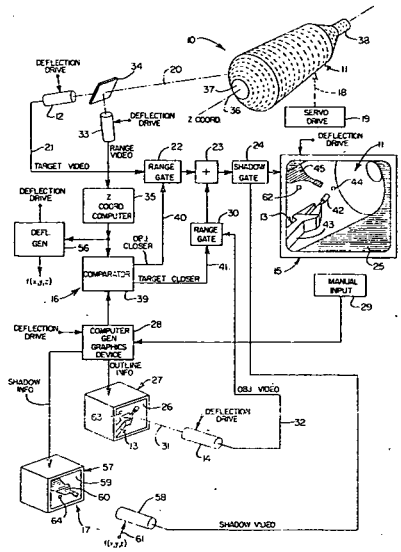

N75-25965*# National Aeronautics and Space Administration. Marshall Space Flight Center, Huntsville, Ala.

SIMULATOR FOR PRACTICING THE MATING OF AN OBSERVER-CONTROLLED OBJECT WITH A TARGET Patent Application

Walter J. Polstorff, inventor (to NASA) Filed 25 Jun. 1975 23 p

(NASA-Case-MFS-23052-1; US-Patent-Appl-SN-590183) Avail: NTIS HC $3.25 CSCL 14B

A description is given of a simulator by which an observer, viewing both a target and an object under his control, can practice mating the object with the target. The target replica is coded along one coordinate axis in such a way that the distance of an elemental area on the target along the axis is capable of being remotely readout by a television camera. The code is by way of a variation in color, in brightness or a combination of color or brightness. A third television camera responsive to the code provides information by which a target range signal is generated for each picture element of the scene televised by the target camera. The computer calculates an object range signal for each picture element of the scene televised by the object camera, and a comparator compares range signals for corresponding picture elements of both scenes in order to determine which

N75-25966*# National Aeronautics and Space Administration. Goddard Space Flight Center, Greenbelt, Md.

STATIC COEFFICIENT TEST METHOD AND APPARATUS Patent Application

Carl L. Haehner and John L. Tarpley, inventors (to NASA) Filed 9 Jun. 1975 18 p

(NASA-Case-GSC-11893-1; US-Patent-Appl-SN-585420) Avail: NTIS HC $3.25 CSCL 14B

A method and apparatus is described for determining the static coefficient of friction between contacting surfaces of a plurality of bodies. A flexible filament fixedly connected to one of the bodies is alternately and cyclically tensioned and relaxed in response to another of the bodies being moved at constant velocity relative to a fixed portion of the filament. Coefficients of friction for contacting surfaces under high compressive loads up to 600 psi are determined by utilizing a test fixture including a calibrated compression spring that exerts a normal force on the contacting surfaces. NASA

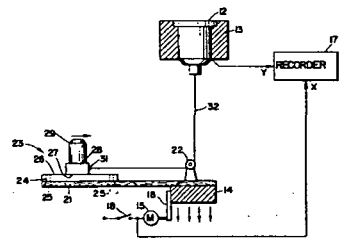

N75-32134*# National Aeronautics and Space Administration. Marshall Space Flight Center, Huntsville, Ala.
APPARATUS FOR REDUCING AERODYNAMIC NOISE IN A WIND TUNNEL Patent Application
Paul W. Howard and Luke A. Schutzenhofer, inventors (to NASA) Filed 26 Aug. 1975 14 p
(NASA-Case-MFS-23099-1; US-Patent-Appl-SN-607969) Avail: NTIS HC $3.25 CSCL 14B

An invention designed to reduce background noise created in the test section of a transonic wind tunnel during aerodynamic testing was described. The novelty of the invention appears to lie in the placing of finely woven mesh screen over perforations formed in the porous wall members of the wind tunnel test section. This virtually eliminates the background noise which has heretofore influenced the aerodynamic measurements taken in transonic wind tunnels. Author

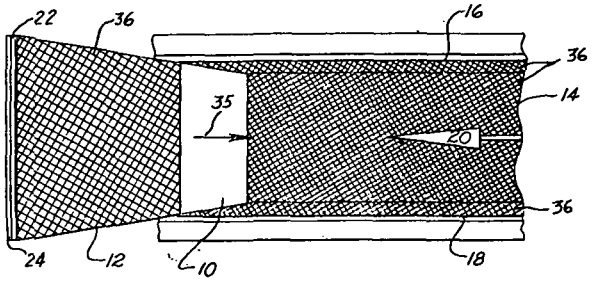

for each direction that establishes a standing wave pattern so that the object is automatically urged towards the intersections of the nodes, or locations of minimum pressure.
Official Gazette of the U.S. Patent Office

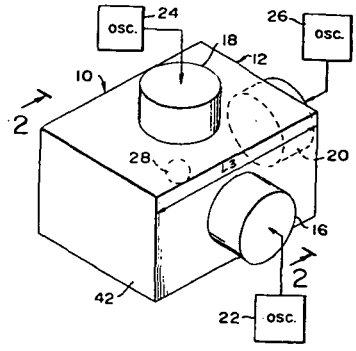

14 GROUND SUPPORT SYSTEMS AND FACILITIES (SPACE)

Includes launch complexes, research and production facilities; ground support equipment, e.g., mobile transporters; and simulators. For related information see also *09 Research and Support Facilities (Air).*

12 ASTRONAUTICS (GENERAL)

For extraterrestrial exploration see *91 Lunar and Planetary Exploration.*

N75-24774* National Aeronautics and Space Administration. Pasadena Office, Calif.
MATERIAL SUSPENSION WITHIN AN ACOUSTICALLY EXCITED RESONANT CHAMBER Patent
Taylor G. Wang (JPL), Melvin M. Saffren (JPL), and Daniel D. Elleman, inventors (to NASA) (JPL) Issued 13 May 1975 10 p Filed 31 Aug. 1973 Supersedes N73-31443 (11 - 22, p 2677) Sponsored by NASA
(NASA-Case-NPO-13263-1; US-Patent-3,882,732; US-Patent-Appl-SN-393523; US-Patent-Class-73-505) Avail: US Patent Office CSCL 22A

A method is described for positioning an object within a chamber, which is especially useful in performing manufacturing operations under zero gravity conditions. Sound waves are applied within the chamber in different directions and at a frequency

N75-22356*# National Aeronautics and Space Administration. Marshall Space Flight Center, Huntsville, Ala.
A DEVICE FOR INSTALLING ROCKET ENGINES Patent Application
Thomas R. George, Jr., inventor (to NASA) (Rocketdyne, Canoga Park, Calif.) Filed 25 Apr. 1975 16 p Sponsored by NASA (NASA-Case-MFS-19220-1; US-Patent-Appl-SN-571821) Avail: NTIS HC $3.25 CSCL 13I

A device for installing rocket engines at a severe cant relative to vertical, while maintaining uniform loading at the thrust chamber exit is proposed. The device is characterized by an axially extensible, tiltable pedestal, a lifting platform for supporting a rocket engine at its thrust chamber exit, a mount with a concentric base characterized by a concave bearing surface, a plurality of uniformly spaced legs extended radially from the base, and an annular receiver coaxially aligned with the base and affixed to the distal ends of the legs for receiving the thrust chamber exit. The lifting platform is concentrically related to the pedestal and is coupled to the extended end portion through a convex bearing surface for accommodating a rocking motion of the platform about an axis angularly related to the longitudinal axis of the

pedestal. Mated curved bearing surfaces are employed for coupling a tiltable lifting platform with a pedestal and adapted to support rocket engines at the thrust chamber exits. NASA

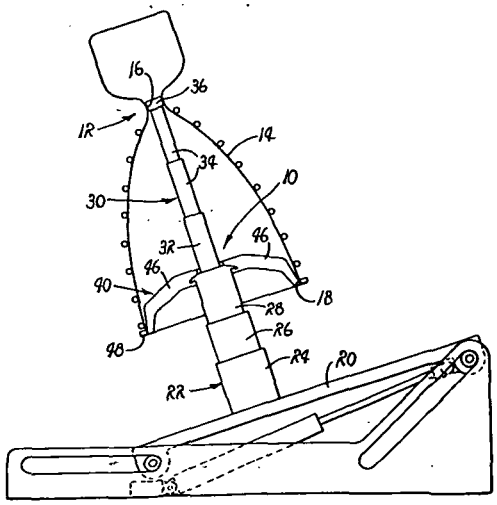

N75-24794* National Aeronautics and Space Administration. Marshall Space Flight Center, Huntsville, Ala.
DEVICE FOR USE IN LOADING TENSION MEMBERS Patent
Walter T. Appleberry, inventor (to NASA) (McDonnell-Douglas Corp., Huntington Beach, Calif.) Issued 13 May 1975 5 p Filed 10 May 1973 Supersedes N73-23526 (11 - 14, p 1667) Sponsored by NASA
(NASA-Case-MFS-21488-1; US-Patent-3,882,719; US-Patent-Appl-SN-359156; US-Patent-Class-73-143) Avail: US Patent Office CSCL 14B

The indicator is characterized by an elongated elastic body having extended from the opposite ends of threaded shanks adapted to selected tension members. A pair of external shoulders, one of which is axially displaceable relative to the other, and a rigid tubular sleeve interposed between said shoulders are included. Tension is applied to the elastic body for imparting strain. The movable shoulder can be advanced into abutting engagement with the sleeve, whereby the sleeve is placed in compression once the tensile forces are removed from the shanks. A reapplication of tensile forces equal to the initially applied tensile forces removes the sleeve from compression, whereby the sleeve is freed for rotation for thus indicating the magnitude of the applied tensile forces.
Official Gazette of the U.S. Patent Office

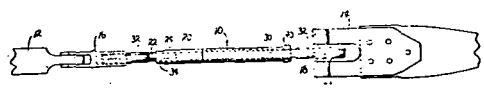

17 SPACECRAFT COMMUNICATIONS, COMMAND AND TRACKING

Includes telemetry; space communications networks; astronavigation; and radio blackout. For related information see also *04 Aircraft Communications and Navigation* and *32 Communications.*

N75-22365*# National Aeronautics and Space Administration. Goddard Space Flight Center, Greenbelt, Md.
TELEMETRY SYNCHRONIZER Patent Application
Carroll T. Pardoe, inventor (to NASA) (APL) Filed 4 Apr. 1975 39 p Sponsored by NASA
(NASA-Case-GSC-11868-1; US-Patent-Appl-SN-565290) Avail: NTIS HC $3.75 CSCL 17B

A telemetry data synchronizer for achieving phase lock and synchronization of an input signal having a pseudorandom sequence is presented. The apparatus is characterized by a delay lock loop adapted to be responsive to an L format biphase signal having a pseudorandom sequence and utilizing only digital circuitry. NASA

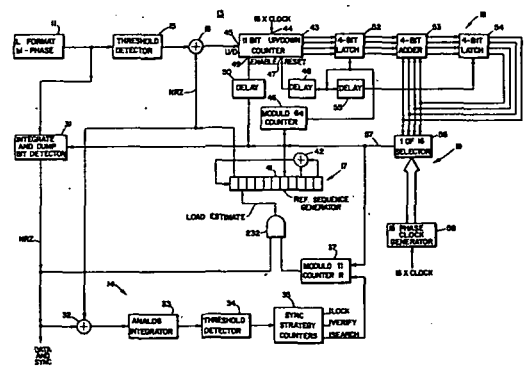

18 SPACECRAFT DESIGN, TESTING AND PERFORMANCE

Includes spacecraft thermal and environmental control; and attitude control. For life support systems see *54 Man/System Technology and Life Support.* For related information see also *05 Aircraft Design, Testing and Performance* and *39 Structural Mechanics.*

N75-27040* National Aeronautics and Space Administration, Washington, D.C.
FOLDING STRUCTURE FABRICATED OF RIGID PANELS Patent
William R. Hilker (Northrop Corp., Hawthorne, Calif.) and Robert S. Fujioka, inventors (to NASA) (Northrop Corp., Hawthorne, Calif.) Issued 21 Sep. 1965 9 p Filed 24 Jun. 1963 Sponsored by NASA
(NASA-Case-XHQ-02146; US-Patent-3,206,897; US-Patent-Appl-SN-290043; US-Patent-Class-52-71) Avail: US Patent Office CSCL 22B

An expandable structure comprised of a plurality of rigid panels constructed in a manner enabling the structure to be mechanically actuated between unexpanded and expanded states is described. The structure is adapted for use in space exploration

and is designed to provide a rigid protective enclosure for personnel and/or supplies in space.

Official Gazette of the U.S. Patent Office

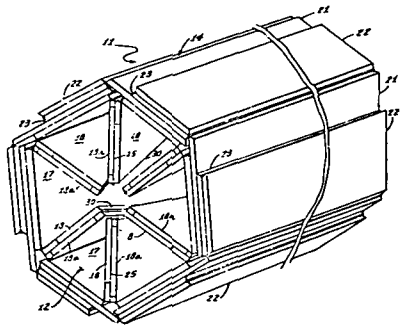

N75-27041* National Aeronautics and Space Administration. Lyndon B. Johnson Space Center, Houston, Tex.

VARIABLE RATIO MIXED-MODE BILATERAL MASTER-SLAVE CONTROL SYSTEM FOR SHUTTLE REMOTE MANIPULATOR SYSTEM Patent

Fredrick J. Greeb (Martin Marietta Corp., Denver), Shepard B. Brodie (Martin Marietta Corp., Denver), and Carl R. Flatau, inventors (to NASA) (Martin Marietta Corp., Denver) Issued 8 Jul. 1975 13 p Filed 20 Aug. 1973 Supersedes N73-30832 (11 - 21, p 2599) Sponsored by NASA

(NASA-Case-MSC-14245-1; US-Patent-3,893,573; US-Patent-Appl-SN-389916; US-Patent-Class-214-1CM) Avail: US Patent Office CSCL 22B

A control system for a remotely operated manipulator system which incorporates a slave arm of substantial length and strength having multiple degrees of freedom at an adequate number of joints to enable the arm to accomplish specified tasks, and a master arm for use by an operator was disclosed. The two are operated by a servo system which provides a variable ratio which is varied dependent on the task required for the slave arm. Gross movements of the slave arm are readily accomplished with small movements of the master. When the manipulator arm is close to the target, the ratio is preferably changed providing better master-arm response to the operator to enable grasping with the manipulator terminal device.

Official Gazette of the U.S. Patent Office

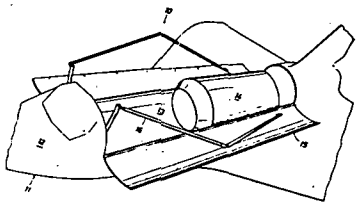

N75-29160*# National Aeronautics and Space Administration. Marshall Space Flight Center, Huntsville, Ala.

COMBINED DOCKING AND GRASPING DEVICE Patent Application

John L. Burch and James D. Johnston, inventors (to NASA) Filed 7 Aug. 1975 14 p

(NASA-Case-MFS-23088-1; US-Patent-Appl-SN-602617) Avail: NTIS HC $3.25 CSCL 22B

A combined docking and grasping manipulator arm device is described. The device is comprised of a single manipulator arm for both docking and for performing general work between orbital vehicles and orbital payloads. NASA

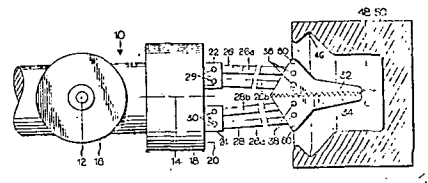

19 SPACECRAFT INSTRUMENTATION

For related information see also *06 Aircraft Instrumentation* and *35 Instrumentation and Photography*.

N75-33169*# National Aeronautics and Space Administration. Pasadena Office, Calif.

SUN DIRECTION DETECTION SYSTEM Patent Application

Louis F. Schmidt (JPL) and George D. Pace, Jr., inventors (to NASA) (JPL) Filed 24 Sep. 1975 24 p

(Contract NAS7-100)

(NASA-Case-NPO-13722-1; US-Patent-Appl-SN-616472) Avail: NTIS HC $3.25 CSCL 17G

A sun sensor detection system is described which includes an illumination detector and a sun angle detector. The illumination detector provides a low resistance output whenever the sun is within a selected field of view and a high resistance output whenever the sun is outside the field of view. The sun angle detector provides an output voltage related to the direction of the sun with respect to the normal direction. The output of the sun angle detector is fed to the attitude control circuitry to control the vehicle attitude with respect to the sun as a function of the output of the sun angle detector. NASA

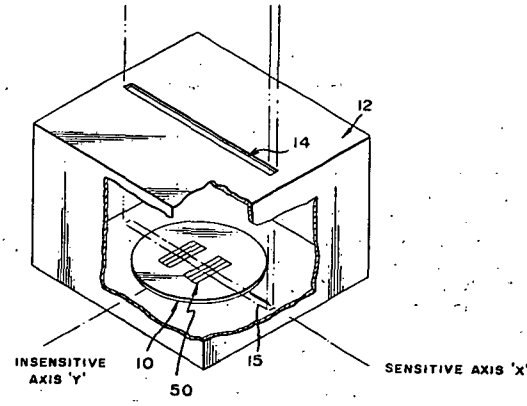

20 SPACECRAFT PROPULSION AND POWER

Includes main propulsion systems and components, e.g., rocket engines; and spacecraft auxiliary power sources. For related information see also *07 Aircraft Propulsion and Power, 28 Propellants and Fuels,* and *44 Energy Production and Conversion.*

N75-24837* National Aeronautics and Space Administration. Pasadena Office, Calif.
HEAT OPERATED CRYOGENIC ELECTRICAL GENERATOR Patent
Taylor G. Wang (JPL), Melvin M. Saffren (JPL), and Daniel D. Elleman, inventors (to NASA) (JPL) Issued 1 Apr. 1975 8 p Filed 1 Apr. 1974 Supersedes N74-19701 (12 - 11, p 1250) Sponsored by NASA
(NASA-Case-NPO-13303-1; US-Patent-3,875,435; US-Patent-Appl-SN-457295; US-Patent-Class-310-40; US-Patent-Class-310-52; US-Patent-Class-310-10; US-Patent-Class-310-4; US-Patent-Class-60-530; US-Patent-Class-60-516; US-Patent-Class-62-3; US-Patent-Class-62-467; US-Patent-Class-335-216) Avail: US Patent Office CSCL 10B

An electrical generator useful for providing electrical power in deep space, is disclosed. The electrical generator utilizes the unusual hydrodynamic property exhibited by liquid helium as it is converted to and from a superfluid state to cause opposite directions of rotary motion for a rotor cell thereof. The physical motion of the rotor cell was employed to move a magnetic field provided by a charged superconductive coil mounted on the exterior of the cell. An electrical conductor was placed in surrounding proximity to the cell to interact with the moving magnetic field provided by the superconductive coil and thereby generate electrical energy. A heat control arrangement was provided for the purpose of causing the liquid helium to be partially converted to and from a superfluid state by being cooled and heated, respectively.

Official Gazette of the U.S. Patent Office

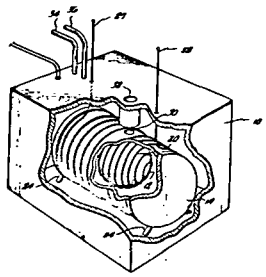

N75-32166*# National Aeronautics and Space Administration. Lewis Research Center, Cleveland, Ohio.
ION BEAM THRUSTER SHIELD Patent Application
J. L. Power, inventor (to NASA) Filed 12 Sep. 1975 25 p (NASA-Case-LEW-12082-1; US-Patent-Appl-SN-612964) Avail: NTIS HC $3.25 CSCL 21C

An ion thruster beam shield comprised of a cylindrical housing and a number of annular vanes which are spaced along the length of the housing is described. The shield intercepts and stops all charge exchange and beam ions, neutral propellant, and sputter products formed due to the interaction of beam and shield from emanating outside the ion thruster. The shield further prevents the sputter products formed during the operation of the engine from escaping the interior volume of the shield.

NASA

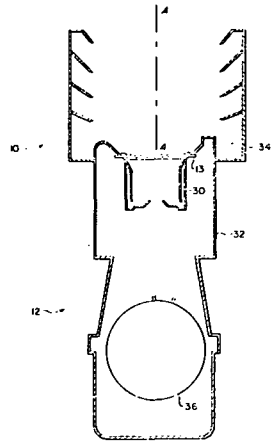

23 CHEMISTRY AND MATERIALS (GENERAL)

Includes biochemistry and organic chemistry.

N75-29181*# National Aeronautics and Space Administration. Langley Research Center, Langley Station, Va.
[A METHOD OF PREPARING AROMATIC POLYIMIDES HAVING UNIQUELY LOW SOFTENING TEMPERATURES] Patent Application
Vernon L. Bell, inventor (to NASA) Filed 28 Mar. 1975 10 p (NASA-Case-LAR-11828-1; US-Patent-Appl-SN-562992) Avail: NTIS HC $3.25 CSCL 07A

A method is described of preparing insoluble thermoplastic aromatic polyimides having uniquely low softening or glass transition temperatures by reacting, in a suitable solvent, an aromatic dianhydride, and a meta-substituted aromatic diamine.

NASA

N75-30256* National Aeronautics and Space Administration. Marshall Space Flight Center, Huntsville, Ala.
PERFLUORO ALKYLENE DIOXY-BIS-(4-PHTHALIC ANHYDRIDES AND OXY-BIS-(PERFLIOROALKYLENOEXY-PHATHALIC ANHYDRIDES Patent
James A. Webster, inventor (to NASA) (Monsanto Res. Corp., Dayton, Ohio) Issued 12 Aug. 1975 7 p Filed 16 Jul. 1974 Supersedes N74-29479 (12 - 19, p 2246) Sponsored by NASA
(NASA-Case-MFS-22356-1; US-Patent-3,899,517; US-Patent-Appl-SN-489008; US-Patent-Class-260-346.3; US-Patent-Class-260-78TF; US-Patent-Class-260-520) Avail: US Patent Office CSCL 07C

Dianhydrides were found which when reacted with diamines provide polyimides exhibiting excellent thermal, oxidative, and hydrolytic stability and good tensile strength and elongation. There characteristics make the polyimides useful as sealants in advanced aerospace structures. Official Gazette of the U.S. Patent Office

24 COMPOSITE MATERIALS

Includes laminates.

N75-28135* National Aeronautics and Space Administration. Marshall Space Flight Center, Huntsville, Ala.
METHOD OF PREPARING GRAPHITE REINFORCED ALUMINUM COMPOSITE Patent
Felix P. Laiacona, inventor (to NASA) Issued 15 Jul. 1975 5 p Filed 24 Mar. 1971
(NASA-Case-MFS-21077-1; US-Patent-3,894,677; US-Patent-Appl-SN-127481; US-Patent-Class-228-190; US-Patent-Class-29-419; US-Patent-Class-228-193) Avail: US Patent Office CSCL 11D

A metallic composite made up of an aluminum matrix and high-modulus graphite fibers coated with nickel is presented. The composite was prepared by applying a nickel coating to graphite fiber yarn, alining the yarn between aluminum sheets in a stacked array and heating the array under pressure to obtain diffusion bonding. Official Gazette of the U.S. Patent Office

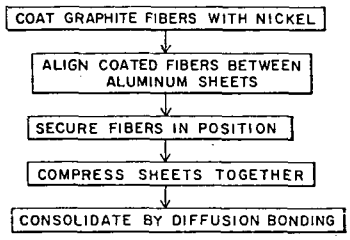

N75-30260* National Aeronautics and Space Administration. Langley Research Center, Langley Station, Va.
BONDING METHOD IN THE MANUFACTURE OF CONTINUOUS REGRESSION RATE SENSOR DEVICES Patent
William H. Haraway, Jr., Walter J. Dale, and Edwin A. McErlean, inventors (to NASA) Issued 12 Aug. 1975 8 p Filed 12 Dec. 1973 Supersedes N74-14141 (12 - 05, p 0540)
(NASA-Case-LAR-10337-1; US-Patent-3,898,730; US-Patent-Appl-SN-424038; US-Patent-Class-29-613; US-Patent-Class-29-610; US-Patent-Class-338-13; US-Patent-Class-338-283) Avail: US Patent Office CSCL 11D

In a method for manufacturing continuous regression rate sensor devices, at least two retaining members are derived from a phenolic-graphite or a 50:50. Phenolic-nylon material are interbonded one to another to form a cavity where an ablation regression grid sensor is positioned.
Official Gazette of the U.S. Patent Office

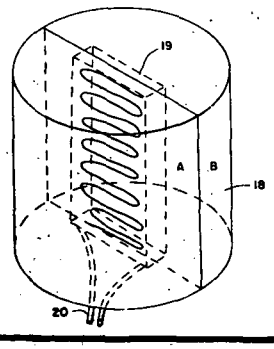

N75-32180*# National Aeronautics and Space Administration. *Lewis Research Center, Cleveland, Ohio.*
HYBRID COMPOSITE LAMINATE STRUCTURES Patent Application
C. C. Chamis and R. F. Lark, inventors (to NASA) Filed 24 Sep. 1975 31 p
(NASA-Case-LEW-12118-1; US-Patent-Appl-SN-616332) Avail: NTIS HC $3.75 CSCL 11D

The invention is related to laminate structures and specifically to essentially anisotropic fiber composite laminates. Metal foils are selectively disposed within the laminate to produce increased resistance to high velocity impact, fracture, surface erosion, and other stresses. NASA

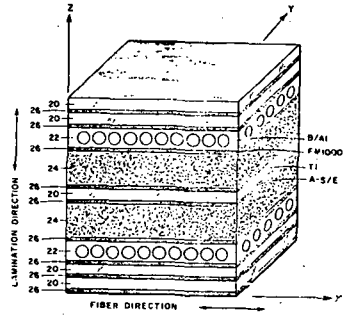

N75-33181* National Aeronautics and Space Administration. Lewis Research Center, Cleveland, Ohio.
METHOD OF MAKING AN INSULATION FOIL Patent
Edward A. Maslowski, inventor (to NASA) Issued 23 Sep. 1975 10 p Filed 2 May 1973 Supersedes N73-22415 (11 - 13, p 1532)
(NASA-Case-LEW-11484-1; US-Patent-3,906,769; US-Patent-Appl-SN-356554; US-Patent-Class-72-46; US-Patent-Class-117-38; US-Patent-Class-117-46FS; US-Patent-Class-117-105.2; US-Patent-Class-117-8.5; US-Patent-Class-29-527.2; US-Patent-Class-29-DIG.24; US-Patent-Class-29-DIG.39) Avail: US Patent Office CSCL 11D

An insulating foil particularly adapted for use in a multilayer insulation system is disclosed together with a method of making such insulation. A molten ceramic material such as a refractory oxide is deposited on a plurality of spots on a metal foil to produce protuberances having a ceramic coating. This may be accomplished by plasma spraying the material through an apertured mask placed against the foil. The foil may be in the form of a continuous strip which is advanced to a new position after each flame spraying operation. A cooled backing plate may be disposed against the foil to control the temperature thereof. Hydraulic actuating means may be utilized to actuate the apertured mask to clamp the foil between the mask and the backing plate prior to each flame spraying operation.
Official Gazette of the U.S. Patent Office

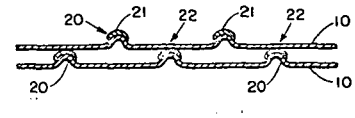

25 INORGANIC AND PHYSICAL CHEMISTRY

Includes chemical analysis, e.g., chromatography; combustion theory; electrochemistry; and photochemistry. For related information see also *77 Thermodynamics and Statistical Physics.*

N75-26043* National Aeronautics and Space Administration. Langley Research Center, Langley Station, Va.

VAPOR PHASE GROWTH OF GROUPS 3-5 COMPOUNDS BY HYDROGEN CHLORIDE TRANSPORT OF THE ELEMENTS Patent

Ramesh C. Tyagi (NAS-NRC), William J. Debnam, Jr., Maxwell F. McNear, Roger K. Crouch, and Roger A. Breckenridge, inventors (to NASA) Issued 10 Jun. 1975 6 p Filed 19 Dec. 1973 Supersedes N74-27261 (12-16, p 1958)
(NASA-Case-LAR-11144-1; US-Patent-3,888,705; US-Patent-Appl-SN-426405; US-Patent-Class-148-175; US-Patent-Class-117-106A; US-Patent-Class-117-107.2; US-Patent-Class-117-201; US-Patent-Class-118-48; US-Patent-Class-118-49.1; US-Patent-Class-252-62.3GA) Avail: US Patent Office CSCL 07D

A method of forming binary, ternary, and quaternary compounds derived from elements of groups III and V by a hydrogen chloride-hydrogen carrier gas is reported. The gas is separately contacted with the desired elements at elevated temperatures to provide the corresponding subchlorides, which are then transported to a reaction zone for final deposition of the respective elements on a single crystal substrate derived from one or more elements of groups III or V. The rate of flow of the carrier gas over each element is adjusted such that the elements are deposited on the substrate in sufficient amounts to provide the desired binary, ternary, or quaternary compound.

Official Gazette of the U.S. Patent Office

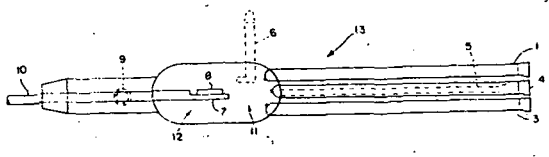

N75-29192* National Aeronautics and Space Administration, Washington, D.C.

VAPOR DEPOSITION APPARATUS Patent

William S. Nicol, inventor (to NASA) (MIT) Issued 7 Sep. 1971 5 p Filed 5 Nov. 1968 Sponsored by NASA
(NASA-Case-HQN-10462; US-Patent-3,603,285; US-Patent-Appl-SN-773530; US-Patent-Class-118-43) Avail: US Patent Office CSCL 07D

Vapor deposition apparatus is described which includes at least two crucibles adapted to contain evaporant materials of different volatilities and which are disposed to each form a vapor stream of uniform density and incident upon a common substrate. A chimney member having an exit disposed in the immediate vicinity of the substrate but outside of the vapor stream of the less volatile material is attached to the crucible containing the material of greater volatility.

Official Gazette of the U.S. Patent Office

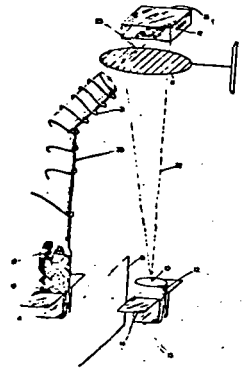

26 METALLIC MATERIALS

Includes physical, chemical, and mechanical properties of metals, e.g., corrosion; and metallurgy.

N75-26087*# National Aeronautics and Space Administration. Lewis Research Center, Cleveland, Ohio.

A ZIRCONIUM MODIFIED NICKEL-COPPER ALLOY Patent Application

John D. Whittenberger, inventor (to NASA) Filed 5 Jun. 1975 12 p
(NASA-Case-LEW-12245-1; US-Patent-Appl-SN-584094) Avail: NTIS HC $3.25 CSCL 11F

An improved material for use in a catalytic reactor is reported. The material reduces nitrogen oxide from internal combustion engines and is in the form of a zirconium modified, precipitation strengthened nickel-copper alloy. This material has a nominal composition of Ni-30 Cu-0.2 Zr and is characterized by improved high temperature mechanical properties. NASA

N75-27125* National Aeronautics and Space Administration. Marshall Space Flight Center, Huntsville, Ala.

BRAZING ALLOY BINDER Patent

Edward R. Roeder, inventor (to NASA) (Rockwell Intern. Corp., Canoga Park, Calif.) Issued 28 Oct. 1969 3 p Filed 8 Dec. 1965 Sponsored by NASA
(NASA-Case-XMF-05868; US-Patent-3,475,442; US-Patent-Appl-SN-512509; US-Patent-Class-260-29.6) Avail: US Patent Office CSCL 11F

A binder for brazing alloy compositions in powder form was designed to form an extrudable paste that can be easily used in extruding, that has a long shelf life, and that provides good brazing paste qualities. The binder is composed of polybutene, ethylene glycol, water, and acrylic solution. In addition to possessing good slump resistance at room temperature, the binder provides adhesion to metallic surface, alloy retention during the brazing cycle, and, when mixed with the alloy to form a paste, is permanently plastic. The binder is not reactive with the brazing alloys and most commonly used base metal materials.

Official Gazette of the U.S. Patent Office

N75-27126* National Aeronautics and Space Administration. Marshall Space Flight Center, Huntsville, Ala.

BRAZING ALLOY COMPOSITION Patent

Edward R. Roeder (Rockwell Intern. Corp., Canoga Park, Calif.) and Ernst G. Huschke, Jr., inventors (to NASA) (Rockwell Intern. Corp., Canoga Park, Calif.) Issued 19 Nov. 1968 3 p Filed 13 Apr. 1966 Sponsored by NASA

(NASA-Case-XMF-06053; US-Patent-3,411,900; US-Patent-Appl-Sn-542192; US-Patent-Class-75-173) Avail: US Patent Office CSCL 11F

A silver-base brazing alloy containing palladium, copper, and nickel was developed to provide the following: good wetting capability of the base metal surfaces; no intergranular penetration or erosion of base metals; no stress cracking tendencies; joints with good resistance to crevice corrosion; and, good thermal conductivity. The brazing alloy is comprised of from 80 to 95 weight percent silver, from 1 to 10 weight percent copper, and from .5 to 3.5 weight percent nickel with trace amounts of impurities. The alloy may be prepared by commercial melting practices. Both wire and powder or prepared heats were used for evaluation of the material.

Official Gazette of the U.S. Patent Office

N75-27127* National Aeronautics and Space Administration. Pasadena Office, Calif.

BRAZING ALLOY Patent

Edward R. Roeder (Rockwell Intern. Corp., Canoga Park, Calif.) and Ernst G. Huschke, Jr., inventors (to NASA) (Rockwell Intern. Corp., Canoga Park, Calif.) Issued 12 Mar. 1968 2 p Filed 20 Sep. 1965 Sponsored by NASA

(NASA-Case-XNP-03878; US-Patent-3,373,016; US-Patent-Appl-SN-488745; US-Patent-Class-75-173) Avail: US Patent Office CSCL 11F

A brazing alloy was designed for use in manual applications (i.e. hand-held, manually operated torches). The brazing alloy contains zinc, copper, nickel, and silver, and provides both stress cracking resistance and corrosion resistance when applied to stainless steel base metal. The alloy may be prepared by conventional melt techniques.

Official Gazette of the U.S. Patent Office

N75-29236* National Aeronautics and Space Administration. Pasadena Office, Calif.

METHOD OF HEAT TREATING AGE-HARDENABLE ALLOYS Patent

Chester S. Shira, inventor (to NASA) (Rocketdyne, Canoga Park, Calif.) Issued 25 Jun. 1968 5 p Filed 4 Feb. 1965 Sponsored by NASA

(NASA-Case-XNP-01311; US-Patent-3,390,023; US-Patent-Appl-SN-430496; US-Patent-Class-148-127) Avail: US Patent Office CSCL 11F

A method of heat treating age-hardenable nickel-chromium base alloys is presented. The temperature and rate of cooling of the alloys is controlled after being solution heated to produce annealed alloy bodies with a yield strength of 90,000 psi.

Official Gazette of the U.S. Patent Office

27 NONMETALLIC MATERIALS

Includes physical, chemical, and mechanical properties of plastics, elastomers, lubricants, polymers, textiles, adhesives, and ceramic materials.

N75-24938*# National Aeronautics and Space Administration. Ames Research Center, Moffett Field, Calif.

PROCESS FOR PREPARING LOW DENSITY POLYBENZIMIDAZOLE FOAMS Patent Application

Demetrius A. Kourtides, John A. Parker, and Chadwick B. Delano, inventors (to NASA) (Whittaker Corp.) Filed 29 Apr. 1975 20 p

(NASA-Case-ARC-10823-1; US-Patent-Appl-SN-572784) Avail: NTIS HC $3.25 CSCL 11D

Low density polybenzimidazole foams are prepared by controlled thermal crosslinking of the polybenzimidazole prepolymers. The heating rate during the temperature range at which foaming occurs is regulated at 2 K per minute. The polymer is then heated to a maximum cure temperature of from about 740 K to 800 K in order to obtain optimal thermophysical properties. Polybenzimidazole foams prepared in this manner have reproducible densities of 24 Kg/cu m to 60 Kg/cu m. NASA

N75-26136*# National Aeronautics and Space Administration. Ames Research Center, Moffett Field, Calif.

PREPARATION OF DIELECTRIC COATINGS OF VARIABLE DIELECTRIC CONSTANT BY PLASMA POLYMERIZATION Patent Application

Martin Hudis (Allis-Chalmers Mfg. Co., Milwaukee) and Theodore Wydeven, inventors (to NASA) Filed 23 Jun. 1975 19 p

(NASA-Case-ARC-10892-1; US-Patent-Appl-SN-589172) Avail: NTIS HC $3.25 CSCL 07D

A plasma polymerization process for the deposition of a dielectric polymer coating on a substrate is disclosed. The process consists of disposing the substrate in a closed reactor between two temperature controlled electrodes connected to a power supply. A vacuum is maintained within the closed reactor, causing a monomer gas or a gas mixture of a monomer and a diluent to flow into the reactor. A plasma is generated between the electrodes. The dielectric constant of the polymer coating deposited by regulating the gas total and partial pressures, is controlled along with the electric strength and frequency, and the cu current density. A monomer, such as a polar saturated or unsaturated nitrogen-containing compound, or a monomer and diluent, such as a saturated or unsaturated aliphatic hydrocarbon and nitrogen, can by polymerized to form a dielectric coating having a varying dielectric constant in accordance with this plasma polymerization process. NASA

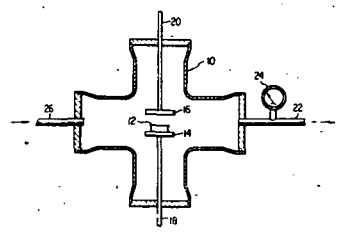

N75-27160* National Aeronautics and Space Administration. Marshall Space Flight Center, Huntsville, Ala.
REFRACTORY PORCELAIN ENAMEL PASSIVE CONTROL COATING FOR HIGH TEMPERATURE ALLOYS Patent
Herman Levin (Hughes Aircraft Co., Culver City, Calif.), Byron H. Auker (Hughes Aircraft Co., Culver City, Calif), and Michael N. Gardos, inventors (to NASA) (Hughes Aircraft Co., Culver City, Calif.) Issued 24 Jun. 1975 5 p Filed 11 Apr. 1973 Supersedes N73-21471 (11 - 12, p 1416) Sponsored by NASA
(NASA-Case-MFS-22324-1; US-Patent-3,891,452; US-Patent-Appl-SN-350250; US-Patent-Class-106-48; US-Patent-Class-106-54; US-Patent-Class-117-129) Avail: US Patent Office CSCL 11C

Porcelain enamel for use as a thermal control coating on high-temperature, nonferrous superalloy, substrates is described. It is made up of a high-refractory-content boroaluminum silicate glass frit containing zirconium oxide, lithium fluoride, alkali metal and alkaline earth oxide-flux, zinc oxide, and a submicron disperse phase of cubic-stabilized zirconium oxide. The coatings exhibit favorable optical properties and a high coefficient of thermal expansion, providing compatibility with substrates of nonferrous superalloys and enabling coated parts of such alloys to withstand severe thermal cycling conditions without cracking.
Official Gazette of the U.S. Patent Office

N75-29263*# National Aeronautics and Space Administration. Langley Research Center, Langley Station, Va.
POLYIMIDE ADHESIVES Patent Application
Donald J. Progar, Vernon L. Bell, and Terry L. SaintClair, inventors (to NASA) Filed 16 Dec. 1974 13 p
(NASA-Case-LAR-11397-1; US-Patent-Appl-SN-532784) Avail: NTIS HC $3.25 CSCL 11A

A process of preparing aromatic polyamide-acids for use as adhesives is described. An equimolar quantity of an aromatic dianhydride is added to a stirred solution of an aromatic diamine in a water or alcohol-miscible ether solvent to obtain a viscous polymer solution. The polymeric-acid intermediate polymer does not become insoluble but directly forms a smooth viscous polymer solution. These polyamic-acid polymers are converted, by heating in the range of 200-300 C and with pressure, to form polyimides with excellent adhesive properties. NASA

the superfluid helium film is evacuated through a valve and vented. A single dewar may be connected to several heat exchangers to separately cool several devices to different temperatures. NASA

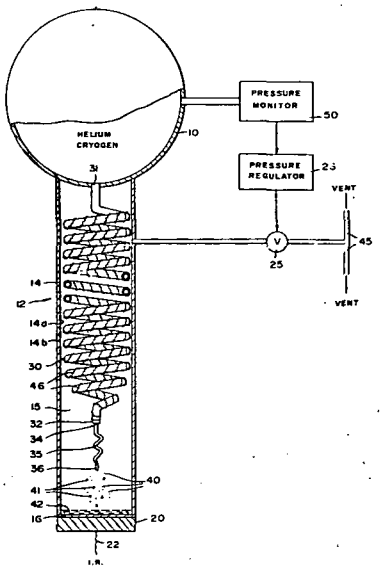

31 ENGINEERING (GENERAL)

Includes vacuum technology; control engineering; display engineering; and cryogenics.

N75-29277*# National Aeronautics and Space Administration. Pasadena Office, Calif.
CRYOSTAT SYSTEM FOR TEMPERATURES ON THE ORDER OF 2 DEG K OR LESS Patent Application
Charles G. Miller (JPL) and James B. Stephens, inventors (to NASA) (JPL) Filed 24 Jul. 1975 23 p
(Contract NAS7-100)
(NASA-Case-NPO-13459-1; US-Patent-Appl-SN-598967) Avail: NTIS HC $3.25 CSCL 20L

A cryostat system is described for cooling a device to temperatures of 2.18 K and less, without storing helium in the superfluid state. The system is comprised of a dewar in which helium is stored, and a coiled counterflow heat exchanger used to provide a path for helium to flow from the dewar into a cavity through a restrictor tube. The pressure in the cavity is regulated by a valve so that the helium is in the form of an aerosol mixture of helium gas and superfluid helium droplets. The superfluid helium droplets form a film which is used to cool a device, such as an LR detector. The gas formed from

N75-32262*# National Aeronautics and Space Administration. Lyndon B. Johnson Space Center, Houston, Tex.
LOW GRAVITY PHASE SEPARATOR Patent Application
George F. Smoot (Calif. Univ., Berkeley), William L. Pope (Calif. Univ., Berkeley), and Lawrence Smith, inventors (to NASA) (Calif. Univ., Berkeley) Filed 12 Sep. 1975 18 p Sponsored by NASA
(NASA-Case-MSC-14773-1; US-Patent-Appl-SN-612966) Avail: NTIS HC $3.25 CSCL 20L

An apparatus for phase separating gas-liquid mixtures, particularly the gas and liquid phases of cryogens used for maintaining superconducting magnets, is described. The apparatus utilizes the property of helium diamagnetism, along with the strong magnetic fields existing around superconducting magnets, to prevent venting of the liquid phase of helium in a low gravity environment. The apparatus comprises a cryostat which includes an inner vessel for containing the cryogen, surrounding vapor-cooled shields and an outer vacuum shell. In addition, there is a structure for venting the cryogen (primarily the gaseous phase) from the cryostat and a superconducting magnetic coil mounted in the cryostat. The magnetic coil serves as a magnetic

field source for orbiting experiments and repels the liquid phase of the cryogen from the vent outlet to reduce venting of the liquid phase of the cryogen. Diamagnetic cryogenic liquids other than helium may also be used. NASA

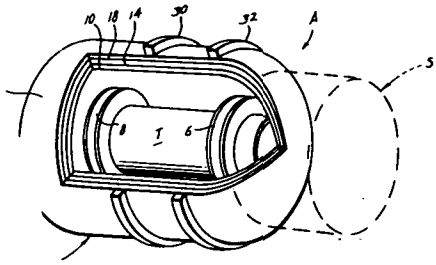

32 COMMUNICATIONS

Includes land and global communications; communications theory; and optical communications. For related information see also *04 Aircraft Communications and Navigation* and *17 Spacecraft Communications, Command and Tracking.*

N75-21485* National Aeronautics and Space Administration. Lyndon B. Johnson Space Center, Houston, Tex.
TELEVISION NOISE REDUCTION DEVICE Patent
Bernard L. Gordon (Taft Broadcasting Corp., Houston, Tex.) and James C. Stamps, inventors (to NASA) (Taft Broadcasting Corp., Houston, Tex.) Issued 1 Apr. 1975 6 p Filed 17 Oct. 1973 Sponsored by NASA
(NASA-Case-MSC-12607-1; US-Patent-3,875,584; US-Patent-Appl-SN-407323; US-Patent-Class-358-36; US-Patent-Class-178-DIG.12) Avail: US Patent Office CSCL 17B

A noise reduction system that divides the color video signal into its luminance and chrominance components is reported. The luminance component of a given frame is summed with the luminance component of at least one preceding frame which was stored on a disc recorder. The summation is carried out so as to achieve a signal amplitude equivalent to that of the original signal. The averaged luminance signal is then recombined with the chrominance signal to achieve a noise-reduced television signal. Official Gazette of the U.S. Patent Office

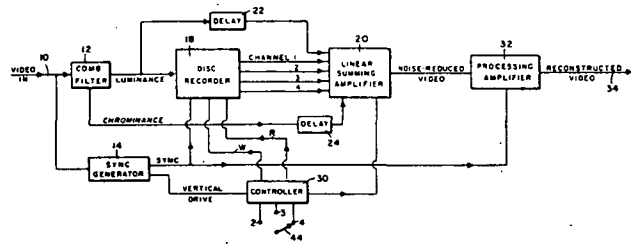

N75-33278*# National Aeronautics and Space Administration. Ames Research Center, Moffett Field, Calif.
SMOKE GENERATOR Patent Application
James R. Rogers, inventor (to NASA) Filed 1 Oct. 1975 21 p
(NASA-Case-ARC-10905-1; US-Patent-Appl-SN-618594) Avail: NTIS HC $3.25 CSCL 13K

A smoke generator is disclosed which is particularly suitable for mounting on the wing tips of an aircraft and for conducting airflow studies. The device includes a network of thermally insulated tubes for carrying a fluid which is used to produce smoke. The fluid, which need not be combustible, is heated above its vaporization temperature by electric current which is passed through the fluid conduit tubes, so that the tubes serve both as fluid conduits and resistance heating elements. Fluid supply and monitoring systems and electrical control systems are also disclosed. Author (NASA)

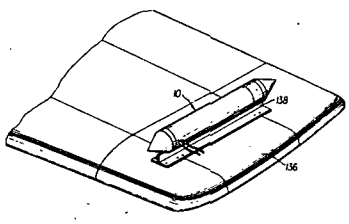

N75-21486* National Aeronautics and Space Administration. Lyndon B. Johnson Space Center, Houston, Tex.
DIGITAL TRANSMITTER FOR DATA BUS COMMUNICATIONS SYSTEM Patent
George Eugene Proch, inventor (to NASA) (Lockheed Electron. Co., Houston, Tex.) Issued 1 Apr. 1975 8 p Filed 27 Dec. 1973 Supersedes N74-17888 (12 - 09, p 1023) Sponsored by NASA
(NASA-Case-MSC-14558-1; US-Patent-3,875,332; US-Patent-Appl-SN-428994; US-Patent-Class-178-58A; US-Patent-Class-178-79) Avail: US Patent Office CSCL 17B

An improved digital transmitter for transmitting serial pulse code modulation (pcm) data at high bit rates over a transmission line is disclosed. When not transmitting, the transmitter features a high output impedance which prevents the transmitter from loading the transmission line. The pcm input is supplied to a logic control circuit which produces two discrete logic level signals which are supplied to an amplifier. The amplifier, which is transformer coupled to the output isolation circuitry, converts the discrete logic level signals to two high current level, ground isolated signals in the secondary windings of the coupling transformer. The latter signals are employed as inputs to the

isolation circuitry which includes two series transistor pairs operating into a hybrid transformer functioning to isolate the transmitter circuitry from the transmission line.

Official Gazette of the U.S. Patent Office

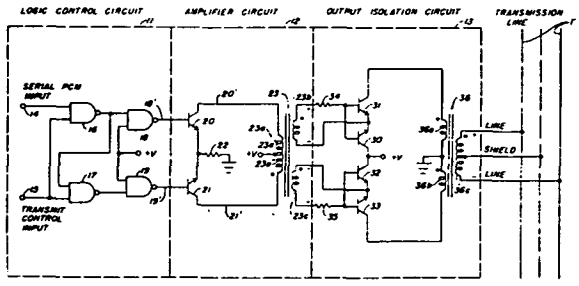

N75-22563*# National Aeronautics and Space Administration. *Goddard Space Flight Center, Greenbelt, Md.*

SPEECH ANALYZER Patent Application

Donald C. Lokerson, inventor (to NASA) Filed 9 Apr. 1975 23 p

(NASA-Case-GSC-11898-1; US-Patent-Appl-SN-566494) Avail: NTIS HC $3.25 CSCL 17B

A speech signal is analyzed by applying the signal to formant filters which derive first, second, and third signals respectively representing the frequency of the speech waveform in the first, second, and third formants. A first pulse train having approximately a pulse rate representing the average frequency of the first formant is derived; second and third pulse trains having pulse rates respectively representing zero crossings of the second and third formants are derived. The first formant pulse train is derived by establishing N signal level bands, where N is an integer at least equal to two. Adjacent ones of the signal bands have common boundaries, each of which is a predetermined percentage of the peak level of a complete cycle of the speech waveform. Normalization was attained in each instance by counting the number of pulses in the first and third pulse trains over the interval required for the pulses in the second train to reach a predetermined number. The resulting normalized pulse trains are supplied to a memory to identify a phoneme in the speech signal or are transmitted as narrow band width signals. NASA

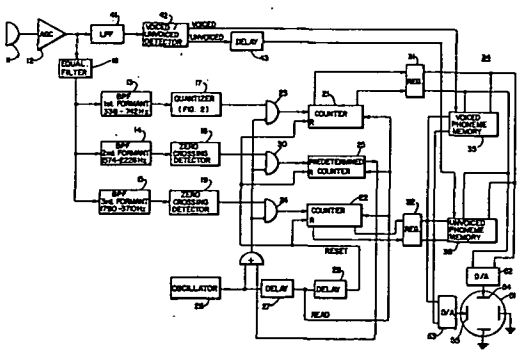

N75-24981* National Aeronautics and Space Administration. Goddard Space Flight Center, Greenbelt, Md.

MODULATOR FOR TONE AND BINARY SIGNALS Patent

James R. McChesney (Bell Aerospace Co., Buffalo), Theodore Lerner (Bell Aerospace Co., Buffalo), and Ernest J. Fitch, inventors (to NASA) (Bell Aerospace Co., Buffalo) Issued 15 Apr. 1975 8 p Filed 15 Jun. 1973 Supersedes N73-27107 (11 - 18, p 2116) Sponsored by NASA

(NASA-Case-GSC-11743-1; US-Patent-3,878,464; US-Patent-Appl-SN-370271; US-Patent-Class-325-30; US-Patent-Class-178-66R; US-Patent-Class-325-60) Avail: US Patent Office CSCL 09C

Tones and binary information are transmitted as phase variations on a carrier wave of constant amplitude and frequency. The carrier and tones are applied to a balanced modulator for deriving an output signal including a pair of sidebands relative to the carrier. The carrier is phase modulated by a digital signal so that it is + or - 90 deg out of phase with the predetermined phase of the carrier. The carrier is combined in an algebraic summing device with the phase modulated signal and the balanced modulator output signal. The output of the algebraic summing device is hard limited to derive a constant amplitude and frequency signal having very narrow bandwidth requirements. At a receiver, the tones and binary data are detected with a phase locked loop having a voltage controlled oscillator driving a pair of orthogonal detection channels.

Official Gazette of the U.S. Patent Office

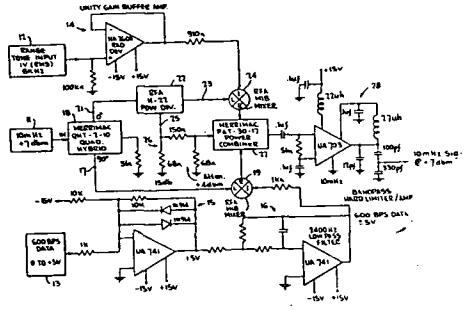

N75-24982* National Aeronautics and Space Administration. Pasadena Office, Calif.

SYSTEM FOR INTERFERENCE SIGNAL NULLING BY POLARIZATION ADJUSTMENT Patent

John E. Ohlson (JPL) and William F. Williams, inventors (to NASA) (JPL) Issued 13 May 1975 8 p Filed 28 Jun. 1973 Supersedes N73-27106 (11 - 18, p 2116) Sponsored by NASA

(NASA-Case-NPO-13140-1; US-Patent-3,883,872; US-Patent-Appl-SN-374422; US-Patent-Class-343-100PE; US-Patent-Class-343-5GC) Avail: US Patent Office CSCL 17B

A receiving system for automatically selecting a desired one of two approximately orthogonally polarized signals occupying the same bandwidth, is described. Received signals are provided by any orthomode antenna system at a pair of output ports, i.e., right hand and left hand circular polarizations or two linear polarizations. The received signals are then applied to the inputs of a hybrid junction to produce sum and difference signals. The resulting sum signal at one output port comprises components of the undesired one of two orthogonally polarized signals and is used to coherently detect and dynamically balance out the

undesired signal components that are included at the difference signal port. The desired one of two orthogonally polarized signals is thereby provided at the difference port of the hybrid junction. Feedback loops are used to effect dynamic balancing.

Official Gazette of the U.S. Patent Office

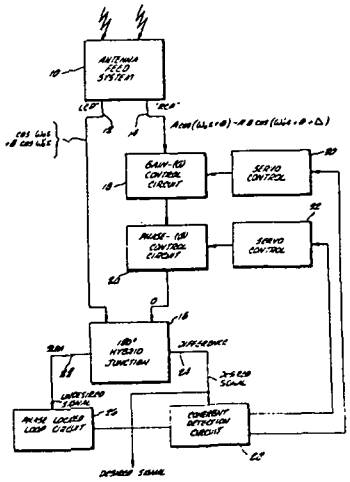

N75-26194* National Aeronautics and Space Administration. Pasadena Office, Calif.

VEHICLE LOCATING SYSTEM UTILIZING AM BROADCASTING STATION CARRIERS Patent

George R. Hansen, Jr., inventor (to NASA) (JPL) Issued 10 Jun. 1975 15 p Filed 21 May 1973 Supersedes N73-26144 (11 - 17, p 1997) Sponsored by NASA

(NASA-Case-NPO-13217-1; US-Patent-3,889,264; US-Patent-Appl-SN-362145; US-Patent-Class-343-105R; US-Patent-Class-343-112D) Avail: US Patent Office CSCL 17B

A vehicle locating system is disclosed which uses the carrier signals of unsynchronized commercial AM broadcasting stations to form hyperbolic isophase grid lines. Each vehicle is equipped with a three-channel receiver, and each channel is tuned to a different one of three spaced apart stations, in order to provide to a central station, information of motion from a known position by counting isophase lines crossed. A stationary receiver similarly counts isophase lines, which cross some fixed location due to drift in the transmission of the unsynchronized stations, and provide drift information which is subtracted from the vehicle motion information.

Official Gazette of the U.S. Patent Office

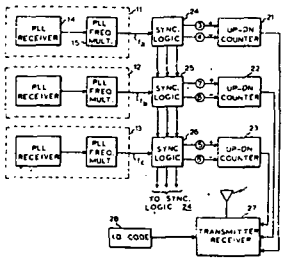

N75-26195* National Aeronautics and Space Administration. Pasadena Office, Calif.

ASYNCHRONOUS, MULTIPLEXING, SINGLE LINE TRANSMISSION AND RECOVERY DATA SYSTEM Patent

Tage O. Anderson, inventor (to NASA) (JPL) Issued 10 Jun. 1975 12 p Filed 27 Mar. 1974 Supersedes N74-19806 (12-11, p 1263) Sponsored by NASA

(NASA-Case-NPO-13321-1; US-Patent-3,889,064; US-Patent-Appl-SN-455163; US-Patent-Class-179-15BS; US-Patent-Class-325-4; US-Patent-Class-178-69.5R) Avail: US Patent Office CSCL 17B

Asynchronously multiplexed sample data sub-systems employ transmission over a single line to a remote synchronizer and demultiplexer. At the remote snychronizer, the data are recovered by synchronizing signals derived from the data itself. A sub-system, or satellite location, supplies continuously sampled binary data along with a satellite identification and synchronizing sequence as a satellite message frame. This information is supplied bit-serially, to a multiplexer junction. The multiplexed satellite information is delivered asynchronously onto a single line transmission channel with other like bit serial satellite message information from other satellite monitoring sites. Such satellite information is transmitted to a central collection and analysis site where it is demultiplexed according to the words and bits that make up a satellite message frame.

Official Gazette of the U.S. Patent Office

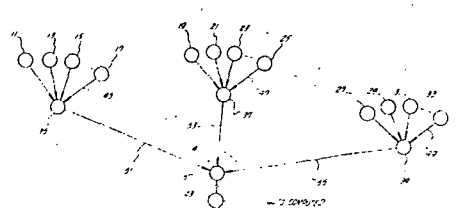

N75-26206*# National Aeronautics and Space Administration. Pasadena Office, Calif.

CHARGE-COUPLED DEVICE DATA PROCESSOR FOR AN AIRBORNE IMAGING RADAR SYSTEM Patent Application

Wayne E. Arens, inventor (to NASA) (JPL) Filed 23 Jun. 1975 38 p

(Contract NAS7-100)

(NASA-Case-NPO-13587-1; US-Patent-Appl-SN-589119) Avail: NTIS HC $3.75 CSCL 17I

The processing is described of raw analog echo data from a side-looking synthetic aperture radar receiver into images on board an airborne radar platform. The data were processed by using charge-coupled device (CCD) semiconductor technology; CCD circuits were utilized to perform input sampling, presumming,

range correlation, and azimuth correlation in the analog domain. These radar data processing functions were implemented for single-look or multiple-look imaging radar. NASA

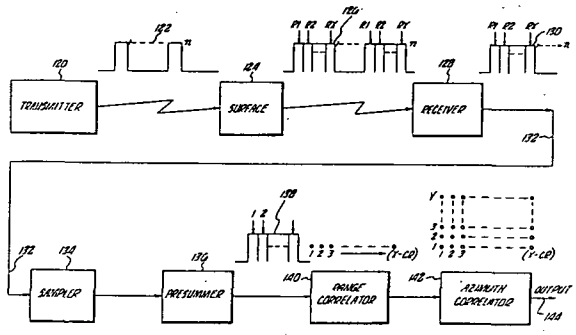

N75-26207*# National Aeronautics and Space Administration. Pasadena Office, Calif.

SPACE COMMUNICATION SYSTEM FOR COMPRESSED DATA WITH A CONCATENATED REED SOLOMON-VITERBI CODING CHANNEL Patent Application

Robert F. Rice (JPL) and Edward E. Hilbert, inventors (to NASA) (JPL) Filed 23 Jun. 1975 40 p

(Contract NAS7-100)

(NASA-Case-NPO-13545-1; US-Patent-Appl-SN-589173) Avail: NTIS HC $3.75 CSCL 17B

A communication system with a concatenated Reed Solomon-Viterbi coding channel for transmitting compressed and uncompressed data from a spacecraft is described. The system portion in the spacecraft includes a data compressor which compresses data from a source. The compressed data is first coded by a Reed Solomon coder and interleaver, followed by a convolutional encoder, whose output is modulated and transmitted by a modulator/transmitter; antipodal PSK-PM modulation of a square-wave subcarrier with S-band or X-band carrier takes place. The signals transmitted from the spacecraft to earth are assumed to be subjected to wideband Gaussian noise. On earth the system includes several deep space network stations, DSN1-DSNn. Each DSN includes a receiver/demodulator which includes a phase locked loop coherent demodulator with 3-bit quantized symbol output, which is decoded by a Viterbi decoder. NASA

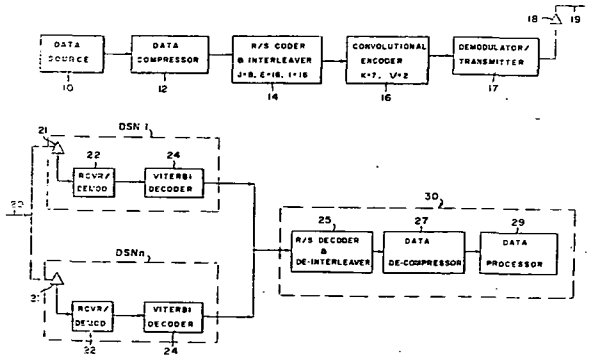

N75-30385*# National Aeronautics and Space Administration, Washington, D.C.

SYSTEM AND METHOD FOR TRACKING A SIGNAL SOURCE Patent Application

Louis N. Mogavero, Edwin G. Johnsen (NBS), John M. Evans, Jr. (NBS), and James S. Albus, inventors (to NASA) (NBS) Filed 11 Jul. 1975 17 p

(NASA-Case-HQN-10880-1; US-Patent-Appl-SN-595254) Avail: NTIS HC $3.25 CSCL 17B

A system for tracking moving signal sources, particularly stage performers, is described. A miniature transmitter is attached to the person or object to be tracked and emits a detectable signal of a predetermined frequency. A number of detectors, positioned in a preset pattern, sense the signal and supply output information to a phase detector which applies signals representing the angular orientation of the transmitter to a computer. The computer provides command signals to a servo network which drives a device, such as a spotlight or camera, to track the moving transmitter 10. NASA

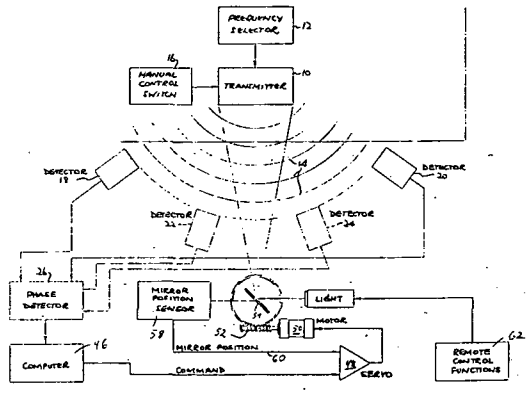

N75-32281*# National Aeronautics and Space Administration. Pasadena Office, Calif.

AN IMPROVED FURLABLE ANTENNA Patent Application

Morris A. Barnett, inventor (to NASA) (JPL) Filed 24 Sep. 1975 15 p

(Contract NAS7-100)

(NASA-Case-NPO-13553-1; US-Patent-Appl-SN-616333) Avail: NTIS HC $3.25 CSCL 09C

The antenna is characterized by an actuator comprising an elastomeric member of an annular configuration, and an annular array of uniformly spaced antenna ribs rigidly affixed at the base ends to the actuator and supported for pivotal displacement from a deployed configuration. The ribs are substantially radially extended from the actuator to a furled configuration, and are extended in substantial parallelism with the axis of the actuator. A reflector formed of a flexible mesh material is affixed to the ribs, and a plurality of angularly spaced bearing blocks support

every radially extended section of the member for rotation about its own centroid. By employing an elastomeric annular member as a deployment actuator, it is possible to achieve deployment of relatively large dish-shaped antenna reflectors in a celestial space environment. NASA

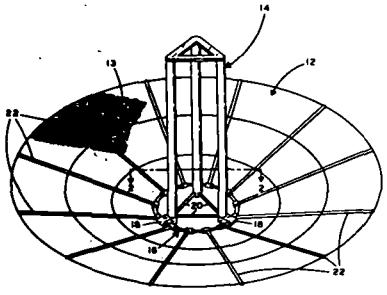

33 ELECTRONICS AND ELECTRICAL ENGINEERING

Includes test equipment and maintainability; components, e.g., tunnel diodes and transistors; microminiaturization; and integrated circuitry. For related information see also *60 Computer Operations and Hardware* and *76 Solid-State Physics.*

N75-21518*# National Aeronautics and Space Administration. Marshall Space Flight Center, Huntsville, Ala.

FREQUENCY MODULATED OSCILLATOR Patent Application

Martial A. Honnell, inventor (to NASA) (Auburn Univ.) Filed 9 Apr. 1975 11 p Sponsored by NASA

(NASA-Case-MFS-23181-1; US-Patent-Appl-SN-566495) Avail: NTIS HC $3.25 CSCL 09A

Devices for frequency modulation of radio frequency oscillators are described. In particular, a description is given of a frequency modulated push-pull oscillator in which the nonlinear characteristics of varactors producing frequency modulation is compensated for by an opposite nonlinear characteristic of a field effect transistor providing bias to the varactors. NASA

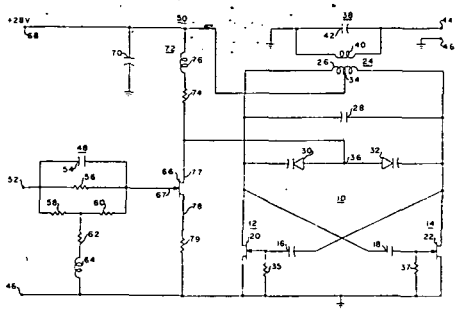

N75-25040* National Aeronautics and Space Administration. Goddard Space Flight Center, Greenbelt, Md.

DIGITAL PHASE-LOCKED LOOP Patent

Rodger A. Cliff, inventor (to NASA) Issued 13 May 1975 7 p Filed 20 Aug. 1973 *Supersedes* N73-31202 (11 - 22, p 2646)

(NASA-Case-GSC-11623-1; US-Patent-3,883,817; US-Patent-Appl-SN-389929; US-Patent-Class-331-1A; US-Patent-Class-331-18; US-Patent-Class-331-25) Avail: US Patent Office CSCL 09C

An digital phase-locked loop is provided for deriving a loop output signal from an accumulator output terminal. A phase detecting exclusive OR gate is fed by the loop digital input and output signals. The output of the phase detector is a bi-level digital signal having a duty cycle indicative of the relative phase of the input and output signals. The accumulator is incremented at a first rate in response to a first output level of the phase detector and at a second rate in response to a second output level of the phase detector.

Official Gazette of the U.S. Patent Office

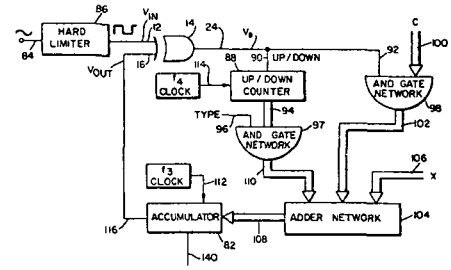

N75-25041* National Aeronautics and Space Administration. Ames Research Center, Moffett Field, Calif.

DIODE-QUAD BRIDGE CIRCUIT MEANS Patent

Dean R. Harrison and John Dimeff, inventors (to NASA) Issued 13 May 1975 7 p Filed 16 Jan. 1974 Continuation-in-part of abandoned US Patent Appl. SN-209618, Filed 20 Dec. 1971

(NASA-Case-ARC-10364-2; US-Patent-3,883,812; US-Patent-Appl-SN-433968; US-Patent-Class-329-166; US-Patent-Class-307-321; US-Patent-Class-324-DIG.1; US-Patent-Class-329-204; US-Patent-Appl-SN-209618) Avail: US Patent Office CSCL 09C

Diode-quad bridge circuit means is described for use as a transducer circuit or as a discriminator circuit. It includes: (1) a diode bridge having first, second, third, and fourth bridge terminals consecutively coupled together by four diodes polarized in circulating relationship; (2) a first impedance connected between the second bridge terminal and a circuit ground; (3) a second impedance connected between the fourth bridge terminal and the circuit ground; (4) a signal source having a first source terminal capacitively coupled to the first and third bridge terminals, and a second source terminal connected to the circuit ground; and (5) an output terminal coupled to the first bridge terminal and at which an output signal may be taken.

Official Gazette of the U.S. Patent Office

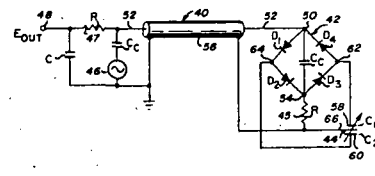

N75-25056*# National Aeronautics and Space Administration. Lewis Research Center, Cleveland, Ohio.
SUSTAINED ARC IGNITION SYSTEM Patent Application
Arthur G. Birchenough, inventor (to NASA) Filed 3 Jun. 1975 21 p
(NASA-Case-LEW-12444-1; US-Patent-Appl-SN-583485) Avail: NTIS HC $3.25 CSCL 21B

Circuitry for maintaining an arc or spark across a spark gap for a desired length of time is described. A high-voltage, direct-current (dc) source is connected in series with a secondary winding of a high voltage, step-up transformer or coil and a spark gap. The high-voltage source is controlled by a solid state switch which is responsive to a timing device such as a set of ignition contact points or a magnetic pulse generator operating in synchronism with a spark ignition engine. The timing device also provides signals to a current switching circuit which interrupts current flow through a primary winding of the high-voltage coil at the prescribed time that a spark is desired at the spark gap. The control circuit may include both a switch and a multivibrator if the timer is of the pulse-generating magnetic type. NASA

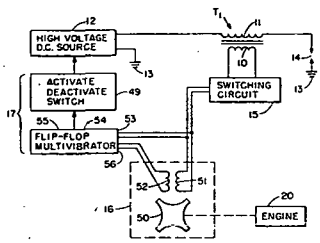

N75-26243* National Aeronautics and Space Administration. Goddard Space Flight Center, Greenbelt, Md.
CORRELATION TYPE PHASE DETECTOR Patent
William D. T. Davies (Bell Aerospace Co., Buffalo) and Stephen C. Martin, inventors (to NASA) (Bell Aerospace Co., Buffalo) Issued 1 Apr. 1975 7 p Filed 20 Apr. 1973 Supersedes N73-23291 (11-14, p 1640) Sponsored by NASA
(NASA-Case-GSC-11744-1; US-Patent-3,875,394; US-Patent-Appl-SN-353162; US-Patent-Class-235-181; US-Patent-Class-179-15BC; US-Patent-Class-235-150.53; US-Patent-Class-324-83Q; US-Patent-Class-328-133) Avail: US Patent Office CSCL 09E

The phase angles of each of a plurality of frequency multiplexed signals derived on a common lead and having predetermined frequencies are determined relative to predetermined phase angles of reference waves having the same frequencies as the signals. Correlators respond to the plural signals and reference waves to derive signals indicative of the orthogonal cross correlations of one reference wave with the signal for each frequency. The correlator includes integration means that is activated for the same time period for each cross correlation of each frequency. The integration means derives, at the end of each activation period, first and second signals respectively indicative of sin phi and cos phi for each of the frequencies. A computer responds to the first and second signals for each of the frequencies to derive an indication of phi for each of the frequencies. Official Gazette of the U.S. Patent Office

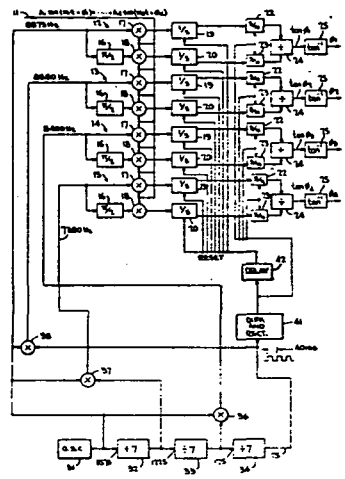

N75-26244* National Aeronautics and Space Administration. Marshall Space Flight Center, Huntsville, Ala.
APPARATUS FOR CALIBRATING AN IMAGE DISSECTOR TUBE Patent
Edwin E. Klingman, III, inventor (to NASA) Issued 10 Jun. 1975 8 p Filed 5 Mar. 1974 Supersedes N74-18100 (12 - 09, p 1050)
(NASA-Case-MFS-22208-1; US-Patent-3,889,155; US-Patent-Appl-SN-448325; US-Patent-Class-315-369; US-Patent-Class-315-10; US-Patent-Class-315-367; US-Patent-Class-315-387) Avail: US Patent Office CSCL 09C

An apparatus for calibrating digitally controlled image dissector tubes is described. The photosensitive screen of the tube is illuminated with a light pattern having parallel opposite edges. Then, a sweep signal is applied to the deflection coils causing the pattern to be scanned in a line perpendicular to the edges and generation of an output video pulse. The sweep signal is in the form of a time variable current whose average rate of change during the scan of the line is a constant and dependent on a settable control circuit. Measurement of the output pulse width permits the setting of the slope control circuit to be changed if the width differs from a standard associated with the tube whereby the scan rate is kept constant despite changes in the deflection sensitivity of the tube.
Official Gazette of the U.S. Patent Office

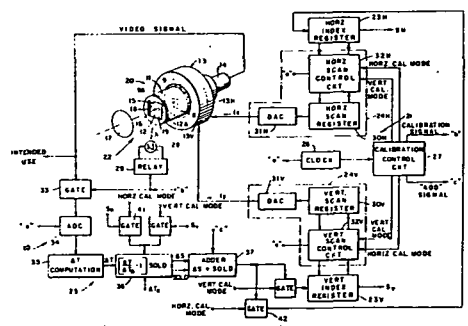

N75-26245* National Aeronautics and Space Administration. Langley Research Center, Langley Station, Va.

RESONANT WAVEGUIDE STARK CELL Patent

Wesley C. Easley, William F. White, and George A. Wingfield, inventors (to NASA) Issued 10 Jun. 1975 4 p Filed 10 Apr. 1974 Supersedes N74-19854 (12 - 11, p 1269)

(NASA-Case-LAR-11352-1; US-Patent-3,889,182; US-Patent-Appl-SN-459736; US-Patent-Class-324-58.5A; US-Patent-Class-23-254E; US-Patent-Class-324-58.5C) Avail: US Patent Office CSCL 09C

A resonant waveguide Stark cell suitable for use in a Stark-modulated microwave spectrometer was developed. The cell is constructed from a short guide of waveguide. A Stark electrode is located inside the wavelength parallel to the broad face of the guide and insulated from the walls of the guide with narrow teflon strips. A reflector with a small coupling iris at its center is located at one end of the cell. This small coupling iris is for passing microwave energy into and out of the cell. At the other end of the cell there is an adjustable waveguide short making the small Stark cell into a tuneable cavity which can be tuned for resonance at selected microwave frequencies. Means are provided for maintaining a gas-tight compartment within the cell, and ports are provided for the introduction of the gas to be analyzed into the gas-tight compartment.

Official Gazette of the U.S. Patent Office

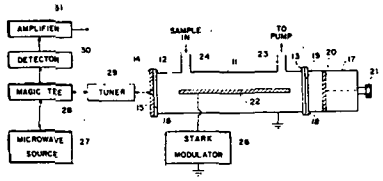

N75-26246* National Aeronautics and Space Administration. John F. Kennedy Space Center, Cocoa Beach, Fla.

***LIGHTNING CURRENT MEASURING SYSTEMS* Patent**

Ronald J. Wojtasinski, James H. Jones, and Raymond V. Lisle, inventors (to NASA) Issued 10 Jun. 1975 5 p Filed 15 Apr. 1974 Supersedes N74-22113 (12 - 13, p 1557)

(NASA-Case-KSC-10807-1; US-Patent-3,889,185; US-Patent-Appl-SN-461073; US-Patent-Class-324-72) Avail: US Patent Office CSCL 09C

An apparatus for monitoring and analyzing electrical currents produced by lightning strikes is described. The apparatus includes an electrical conductive mast with a circuit coupled to it for generating a dc voltage proportional to a peak current generated in the mast by each lightning strike. Another circuit is coupled to the mast for generating a digital signal representative of the wave shape of the current generated in the mast by each lightning strike, and a third circuit is provided closely adjacent the mast for producing a reference voltage. Signals are fed into a strip chart recorder making a permanent record of the current produced by the lightning strike.

Official Gazette of the U.S. Patent Office

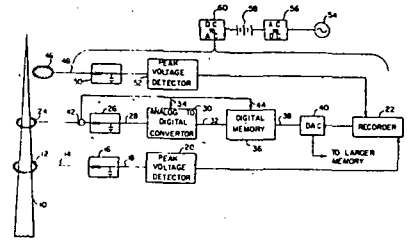

N75-26251*# National Aeronautics and Space Administration. Marshall Space Flight Center, Huntsville, Ala.

SOLID STATE CURRENT TRANSFORMER Patent Application

David L. Farnsworth, inventor (to NASA) (Westinghouse Electric Corp., Baltimore) Filed 23 Jun. 1975 11 p Sponsored by NASA

(NASA-Case-MFS-22560-1; US-Patent-Appl-SN-589233) Avail: NTIS HC $3.25 CSCL 09C

A signal transformation network is described which exhibits a very low input impedance while maintaining a linear transfer characteristic when driven from a voltage source and when quiescently biased in the low microampere current range. In its simplest form, it consists of a tightly coupled two-transistor network in which a common emitter input stage is interconnected directly with an emitter follower stage to provide virtually 100 percent negative feedback to the base input of the common emitter stage. Bias to the network is supplied via the common tie point of the common emitter stage collector terminal and the emitter follower base stage terminal by a regulated constant current source. The output of the circuit is taken from the collector of the emitter follower stage. NASA

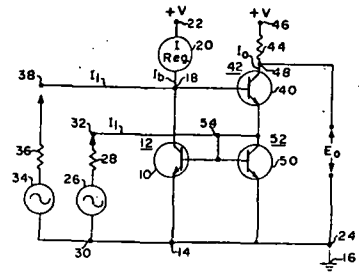

N75-26252*# National Aeronautics and Space Administration. Goddard Space Flight Center, Greenbelt, Md.

SWITCHABLE BEAMWIDTH MONOPULSE METHOD AND SYSTEM Patent Application

Leonard F. Deerkoski and Richard F. Schmidt, inventors (to NASA) Filed 30 May 1975 30 p

(NASA-Case-GSC-11924-1; US-Patent-Appl-SN-582318) Avail: NTIS HC $3.75 CSCL 09C

In a switchable beamwidth monopulse method and system, an antenna is described, comprising a curved reflector and a first set of monopulse feeds positioned in the Airy disk. The second set of monopulse feeds is positioned outside the Airy disk in the region of first bright Airy ring. In narrow beamwidth monopulse operation, monopulse sum and difference channel patterns are obtained from the first set of feeds within the Airy disk. In wide beamwidth monopulse operation, the difference channel pattern is obtained from the second set of feeds in the Airy ring. The sum channel pattern is obtained by attenuating and phase shifting the sum channel signal obtained from the first set of feeds, and adding the resultant to the sum channel signal obtained from the second set of feeds. The difference channel patterns for both narrow and wide beamwidth mode operation are obtained from the second set of feeds. NASA

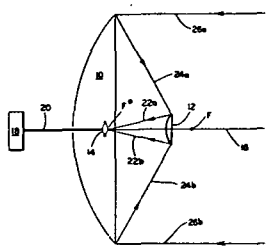

N75-27249* National Aeronautics and Space Administration. Lyndon B. Johnson Space Center, Houston, Tex.

MULTIPLE CIRCUIT PROTECTOR DEVICE Patent

George J. Weber, inventor (to NASA) (McDonnell Aircraft Co., St. Louis) Issued 25 Oct. 1966 6 p Filed 16 Mar. 1964 Sponsored by NASA

(NASA-Case-XMS-02744; US-Patent-3,281,558; US-Patent-Appl-SN-351950; US-Patent-Class-200-129) Avail: US Patent Office CSCL 09A

An in-line, multiple-circuit protector device was designed to be lightweight, compact, accurate, and readily serviced for fuse replacement. The device has the following components and characteristics: a fuse to be used either as a permanent or a temporary part of a system; a line-fuse protector which can be combined with similar devices to protect a multiple-line circuit; an in-line, multiple-circuit connector with a removable fuse to protect the lines being connected; a protective fuse for multiple-line connector devices in which a capsule fuse element of desired capacity may be incorporated; and, a quick disconnected fitting with a fuse element capsule having pushfit pin and socket parts for mating with the two parts of the quick disconnect fitting.

Official Gazette of the U.S. Patent Office

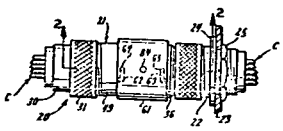

N75-27250* National Aeronautics and Space Administration. Pasadena Office, Calif.

VERY HIGH INTENSITY LIGHT SOURCE USING A CATHODE RAY TUBE Patent

Norman F. Fyler, inventor (to NASA) (Litton Industries, San Carlos, Calif.) Issued 15 Jun. 1965 5 p Filed 31 Jul. 1961 Sponsored by NASA

(NASA-Case-XNP-01296; US-Patent-3,189,784; US-Patent-Appl-SN-127984; US-Patent-Class-315-30) Avail: US Patent Office CSCL 09A

A light source which is much brighter and which lasts for a much shorter time period than strobing light sources is described. A cathode ray tube with a faceplate coated with a phosphor with a relatively short persistency, and a cathode with a broad surface, area, of the same order of magnitude as the area of the faceplate are utilized. In order to focus electrons onto the faceplate, the cathode is preferably concave, of the 'Pierce cathode' type or of other concave form. A grid is provided to control the application of brief pulses of a high intensity electron beam to the phosphor coating. The screen of the cathode ray tube is saturated with an electron beam of high density and high intensity. A phosphor with a relatively short persistency, for light to decay to less than one-half its maximum brightness, is employed. Where electron beam pulse lengths of 10 to 20 nanoseconds are employed, the total duration of the emitted pulse of light will be less than 40 nanoseconds, or less than one twenty-fifth of a microsecond.

Official Gazette of the U.S. Patent Office

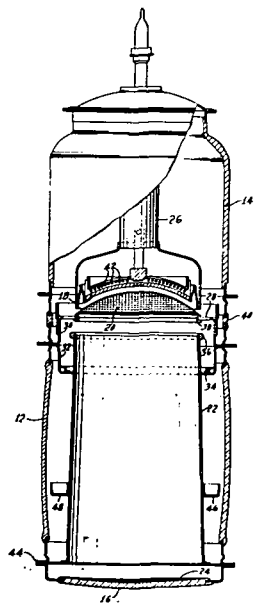

N75-27251* National Aeronautics and Space Administration, Washington, D.C.

TRAVELING WAVE SOLID STATE AMPLIFIER UTILIZING A SEMICONDUCTOR WITH NEGATIVE DIFFERENTIAL MOBILITY Patent

Gordon S. Kino (Stanford Univ., Calif.) and Peter N. Robson, inventors (to NASA) (Stanford Univ., Calif.) Issued 29 Dec. 1970 8 p Filed 21 Jun. 1968 Sponsored by NASA

(NASA-Case-HQN-10069; US-Patent-3,551,831; US-Patent-Appl-SN-739072; US-Patent-Class-330-5) Avail: US Patent Office CSCL 09A

A distributed two-port, traveling-wave solid-state amplifier using the transferred electron mechanism in certain semiconductor

compounds was designed. Electrodes were alloyed to two ends of a specimen of N-type gallium arsenide and two probes were provided, one to inject an AC signal near the most negative point in the field, and the other to extract the amplified signal near the most positive point in the field, with a gain of 2 to 4 db in the 700 to 1500 mHz frequency range. The amplifier has a region of negative differential mobility in its drift-velocity electric field characteristic as well as means for inhibiting oscillation. Official Gazette of the U.S. Patent Office

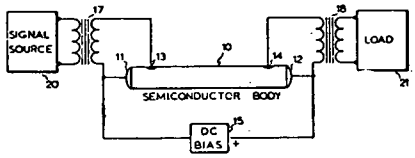

dc electronically commutated motors. A schematic diagram of the circuit is given, including a delta resistor network coupled at terminals to three sensors for determining the angular position of a rotor. Six decoding transistors are coupled to the delta network to sense the potential difference across the three resistors in the network. NASA

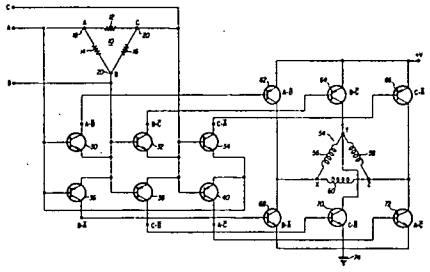

N75-27252* National Aeronautics and Space Administration. Langley Research Center, Langley Station, Va.
ELECTROLYTIC CELL STRUCTURE Patent
David F. Putnam (McDonnell-Douglas Corp., Santa Monica, Calif.) and Richard L. Vaughan, inventors (to NASA) (McDonnell-Douglas Corp., Santa Monica, Calif.) Issued 24 Jun. 1975 6 p Filed 8 Feb. 1974 Supersedes N74-29416 (12 - 19, p 2238) Sponsored by NASA
(NASA-Case-LAR-11042-1; US-Patent-3,891,533; US-Patent-Appl-SN-440916; US-Patent-Class-204-267; US-Patent-Class-204-242; US-Patent-Class-204-279; US-Patent-Class-204-286; US-Patent-Class-204-290R) Avail: US Patent Office CSCL 09A

An electrolytic cell is described which consists of a stack of polysulfone plates faced with sheets of platinum. The sheets are bonded by silicone rubber and mechanically secured to their plates by Teflon screws having heads serving as spacers between opposed platinum sheets.
Official Gazette of the U.S. Patent Office

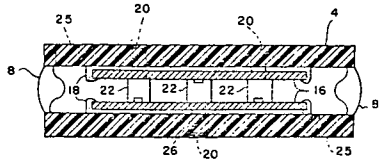

N75-27254*# National Aeronautics and Space Administration. Goddard Space Flight Center, Greenbelt, Md.
THREE PHASE FULL WAVE dc MOTOR DECODER Patent Application
Philip A. Studer, inventor (to NASA) Filed 3 Jun. 1975 17 p (NASA-Case-GSC-11824-1; US-Patent-Appl-SN-583486) Avail: NTIS HC $3.25 CSCL 09A

A circuit was designed which is capable of providing six-phased output signals for fullwave operation of three-phase

N75-27261*# National Aeronautics and Space Administration. Langley Research Center, Langley Station, Va.
ROTATING JOINT SIGNAL COUPLER Patent Application
Walt C. Long, inventor (to NASA) Filed 11 Jul. 1975 9 p (NASA-Case-LAR-11264-1; US-Patent-Appl-SN-594971) Avail: NTIS HC $3.25 CSCL 09A

A method is described of coupling an electrical signal across the rotating joint of such members as helicopter rotors. A two element capacitor, one element of which rotates with the rotating member and the other element of which is stationary, is used as an integral part of the electrical circuit for such purposes as testing of rotating parts. A rotating capacitor is formed by rotating a circular plate attached to a shaft and a stationary circular plate attached to a stationary member. Together these plates which are appropriately insulated from the members to which they are attached, form a capacitor in the electrical circuit. The electrical circuit for measurement is described in which rotating capacitor isolates the rotating components from the stationary components. The coupler has the ability to transfer information between rotating and stationary portions of an electrical circuit without distortion and without the addition of expensive and critical components. NASA

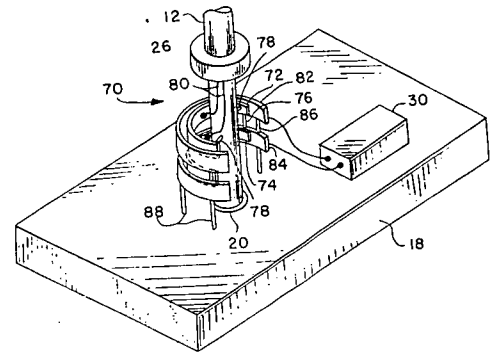

N75-27265*# National Aeronautics and Space Administration. Goddard Space Flight Center, Greenbelt, Md.

METHOD AND APPARATUS FOR NEUTRALIZING POTENTIALS INDUCED ON SPACECRAFT SURFACES Patent Application

Robert E. Hunter, inventor (to NASA) Filed 11 Jul. 1975 15 p

(NASA-Case-GSC-11963-1; US-Patent-Appl-SN-595197) Avail: NTIS HC $3.25 CSCL 09C

A potential induced on the surface of an orbiting spacecraft is neutralized to the potential of a plasma through which the spacecraft is traveling by directing charged particles into the plasma from the spacecraft surface. The induced potential occurs in response to bombardment of the spacecraft surface by ambient charged particles which may be negative or positive. The charged particles directed into the plasma from the surface have the same polarity as the induced potential to provide the neutralization. The invention can be utilized to maintain different, electrically isolated segments of a spacecraft surface at the same potential to prevent electric discharges between the different parts and to protect electric circuits within the spacecraft. The invention can also be utilized to enable charged particle detectors on the surface of a spacecraft to operate more accurately so that the particles are not perturbed by a potential difference between the spacecraft surface and the plasma. NASA

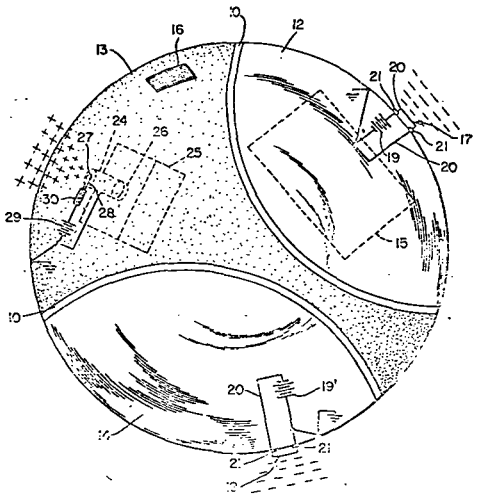

N75-28316*# National Aeronautics and Space Administration. Lewis Research Center, Cleveland, Ohio.

ELECTRONIC ANALOG DIVIDER Patent Application

Arthur G. Birchenough, inventor (to NASA) Filed 24 Jul. 1974 10 p

(NASA-Case-LEW-11881-1; US-Patent-Appl-SN-598968) Avail: NTIS HC $3.25 CSCL 09C

An electronic analog dividing circuit is described which shows accuracy at relatively low denominator (divisor) values. The known exponential characteristic of a diode was used which is, that particularly at low forward voltages and currents, the current is an exponential function of the voltage applied across the diode, and the incremental impedance of the diode is inversely proportional to the current through the diode. The diode bias current was made proportional to the desired denominator, and the incremental signal current was applied across the diode as a numerator; the resultant incremental voltage across the diode is proportional to the desired quotient. NASA

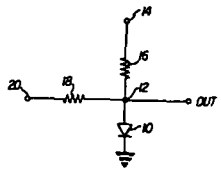

N75-29318* National Aeronautics and Space Administration. Ames Research Center, Moffett Field, Calif.

ELECTRIC ARC LIGHT SOURCE HAVING UNDERCUT RECESSED ANODE Patent

Delbert G. VanOrnum (Giannini Scientific Corp.), William A. Geideman, Jr. (Giannini Scientific Corp.), and Kurt Muller, inventors (to NASA) (Giannini Scientific Corp.) Issued 23 Sep. 1969 8 p Filed 11 Oct. 1966 Continuation-in-part of US Patent Appl. SN-453241, filed 29 Apr. 1965 Sponsored by NASA

(NASA-Case-ARC-10266-1; US-Patent-3,469,143; US-Patent-Appl-SN-585988; US-Patent-Class-315-111; US-Patent-Appl-SN-453241) Avail: US Patent Office CSCL 09A

A light or radiation source is described in which the light emanates from a high-current electric arc. This source, the vortex-stabilized radiation source, is characterized by high efficiency and arc stability, long electrode life at high power levels, readily-controllable emission, and other advantages.

Official Gazette of the U.S. Patent Office

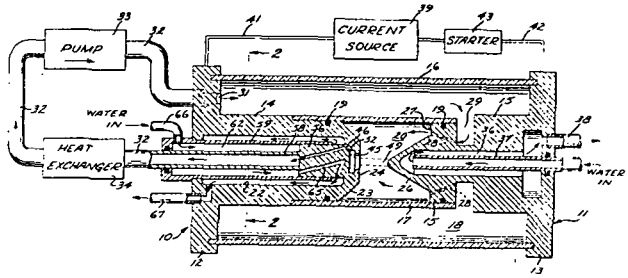

N75-29320*# National Aeronautics and Space Administration. Ames Research Center, Moffett Field, Calif.

TRIELECTRODE CAPACITIVE PRESSURE TRANSDUCER Patent Application

Grant W. Coon, inventor (to NASA) Filed 17 Jul. 1975 23 p

(NASA-Case-ARC-10711-2; US-Patent-Appl-SN-596788) Avail: NTIS HC $3.25 CSCL 09A

A capacitive transducer and circuit especially suited for making measurements in a high temperature environment was developed.

The transducer includes two capacitive electrodes and a shield electrode. As the temperature of the transducer rises, the resistance of the insulation between the capacitive electrode decreases and a resistive current attempts to interfere with the capacitive current between the capacitive electrodes. The coupling of the shield electrode and the circuit reduces the resistive current in the transducer. A bridge type circuit coupled to the transducer ignores the resistive current and measures only the capacitive current flowing between the capacitive electrodes. NASA

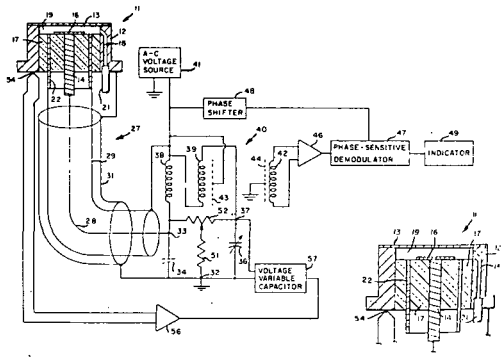

N75-30428* National Aeronautics and Space Administration. Marshall Space Flight Center, Huntsville, Ala.

INTEGRABLE POWER GYRATOR Patent

Erwin S. Hochmair, inventor (to NAS) (NAS-NRC) Issued 5 Aug. 1975 11 p Filed 18 May 1973 Supersedes N73-24236 (11 - 15, p 1756) Sponsored by NASA
(NASA-Case-MFS-22342-1; US-Patent-3,898,578;
US-Patent-Appl-SN-361666; US-Patent-Class-330-63;
US-Patent-Class-330-18; US-Patent-Class-330-40;
US-Patent-Class-330-13) Avail: US Patent Office CSCL 09A

A gyrator circuit is operated at high power levels of the conventional configuration of two amplifiers in a circular loop, one producing zero phase shift and the other producing 180 deg phase reversal. Two differential amplifiers are connected to the junction of two, complementary transistors so that output operation is class B. Each of the complementary transistors is connected to control two transistors in parallel, one of large conductive geometry and in a low resistance circuit and the other of small conductive geometry and in a resistance circuit. In a nonreciprocal embodiment, only the input port accommodates high power. Greatly increased efficiency is realized.

Official Gazette of the U.S. Patent Office

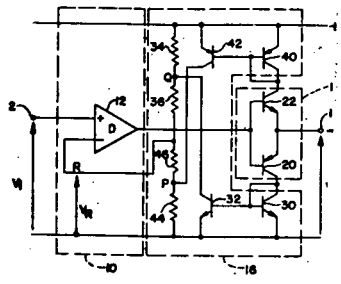

N75-30429* National Aeronautics and Space Administration. Marshall Space Flight Center, Huntsville, Ala.

ISOLATED OUTPUT SYSTEM FOR A CLASS D SWITCHING-MODE AMPLIFIER Patent

Martial A. Honnell, inventor (to NASA) (Auburn Univ.) Issued 12 Aug. 1975 8 p Filed 26 Apr. 1974 Supersedes N74-21859 (12 - 13, p 1527) Sponsored by NASA
(NASA-Case-MFS-21616-1; US-Patent-3,899,745;
US-Patent-Appl-SN-464723; US-Patent-Class-330-207A;
US-Patent-Class-330-24) Avail: US Patent Office CSCL 09C

A class D amplifier for the amplification of signals having unipolar or bipolar direct current, or alternating current is described. Positive and negative signal channels and a transformer-coupled output circuit for each channel are included. A switching circuit which effects isolation of the non-operating channel from the operating channel as a function of signal polarity is also described. Official Gazette of the U.S. Patent Office

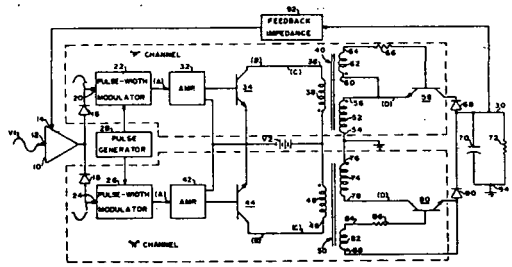

N75-30430* National Aeronautics and Space Administration. Pasadena Office, Calif.

REFRIGERATED COAXIAL COUPLING Patent

Ervin R. Wiebe (JPL) and Robert C. Clauss, inventors (to NASA) (JPL) Issued 26 Aug. 1975 7 p Filed 27 Jun. 1974 Supersedes N74-2789 (12 - 17, p 2014) Sponsored by NASA
(NASA-Case-NPO-13504-1; US-Patent-3,903,143;
US-Patent-Appl-SN-483852; US-Patent-Class-333-21R;
US-Patent-Class-333-83BT; US-Patent-Class-33-96;
US-Patent-Class-333-98R) Avail: US Patent Office CSCL 09C

A transmission line for improving the sensitivity of a maser or other microwave processing equipment by using a cooled coaxial line for coupling a waveguide to a refrigerated maser, is discribed. The central coaxial conductor has an outer end projecting into the waveguide and covered by a quartz dome. The space between the central and outer conductors of the coaxial line is evacuated to minimize heat transfer, the central coaxial conductor is supported by the outer conductor at its inner end which is refrigerated to less than 5 Kelvin, and the central coaxial conductor is a short solid copper rod to maintain the outer end at a low temperature. Official Gazette of the U.S. Patent Office

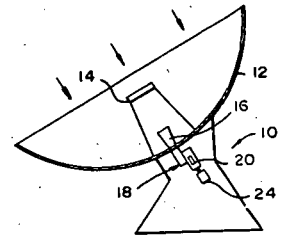

N75-30431* National Aeronautics and Space Administration. John F. Kennedy Space Center, Cocoa Beach, Fla.

DUAL DIGITAL VIDEO SWITCHER Patent

Ian A. Richter, inventor (to NASA) Issued 19 Aug. 1975 16 p Filed 25 Sep. 1973 Supersedes N73-32063 (11 - 23, p 2757)

(NASA-Case-KSC-10782-1; US-Patent-3,900,705; US-Patent-Appl-SN-400467; US-Patent-Class-178-6.8; US-Patent-Class-178-DIG.1) Avail: US Patent Office CSCL 09C

A system is described for manually and automatically coupling video signals from a plurality of cameras to a monitoring apparatus. The system is comprised of a manual mode of operation, a continuous scan mode, a single scan mode, and a hold condition. The scanning mode is controlled by a shift register which is activated at various rates so as to vary the duration that a particular video signal is coupled to the monitoring apparatus. If the system is in the scan mode a push button can be depressed to hold the video signal coupled to the monitoring system until the operator desires to return to the scan cycle. Various logic circuits are utilized in the system for selecting a predetermined scanning sequence, as well as to permit the circuit to be manually operable under control of an operator.

Official Gazette of U.S. Patent Office

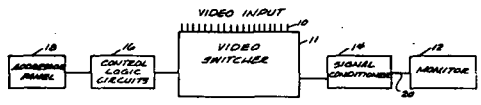

N75-31329* National Aeronautics and Space Administration. Pasadena Office, Calif.

SUBMINIATURE INSERTABLE FORCE TRANSDUCER Patent

Robert H. Silver (JPL), Gilbert W. Lewis (JPL), Cyril Feldstein (JPL), and Edward N. Duran, inventors (to NASA) (JPL) Issued 16 Sep. 1975 6 p Filed 15 May 1974 Sponsored by NASA (NASA-Case-NPO-13423-1; US-Patent-3,905,356; US-Patent-Appl-SN-470429; US-Patent-Class-128-2S; US-Patent-Class-338-2; US-Patent-Class-73-88.5) Avail: US Patent Office CSCL 09A

A sub-miniature transducer is described which is suitable for measuring forces at a predetermined location within muscle tissue; it includes a small diameter tube with a slit at the lower end that forms a pair of tines, and a strain gauge fixed within the tube to one of the tines for measuring slight deflections of the tine. The tube can be inserted into muscle tissue to measure forces at a location deep within the tissue and with minimal disturbance to the tissue, and the tube can be turned to any orientation to measure forces in different directions.

Official Gazette of the U.S. Patent Office

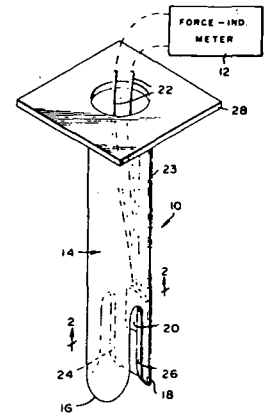

N75-31330* National Aeronautics and Space Administration. Pasadena Office, Calif.

SYMMETRICAL ODD-MODULUS FREQUENCY DIVIDER Patent

Alexander Engel, inventor (to NASA) (JPL) Issued 16 Sep. 1975 5 p Filed 12 Mar. 1974 Supersedes N74-18869 (12 - 10, p 1145) Sponsored by NASA

(NASA-Case-NPO-13426-1; US-Patent-3,906,374; US-Patent-Appl-SN-45053; US-Patent-Class-328-41; US-Patent-Class-307-225R) Avail: US Patent Office CSCL 09A

A frequency divider arrangement is reported that can be used for division by an odd number and which provides a symmetrical output. It comprises an exclusive Or gate followed by a divide by 2N counter where (2N-1) equals the odd number. Input to the exclusive Or gate is from a pulse source and from the counter output.

Official Gazette of the U.S. Patent Office

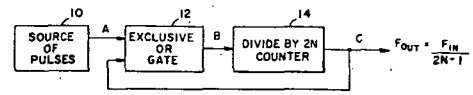

N75-31331* National Aeronautics and Space Administration. Pasadena Office, Calif.

STORED CHARGE TRANSISTOR Patent

Joseph Maserjian (JPL) and George W. Lewicki, inventors (to NASA) (JPL) Issued 16 Sep. 1975 12 p Filed 25 Aug. 1971 Supersedes N73-30974 (11 - 22, p 2617) Sponsored by NASA

(NASA-Case-NPO-11156-2; US-Patent-3,906,296; US-Patent-Appl-SN-174684; US-Patent-Class-357-7; US-Patent-Class-307-238; US-Patent-Class-340-173CA; US-Patent-Class-357-24) Avail: US Patent Office CSCL 09A

A stored charge device of the general type designated as an MNOS field-effect transistor, has its operation improved by embedding a thin metal layer between two insulating films used in the transistor. The embedded metal layer technique is used to provide a two-terminal thin-film stored charge device, consisting

of a metal-insulator-embedded-metal-insulator-metal, sandwich structure which can be used in high-density memory arrays.
Official Gazette of the U.S. Patent Office

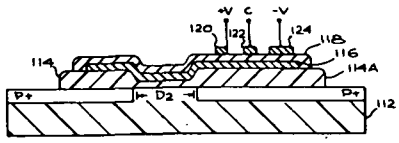

N75-31332* National Aeronautics and Space Administration. Pasadena Office, Calif.
DOPED JOSEPHSON TUNNELING JUNCTION FOR USE IN A SENSITIVE IR DETECTOR Patent
Melvin M. Saffren, inventor. (to NASA) (JPL) Issued 16 Sep. 1975 12 p Filed 19 Mar. 1974 Supersedes N74-20022 (12 - 11 p 1291) Sponsored by NASA
(NASA-Case-NPO-13348-1; US-patent-3,906,231; US-Patent-Appl-SN-452770; US-Patent-Class-250-238; US-Patent-Class-250-370; US-Patent-Class-357-5) Avail: US Patent Office CSCL 09A

A superconductive tunneling device having a modified tunnel barrier capable of supporting Josephson tunneling current is provided. The tunnel barrier located between a pair of electrodes includes a molecular species which is capable of coupling incident radiation of a spectrum characteristic of the molecular species into the tunnel barrier. The coupled radiation modulates the known Josephson characteristics of the superconducting device. A superconductive tunneling device can be tuned or made sensitive to a particular radiation associated with the dopant molecular species. Semiconductor material can be utilized as the molecular species to provide an increased selective bandwidth response. Appropriate detector equipment is utilized to measure the modulation of any of the Josephson characteristics such as critical current, voltage steps, Lambe-Jaklevic peaks and plasma frequency. Official Gazette of the U.S. Patent Office

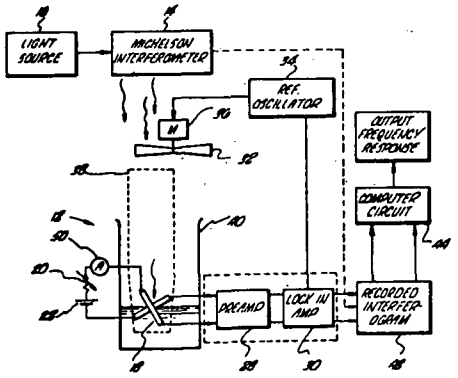

N75-32323*# National Aeronautics and Space Administration. Pasadena Office, Calif.
DISTRIBUTED FEEDBACK ACOUSTIC SURFACE WAVE OSCILLATOR Patent Application
Charles Elachi, inventor (to NASA) (JPL) Filed 12 Sep. 1975 17 p
(Contract NAS7-100)
(NASA-Case-NPO-13673-1; US-Patent-Appl-SN-613004) Avail: NTIS HC $3.25 CSCL 09C

An acoustic surface wave oscillator is constructed from a semiconductor-piezoelectric acoustic surface wave amplifier by providing appropriate perturbations at the piezoelectric boundary. The perturbations cause Bragg order reflections that maintain acoustic wave oscillation under certain conditions of gain and feedback. NASA

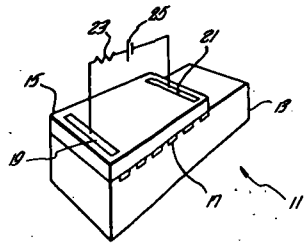

34 FLUID MECHANICS AND HEAT TRANSFER

Includes boundary layers; hydrodynamics; fluidics; mass transfer; and ablation cooling.For related information see also *02 Aerodynamics* and *77 Thermodynamics and Statistical Physics*.

N75-26282* National Aeronautics and Space Administration. Langley Research Center, Langley Station, Va.
FLUID CONTROL APPARATUS AND METHOD Patent
Charles W. McKee, inventor (to NASA) Issued 10 Jun. 1975 5 p Filed 30 Nov. 1973 Supersedes N74-29652 (12-19, p 2268)
(NASA-Case-LAR-11110-1; US-Patent-3,888,410; US-Patent-Appl-SN-420424; US-Patent-Class-233-6; US-Patent-Class-233-20RP; US-Patent-Class-233-25; US-Patent-Class-233-46; US-Patent-Class-233-DIG.1) Avail: US Patent Office CSCL 20D

A container for controlling and separating fluids and gases without using seals between movable parts is disclosed. The method works by placing the container in orbit about a circular path and holding it at a fixed orientation; the orientation coupled with the orbiting, cause the liquids and gases present to separate even when in a zero gravity environment. Flexible conduits provide for flow of liquids or gases to and from the interior of the container.
Official Gazette of the U.S. Patent Office

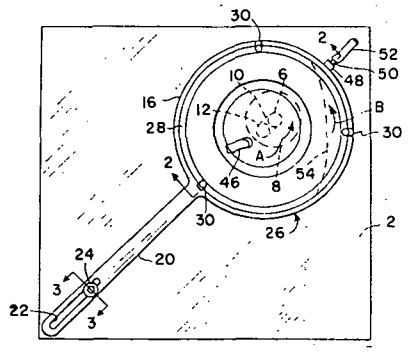

N75-32389*# National Aeronautics and Space Administration. Ames Research Center, Moffett Field, Calif.
APPARATUS FOR MEASURING A SORBATE DISPERSED IN A FLUID STREAM Patent Application
Otis L. Updike, inventor (to NASA) (Virginia Univ.) Filed 19 Sep. 1975 31 p Sponsored by NASA
(NASA-Case-ARC-10896-1; US-Patent-Appl-SN-615030) Avail: NTIS HC $3.75 CSCL 20D

An apparatus for measuring a sorbate dispersed or dissolved in a fluid stream was constructed. The apparatus is composed of an oscillator for generating an alternating current signal, an acoustic transmission line for disposition in the fluid stream, and an elongated body with a surface capable of sorbing an amount of the sorbate to be measured representative of the concentration in the fluid stream. The body is also capable of propagating acoustic energy along its length from one end portion to another end portion; the propagated acoustic energy is damped in amplitude and shifted in phase so that the change in amplitude or phase is proportional to the amount of sorbate sorbed by the surface. Two transducers and a comparator are also part of the system. One transducer converts ac signals to acoustic energy while the other converts the acoustic energy to an electrical signal at the other end of the body . The comparator compares the electrical signal to the ac signal and develops an output signal corresponding to the difference between the two; the output signal is indicative of the concentration of the sorbate in the fluid system. NASA

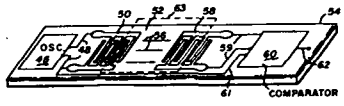

N75-33342* National Aeronautics and Space Administration. Lyndon B. Johnson Space Center, Houston, Tex.
FILTER REGENERATION SYSTEMS Patent
Victor A. DesCamp (Martin Marietta Corp., Denver), Michael W. Boex (Martin Marietta Corp., Denver), Michael W. Hussey (Martin Marietta Corp., Denver), and Thomas P. Larson, inventors (to NASA) (Martin Marietta Corp., Denver) Issued 23 Sep. 1975 21 p Filed 3 Aug. 1973 Supersedes N73-28179 (11 - 19, p 2255) Sponsored by NASA
(NASA-Case-MSC-14273-1; US-Patent-3,907,686;
US-Patent-Appl-SN-385522; US-Patent-Class-210-259;
US-Patent-Class-210-82; US-Patent-Class-210-234;
US-Patent-Class-210-304; US-Patent-Class-210-333;
US-Patent-Class-210-340; US-Patent-Class-210-411;
US-Patent-Class-210-425; US-Patent-Class-210-512) Avail: US Patent Office CSCL 20D

A system is described for regenerating a system filter in a fluid flow line where the filter normally retains particulate matter entrained in the fluid flow in one direction. The system involves a filter structure in which reverse or back flow through the filter will dislodge particulate matter from a filter element in the filter. Entrained particulate in the fluid back flow is passed to a vortex separator which separates by centrifugal forces and densities, the particulate from the fluid. The cleansed fluid is passed through a separate filter and can be returned to the system. The system for using the separator and separate filter in conjuction with the system filter can take the various forms including: embodiments where an independent pump is employed and the system filter is releasably coupled with separator, the separate filter, and the pump in a closed loop, and embodiments where the fluid from the system is diverted by valves to reverse through the system filter and output to the system from the separate filter.
Official Gazette of the U.S. Patent Office

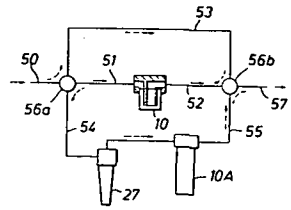

35 INSTRUMENTATION AND PHOTOGRAPHY

Includes remote sensors; measuring instruments and gages; detectors; cameras and photographic supplies; and holography. For aerial photography see *43 Earth Resources.* For related information see also *06 Aircraft Instrumentation* and *19 Spacecraft Instrumentation.*

N75-21582* National Aeronautics and Space Administration. Marshall Space Flight Center, Huntsville, Ala.
PSEUDO-NOISE TEST SET FOR COMMUNICATION SYSTEM EVALUATION Patent
Gabriel R. Wallace, William E. Salter (Sperry Rand Corp., Huntsville, Ala.), Glenn D. Weathers (Sperry Rand Corp., Huntsville, Ala.), and Sidney S. Gussow, inventors (to NASA) (Sperry Rand Corp., Huntsville, Ala.) Issued 1 Apr. 1975 6 p Filed 28 Nov. 1973 Supersedes N74-13146 (12- 04, p 0413)
(NASA-Case-MFS-22671-1; US-Patent-3,875,500;
US-Patent-Appl-SN-419831; US-Patent-Class-324-57PS;
US-Patent-Class-178-69A; US-Patent-Class-235-181;
US-Patent-Class-324-77H; US-Patent-Class-325-67) Avail: US Patent Office CSCL 14B

A test set for communications systems is described which includes a pseudo noise sequence generator providing a test signal that is fed to a pair of signal channels. The first channel includes a spectrum shaping filter and a conditioning amplifier. The second channel includes a variable delay circuit, a spectrum shaping filter matched to the first filter, and an amplifier. The output of the first channel was applied to the system under test. The output of the system and the output of the second channel are compared to determine the degree of distortion suffered by the test signal due to the communications system.
Official Gazette of the U.S. Patent Office

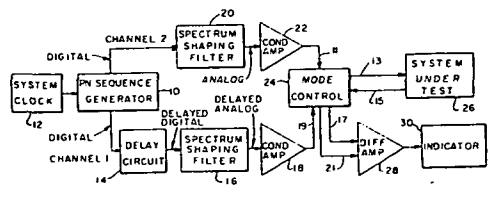

N75-21600*# National Aeronautics and Space Administration. Pasadena Office, Calif.

METHOD AND APPARATUS FOR PROVIDING A SERVO-DRIVE SIGNAL IN A HIGH SPEED STEPPING INTERFEROMETER Patent Application

Rudolf A. Schindler, inventor (to NASA) (JPL) Filed 4 Apr. 1975 30 p

(Contract NAS7-100)

(NASA-Case-NPO-13569-1; US-Patent-Appl-SN-565162) Avail: NTIS HC $3.75 CSCL 14B

In infrared spectroscopy utilizing an interferometer, position stepping of the optical path difference in the interferometer must be accomplished quite rapidly. This is accomplished by applying a drive signal to the moveable mirror in the interferometer. As the mirror moves in response to this drive signal, effectively getting closer to the new null point, the drive signal is gradually reduced, in response to detected reference laser fringes. At the new null position, the drive signal will effectively be zero. A binary up/down counter drives a digital/analog converter (DAC). The output from the DAC is supplied to the mirror moving means. The fringes generated by a reference laser are detected as the mirror moves, causing the up/down counter to be decremented to its null count, thereby reducing the output of the DAC.

NASA

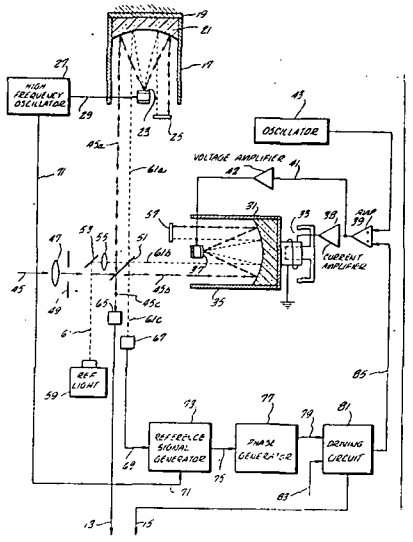

N75-21601*# National Aeronautics and Space Administration. Pasadena Office, Calif.

SAMPLER OF GAS BORNE PARTICLES Patent Application

Charles G. Miller (JPL) and James B. Stephens, inventors (to NASA) (JPL) Filed 28 Mar. 1975 17 p

(Contract NAS7-100)

(NASA-Case-NPO-13396-1; US-Patent-Appl-SN-563283) Avail: NTIS HC $3.25 CSCL 14B

An atmosphere sampler includes a very thin filter element with straight-through holes on the order of 1 micron. A sample of air with particles to be examined is driven by means of a pressurized low molecular weight gas, e.g., He to the filter element front side. A partial vacuum may be present at the back side of the filter element. The pressure differential across the filter element is just below the rupture point of the filter element. By admixing a low molecular weight gas as the carrier gas with the air sampler, the velocity is maximized for the particular pressure differential across the filter element.

NASA

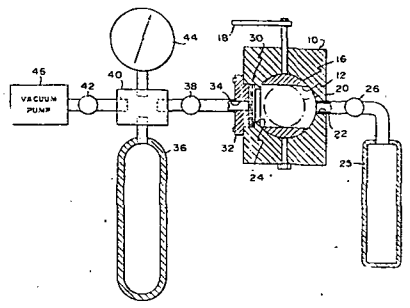

N75-22687*# National Aeronautics and Space Administration. Goddard Space Flight Center, Greenbelt, Md.

METHOD AND APPARATUS FOR MEASURING WEB MATERIAL WOUND ON A REEL Patent Application

Ronald M. Muller, inventor (to NASA) Filed 4 Apr. 1975 22 p

(NASA-Case-GSC-11902-1; US-Patent-Appl-SN-565289) Avail: NTIS HC $3.25 CSCL 14B

Method and apparatus for measuring the number of layers of a web material of known thickness wound on a storage or take-up reel were developed based on the principle that, at a relatively large radius, the loci of layers of a thin web wound on the reel approximate a family of concentric circles having radii respectively successively increasing by a length equal to the web thickness, t. The difference in circumferences between adjacent web layers is substantially constant and equal to 2 Pi t. Tachometer pulses are generated in response to linear movement of the web and reset pulses are generated in response to rotation of the reel. A digital circuit, responsive to the tachometer and reset pulses, generates data indicative of the layer number of any layer of the web and of position of the web within the layer without requiring numerical interpolation.

NASA

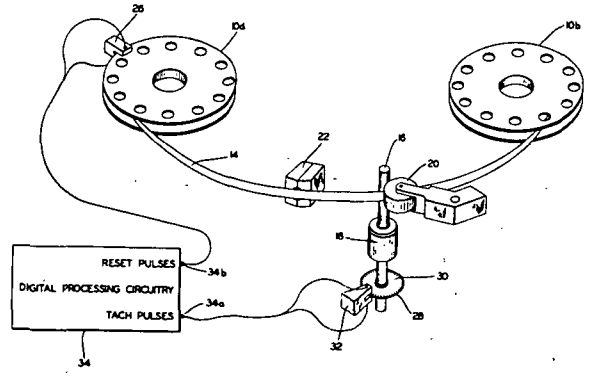

N75-22688*# National Aeronautics and Space Administration. Pasadena Office, Calif.
HIGH RESOLUTION FOURIER INTERFEROMETER-SPECTROPHOTOPOLARIMETER Patent Application
Alain L. Fymat, inventor (to NASA) (JPL) Filed 5 May 1975 32 p
(NAS7-100)
(NASA-Case-NPO-13604-1; US-Patent-Appl-SN-574219) Avail: NTIS HC $3.75 CSCL 14B

A Fourier spectropolarimeter was designed for use in a laboratory in determining high-resolution spectra of the four Stokes' parameters, providing the intensity and complete state of polarization of light reflected from, and transmitted through a scattering sample in a cell. A single linear polarizer-analyzer of variable orientation, and specially arranged mirrors is used. The mirrors are employed to switch between modes using three mirrors in each mode. Mirrors are paired for compensated (zero net) polarizing effect between them, and the third one introduces the same uncompensated polarizing effect in all three modes. The polarization interferograms can be recorded with the spectral resolution provided by the interferometer. NASA

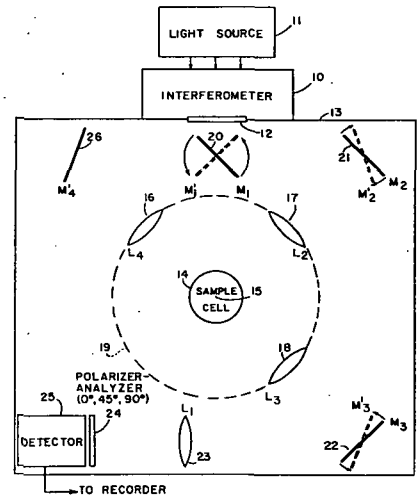

N75-22689*# National Aeronautics and Space Administration. Pasadena Office, Calif.
MYOCARDIUM WALL THICKNESS TRANSDUCER Patent Application
Cyril Feldstein, inventors (to NASA) (JPL), Gilbert W. Lewis (JPL), Robert H. Silver (JPL), and Virgil H. Cutler (JPL) Filed 5 May 1975 15 p
(Contract NAS7-100)
(NASA-Case-NPO-13644-1; US-Patent-Appl-SN-574218) Avail: NTIS HC $3.25 CSCL 06B

The design of an improved transducer for measuring myocardium wall thickness changes is discussed. A sensitive strain gauge is bonded to the beam to sense changes in the tension. The working end of the spike is inserted through the epicardium into the myocardium. As the heart contracts, larger beam-deforming forces are applied to the beam. Increased beam tension is sensed by the strain gauge and recorded. NASA

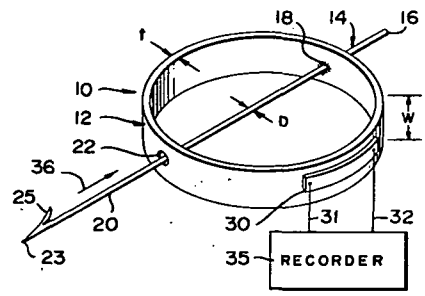

N75-23910* National Aeronautics and Space Administration. Pasadena Office, Calif.
WIDE ANGLE SUN SENSOR Patent
Larry L. Schumacher, inventor (to NASA) (JPL) Issued 1 Apr. 1975 8 p Filed 28 Dec. 1973 Supersedes N74-18093 (12-09, p 1049) Sponsored by NASA
(NASA-Case-NPO-13327-1; US-Patent-3,875,404; US-Patent-Appl-SN-429437; US-Patent-Class-250-211R; US-Patent-Class-250-203; US-Patent-Class-247-171) Avail: US Patent Office CSCL 18D

A single-axis sun sensor consists of a cylinder of an insulating material on which at least one pair of detectors is deposited on a circumference of the cylinder, was disclosed. At any time only one-half of the cylinder is illuminated so that the total resistance of the two detectors is a constant. Due to the round surface on which the detectors are deposited, the sensor exhibits a linear wide angle of + or - 50 deg to within an accuracy of about 2%. By depositing several pairs of detectors on adjacent circumferences, sufficient redundancy is realized to provide high reliability. A two-axis sensor is provided by depositing detectors on the surface of a sphere along at least two orthogonal great circles. Official Gazette of the U.S. Patent Office

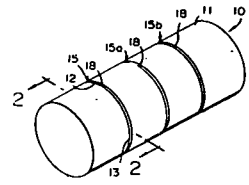

N75-25122* National Aeronautics and Space Administration. Pasadena Office, Calif.
HEAT DETECTION AND COMPOSITIONS AND DEVICES THEREFOR Patent
Alan Rembaum, inventor (to NASA) (JPL) Issued 1 Apr. 1975 8 p Filed 20 Jul. 1972 Supersedes N73-20259 (11 - 11, p 1264) Continuation-in-part of US Patent Appl. SN-836280, filed 25 Jun. 1969 Sponsored by NASA
(NASA-Case-NPO-10764-2; US-Patent-3,874,240; US-Patent-Appl-SN-273519; US-Patent-Class-73-356; US-Patent-Class-116-114.5; US-Patent-Class-117-72; US-Patent-Appl-SN-836280) Avail: US Patent Office CSCL 20M

Temperature change of a substrate such as a microelectronic component is sensed and detected by means of a mixture of a weak molecular complex of an electron donor compound such

as an organic amine and an electron acceptor compound such as nitroaromatic compound. The mixture is encapsulated in a clear binder such as a vinyl resin.

Official Gazette of the U.S. Patent Office

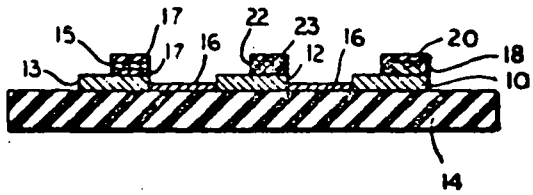

N75-25123* National Aeronautics and Space Administration. Pasadena Office, Calif.

SERVO-CONTROLLED INTRAVITAL MICROSCOPE SYSTEM Patent

Momtaz N. Mansour (JPL), Harold J. Wayland (JPL), and Carl P. Chapman, inventors (to NASA) (JPL) Issued 13 May 1975 7 p Filed 4 Sep. 1973 Supersedes N74-19093 (12 - 10, p 1173) Sponsored by NASA

(NASA-Case-NPO-13214-1; NASA-Case-NPO-13215-1; US-Patent-3,883,689; US-Patent-Appl-SN-394149; US-Patent-Class-178-7.2; US-Patent-Class-178-DIG.29) Avail: US Patent Office CSCL 14B

A microscope system is described for viewing an area of a living body tissue that is rapidly moving, by maintaining the same area in the field-of-view and in focus. A focus sensing portion of the system includes two video cameras at which the viewed image is projected, one camera being slightly in front of the image plane and the other slightly behind it. A focus sensing circuit for each camera differentiates certain high frequency components of the video signal and then detects them and passes them through a low pass filter, to provide dc focus signal whose magnitudes represent the degree of focus. An error signal equal to the difference between the focus signals, drives a servo that moves the microscope objective so that an in-focus view is delivered to an image viewing/recording camera.

Official Gazette of the U.S. Patent Office

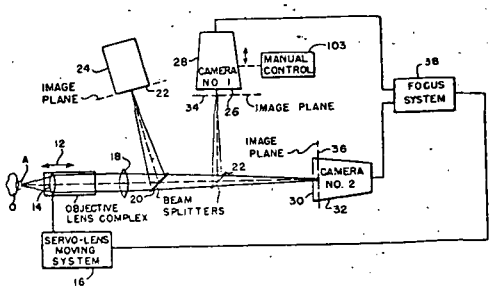

N75-25124* National Aeronautics and Space Administration. Marshall Space Flight Center, Huntsville, Ala.

HOLOGRAPHIC SYSTEM FOR NONDESTRUCTIVE TESTING Patent

Robert L. Kurtz, inventor (to NASA) Issued 13 May 1975 4 p Filed 8 Aug. 1973 Supersedes N73-30478 (11 - 21, p 2554) (NASA-Case-MFS-21704-1; US-Patent-3,883,215; US-Patent-Appl-SN-386793; US-Patent-Class-350-3.5) Avail: US Patent Office CSCL 14D

A description is given of a holographic system for nondestructive testing. The system is comprised of a mirror which illuminates the test object surface; the mirror is positionable to direct illumination on an object at varying angles with respect to a line normal to the surface of the object. In this manner holograms may be produced with varying degrees of sensitivity enabling optimum observation of dimensions of deformation of an object ockurring between test exposures.

Official Gazette of the U.S. Patent Office

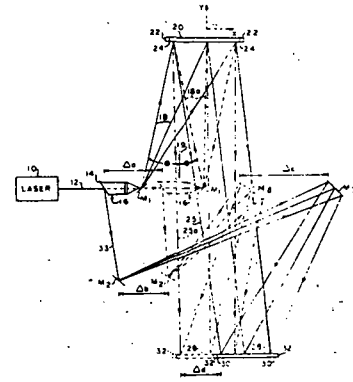

N75-25127*# National Aeronautics and Space Administration. Ames Research Center, Moffett Field, Calif.

HIGH SPEED DATA MONITORING APPARATUS Patent Application

Manfred N. Wirth, inventor (to NASA) Filed 12 May 1975 22 p

(NASA-Case-ARC-10899-1; US-Patent-Appl-SN-576774) Avail: NTIS HC $3.25 CSCL 09B

High speed data monitoring apparatus is described for displaying the bit pattern of a selected portion of a block of transmitted data comprising a shift register for receiving the transmitted data and for temporarily containing the consecutive data bits. A programmable sync detector monitors the contents of the shift register and generates a sync signal when the shift register contains a predetermined sync code. A counter is used for counting the data bits input to the shift register after the sync signal is generated and for generating a count complete

signal when a selected number of data bits were input to the register. A data storage device stores the contents of the shift register at the time the count complete signal is generated.

NASA

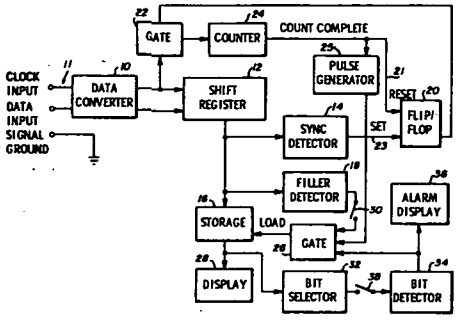

N75-25134*# National Aeronautics and Space Administration. Goddard Space Flight Center, Greenbelt, Md.

MAGNETIC TAPE HEAD FUNCTION SWITCHING SYSTEM Patent Application

Patrick H. Cudmore, inventor (to NASA) Filed 12 May 1975 17 p

(NASA-Case-GSC-11956-1; US-Patent-Appl-SN-576767) Avail: NTIS HC $3.25 CSCL 14B

A magnetic head function switching network for use with high density, bidirectional tape recording systems is disclosed. A first embodiment of the system includes a dedicated erasing head and a pair of recording-reproducing heads, the functions of which may be alternated. A second embodiment of the invention includes a dedicated reproducing head and a pair of recording-erasing heads, the functions of which may be alternated. The system is suitable for use with high density reel-to-reel recorders of the type used in scratch pad memories for computer and similar systems, especially those adapted for use in satellite systems.

NASA

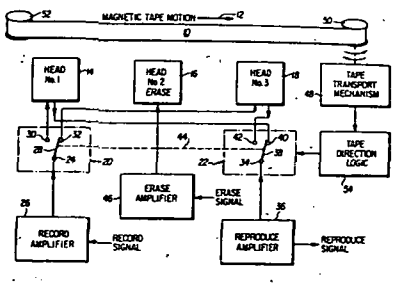

N75-26334* National Aeronautics and Space Administration. Ames Research Center, Moffett Field, Calif.

GAS CHROMATOGRAPH INJECTION SYSTEM Patent

Glenn E. Pollock, Milton E. Henderson, and Ralph W. Donaldson, Jr., inventors (to NASA) Issued 3 Jun. 1975 7 p Filed 27 Feb. 1974 Supersedes N74-20021 (12-11, p 1290)

(NASA-Case-ARC-10344-2; US-Patent-3,887,345; US-Patent-Appl-SN-446564; US-Patent-Class-55-386) Avail: US Patent Office CSCL 14B

An injection system for a gas chromatograph is described which uses a small injector chamber (available in various configurations). The sample is placed in the chamber while the chamber is not under pressure and is not heated, and there is no chance of leakage caused by either pressure or heat. It is injected into the apparatus by changing the position of a valve and heating the chamber, and is volatilized and swept by a carrier gas into the analysis apparatus.

Official Gazette of the U.S. Patent Office

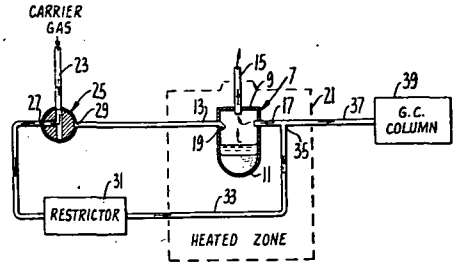

N75-27328* National Aeronautics and Space Administration. Marshall Space Flight Center, Huntsville, Ala.

REAL TIME, LARGE VOLUME, MOVING SCENE HOLOGRAPHIC CAMERA SYSTEM Patent

Robert L. Kurtz, inventor (to NASA) Issued 10 Jun. 1975 15 p Filed 10 Aug. 1973 Supersedes N74-28932 (12 - 18, p 2174)

(NASA-Case-MFS-22537-1; US-Patent-3,888,561; US-Patent-Appl-SN-387266; US-Patent-Class-350-3.5) Avail: US Patent Office CSCL 14E

A holographic motion picture camera system is described which produces resolution of front surface detail. The system utilizes a beam of coherent light and means for dividing the beam into a reference beam for direct transmission to a conventional film transport, and three reflection signal beams for transmission to the film transport by reflection from the three orthogonal sides of a moving scene. The system is arranged so that critical parts of the system are positioned on the foci of three interrelated mathematically-derived ellipses. The camera has the theoretical capability of producing motionpicture holograms of an object moving at speeds as high as 900,000 cm/sec

(about 21,450 mph). The system has the capability of handling objects of relatively large volume moving in a random direction anywhere within a volume.

Official Gazette of the U.S. Patent Office

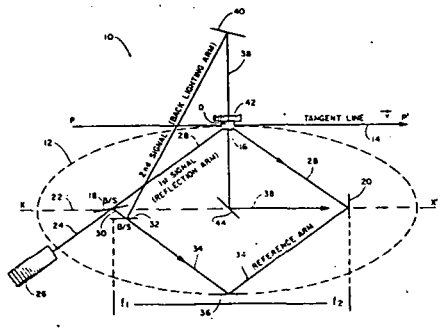

N75-27329* National Aeronautics and Space Administration. Marshall Space Flight Center, Huntsville, Ala.

METHOD AND APPARATUS FOR VIBRATION ANALYSIS UTILIZING THE MOSSBAUER EFFECT Patent

Norbert A. Roughton, inventor (to NASA) (Rockwell Intern. Corp., Canoga Park, Calif.) Issued 8 Jul. 1969 9 p Filed 11 Mar. 1966 Sponsored by NASA

(NASA-Case-XMF-05882; US-Patent-3,454,766; US-Patent-Appl-SN-533650; US-Patent-Class-250-83.3) Avail: US Patent Office CSCL 14B

An apparatus and method are described for analyzing or calibrating the vibratory motion characteristics of a transducer utilizing the Mossbauer effect. The energy and density are sampled at preselected times with reference to the alternating motion of a Mossbauer gamma ray source attached to the transducer.

Official Gazzette of the U.S. Patent Office

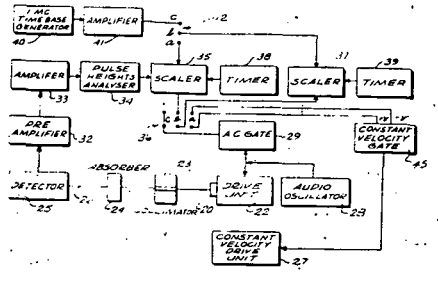

N75-27330* National Aeronautics and Space Administration. Langley Research Center, Langley Station, Va.

AUTOMATIC MICROBIAL TRANSFER DEVICE Patent

Judd R. Wilkins and Stacey M. Mills, inventors (to NASA) Issued 20 May 1975 5 p Filed 26 Oct. 1973 Supersedes N74-10422 (12 - 01, p 0053)

(NASA-Case-LAR-11354-1; US-Patent-3,884,765; US-Patent-Appl-SN-409990; US-Patent-Class-195-127; US-Patent-Class-195-141; US-Patent-Class-195-120; US-Patent-Class-195-103.5R) Avail: US Patent Office CSCL 14B

An apparatus is disclosed for automatically transferring a predetermined amount of inoculated culture from a first container into a second container having a sterile culture therein. The containers rest on the top of a pivoted support surface, and a horizontally disposed conduit connects them. The support surface is pivoted from its normal horizontal position by a solenoid which is activated under the control of an electrical timer. When the solenoid is inactive, the catch is connected to the first end of the support surface to hold it in its normal horizontal position. When the solenoid is activated, the catch releases the support surface into a freely pivoting state; a weight disposed on the second end of the support surface tips the support surface from its normal horizontal position causing the predetermined volume of inoculated culture to flow from the first container through the horizontally disposed conduit and into the second container having sterile culture therein.

Official Gazette of the U.S. Patent Office

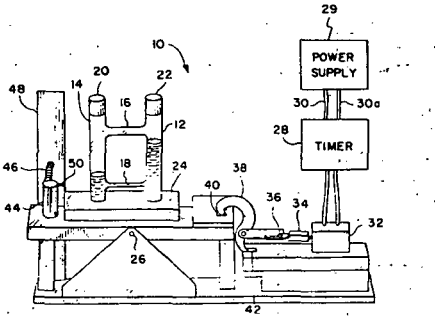

N75-27331* National Aeronautics and Space Administration. Goddard Space Flight Center, Greenbelt, Md.

IMPACT POSITION DETECTOR FOR OUTER SPACE PARTICLES Patent

Siegfried O. Auer, inventor (to NASA) (NAS-NRC) Issued 24 Jun. 1975 12 p Filed 30 Aug. 1974 Supersedes N74-32886 (12 - 22, p 2694) Sponsored by NASA

(NASA-Case-GSC-11829-1; US-Patent-3,891,851; US-Patent-Appl-SN-502136; US-Patent-Class-250-385) Avail: US Patent Office CSCL 14B

The impact position of cosmic dust, micrometeoroids and other similar outer space particles is detected with an array including a multiplicity of mutually insulated, metal electrode strips, a first group of which has parallel, longitudinal axes at right angles to a second group of the strips. Also provided is a delay line having a multiplicity of taps, each of which is connected to one of the strips. The delay times between adjacent taps of the delay line are approximately the same. One end of the delay line is terminated with a resistor having a value substantially equal to the characteristic impedance of the delay line. The

arrival time at a delay line output terminal of pulses induced in the delay line in response to particle impact is determined relative to the occurrence time of a further pulse derived in response to the impact. Circuitry is provided to separate pulses induced in the line from different strips, evan though there are substantially simultaneous impacts on the different strips.

Official Gazette of the U.S. Patent Office

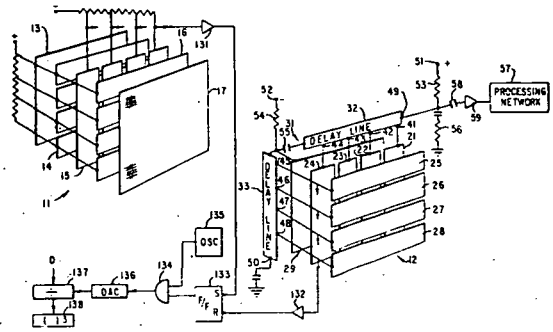

N75-27334*# National Aeronautics and Space Administration. Langley Research Center, Langley Station, Va.

INSTRUMENTATION FOR MEASURING AIRCRAFT NOISE AND SONIC BOOM Patent Application

Allan J. Zukerwar, inventor (to NASA) (Old Dominion Univ.) Filed 1 Jul. 1975 17 p

(Contract NAS1-11707)

(NASA-Case-LAR-11476-1; US-Patent-Appl-SN-592159) Avail: NTIS HC $3.25 CSCL 14B

Improvements in instrumentation suitable for measuring aircraft noise and sonic booms are reported. A converter produces an electric current proportional to the sound pressure level at a condenser microphone. The electric current is transmitted over a cable and amplified by a zero drive amplifier. The converter consists of a local oscillator, a dual gate field effect transistor (FET) mixer and a voltage regulator/impedance translator. The local oscillator generates a carrier voltage that is applied to one of the gates of the FET mixer. The FET mixer mixes the microphone signal with the carrier to produce an electrical current at the frequency of vibration of the microphone diaphragm. The voltage regulator/impedance translator regulates the voltage of the local oscillator and mixer stages, eliminates the carrier at the output, and provides a low output impedance at the cable terminals. The improvements include automatic tuning compensation against changes in static microphone capacitance and means for providing a remote electrical calibration capability. NASA

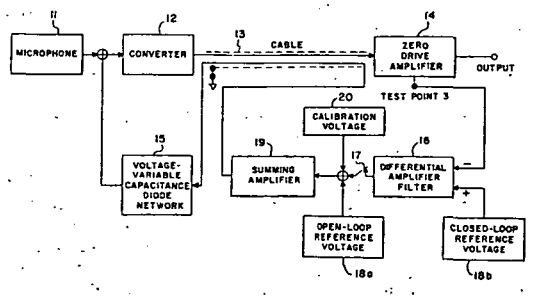

N75-29380* National Aeronautics and Space Administration. Marshall Space Flight Center, Huntsville, Ala.

CARBON MONOXIDE MONITOR Patent

Robert J. Naumann, inventor (to NASA) Issued 22 Jul. 1975 6 p Filed 6 Nov. 1974 Supersedes N75-10414 (13 - 01, p 0055)

(NASA-Case-MFS-22060-1; US-Patent-3,895,912; US-Patent-Appl-SN-521603; US-Patent-Class-23-255E; US-Patent-Class-23-254E; US-Patent-Class-73-23; US-Patent-Class-311-37; US-Patent-Class-331-65) Avail: US Patent Office CSCL 14B

A device is described for automatic, real time monitoring of carbon monoxide and for providing a continuous read out of the concentration of carbon monoxide. The monitoring device includes two Y-cut, temperature sensitive quartz crystals which are encapsulated in a helium filled can. One of the cans containing a quartz crystal is surrounded by a wire mesh which carries a thin layer of hopcalite coating. The hopcalite is used for oxidizing the carbon monoxide, and the resulting heat of the reaction is detected by the temperature sensitive crystal. Each crystal is driven by a conventional crystal controlled oscillator circuit with a constant frequency bias of a few hundred Hz. The frequencies of the two oscillator circuits are fed into a conventional mixer circuit which beats the frequencies together and produces a single net frequency which is the difference between the two frequencies. The net frequency signal is converted to a dc analog voltage signal which is then fed into a suitable display device.

Official Gazette of the U.S. Patent Office

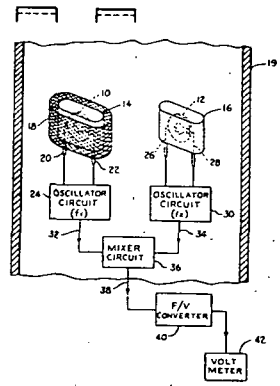

N75-29381* National Aeronautics and Space Administration. Ames Research Center, Moffett Field, Calif.

G-LOAD MEASURING AND INDICATOR APPARATUS Patent

James C. Howard, inventor (to NASA) Issued 22 Jul. 1975 11 p Filed 12 Jun. 1974

(NASA-Case-ARC-10806-1; US-Patent-3,895,521; US-Patent-Appl-SN-478802; US-Patent-Class-73-178R) Avail: US Patent Office CSCL 14B

A g-load measuring apparatus for facilitating pilot control of g-load during maneuvering and to provide an indication of g-load constraint violations is proposed. The apparatus includes processing means for receiving the components of the linear acceleration and angular velocity of the aircraft and for generating the first output signal indicative of the critical velocity of the aircraft and a second output signal indicative of the instantaneous maneuvering velocity of the aircraft. Indicating means are connected to the processing means for receiving the two output generated signals such that the relative magnitude of

the two signals is compared to provide an indication of the relative freedom of maneuverability of the aircraft and/or any g-load constraint violation that might exist.
Official Gazette of the U.S. Patent Office

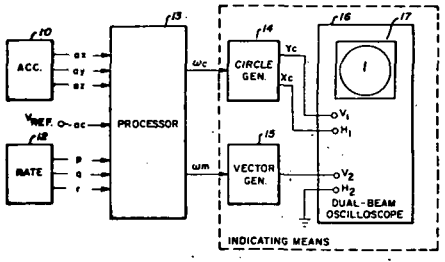

N75-29382* National Aeronautics and Space Administration. Lyndon B. Johnson Space Center, Houston, Tex.
THRUST MEASUREMENT Patent
Robert W. Postma, inventor (to NASA) (Rocketdyne, Canoga Park, Calif.) Issued 2 Apr. 1968 5 p Filed 19 Mar. 1965 Sponsored by NASA
(NASA-Case-XMS-05731; US-Patent-3,375,712; US-Patent-Appl-SN-441279; US-Patent-Class-73-117.4) Avail: US Patent Office CSCL 14B

A rocket engine thrust measuring transducer having an accelerometer coupled to a steady state load sensor is described. The signals from the accelerometer that primarily measure the start and stop load transients and the signals from the load sensor that primarily measure the steady state load transients are summed to constitute a signal that is indicative of thrust measurement. Official Gazette of the U.S. Patent Office

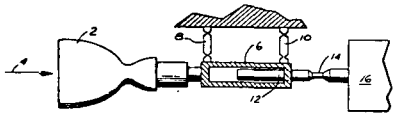

N75-29383*# National Aeronautics and Space Administration. Pasadena Office, Calif.
METHOD AND APPARATUS FOR BACKGROUND SIGNAL REDUCTION IN OPTO-ACOUSTIC ABSORPTION MEASUREMENT Patent Application
Lars-Goran Rosengren, inventor (to NASA) (JPL) Filed 25 Jul. 1975 11 p
(Contract NAS7-100)
(NASA-Case-NPO-13683-1; US-Patent-Appl-SN-599284) Avail: NTIS HC $3.25 CSCL 14B

A procedure is reported for increasing the sensitivity of an opto-acoustic absorption detector in order to measure trace amounts of constituent gases in a sample. The procedure involves creating a second beam radiation path through the sample cell identical to a first beam except for the length, alternating the beam through the two paths, and minimizing the detected pressure difference for the two paths while the beam wavelength is tuned away from the absorption lines of the sample. Then with the beam wavelength tuned to the absorption line of any constituent of interest, the pressure difference is a measure of trace amounts of the constituent. The same detector may also be used for measuring the absorption coefficient of known concentrations of absorbing gases. NASA

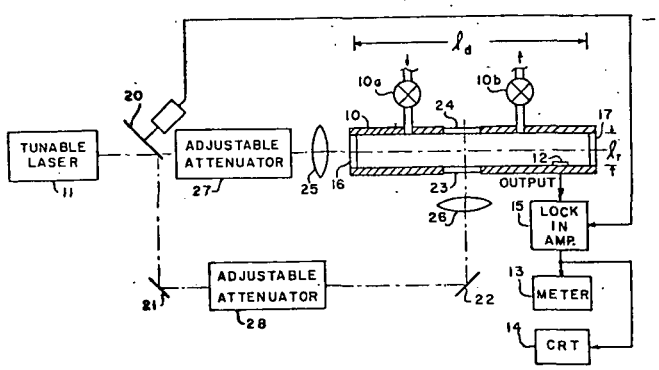

N75-30502* National Aeronautics and Space Administration. Ames Research Center, Moffett Field, Calif.
NDIR GAS ANALYZER BASED ON ABSORPTION MODULATION RATIOS FOR KNOWN AND UNKNOWN SAMPLES *Patent*
John Dimeff, inventor (to NASA) Issued 12 Aug. 1975 10 p Filed 28 Jun. 1974 Supersedes N74-28933 (12 - 18, p 2174)
(NASA-Case-ARC-10802-1; US-Patent-3,899,252; US-Patent-Appl-SN-484208; US-Patent-Class-356-51; US-Patent-Class-205-343; US-Patent-Class-250-351; US-Patent-Class-250-373) Avail: US Patent Office CSCL 14B

A nondispersive gas analyzer is described. The analyzer is provided with means responsive to the fluctuating intensity of radiation passed through a density modulated known and unknown gas sample for generating a signal containing the frequency modulation of the samples. Included in the signal generation is a means for selectively amplifying those components directly related to the frequency of modulation of the known and unknown samples and a means for forming a ratio of said components for generating a signal proportional to the density of the known gas in the unknown gas sample.
Official Gazette of the U.S. Patent Office

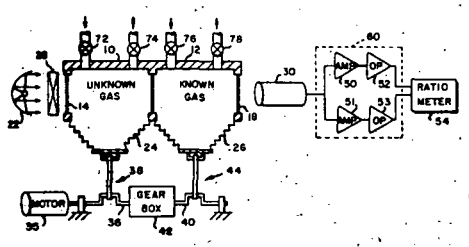

N75-30503* National Aeronautics and Space Administration. Lewis Research Center, Cleveland, Ohio.
FLOW MEASURING APPARATUS Patent
Paul R. Prokopius, inventor (to NASA) Issued 12 Aug. 1975 8 p Filed 28 Feb. 1974 Supersedes N74-18101 (12 - 09, p 1050)
(NASA-Case-LEW-12078-1; US-Patent-3,898,882; US-Patent-Appl-SN-447124; US-Patent-Class-73-194M; US-Patent-Class-73-195) Avail: US Patent Office CSCL 14B

Apparatus for measuring the mass flow rates of the components comprising a binary gas mixture is provided. This is accomplished by directing a binary fluid or gas through a fluidic humidity sensor and then through a calorimeter which increases the temperature of the flowing binary gas. Electrical signals provided by the fluidic humidity sensor, the flow calorimeter, and a power supply which energizes or heats the calorimeter are operated in a predetermined manner to provide an output signal indicative of the mass flow rate of one of the binary gases. Thus, the mass flow rate of the other gas is allowed to be determined since the total mass flow rate is previously calculated by the instrument and is the output of operating module 19. Official Gazette of the U.S. Patent Office

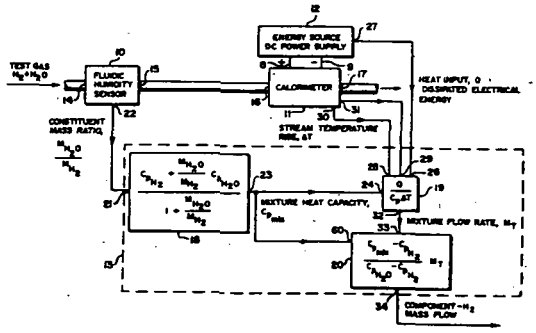

N75-30504* National Aeronautics and Space Administration. Lyndon B. Johnson Space Center, Houston, Tex.
FAULT TOLERANT CLOCK APPARATUS UTILIZING A CONTROLLED MINORITY OF CLOCK ELEMENTS Patent
William M. Daly (MIT, Cambridge) and John F. McKenna, Jr., inventors (to NASA) (MIT, Cambridge) Issued 19 Aug. 1975 10 p Filed 26 Apr. 1973 Supersedes N73-22386 (11 - 13, p 1528) Sponsored by NASA
(NASA-Case-MSC-12531-1; US-Patent-3,900,741; US-Patent-Appl-SN-354612; US-Patent-Class-307-204; US-Patent-Class-307-211; US-Patent-Class-307-219; US-Patent-Class-328-61; US-Patent-Class-328-62) Avail: US Patent Office CSCL 14B

A fault-tolerant clock apparatus is presented for use in digital logic systems. The apparatus maintains output pulses during component failures. Official Gazette of the U.S. Patent Office

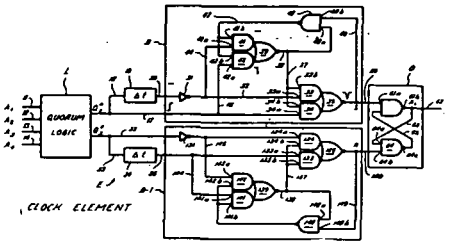

N75-30516*# National Aeronautics and Space Administration. Langley Research Center, Langley Station, Va.
BINOCULAR ATTACHMENT Patent Application
William H. King, inventor (to NASA) Filed 28 Aug. 1975 9 p
(NASA-Case-LAR-11782-1; US-Patent-Appl-SN-608482) Avail: NTIS HC $3.25 CSCL 14B

Apparatus for superimposing numerical information on the field of view of binoculars and applicable in the flying of radio-controlled model airplanes is described. Airspeed and angle of attack are sensed by sensors attached to the model airplane, telemetered to ground, and converted to numerical form. An optical system is used to display the numerical information in the field of view of the binoculars used to track the model airplane. The numerical information is focused at infinity by collimating lens enabling the user to see the object and numerical information without refocussing his eyes. NASA

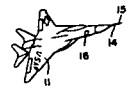

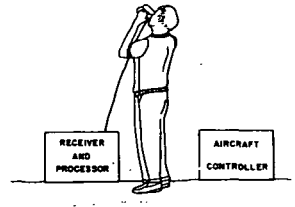

N75-31418*# National Aeronautics and Space Administration. Marshall Space Flight Center, Huntsville, Ala.
METHOD OF AND MEANS FOR TESTING A TAPE RECORD/PLAYBACK SYSTEM Patent Application
Gabriel R. Wallace, William E. Salter (Sperry Rand Corp., Huntsville, Ala.), Glenn D. Weathers (Sperry Rand Corp., Huntsville, Ala.), and Sidney S. Gussow, inventors (to NASA) (Sperry Rand Corp., Huntsville, Ala.) Filed 25 Mar. 1975 18 p
(Contract NAS8-21812)
(NASA-Case-MFS-22671-2; US-Patent-Appl-SN-561956) Avail: NTIS HC $3.25 CSCL 14B

A test set for communications systems is described which includes a pseudo-noise sequence generator providing a test signal that is fed to a pair of signal channels. The first channel includes a spectrum shaping filter and a conditioning amplifier. The second channel includes a variable delay circuit, a spectrum shaping filter matched to the first filter, and an amplifier. The output of the first channel is applied to the system under test. The output of the system and the output of the second channel are compared to determine the degree of distortion suffered by the test signal due to the communications system. NASA

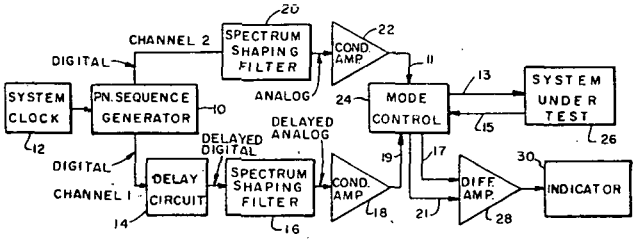

N75-32426*# National Aeronautics and Space Administration. Ames Research Center, Moffett Field, Calif.

METALLIC HOT WIRE ANEMOMETER AND METHOD FOR FABRICATING THE SAME Patent Application

Fred R. Lemos, inventor (to NASA) Filed 5 Sep. 1975 13 p (NASA-Case-ARC-10911-1; US-Patent-Appl-SN-610802) Avail: NTIS HC $3.25 CSCL 14B

A hot wire anemometer is described which has a body formed of heat resistant metal such as an alloy very high in nickel content. The body supports a probe wire in a moving air stream and is mechanically arranged so that the probe wire is disposed in a V groove in the body; the V groove contains a high temperature ceramic adhesive that partially encompasses the downstream side of the probe wire. Mechanical and electrical connection to the probe wire is achieved through conductive support rods which were constructed of the same high temperature metal, insulation between the body and the conductor rods being provided by an oxide coating. The oxide coating insulates the conductor rods from the body, mechanically fixes the conductors within the body, and maintains its integrity at elevated temperatures to which a hot wire anemometer is typically subjected. A method for forming the anemometer structure is included which employs conventional machining procedures combined in a novel sequence. NASA

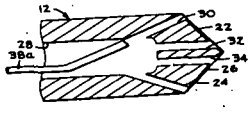

N75-33367* National Aeronautics and Space Administration. Langley Research Center, Langley Station, Va.

METEOROID IMPACT POSITION LOCATOR AID FOR MANNED SPACE STATION Patent

John D. DiBattista, inventor (to NASA) Issued 29 Jul. 1975 10 p Filed 2 Oct. 1973 Supersedes N73-32348 (11 - 23, p 2793)
(NASA-Case-LAR-10629-1; US-Patent-3,896,758; US-Patent-Appl-SN-402867; US-Patent-Class-116-114AH; US-Patent-Class-73-12; US-Patent-Class-73-170R; US-Patent-Class-73-432PS) Avail: US Patent Office CSCL 14B

Meteoroid impacts in space vehicles are located by coating the metallic interior wall of the space vehicle with a thin layer of a coating material having contrasting color to that of the vehicle interior wall. The coating is capable of flaking or chipping off when an impacting meteoroid deforms said wall. Official Gazette of the U.S. Patent Office

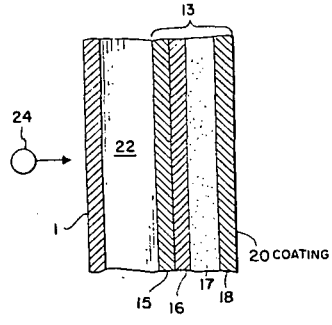

N75-33368* National Aeronautics and Space Administration. Langley Research Center, Langley Station, Va.

MEASUREMENT OF GAS PRODUCTION OF MICROORGANISMS Patent

Judd R. Wilkins, Albin O. Pearson, and Stacey M. Mills, inventors (to NASA) Issued 23 Sep. 1975 20 p Filed 24 Jul. 1974 Supersedes N74-32518 (12 - 22, p 2647)
(NASA-Case-LAR-11326-1; US-Patent-3,907,646; US-Patent-Appl-SN-491416; US-Patent-Class-195-103.5R) Avail: US Patent Office CSCL 14B

A simple apparatus and method is disclosed for measuring gas production by microorganisms using a pressure transducer to sense pressure buildup by members of the Enterobacteriaceae group of bacteria. The test system consists of a 5.0 psid pressure transducer and a pressure equalizer valve attached to the metal cap of a 20 x 150 mm test tube. Gas pressure is recorded on a strip-chart recorder. Official Gazette of the U.S. Patent Office

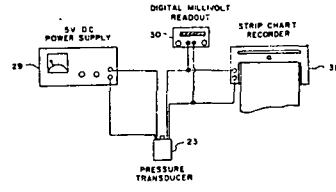

N75-33369* National Aeronautics and Space Administration. Langley Research Center, Langley Station, Va.
SELF-SUPPORTING STRAIN TRANSDUCER Patent
Ira S. Hoffman, inventor (to NASA) Issued 23 Sep. 1975 11 p Filed 23 May 1974 Supersedes N74-25931 (12 - 15, p 1790)
(NASA-Case-LAR-11263-1; US-Patent-3,906,788; US-Patent-Appl-SN-472775; US-Patent-Class-73-141A) Avail: US Patent Office CSCL 14B

A strain transducer is described for use in the measurement of static or quasi-static high strain levels at stress concentration points in holes in flat plates. Cantilever springs constructed by machining the material to appropriate flexibility, permit self-alinement, and constant contact with the test specimen. Used in conjunction with a strain gage or other transducer, it enables testing far beyond the strain gage's normal limits for high strains and number of load cycles.

Official Gazette of the U.S. Patent Office

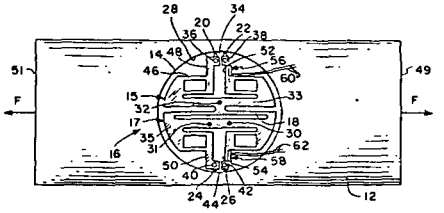

N75-33370*# National Aeronautics and Space Administration. Langley Research Center, Langley Station, Va.
MAGNETOMETER Patent Application
W. J. Debnam, Jr., C. L. Fales, R. A. Breckenridge, and A. V. Pohm, inventors (to NASA) (Iowa State Univ. of Sci. and Technol.) Filed 4 Feb. 1975 15 p
(NASA-Case-LAR-11617-1; US-Patent-Appl-SN-547072) Avail: NTIS HC $3.25 CSCL 14B

A magnetometer with a miniature transducer is described which can be scanned automatically. The magnetometer includes a transducer that has an active region of approximately 0.64 mm x 0.76 mm and is capable of good spatial resolution of magnetic fields as low as 0.02 oe. The magnetometer employs an automatic transducer scanning technique; it has a transducer which is rugged and flat and can measure magnetic fields as close as 0.08 mm from any relatively flat surface. The magnetometer was used to provide an external means of determining the presence of magnetic remanence in the magnetic word strap keepers on memory planes of experimental and production line plated-wire memories, and to provide measurements of the transverse magnetic field components at the surface of geological rock specimens. NASA

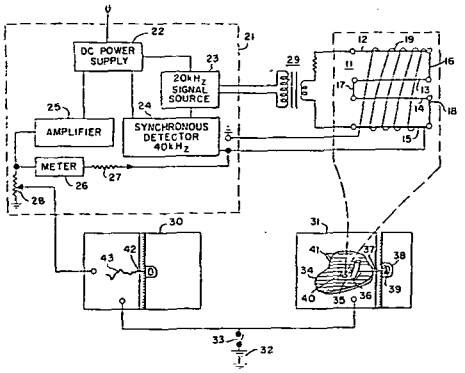

36 LASERS AND MASERS

Includes parametric amplifiers.

N75-27364* National Aeronautics and Space Administration. Lewis Research Center, Cleveland, Ohio.
HIGH POWER LASER APPARATUS AND SYSTEM Patent
John C. Evans, Jr. and Henry W. Brandhorst, Jr., inventors (to NASA) Issued 8 Jul. 1975 7 p Filed 29 Jul. 1968
(NASA-Case-XLE-2529-2; US-Patent-3,894,289; US-Patent-Appl-SN-848403; US-Patent-Class-330-4.3; US-Patent-Class-331-94.5A; US-Patent-Class-240-41B) Avail: NTIS HC $3.25 CSCL 20E

A high-power, continuous-wave laser was designed for use in power transmission and energy-collecting systems, and for producing incoherent light for pumping a laser material. The laser has a high repetitive pulsing rate per unit time, resulting in a high-power density beam. The laser is composed of xenon flash tubes powered by fast-charging capacitors flashed in succession by a high-speed motor connected to an automobile-type distributor.

L.B.

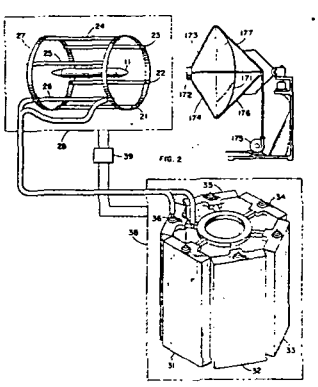

N75-30524* National Aeronautics and Space Administration. Pasadena Office, Calif.
ELECTRIC POWER GENERATION SYSTEM DIRECTORY FROM LASER POWER Patent
Katsunori Shimada, inventor (to NASA) (JPL) Issued 12 Aug. 1975 7 p Filed 27 Mar. 1974 Supersedes N74-19702 (12 - 11, p 1250) Sponsored by NASA
(NASA-Case-NPO-13308-1; US-Patent-3,899,696; US-Patent-Appl-SN-455165; US-Patent-Class-310-4; US-Patent-Class-331-DIG.1) Avail: US Patent Office CSCL 20E

A pool of liquid cesium is spaced apart from a collector in an enclosed vessel. A laser beam is directed to the liquid cesium pool. The beam is focused to provide sufficient laser power density at the liquid cesium surface to vaporize some of the liquid cesium and ionize the vaporized cesium, and thereby form cesium ions and free electrons. The work function of the collector is different from that of cesium. When the work function is higher, the formed ions are attracted to the collector, and the electrons are attracted by the liquid cesium. Electrons and ions are attracted by the collector and liquid cesium respectively when the work

function of the collector is less than that of cesium. Thus, a potential difference is generated by the liquid cesium pool and the collector, sufficient to apply electric power to a load.
Official Gazette of the U.S. Patent Office

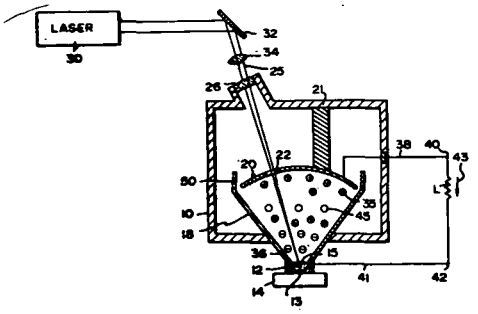

N75-31426* National Aeronautics and Space Administration. Ames Research Center, Moffett Field, Calif.
DIATOMIC INFRARED GASDYNAMIC LASER Patent
Robert L. McKenzie, inventor (to NASA) Issued 16 Sep. 1975 9 p Filed 26 Apr. 1971 Supersedes N72-10432 (10 - 01, p 0063)
(NASA-Case-ARC-10370-1; US-Patent-3,906,397; US-Patent-Appl-SN-137391; US-Patent-Class-331-94.5G; US-Patent-Class-331-94.5P) Avail: US Patent Office CSCL 20E

A gasdynamic laser which utilizes the infrared vibration-rotation transitions of a diatomic gas such, as carbon monoxide, is reported.
Official Gazette of the U.S. Patent Office

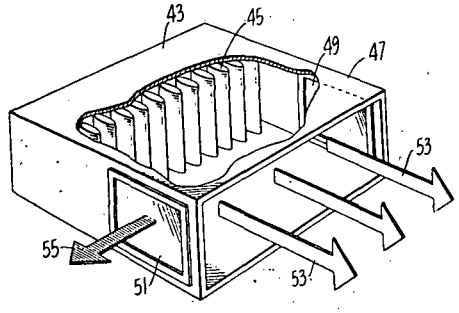

N75-31427* National Aeronautics and Space Administration. Pasadena Office, Calif.
ACOUSTICALLY CONTROLLED DISTRIBUTED FEEDBACK LASER Patent
Charles Elachi, inventor (to NASA) (JPL) Issued 16 Sep. 1975 8 p Filed 28 Jun. 1973 Supersedes N73-27431 (11 - 18, p 2157) Sponsored by NASA
(NASA-Case-NPO-13175-1; US-Patent-3,906,393; US-Patent-Appl-SN-374423; US-Patent-Class-331-94.5C; US-Patent-Class-350-96WG; US-Patent-Class-350-161) Avail: US Patent Office CSCL 20E

A distributed feedback laser that is capable of being continuously tuned and/or scanned is disclosed. The laser is capable of being operated in a continuous wave mode as well as a pulsed mode. A lasing medium and an acoustic transducer are mounted on a substrate to have acoustic waves produce periodic mechanical distortions of the lasing medium to cause corresponding periodic disturbances of the index of refraction of said lasing material. Conventional means of excitation of the lasing medium such as by electron bombardment, laser illumination, and application of electrical current, may be used.
Official Gazette of the U.S. Patent Office

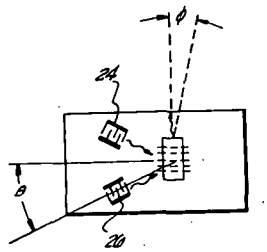

N75-32441* National Aeronautics and Space Administration. Pasadena Office, Calif.
INERT GAS METALLIC VAPOR LASER Patent
Gary R. Russell (JPL), Noble M. Nerheim (JPL), and Thomas J. Pivirotto, inventors (to NASA) (JPL) Issued 16 Sep. 1975 23 p Filed 3 Dec. 1973 Supersedes N74-16187 (12 - 07, p 0804) Sponsored by NASA
(NASA-Case-NPO-13449-1; US-Patent-3,906,398; US-Patent-Appl-SN-420813; US-Patent-Class-331-94-5G; US-Patent-Class-330-4.3; US-Patent-Class-310-11; US-Patent-Class-331-94.5PE) Avail: US Patent Office CSCL 20E

An inert gas-copper vapor laser is described which consists of a multichamber structure, in which inert gases are heated and mixed with copper powder which is then vaporized, and an inert gas-copper vapor mixture is established in a plenum chamber. The inert gas copper vapor mixture, referred to as the lasant, passes from the plenum chamber through a nozzle into a laser chamber. Positioned in the laser chamber are a pair of spaced apart mirrors and a pair of spaced apart electrodes which together form a cylindrical laser cavity through which the lasant flows. One or both electrodes are comb-shaped. Each comb-shaped electrode consists of a plurality of equal length wires, all of which are connected together at a common terminal. The ends of the wires define tips which are equally spaced apart in a direction parallel to the cavity axis and are equally spaced therefrom. Current discharge due to a current pulse applied to the electrodes takes place at the wires tips. Each electrode is protected by a boron nitride electrode protective member which is slotted so that only the tips of the wires are exposed to the opposite electrode and to the hot plasma flowing between the electrodes through the laser cavity.
Official Gazette of the U.S. Patent Office

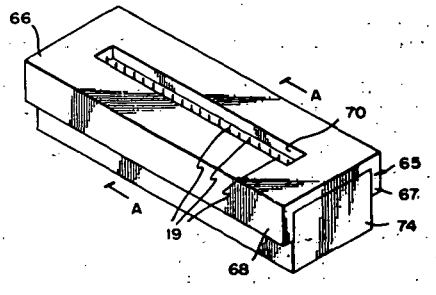

37 MECHANICAL ENGINEERING

Includes auxiliary systems (non-power); machine elements and processes; and mechanical equipment.

N75-21631* National Aeronautics and Space Administration. Lewis Research Center, Cleveland, Ohio.
HIGH SPEED, SELF-ACTING SHAFT SEAL Patent
Lawrence P. Ludwig and William F. Hady, inventors (to NASA) Issued 1 Apr. 1975 6 p Filed 19 Jul. 1973 Supersedes N73-29457 (11 - 20, p 2422)
(NASA-Case-LEW-11274-1; US-Patent-3,874,677; US-Patent-Appl-SN-380630; US-Patent-Class-277-27; US-Patent-Class-277-40; US-Patent-Class-277-134) Avail: US Patent Office CSCL 11A

A high-speed, self-acting circumferential type shaft seal for use in turbine engines is disclosed. One or more conventional circumferential ring seals having a central aperture are mounted in a housing. In three of the four embodiments of the invention, a helical groove and one or more dam seals are cut in the inner cylindrical surface of the one or more ring seals. In a fourth embodiment, two or more lift pads are disposed in surface contact with the inner cylindrical surface of the seal rings. To the outside of the lift pads, two dam seals are cut in the inner cylindrical surface of two of the ring seals. In each of the embodiments, a net outward radial force was produced during rotation of the turbine causing the ring seals to lift out of contact with the turbine shaft to minimize wear of the ring seals.
Official Gazette of the U.S. Patent Office

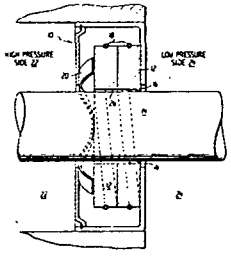

N75-21637*# National Aeronautics and Space Administration. Pasadena Office, Calif.
FABRICATION OF HOLLOW ELASTOMERIC BODIES Patent Application
Howard F. Broyles (JPL), Jovan Moacanin (JPL), and Edward F. Cuddihy, inventors (to NASA) (JPL) Filed 28 Mar. 1975 14 p (Contract NAS7-100)
(NASA-Case-NPO-13535-1; US-Patent-Appl-SN-563050) Avail: NTIS HC $3.25 CSCL 13K

Annular elastomeric bodies having intricate shapes are cast by dipping a heated, rotating mandrel into a solution of the elastomer. The elastomer is premitted to creep into sharp recesses, drying the coated mandrel and repeating the operation until the desired thickness was achieved. A bladder for a heart assist pump in which cylindrical body terminating in flat, sharp horizontal flanges was subjected to over 2,500 hours of simulated life conditions with no visible signs of degradation. NASA

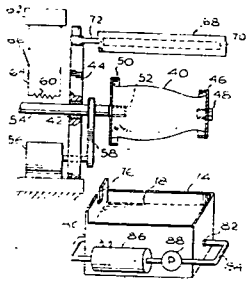

N75-22746*# National Aeronautics and Space Administration. Pasadena Office, Calif.
SOLAR POWERED PUMP Patent Application
Charles C. Kirsten, inventor (to NASA) (JPL) Filed 9 Apr. 1975 19 p
(Contract NAS7-100)
(NASA-Case-NPO-13567-1; US-Patent-Appl-SN-566493) Avail: NTIS HC $3.25 CSCL 13I

A low cost water pump suitable for use in agricultural irrigation in underdeveloped regions is disclosed. The pump is adopted to use unconcentrated sunlight as a source of energy and atmospheric air as a working fluid for intermittently delivering a stream of water from a given source. NASA

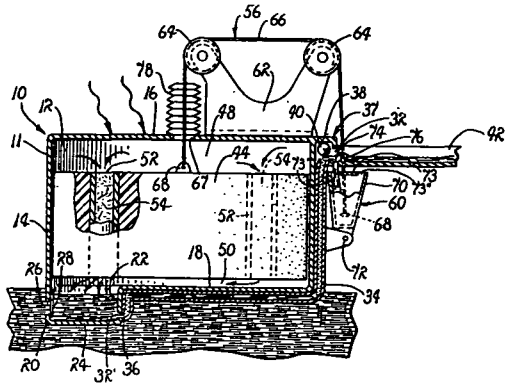

N75-22747*# National Aeronautics and Space Administration. Pasadena Office, Calif.
STIRLING CYCLE ENGINE AND REFRIGERATION SYSTEMS Patent Application
Walter H. Higa, inventor (to NASA) (JPL) Filed 5 May 1975 23 p
(Contract NAS7-100)
(NASA-Case-NPO-13613-1; US-Patent-Appl-SN-574208) Avail: NTIS HC $3.25 CSCL 13I

A Stirling cycle heat engine is described in which displacer motion is controlled as a function of the working fluid pressure and a substantially constant pressure. The heat engine includes an auxiliary chamber at the constant pressure, and an end surface of a displacer-piston is disposed in the auxiliary chamber. During the compression portion of the engine cycle when the fluid pressure rises above the constant pressure, the displacer forces the working fluid to pass from the cold chamber to the hot chamber of the engine. During the expansion portion of the engine cycle the heated working fluid in the hot chamber does work by pushing down on the engine's drive piston. As the working fluid pressure drops below the constant pressure, the displacer forces most of the working fluid in the hot chamber to pass through the regenerator to the cold chamber. The engine is easily combinable with a refrigeration section to provide a refrigeration system in which the engine's single drive piston serves both the engine and the refrigeration section. NASA

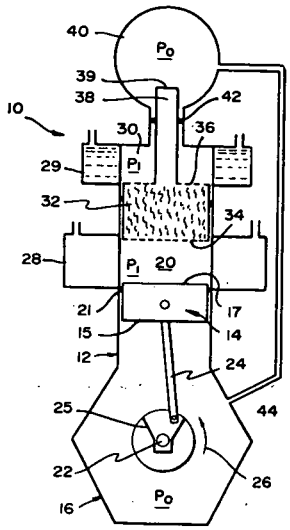

N75-22748*# National Aeronautics and Space Administration. Pasadena Office, Calif.
MOTION RESTRAINING DEVICE Patent Application
Allen G. Ford, inventor (to NASA) (JPL) Filed 30 Apr. 1975 18 p
(Contract NAS7-100)
(NASA-Case-NPO-13619-1; US-Patent-Appl-SN-572990) Avail: NTIS HC $3.25 CSCL 13I

A motion-restraining device for dissipating at a controlled rate, the force of a moving body was developed. The device is characterized by a drive shaft adapted to be driven in rotation by a moving body and employs a three-stage motion-multiplying gear train. The force of a moving body may be without resorting to the use of conventional motion-control devices such as escape wheels, two arm pallets, and comparable components. NASA

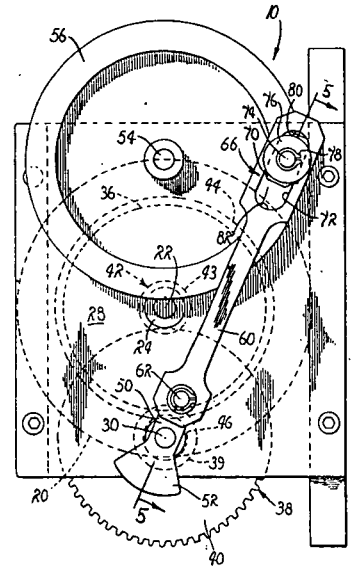

N75-25185* National Aeronautics and Space Administration. Pasadena Office, Calif.
ULTRASONICALLY BONDED VALUE ASSEMBLY Patent
Richard J. Salvinski, inventor (to NASA) (TRW Systems Group, Redondo Beach, Calif.) Issued 1 Apr. 1975 7 p Filed 28 Sep. 1973 Supersedes N74-20073 (12 - 11, p 1298) Sponsored by NASA
(NASA-Case-NPO-13360-1; US-Patent-3,874,635;
US-Patent-Appl-SN-401920; US-Patent-Class-251-333;
US-Patent-Class-228-1) Avail: US Patent Office CSCL 13G

A valve apparatus capable of maintaining a fluid-tight seal over a relatively long period of time by releasably bonding a valve member to its seat is described. The valve member is bonded or welded to the seat and then released by the application of the same energy to the bond joint. The valve member is held in place during the bonding by a clamping device. An appropriate force device can activate the opening and closing of the valve member. Various combinations of material for the valve member and valve seat can be utilized to provide an adequate sealing bond. Aluminum oxide, stainless steel, inconel, tungsten carbide as hard materials and copper, aluminum, titanium, silver, and gold as soft materials are suggested.
Official Gazette of the U.S. Patent Office

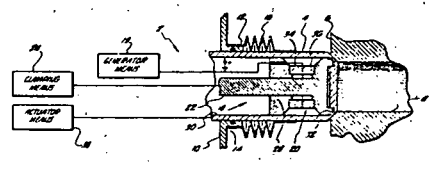

N75-25186* National Aeronautics and Space Administration. Marshall Space Flight Center, Huntsville, Ala.

HOLE CUTTER Patent

George E. Thornton and Danvis T. Newby, inventors (to NASA) Issued 15 Apr. 1975 5 p Filed 19 Sep. 1973 Supersedes N73-32376 (11 - 23, p 2797)

(NASA-Case-MFS-22649-1; US-Patent-3,877,833; US-Patent-Appl-SN-398901; US-Patent-Class-408-186; US-Patent-Class-408-112; US-Patent-Class-408-193; US-Patent-Class-408-195) Avail: US Patent Office CSCL 13I

An adjustable hole cutter is described for use in forming circular openings in workpieces. The hole cutter is characterized by a mount of a substantially planar configuration, positionable into a plane paralleling the working plane of a selected workpiece. It also contains a shaft for imparting rotary motion to the mount about an axis of rotation normally related to the working plane, a plurality of stabilizing struts for resiliently supporting the mount in parallelism with the working plane as rotary motion is imparted thereto, a drill bit for drilling a pilot hole concentric with the axis of rotation, and an elongated cutting tool adjustably seated within a radially extended slot.

Official Gazette of the U.S. Patent Office

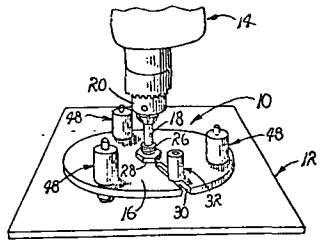

N75-26371* National Aeronautics and Space Administration. Goddard Space Flight Center, Greenbelt, Md.

PROCESS FOR MAKING SHEETS WITH PARALLEL PORES OF UNIFORM SIZE Patent

Joseph M. Sherfey, inventor (to NASA) Issued 3 Jun. 1975 8 p Filed 24 Mar. 1971 Supersedes N71-34427 (09-21, p 3433)

(NASA-Case-GSC-10984-1; US-Patent-3,887,365; US-Patent-Appl-SN-127480; US-Patent-Class-75-214; US-Patent-Class-29-182.2; US-Patent-Class-29-182.5; US-Patent-Class-29-420.5; US-Patent-Class-65-3; US-Patent-Class-75-200; US-Patent-Class-75-208R; US-Patent-Class-75-212; US-Patent-Class-75-222; US-Patent-Class-75-DIG.1; US-Patent-Class-161-92; US-Patent-Class-161-93; US-Patent-CLASS-117-126R; US-Patent-Class-117-126GM) Avail: US Patent Office CSCL 13H

Processes for making sheets with parallel pores of uniform size are described. In one form, the process comprises the steps of: extruding a slurry formed of short, nonmetallic filament pieces, a metal powder, water, and a plasticizer through a suitable orifice to align the filament pieces parallel to one another; cutting the extrusion into suitable sections; stacking the sections in parallel in a refractory container; compacting the stack; heating the stack in a reducing atmosphere; compacting while hot, if necessary; slicing, at right angles to the longitudinal axis of the original sections, the thusly formed billet into sheets; and leaching out the filament pieces in each sheet. In a alternate form, a continuous filament was used. The continuous filament is drawn through a slurry containing metal powder which may include a solder, water and a plasticizer rather than being extruded through an orifice. In a still further form, the continuous coated filament is wound onto a suitably shaped spool.

Official Gazette of the U.S. Patent Office

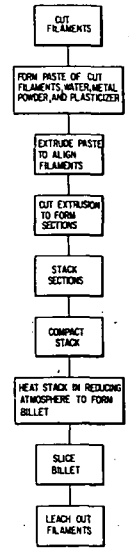

N75-26372* National Aeronautics and Space Administration. Marshall Space Flight Center, Huntsville, Ala.

METHOD OF DETERMINING BOND QUALITY OF POWER TRANSISTORS ATTACHED TO SUBSTRATES Patent

Thomas A. Telfer, inventor (to NASA) (GE, Utica, N. Y.) Issued 10 Jun. 1975 4 p Filed 26 Apr. 1974 Supersedes N74-21858 (12- 13, p 1527) Sponsored by NASA

(NASA-Case-MFS-21931-1; US-Patent-3,889,122; US-Patent-Appl-SN-464721; US-Patent-Class-250-359; US-Patent-Class-250-460; US-Patent-Class-250-492) Avail: US Patent Office CSCL 13H

A method of determining the quality of the bond between a power transistor and an electrically insulative, heat conductive substrate is described; the method takes X ray exposure of the bond. In the exposures, the areas where the bond quality is poor show up as dark in relation to a lighter background area where the bond quality is good. The exposures are tested in a light meter device in which the average transparency of on exposure indicates the percentage of voids, or poorly bonded areas. Only those units having less than a predetermined percentage of voids are acceptable.

Official Gazette of the U.S. Patent Office

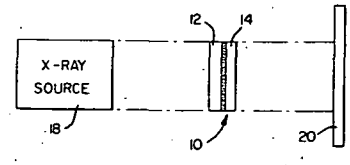

N75-26378*# National Aeronautics and Space Administration. Lewis Research Center, Cleveland, Ohio.
THRUST BEARING Patent Application
William J. Anderson, inventor (to NASA) Filed 25 Jun. 1975 13 p
(NASA-Case-LEW-11949-1; US-Patent-Appl-SN-590182) Avail: NTIS HC $3.25 CSCL 13I

A gas-lubricated thrust bearing is described which employs relatively rigid inwardly cantilevered spokes carrying a relatively resilient annular member or annulus. This annulus acts as a beam on which are mounted bearing pads. The resilience of the beam mount causes the pads to accept the load and, with proper design, responds to a rotating thrust-transmitting collar by creating a gas film between the pads and the thrust collar. The bearing may be arranged for load equalization thereby avoiding the necessity of gimbal mounts or the like for the bearing. It may also be arranged to respond to rotation in one or both directions. NASA

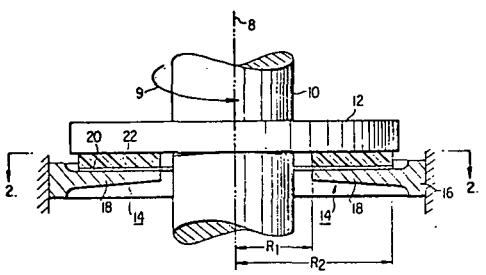

N75-27376* National Aeronautics and Space Administration. Lyndon B. Johnson Space Center, Houston, Tex.
APPARATUS FOR WELDING SHEET MATERIAL Patent
William Dubusker (McDonnell Aircraft Co., St. Louis), Frank S. Pogorzelski (McDonnell Aircraft Co., St. Louis), and Clem W. Fridrich, inventors (to NASA) (McDonnell Aircraft Co., St. Louis) Issued 27 Sep. 1966 7 p Filed 6 Nov. 1963 Continuation-in-part of US Patent Appl. SN-153624, filed 20 Nov. 1961 Sponsored by NASA
(NASA-Case-XMS-01330; US-Patent-3,275,794; US-Patent-Appl-SN-322565; US-Patent-Class-219-125; US-Patent-Appl-SN-153624) Avail: US Patent Office CSCL 13I

Welding apparatus for fusion butt welding adjacent edges of objects such as thin metal sheets is described. The members are supported during welding and are welded without filler material. Smooth and uniform thickness weld connections which are able to withstand pressures of the same order of magnitude as the unwelded members without rupturing, leaking, or otherwise deteriorating are produced. The weld connections are suitable for use with metals which are ordinarily very difficult to weld. The butt weld seams are less apt to be weakened by pitting and corrosion. Official Gazette of the U.S. Patent Office

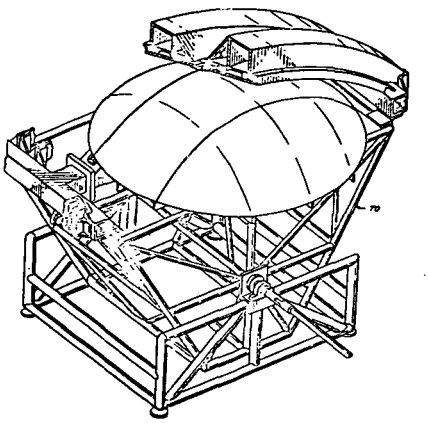

N75-27386*# National Aeronautics and Space Administration. Goddard Space Flight Center, Greenbelt, Md.
MAGNETIC BEARING SYSTEM Patent Application
Philip A. Studer, inventor (to NASA) Filed 3 Jul. 1975 29 p
(NASA-Case-GSC-11978-1; US-Patent-Appl-SN-593142) Avail: NTIS HC $3.75 CSCL 13I

A magnetic bearing system is described which includes a high magnetic permeability interior disc member that is symmetrical about a longitudinal z axis. An annular member of high magnetic permeability is coaxial with and surrounds the disc, but is mechanically free of it, being supported by magnetic flux originating in the disc and traversing an annular air gap between the members. Pole faces of the members are arranged so that maximum permeance in the air gap between them is in radial flux paths at right angles to the z axis and the annulus is supported in the z axis direction at the same position as the disc and at its angles to the z axis (in an x-y plane). The radial position of the annular member relative to the disc is controlled with electromagnet circuits that supply fluxes to diametrically opposed portions of the air gap between the disc and floating annulus. NASA

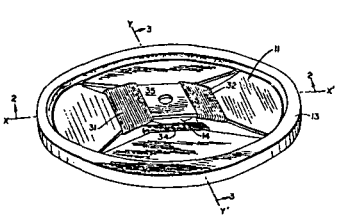

N76-29426* National Aeronautics and Space Administration. Lewis Research Center, Cleveland, Ohio.
COMBINATION AUTOMATIC-STARTING ELECTRICAL PLASMA TORCH AND GAS SHUTOFF VALVE Patent
Gabriel M. Giannini, inventor (to NASA) (Giannini Scientific Corp.) Issued 10 Oct. 1961 5 p Filed 5 Oct. 1959 Sponsored by NASA
(NASA-Case-XLE-10717; US-Patent-3,004,189; US-Patent-Appl-SN-844243; US-Patent-Class-315-111) Avail: US Patent Office CSCL 13K

A remote-operated combination plasma torch and shutoff valve is described which may be employed to control the attitude of a satellite and which is characterized by high efficiency and extreme gas economy. A satellite-propulsion apparatus is discussed of the type in which a multiplicity of bursts of power are employed to maintain the vessel oriented in space. It was adapted to prevent or minimize loss of propellant at the beginning and end of each power burst and to maintain the increased efficiency of the arc-jet propulsion system as compared to other propulsion systems. Official Gazette of the U.S. Patent Office

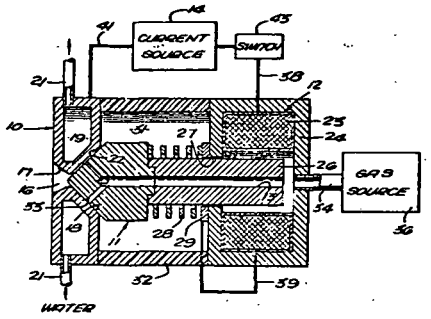

N75-29430*# National Aeronautics and Space Administration. Goddard Space Flight Center, Greenbelt, Md.
CYCLICAL BI-DIRECTIONAL ROTARY ACTUATOR Patent Application
William C. Stange, inventor (to NASA) Filed 17 Jul. 1975 21 p
(NASA-Case-GSC-11883-1; NASA-Case-GSC-11974-1; NASA-Case-GSC-11975-1; US-Patent-Appl-SN-596787) Avail: NTIS HC $3.25 CSCL 13I

A thermally powered rotary actuator is disclosed which is used for positioning a shaft in first and second positions which are disposed 180 deg apart. A pair of heat extensible springs are attached to the shaft and to the frame of the rotary actuator for selectively rotating the shaft from one of its two positions to the other position upon the application of heat to one of the heat extensible springs. The heat extensible springs are preferably constructed from the alloy 55-Nitinol. In the preferred embodiment, a detent mechanism is provided for locking the rotatable shaft in its two rotary positions. NASA

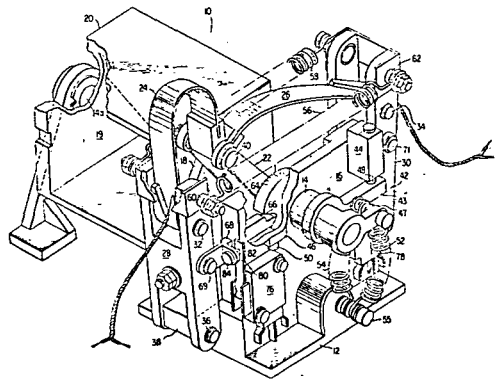

N75-29431*# National Aeronautics and Space Administration. Langley Research Center, Langley Station, Va.
PARTICULATE AND SOLAR RADIATION STABLE COATING FOR SPACECRAFT Patent Application
Wayne S. Slemp, inventor (to NASA) Filed 16 May 1975 8 p
(NASA-Case-LAR-10805-2; US-Patent-Appl-SN-578240) Avail: NTIS HC $3.25 CSCL 11C

A laminate thermal control coating for spacecraft comprised of a layer of solar radiation stable film, a layer of particulate radiation stable film applied to the upper surface of the solar radiation stable film, and a layer of reflecting material applied to the lower surface of the solar radiation stable film is proposed. The coating experiences no increase in solar radiation absorbtance upon exposure to particulate or solar radiation as the particulate radiation is substantially absorbed in the particulate radiation stable layer. The solar radiation partially absorbed by the particulate radiation stable layer is transmitted by the solar radiation stable film to the reflecting material which reflects it back through the laminate and into space. NASA

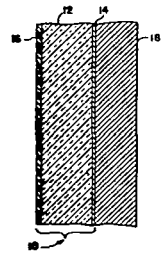

N75-29432*# National Aeronautics and Space Administration. Flight Research Center, Edwards, Calif.
AN IMPROVED FIFTH WHEEL Patent Application
William P. Albrecht, inventor (to NASA) and Ralph H. Sparks Filed 22 Jul. 1975 21 p
(NASA-Case-FRC-10081-1; US-Patent-Appl-SN-598504) Avail: NTIS HC $3.25 CSCL 13F

An improved fifth wheel for a tractor trailer rig is described. The wheel is characterized by a first subassembly including a wear plate adapted to be mounted on a downwardly facing surface of a trailer with a normally projected king pin. A second subassembly is adopted to be pivotally mounted on an upwardly facing surface of a tractor and brought into contiguous relation with the first subassembly. A receiver is included for capturing the king pin and safety means responsive to a failure of the king pin or its latching mechanism for joining the first subassembly with the second subassembly. NASA

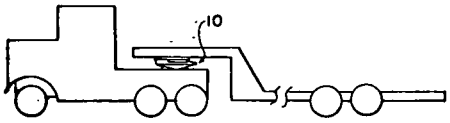

A drilled ball bearing is disclosed which has a pair of projections machined or otherwise formed from the inner surface of each of the cage pockets. These projections prevent misorientation of the openings of the drilled passages of the balls with respect to the surfaces of the inner and outer races. The machining of the projections from the inner surface of each of the cage pockets forms a unitary one piece structure which has improved resistance to fragmentation caused by either thermal or vibrational effects when compared to conventional two piece anti-tipping cage assemblies. Official Gazette of the U.S. Patent Office

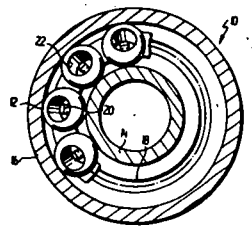

N75-30562* National Aeronautics and Space Administration. Lewis Research Center, Cleveland, Ohio.
LUBRICATED JOURNAL BEARING Patent
Fredrick T. Schuller and Warren A. Moore, inventors (to NASA) Issued 12 Aug. 1975 7 p Filed 11 Oct. 1973 Supersedes N74-10475 (12 - 01, p 0060)
(NASA-Case-LEW-11076-3; US-Patent-3,899,224; US-Patent-Appl-SN-405346; US-Patent-Class-308-121; US-Patent-Class-308-73) Avail: US Patent Office CSCL 13I

A plurality of bearing sectors are secured to a housing. Each sector comprises a pad mounted on a base. A stiff pad may be flexibly mounted while a flexible pad may be rigidly mounted. Official Gazette of the U.S. Patent Office

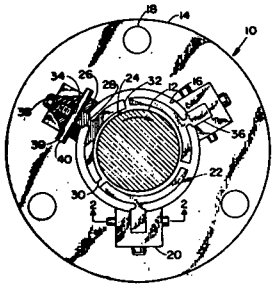

N75-31446* National Aeronautics and Space Administration. Lewis Research Center, Cleveland, Ohio.
DRILLED BALL BEARING WITH A ONE PIECE ANTI-TIPPING CAGE ASSEMBLY Patent
Arthur S. Irwin, inventor (to NASA) (Marlin-Rockwell Corp.) Issued 16 Sep. 1975 5 p Filed 12 Mar. 1974 Supersedes N74-18133 (12 - 09, p 1055) Sponsored by NASA
(NASA-Case-LEW-11925-1; US-Patent-3,905,660; US-Patent-Appl-SN-450505; US-Patent-Class-308-191; US-Patent-Class-308-195; US-Patent-Class-308-201) Avail: US Patent Office CSCL 13I

N75-32465*# National Aeronautics and Space Administration. Ames Research Center, Moffett Field, Calif.
PNEUMATIC LOAD COMPENSATING OR CONTROLLING SYSTEM Patent Application
James R. Rogers, inventor (to NASA) Filed 6 Oct. 1975 16 p
(NASA-Case-ARC-10907-1; US-Patent-Appl-SN-619986) Avail: NTIS HC $3.25 CSCL 13G

A pneumatic load compensating or controlling system for restraining a load with a predetermined force or applying a predetermined force to the load is described; it includes a source of pressurized air, a one-way pneumatic actuator operatively connected to a load, and a fluid conduit fluidically connecting the actuator with the source of pressurized air. The actuator is of the piston and cylinder type, and the end of the fluid conduit is connected to the upper or lower portion of the cylinder whereby the actuator alternatively and selectively restrains the load with a predetermined force or apply a predetermined force to the load. Pressure regulators are included within the system for variably selectively adjusting the pressurized fluid to predetermined values as desired or required; a pressure amplifier is included within the system for multiplying the pressurized values so as to achieve greater load forces. An accumulator is incorporated within the system as a failsafe operating mechanism, and visual and aural alarm devices, operatively associated with pressure detecting apparatus, readily indicate the proper or improper functioning of the system. NASA

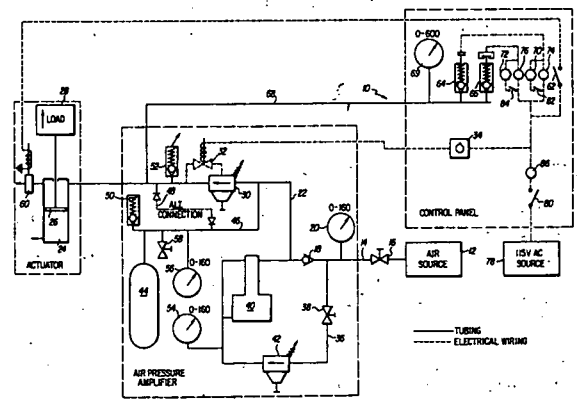

N75-33395* National Aeronautics and Space Administration. Marshall Space Flight Center, Huntsville, Ala.
SYSTEM FOR ENHANCING TOOL-EXCHANGE CAPABILITIES OF A PORTABLE WRENCH Patent
Ray E. Marlow, inventor (to NASA) (Sperry Rand Corp., Huntsville, Ala.) Issued 23 Sep. 1975 25 p Filed 9 Aug. 1973 Supersedes N73-30462 (11 - 21, p 2553) Sponsored by NASA
(NASA-Case-MFS-22283-1; US-Patent-3,907,312; US-Patent-Appl-SN-387095; US-Patent-Class-279-89; US-Patent-Class-29-26A; US-Patent-Class-279-1B; US-Patent-Class-279-107; US-Patent-Class-294-86.33; US-Patent-Class-294-116) Avail: US Patent Office CSCL 13I

An improved system for enhancing the tool-exchange capabilities of a portable wrench is described. The system is characterized by a sleeve telescopically received by the housing of a wrench motor. A pressure-responsive catch supported by the sleeve is included for alternately grasping and releasing tools coaxially aligned with the wrench and seated within a tool receptacle. Official Gazette of the U.S. Patent Office

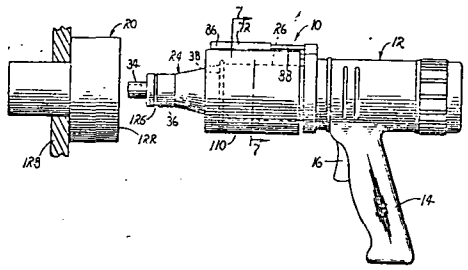

The pad, in turn, is affixed to the structure by a similar layer of silicone resin adhesive. NASA

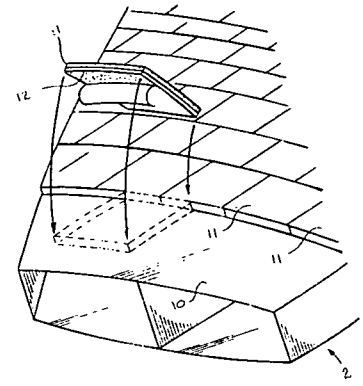

N75-31479*# National Aeronautics and Space Administration. Langley Research Center, Langley Station, Va.
VARYING DENSITY COMPOSITE STRUCTURE Patent Application
Harv Linebarier, inventor (to NASA) (Martin Marietta Corp., Denver) Filed 25 Apr. 1975 9 p
(Contract NAS1-9000)
(NASA-Case-LAR-11181-1; US-Patent-Appl-SN-571816) Avail: NTIS HC $3.25 CSCL 20K

An apparatus is disclosed which has a cellular core filled with material formed into stratified layers of varying density. The thermal, acoustic, or aesthetic characteristics of the composite structure thus produced may be tailored to suit a variety of design conditions. The method for producing the variable density composite structure is described. NASA

39 STRUCTURAL MECHANICS

Includes structural element design and weight analysis; fatigue; and thermal stress. For applications see *05 Aircraft Design, Testing and Performance* and *18 Spacecraft Design, Testing and Performance.*

N75-21671*# National Aeronautics and Space Administration. Lyndon B. Johnson Space Center, Houston, Tex.
THERMAL INSULATION ATTACHING MEANS Patent Application
Lubert Leger, inventor (to NASA) Filed 5 Mar. 1975 13 p
(NASA-Case-MSC-12619-1; US-Patent-Appl-SN-555750) Avail: NTIS HC $3.25 CSCL 22B

An isolation arrangement is reported for attaching tiles of insulating material to the surface of a structure sought to be protected against extreme temperatures of the nature expected to be encountered by the space shuttle orbiter. The insulating tiles are each affixed to an isolation pad formed of closely arranted and randomly oriented fibers by means of a silicone resin adhesive

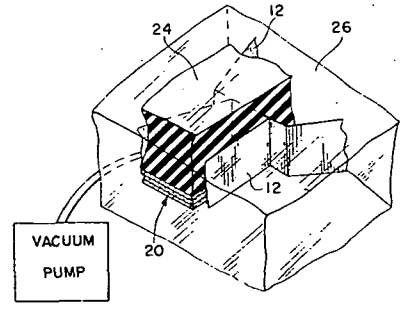

44 ENERGY PRODUCTION AND CONVERSION

Includes specific energy conversion systems, e.g., fuel cells and batteries; global sources of energy; fossil fuels; geophysical conversion; hydroelectric power; and wind power. For related information see also *07 Aircraft Propulsion and Power, 20 Spacecraft Propulsion and Power, 28 Propellants and Fuels,* and *85 Urban Technology and Transportation.*

N75-22900*# National Aeronautics and Space Administration. Marshall Space Flight Center, Huntsville, Ala.
PHOTOVOLTAIC CELL ARRAY Patent Application
Jon T. Eliason, inventor (to NASA) (Sperry Rand Corp., Huntsville, Ala.) Filed 25 Apr. 1975 9 p Sponsored by NASA
(NASA-Case-MFS-22458-1; US-Patent-Appl-SN-571458) Avail: NTIS HC $3.25 CSCL 10A

A construction technique for making high density solar cell arrays at lowered costs is presented. Closely spaced filaments of silicon are prepared to have a continuous layer-type semiconductor junction formed by creating an internal P-type conductivity region and outer N-type conductivity region. Electrical output connections are made to the P and N layer regions by means of P bus members and N bus members. The filaments of silicon and connecting buses are appropriately woven to form what is regarded as a solar cell blanket with an effective density of 100 to 1,000 photocells per square inch. NASA

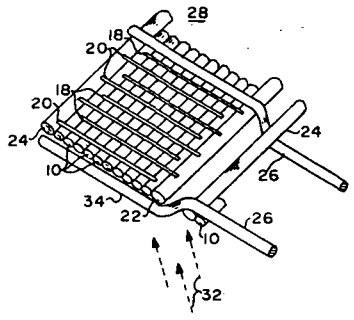

N75-27560*# National Aeronautics and Space Administration. Pasadena Office, Calif.
SOLAR POND Patent Application
Charles G. Miller (JPL) and James B. Stephens, inventors (to NASA) (JPL) Filed 27 Jun. 1975 18 p
(Contract NAS7-100)
(NASA-Case-NPO-13581-1; US-Patent-Appl-SN-590975) Avail: NTIS HC $3.25 CSCL 10A

Solar ponds were designed for the purpose of collecting low-temperature thermal energy on a large scale. The shallow pools include a number of narrow, elongated, grouped trenches with heat-absorbing black liners, and containing either a brine solution or plain water, depending on the means used to remove the thermal energy from the pond. The heat-absorbing liquid is kept separate from the thermal energy removing fluid by means such as transparent fluid or solid. NASA

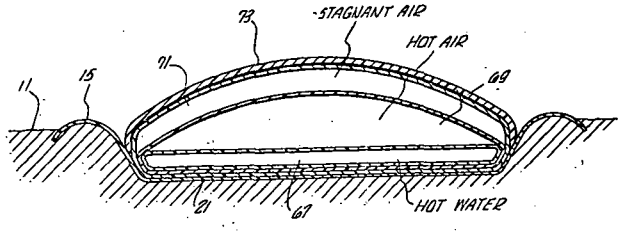

N75-27561*# National Aeronautics and Space Administration. *Marshall Space Flight Center, Huntsville, Ala.*
MECHANICAL THERMAL MOTOR Patent Application
Leopold A. Hein and William N. Myers, inventors (to NASA) Filed 30 Jun. 1975 21 p
(NASA-Case-MFS-23062-1; US-Patent-Appl-SN-591569) Avail: NTIS HC $3.25 CSCL 10A

A mechanical thermal motor was designed for converting thermal energy, such as solar energy, into mechanical motion for driving a pump. The thermal motor uses heated fluid produced by solar energy coming directly from the sun or through other fluid heaters. The motor includes a stationary core supported on a base structure. A cylindrical disc plate is carried adjacent a lower portion of the inner core and extends radially. An inner concentric cylinder encircles the inner core and is fixed by a number of radially extending spokes. An outer concentric cylinder encircles the inner concentric cylinder, and a spiral tube is coiled in the space between the two cylinders. The reciprocating motion of the spiral tube as it expands and contracts on the outer concentric cylinder is used as the input drive to a pump. NASA

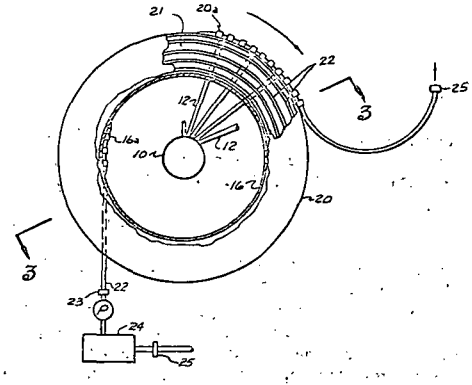

N75-28519*# National Aeronautics and Space Administration. Pasadena Office, Calif.

LOW COST SOLAR ENERGY COLLECTION SYSTEM Patent Application

Charles G. Miller (JPL) and James B. Stephens, inventors (to NASA) (JPL) Filed 24 Jul. 1975 57 p

(Contract NAS7-100)

(NASA-Case-NPO-13579-1; NASA-Case-NPO-13580-1; US-Patent-Appl-SN-598969) Avail: NTIS HC $4.25 CSCL 10A

A fixed, linear, ground-based primary reflector is described which has an extended curved-sawtooth contoured surface covered with a metallized polymeric reflecting material; It reflects solar energy to a movably supported collector that is kept at the concentrated line focus of the reflector primary. The primary flector was constructed by a process utilizing freeway paving machinery. The solar energy absorber is preferably a fluid-transporting pipe. Efficient utilization leading to high temperatures from the reflected solar energy was obtained by cylindrical shaped secondary reflectors that direct off-angle energy to the absorber pipe. Refocusing secondary reflectors which cause a series of discrete spots of highly concentrated solar energy to fall on the fluid-transporting pipe were used to obtain higher temperature levels. A seriatim arrangement of cylindrical secondary reflector stages and spot-forming reflector stages produces a high temperature solar energy collection system of greater efficiency.

NASA

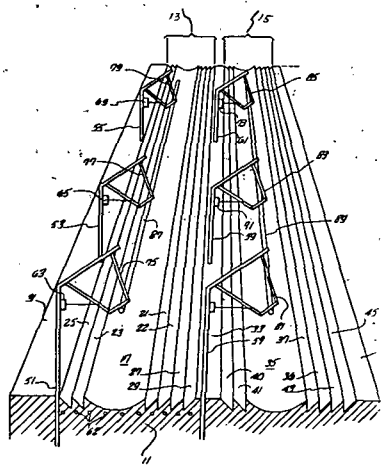

N75-29547*# National Aeronautics and Space Administration. Marshall Space Flight Center, Huntsville, Ala.

THERMAL ENERGY STORAGE SYSTEMS Patent Application

Lott W. Brantley, inventor (to NASA) Filed 7 Aug. 1975 14 p

(NASA-Case-MFS-23167-1; US-Patent-Appl-SN-602618) Avail: NTIS HC $3.25 CSCL 10A

A thermal energy storage system is proposed for converting a fluid such as water, into a superheated vapor for driving a turbine. An energy storage device is provided for storing thermal energy from the vapor to be utilized should the pressure of the vapor fall below a predetermined value. The energy storage device includes a storage tank with stacked vertical compartments containing metallic spheres filled with metal alloy for storing the thermal energy and a fluid reservoir below the stacked compartments.

Author

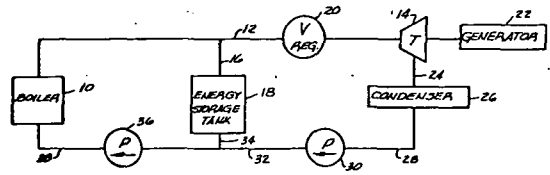

N75-29548*# National Aeronautics and Space Administration. Marshall Space Flight Center, Huntsville, Ala.

SOLAR ENERGY POWER SYSTEM Patent Application

Billy K. Davis, inventor (to NASA) Filed 21 Mar. 1975 17 p

(NASA-Case-MFS-21628-2; US-Patent-Appl-SN-561020) Avail: NTIS HC $3.25 CSCL 10A

A solar energy vapor (Freon) powered system for generating electrical energy for outer space application is described. Features of the system include: storage of the heat s absorbed from the sun by a thermal capacitor in which a mass of Pyrone liquifies when heat is applied and then solidifies to provide a heat output; an efficient solar boiler which uses an anodized titanium surface and a combination of shaped boiler tubes and complimentary reflectors; and a unique arrangement of heat recovery devices. The system provides efficiency in conversion of solar radiation into a heated work medium and in the generation of power from that medium.

NASA

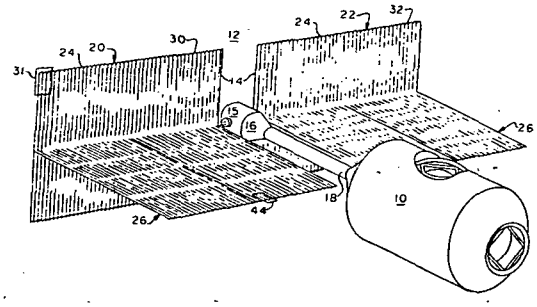

N75-32581* National Aeronautics and Space Administration. Marshall Space Flight Center, Huntsville, Ala.

SOLAR ENERGY POWER SYSTEM *Patent*

Billy K. Davis, inventor (to NASA) Issued 9 Sep. 1975 18 p Filed 4 Dec. 1973 Supersedes N74-14496 (12 - 05, p 0586) (NASA-Case-MFS-21628-1; US-Patent-3,903,699; US-Patent-Appl-SN-421702; US-Patent-Class-60-641; US-Patent-Class-165-105; US-Patent-Class-126-271; US-Patent-Class-244-173; US-Patent-Class-60-659) Avail: US Patent Office CSCL 10A

A solar energy vapor (Freon) powered system for generating electrical energy is described in which a portion of the heat absorbed from the sun in daylight is stored for use during darkness by a thermal capacitor. A mass of Pyrone, having a high thermal capacity, liquifies when heat is applied to it and goes through a solidification process to provide a heat output. A highly efficient solar boiler is constructed utilizing an anodized titanium surface and a particular combination of shaped boiler tubes and complementary reflectors. The overall efficiency of the system is further improved by a unique arrangement of heat recovery devices. Official Gazette of the U.S. Patent Office

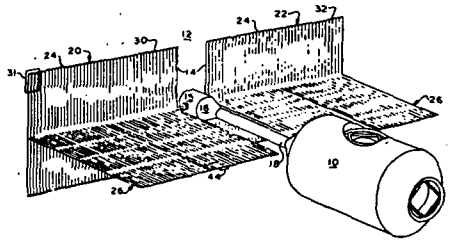

N75-32583*# National Aeronautics and Space Administration, Washington, D.C.

RECHARGEABLE BATTERY WHICH COMBATS SHAPE CHANGE OF THE ZINC ANODE **Patent Application**

Ernst M. Cohn, inventor (to NASA) Filed 13 Aug. 1975 15 p (NASA-Case-HQN-10862-1; US-Patent-Appl-SN-604374) Avail: NTIS HC $3.25 CSCL 10A

A rechargeable cell or battery is described which minimizes the shape change of the zinc anode. The ionic conductivity of the paths between the electrodes is controlled so that ion flow is greatest at the edges of the electrodes and least at the centers reducing migration of the zinc ions from the edges to the center of the anode. Several embodiments of the invention are presented and discussed. NASA

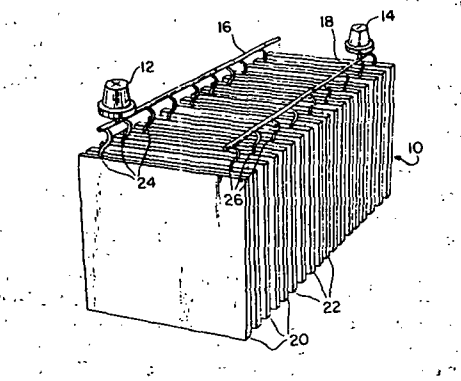

N75-32586*# National Aeronautics and Space Administration. Lewis Research Center, Cleveland, Ohio.

ELECTRICALLY RECHARGEABLE REDOX FLOW CELL **Patent Application**

L. H. Thaller, inventor (to NASA) Filed 22 Aug. 1975 18 p (NASA-Case-LEW-12220-1; US-Patent-Appl-SN-606891) Avail: NTIS HC $3.25 CSCL 10A

A bulk energy storage system is described. The system includes an electrically rechargeable reduction-oxidation cell divided by a membrane into two compartments, each containing an electrode. An anode fluid is directed through the first compartment at the same time a cathode fluid is directed through the second, thereby causing the electrode in the first to have a negative potential while the electrode in the second has a positive potential. The electrodes are inert with respect to the anode and cathode fluids and the dividing membrane is substantially impermeable to all except select ions of both fluids. The electrodes are connected to an intermittent electrical source which supplies current to a load as well as to the cell to recharge it. Ancillary circuitry is provided for disconnecting the intermittent source from the cell at prescribed times and for circulating the anode and cathode fluids according to desired parameters and conditions. NASA

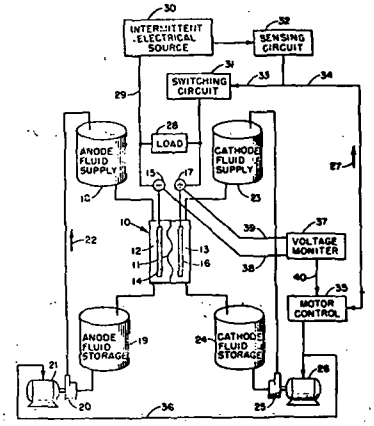

45 ENVIRONMENT POLLUTION

Includes air, noise, thermal and water pollution; environment monitoring; and contamination control.

N75-27585* National Aeronautics and Space Administration, Pasadena Office, Calif.

FLUORESCENCE DETECTOR FOR MONITORING ATMOSPHERIC POLLUTANTS *Patent*

Robert T. Menzies, inventor (to NASA) (JPL) Issued 24 Jun. 1975 7 p Filed 27 Dec. 1973 Supersedes N74-25932 (12 - 15, p 1790) Sponsored by NASA (NASA-Case-NPO-13231-1; US-Patent-3,891,848; US-Patent-Appl-SN-428993; US-Patent-Class-250-345; US-Patent-Class-250-343; US-Patent-Class-250-432) Avail: US Patent Office CSCL 14B

A device for the detection of pollutant gas molecules in the atmosphere is described. A laser source excites the atmospheric area which contains the pollutants to be analyzed. The laser beam causes the pollutants to fluoresce and emit a return signal

to the detector. The detector includes a gas cell that contains a compartment filled with the pollutant to be studied. This compartment absorbs the fluorescence from the reflected pollutant signal received at the detector. Another compartment is provided in the gas cell and the fluorescence of the reflected pollutant signal passes unimpeded through this second compartment. A difference measuring circuit detects the difference in output signals from the two compartments in order to obtain a signal indicative of the magnitude of the pollutant being analyzed.

Official Gazette of the U.S. Patent Office

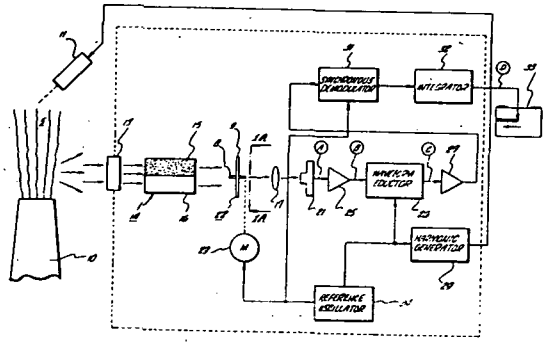

Rotary plant growth accelerating apparatus for increasing plant yields by effectively removing the growing plants from the constraints of gravity and increasing the plant yield per unit of space is described. The apparatus is comprised of cylindrical plant beds supported radially removed from a primary axis of rotation, with each plant bed being driven about its own secondary axis of rotation and simultaneously moved in a planetary path about the primary axis of rotation. Each plant bed is formed by an apertured outer cylinder, a perforated inner cylinder positioned coaxially, and rooting media disposed in the space between. A rotatable manifold distributes liquid nutrients and water to the rooting media through the perforations in the inner cylinders as the plant beds are continuously rotated by suitable drive means.

Official Gazette of the U.S. Patent Office

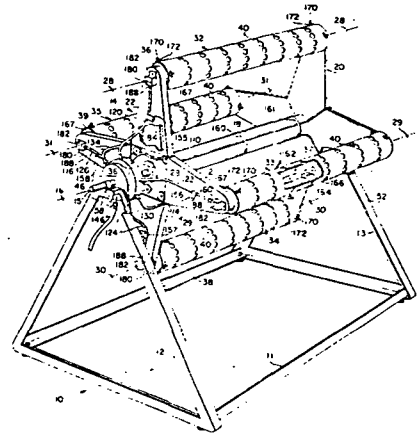

51 LIFE SCIENCES (GENERAL)

Includes genetics.

N75-21921*# National Aeronautics and Space Administration. Goddard Space Flight Center, Greenbelt, Md.

IMPROVED METHOD OF DETECTING AND COUNTING BACTERIA Patent Application

Grace L. Picciolo and Emmett W. Chappelle, inventors (to NASA) Filed 5 Mar. 1975 21 p

(NASA-Case-GSC-11917-2; US-Patent-Appl-SN-555641) Avail: NTIS HC $3.25 CSCL 06M

An improved method is provided for determining bacterial levels, especially in samples of aqueous physiological fluids. The method depends on the quantitative determination of bacterial adenosine triphosphate (ATP) in the presence of nonbacterial ATP. Bacterial ATP is released by cell rupture and is measured by an enzymatic bioluminescent assay. A concentration technique is included to make the method more sensitive. It is particularly useful where the fluid to be measured contains an unknown or low bacteria count. NASA

N75-25503* National Aeronautics and Space Administration. Ames Research Center, Moffett Field, Calif.

ROTARY PLANT GROWTH ACCELERATING APPARATUS Patent

Richard D. Dedolph, inventor (to NASA) Issued 13 May 1975 11 p Filed 27 Dec. 1973 Supersedes N74-13807 (12 - 05, p 0497)

(NASA-Case-ARC-10722-1; US-Patent-3,882,634; US-Patent-Appl-SN-428995; US-Patent-Class-47-1.2; US-Patent-Class-47-39; US-Patent-Class-47-58) Avail: US Patent Office CSCL 06C

N75-26629*# National Aeronautics and Space Administration. Goddard Space Flight Center, Greenbelt, Md.

APPLICATION OF LUCIFERASE ASSAY FOR ATP TO ANTIMICROBIAL DRUG SUSCEPTIBILITY TESTING Patent Application

Emmett W. Chappelle, Grace L. Picciolo, Michael J. Barza (New Engl. Med. Center), Louis Weinstein (New Engl. Med. Center), Stephanie A. Tuttle (New Engl. Med. Center), and Hillar Vellend, inventors (to NASA) (New Engl. Med. Center) Filed 30 Apr. 1975 29 p

(NASA-Case-GSC-12039-1; US-Patent-Appl-SN-572991) Avail: NTIS HC $3.75 CSCL 06M

A method is described for measuring the susceptibility of bacteria to antimicrobial agents by utilizing the bioluminescent reaction between adenosine triphosphate (ATP) and luciferase-luciferin mixtures. The bacterium is cultured in a growth medium and the amount of ATP in a sample of the bacterium is determined by measuring the amount of luminescent light emitted when the bacterial ATP is reacted with a luciferase-luciferin mixture. A fresh sample of the bacterium is then subjected to an antibiotic agent and the amount of bacterial ATP is assayed after the antibiotic treatment in the same manner. The ATP index is determined from the values obtained from the assay procedures. NASA

52 AEROSPACE MEDICINE

Includes physiological factors; biological effects of radiation; and weightlessness.

N75-33640* National Aeronautics and Space Administration. Lewis Research Center, Cleveland, Ohio.
OPHTHALMIC LIQUIFACTION PUMP Patent
Edward F. Baehr, Jack B. Esgar, and William J. McGannon, inventors (to NASA) Issued 23 Sep. 1975 17 p Filed 14 Sep. 1973 Supersedes N73-32000 (11 - 23, p 2749)
(NASA-Case-LEW-12051-1; US-Patent-3,906,954; US-Patent-Appl-SN-397478; US-Patent-Class-128-305; US-Patent-Class-128-230) Avail: US Patent Office CSCL 06B

A surgical tissue macerating and removal tool is disclosed wherein a rotating member having a cutting tip is utilized. When the instrument is to be used in an eye, a treatment fluid is supplied to the operative site and a first pump is provided to evacuate macerated material and treatment fluid from the eye. The rotating member may be disposed in a support tube having an aperture and communication with the first pump to provide for discharge of the macerated material and used treatment fluid. A second pump means is provided on the rotating member to provide a counter flow of treatment fluid into the space between the rotating member and the support tube. The second pump may provide additional support for the rotating member. Means is also provided for axially positioning rotating member to increase or decrease cutting action.
Official Gazette of the U.S. Patent Office

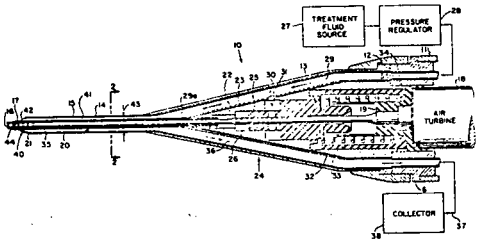

N75-33642*# National Aeronautics and Space Administration. Ames Research Center, Moffett Field, Calif.
THERMISTOR HOLDER FOR SKIN TEMPERATURE MEASUREMENTS Patent Application
John E. Greenleaf and Bill A. Williams, inventors (to NASA) Filed 29 Sep. 1975 12 p
(NASA-Case-ARC-10855-1; US-Patent-Appl-SN-617612) Avail: NTIS HC $3.25 CSCL 06B

An improved thermistor holder structure is disclosed which facilitates skin temperature measurement. The device includes a cylindrical plastic housing with tab extensions that permit the apparatus to be held to a skin surface by suitable elastic members. Ventilation openings are provided in the plastic housing to permit air circulation. An adjustable, resilient metal arm with a thermistor holding cup formed at one end is secured to the interior surface of the plastic housing such that the holding cup is located at the center of the housing. A thermistor temperature sensor is inserted into and held in the cup by interference fit. NASA

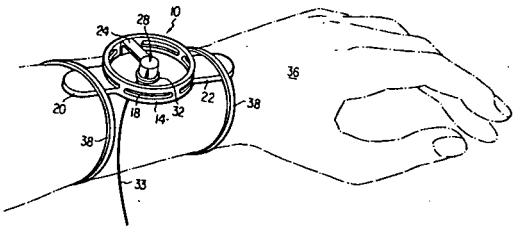

54 MAN/SYSTEM TECHNOLOGY AND LIFE SUPPORT

Includes human engineering; biotechnology; and space suits and protective clothing.

N75-21948*# National Aeronautics and Space Administration. Lyndon B. Johnson Space Center, Houston, Tex.
METHOD AND SYSTEM FOR IN VIVO MEASUREMENT OF BONE TISSUE Patent Application
John R. Cameron (Harvard Med. Coll.) and Philip F. Judy, inventors (to NASA) (Harvard Med. Coll.) Filed 11 Mar. 1975 24 p Sponsored by NASA
(NASA-Case-MSC-14276-1; US-Patent-Appl-SN-557430) Avail: NTIS HC $3.25 CSCL 06B

Methods and apparatus are provided for radiologically determining the bone mineral content of living human bone tissue independently of the concurrent presence of adipose and other soft tissues. A target section of the body of the subject is irradiated with a beam of penetrative radiations of preselected energy to determine the attenuation of such beam with respect to the intensity of each of two radiations of different predetermined energy levels. The resulting measurements are then employed to determine bone mineral content. NASA

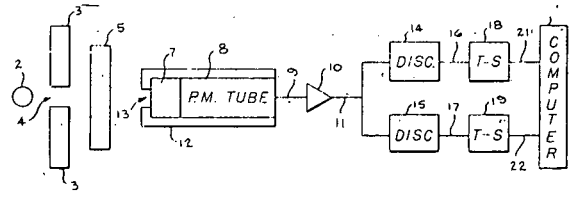

N75-25594*# National Aeronautics and Space Administration. Lyndon B. Johnson Space Center, Houston, Tex.
IODINE GENERATOR FOR RECLAIMED WATER PURIFICATION Patent Application
Richard A. Wynveen (Life Systems, Inc., Cleveland), James D. Powell (Life Systems, Inc., Cleveland), and Franz H. Schubert, inventors (to NASA) (Life Systems, Inc., Cleveland) Filed 25 Apr. 1975 13 p
(Contract NAS1-11765)
(NASA-Case-MSC-14632-1; US-Patent-Appl-SN-571459) Avail: NTIS HC $3.25 CSCL 06K

An electro-chemical iodine valve was designed to be operated by an electrical current in response to detection of iodine levels in the water supply. Additional iodine is injected into the water system in precise and controlled amounts so that a preset residual concentration of iodine in the water supply may be maintained. The iodine generator includes a sensor which electronically detects the iodine level in the water, and produces a correction current control. The correction current control causes the electro-chemical iodine valve to release iodine from the iodine accumulator into the iodine dispenser. The valve operates at a power of 10 mWatts and the system uses recycled water.

NASA

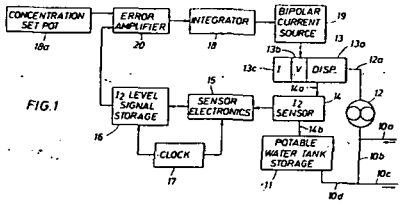

FIG. 1

N75-25598*# National Aeronautics and Space Administration. Pasadena Office, Calif.

CATHETER TIP FORCE TRANSDUCER FOR CARDIOVASCULAR RESEARCH Patent Application

Cyril Feldstein (JPL), Gilbert W. Lewis (JPL), Robert H. Silver (JPL), and Virgil H. Culler, inventors (to NASA) (JPL) Filed 16 May 1975 11 p

(Contract NAS7-100)

(NASA-Case-NPO-13643-1; US-Patent-Appl-SN-578241) Avail: NTIS HC $3.25 CSCL 06B

A force transducer for measuring dynamic force activity within the heart of a subject essentially consisting of a U-shaped beam of low elastic compliance material is proposed. Two tines extend from the beam's legs and a long coil spring is attached to the beam. A strain gauge is coupled to one of the beam's legs to sense deflections thereof. The beam with the tines and most of the spring are surrounded by a flexible tube, defining a catheter, which is insertable into a subject's heart through an appropriate artery. The tines are extractable from the catheter for implantation into the myocardium by pushing on the end of the spring which extends beyond the external end of the catheter. The tines are retractable back into the catheter, prior to catheter removal from the subject, by pulling on the externally exposed spring end.

NASA

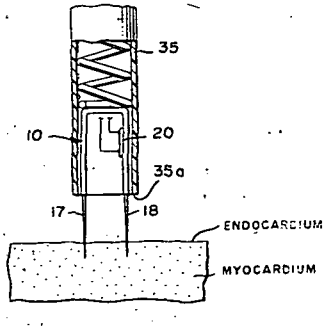

N75-27758* National Aeronautics and Space Administration. Pasadena Office, Calif.

COOPERATIVE MULTIAXIS SENSOR FOR TELEOPERATION OF ARTICLE MANIPULATING APPARATUS Patent

Alan R. Johnston, inventor (to NASA) (JPL) Issued 10 Jun. 1975 10 p Filed 31 May 1973 Sponsored by NASA

(NASA-Case-NPO-13386-1; US-Patent-3,888,362; US-Patent-Appl-AN-475336; US-Patent-Class-214-1B; US-Patent-Class-214-1CM; US-Patent-Class-318-640) Avail: US Patent Office CSCL 05H

Apparatus for grasping an article under remote control is provided with a sensor comprised of a photodetecting cell divided into four quadrants to define X and Y coordinates and a light emitting diode on a Z axis normal to the X and Y axes. Two additional light emitting diodes are equally spaced on each side of the first diode along the X axis of the sensor. The diodes are sequentially energized and images of the diodes are reflected by a target comprising two plane mirrors and a corner retroreflector mounted on the article to produce signals from the cells which, when combined and nulled, will align X; Y, and Z axes of the sensor with corresponding axes Xm, Ym and Zm of the target, and also decrease the distance between the sensor and the mirror to a predetermined value.

Official Gazette of the U.S. Patent Office

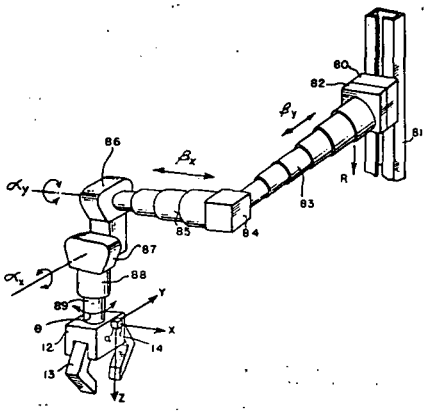

N75-27759* National Aeronautics and Space Administration. Lyndon B. Johnson Space Center, Houston, Tex.

MULTIPARAMETER VISION TESTING APPARATUS Patent

Stacy R. Hunt, Jr. (GE, Philadelphia), Robert J. Homkes (GE, Philadelphia), Wilmer B. Poteate (GE, Philadelphia), and Andrew C. Sturgis, inventors (to NASA) (GE, Philadelphia) Issued 24 Jun. 1975 23 p Filed 10 Sep. 1973 Supersedes N74-32549 (12 - 22, p 2651) Continuation-in-Part of Abandoned US Patent Appl. SN-160371, filed 7 Jul. 1971 Sponsored by NASA

(NASA-Case-MSC-13601-2; US-Patent-3,891,311; US-Patent-Appl-SN-395495; US-Patent-Class-351-38). CSCL 06B

Compact vision testing apparatus is described for testing a large number of physiological characteristics of the eyes and visual system of a human subject. The head of the subject is inserted into a viewing port at one end of a light-tight housing containing various optical assemblies. Visual acuity and other refractive characteristics and ocular muscle balance characteristics of the eyes of the subject are tested by means of a retractable phoroptor assembly carried near the viewing port and a film cassette unit carried in the rearward portion of the housing (the latter selectively providing a variety of different visual targets which are viewed through the optical system of the phoroptor assembly). The visual dark adaptation characteristics and absolute brightness threshold of the subject are tested by means of a

projector assembly which selectively projects one or both of a variable intensity fixation target and a variable intensity adaptation test field onto a viewing screen located near the top of the housing. Official Gazette of the U.S. Patent Office

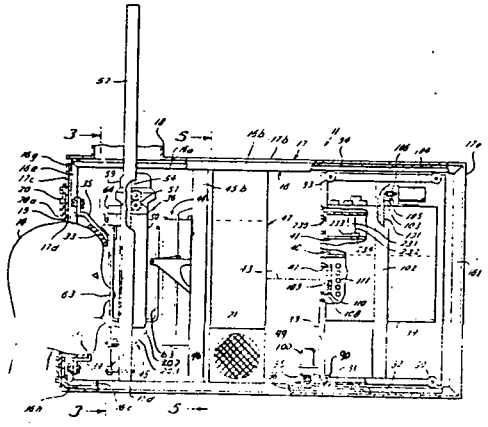

N75-27760* National Aeronautics and Space Administration. Ames Research Center, Moffett Field, Calif.

REFERENCE APPARATUS FOR MEDICAL ULTRASONIC TRANSDUCER Patent

Robert D. Lee, Robert J. Hudock, and Dale I. Shute, inventors (to NASA) Issued 8 Jul. 1975 8 p Filed 21 Dec. 1973 Supersedes N74-13818 (12 - 05, p 0499)
(NASA-Case-ARC-10753-1; US-Patent-3,893,449; US-Patent-Appl-SN-427395; US-Patent-Class-128-2V; US-Patent-Class-74-471XY; US-Patent-Class-128-2.05Z; US-Patent-Class-128-24A) Avail: US Patent Office CSCL 06B

A portable miniature ultrasonic transducer positioning apparatus is described; the apparatus has a transducer receiving sleeve coupled to a pair of orthogonally orientated, independently pivotable yokes. The yokes are pivotably mounted to a base member. A pair of potentiometers are coupled to the axes of the yokes and to a dual meter sleeve position indicator for indicating, with respect to the axes of the yokes, the angular position of a probe slidably fitted in the sleeve. An oscilloscope or similar signal display device is coupled to the probe for providing signal readout for use in ultrasonic cardiology oscilloscope studies. As an option, a ball lever assembly is provided for remotely controlling yoke position and the angular position of the sleeve and a probe fitted to it.

Official Gazette of the U.S. Patent Office

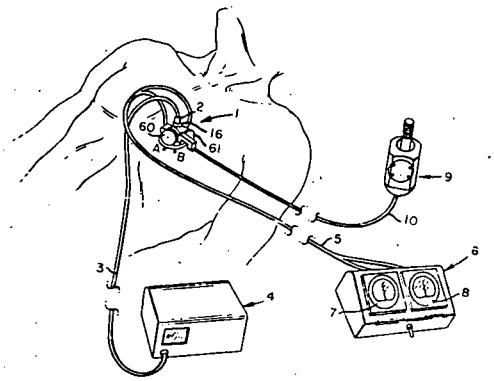

N75-27761* National Aeronautics and Space Administration. Pasadena Office, Calif.

HEAT STERILIZABLE PATIENT VENTILATOR Patent

Alexander S. Irons (JPL), Paul P. Muehter (JPL), and Willie D. Kent, inventors (to NASA) (JPL) Issued 8 Jul. 1975 9 p Filed 7 Mar. 1974 Supersedes N74-17858 (12 - 09, p 1019) Sponsored by NASA
(NASA-Case-NPO-13313-1; US-Patent-3,893,458; US-Patent-Appl-SN-449153; US-Patent-Class-128-145.8; US-Patent-Class-55-DIG.35) Avail: US Patent Office CSCL 06B

An improved heat-sterilizable patient ventilator is disclosed. The device is characterized by a ported center-body, a shell formed of heat sterilizable material mounted on the center-body and defining a hermetically sealed reservoir for confining under positive pressure a mixture of bacteria-free gas, and a pneumatic circuit including an oxygen delivery jet coupled with an absolute filtration system for delivering bacteria-free mixture of gases to the reservoir. Official Gazette of the U.S. Patent Office

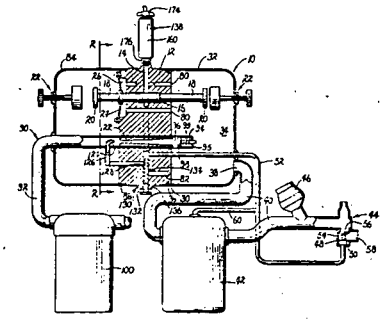

N75-32766*# National Aeronautics and Space Administration. Ames Research Center, Moffett Field, Calif.

AUTOMATIC FLUID DISPENSER Patent Application

Peter C. Sakellaris, inventor (to NASA) (Oregon Univ. Dental School, Portland) Filed 8 Oct. 1975 17 p Sponsored by NASA
(NASA-Case-ARC-10820-1; US-Patent-Appl-SN-620675) Avail: NTIS HC $3.25 CSCL 06K

An apparatus for dispensing fluid to test animals according to a time schedule is disclosed. Fluid automatically flows to individual dispensing units at predetermined times from a fluid supply and is available only for a predetermined interval of time after which an automatic control causes the fluid to drain from the individual dispensing units. Fluid deprivation continues until

the beginning of a new cycle when the fluid is once again automatically made available at the individual dispensing units.
NASA

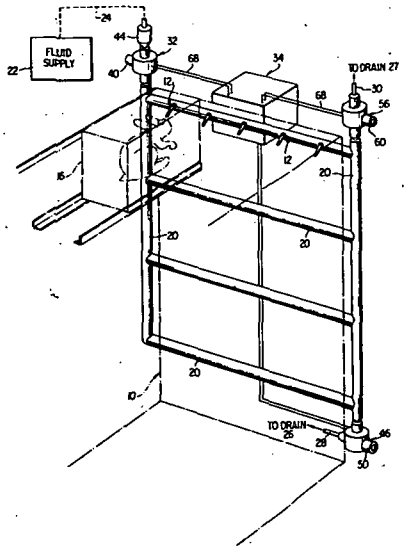

N75-32767*# National Aeronautics and Space Administration. Marshall Space Flight Center, Huntsville, Ala.
ACTUATOR DEVICE FOR ARTIFICIAL LEG Patent Application
John L. Burch, inventor (to NASA) Filed 12 Sep. 1975 27 p
(NASA-Case-MFS-23225-1; US-Patent-Appl-SN-612965) Avail: NTIS HC $3.75 CSCL 06B

An actuator device is provided for moving an artificial leg of a person having a prosthesis replacing an entire leg and hip joint. The device includes an articulated hip joint assembly carried by the natural leg and a second articulated hip joint assembly carried by the prosthesis. The energy created from the movement of the natural leg is transferred by a compressible fluid from the first hip joint assembly to the second hip joint assembly for moving the artificial leg.
NASA

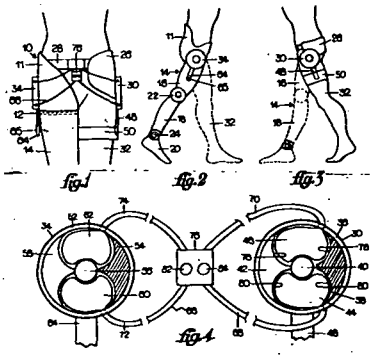

N75-33725*# National Aeronautics and Space Administration. Marshall Space Flight Center, Huntsville, Ala.
AN IMPROVED LOAD HANDLING DEVICE Patent Application
John L. Burch, Peter H. Broussard, Jr., and Calvin O. Mueller, inventors (to NASA) Filed 16 Sep. 1975 17 p
(NASA-Case-MFS-23233-1; US-Patent-Appl-SN-613845) Avail: NTIS HC $3.25 CSCL 06K

An improved load handling device particularly suited for use as an escape device for high altitude structures is reported. The device is characterized by a vertically oriented base, adapted to be mounted near a selected opening of a building or the like, having mounted thereon a capstan including a drum supported for rotation. A storage reel is mounted on the base in spaced relation with the drum. A flexible line is stored in a variable number of turns on the storage reel and wound about the drum in a fixed number of turns for suspending loads attached. A double acting dashpot restrains the drum against load induced rotation.
NASA

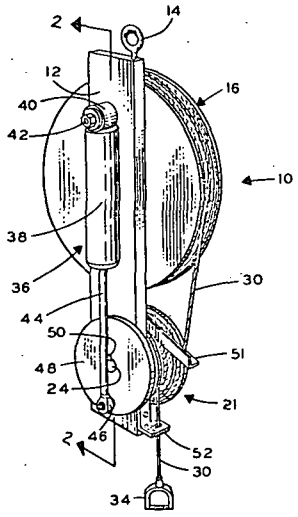

63 CYBERNETICS

Includes feedback and control theory. For related information see also *54 Man/System Technology and Life Support.*

N75-25539*# National Aeronautics and Space Administration. Langley Research Center, Langley Station, Va.
THERAPEUTIC HAND EXERCISER Patent Application
Donald E. Barthlome, inventor (to NASA) Filed 3 Jun. 1975 15 p
(NASA-Case-LAR-11667-1; US-Patent-Appl-SN-583487) Avail: NTIS HC $3.25 CSCL 06B

An apparatus is described for cyclic therapeutic exercise of incapacitated hands. It alternately imparts a straightening and bending motion to the fingers by the use of a splint-like inflatable member attached to the top of the hand and a lower pouch in the palm of the hand which pulls a flap tight around the fingertips. The basic operation of the invention in straightening the fingers is described. The upper pouch is inflated causing the fingers, which are attached to it by finger loops, to be straightened. When the upper pouch is deflated through a valve, the lower pouch is inflated, and this pulls a flap tight around the fingertips

causing them to bend. Alternate inflation and deflation of the upper and lower pouches is accomplished by a pumping system, which, by use of a cycling valve, assures one pouch is always being deflated while the other is being inflated. NASA

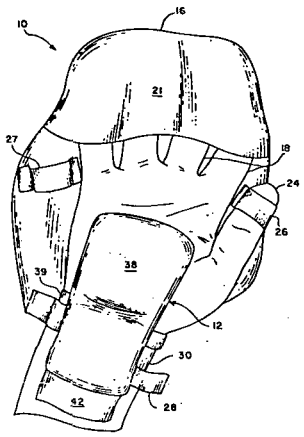

70 PHYSICS (GENERAL)

For geophysics see *46 Geophysics*. For astrophysics see *90 Astrophysics*. For solar physics see *92 Solar Physics*.

N75-26789*# National Aeronautics and Space Administration. Marshall Space Flight Center, Huntsville, Ala.
ANTI-GRAVITY DEVICE Patent Application
Sudarshan Palsingh, inventor (to NASA) (NAS-NRC) Filed 28 May 1975 14 p Sponsored by NASA
(NASA-Case-MFS-22758-1; US-Patent-Appl-SN-581514) Avail: NTIS HC $3.25 CSCL 20K

An educational toy useful in demonstrating fundamental concepts regarding the laws of gravity is described. The device comprises a sphere 10 of radius r resting on top of sphere 12 of radius R. The center of gravity of sphere 10 is displaced from its geometrical center by distance D. The dimensions are so related that D((R+r)/r) is greater than r. With the center of gravity of sphere 10 lying on a vertical line, the device is in equilibrium. When sphere 10 is rolled on the surface of sphere 12 it will return to its equilibrium position upon release. This creates an illusion that sphere 10 is defying the laws of gravity. In reality, due to the above noted relationship of D, R, and r, the center of gravity of sphere 10 rises from its equilibrium position as it rolls a short distance up or down the surface of sphere 12. Author

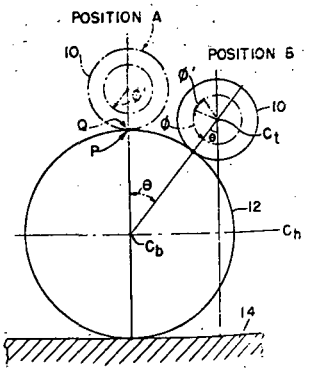

73 NUCLEAR AND HIGH-ENERGY PHYSICS

Includes elementary and nuclear particles; and reactor theory. For space radiation see *93 Space Radiation*.

N75-22108*# National Aeronautics and Space Administration, Washington, D.C.
NONEQUILIBRIUM RADIATION NUCLEAR REACTOR Patent Application
Karlheinz Thom (Fla. Univ., Gainesville) and Richard T. Schneider, inventors (to NASA) (Fla. Univ., Gainesville) Filed 21 Mar. 1975 18 p Sponsored by NASA
(NASA-Case-HQN-10841-1; US-Patent-Appl-SN-560891) Avail: NTIS HC $3.25 CSCL 18L

An externally moderated themal nuclear reactor is disclosed which is designed to provide output power in the form of electromagnetic radiation. The reactor is a gaseous fueled nuclear cavity reactor device which can operate over wide ranges of temperature and pressure, and which includes the capability of processing and recycling waste products such as long-lived transuranium actinides. The primary output of the device may be in the form of coherent radiation, so that the reactor may be utilized as a self-critical nuclear pumped laser. NASA

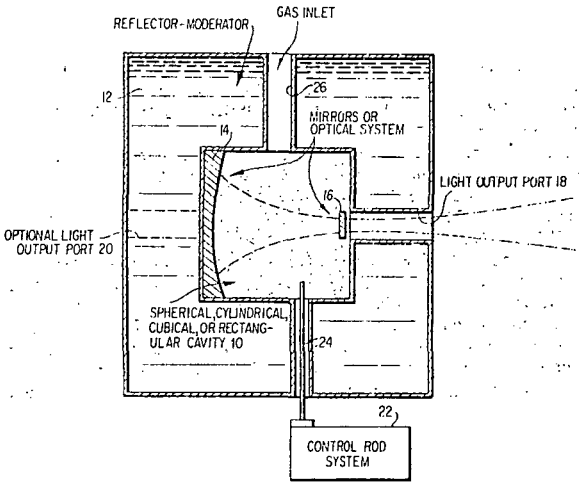

N75-30876* National Aeronautics and Space Administration. Lewis Research Center, Cleveland, Ohio.
PROTECTED ISOTOPE HEAT SOURCE Patent
Raymond K. Burns, Lloyd I. Shure, and Elliott D. Katzen, inventors (to NASA) Issued 12 Aug. 1975 5 p Filed 26 May 1971 Supersedes N71-35153 (9 - 21, p 3530)
(NASA-Case-LEW-11227-1; US-Patent-3,899,680; US-Patent-Appl-SN-146939; US-Patent-Class-250-496; US-Patent-Class-244-1SS; US-Patent-Class-250-493) Avail: US Patent Office CSCL 18B

A radioactive isotope capsule is disposed in a container (heat shield) which will have a single stable trim attitude when reentering the earth's atmosphere and while falling to earth. The center of gravity of the heat source is located forward of the midpoint

between the front face and the rear face of the container. The capsule is insulated from the front face of the container but not from the rear surface of the container.

Official Gazette of the U.S. Patent Office

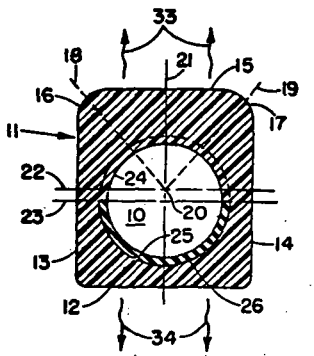

74 OPTICS

Includes light phenomena.

N75-22119*# National Aeronautics and Space Administration. Lyndon B. Johnson Space Center, Houston, Tex.

WINDOW DEFECT PLANAR MAPPING TECHNIQUE Patent Application

Fred R. Minton (Rockwell Intern.) and Uel O. Graham, inventors (to NASA) (Rockwell Intern.) Filed 14 Mar. 1975 10 p (Contract NAS9-14000)

(NASA-Case-MSC-19442-1; US-Patent-Appl-SN-558600) Avail: NTIS HC $3.25 CSCL 20F

A method of window defect planar mapping is presented. The windows are edge lighted by fiber optics and light sensitive contact paper is applied to the surface of the windows. When the light source is activated, the windows are illiminated, and the light sensitive paper is exposed. A photographic record of window defects is provided upon subsequent chemical development of the light sensitive paper. NASA

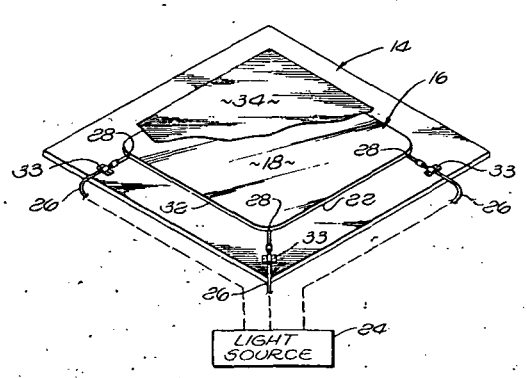

N75-25706* National Aeronautics and Space Administration, Washington, D.C.

PHYSICAL CORRECTION FILTER FOR IMPROVING THE OPTICAL QUALITY OF AN IMAGE Patent

Shui Yee Lee, inventor (to NASA) (Bellcomm, Inc.) Issued 13 May 1975 12 p Filed 16 Jul. 1971 Supersedes N72-21663 (10 - 12, p 1642) Sponsored by NASA

(NASA-Case-HQN-10542-1; US-Patent-3,883,436; US-Patent-Appl-SN-163151; US-Patent-Class-250-566; US-Patent-Class-178-DIG.25; US-Patent-Class-350-311) Avail: US Patent Office CSCL 20F

A family of physical correction filters is described. Each filter is designed to correct image content of a photographed scene of limited resolution and includes a first filter element with a pinhole through which light passes to a differential amplifier. A second filter element through which light passes through one or more openings, whose geometric configuration is a function of the cause of the resolution loss included. The light, passing through the second filter element, is also supplied to the differential amplifier whose output is used to activate an optical display or recorder to reproduce a photograph or display of the scene in the original photograph or display of the scene in the original photograph with resolution which is significantly greater than that characterizing the original photograph.

Official Gazette of the U.S. Patent Office

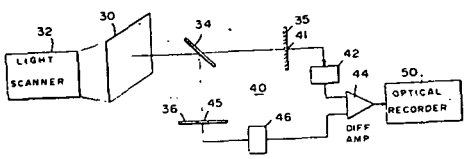

N75-28871*# National Aeronautics and Space Administration. Lyndon B. Johnson Space Center, Houston, Tex.

OPTICAL NOISE SUPPRESSION DEVICE AND METHOD Patent Application

Joseph L. Horner, inventor (to NASA) (DOT) Filed 30 Jun. 1975 19 p Sponsored by NASA

(NASA-Case-MSC-12640-1; US-Patent-Appl-SN-591568) Avail: NTIS HC $3.25 CSCL 20F

Disclosed is a device and method for suppression of optical noise in an optical spatial filtering system using highly coherent light. In the disclosed embodiment, input photographic film to be processed in the system, and output photographic film to be exposed, are each mounted on lateral translation devices. During application of the coherent light for exposure of the output film, the two translation devices are moved in synchronism by a motor-driven gear and linkage assembly. The ratio of the resulting output film translation to the input film translation is equal to the magnification of the optical data processing system. The noise pattern associated with the lenses and other elements in the optical processing system remains stationary while the image producing light moves laterally through the pattern with the output film, thus averaging out the noise effect at the output film.

Dissert. Abstr.

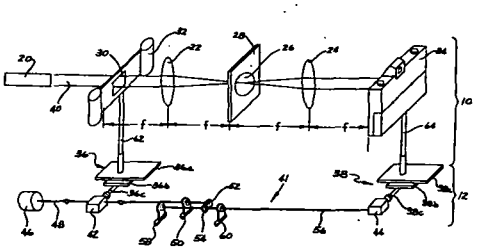

N75-32894*# National Aeronautics and Space Administration. *Pasadena Office, Calif.*
LIGHTWEIGHT REFLECTOR ASSEMBLY AND METHOD Patent Application
Maurice J. Argoud (JPL), Jack Jolley (JPL), and Walter L. Walker, inventors (to NASA) (JPL) Filed 24 Sep. 1975 29 p
(Contract NAS7-100)
(NASA-Case-NPO-13707-1; US-Patent-Appl-SN-617202) Avail: NTIS HC $3.75 CSCL 20F

An invention for a lightweight solar reflector assembly having a glass cellular substrate and a method of formimg the reflector assembly was described. The novelty of the invention appears to reside in the method of forming a large low cost reflective surface for use in a solar concentrator or antenna. The invention also includes the reflective component combination of a lamina glass reflective surface and a lightweight cellular glass substrate having the same coefficient of thermal expansion to provide a high quality optical reflective surface. Author

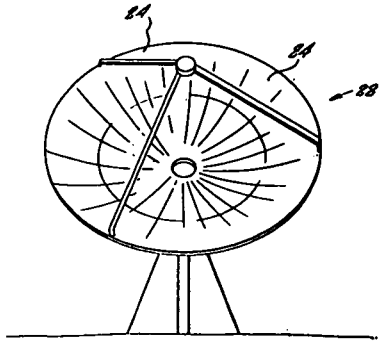

N75-33835*# National Aeronautics and Space Administration. Lyndon B. Johnson Space Center, Houston, Tex.
METHOD AND SYSTEM FOR PRODUCING CHROMA SIGNALS Patent Application
Kenneth Vorhaben (Lockheed Electronics Co., Houston, Tex.) and Phillip C. Lipoma, inventors (to NASA) (Lockheed Electronics Co., Houston, Tex.) Filed 12 Sep. 1975 31 p
(Contract NAS9-12200)
(NASA-Case-MSC-14683-1; US-Patent-Appl-SN-612967) Avail: NTIS HC $3.75 CSCL 20F

Disclosed is a method and system for obtaining electronic chroma signals with a single scanning type image device by optically producing a color multiplexed light signal using an arrangement of dichroic filter stripes. A two layer filter system is used to color modulate external light which is then detected by an image pickup tube. The resulting time division multiplexed electronic signal from the pickup tube is converted by a decoder into a green color signal, and a signal red/blue multiplexed signal, which is demultiplexed to produce red and blue color signals. The three primary color signals are capable of being encoded as standard NTSC color signals. NASA

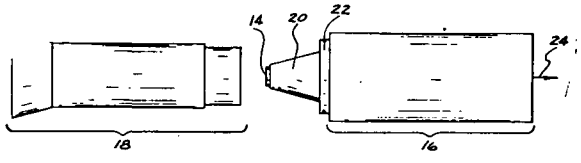

76 SOLID-STATE PHYSICS

Includes superconductivity. For related information see also *33 Electronics and Electrical Engineering* and *36 Lasers and Masers.*

N75-25730* National Aeronautics and Space Administration. Goddard Space Flight Center, Greenbelt, Md.
RADIATION HARDENING OF MOS DEVICES BY BORON Patent
Vitaly Danchenko, inventor (to NASA) Issued 6 May 1975 5 p Filed 4 Sep. 1973 Supersedes N73-32114 (11 - 23, p 2764) Continuation-in-part of US Patent Appl. SN-206266, filed 9 Dec. 1971
(NASA-Case-GSC-11425-2; US-Patent-3,882,530; US-Patent-Appl-SN-394206; US-Patent-Class-357-23; US-Patent-Class-357-29; US-Patent-Class-357-42; US-Patent-Class-357-52; US-Patent-Class-357-54; US-Patent-Class-357-91; US-Patent-Appl-SN-206266) Avail: US Patent Office CSCL 20L

A technique is described for stabilizing the gate threshold potential at room temperature of a radiation subjected MOS field effect device with a semiconductor substrate, and insulating layer of oxide on the substrate, and a gate electrode disposed on the insulating layer. Boron is introduced into the insulating oxide immediately adjacent the semiconductor-insulator interface. The concentration of boron in the oxide layer is maintained at 10 atoms/cu cm. Radiation induced positive gate charge accumulations which would cause shifting of the gate threshold potential of a radiation subjected MOS device, and render the device unstable and inoperative are reduced.
Official Gazette of the U.S. Patent Office

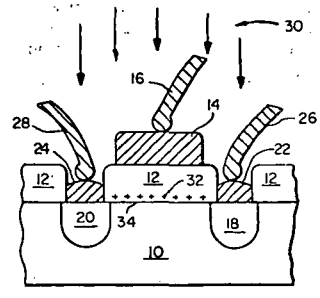

N75-32928*# National Aeronautics and Space Administration. Marshall Space Flight Center, Huntsville, Ala.
METHOD OF CRYSTALLIZATION Patent Application
Hans U. Walter (Ala. Univ., Huntsville) and Robert S. Snyder, inventors (to NASA) Filed 5 Sep. 1975 10 p
(NASA-Case-MFS-23001-1; US-Patent-Appl-SN-610801) Avail: NTIS HC $3.25 CSCL 20L

A method of growing or refining bulk singles crystals, particularly crystals of semiconductor materials useful in the manufacture of solid state electronic components, is reported. A principle difficulty in the crystallization of such materials is that of obtaining crystals of a desired maximum size. The procedure described solves this problem by growing crystals in a base

material that is suspended, positioned, and shaped as a containerless melt by wetting forces in an environment substantially free of gravity. NASA

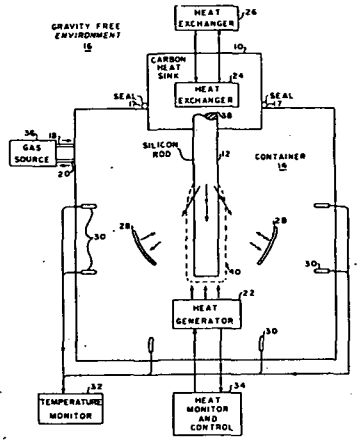

N75-33861*# National Aeronautics and Space Administration. Marshall Space Flight Center, Huntsville, Ala.

A PROCESS FOR FORMING A CRYSTALLINE FILM Patent Application.

Hans F. Wuenscher, inventor (to NASA) Filed 19 Sep. 1975 15 p

(NASA-Case-MFS-23226-1; US-Patent-Appl-SN-614990) Avail: NTIS HC $3.25 CSCL 20L

A process for forming crystalline films in a weightless environment is reported. The surface of a liquid melt is expanded by injecting a quantity of gas and then subsequently cooled in steps until crystallization to a predetermined configuration is obtained. Cooling takes place at a rate proportional to the rate of film expansion. NASA

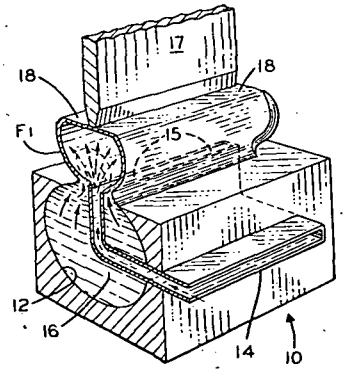

1. Report No.	2. Government Accession No.	3. Recipient's Catalog No.
NASA SP-7039 (08)		

4. Title and Subtitle	5. Report Date
NASA PATENT ABSTRACTS BIBLIOGRAPHY A Continuing Bibliography	January 1976
	6. Performing Organization Code
7. Author(s)	8. Performing Organization Report No.
	10. Work Unit No.
9. Performing Organization Name and Address National Aeronautics and Space Administration Washington, DC 20546	11. Contract or Grant No.
	13. Type of Report and Period Covered
12. Sponsoring Agency Name and Address	14. Sponsoring Agency Code

15. Supplementary Notes

Section 1 - Abstracts

16. Abstract

This bibliography is issued in two sections: Section 1 - Abstracts, and Section 2 - Indexes. This issue of the Abstract Section cites 180 patents and applications for patent introduced into the NASA scientific and technical information system during the period of July 1975 through December 1975. Each entry in the Abstract Section consists of a citation, an abstract, and in most cases, a key illustration selected from the patent or application for patent. This issue of the Index Section contains entries for 2905 patent and application for patent citations covering the period May 1969 through December 1975. The Index Section contains five indexes -- subject, inventor, source, number and accession number.

17. Key Words (Suggested by Author(s))	18. Distribution Statement
Bibliographies Inventions NASA Programs Patents	Unclassified - Unlimited

19. Security Classif. (of this report)	20. Security Classif. (of this page)	21. No. of Pages	22. Price*
Unclassified	Unclassified	74	$3.00 HC

*For sale by the National Technical Information Service, Springfield, Virginia 22161

PUBLIC COLLECTIONS OF NASA DOCUMENTS

DOMESTIC

NASA distributes its technical documents and bibliographic tools to ten special libraries located in the organizations listed below. Each library is prepared to furnish the public such services as reference assistance, interlibrary loans, photocopy service, and assistance in obtaining copies of NASA documents for retention.

CALIFORNIA
University of California, Berkeley

COLORADO
University of Colorado, Boulder

DISTRICT OF COLUMBIA
Library of Congress

GEORGIA
Georgia Institute of Technology, Atlanta

ILLINOIS
The John Crerar Library, Chicago

MASSACHUSETTS
Massachusetts Institute of Technology, Cambridge

MISSOURI
Linda Hall Library, Kansas City

NEW YORK
Columbia University, New York

PENNSYLVANIA
Carnegie Library of Pittsburgh

WASHINGTON
University of Washington, Seattle

NASA publications (those indicated by an "*" following the accession number) are also received by the following public and free libraries:

CALIFORNIA
Los Angeles Public Library
San Diego Public Library

COLORADO
Denver Public Library

CONNECTICUT
Hartford Public Library

MARYLAND
Enoch Pratt Free Library, Baltimore

MASSACHUSETTS
Boston Public Library

MICHIGAN
Detroit Public Library

MINNESOTA
Minneapolis Public Library

MISSOURI
Kansas City Public Library
St. Louis Public Library

NEW JERSEY
Trenton Public Library

NEW YORK
Brooklyn Public Library
Buffalo and Erie County Public Library
Rochester Public Library
New York Public Library

OHIO
Akron Public Library
Cincinnati Public Library
Cleveland Public Library
Dayton Public Library
Toledo Public Library

OKLAHOMA
Oklahoma County Libraries, Oklahoma City

TENNESSEE
Memphis Public Library

TEXAS
Dallas Public Library
Fort Worth Public Library

WASHINGTON
Seattle Public Library

WISCONSIN
Milwaukee Public Library

An extensive collection of NASA and NASA-sponsored documents and aerospace publications available to the public for reference purposes is maintained by the American Institute of Aeronautics and Astronautics, Technical Information Service, 750 Third Avenue, New York, New York, 10017.

EUROPEAN

An extensive collection of NASA and NASA-sponsored publications is maintained by the British Library Lending Division, Boston Spa, Wetherby, Yorkshire, England. By virtue of arrangements other than with NASA, the British Library Lending Division also has available many of the non-NASA publications cited in *STAR*. European requesters may purchase facsimile copy or microfiche of NASA and NASA-sponsored documents, those identified by both the symbols "#" and "*", from: ESRO/ELDO Space Documentation Service, European Space Research Organization, 114, av. Charles de Gaulle, 92-Neuilly-sur-Seine, France.

NATIONAL AERONAUTICS AND SPACE ADMINISTRATION
WASHINGTON, D.C. 20546

OFFICIAL BUSINESS
PENALTY FOR PRIVATE USE $300

SPECIAL FOURTH CLASS MAIL
Book

POSTAGE AND FEES PAID
NATIONAL AERONAUTICS AND
SPACE ADMINISTRATION
NASA-451

U.S.MAIL

POSTMASTER: If Undeliverable (Section 158 Postal Manual) Do Not Return

NASA CONTINUING BIBLIOGRAPHY SERIES

NUMBER	TITLE	FREQUENCY
NASA SP--7011	AEROSPACE MEDICINE AND BIOLOGY Aviation medicine, space medicine, and space biology	Monthly
NASA SP--7037	AERONAUTICAL ENGINEERING Engineering, design, and operation of aircraft and aircraft components	Monthly
NASA SP-7039	NASA PATENT ABSTRACTS BIBLIOGRAPHY NASA patents and applications for patent	Semiannually
NASA SP--7041	EARTH RESOURCES Remote sensing of earth resources by aircraft and spacecraft	Quarterly
NASA SP-7043	ENERGY Energy sources, solar energy, energy conversion, transport, and storage	Quarterly
NASA SP-7500	MANAGEMENT Program, contract, and personnel management, and management techniques	Annually

Details on the availability of these publications may be obtained from:

SCIENTIFIC AND TECHNICAL INFORMATION OFFICE

NATIONAL AERONAUTICS AND SPACE ADMINISTRATION

Washington, D.C. 20546