(NASA-CR-148741) AN AUTOMATED SYSTEM FOR CHROMOSOME ANALYSIS. VOLUME 1: GOALS, SYSTEM DESIGN, AND PERFORMANCE Final Report (Jet Propulsion Lab.) 137 p HC $6.00 CSCL 06B G3/51

N76-30785

Unclas 50271

[redacted]

JET PROPULSION LABORATORY

CALIFORNIA INSTITUTE OF TECHNOLOGY

PASADENA, CALIFORNIA

AN AUTOMATED SYSTEM FOR CHROMOSOME ANALYSIS

VOL. I. GOALS, SYSTEM DESIGN, AND PERFORMANCE

(FINAL REPORT)

1200-240 June 30, 1975

Prepared for the
National Institute of Child Health
and Human Development

Principal Investigator

K. R. Castleman, Ph. D.
Senior Scientist
Jet Propulsion Laboratory
4800 Oak Grove Drive
Pasadena, California 91103
Telephone: (213) 354-5660

Co-Investigator

J. H. Melnyk, Ph. D., Director,
Department of Developmental Genetics
City of Hope Medical Center
Duarte, California 91010
Telephone: (213) 359-8111 Ext. 711

JET PROPULSION LABORATORY
CALIFORNIA INSTITUTE OF TECHNOLOGY
PASADENA, CALIFORNIA

FOREWORD

This is the final report on NIH/NASA Interagency Agreement No. 1-Y01-HD-30001-00, a Contract Program to produce an Automated System for Chromosome Analysis. This report covers the period of February 1, 1973 through April 30, 1975. It is supplied to the National Institute of Child Health and Human Development (NICHD) as required under the interagency agreement.

This report is produced in two volumes for convenience of distribution. Volume I describes the goals of the program and the system design and performance. Volume II details the construction, programming, operation and maintenance of the system; it should be required only by persons wishing to operate, maintain or modify the system or to duplicate it in whole or in part. Distribution of Volume II is controlled by the Project Officer at NICHD. This two-volume report provides complete technical documentation of all work performed under the interagency agreement.

A portion of the work, the development of a semi-automated specimen preparation unit and the coordination of the clinical test program, was performed at the City of Hope National Medical Center in Duarte, California under a subcontract from JPL.

This report contains contributions from and reflects the dedicated efforts of Howard Frieden, Joe Fulton, Larry Goforth, Sayuri Harami, Greg Jirak, Elbert Johnson, Arnold Kochman, Shirley Quan, Gary Persinger, Linda Ravene, Paul Rennie, Ray Wall, and Gary Yagi.

CONTENTS

I. INTRODUCTION 1-1

A. HISTORY OF AUTOMATED CHROMOSOME ANALYSIS . . . 1-1

B. HISTORY OF CONTRACT 1-2

C. GOALS AND SCOPE OF CONTRACT 1-2

D. APPROACH TO REQUIREMENTS AND SOLUTION 1-3

E. SUMMARY OF ACCOMPLISHMENTS 1-4

II. SYSTEM REQUIREMENTS 2-1

III OVERALL SYSTEM DESIGN 3-1

A. GENERAL PHILOSOPHY 3-1

B. SYSTEM OPERATION 3-7

C. HARDWARE ARRANGEMENT AND PHYSICAL LAYOUT . . 3-15

SPECIMEN PREPARATION UNIT 4-1

A. DESIGN AND OPERATION 4-1

B. COMPARISON WITH MANUAL METHOD 4-11

COMPUTER AND PERIPHERAL EQUIPMENT 5-1

A. COMPUTER 5-1

B. PERIPHERAL EQUIPMENT 5-1

SPECIAL PURPOSE HARDWARE 6-1

A. MICROSCOPE/STAGE SYSTEM 6-1

B. IMAGE DIGITIZING SYSTEM 6-9

C. SPREAD DETECTION AND AUTO-FOCUS HARDWARE . . . 6-16

D. INTERACTIVE GRAY-LEVEL DISPLAY UNIT 6-25

E. HARDCOPY PICTORIAL OUTPUT DEVICE 6-30

PRECEDING PAGE BLANK NOT FILMED

CONTENTS (contd)

VII. SYSTEM SOFTWARE 7-1

A. OVERVIEW 7-1

B. SUPERVISOR 7-1

C. SLIDE SEARCH SOFTWARE 7-4

D. CHROMOSOME ANALYSIS ALGORITHMS 7-6

E. ANALYSIS PROGRAMS 7-10

F. OUTPUT GENERATION 7-15

G. STATISTICAL ANALYSIS 7-15

H. MAINTAINANCE AND CALIBRATION 7-15

VIII. SYSTEM PERFORMANCE 8-1

A. INTRODUCTION 8-1

B. SPECIMEN PREPARATION UNIT 8-1

C. IMAGE DIGITIZER 8-7

D. COMPUTER CONTROLLED MICROSCOPE STAGE 8-18

E. SPREAD DETECTOR/AUTOFOCUS UNIT 8-19

F. KARYOTYPING PERFORMANCE 8-20

IX. CONCLUSION 9-1

A. GENERAL 9-1

B. SYSTEM COST 9-1

C. FURTHER WORK 9-2

X. REFERENCES 10-1

SECTION I

INTRODUCTION

A. HISTORY OF AUTOMATED CHROMOSOME ANALYSIS

For at least twelve years, research has been in progress to automate the analysis of human chromosomes. Government-sponsored research has produced several laboratories in which computer systems for chromosome analysis have been developed. The scientific literature contains numerous descriptions of hardware and algorithms for human chromosome analysis, and several reports on application studies (see Ref. 1 for a review). However, automatic chromosome analysis is, at the present time, still restricted to the realm of pattern recognition research. No large-scale clinical or cytogenetics research program currently uses automated analysis. The various research-based automated systems show impressive performance in test studies, but have yet to find their way into routine usage.

For automation to earn a role in the practice of cytogenetics, it must (1) satisfy the actual day-to-day needs of the practicing cytogeneticist, and (2) show some advantage over manual techniques. This advantage can be in terms of speed, which reflects itself in cost-savings per specimen processed and/or in the generation of useful new quantitative data.

Economic analyses aimed at evaluating the usefulness of automatic chromosome analysis often produce conflicting results. These discrepancies are due to differences in the fundamental assumptions of the economic exercise. This disagreement upon fundamentals result from (1) variations in the actual practice of cytogenetics at various laboratories, (2) poor knowledge of the actual long-term cost of high-volume manual karyotyping, (3) variations in emphasis of the various systems under development, (4) variations in the assumed cost of construction, amortization and operation of the automated system, and (5) variations in the assumed volume and performance accuracy

of the system under actual clinical conditions. Long-term system accuracy is particularly difficult to evaluate since it is intimately tied to spread preparation quality, but in a manner difficult to quantify.

B. HISTORY OF CONTRACT

In 1970, a meeting was held to assess the directions in which cytogenetics would move during the next ten years (see Ref. 2). This conference brought out the fact that automation appears to be sufficiently advanced to take over at least part of the workload in cytogenetics laboratories. In view of this and the tremendous amounts of money and effort that have been devoted to automatic chromosome analysis in the past, the NICHD initiated a contract program to move automated chromosome analysis out of the pattern recognition research laboratory and into the clinical environment. This was done to determine the actual usefulness of current technology in a clinical setting and to pinpoint those areas where further development is needed.

The NICHD issued a request for proposals (RFP) setting forth the requirements for a prototype clinical system for chromosome analysis (see Ref. 3). JPL responded with a proposal to translate an existing research-based system for automated chromosome analysis into a stand-alone prototype system intended for clinical use and to test that system on clinical material (see Ref. 4). The contract was awarded to JPL via NIH/NASA Interagency Agreement No. 1-Y01-HD-30001-00.

C. GOALS AND SCOPE OF CONTRACT

The Scope of the contract includes the design, construction, and testing of a complete system to produce karyotypes and chromosome measurement data from human blood samples, and to provide a basis for statistical analysis of quantitative chromosome measurement data. The prototype was to be assembled from equipment purchased with contract funds, tested and evaluated on clinical material and thoroughly documented. It was anticipated that the instrument would prove valuable in clinical usage and would be replicated, in whole or part, for use by other institutions.

D. JPL APPROACH TO REQUIREMENTS AND SOLUTION

JPL's approach to meeting the contract goals was as follows:

1) Analyze current clinical practice to establish the required inputs and products of the system.
2) Define a system to provide the required products.
3) Define the functional requirements of the various subsystems.
4) Select or design the various subsystems in a cost-effective manner with a preference for commercially available equipment.
5) Integrate the subsystems into a working unit.
6) Test the unit for engineering performance.
7) Test the unit on clinical specimens.
8) Document the design and performance of the system and otherwise encourage its further use and replication.

Utilization of existing technology was chosen as the fastest and most efficient way of answering the questions: What part of the cytogenerics workload can now be taken over by automation? and Where is further development required? Such a program required a technology freeze at 1973 levels and provided for little development of new technology. The resulting system, however, is easily upgraded to incorporate new hardware and software as they become available. Such upgrading is discussed in Section IX.

The primary function of the system is to produce karyotypes and chromosome measurement data efficiently and at low cost per cell. However, the practice of cytogenetics includes a wide range of activities aimed at answering different clinical and research questions. Therefore, the system was designed to be as flexible as possible in operation and thus adaptable to a wide variety of cytogenetics tasks. While this necessarily complicates its operation somewhat, it makes the system much more powerful for evaluating the potential role of automation in cytogenetics.

The various tasks involved in cytogenetics may be roughly divided into those which are routine and mechanical and those which require judgment,

reasoning, or deduction. Computer technology has demonstrated its value in tasks of the first kind and even in decision making on the basis of statistical knowledge. The field of artificial intelligence, however, is still facing much more elementary problems with reasoning tasks. Therefore current computer science technology is much more likely to assist cytogenetics in a labor-saving role than in one which currently requires a high order of human intelligence. The era of autonomous computer diagnosis or scientific deduction by machine appears distant at best. However, if automation can significantly increase the volume and reduce the cost of cytogenetic analysis while injecting quantitation, it can make practical many studies which will provide human scientists with the data required to advance the state of scientific knowledge. The system described in this report was developed as such a tool.

E. SUMMARY OF ACCOMPLISHMENTS

This contract program has produced a compact, self-contained prototype automated karyotyping system. Current hardware and software technology has been packaged for application to clinical and research cytogenetics. This relatively inexpensive system (approximately $127,000 hardware cost) forms a test bed upon which to evaluate the usefulness of current technology in the clinical and research environments. Tests which have been conducted on the system establish a performance baseline which may be used to assess the applicability of current technology and point out fruitful directions of further development.

The system operates smoothly and efficiently without serious production bottlenecks. Cytotechnicians are readily trained to operate the system. Operation of the unit is flexible enough that the operator seldom finds it inconvenient to do any karyotyping related task. Operator fatigue and boredom have not proven to be problems.

The accuracy of the system generally meets our expectations, but the time required per karyotype is somewhat above our initial goals, particularly with banded specimens. The reasons for this are now apparent and significant improvements are within reach.

The system produced under this contract represents current chromosome analysis technology packaged for clinical application. It is a significant step toward moving automated chromosome analysis technology out of the pattern recognition research laboratory and into the realm of clinical genetics and cytogenetics research. It is ready for routine usage, further testing and evaluation, or further development as desired. Later sections detail design and performance. This program has yielded valuable insight into the clinical value of current automated chromosome analysis technology.

SECTION II

SYSTEM REQUIREMENTS

In this section, we set forth the functional requirements of the automated system for chromosome analysis, as follows:

1) Compatibility. The system should be compatible with current practice and produce high resolution pictorial karyotypes, chromosome counts, and chromosome measurement statistics, and facilitate detection of chromosomal abnormalities. The equipment should be compatible with the clinical and research laboratory environment.
2) Versatility. The system should provide options to make it flexible enough to accommodate variations in specific cytogenetic practice. It should optionally provide for the preparation and analysis of banded or homogeneously stained specimens. It should be applicable both for detailed analysis of chromosome morphology and for mass screening purposes.
3) Speed. The system should provide significant time-savings in processing cytogenetic specimens without sacrificing accuracy.
4) Economy. System cost should not be prohibitive in terms of performance. In particular the unit should consist of less than $150, 000 worth of equipment. Furthermore, the cost per cell analyzed should be significantly lower than current manual techniques.
5) Accuracy. The system should produce pictorial karyotypes and chromosome statistics with high overall accuracy. Classification error rates should be low enough so as not to impair the efficiency of the system or the usefulness of the pictorial karyotypes. For homogeneously stained and banded chromosomes, the system should produce accurate karyotypes without excessive human interaction.

REPRODUCIBILITY OF THE ORIGINAL PAGE IS POOR

6) Replicability. The system should be easily replicated by other laboratories and commercial concerns competent in electronics, digital systems, and computer programming. The system should consist, insofar as possible, of commercially available subsystems with a minimum of specially constructed hardware. The design and construction of the system should be well documented to facilitate replication of the system by other users. It is anticipated that this prototype system will be the first step toward proliferation and perhaps commercial production of similar units.

SECTION III

OVERALL SYSTEM DESIGN

A. GENERAL PHILOSOPHY

This section gives an overview of system design and operation. The component subsystems are discussed in detail in later sections. The major components of the system are shown in Fig. 3-1. They are the spread preparation unit, the automated microscope, and the computer system.

The specimen preparation system accepts suitably identified blood samples and produces stained metaphase chromosome spreads on glass slides. Optionally, the slides can be prepared by the homogeneous Giemsa staining technique or by the trypsin-Giemsa banding technique. Slides are produced with patient identification marks. The operation of the spread preparation unit is referred to as semiautomatic because it is essentially an assembly line, batch processing implementation of current spread preparation techniques.

The automated microscope accepts slides prepared by the specimen preparation unit (or conventional manual technique) and locates metaphase spreads on the slide. With operator assistance, the best spreads are selected and digitized.

The digitized spread images are fed to the computer system which locates and measures the chromosomes, classifies them by group or by type, and prepares a digital karyotype image. This image is converted to pictorial form and constitutes the primary output of the system. Chromosome measurement data is filed in an interactive data base for subsequent statistical analysis. Suspect chromosomes, those with abnormal measurements, are flagged on a pictorial karytotype. After the processing of the last cell for each patient is complete, the system prepares a patient report summarizing the result of the analysis and listing suspected abnormalities. In addition, the system affords options to suppress certain outputs and to produce additional data outputs as desired for

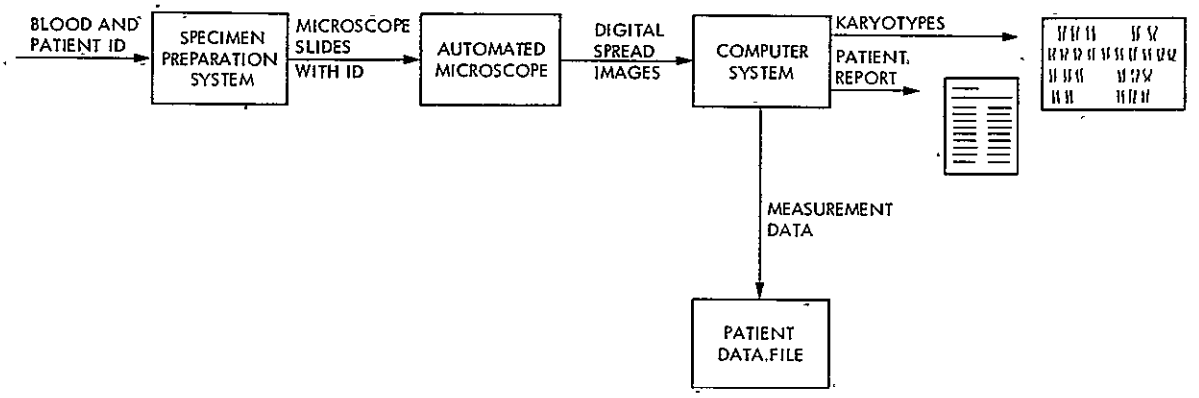

Fig. 3-1. Major system components

these specific applications. Figure 3-2 illustrates two forms of pictorial output for a banded chromosome spread.

The upper image pair shows the raw spread image, with each chromosome marked with the sequence number assigned it by the object location program, on the left and the computer produced karyotype on the right. The lower image pair is an optional output format in which the chromosome images in the karyotype are replaced by staining profiles. The profiles are normalized to fill the rectangle occupied by the corresponding chromosome. Thus, the width difference in the profiles of the two C-6 chromosomes results only from the curvature of chromosome 41 which makes it fill a wider slot.

Negative object numbers above a chromosome indicate that its centromere position has been adjusted by the operator. The date and time on the lower left indicate when the spread image was digitized while the lower right tells when the output image was generated. These pictures were made from a cell image that had been saved on disk for several weeks. Section IX discusses details of how Fig. 3-2 was reproduced.

This output format closely matches its manually produced counterpart in contemporary cytogenetics practice. This type of display allows the cytogeneticist to verify the accuracy of the karyotype produced by the system under the control of the operator. Thus, questions may be resolved long after karyotyping has been done without recourse to reexamination of the microscope slide. This reduces the impact of automation upon the practice of cytogenetics by requiring a minimum change of operating procedure. This, in turn, should reduce the amount of retraining and restaffing required for conversion of a laboratory to automation and thereby encourage acceptance by the medical community. Without the generation of a high resolution karyotype, cytogeneticists would be unable to examine the chromosome images for previously undefined abnormalities. Thus, only those abnormalities for which specific tests had been programmed would be detectable. The cytogeneticist would have to accept the output of the system at face value or laborously recheck each cell through the microscope. The latter alternative would undermine the economic justification of the automated system.

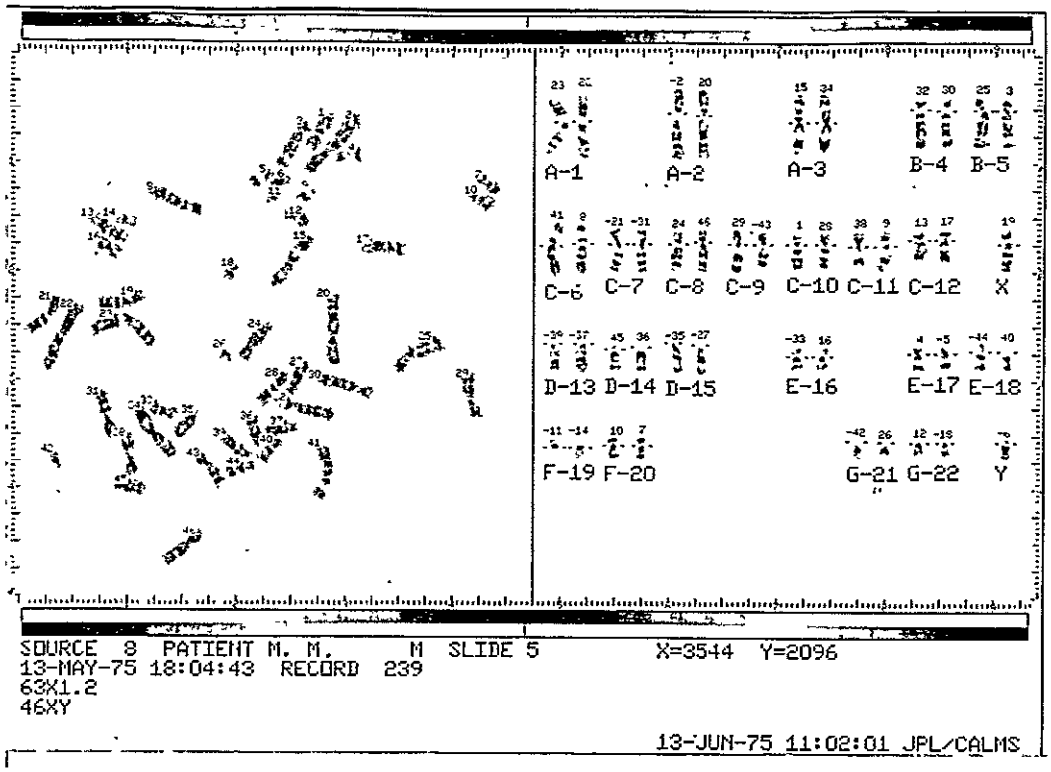

Fig. 3-2a

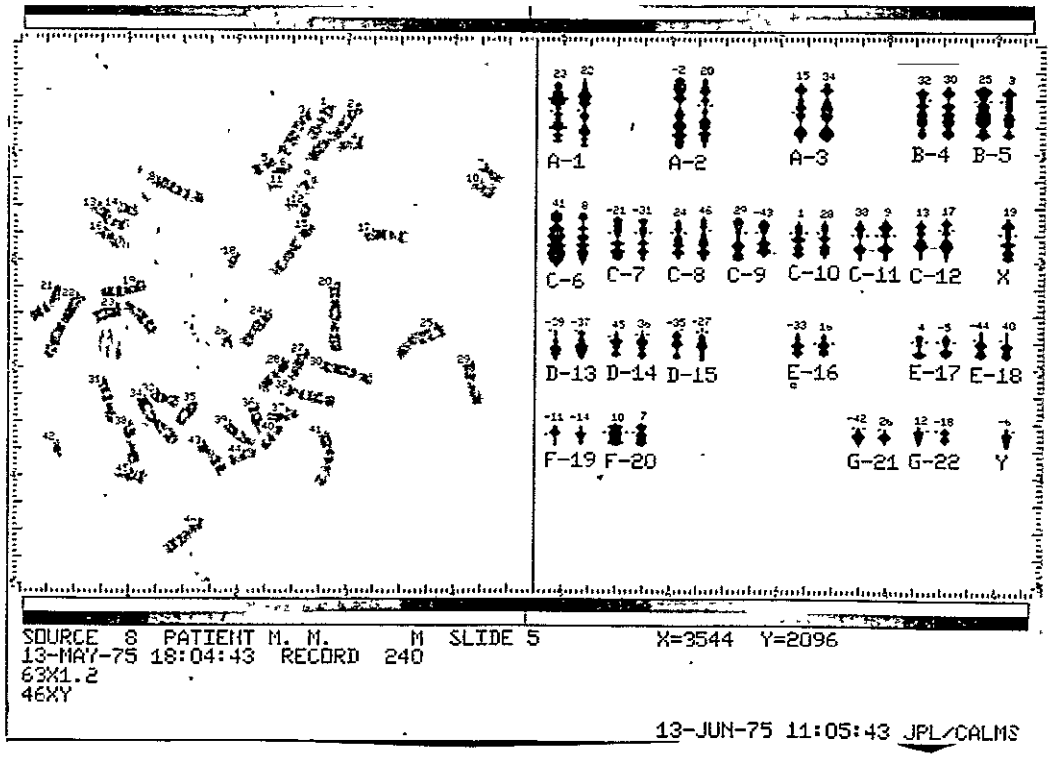

Fig. 3-2b. System output

REPRODUCIBILITY OF THE
ORIGINAL PAGE IS POOR

Figure 3-3 shows the hardware configuration chosen to implement the automated microscope and computer system of Fig. 3-1. The components to the right of the minicomputer are pieces of standard computer peripheral equipment. Those on the left are nonstandard units which are purchased or built and then interfaced to the computer.

The microscope stage is moved by computer controlled motors to implement automatic slide search and automatic focusing. The stage joystick affords operator control of stage motion, while the stage keyboard allows control of the slide search. A closed circuit TV camera on the microscope provides video to the operator's monitor, the spread detector and autofocus unit, and the image digitizing system.

Sixty times each second, the spread detector and autofocus unit transfers into the computer parameters which indicate (1) the presence or absence of a metaphase spread under the objective and (2) the focal sharpness of the image. These parameters allow the computer to detect metaphases and focus the microscope automatically.

The image digitizing system converts the optical image of a metaphase spread into numerical form for analysis by the computer. The gray level display allows the operator to view digital images produced by the computer. The joystick controls the position of a cursor on the display screen. This allows the operator to point out, to the computer, objects in the image. The hardcopy output device converts digital images from the computer into permanent pictorial format. It is the primary output device of the system.

The magnetic tape unit is used for storage of statistical data and certain images, and for communication with other computers. The magnetic disk system stores programs and intermediate data during processing. The keyboard/printer is used for operator communication with the machine and the line printer for listing patient reports and statistical data.

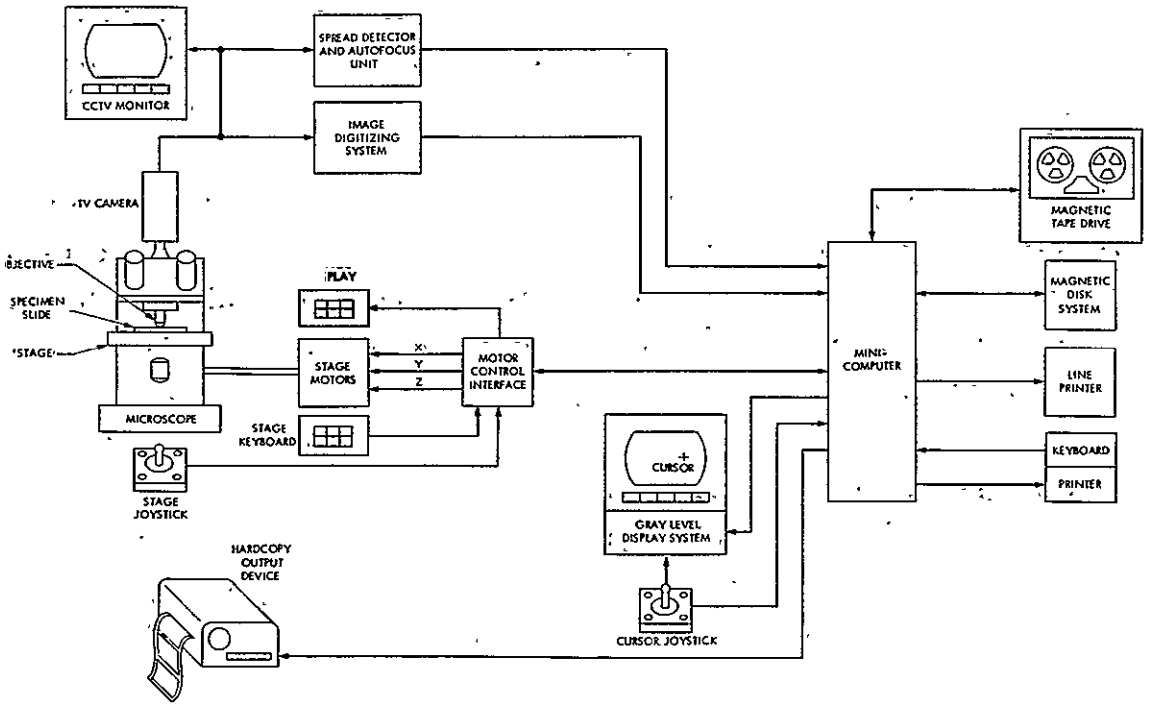

Fig. 3-3. System configuration

B. SYSTEM OPERATION

1. General

The overall operation of the system is similar to that of our research based automatic karyotyping system described in Ref. 1. In this section we present the operation of the system by following one specimen completely through the process.

The first step is slide preparation. This is done by standard techniques for both homogeneous Giemsa and trypsin-Giemsa banded preparations. The process has been semi-automated and is carried out in a "batch processing" mode. Culture trays with 12 wells carry 12 specimens through the process at a time. The process is described in Section IV.

The specimen preparation system has a maximum throughput volume of 576 specimens per day. This allows a large number of samples to be taken in a short period of time and processed into a stable form (fixed stained slides) in which they can be saved for analysis at a later time. In this sense, there is a natural division between the operation of the specimen preparation unit and the automated microscope.

In production, the operation of the automated microscope is described with reference to Fig. 3-4. The operation is divided into four major activities, slide search (spread selection), scanning, spread analysis, and output generation.

The first step involves automatically searching the slide to locate individual spreads suitable for analysis. Once a suitable spread is located and positioned under the objective it is scanned into the computer. This process digitizes the spread image, converting it into a rectangular array of sampled, quantized optical density measurements.

The next step is the analysis of the digital spread images. Computer programs locate, measure, and classify the individual chromosomes and then

arrange their images into the format of a karyotype. In the final step, the computer-produced digital karyotype image is converted into visible form by a special photographic recorder (the hardcopy output device). The resulting computer-produced karyotype is equivalent to its manual counterpart in appearance and resolution, and can be interpreted in the conventional way.

The steps outlined above produce a high quality karyotype image from metaphase spreads on microscope slides. In terms of inputs and products, the technique is identical to its manual counterpart.

2. Overlapped Operation

For any one metaphase spread, the steps in Fig. 3-4 must be performed sequentially. However, it is convenient to divide the process into the three separate activities of (1) search and scan, (2) analysis, and (3) pictorial output. To optimize the performance of the system, it is necessary to overlap these three operations and allow them to proceed simultaneously. For example, after the first spread has been located and scanned, its analysis can proceed simultaneously with the search for the next spread. In fact, at any one time the analysis of one spread can occur simultaneously with the output of the previous karyotype and the search for the next spread. Thus, the process can be thought of as an assembly line having three stations.

The flow of system operation is diagramed in Fig. 3-5. Slide search consists of two phases: search and edit. The initial slide search is done at low power (currently 40X or 63X) and is fully automatic. Without operator intervention the computer exercises the microscope stage in a rectangular search pattern while the automatic metaphase detector monitors the video signal for the presence of metaphase spreads. When a spread is encountered, the current XY stage coordinates are automatically logged into a metaphase queue. By this prcess the computer automatically builds up a list of stage coordinates having metaphase spreads.

In the editing phase of slide search, the computer automatically returns the stage to each of the previously logged positions to allow the operator to

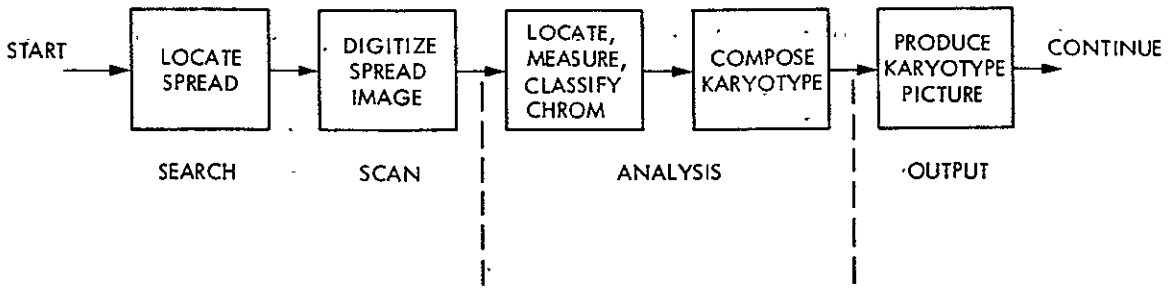

Fig. 3-4. Automated chromosome analysis

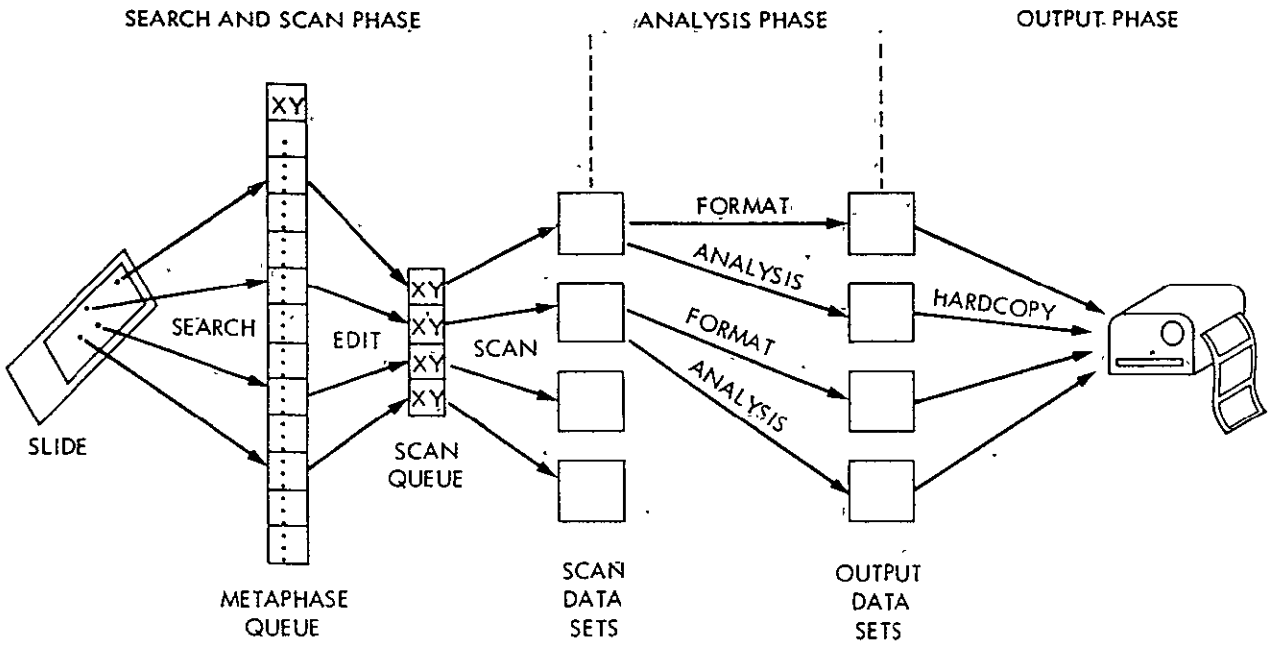

Fig. 3-5. Flow of system operation

view the detected cells. The operator may either reject the spread as unsuitable for analysis, accept it for a karyotyping, or accept it for chromosome counting purposes only. Accepted spreads are centered beneath the objective by use of the stage control joystick. He then changes to high power (100X) for scanning. Again, the computer returns the stage to the location of those metaphases which were accepted by the operator at low power. The stage coordinates remaining in the queue after the editing phase constitute the scanning queue.

When the operator terminates the queue editing procedure, the system goes into the scanning mode. Without further operator assistance, it returns to the spread coordinates in the scanning queue, automatically focuses the image, and digitizes the spread image into a scan data set, if one is available. After the spreads in the scanning queue have all been digitized, the search program reverts to the automatic metaphase finding mode. This process can continue indefinitely until terminated by the operator. The net effect is to keep the scan data sets full of digitized spread images. Notice that operator intervention is required only for queue editing and not for searching or scanning.

The second phase of the operation is analysis. As soon as the supervisor program detects the presence of a spread image in one of the scan data sets, it begins the analysis. If the cell has been labeled "count only" by the operator, the chromosomes are located, counted, and displayed to the operator for verification. However, if the cell is to be karyotyped, the spread image is reformatted into a form suitable for the hardcopy output device and written into one of the output data sets. Ten programs are then loaded in sequence and executed to effect the karyotype analysis of the cell. These programs locate the chromosomes, orient them, extract measurements, classify the chromosomes, and compose the digital karyotype. At two points in the analysis, the operator is asked to verify the accuracy of these operations. After the chromosomes have been isolated, they are displayed on the interactive gray-level display device along with their sequence numbers to allow the operator to correct cases of chromosome touching and fragmentation. The karyotype is also displayed to allow the operator to verify correct classification. After the karyotype has been approved by the operator, it is formatted for output and copied into one of the output data sets.

The analysis phase processes cell images one at a time from raw spread image to digital karyotype. As soon as the karyotype for one spread is written in an output data set, the sequence starts over on the spread image in the next scan data set. The process continues as long as there are unprocessed spread images and output data sets available.

As soon as a properly formatted image is available in one of the output data sets, the hardcopy output program begins the transfer, line by line, to the pictorial output device. This unit requires 2 1/4 minutes for complete output of the 1000 x 1000 point picture. As soon as one picture is complete, it begins output of the image in the next output data set.

The three functions of search and scan, analysis, and pictorial output operate asynchronously and independently of each other, with each one passing spreads to the next. In production, assume that the average time required for search and scan is under 4 minutes as is the time required for analysis, including operator interaction. This means that cells can be processed at an average rate of one every 4 minutes. Even though, perhaps, 12 minutes of activity are required for each cell, each cell spends 4 minutes at each of three stations along the assembly line. In this way, one cell is completed every 4 minutes.

3. Slide Search and Scanning

The operation of slide search and scanning is diagrammed in more detail in Fig. 3-6. After the operator starts the search, he may enter the patient identification and load the slide. The automatic metaphase finder then builds a queue of spread coordinates. The operator then edits this queue by flagging an centering those spreads which are acceptable for analysis. While the metaphas detector can find spreads, it exercises insufficient judgment to select cells for analysis. As soon as the queue has been edited, the program goes into the scanning mode. It automatically returns to, focuses and scans the spreads listed in the edited queue until either the queue is exhausted or the input data sets are all full. If the scan queue is empty, the operator may restart the process for more slide searching. If no input data set is available, it waits

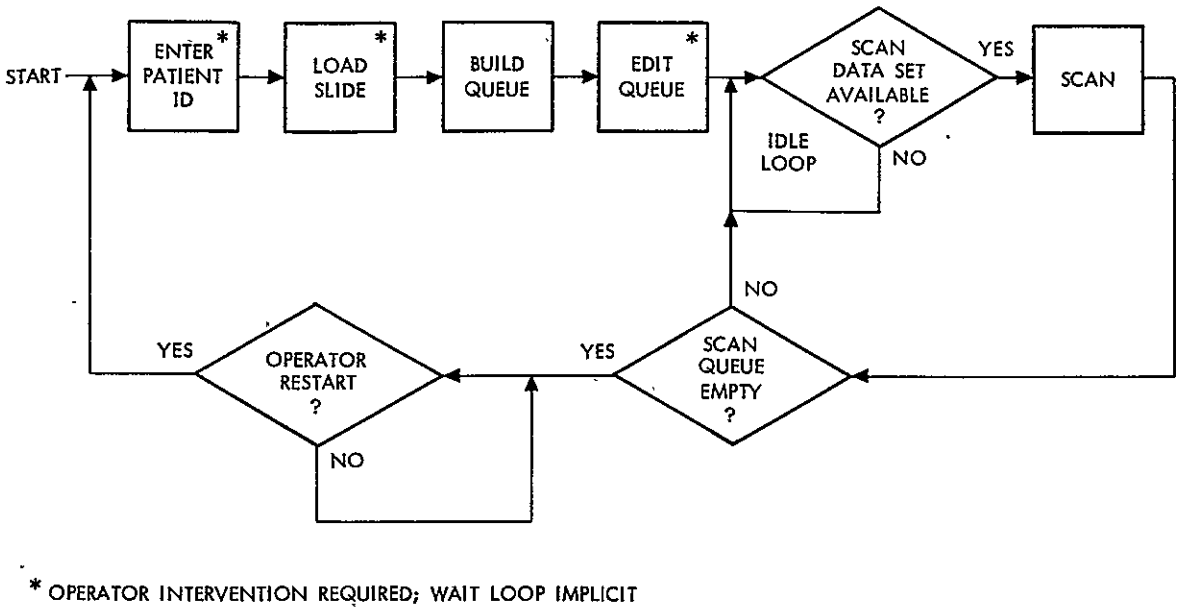

* OPERATOR INTERVENTION REQUIRED; WAIT LOOP IMPLICIT

Fig. 3-6. Operation of slide search and scanning

for one. Notice that, after slide mounting, operator intervention is required only in the queue editing phase.

4. Spread Analysis

The steps in the analysis phase are diagrammed in the Fig. 3-7. After starting, the program waits until an input data set containing a spread image is available. A series of programs then processes each spread through to completion before returning to start the next spread. The programs begin by isolating the chromosomes and displaying the spread to the operator with chromosome sequence numbers marked. At this point the operator may indicate chromosome touches or fragmentation errors for correction by the next program. The next series of programs measures and classifies the chromosomes and displays the karyotype for operator verification. The operator may indicate errors such as centromere location errors or misclassifications. Errors

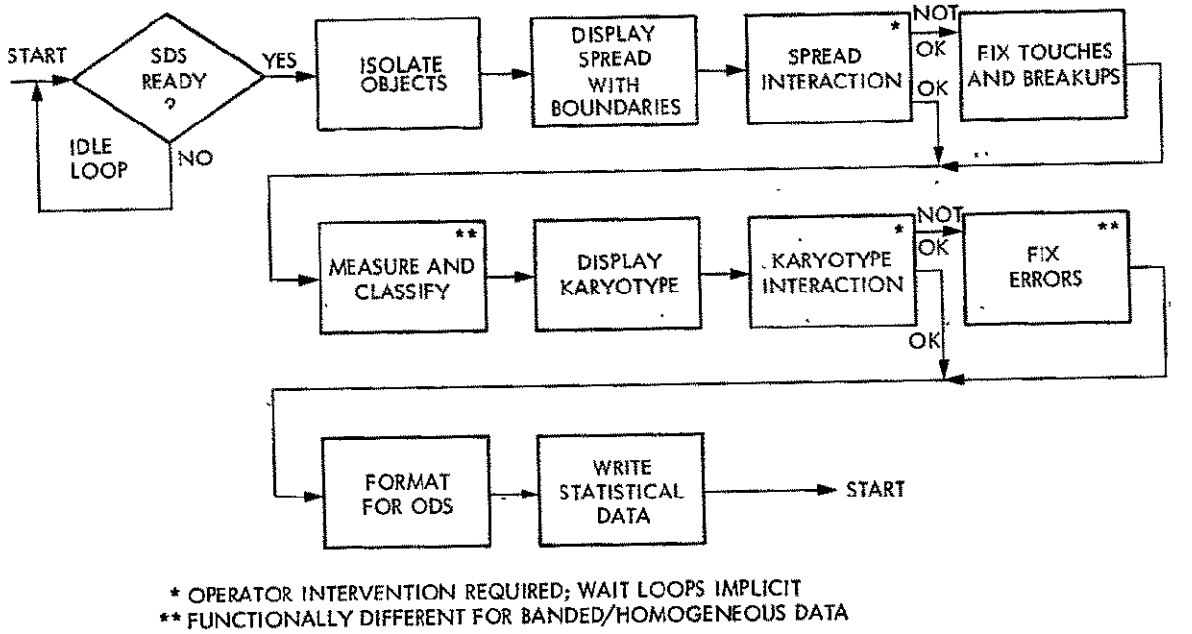

Fig. 3-7. Steps in the analysis phase

flagged by the operator are corrected by subsequent programs. Finally, a series of programs formats the approved karyotype, copies it into an output data set, writes the statistical data resulting from the analysis on magnetic tape and returns to begin the analysis of the next cell. As noted before, operator interaction is required at two points in the analysis. Since the system can optionally process homogeneous or banded data, several of the programs exist in two versions.

5. Hardcopy Output

The operation of the hardcopy output phase is shown in Fig. 3-8. This program simply waits until an output data set is available and buffers it, line by line, to the pictorial output device. No operator intervention is required.

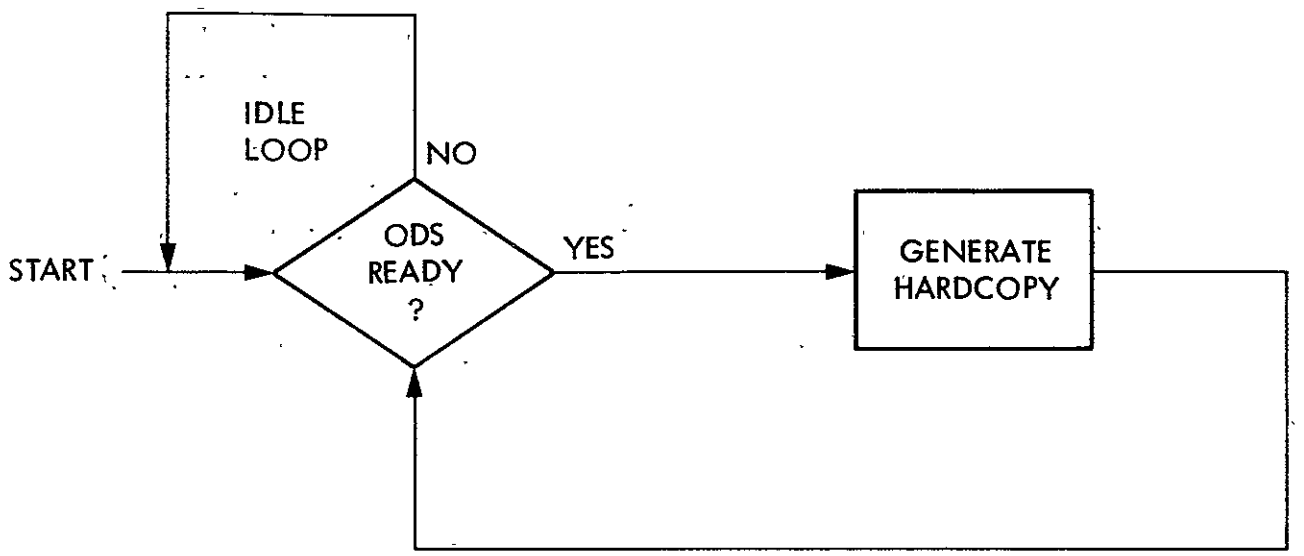

Fig. 3-8. Operation of the hardcopy ouput phase

6. Memory Partitioning

The operation of slide search and scan, analysis, and pictorial output are programmed in three separate partitions of computer memory. They operate independently and asynchronously, waiting only for the operator or if no input or output data set is available. The analysis is executed as a background job and has lowest priority. The slide search is interrupt-driven and has intermediate priority. Pictorial output is interrupt driven with very low duty cycle and highest priority since the hardcopy device cannot be interrupted during the output of a picture. Since the scanning program computes sector histograms and thus requires large core buffers, it is executed between cell analyses and overlays the analysis partition. Since only 17 seconds is required per scan, this interruption contributes little to overall execution time.

REPRODUCIBILITY OF THE
ORIGINAL PAGE IS POOR

While scanning, the program computes gray-level histograms of 64 disjoint sectors of the image. These histograms are used to generate a map of background gray-level and chromosome contrast throughout the image. This map is used by the object location algorithm to set up spatially variable thresholds.

If the gray-level histogram of a scanned image indicates improper setting of the gray-scale digitizing range, the program can automatically correct the settings and initiate a rescan.

In the analysis partition, extensive use is made of program overlays. New programs are called in to overlay their predecessors. The programs communicate via the supervisor and in no case is it necessary to roll out a program during or after execution.

The parameters of the slide search (area of search, search pattern, number of spreads required, etc.) are entered at the time of daily initialization. The parameters then remain fixed indefinitely, but may be changed by the opeator at any time.

The following are restrictions upon the execution of various programs in the three partitions: (1) the scanning program cannot be loaded until the analysis of the current cell is complete; (2) once the scan program is loaded, analysis is locked out until scanning is finished; (3) the stage cannot be moved during scanning as this would destroy the image; and (4) the microscope slide currently being analyzed cannot be removed until all spreads in the scanning queue have been digitized.

C. HARDWARE ARRANGEMENT AND PHYSICAL LAYOUT

The physical layout of the system is shown in Figs. 3-9 and 3-10. This configuration affords the operator convenient usage of the system from one sitting position (excluding calibration, paper changes, etc.).

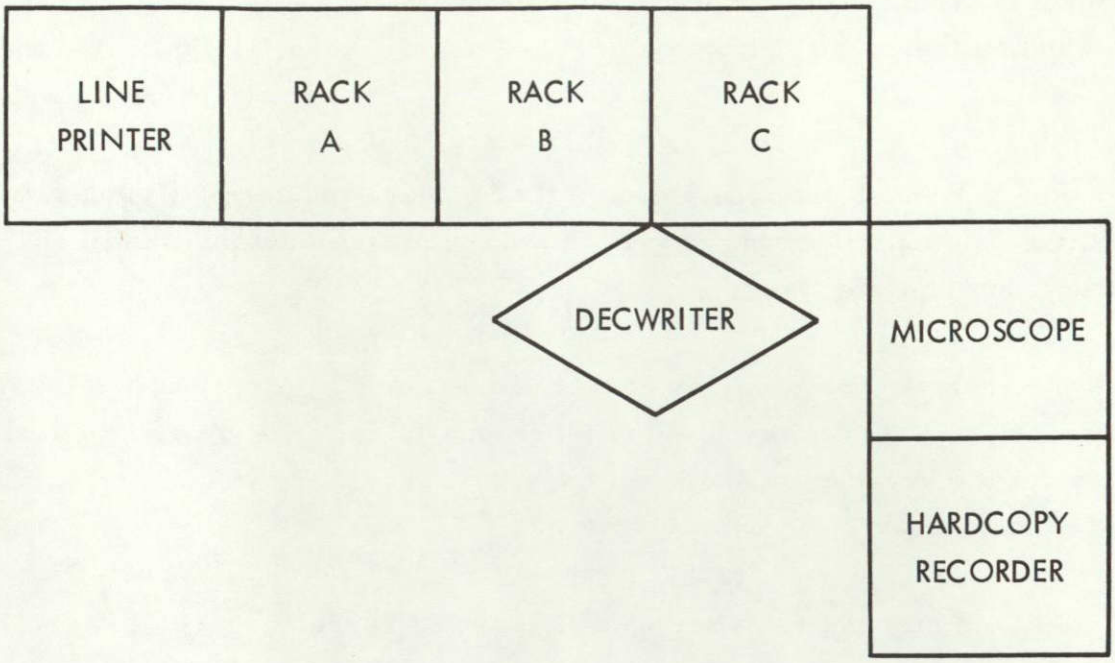

Fig. 3-9. System layout (top view)

Fig. 3-10. System layout (front view)

REPRODUCIBILITY OF THE
ORIGINAL PAGE IS POOR

SECTION IV

SPECIMEN PREPARATION UNIT

A. DESIGN AND OPERATION

This section describes in detail the design and operation of the semi-automated specimen preparation unit developed at the City of Hope Medical Center under a subcontract from JPL. It is a system for processing specimens of blood cultures for chromosome analysis. The components are built into a console (Fig. 4-1) designed to utilize space efficiently and to facilitate a smooth flow of operations from one step to the next. The concept of the system embodies three essential features:

1) Simplicity of operation.
2) Increased processing volume capability over manual operation.
3) Ease of reproducibility for manufacturers.

Wherever possible, commercially available components were selected for this system to simplify reproducibility. Components unavailable commercially were designed and fabricated by the Electronics Instrumentation Division at City of Hope Medical Center.

The components and their functions are described in this section in the order in which they are used in the system.

1. Culture Plate

The system is designed around a 12-well culture plate which was designed in the Department of Developmental Cytogenetics at City of Hope specifically for this project (Fig. 4-2). The plate is manufactured by Lab-Tek Corporation with a novel snap-off design which enables laboratories to select 4, 8, or 12 wells as required for the daily work load. With a little pressure, a basic unit of 4 wells can be separated.

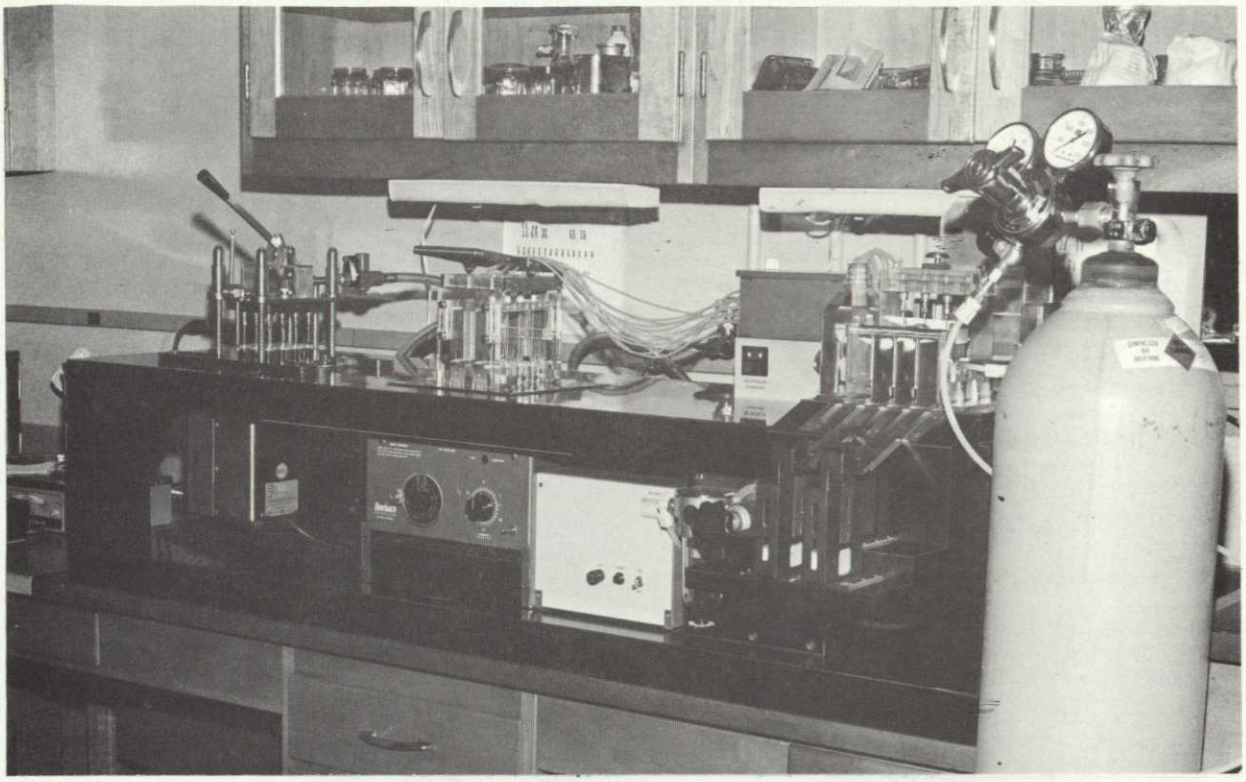

Fig. 4-1. Specimen preparation console

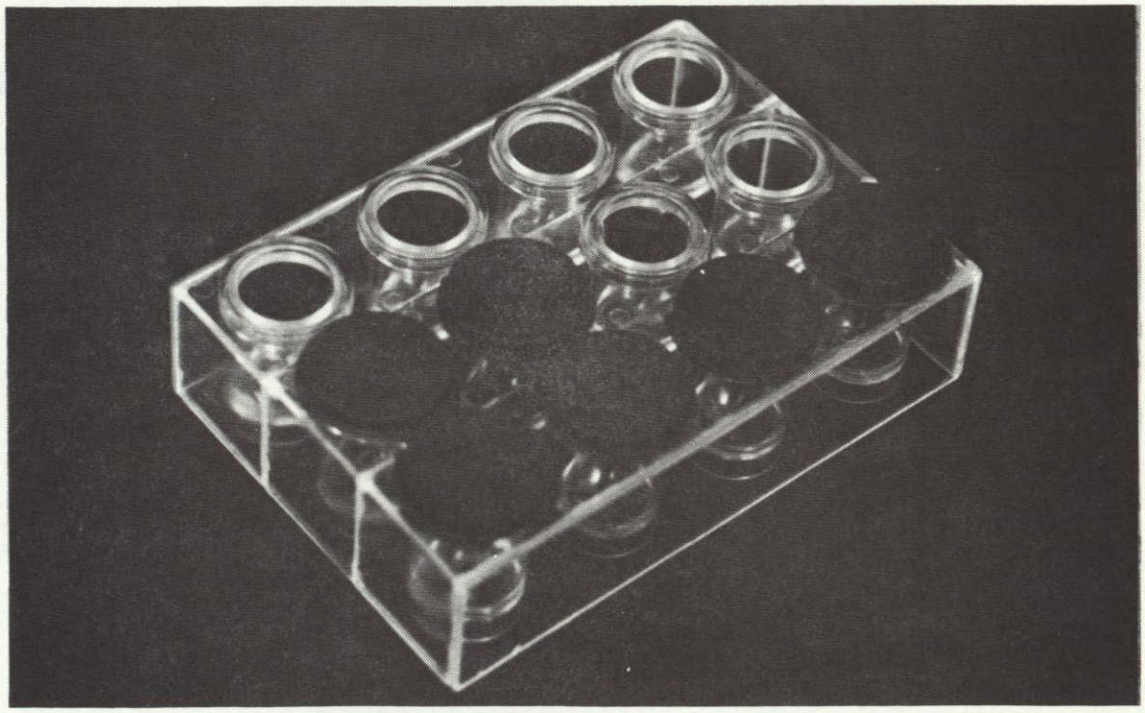

Fig. 4-2. Culture plate

REPRODUCIBILITY OF THE
ORIGINAL PAGE IS POOR

The culture plates are available as sterile plastic wrapped packages with sterile plastic snap-on caps. The dimensions of the plate are shown in Fig. 4-3. The wells hold 3 ml of fluid and are spaced 1-1/8 in. on center. This spacing is standard throughout the system.

2. Culture Medium Dispenser

The medium is pumped to a manifold containing 4 needles which are spaced to coincide with the wells (Fig. 4-4). The manifold used is sold under the name Polydrop. It has 8 needles spaced more closely than required for this project. It is used with alternate needles capped.

A Filamatic syringe pump dispenses culture medium. The syringe, tubing and associated hardware are autoclavable. All of the handling in this procedure is carried out under a laminar-flow hood to minimize contamination.

3. Centrifuge Carrier

A carrier for the culture plates in centrifugation was designed and fabricated as shown in Fig. 4-5. The carrier was made for the International Model UV centrifuge with a six-place head. Each carrier holds 2 stacked plates so that a total of 144 specimens can be centrifuged at one time.

4. Aspirator

Following centrifugation of the specimens, it is necessary to remove the supernatant. This is done by a 12-needle aspirator (Fig. 4-6) designed to match the dimensions of the culture plate. The base of the unit has stops and guides which center the culture plates as they are moved manually under the unit. The suction manifold is spring-loaded and a manually operated lever lowers the needles into the wells to a depth which is determined by a stop (the white Teflon cylinder) as it contacts the culture plate. Continuous vacuum is applied to the line and the supernatant is drawn off into a flask in 1-2 seconds. After aspiration, each culture tray is moved on and the lever is pulled again to lower the needles into an ultrasonic cleaner mounted underneath. Within a few

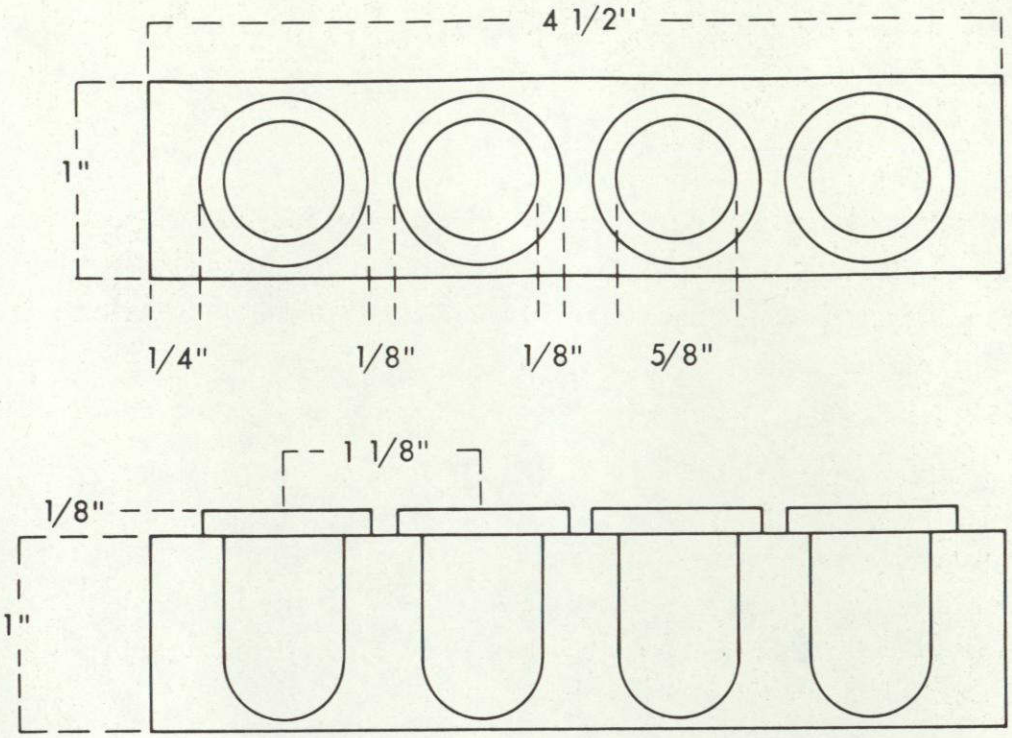

Fig. 4-3. Culture plate dimensions

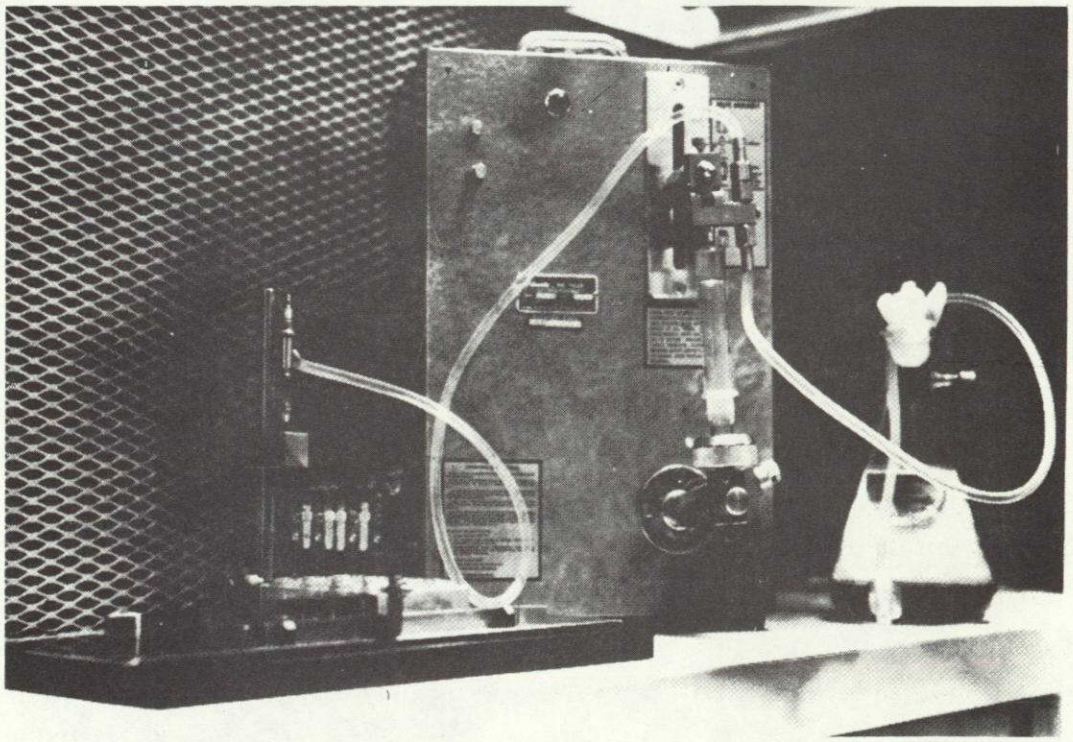

Fig. 4-4. Culture medium dispenser

REPRODUCIBILITY OF THE
ORIGINAL PAGE IS POOR

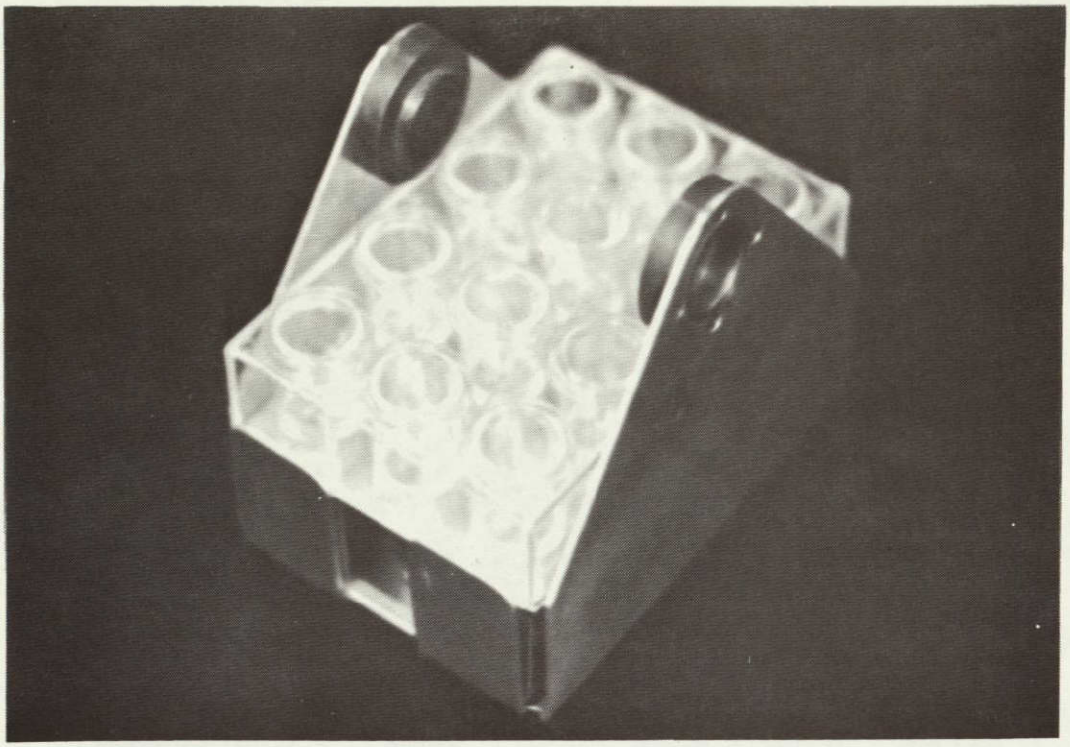

Fig. 4-5. Centrifuge carrier

seconds, any cellular material adhering to the needles is removed and the unit is ready to aspirate the next culture plate.

5. Fluid Dispenser (Hypotonic and Fixative)

After removal of the supernatant, there are several steps involving addition of hypotonic fluid and fixatives. This is accomplished by the dispenser (Fig. 4-7) which consists of three components: (1) a rectangular stand which supports 12 needles centered above the culture plate wells, (2) a peristaltic pump which moves the fluid from a reservoir to the needles, and (3) a shaker upon which the dispensing manifold is mounted. The shaker is turned on after aspiration to resuspend the cells and is kept in motion while the fluid is added.

The peristaltic pump controls fluid flow to the dispenser from drop by drop to a steady flow. Since slow fixation is essential to avoid excessive cell breakage, this variable flow control is of considerable importance.

REPRODUCIBILITY OF THE
ORIGINAL PAGE IS POOR

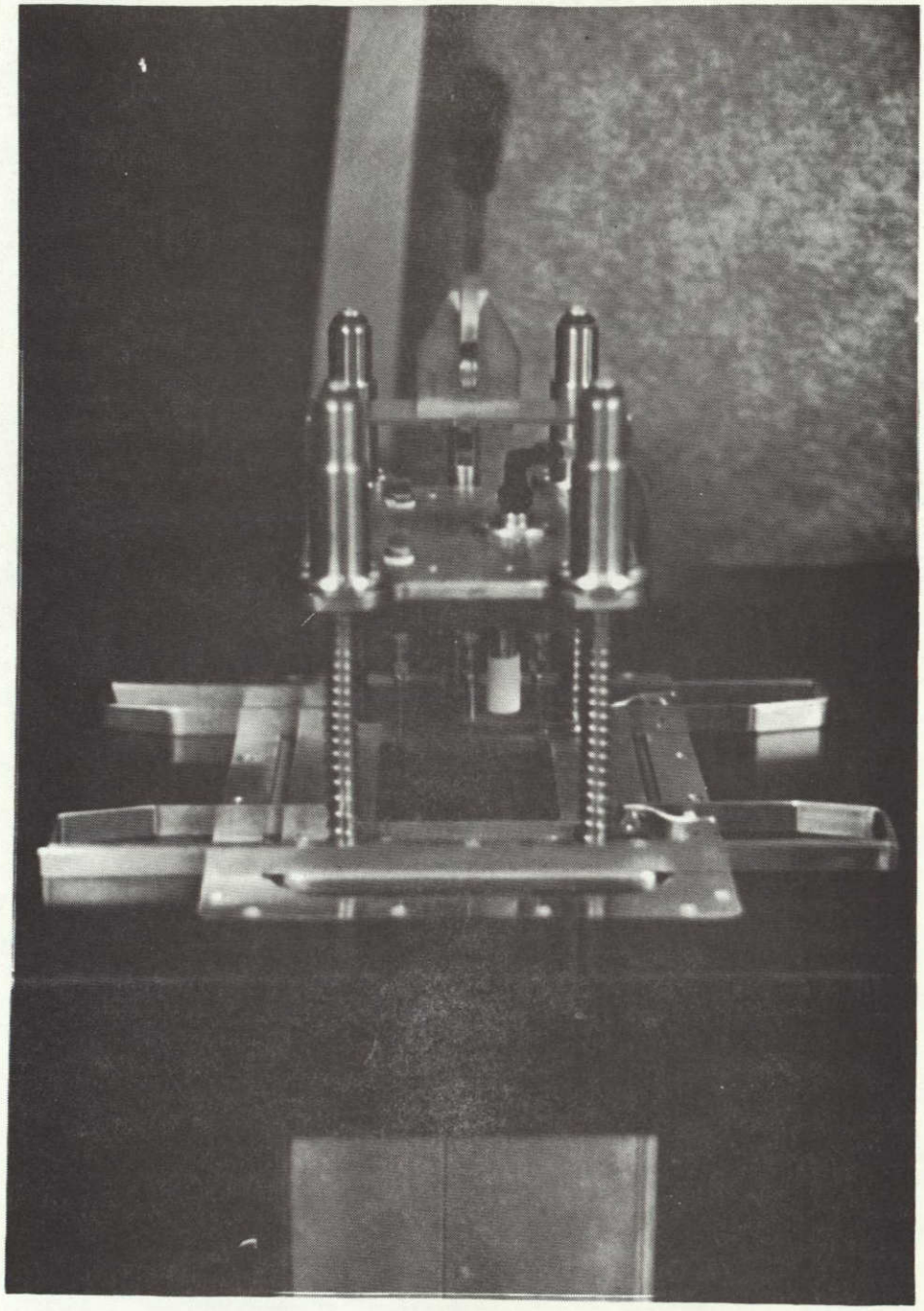

Fig. 4-6. Aspirator

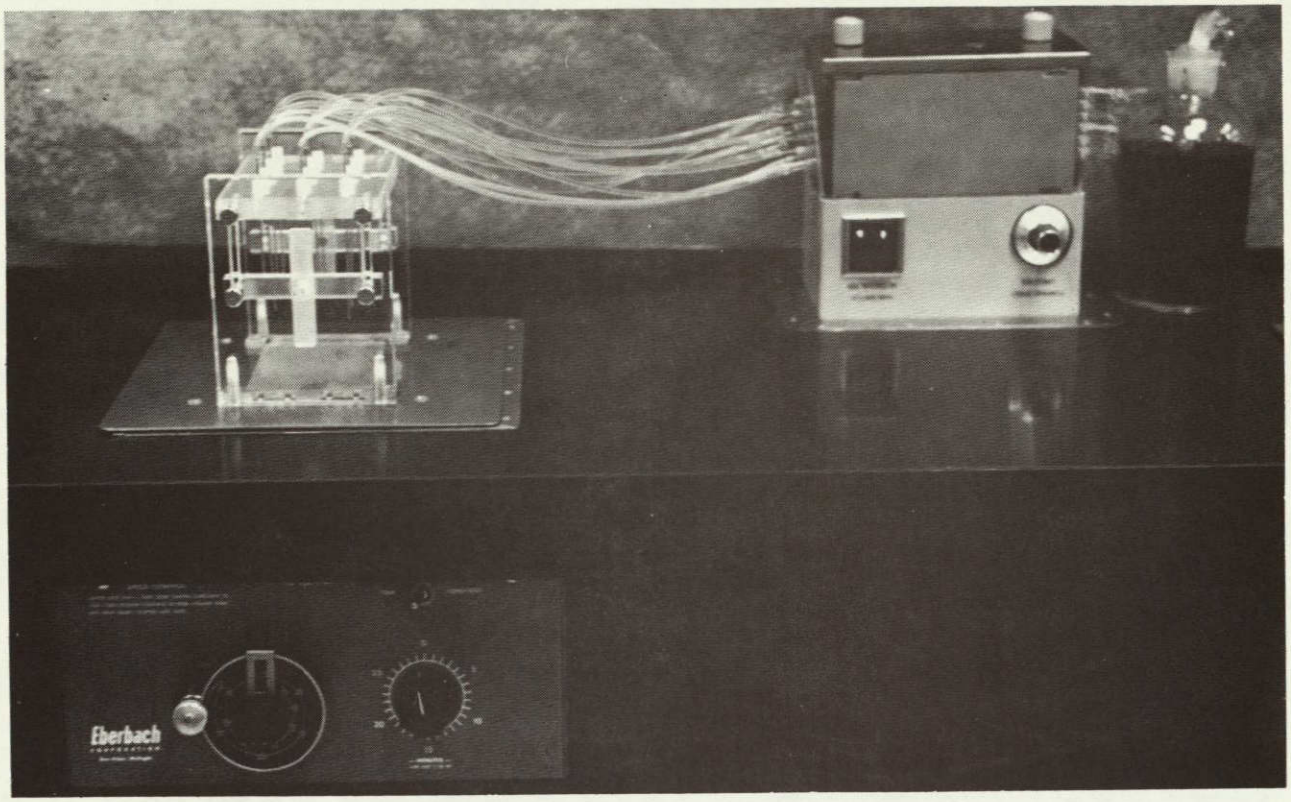

Fig. 4-7. Fluid dispenser

6. Slide Dispenser

This unit stores slides in four channels and dispenses them four at a time (Fig. 4-8). A lever on the right-side pushes 4 slides from the bottom of the stack into the cell dispensing position. Each of the 4 channels holds 128 pre-marked slides. The channels are spaced to coincide with the wells in the culture plate.

7. Cell Dispenser, Cell Spreader and Slide Warmer

Following the third fixation, aspiration and resuspension step, the cells are ready for transfer onto the microscope slides. A manifold with four 15-gauge needles is seen in Fig. 4-9 in the dispensing position over 4 slides. The manifold is placed over the 4 wells manually and is lowered until the needles are immersed in the cell suspension. Pressure applied to the bar at the top

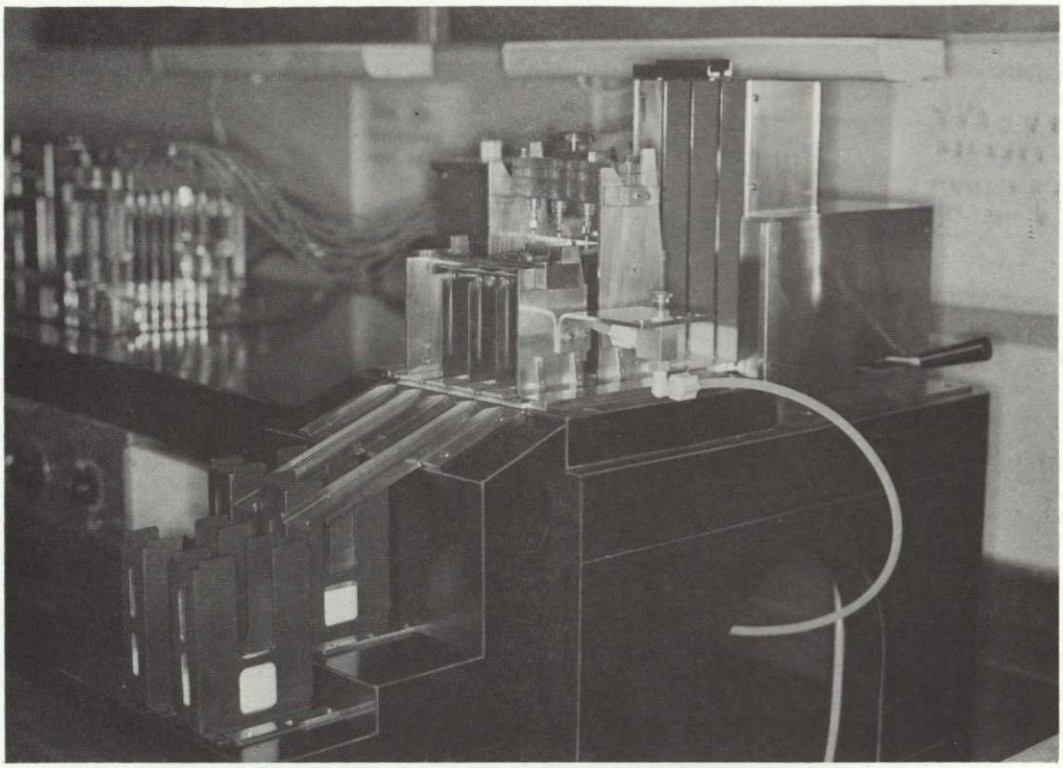

Fig. 4-8. Slide dispenser

of the manifold depresses a membrane and upon release a pre-determined amount of cell suspension is drawn up. The manifold is then placed in position as seen in the figure, the bar is depressed again and the drops of cells are deposited on the slides.

Immediately after the drops are deposited, the lever on the slide dispenser is moved forward again producing 4 more slides for the cell dispenser and moving the previous 4 slides to the next position under a blower. The blower consists of 4 ports with flared ends which are connected to a metered compressed air cylinder. By depressing a button, a controlled blast of air provides the scatter and spreading usually achieved by oral methods. The velocity of the air blast is controlled by two metered valves.

After the second dispensing of cells, the lever is moved forward again and the blown slides are advanced to the next position which contains 4 slide

REPRODUCIBILITY OF THE
ORIGINAL PAGE IS POOR

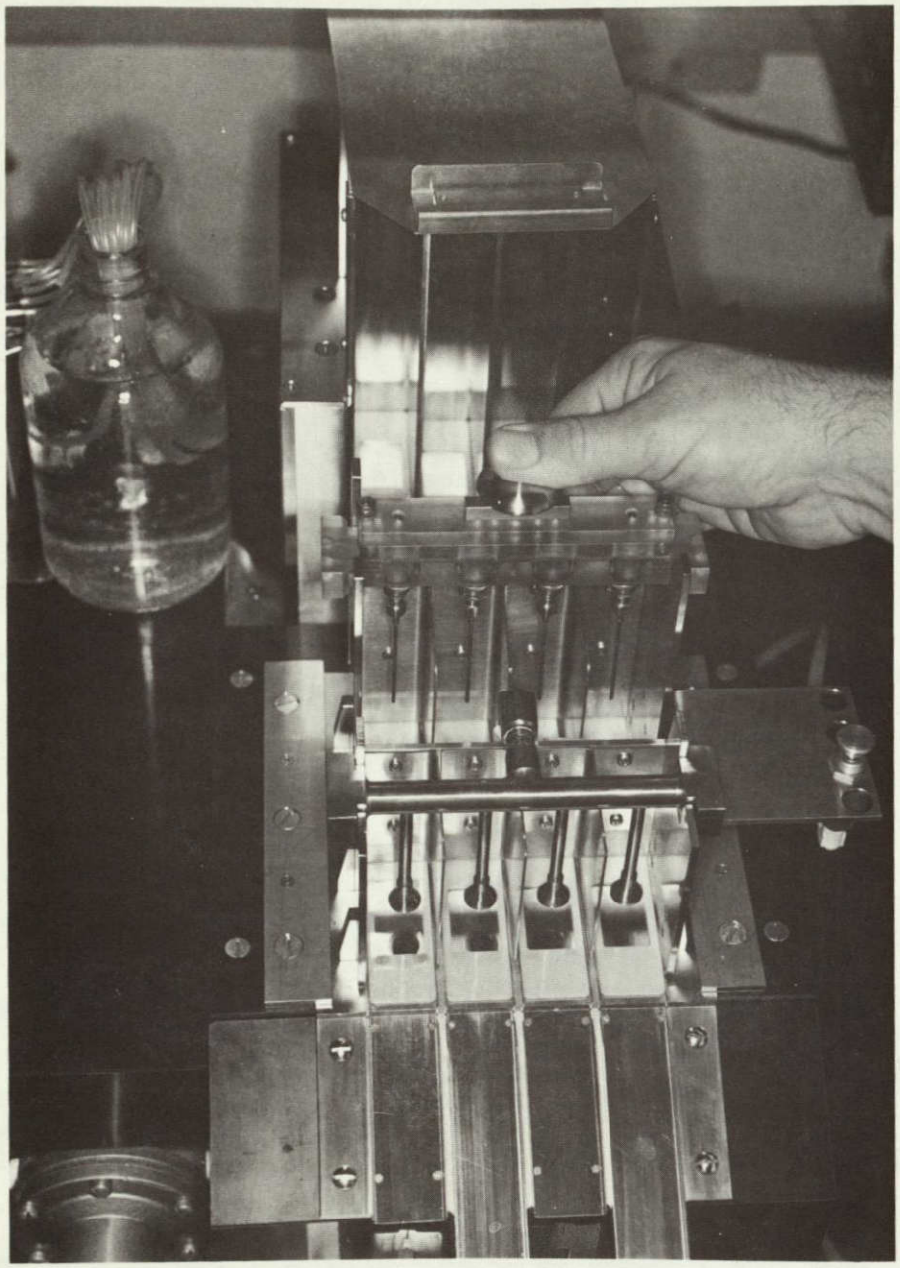

Fig. 4-9. Cell dispenser and cell spreader

warming plates with a variable temperature control. The slides remain in this position until the lever is moved forward again at which time the slides move down 4 chutes into 4 slide stackers.

8. Needle Removal and Replacement

To avoid cross-contamination of specimens, a new set of cell dispenser needles are required for each row of wells. The needles are removed by the device on the right in Fig. 4-10. The manifold is placed on the device with the hubs of the needles fitting into slots in a metal plate. A lever is depressed and the metal plate is forced downward pulling the needles off. They drop into containers and are later placed in an ultrasonic cleaner before re-use. The manifold is then moved to the left to a stand holding pre-racked needles. The manifold is pressed firmly picking up four needles for the next run.

9. Slide Staining

We have evaluated the following slide staining machines through actual demonstrations and have found useful features in each:

1) Shandon automatic slide stainer.
2) Aerojet slide stainer.
3) Ames Hema-Tek slide stainer.
4) Precision Scientific Autostain.
5) Cam-rad Hemomatic slide stainer.

None meet all of the requirements implicit in conventional or Giemsa-banding staining procedures. As of this writing, slide staining is done by hand.

10. Microscope Slides

Conventional glass slides are used without coverslips. This avoids the application of mounting medium and subsequent drying time. Slides with cover-slips mounted in plastic which are made by Aero-Jet Corporation were evaluated and found to be satisfactory. However, a patent restriction precludes their use in our system.

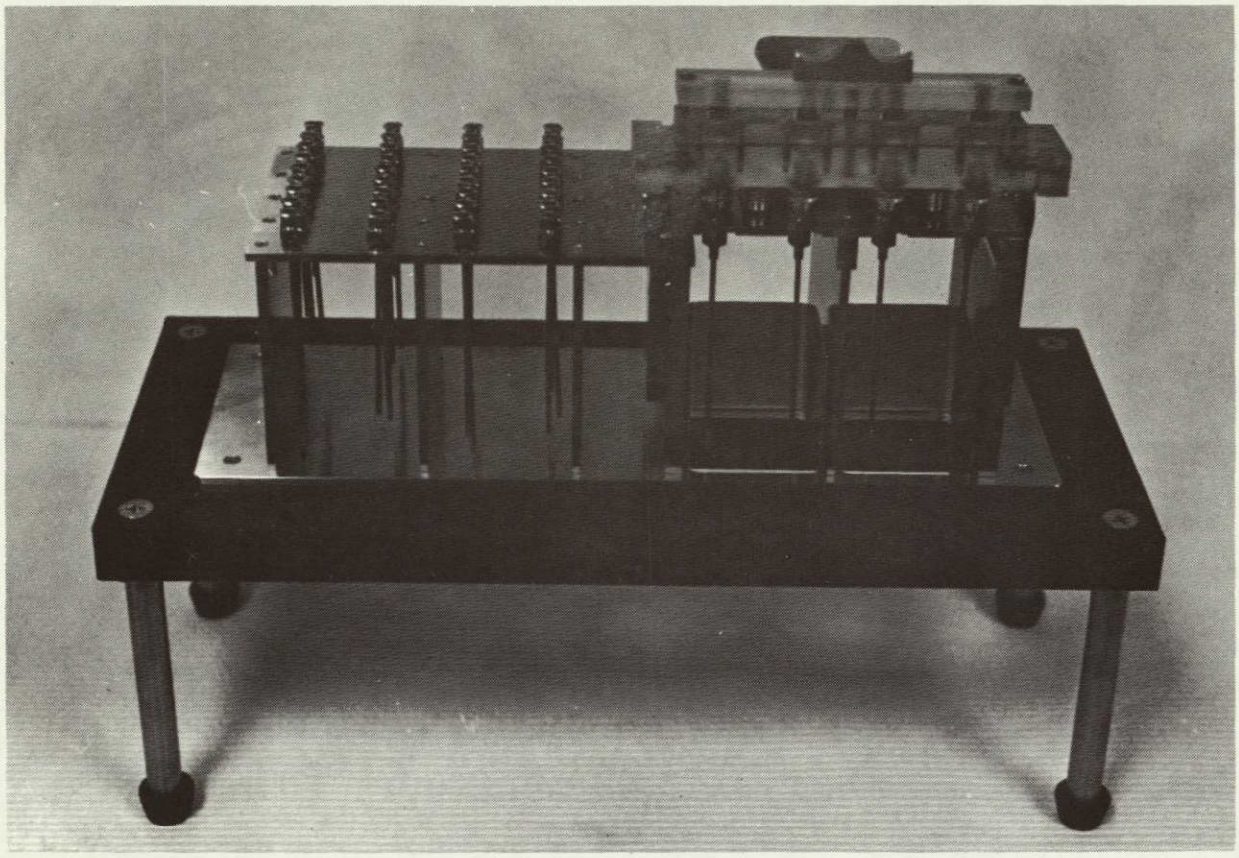

Fig. 4-10. Needle remover and needle rack

11. Slide Marker

A device which marks slides automatically with the specimen number and date is desirable for this process. We have evaluated several marking devices and found none completely suited to our operation. As of this writing, slides are marked by hand.

B. COMPARISON WITH MANUAL METHOD

1. Comparative Time Analysis

A comparative analysis of the time required to process 12 specimens by the tube method (old) and the culture plate method (new) is shown in Table 4-1. The figures for the old method were based on averages of actual trials from 2

laboratories. The figures for the new method were obtained from actual trials during the contract. In each step of the process, a considerable reduction in time is seen. The new method provides for an overall reduction in processing time by a factor of 8.

Table 4-2 shows a projection for the time required to process 48, 144 and 576 additional specimens (4, 12, and 48 culture plates). It is apparent that in an 8-hour workday, the maximum number of specimens that can be processed by the old method is approximately 48. By the new method the maximum number of specimens that can be processed in a day is approximately 576. While this daily volume is beyond that of most laboratories, it would be useful for total ascertainment of transient populations (e. g., state hospitals for the retarded). Slides could be made in a short time and stored for subsequent analysis.

Table 4-1. Time of processing 12 specimens

Stage	Time	
	Old Method	New Method
Centrifugation (post culture)	10 min.	5 min.
Aspiration (4 times)	24 min.	12 sec.
Fluid dispensing (4 times)	44 min.	2-1/2 min.
Slide preparation (3 slides)	9 min.	3 min.
	1 hr., 27 min.	11 min.

Table 4-2. Time of processing additional specimens

Method	Number of Specimens			
	12	48	144	576
Old method	1 hr. 27 min.	5 hrs. 52 min.	17 hrs. 48 min.	---
New method	11 min.	44 min.	2 hrs. 20 min.	8 hrs. 48 min.

2. Comparative Cost Analysis

Table 4-3 shows the costs of culture vessels and materials such as culture medium, calf serum phytohemaglutinin and antibiotics. The plastic culture tubes (16 x 125 mm) cost 10¢ each and the preliminary quotation on the cost of a 12-well culture plate is $2.15.

The materials used by the two methods differs by $1.20 for 12 tests in favor of the new method. The main reason for this difference is related to the volume of culture medium used, i.e., 3 ml for the plate method and 8 ml for the tube method. However, considering the overall cost of the test including analysis, a difference of 10¢ per test is negligible.

Table 4-3. Cost comparison

Item	Cost (per 12 Specimens)	
	New Method	Old Method
Culture vessel	$2.15/plate	$1.20/12 tubes
Materials	1.92	3.12
	$4.07	$4.32

SECTION V

COMPUTER AND PERIPHERAL EQUIPMENT

With the exception of the specimen preparation system, the automated system for chromosome analysis is centered around a minicomputer with large core memory and several standard peripheral devices, and interfaced to several pieces of non-standard hardware. A block diagram of this hardware arrangement appears in Fig. 3-3. The minicomputer is used to control the microscope stage in three-axis motion, control and accept data from the image digitizing system, accept data from the automatic focus and spread detector unit, display images on the gray scale display device, accept operator input from the cursor joystick, and provide digital image data for the hardcopy output device in addition to operating the ordinary computer peripherals. The computer also performs the karyotype analysis of individual cells and supports interactive statistical analysis of stored chromosome measurement data.

A. COMPUTER

The computer selected for this application is the PDP-11/Model 40, manufactured by Digital Equipment Corporation (DEC). DEC is a vendor of established reputation, having delivered more minicomputer systems than all other vendors combined. The system will be easier to duplicate since potential builders are likely to be familiar with the PDP-11. The large number of PDP-11's in the field makes it possible that they would already have access to one. Since the machine is so popular, several commercial firms market low-cost, plug-compatible peripheral equipment. Most manufacturers of non-standard computer hardware market a standard interface to the PDP-11.

B. PERIPHERAL EQUIPMENT

The system is itemized in Table 5-1. It was purchased with a total of 40,000 16-bit words of core memory. Given the size of the digital images to be processed and our experience with automatic karyotyping on the IBM 360/44,

this was our initial estimate of total requirements. Since we overlap, the core memory requirement is somewhat higher than it would be for sequential operation. However, the programs have been fitted into only 32K words. A portion of the core (24K words) was bought from a third-party vendor at considerable savings over DEC core.

Table 5-1. Computer system hardware

Vendor	Item
DEC	PDP-11/40 processor, 16-bit, 1μsec
SMI	Core memory (40 Kword total)
IMS	Disk storage, 3 dual drives, 15 Mbyte total capacity
DEC	Magnetic tape drive, 9 track, 45 IPS, 800 BPI
TALLY	Line printer, 200 LPM
DEC	Keyboard/printer, 30 CPS
DEC	Paper tape reader, 300 CPS
DEC	Real-time clock, programmable
DEC	UNIBUS, 18-bit, asynchronous
DEC	DMA and general interfaces
DEC	Bootstrap ROM (read-only memory)
NOTE:	DEC = Digital Equipment Corporation SMI = Standard Memories Incorporated IMS = International Memory Systems Tally = Tally Corporation

The computer system has one disk controller, and three dual moving head disk drives for a total of six disks of 2.5 million word capacity each. In each dual drive, one disk cartridge is removable and one is fixed. The requirement for three disk drives was dictated by the overlapped operation. Sequential operation would require only about two. However, after the disk controller and one drive have been purchased, additional drives are available at relatively low cost. Three dual disk drives avoid head contention problems, even with the overlapping of three simultaneous tasks.

The system has a single 800 BPI 9-track industry compatible magnetic tape drive. This unit provides for long-term storage of statistical data, for transfer of digital images to other display devices and computer systems, and for software transfer to other machines.

A 200 line-per-minute line printer is used for listing chromosome measurement data and patient reports and for use in program development.

The system peripheral equipment also includes a keyboard/typewriter unit which provides most of the communication between the operator and the machine during operation. The system also has a paper tape reader for loading diagnostic programs in the case of system failure.

A programmable real-time clock allows programs to allot specific amounts of real-time for operator activities. Two matching empty cabinet racks and several general purpose interface kits with power supplies allowed us to build all the special purpose equipment into the same cabinet and in a compatible hardware format.

SECTION VI

SPECIAL PURPOSE HARDWARE

This section describes the design of the computer interface hardware which is not available as standard peripheral equipment. A block diagram appears in Fig. 6-1. The five major components are (A) the microscope/stage system, (B) the image digitizing system, (C) the automatic focus and spread detection unit, (D) the interactive gray level display, and (E) the hardcopy output device. With the exception of the focus and spread locator unit, the major components are commercially available devices. The spread detector and focus unit does not exist commercially and was designed and built by JPL. The image digitizing system was supplied from the vendor with a PDP-11 plug-compatible interface. The microscope stage, gray-scale display and hardcopy pictorial output device are connected to the computer by JPL-built interfaces. This section describes each major component and the design of its interface.

A. MICROSCOPE/STAGE SYSTEM

1. Functional Description

The microscope/stage system is diagrammed in Fig. 6-2 It is basically a standard research microscope modified for the installation of a three-axis motorized stage. An optical interface is included to present the magnified specimen image to the image digitizing system. The image may also be viewed through conventional eyepieces. The motor control interface (MCI) controls stage positioning in the three axes under either computer or operator remote control. The MCI also passes filter position and objective lens position information to the computer.

2. Design

We submitted an RFQ (Request for Quotoation) to 15 known sources of microscopes and/or motorized microscope stages. From their responses, it

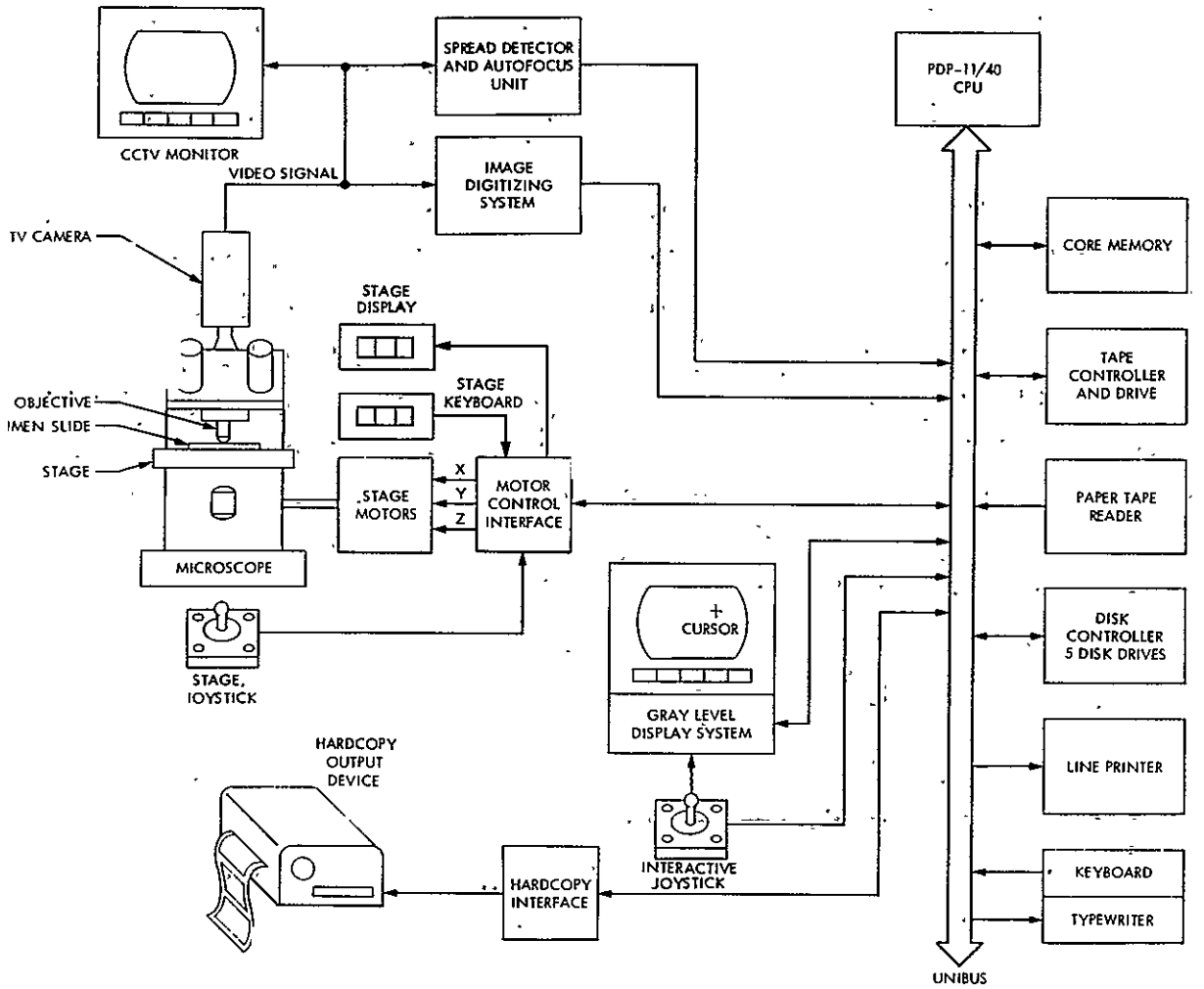

Fig. 6-1. Block diagram of hardware arrangement

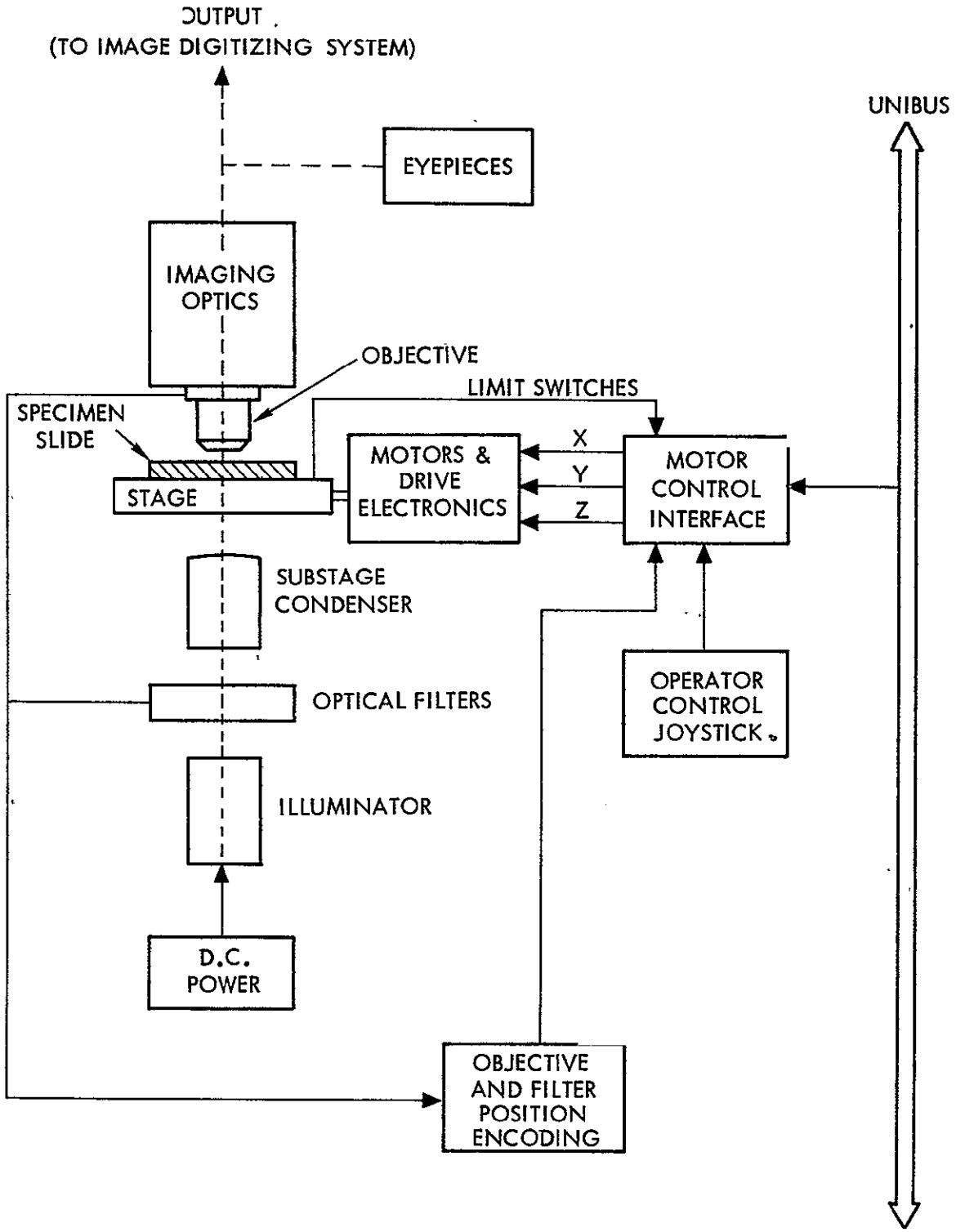

Fig. 6-2. Microscope/stage system

was determined that only the microscope and motorized stage unit proposed by Image Analyzing Computers, Ltd. (IMANCO) satisfied our requirements. Although Zeiss and Leitz both market microscopes with motorized stages, neither could simultaneously meet our requirements for motor control of the Z-axis (focus), 10-micron stage step size, 1000 step per second slew rate, price, and delivery data. To meet our requirements, IMANCO had to quote on a modified version of a currently available stage. This stage, however, will probably be marketed as a standard production item. Indeed, several manufacturers have plans to produce suitable microscope/stage combinations within the next one to two years. This should add to the choices available in replicating the system. The microscope supplied by IMANCO was made by Reichert. The MCI was built in-house since the unit is unavailable commercially.

a. Microscope

The microscope unit is a Reichert Zetapan research microscope modified for installation of the IMANCO motorized stage and an optical interface to the image digitizing system. Specimens may be viewed with transmitted light bright-field illumination and associated optics. Accessories for phase contrast, fluoresence, and incident illumination are available for field installation.

The bright field illumination system consists of a light source, illuminator condenser and adjustable field diaphragm in a separate housing mounted to the microscope, and an adjustable mirror, adjustable aperture and condenser fitted as integral parts of the microscope. The illuminator employs a tungsten halogen light source. DC power is used to avoid the undesired intensity variation of AC. Provision is incorporated for easy insertion of optical filters into the light path; additionally, a heat-absorbing filter is permanently mounted in place. The condenser system is of the acromatic, bright field type. The illumination system provides:

1) Constant intensity over the field of view at the specimen for 20X to 100X objectives.

2) Sufficient light intensity to provide an illumination of at least 0.28 lux (3.0 ft – candles) at the magnified image output from the microscope to the image digitizing system when using a 100X oil-immersion objective of 1.25 N.A.
3) Easy adjustment for mechanical and optical alignment and calibration.

The configuration of the optical imaging system allows the specimen to be viewed simultaneously through binocular eyepieces and by the image quantizing system. Specimen slides mount horizontally on the stage with the illumination coming from below, and the objective and other imaging optics are above the specimen. Microscope objectives are of the flat-field achromatic type. Retractable spring-loaded mounts are used to avoid damage from inadvertent contact with the specimen slide. The following objectives are included in the initial system:

1) 4X, 0.10 N.A. (numerical aperture).
2) 10X, 0.25 N.A.
3) 20X, 0.45 N.A.
4) 40X, 0.65 N.A.
5) 63X, 0.8 N.A.
6) 100X, 1.25 N.A., oil immersion.

The objectives are mounted in a rotating turret assembly capable of containing five lenses. Standard cover glasses 0.18 mm thick are used on specimen slides to minimize image degradation due to cover glass effects.

The magnified image output of the microscope is used as the input to the image digitizing system. The image sensor is a 1-inch vidicon, having a scanned target area about 10 mm square. The image plane is external to the microscope body at a point where an appropriate adapter bracket for mounting the image sensor may be placed. The magnification (image plane to specimen) is approximately equal to the power of the objective. Thus, with a 100X objective, the 10 mm scanned area covers 100 μm by 100 μm at the specimen (object plane). This is contained within the binocular field of view. Since

image contrast is extremely important, veiling glare and stray light are minimized in the optical system of the microscope. The output image is parfocal with the image as viewed through the eyepieces.

The microscope provides switch closure signals to indicate which objective and which optical filter are in use.

b. Stage

The motorized microscope stage is capable of being driven under both computer and operator control to position the specimen properly beneath the objective lens of the microscope and to focus the image. The functional requirements dictated by the size of a standard microscope slide, the search speed necessary, and the mechanical stability needed are satisfied by the IMANCO precision stage. Established techniques are used to achieve sufficient rigidity and a flatness of ±3 microns over the total X and Y travel. The stage is driven by digital stepping motors in three mutually perpendicular axes: X – along the length (75 mm side) of the microscope slide, Y – across the width of the microscope slide (25 mm side), and Z – along the optical axis of the microscope (focus direction). The stage is controlled by the MCI, either from the computer or the operator joystick box.

Some basic performance specifications for stage motion under motor control are given below:

	Axis		
	X	Y	Z
Total travel	50 mm	50 mm	2 mm
Step size	10.0 μm	10.0 μm	0.1 μm
Maximum step rate (steps/sec)	1000	1000	1000
Backlash (μm maximum)	1.0	1.0	0.1
Repeatability (μm)	±1.0	±1.0	±0.1

Stage motion is restricted to the total travel in all axes by means of limit switches. Once the mechanical limit has been reached, further drive to the stepping motor is inhibited, except in the direction away from the limit. These

limitations of stage travel serve as backup for analogous limitations imposed by the operating software.

The slide holder accommodates standard 25 mm x 75 mm microscope slides. It allows for the variation of width, length, and thickness of standard slides. Slides are easily inserted and removed with repeatable positioning to within about ±10 microns, yet are firmly held in place during all movements of the stage. No fastening apparatus such as clips for holding the slide in place extend above the top surface of the slide in such a way as to interfere with the objective lens over the entire X and Y travel of the stage.

c. Motor Control Interface

The motor-control interface (MCI) is a piece of JPL-built hardware to control the positioning of the microscope stage in 10-micron steps in the X and Y directions and in 1/10 micron steps in the Focus direction, both by computer and operator control. The MCI joystick box and the position display are shown, respectively, in Figs. 6-3 and 6-4.

(1) Computer/Operator Mode Control. The microscope's motors may be controlled by either the computer or the operator. To operate in either mode the MCI must be selected for that mode. The two states of MCI selection are defined as Computer Mode and Operator Mode. The control of the selection is normally with the operator; however, the computer has the option to override the operator mode and/or to inhibit subsequent selection of the operator mode.

The operator may request control of the MCI by pushing the Operator Mode Select button on the panel of the Operator Stage Motor Control unit (joystick). If the computer has activated neither the Capture nor the Inhibit Operator Mode control bits on the MCI Status and Control DAR and if none of the motors is busy, the request will be granted and Operator Mode will be selected. If any of the previous conditions is not met, the request will be held and honored as soon as the conditions are met unless the operator cancels the request by pushing the Computer Mode Select button on the Operator Stage Motor Control unit.

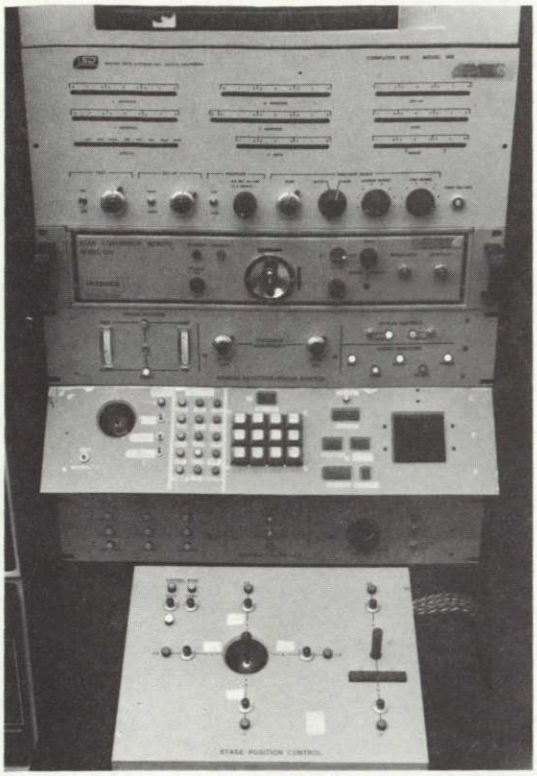

Fig. 6-3. MCI joystick box

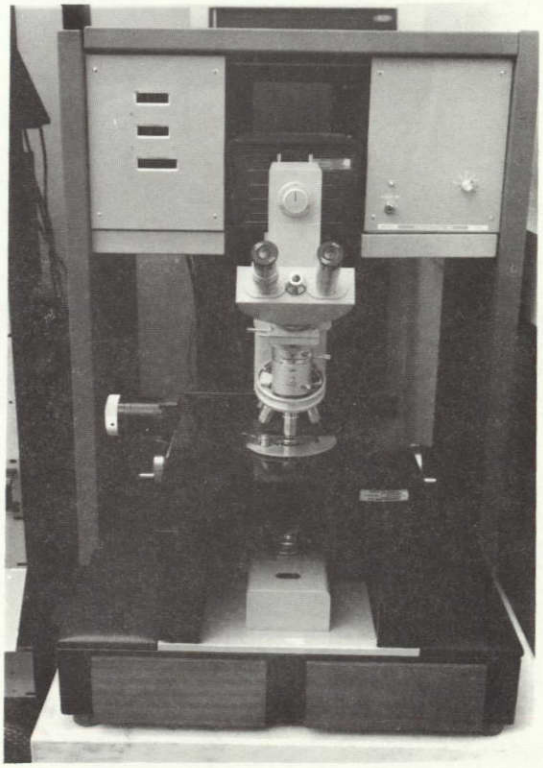

Fig. 6-4. Position display

Once in Operator Mode the MCI may be returned to Computer Mode only by the operator's pushing the Computer Mode Select button or by the computer activating the Capture control bit.

Whenever the MCI returns to Computer Mode an interrupt is initiated to notify the computer.

(2) Computer Initiated Move. The computer may initiate a motor move either relative to the present motor position or to an absolute position. (Motor position units in the MCI are motor steps, not microns.) A relative position move is initiated by the computer moving a 2's complement value of the number of steps to be moved to the motors Cumulative Position and Move Register DAR. An absolute move is initiated by performing a subtract instruction of the desired position from the present value in the DAR.

(3) Operator Initiated Move. An operator initiated move is controlled by the Operator Stage Motor Control unit. The operator may move the stage motors, either a single step at a time by push buttons or in a variable rate slew by use of two joysticks (one for X-Y and one for Focus). Each push button generates a single pulse that defines the motor and direction of movement. The X-Y joystick generates pulse trains, the train(s) generated selecting the motor(s) and direction of movement. The direction of movement is dependent upon the direction of joystick displacement and the move rate upon the amount of displacement. The Focus "joystick" is actually a two-position switch plus neutral. There are two focus motor move rates, the faster being selected by depressing a bar switch located near the joystick.

B. IMAGE DIGITIZING SYSTEM

1. Functional Description

The digitizing system converts the optical image of the specimen as magnified by the microscope system into a digital representation and transfers it to the computer for analysis. The digital representation is a rectangular array of 512 x 480 gray level values (DN), each being an 8-bit binary number

proportional to the speciman optical density (OD) at that particular point. The complete conversion process takes less than 20 seconds per frame. In addition, monitoring and calibration functions are provided. The system also provides the input video to the spread detection and auto-focus unit (Fig. 6-1).

Images on 35-mm or 70-mm film may also be input to the image digitizing system. This is accomplished by physical removal of the image sensor (TV camera) and addition of an appropriate lens, film holder and illumination system. Changeover time (from microscope to film input or vice versa) is less than 1 hour.

2. Design

a. General Description

The unit selected for this purpose is the Model 108 Computer Eye supplied by Spatial Data Systems, Inc. It met our requirements and was considerably less expensive than the other bids received. The unit contains its own interface and is plug compatible with the PDP-11/40. When delivered, the unit was found to exceed its requirements. Specifically, it has computer programmable video gain and offset control, and a calibration display which greatly facilitates setting up the digitizing levels. The unit, as supplied, does not transfer data into the computer by direct memory access (DMA) but rather on a demand-response basis. DMA transfer capability represents a significant additional cost. Since specimen scanning constitutes, on the average, 250, 000 byte transfers every 5 minutes, the small time saved by direct memory access is not justified in view of its cost.

The SDS unit is diagrammed in Fig. 6-5. A television camera scans the image at the standard TV rate (525 lines, 60 fields per second, interlaced 2:1) and produces a video signal which is monitored on a television display. The brightness value in the scanned picture is sampled at each point of a 512 x 489 grid and converted to an 8-bit binary number. Points anywhere in the picture may be selected under program control, or the digitization can proceed through

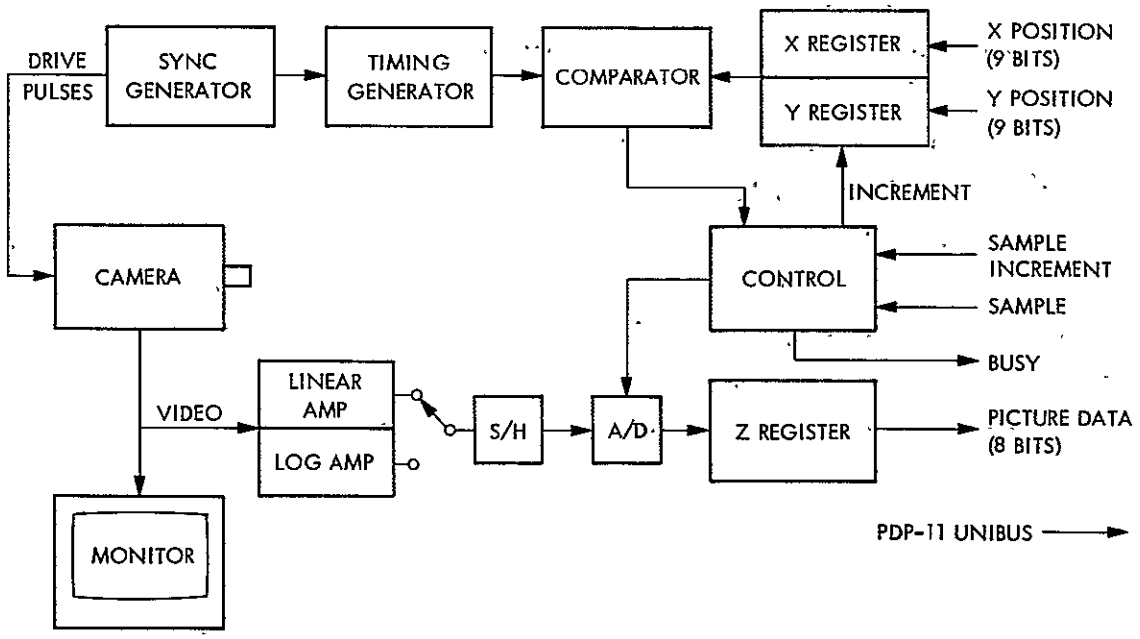

Fig. 6-5. SDS image digitizer block diagram

all points in sequence. A cursor is displayed on the monitor to show the points being digitized.

A front panel switch selects either linear or logarithmic processing of the video signal. Thus, the digitized sample can correspond to either transmittance or to optical density. The logarithmic mode provides digitized values representing a logarithmic scale over a signal range of 100:1, equivalent to an optical density range of 2 density units.

With a signal-to-noise ratio in excess of 200:1 (p-p video to r. m. s. noise), the camera is compatible with the digitizer's 8-bit resolution of the gray scale. Shading correction circuits compensate for changes in camera sensitivity across the field of view. The limiting resolution of the camera is greater than the number of digitized points to insure an accurate digital representation of the original picture.

The block diagram in Fig. 6-5 shows the operation of the unit. A special synchronizing generator provides timing pulses for sampling the television signal and drive pulses for the camera. The X and Y registers hold the pixel location where the sample is to be taken and the Z register holds the value of the sample after it is digitized by the analog-digital converter (ADC).

There are two modes of operation — Sample and Sample-Increment. In the Sample mode, the pixel location of the derived sample is placed on the X and Y register input line and the Sample line is pulsed. At the trailing edge of the Sample pulse: (1) the X-Y location is transferred to the X-Y register, (2) the video is sampled at the time when the television scan is at this position, and (3) the digitized value is placed in the Z register. The Busy line is raised with the Sample line and falls when the data in the Z register is available on the digital output lines.

The Sample-Increment mode operates in the same manner except that the sample is taken at the location standing in the X, Y registers and the registers are then incremented by one. The Y register corresponds to the least significant part of the X, Y position so that successive samples are taken in sequential vertical positions on the picture. These samples occur at the television horizontal scanning rate, 15,750 kHz. Samples may be obtained at this rate if Sample-Increment commands are received within 50 microseconds after the fall of the Busy signal.

A more detailed description of the system is found in the "Computer Eye Handbook" by Spatial Data Systems, Inc., 1974.

b. Image Sensor

A vidicon image tube (type 1069) was selected as the image sensor for the TV camera. Resolution was the primary consideration. The plumbicon tube has less lag (residual image retension), unity gamma and advertised resolution specifications almost equal to the vidicon, and was also evaluated for the task. Unlike the vidicon, plumbicon resolution is quite sensitive to several operational parameters (light level, target voltage, beam current, etc.). Advertised

specifications are based on carefully optimized laboratory conditions which may not be useable in practice. We tried the type XQ1071L plumbicon in the TV camera and found its resolution under actual operating conditions to be less than half as good as the vidicon. This loss of resolution severely degraded system performance and was thus intolerable. The increased lag of the vidicon places a limit on maximum slide search speed.

The input to the image sensor is the magnified image of the specimen output from the microscope. The image is about 10 mm square and has an intensity of at least 0.28 lux (3.0 ft.— candles) in the absence of a specimen.

The light source is a D.C. powered tungsten-halogen lamp. Filters are inserted in the light path to maximize the image contrast. The average wavelength may be assumed to be 500 nm, but the input image will contain components over the entire visible spectrum. Specimen optical density in areas of interest will normally range from 0.0 OD to 0.6 OD with a maximum expected density of 1.0 OD.

c. Resolution

The microscope objective lens for primary use is a 100X oil immersion type with a numerical aperture (N. A.) of 1.25. For a diffraction-limited system the modulation transfer function is shown as MTF_{lens} in Fig. 6-6. If we assume the scanning spot is Gaussian with 35-micron half amplitude width, its transfer function, referred to the specimen, is a Gaussian with a standard deviation of 1 cycle per micron. This is shown as TF_{spot} in Fig. 6-6. We can relate video frequency to spatial frequency at the specimen by noting that one TV line scan takes about 50 microseconds and covers 100 microns. This means a spatial frequency of 1 cycle/micron corresponds to a temporal frequency in the video of 2 MHz. The transfer function of a video amplifier with its 3 dB point at 5 MHz is shown as TF_{amp} in Fig. 6-6.

Figure 6-7 shows the overall transfer function of a linear system consisting of a 100X, 1.25 N. A. diffraction-limited lens, a 35-micron scanning spot

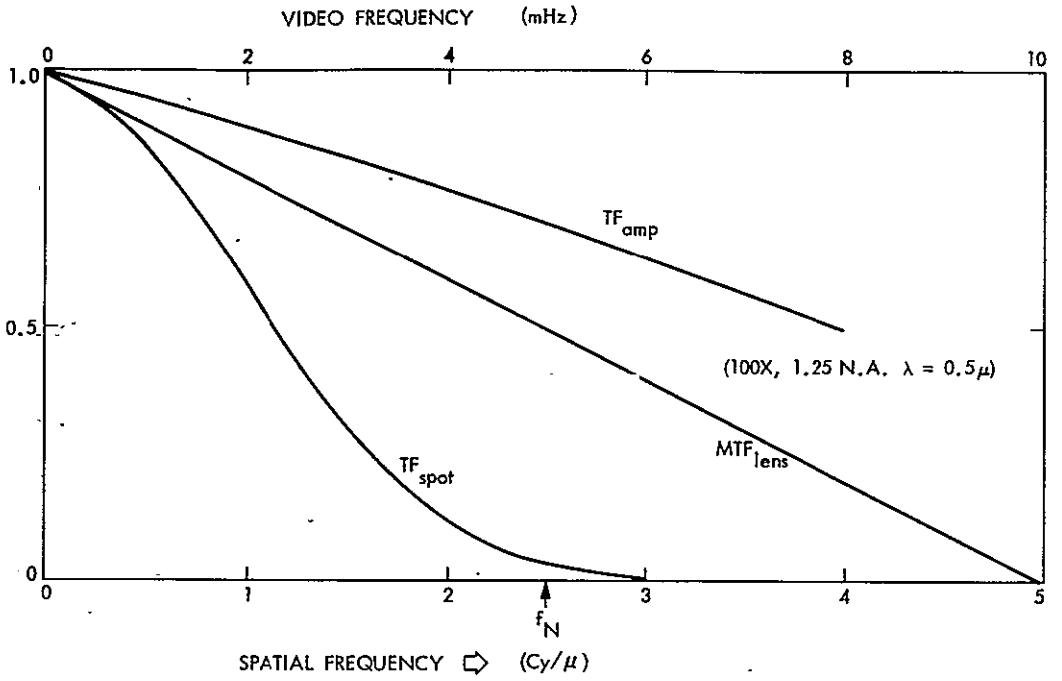

Fig. 6-6. System component transfer functions

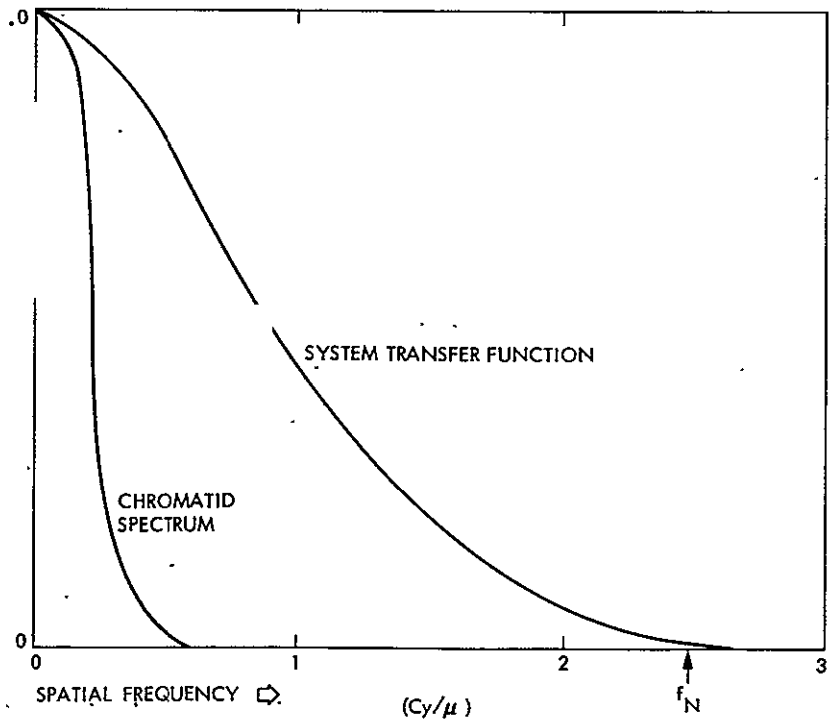

Fig. 6-7. Overall system transfer function

and a 5 MHz wide video amplifier. Consider a single chromatid as having a Gaussian profile 1 micron wide between inflection points. Its spectrum is a Gaussian with standard deviation 0.32 cycles/micron as shown in Fig. 6-7.

Figure 6-7 illustrates that (1) the image of a single chromatid will be passed with little degradation and (2) sampling at 5 points per micron, yielding a folding frequency (f_N) of 2.5 cycles per micron, will avoid aliasing. Furthermore, our work with banded chromosomes indicates that the useful information in the banding patterns falls below 1 cycle per micron. Thus a 35-micron sampling spot diameter (at the image) and 5 point per micron sampling (at the specimen) are acceptable.

d. PDP-11 Interface

The interface connects directly to the Unibus of the PDP-11 and operates as a standard I/O device. Separate addresses are assigned to the controller for the transfer of the SDS-108 picture element X - Y addresses, the command/status word, and the Z (gray-scale) picture data. The formats and addresses are tabulated as follows:

108 Function	PDP-11 Address	Format															
		MSB															LSB
		15	14	13	12	11	10	9	8	7	6	5	4	3	2	1	0
Command/ Status	764020_8									R	E					I	S
X Address	764022_9										9 Bits					$0\text{-}511_{10}$	
Y Address	764024_8										9 Bits					$0\text{-}489_{10}$	
Z Value	764026_8										8 Bits					$0\text{-}255_{10}$	
Busy (Sample Available)	Interrupt Vector 270_8																

NOTE: S - Sample At X, Y Address
I - Sample and Increment Mode
R - Ready
E - Interrupt Enable

The X register, which specifies the horizontal picture scan position, is modified by a MOV command to address 764022. The Y register, which specifies the vertical position, is modified at address 764024. To interrogate Z, the gray-level value, at position (X, Y), a MOV command is executed to address 764020 with S=1. This initiates a digitization of the picture element at the current (X, Y) position given by the X and Y registers. Thus, to digitize an arbitrary point, the program should first MOV an X value to the X register, then MOV a Y value, and then MOV an S command. When the new gray-scale value has been acquired and digitized (with a latency time of from approximately 5 μs to 33 milliseconds), an interrupt is generated at vector address 270, and the updated gray-scale value can be accessed by a MOV from the Z register (address 764026).

Bit 1, I, of the Command word sets the digitizer in the Sample and Increment mode. A MOV command to address 764020 with S=1 and I=1 causes the digitizer to sample at the current (X, Y) address and increment the address by 2. Successive identical MOV commands will sample and increment through the even lines and the odd lines of a vertical column, followed by the even, then odd lines of the next sequential column, with column 511 followed immediately by column 0.

The status of the digitizer is accessed by a MOV from the Command/Status register (address 764020). Only bit 1 (I), bit 6 (E), and bit 7 (R) are available to the processor.

C. SPREAD DETECTION AND AUTO-FOCUS HARDWARE

1. Functional Description

The automatic focus and spread detector unit processes the video from the closed circuit TV (CCTV) camera in the image digitizing system and supplies the computer program with data regarding the focal sharpness of the optical image and the presence or absence of a metaphase spread in the field. Since no such unit is available commercially, it was designed and built at JPL for use with the system.

The CCTV video is used to generate focus quality and spread presence parameters at the TV field rate of 60 per second. These parameters are passed to the computer which controls movement of the microscope stage through the operating software. Depending on the desired function, focusing or metaphase finding, and the parameter values, a maximum of four words may be transferred to the computer at every TV field:

1) Spread presence parameter.
2) Focus parameters (two).
3) X stage coordinate value.
4) Y stage coordinate value.

During slide search, the computer moves the stage, waits for a spread presence parameter, and then decides whether to log stage coordinates before moving the stage. The moves are controlled by the computer to search the slide in a systematic pattern selected by the operator. The size of each move is determined by the field of view of the particular microscope objective in use. For focusing, the microscope fine focus knob is driven by a digital stepping motor to maximize the two focus parameters, taking backlash into account. Again, the size of each move is determined by the microscope objective in use.

The spread presence parameter is based on the number of valid threshold crossings during a TV field. A valid threshold crossing is obtained whenever the video goes above a preset threshold density for a time period within prescribed limits. These limits correspond to the minimum and maximum chromosome dimensions as will be explained later. In addition to counting valid threshold crossings, the hardware checks the total area of objects within the field of view. Indication is provided when the area is sufficient to be a metaphase spread. The spread presence parameter occupies 11 bits of the 16-bit computer word. Three bits are used for indication of spread presence, count within limits and area within limits. The actual 8-bit count is also included.

Two focus parameters are generated. One is based on the high spatial frequency content of the video; the other uses the distribution of optical density.

Every TV field (one-sixtieth of a second) a 16-bit word is available to be passed to the computer. The high-order 8-bits contain the high frequency content focus parameter; the low order 8-bits are the density derived focus parameter. The operating software uses a combination of both parameters to focus the image.

2. Design

a. Metaphase Spread Detection

The basic method of metaphase spread detection can be described with reference to Figure 6-8. A TV scan line is shown to illustrate types of objects that may be encountered: an undivided nucleus, three chromosomes in "worst case" orientations, and a small dust particle. Below the scan line are shown the threshold output and the valid threshold crossings. A valid threshold crossing is obtained whenever the video falls below threshold density after being above threshold for a time period which is within prescribed limits.

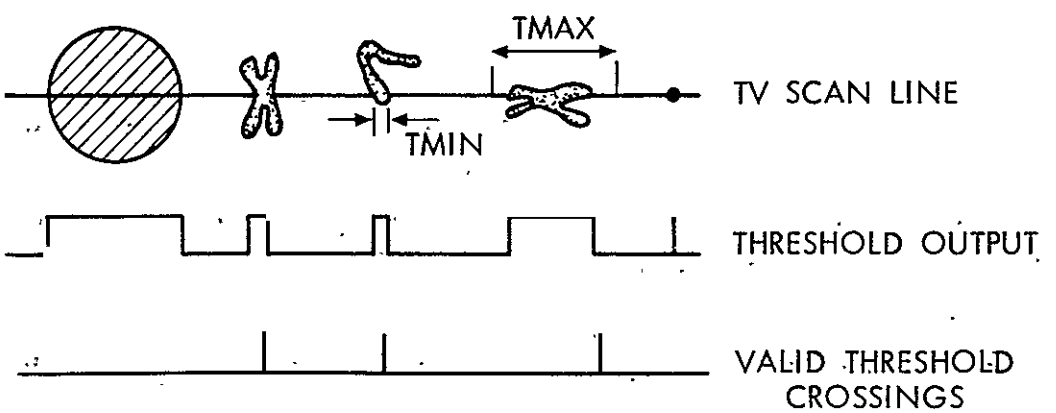

Fig. 6-8. Spread detection waveforms

These limits (Tmin and Tmax) correspond to the minimum and maximum chromosome dimensions. The number of valid threshold crossings during a TV field must be within specified minimum and maximum limits for the "COUNT" criterion to be satisfied indicating a possible metaphase spread is in view. This aspect of the design is similar to the method reported by Green (Ref. 5). There is, however, an additional "AREA" criterion which must be met before spread presence is indicated. The area above threshold is determined by integrating the threshold output for each entire TV field. If the integrator output is within specified limits, the AREA criterion is met.

The hardware implementation for spread detection is shown in the block diagram, Figure 6-9. The video input is from a CCTV camera with standard TV format (525 lines, 60 fields per second, interlaced 2:1). The synchronization (sync) from the CCTV camera is used to generate an active line signal which gates a video comparator to produce a threshold output only during the central 80% of each TV scan line. This, along with the application of a small amount of low-pass filtered video to the comparator, in addition to the varibale threshold voltage, helps compensate for TV camera shading. The threshold output is integrated during each TV field and the integrator output compared with preset upper and lower limits (UL and LL) in a double-ended limit detector at the end of each TV field (STROBE). The AREA limit detector output is held during the next TV field, but the integrator is reset to allow operation during the next TV field. The time window generator and counter input logic allow only valid threshold crossings to be counted during each TV field. The count at the end of each TV field is held in a register which may also be read by the computer; the counter is reset during vertical retrace in preparation for the next TV field. The 8-bit COUNT held in the register is converted to an analog voltage (in the DAC) and compared with preset upper and lower limits in the same manner as the AREA limit detector. Spread presence (SP) is indicated when AREA and COUNT are both within limits.

The slide search operation is carried out with the computer moving the stage in a systematic pattern. Search patterns available for operator selection include horizontal or vertical boustrophedon and rectangular spiral. The stage

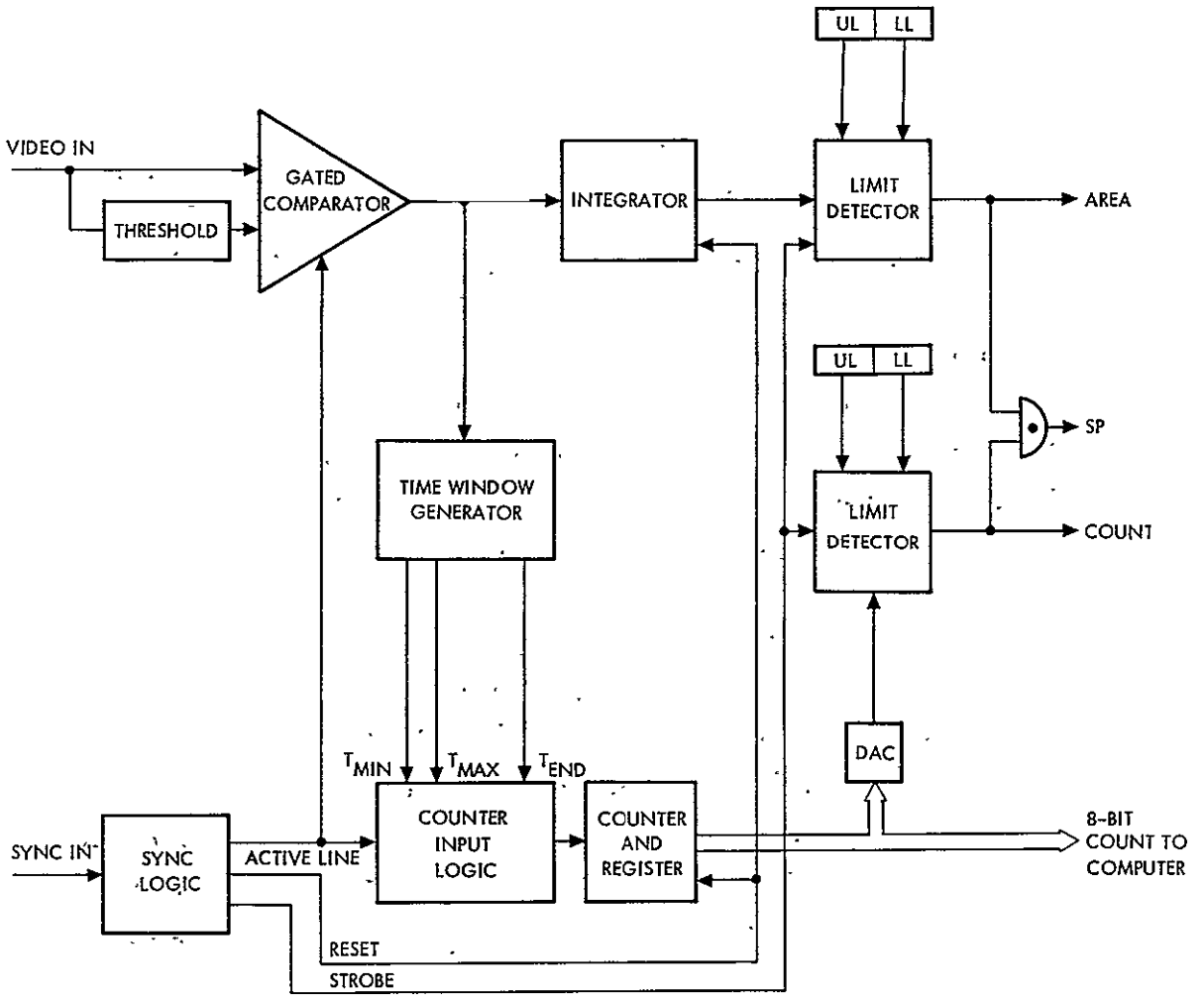

AREA - THE AREA DARKER THAN THRESHOLD IS WITHIN PRESET LIMITS.
COUNT - THE NUMBER OF VALID THRESHOLD CROSSINGS IS WITHIN PRESET LIMITS.
SP - AREA AND COUNT BOTH TRUE INDICATE SPREAD PRESENCE.

Figure 6-9. Spread presence hardware block diagram.

is made to pause at regular intervals corresponding to contiguous TV fields of view. The 150 millisecond pause permits stage settling and fading of any residual image on the TV camera tube. The computer then accesses the spread presence parameter. If SP = 1, the stage X and Y coordinates are accessed and stored in an array in computer memory so that such stage positions may be revisited later. If SP = 0, the stage moves again without logging the stage position. In one optional mode of searching, the stage remains at each spread position for image evaluation until the operator pushes a button to resume. In another optional mode, the microscope undergoes an auto-focus sequence at equidistant points along the search path.

b. Automatic Focusing

Focusing is accomplished by maximizing either of the two focus parameters, or both. Integrated optical density (IOD) above a threshold is one of the measures of focus quality which has been implemented (Ref. 6).. Kujoory and Mendelsohn describe the algorithm in detail (Ref. 7). It assumes that the best focus is obtained when the integrated optical density of the specimen above a threshold is maximized. The other focus measure is high spatial frequency content. An image loses high spatial frequency energy as it goes out of focus. High spatial frequency energy content can be determined from the amount of video power present at high temporal frequency. For either method (IOD or high frequency), the hardware generates the parameter relating to focus quality and the computer drives the microscope stage in the focus direction so as to maximize the parameter.

The focus parameter hardware is shown in Figure 6-10 in block diagram form. To obtain the high frequency focus parameter, the input video is passed through a bandpass filter, rectifying gated amplifier, integrator and analog-to-digital converter (ADC). The sync logic controls the operation of the hardware. The bandpass filter is a simple R-C network having upper and lower cutoff frequencies of 2.5 MHz and 150 kHz, respectively. These frequencies correspond roughly to the fundamental frequency range of the chromosomes and represent a compromise between high frequency signal and high frequency

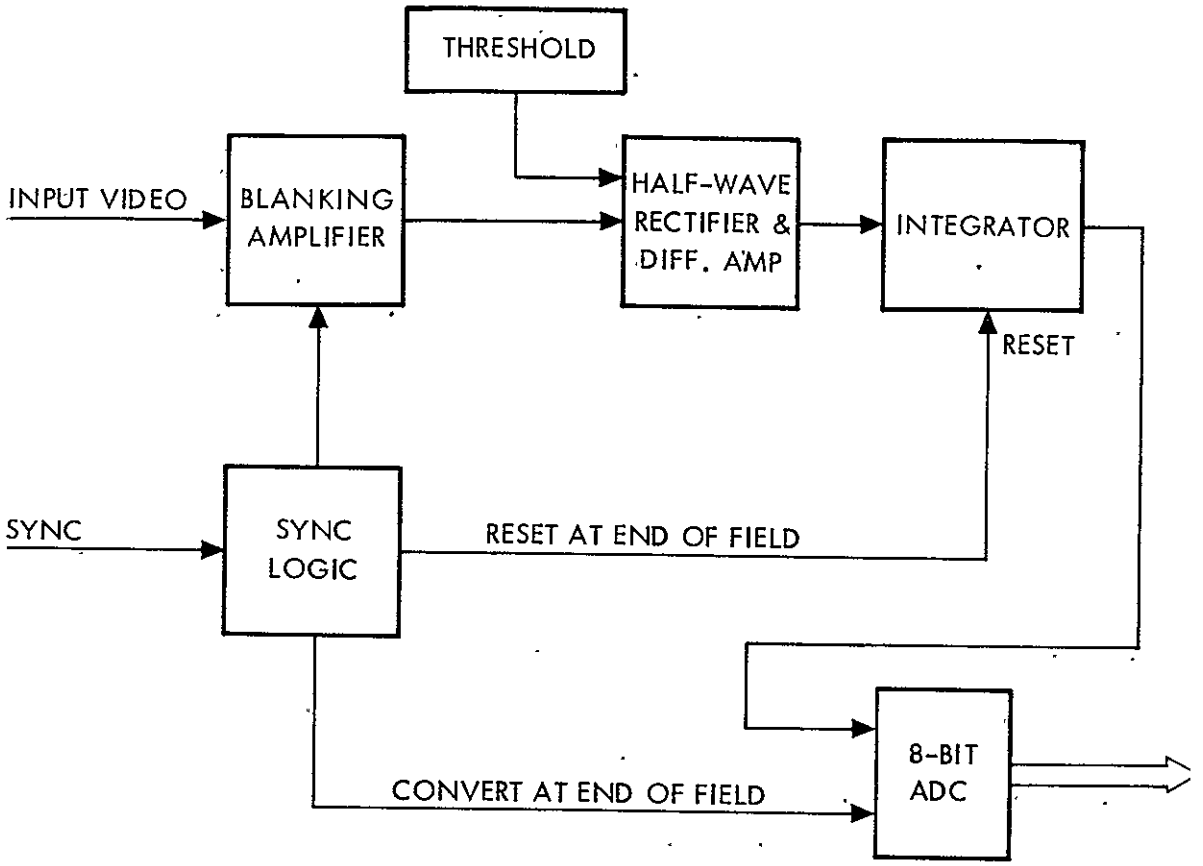

- MAXIMIZE INTEGRATED OPTICAL DENSITY ABOVE THRESHOLD

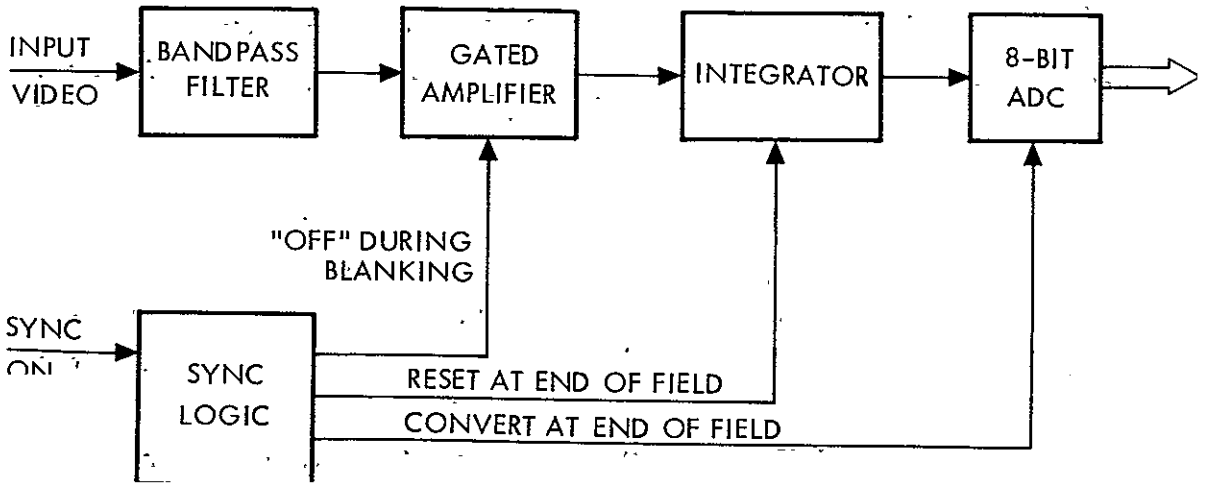

- MAXIMIZE HIGH FREQUENCY CONTENT

Figure 6-10. Focus parameters hardware block diagram

noise. The gated amplifier is turned off during blanking to prevent sync information from contributing to the high frequency content. The integrator is reset at the end of each TV field after analog-to-digital conversion.

The integrated optical density focus parameter is obtained by integrating the output of a high frequency operational amplifier, which functions as a blanking amplifier, and a precision half-wave rectifier and differential amplifier with variable offset (threshold). This is shown in Figure 6-10. The integrator output is digitized at the end of every TV field and the integrator is reset. The output of the half-wave rectifier and differential amplifier is an amplified positive replica of video which corresponds to an optical density above the IOD threshold during the active TV lines. As can be seen from the waveforms of Figure 6-11, the blanking serves to force the video below threshold (in terms of optical density) during the line sync-time intervals. Optical density is not directly proportional to the video signal but is related to its logarithm. However, for fairly low density objects, such as chromosomes, this approximation does not introduce significant error (Ref. 7).

A flow diagram of the basic focus algorithm for optimizing the focus parameter(s) is shown in Figure 6-10. Initially, the focus parameter word (F) is read by the computer. If F is sufficiently large, indicating image presence, the first move is commanded in an arbitrarily fixed direction along the Z or focus axis. The computer pauses 150 milliseconds for stage and CCTV settling and reads the new F. This move-read sequence is repeated as long as F increases. When F decreases after a move, a reverse move is made toward the peak F position. If the stage is initially positioned on the other side of peak F, the first move will cause a decrease in F. In this case, the direction will be reversed and then the move-read sequence is carried out as described. The uniform size of each Z move is determined chiefly by the depth of the objective lens. The move must also be large enough for the circuitry to provide statistically significant parameter value differences in the presence of video noise. The move sizes used are 0.25 and 1.0 microns with 100X and 40X objectives, respectively. The Z axis stepping motor provides movement in steps of 0.1 micron at the rate of 250 steps per second.

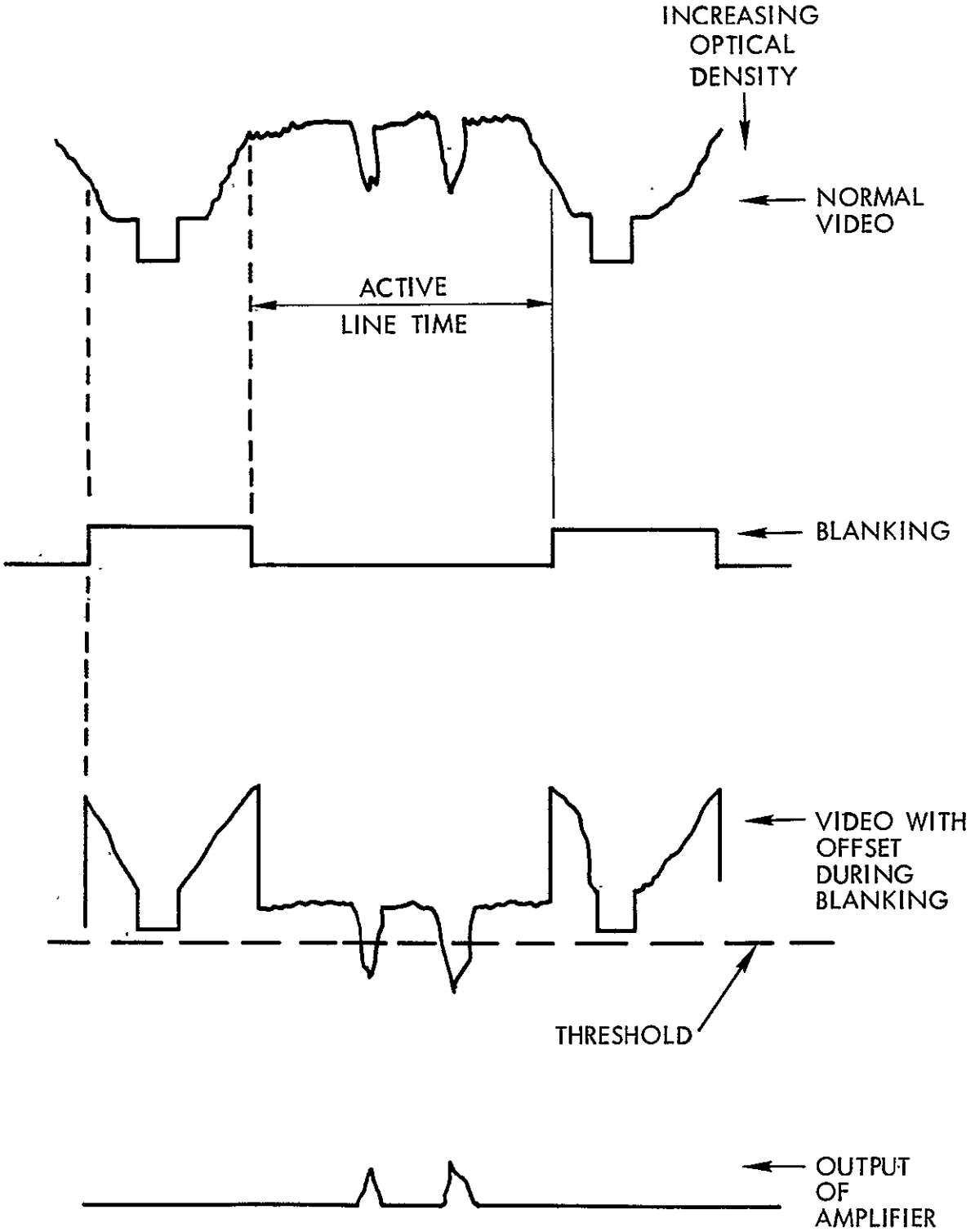

Figure 6-11. IOD waveform

d. PDP-11 Interface

The two 16 - bit words corresponding to the spread presence and focus quality parameters are input to the MCI, along with a "Data Ready" signal. The MCI provides the interface to transfer the parameters to the PDP-11, provided the stage stepping motors have not been pulsed for at least 150 milliseconds.

D. INTERACTIVE GRAY LEVEL DISPLAY UNIT

1. Functional Description

The interactive gray level display unit is used to:

1) Display to the operator computer-processed digital pictorial information.
2) Provide man-machine communication of pixel locations within the displayed image to allow operator interaction.

The unit must therefore provide the functions of image storage, display, interaction and computer interface.

2. Design

Figure 6-12 represents a simplified overall block diagram of the display system. The functions of the component blocks are as follows:

1) Scan converter - provides image storage function using a silicon target electrical output storage tube.
2) TV monitor - provides the display function.
3) Cursor control - provides for operator interaction.
4) Interface and controller - computer interface.

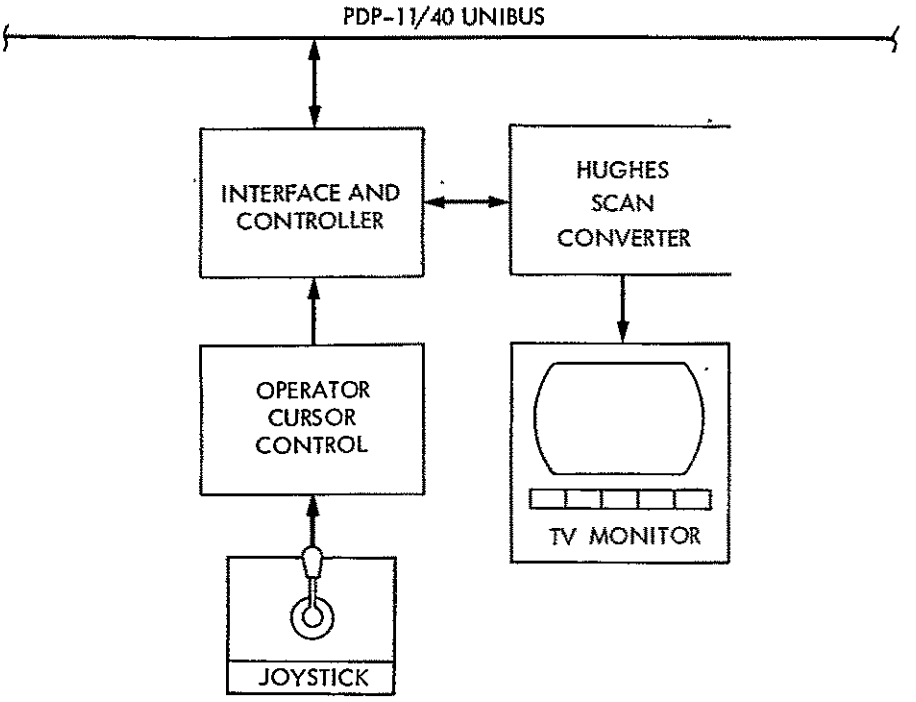

Figure 6-12. Interactive gray level display unit

a. Scan Converter

A Hughes Model 639 Scan Converter is used. It can accept and store gray level image data at various rates and output the information in a standard TV video format. In this application the image storage area is defined as 1024 X 1024 pixel matrix on the image storage medium, the silicon target of an image storage tube. Step voltages are provided for the X and Y deflections to write information into the matrix. Using this approach, data may be selectively written or erased (within the unit's erase resolution) from any portion of the matrix. The unit reads the matrix area with standard TV vertical and horizontal deflection signals. It is able to read an image for about 20 minutes before the image quality begins to deteriorate noticeably.

The 639 unit has the additional features of a cursor and a zoom. The cursor is superimposed on the video output of the unit and is therefore non-destructive to the stored image. The position of the cursor on the display is

controlled by the operator. It is used to correlate a position on the TV screen display with the corresponding pixel location in the computer.

The zoom feature allows the operator to magnify any area of the displayed image up to 36 times. The cursor cannot be used when the zoom is on, as position correlation is lost by the zoom.

Given below for reference are some of the important performance specifications of the Hughes 639 Scan Converter.

(1) Input: Images for display are input to the scan converter from the computer interface with the device in an X-Y write mode. Deflection inputs, X and Y, determine the position of the writing beam. Beam intensity is controlled by the write video input.

1) Step response (large signal) - less than 5 μsec to within 1% of final postion.
2) Linearity - better than 1%.
3) Unblank - controls writing or erasing the stored image during write or selective erase modes. Unblank time is less than 10 μsec per pixel to write full white with the proper write video level.
4) Storage.

   a) Image Fade. The storage medium is capable of storing the complete digital picture output from the computer interface for at least 20 minutes without noticeable fading of the displayed image on the monitor.
   b) Resolution. Storage tube resolution is greater than 1350 TV lines per target diameter at 50% modulation.
   c) Erase Characteristics. Stored pictures are erasable within 67 milliseconds; this includes priming required to produce a uniform display after erasure (i.e., no residual image). Selective erasure is possible with a maximum of 3 pixels in each direction affected in addition to the desired area.

d) Write Characteristics. Selective writing of any number of pixels is possible. At least 10 distinct gray levels (logarithmic)) are visible in the displayed image.

(2) Output:

1) Format. The read video output for image display is compatible with closed-circuit TV requirements. A 1029 line scan, 60 Hz field rate with 2:1 interlace (30 Hz frame rate) is provided. The output may be viewed on a standard high resolution TV monitor.

2) Picture Quality. When viewing computer-generated pictures (including flat-field, gray scale, or vertical/horizontal bar test patterns) there are no artifacts visible on the display. These include lines, streaks, or patterns caused by intensity or position errors, defocusing, and system noise. Combinations of light and dark pixels do not cause "ghosting" or similar phenomena. Signal-to-noise ratio is at least 25 db (p-p video to rms noise) with a bandwidth of 20 MHz.

3) Operating Modes, Commands and Controls.

a) Modes. The following modes are indicated by continuous status signals at TTL levels.

1) Read.
2) Write.
3) Erase.

The unit is in the read mode unless one of the following commands is received:

1) Erase - This command (a pulse greater than 1 microsecond in duration) causes complete erasure of the storage target and leaves no residual image visible on the display. It requires no more than two TV frames or 67 milliseconds.

2) Selective Erase - The unit remains in this mode as long as the command line is true. Actual area erased is controlled by X and Y deflection inputs and the unblank input.

3) Write - For the duration of this command, writing the stored image is controlled by X and Y deflection inputs, the unblank input, and the write video input.

b) Controls and Indicators. The following controls and indicators are provided:

1) Power - On/Off. Controls power to the unit and indicates condition.

2) Zoom - On/Off. Allows use of electronic magnification to view a selected portion of the stored image.

3) Zoom-Controls. Select desired portion of stored image in read mode.

No additional controls are required for operation of the unit other than calibration or initial set-up. Such controls which are on the front panel are lockable to prevent inadvertent use.

c) Cursor. A cursor consisting of a dot or crosshair appears on display only when the unit is in the read mode with zoom off and an external cursor control input is true. A flashing mode for the cursor is available. The X-Y position of the cursor on the display is controlled by two cursor position inputs analogous to the deflection inputs.

b. TV Monitor

A standard rate, 1029-line high resolution TV monitor is used to display the Scan Converter's read mode video output with superimposed cursor. A Conrac type CQF 14/R is used for this purpose.

c. Cursor Control

This unit allows the operator to position the cursor on the TV monitor by means of a joystick and pushbuttons. The joystick provides rate control of cursor motion for fine positioning as well as a high slew rate. The unit is very similar to the MCI's X-Y joystick for microscope stage control by the operator and was built at JPL.

E. HARDCOPY PICTORIAL OUTPUT DEVICE

1. Functional Description

This device is used to generate hardcopy permanent output of computer generated and/or processed gray level pictorial data with appropriate graphic and alphanumeric annotation. Specifically, pictures of chromosome spreads before processing and the computer-generated karyotype output are recorded along with patient I. D. information, reference gray scales, histograms, etc.

2. Design

a. General

We selected an electrolytic facsimile type image recorder proposed by the Alden Corp. and elected to build the computer interface at JPL. Alden's bid was the only one meeting our requirements at reasonable cost. Other firms now have more desirable units available.

The hardcopy interface, through a standard DEC DR11-B general purpose direct memory access interface to the PDP-11 unibus (Ref. 8), controls the operation of the recorder to produce pictorial hardcopy output from digital images stored on disk data sets. The output typically consists of 1000 lines of pixels each. Pixels may be recorded at one of 16 gray levels. Pixel spacing is 96 per inch resulting in an image approximately 10 inches square on the 11 inch wide recording paper.

b. Recorder

To produce a hardcopy output, electrosensitive paper is pulled through the recorder at a constant rate. An endless loop electrode perpendicular to the direction of paper drive provides a linear writing edge for the length of each scan line. Beneath this electrode is a helical wire mounted on a drum; the paper is fed between the two electrodes. The intersection between the helical wire and endless loop electrode forms a writing point which becomes a "flying spot" when the drum is rotating. Thus a single line is recorded for each drum revolution. The gray level is determined by the current passing through the paper at the writing point and is controlled by 4 pixel value lines to produce 16 different levels. The pixels within a line are clocked by an optical encoder which generates 1024 clock pulses per line. The start of each scan line is indicated by a single pulse on a separate line.

Once the command to record a frame is received from the computer, the recorder demands pixels from the computer interface at the desired rate (8.2 kHz). Input data is available one line at a time starting with the top line in the image. Within each line, pixels are placed on the hardcopy from left to right; the standard format is 1000 pixels per line. The number of lines per frame is variable, but typically about 600 lines are used.

Hardcopy output from a full 1000 × 1000 pixel frame is available within 135 seconds (2 1/4 minutes) after the start frame command. The output image may be either in shades of gray from black to white or color toned for a more pleasing appearance or greater visibility depending on the type of recording paper used. The hardcopy output produced is advertised as permanent and not subject to fading with normal handling.

Single element wide lines and alphanumeric characters are clearly visible (either dark lines on a white background or vice versa). Resolution is such that individual pixels are just visible in a mid-gray level background.

All operator controls are conveniently arranged. Minimum calibration and setup effort is required; once per 8-hour shift is normally adequate. Normal operation is under computer control. Maintenance and troubleshooting can be performed independently of the computer interface. Paper loading and removal of finished hardcopy output are simple tasks.

c. PDP-11 Interface

The JPL-built hardcopy interface controls the recorder paper drive and synchronizes the data transfer with the pixel clock and line start signals from the recorder. The interface also requests data as needed from the computer via direct memory access (DMA) and has error-detecting logic. An off-line mode to verify recorder operation is also available. The computer obtains the data for output from the disk data set and sets up the DR11-B for DMA transfer of each line formatting the data as necessary. This is a low duty cycle operation. The hardcopy recorder receives pixels at a rate of 8.2 kHz continuously during output.

The following section gives a detailed description of the operation of the hardcopy interface. The front panel layout appears in Figure 6-13.

d. Interface Operational Details

Modes of Operation

1) OPERATE - operation controlled by the PDP-11 through a DR11-B.
2) TEST - operation controlled by the operator to check and calibrate the hardcopy recorder.

Controls and Indicators (see Figure 6-13).

1) Mode switch and indicators - OPERATE or TEST mode as controlled by the mode switch is displayed on the appriate indicator.

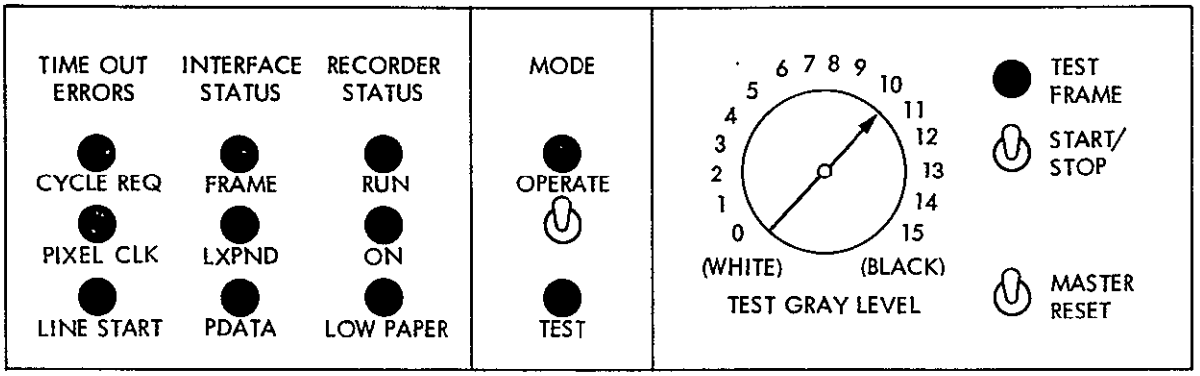

Figure 6-13. Hard copy test panel

2) Test mode.

a) TEST GRAY LEVEL - selects the desired gray level (0-15) by means of a rotary switch.

b) TEST FRAME - indicates a test frame in progress.

c) START/STOP - controls test frame (push-to-start, push-to-stop).

3) Recorder status - functional in both OPERATE and TEST modes.

a) LOW PAPER - on when recorder paper supply is low.

b) ON - indicates when recorder power is on.

c) RUN - on when paper is moving through the recorder.

4) Interface status (LXPND and PDATA modes explained later).

   a) FRAME - on during output (OPERATE or TEST mode).
   b) LXPND - indicates Line Expand mode (OPERATE mode only).
   c) PDATA - indicates Packed Data mode (OPERATE mode only).

5) Timeout errors.

   a) CYCLE REQ - data not transferred from computer fast enough.
   b) PIXEL CLK - clock pulses from recorder are too slow.
   c) LINE START - line start pulses from recorder are too slow.

6) Reset/Initialize - depressing MASTER RESET, powering up the hardcopy interface, or receiving the initialize (INIT) signal from the DR11-B will halt any output in progress and initialize the interface.

SECTION VII

SYSTEM SOFTWARE

A. OVERVIEW

The software for the system is arranged in a hierarchy diagrammed in Fig. 7-1. All software runs under the DOS (disk operating system) monitor supplied by DEC. The functions of maintenance and calibration and the interactive statistical analysis run directly under DOS. Automatic karyotyping, whether in production or in a research mode, runs under a specially written supervisor which handles program overlays, input/output, and label processing.

The software for automated karyotyping is divided into packages for microscope control, analysis, and pictorial output. The two major programs which provide microscope control are SEARCH, used for metaphase spread location, and SCAN, used for image digitizing. The analysis package consists of three major program groups: FOB, the object locator, MOB, the chromsome measurement program routine, and KTYPE, the program for classification and karyotype generation.

B. SUPERVISOR

The specially written CALMS supervisor performs the following functions: (1) it controls the loading and execution of programs and program overlays; when one program terminates, the supervisor handles the core image loading, and initiation of the next program in the partition; (2) the supervisor provides for communication between the operator and the programs and between programs by means of its parameter processing; parameters from the operator or from the previous program execution are passed to subsequent programs by the supervisor; (3) the supervisor handles input/output between the computer and the various peripheral devices and between devices; (4) the supervisor controls the allocation and usage of disk data sets by the various programs; and (5) the supervisor handles processing of the label records attached to each digital

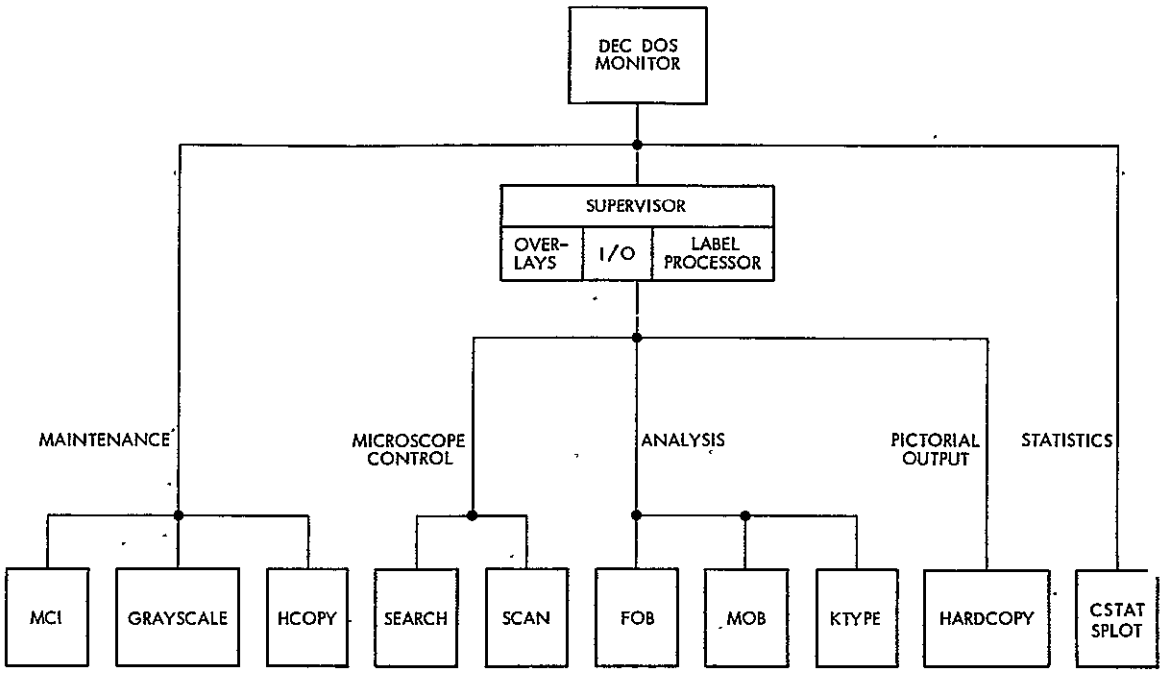

Figure 7-1. Software hierarchy

image; label records contain image size information, patient identification, and other alphameric information.

1. Memory Partitioning and Allocation

The System Software fits into 64K bytes of core memory. As explained in Section III, the memory is divided into partitions for three simultaneous tasks, slide search, chromosome spread analysis, and pictorial output generation. Figure 7-2 shows in more detail the allocation of core memory. The DOS monitor occupies the lower 12K bytes of core. The next 4K bytes contain the CALMS supervisor including the software required to operate the pictorial output recorder, as well as the spread queue which stores the stage coordinates of metaphase spreads.

The address space between 16K and 24K contains the general-purpose subroutines required by the supervisor and the analysis programs, in addition to

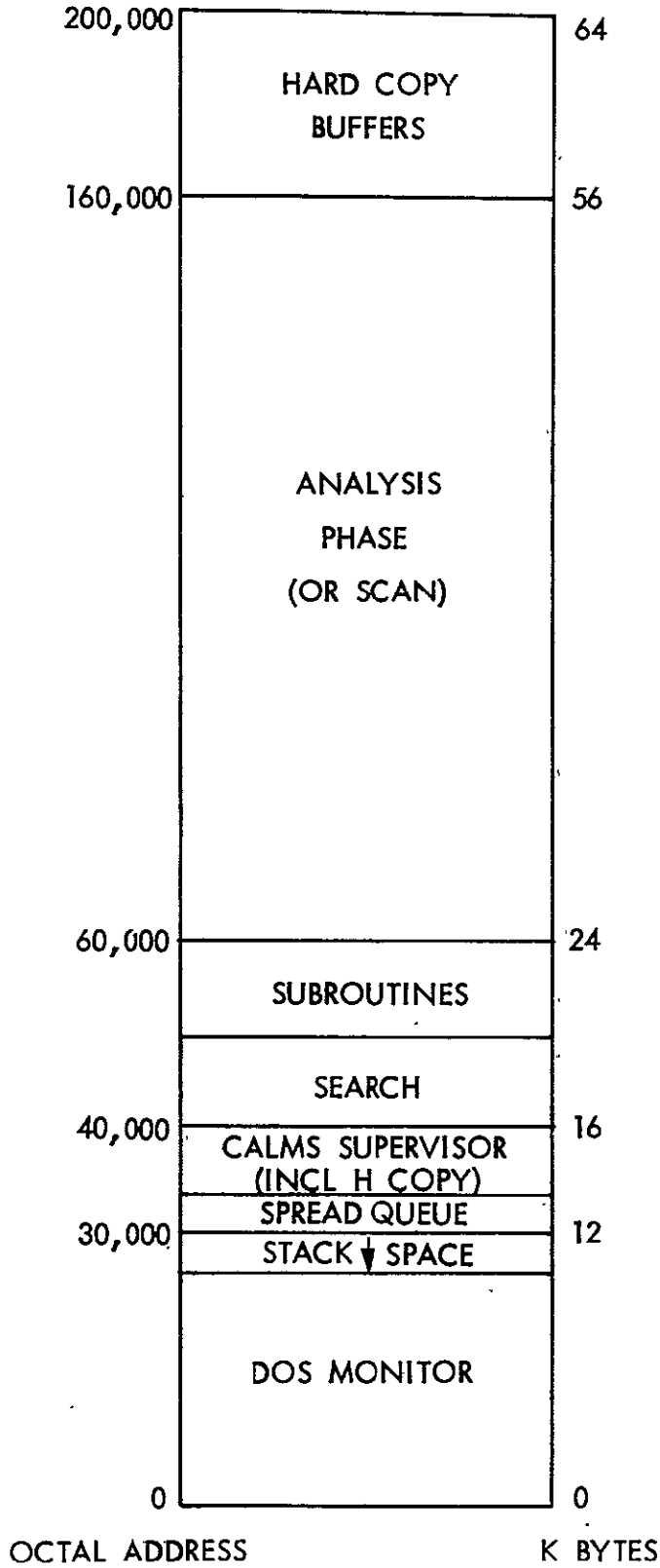

Figure 7-2. Core memory allocation

program SEARCH which controls the microscope during the chromosome spread location operation. The analysis partition is located between 24K and 56K. During the analysis of a cell, the various program phases are overlaid one after another into this partition. The individual phases themselves are discussed later in this section.

Program SCAN is overlaid into the partition analysis when images are to be digitized. Program SCAN operates the image digitizer and defines the variable gray level thresholds used by the object location programs.

The address space between 56K and 64K is used to buffer the raw spread and karyotype images from disk data sets out to the pictorial output device.

2. Disk Allocation

The computer system (see Section V) has three disk drives, each of which has two 2.5 million byte disk cartridges. On each drive, one cartridge is fixed and the other is removable. Figure 7-3 illustrates the utilization of each of the disk cartridges. The even numbered disk cartridges are fixed while the odd numbered cartridges are removable. Main programs and sources are stored on DK0 with a backup on DK2. The phase overlays are rolled in from DK5 which also contains three scan data sets and several of the intermediate data sets. Completed images are buffered out to hard copy from DK3 with a backup on DK1 which also contains intermediate data sets. The statistical data sets are stored on DK4.

C. SLIDE SEARCH SOFTWARE

Program SEARCH performs the automatic slide search required for metaphase chromosome spread location (see Figure 3-6). It is resident continuously when the system is running in the karyotyping mode. SEARCH takes commands from the stage keyboard and operates the three microscope stage drive motors. Its functions are to exercise the microscope stage in various search patterns, to check the spread presence parameter generated by the autofocus and spread detector unit, to accumulate a queue of chromosome

DK0 : MAIN PROGRAMS AND SOURCES

DK1 : INTERMEDIATE DATA SETS
BACKUP HARD COPY DATA SETS (2)

DK2 : BACKUP COPY OF DK0

DK3 : HARD COPY DATA SETS (2)

DK4 : STATISTICAL DATA SETS

DK5 : PHASE OVERLAYS
SCAN DATA SETS (3)
INTERMEDIATE DATA SETS

Figure 7-3. Disk allocation

spread stage coordinates, to implement periodic automatic focusing using the focus parameters from the autofocus unit, and to return the stage to the chromosome spreads in the queue at the operator's request.

Program SCAN is overlaid into the analysis partition for the purpose of digitizing spread images. This program generates the identification label for each cell, allows the operator to set the spatial extent and optical density limits of the digitization, commands the image digitizing system buffering the data onto disk and the gray scale display, compiles gray-level histograms of fifty-six sectors of the image, and computes the initial gray level threshold for each sector. Thus, it not only digitizes the image, but performs the first step of object location, determining the variable gray level thresholds. Program SCAN commands the image digitizer in the "sample and increment" mode. It runs the digitizer near full speed, completing a full 480 by 512 point scan in 17 seconds, or, if the hard copy unit is running, 20 seconds. When SCAN is

finished (after as many as 3 scans), the operator may reactivate SEARCH and continue the analysis of the digitized spreads.

D. CHROMOSOME ANALYSIS ALGORITHMS

The analysis of a chromosome spread can be divided into three phases, (1) object location which defines the boundary of each chromosome thereby separating it from the background, (2) chromosome measurement in which the measurement data required for classification is determined and (3) chromosome classification which assigns each chromosome to its group or homologous pair type for the preparation of a karyotype image.

1. Object Location

The object location algorithm used by the system is a two pass variable threshold technique which assigns a boundary to each chromosome based on a spatially variable threshold gray level. The algorithm places the gray level threshold midway between local background gray level and the median gray level inside the chromosome boundary. In the first pass the image is divided into fifty-six disjoint sectors each approximately 64 by 64 elements. A gray level histogram is computed for each sector. For sectors having a bimodal histogram the threshold is set midway between the two peaks. The sectors containing background only produce unimotal histograms and are ignored in further analysis.

In the first segmentation pass the chromosomes are given provisional boundaries based on the local threshold in the sector in which they lie. Connected sets of points above local threshold are defined as single isolated objects. If a chromosome overlaps two or more sectors its boundary may have slight discontinuities due to changes in threshold gray level. This is not critical for the first pass boundary.

The provisional boundary of each chromosome is extended outward in all directions by three pixels (about one-half micron). The chromosomes, with

their enlarged provisional boundaries, are then extracted from the raw spread image. During the extraction process a gray level histogram is compiled for each chromosome image. Each chromosome is then assigned a final threshold gray level midway between local background gray level (as determined from the histogram of its principal sector) and the median gray level within the chromosome as determined from its histogram. Each extracted chromosome is re-thresholded at its new threshold gray level to define its final boundary. This completes the object isolation phase giving each chromosome a boundary optimized for its contrast and the local background gray level.

2. Chromosome Measurement

The next step in the analysis is the orientation and measurement of each chromosome in the image. The orientation angle of each chromosome with respect to the sampling raster is determined in the following way. First the boundary of each chromosome is rotated through 90 degrees in 32 equal steps. After each step a minimum enclosing rectangle with sides parallel to the sampling grid is enclosed around the boundary. When the chromosome passes through vertical or horizontal orientation the area of this minimum enclosing rectangle is minimized. The angle which produces minimum rectangle area and the side ratio of the minimum rectangle determine the orientation angle of the chromosome. Then the entire chromosome image is rotated through the angle required to bring it to the vertical.

This process generates a set of isolated and vertically oriented chromosomes in an intermediate data set. A parabolic axis is fitted through the banded chromosomes determined to be bent. The axis of straight chromosomes is assumed to be vertical.

The program considers a chromosome bent if the vertical centerline of the enclosing rectangle exits the chromosome boundary. A staining density profile waveform is generated for each banded chromosome by averaging density across the chromosome normal to its axis. The width profile is used to determine centromere position.

Chromosome measurements are determined next. Area is taken as the total number of picture points inside the chromosome boundary. Length is taken to be the axis length of the chromosome and integrated optical density is the sum of the gray levels of all points inside the boundary. Centromeric index is computed as the ratio of long arm size to total chromosome size. This is done separately on the basis of each length, area, and integrated density. For banded chromosomes the first eight terms of the Fourier series expansion are computed for each profile. The complex coefficients are converted to polar form (amplitude and phase).

In summary, the measurement process orients each chromosome and extracts from it measures of overall size, centromere position, and, for banded chromosomes, a compact Fourier representation of the staining profile.

3. Chromosome Classification

The final step in the analysis is the classification of the chromosomes. Homogeneously stained chromosomes are classified on the basis of length and centromeric index computed by area. The two-dimensional measurement space is divided into regions for each karyotype group by a set of piecewise linear decision lines. Initial assignments are made and then chromosomes are moved to balance group membership. Several of the group boundaries overlap in the area between adjacent groups. Chromosomes falling in the area of overlap may be assigned first to one group and then moved into another to bring group membership into balance.

a. Fourier Classifier

Banded chromosomes are assigned to autosomal types through the use of a distance function. The distance measure is expressed by:

$$D_{jk} = \sum_{i=1}^{14} \left[\frac{x_{ik} - \mu_{ij}}{\sigma_{ij}} \right]^2$$

where D_{jk} is the distance of unclassified chromosome k from chromosome type j, X_{ik} is the value of the ith measurement from chromosome k, and μ_{ij} and σ_{ij} are the mean and standard deviation, respectively, of measurement i for chromosome type j. The fourteen measurements used are length, centromeric index by area, the first seven Fourier amplitudes (excluding zero frequency), and the first five Fourier phase angles.

The value of the distance function is small when the measurements from a particular chromosome agree closely with those measurements for that type of chromosome in the training set. The means and standard deviations were determined from a hand classified training set.

A distance matrix is generated in which the rows are unclassified chromosomes and the colums are slots, two for each autosome type and one or two for X and Y depending on sex. The elements of the matrix are the values of the distance function for each unclassified chromosome and each chromosome type. Chromosomes are assigned to autosomal types in ascending order of the distance function value. Thus the smallest entry in the distance matrix determines the first assignment. After that assignment is made that chromosome and that slot are removed from further consideration. As this process continues the most confident decisions are made first leaving less reliable decisions until later when parity considerations have a stronger influence.

b. Hybrid Classifier

This classification scheme is an optional alternative to the Fourier Classifier for banded chromosomes. It is a two-pass classifier first using the homogeneous classifier to group the chromosomes and then a set of heuristic procedures to pair them. Assuming the chromosomes are correctly grouped, they are paired as indicated below.

A Group — Already paired by length and centromeric index.

B Group — The two chromosomes with the highest average density between the centromere and the midpoint are the B-4s.

C+X Group — Fourier classifier as before.

D Group — Compute the ratio of average density above to average density below the midpoint. The two chromosomes having the smallest value are assigned to D-13, the two largest to D-15 and the remaining two to D-14.

E Group — E-16s are identified by length and centromeric index. Measure the distance between the two darkest bands. The two with the largest distance are E-17, the remaining two are E-18.

F Group — The two with largest IOD are F-20, smallest F-19.

G+Y Group — The two with their darkest band fartherest from the midpoint are the G-22s. If three remain the one with largest IOD is the Y.

E. ANALYSIS PROGRAMS

A series of program phases are overlaid into the analysis partition to accomplish the transformation of a digitized spread image into a karyotype image ready for display. These phases are listed in Figure 7-4. Phases 1 through 5 implement the variable threshold object location algorithm. Programs MOB and BAND generate measurements for each chromosome, Programs CLASFY and FOUR classify chromosomes while Programs KTYPE and MASK2 prepare the karyotype image for output.

As previously explained, Program SCAN digitizes the spread image and computes the local threshold gray levels throughout the image. Program BINARY is the first pass object locator which sets the initial boundaries to separate the chromosomes from the background. Program SKIRT then extends the initial boundary to provide a margin for boundary expansion in the second pass thresholding. Program CHROME isolates the chromosomes and collects them in segmented form in a disk data set. Program ROB implements the re-thresholding step which defines the final boundaries of each chromosome. The output of ROB is a set of isolated chromosome images ready for orientation and measurement.

PHASE No.	PROGRAM	EXEC TIME (sec)	FUNCTION
1	SCAN	20	DIGITIZE SPREAD IMAGE
2	BINARY	8	SET INITIAL BOUNDRIES
3	SKIRT	4	EXTEND INITIAL BOUNDRIES
4	CHROME	14	COLLECT ISOLATED CHROMOSOMES
5	ROB	12	SET FINAL BOUNDRIES
6	NOB	10	INSERT SEQUENCE NUMBERS AND DISPLAY SPREAD
7	INT1	VARIABLE	PROVIDE SPREAD INTERACTION
8	MOB	20	ROTATE AND MEASURE CHROMOSOMES
9	CLASFY	1	ASSIGN CHROMOSOMES TO GROUPS
10	KTYPE	10	COMPOSE AND DISPLAY KARYOTYPE IMAGE
11	INT2	VARIABLE	PROVIDE KARYOTYPE INTERACTION
12	RESEL	2	SAVE MEASUREMENT DATA
13	MASK2	20	FORMAT IMAGES FOR HARDCOPY OUTPUT
14	BAND	30/15*	COMPUTE DENSITY PROFILE AND FOURIER COEFFICIENTS
15	FOUR	30/4*	IDENTIFY CHROMOSOMES BY TYPE
16	PREP	VARIABLE	PRINT PATIENT REPORTS
17	EDIT	VARIABLE	TEXT EDITOR
18	FORTRAN		RESERVED FOR FORTRAN COMPILER
19	ABNORM	VARIABLE	TEST FOR STRUCTURAL REARRANGEMENTS
20	KFIX	4	HYBRID CLASSIFIER

*FOURIER/HYBRID

Figure 7-4. Program phases

Program NOB inserts the object sequence numbers assigned to each chromosome into the raw spread image and displays the spread with each chromosome numbered. Program INT1 allows the operator to correct object isolation errors. He may cut apart touches, reconnect fragmented chromosomes, and delete objects.

'rogram MOB rotates the chromosomes to the horizontal and extracts measurements sufficient for classification of homogeneously stained chromosomes into groups, that is, size and centromere position measurements. Program CLASFY assigns the chromosomes to groups upon the basis of their measurements. Program KTYPE places the rotated chromosome images in position and adds annotation to form the completed karyotype image, and then displays it on the grayscale display. Program INT2 allows the operator to correct rotation, measurement and classification errors.

Program RESEL files the chromosome measurements in the statistical data sets KDATA and BDATA. Program MASK2 places the raw spread and karyotype images side by side, adds annotation and label information and formats the image properly for output to the hardcopy device.

Program BAND computes the low-order Fourier coefficients of the staining profile density waveform. Program FOUR identifies chromosomes by type based on size, centromere position, and Fourier coefficients. Program KFIX implements the hybrid classifier. Program ABNORM may be used to check for structural rearrangements of chromosomes. A text editor and FORTRAN Compiler are also available as phases although the FORTRAN Compiler is not currently operational.

A flowchart showing how the various phases are executed sequentially to accomplish karyotype analysis appears in Figure 7-5. Program SCAN digitizes the spread image and displays it on the Grayscale display unit. At this point program INT1 is brought in and the operator has several options. He may ask for a rescan possibly changing the scanning parameters, or he may ask for a quick count. In this case, Program BINARY is executed to implement the first pass object locator and flag each isolated chromosome on the Grayscale display. At this point the operator decides whether the spread is to be karyotyped

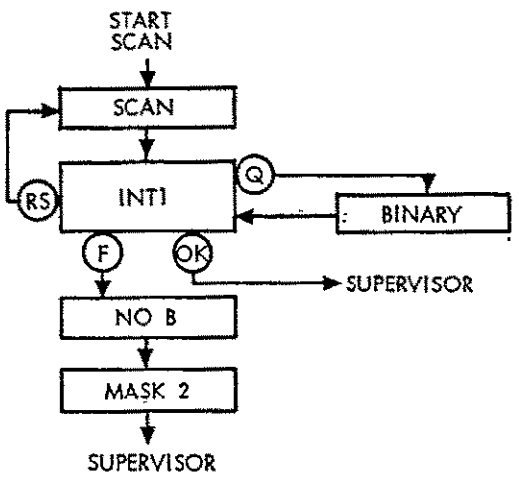

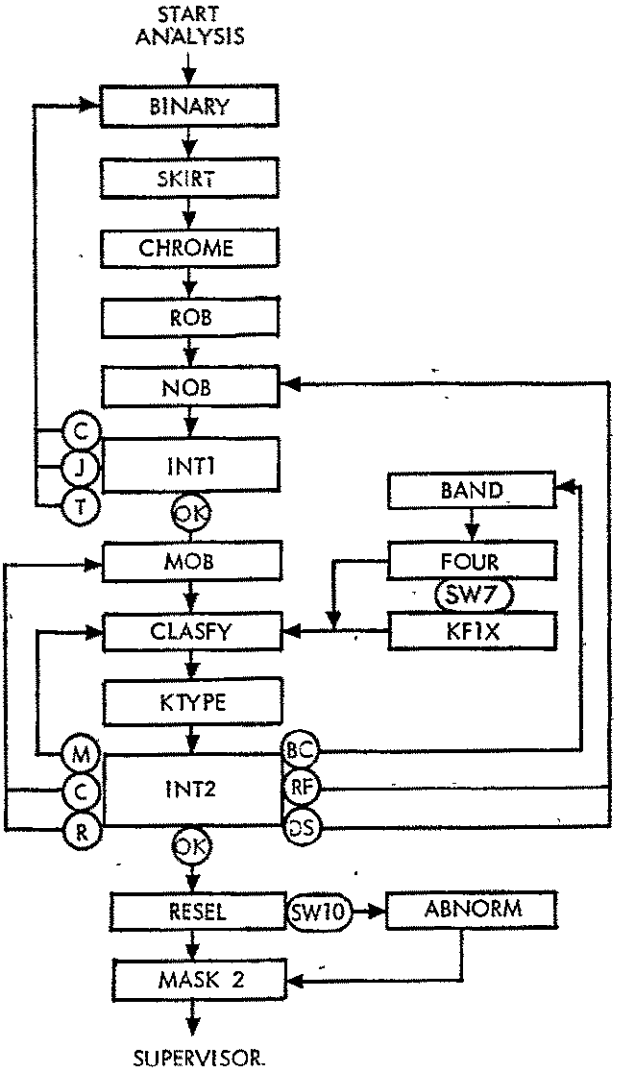

INT1 OPTIONS

RS - RESCAN

Q - QUICK COUNT

F - FINISH (COUNT ONLY)

C - CUT APART

J - JOIN TOGETHER

T - THRESHOLD ADJUST

OK - CONTINUE

IN2 OPTIONS

R - ROTATE CHROMOSOME

C - CORRECT CENTROMERE

M - MOVE CHROMOSOME

BC - BANDED CELL

RF - RE-EXECUTE FOB

DS - DISPLAY SPREAD

SWITCH OPTIONS

SW7 - HYBRID CLASSIFIER

SW10 - CHECK FOR ABNORMALITIES

Figure 7-5. CALMS program flow

or used for counting purposes only. If he takes the "FINISH" option Program NOB adds numbers to the chromosomes and Program MASK2 prepares the raw spread image and numbered image for playback on the hardcopy device.

If the cell is to be karyotyped program INT1 is followed by BINARY, SKIRT, CHROME, and ROB, in that order, to implement the two-pass variable threshold object location algorithm. Program NOB places the object sequence number beside each chromosome and program INT1 allows operator interaction. If there are object segmentation errors the operator may vary the local threshold, cut apart touches, or join fragmented chromosomes, and then re-execute the object location sequence. If there are no object segmentation errors Program INT1 is followed by MOB which rotates the chromosomes and extracts size and centromere position measurements. Programs CLASFY and KTYPE compose a karyotype image with chromosomes arranged by groups and display it on the grayscale unit. At this point the operator may correct measurement and classification errors via program INT2. If he indicates rotation or centromere position errors the supervisor returns to re-execute MOB to implement the corrections. If he indicates merely to move chromosomes about within the karyotype the sequence returns to CLASFY.

If the cell is homogeneously stained and correctly classified, the operator may approve it in which case RESEL will be executed to file the chromosome measurements and MASK2 will format the karyotype image for output. Optionally, the operator may elect to execute ABNORM to check the chromosomes for evidence of acentric fragments, polycentric chromosomes or chromotid gaps. If the specimen is a banded cell, the operator may request INT2 to execute the banded classifier. This causes programs BAND and FOUR to be overlaid and executed in sequence, thus identifying the homologous pairs. If the hybrid classifier is used, KFIX is also executed. Programs CLASFY and KTYPE are executed to produce a karyotype with homologs in proper position. Again INT2 displays the completed karyotype. At this point the operator's options are as before. The operator has two other options in INT2. He may elect to re-execute the object location sequence if he finds a chromosome isolation error that has escaped detection and propagated to the karyotyping stage. He may also request a display of the raw spread.

In this way the supervisor program processes operator requests generated in INT1 and INT2, overlaying and executing phases in the proper sequence to produce a karyotype of verified accuracy. The two interactive programs signal the operator via the DECWRITER when intervention is required. While the non-interactive phases are in execution, the operator is free to interact with SEARCH via the stage keyboard.

F. OUTPUT GENERATION

Program HCOPY is permanently resident when karyotyping is in progress. As soon as MASK2 prepares an image for output, HCOPY begins to buffer it out to the hardcopy device. The images go from disk data sets line by line into core and pixel by pixel out to the hardcopy device upon interrupt demand. Since HCOPY operates on interrupts, the slide search and analysis do not have to wait for picture generation.

G. STATISTICAL ANALYSIS

When karyotyping is not in progress, the operator may access the chromosome measurement database and perform statistical analysis on its contents. Programs CSTAT and SPLOT accomplish this running directly under the DOS monitor.

Program CSTAT can access specified cells in KDATA or BDATA and compute mean, standard deviation, and normalized standard deviation for any or all of the measurements. SPLOT generates on the line printer two-dimensional scatter plots of chromosome size versus centromeric index. Examples of the outputs of these two programs are shown in Figures 7-6 and 7-7.

H. MAINTENANCE AND CALIBRATION

Several programs are available to perform diagnostic and calibration functions for the various system components. Programs GS exercises the

CONVENTIONAL SOURCE 8
LENG MEASUREMENT

PATIENT ID	A-1	A-2	A-3	B-4	B-5	C-6	C-7	C-8	C-9	C-10	C-11	C-12	D-13	D-14	D-15	E-16	E-17	E-18	F-19	F-20	G-21	G-22	X	Y
REPLICATE	424	407	299	291	292	271	249	208	216	216	224	216	183	165	165	159	166	158	133	116	100	100	249	8
REC 98	0	0	0	0	0	0	0	0	0	0	0	0	0	0	0	0	0	0	0	0	0	0	0	8
REPLICATE	441	408	308	291	283	284	233	225	225	216	225	208	175	165	165	150	175	158	116	116	108	92	258	8
REC 99	0	0	0	0	0	0	0	0	0	0	0	0	0	0	0	0	0	0	0	0	0	0	0	8
REPLICATE	438	406	298	299	281	273	248	215	224	224	224	207	182	182	166	149	166	141	124	124	108	99	248	8
REC 100	0	0	0	0	0	0	0	0	0	0	0	0	0	0	0	0	0	0	0	0	0	0	0	8
REPLICATE	429	404	305	299	289	272	231	231	224	223	223	215	173	182	165	149	165	148	116	124	107	99	248	8
REC. 110	0	0	0	0	0	0	0	0	0	0	0	0	0	0	0	0	0	0	0	0	0	0	0	8
REPLICATE	427	411	304	297	279	279	238	238	222	222	222	213	181	164	164	156	172	148	123	115	107	99	246	8
REC 114	0	0	0	0	0	0	0	0	0	0	0	0	0	0	0	0	0	0	0	0	0	0	0	8
REPLICATE	427	402	304	296	279	271	238	239	222	213	222	222	181	164	164	156	172	148	123	123	107	99	246	8
REC 115	0	0	0	0	0	0	0	0	0	0	0	0	0	0	0	0	0	0	0	0	0	0	0	8
REPLICATE	438	413	306	299	289	281	231	231	224	215	223	215	174	165	165	157	165	148	116	116	107	91	248	8
REC 116	0	0	0	0	0	0	0	0	0	0	0	0	0	0	0	0	0	0	0	0	0	0	0	8
REPLICATE	434	418	306	297	279	287	238	239	221	213	221	205	188	188	164	156	164	139	123	115	107	98	246	8
REC 168	0	0	0	0	0	0	0	0	0	0	0	0	0	0	0	0	0	0	0	0	0	0	0	8
REPLICATE	428	412	305	298	289	289	239	206	222	222	222	205	173	173	165	148	173	148	148	124	99	99	247	8
REC 169	0	0	0	0	0	0	0	0	0	0	0	0	0	0	0	0	0	0	0	0	0	0	0	8
REPLICATE	438	405	289	299	289	254	248	231	223	223	223	207	165	165	165	157	165	148	124	132	116	99	248	8
REC 338	0	0	0	0	0	0	0	0	0	0	0	0	0	0	0	0	0	0	0	0	0	0	0	8
MEAN	430	408	301	292	284	276	238	224	227	219	223	211	177	171	165	153	168	144	124	121	107	98	248	8
STDV	4 4	3 5	4.9	4 1	4 2	6 5	5.8	9.6	2.3	4.2	1 1	5 3.	3 4	7 4	8 8	5 4	4 8	6 8	7.3	5 4	4 4	3 8	1.3	0 8
HOR STDV	1 8	0 8	1 6	1 4	1 5	2 3	2 1	4 3	1.3	1.9	0 5	2 5	3 8	4 3	8 5	3 5	2.3	4 2	5 9	4.5	4 1	3 1	0 5	0 8
NUM OF DATA	18	18	18	18	18	13	18	13	18	13	18	13	18	18	18	18	13	18	18	18	18	18	18	8

Figure 7-6. Output of CSTAT

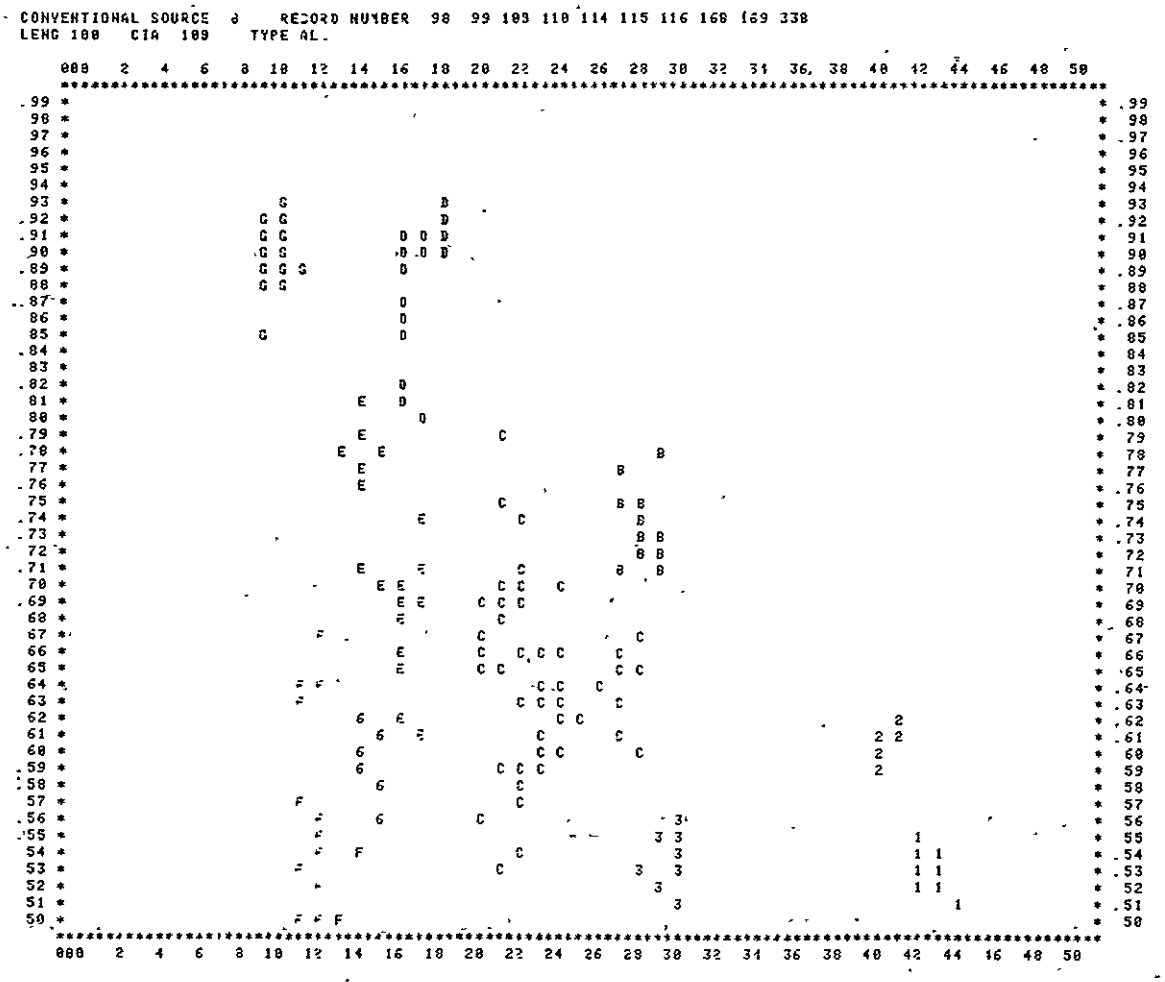

Figure 7-7. Output of SPLOT

the grayscale display for diagnostic purposes. It can generate and display grid and bar test patterns and selectively write and erase lines. Program HCOPY may be used to output to the hardcopy unit a test picture created by program GEN. Program MCI allows the operator to command stage motion from the DECWRITER for diagnostic purposes.

SECTION VIII

SYSTEM PERFORMANCE

A. INTRODUCTION

After system construction was completed, a test program was carried out to quantify system performance, evaluate its clinical and research usefulness, and point out directions of possible further development. This section summarizes the test program and its results. Tests were performed on the specimen preparation unit, the image digitizer, the automated microscope stage and the spread detector/autofocus unit. Finally, tests were made of the overall karyotyping efficiency of the complete system.

B. SPECIMEN PREPARATION UNIT

Specimens of whole blood were obtained from several sources as indicated below:

Source	No. of Specimens
Childrens Hospital of Los Angeles	147
Bio-Science Laboratories	917
USC Medical Center	2,350
City of Hope Medical Center	250
Loma Linda University Hospital	15
Total	3,679

The specimens from U.S.C. Medical Center were obtained from cord blood which was drawn for another project in hemagloblinopathies conducted by U.S.C. Specimens from other centers were obtained by mail or by carriers. The specimens from Bio-Science Laboratories originated from various States and occasionally from Canada and Puerto Rico. These specimens were sent to us after the laboratories established their own cultures, therefore the blood was from 2 to 6 days old upon arrival at our laboratory.

They were processed with the semi-automated specimen preparation system and were stained homogeneously with Giemsa-stain.

A total of 3679 specimens were utilized for testing the various components of the system.

The following technical tests were conducted.

1) Growth potential in culture trays.
2) Media.
3) Colcemid concentration and time.
4) Amount of blood.
5) Hypotonic concentration and time.
6) Shaker velocity and time.
7) Fluid dispenser flow rate.
8) Slide preparation unit.

1. Growth and Culture Trays

Approximately fifty trays were processed using a single source of blood to compare the performance of trays with that of culture tubes. Mitotic indices were determined on a sample of ten trays and ten tubes with favorable results. The mean index for trays was 5.2% and tubes 6.1%. Tests were also conducted to determine variability within trays due to possible residual compounds from the mold. In twenty trays, three wells showed a high pH and sparse growth. The source of the problem was not identified, but the possibilities were contaminants in the wells or in the Pasteur pipettes used for dispensing blood, or loose caps during the culture period.

2. Media

Tests were conducted on growth potential of the following media:

1) Hams F10 with 20% calf serum (GIBCO).
2) McCoy's medium with 20% calf serum (GIBCO).

3) DIFCO chromosome culture medium.

4) Lyophilized complete medium for chromosomes (GIBCO).

Although mitotic indices were not determined in these tests (conducted prior to the NICHD contract), it was determined subjectively that the growth promoting properties of the lyophilized medium was equal to or greater than the other three. The most important advantage of the lyophilized medium is the assurance of a single long term source of pre-tested medium containing all additives except the salt solution. A two-year supply in 100 ML bottles was purchased and little or no change in performance was noted during this time.

The time of culture in most protocols is 72 hours for lymphocyte cultures. This represents the peak of logrithmic growth in the first generation of cells. Because of the microculture nature of this system, however, fewer cells are available for analysis; therefore a 96 hour growth period was used. This timing provided a larger number of lymphocytes, some of them second generation in origin.

3. Colcemid Concentration and Time

A number of trials were conducted to determine the optimum concentration and exposure time for colcemid. Liquid colcemid from GIBCO was used in these tests with a range of concentrations from 0.005 to 2.0 micrograms per ml. It was found that concentrations in the range from 0.02 to 0.5 micrograms produced similar effects and a concentration of 0.05 micrograms per ml was selected.

Timing of 1, 1-1/2, 2, 2-1/2, and 3 hours in colcemid were compared, and the 1-1/2 hour time was selected on the basis of number of metaphases and length of chromosomes.

4. Amount of Blood

With the test tube system in the past, this laboratory has used 0.3 ml of blood in 6 ml of culture medium. The capacity of the culture wells is 3 ml but only 2.5 ml of medium is used. Trials were conducted with 0.15, 0.10 and 0.05 ml of blood in 0.5 ml of medium. It was found that 0.05 ml, which represents one drop from a 19 gauge needle, was optimal in this system. This small amount of blood provides in the final preparations less denatured protein which appears to interfere with chromosome spreading and Giemsa banding.

5. Hypotonic Concentration and Time

The hypotonic solution tested was potassium chloride in concentrations of 0.0375M, 0.05M and 0.070M and 0.075M. The lower concentrations of 0.0375M and 0.05M caused excessive cell breakage at 20 minutes exposure while 0.07M and 0.075M were suitable. We selected 0.070M for 20 minutes including centrifugation as optimal and used this schedule throughout most of the test period.

6. Shaker Velocity and Time

After centrifugation it is necessary to use vigorous agitation to resuspend the cells, while in later stages gentle agitation is needed to avoid cell breakage. It was found by successive trials that a speed of 200 oscillations per minute (O.P.M.) for twenty seconds was optimal for resuspension after aspiration of the culture medium. After hypotonic treatment and aspiration the speed is reduced to 100 OPM for five seconds. The same speed and time are used after the first fixation.

7. Fluid Dispenser Flow Rate

Different rates of flow are required for the addition of hypotonic fluid and fixative. Although quantitative tests were not conducted, subjective evaluation of the number of divisions in the final preparations indicated the optimun

rate to be used. The addition of hypotonic solution was adjusted to a setting of 100 drops per minute on the parastaltic pump. After hypotonic treatment and aspiration, the rate of flow was reduced to 60 drops per minute for fixative.

8. Slide Preparation Unit

In some instances, when specimens are exposed to long storage in fixatives, excessive hardening of the cells inhibits chromosome spreading. The addition of water to the slides before applying the specimens enhances spreading. We used the cell dispenser for this purpose. The dispenser is used to apply a drop of water and is then used to pick up cells which are dropped on the water.

To encourage cell separation and chromosome spreading, a variable air pressure unit was built into the system. Four tubes with conical shaped openings were mounted above the slide positions and connected to a regulated compressed air tank. It was determined by subjective evaluations that 20 psi pressure was optimal for cell and chromosome spreading.

Four heating units were installed under the slide positions with variable temperature controls. Gentle heating provides additional spreading and flattening of the metaphase cells. Using a thermistor probe the graduated control was calibrated for temperatures ranging from 37°C to 80°C. The temperature selected for warming the slides was 50°C.

Using the following criteria for estimating the quality of preparations for the frequency of mitotic cells, the newborn specimens were evaluated (Fig. 8-1):

Poor: One division or less in 3 fields with a 16X objective.
Fair: One division in 1 field with a 16X objective.
Good: More than 1 division in 1 field with a 16X objective.

Although only 224 cultures were evaluated, a total of 840 newborn specimens were processed to the fixation stage and stored in a refrigerator. Of the 224 cultures, 95 had a poor frequency of mitotic cells, 54 were fair and 75 were good. In practice, the fair and good cultures could be utilized for

	MITOTIC INDEX			
	MIN.	AVE.	MAX.	
NEWBORNS / TRAYS	-	6.3%	-	
ADULTS / TRAYS	0.6%	6.4%	9.8%	
ADULTS / TUBES	1.0%	4.8%	6.1%	
	POOR	FAIR	GOOD	TOTAL
DIVISIONS*	95	54	74	224
SPREADING**	75	53	34	162

* POOR: 1 DIV. PER 3 FIELDS AT 16X
FAIR: 1 DIV. PER FIELD AT 16X
GOOD: 2 DIV. PER FIELD AT 16X

** POOR: 1%WITHOUT OVERLAPS
FAIR: 2%WITHOUT OVERLAPS
GOOD: 5%WITHOUT OVERLAPS

Figure 8-1. Specimen preparation unit performance

G-banding analyses and most of the poor could be used for a 3 cell count and one karyotype with homogeneous staining.

Mitotic indices were obtained from 14 patient specimens obtained from Bio-Science Laboratories. The cultures were set up in parallel using tubes and culture trays. In the trays a range of 0.6 to 9.8% (mean 6.4%) and in the tubes a range of 1 to 6.1% (mean 4.8%) were obtained (Fig. 8-1).

During the period of this contract, it was possible to establish that most of the variability in mitotic frequency could be attributed to four sources:

1) Operator error. Occasionally, the operator failed to add colcemid to some of the wells.
2) Variable patient response to PHA.
3) Contamination of the specimen at the source, especially cord bloods.
4) Age and condition of specimens, especially those obtained by mail.

C. IMAGE DIGITIZER

1. Light Transfer

The relationship between light input and digital output for all picture points is the light transfer characteristic. The digital output (DN) vs optical density is of particular interest since optical density measurements are required for chromosome analysis. The light transfer parameter involves essentially all system components and as such is the first of the key performance measures. Signal-to-noise ratio is closely related to the light transfer characteristic since system noise is a major factor which limits the accuracy of optical density measurements. The major noise sources are the image tube and its preamplifier. Because of the non-linear signal processing (log amplifier) which follows the preamplifier, the system noise is not constant, but depends upon optical density. The RMS noise is taken to be the standard deviation calculated from the histogram of the digitized gray level values.

For measurement of the signal-to-noise ratio (SNR), the peak-to-peak signal is taken as the difference in DN (average) between the minimum and maximum densities to which the system gains and offsets are adjusted (usually 0.0 to 1.0 density).

Tests were performed to measure the system light-transfer characteristics including performance of the video signal processing electronics, optical density to DN transfer, shading (variation of light transfer over the available scan area), and signal-to-noise ratio. The tests are outlined below:

1) Electrical Flat Fields — 50 × 50 pixels using a test signal to simulate the TV camera output. This is to measure the performance of the electronics; gain, linearity, A-D conversion, noise, etc.
2) Optical Density Transfer — 50 × 50 pixels in the center of the frame with the video calibrated for 0.0 to 1.0 density giving 0 to 255DN. One frame is taken for each neutral density (ND) filter available from 0.0 to 1.0 density (approx. 0.1 density steps). A plot of density vs average DN gives the transfer function. The standard deviation of the histogram is taken as the RMS noise of the system. Tests were run with the image digitizer in both LOG and LINEAR modes.
3) Shading — Full frame pictures with video calibrated as for B above using a ND filter of 0.5 density. The average DN over each of 9 areas 50 pixels square is used to measure shading. The areas are three areas in each of three rows near the top, middle and bottom of the available picture.

Results of the light-transfer tests are summarized in Figs. 8-2 through 8-5. The electrical flat fields, depicted in Fig. 8-2, show that the noise and linearity of the system through the analog-to-digital converter (ADC) are adequate for a 7-bit (128 level) quantizing accuracy. The standard deviation (STD. DEV.) is an indication of both electronic and quantizing noise and depends on how close the input voltage is to the quantizing level (± 1/2 least significant bit). Only the maximum std. dev. is shown on the figure.

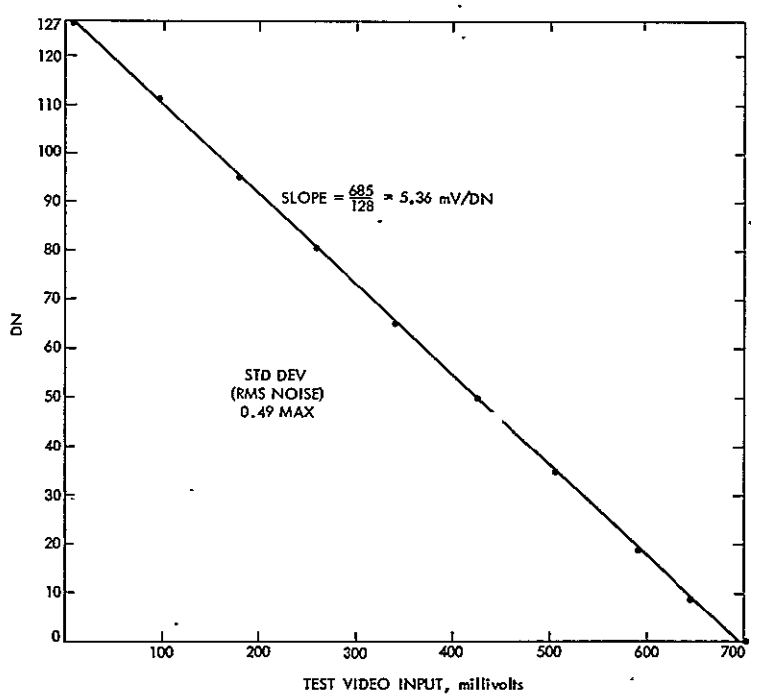

Figure 8-2. Image digitizer electrical flat fields

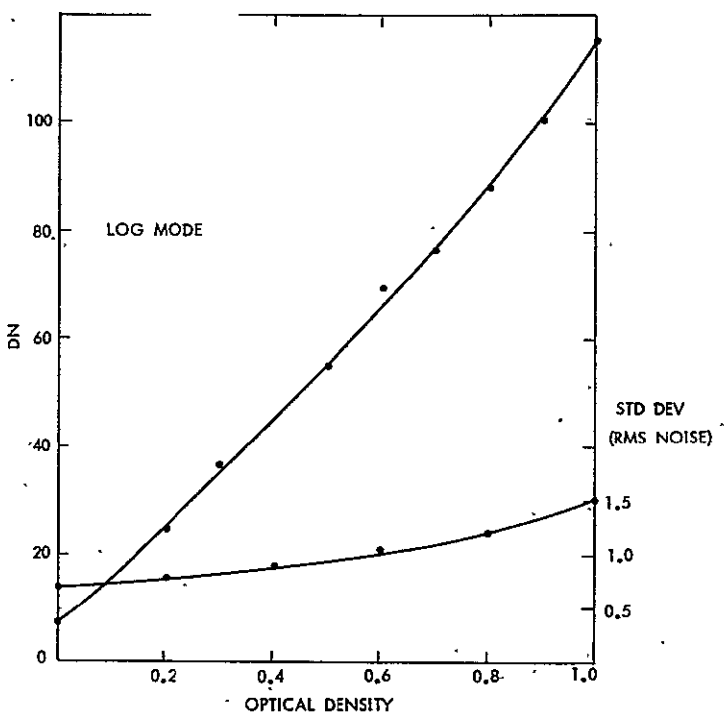

Figure 8-3. Image digitizer optical density transfer characteristic

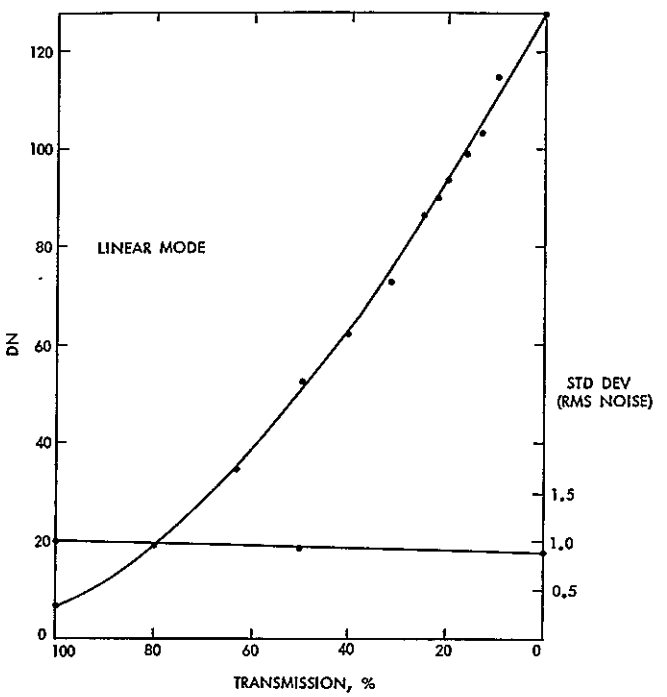

Figure 8-4. Image digitizer light transfer characteristic

LOG MODE (AT 0.5 OPTICAL DENSITY)

$\Delta DN = 105\ \Delta OD$

54.13	52.15	54.51
57.03	53.44	55.12
57.75	54.68	55.02

$\Delta DN_{max} = 57.03 - 52.15 = 4.88 \Longrightarrow \sim 0.046\ \Delta OD$

2. LINEAR MODE (AT 0.5 TRANSMISSION)

$\Delta DN \approx 120\ \ T$

47.79	47.58	53.24
48.87	46.17	51.57
49.16	47.08	49.82

$DN_{max} = 53.24 - 47.08 = 6.16 \Longrightarrow \sim 0.051\ \Delta T$

Figure 8-5. Image digitizer shading characteristics

Figure 8-3 gives the optical density transfer of the system in the LOG mode. The signal-to-noise ratio (peak-to-peak signal to RMS noise) is about 150 (43 dB) at an optical density of 0.0 and 72 (37 dB) at an optical density of 1.0.

Figure 8-4 gives the LINEAR mode light transfer. The curve is not linear with optical transmission because of the non-linear transfer curve of the vidicon TV camera image tube. More details may be found in the Spatial Data Systems manual for the Model 108 Picture Digitizer.

Figure 8-5 shows the results obtained from shading tests in both LINEAR and LOG modes. First a local slope at 0.5 transmission was obtained from the transfer characteristics (Figs. 8-3 and 8-4). The 3 × 3 matrix of numbers is the average DN value for each of the nine 50 × 50 areas. The maximum difference in DN is converted to a density and transmission change (ΔIOD and ΔT). In LOG mode shading corresponds to about 0.05 density units at 0.5 density. Similarly, in LINEAR mode shading is about 0.05 transmission at a transmission of 0.5. In both cases, this is about 5% of the total range, and includes microscope (illuminator and optics), TV camera, and Digitizer.

2. Magnification and Scan Geometry

This is measurement of overall magnification, and scan linearities. It is a function of the microscope optics (specimen to image plane), TV camera, and Image Digitizer (Spatial Data 108) electronics which samples the TV camera output. An object of known dimensions such as a calibrated stag micrometer slide can be scanned to determine overall magnification. To determine system linearity, repetitive measurements of the apparent length of a particular segment are made over the entire horizontal or vertical scan area. The segment should occupy the same number of pixels over the entire area.

Overall magnification was determined with the use of a calibrated stage micrometer measuring a length equal to about 80% of the field of view. The TV camera sweep non-linearities were measured with the aid of a special TV camera test set and a joystick-controlled cursor. This allowed the digital X-Y locations to be compared with known locations within the test image. Finally a length measurement error was determined for a 10 micron segment of the stage micrometer moved across the field of view horizontally and then vertically. The error is the maximum pixel count difference divided by the average pixel count for the 10 micron segment.

The results of these tests are summarized in Fig. 8-6. The aspect ratio is slightly less than one (approx. 0.97 with the 40X objective). This is about as close as can be easily set up with the TV camera sweep size controls.

The TV sweep linearity was measured with the aid of a special TV camera test set called an Optoliner (mfgr., Photo Research) with a Ball Char test slide having a series of black dots arranged in rows and columns. The digital X-Y locations of the dots were determined using the Spatial Data System joystick controlled cursor option (Borrowed from mfgr.). The observed digital X-Y locations were within 1.5% of the true locations on the test chart over the entire TV raster (Spec. 2%).

The length measurement error as previously described is listed. The number of pixels for 10 microns varies from about 25 at 40X to over 60 at 100X. A one pixel uncertainty in the operator's positioning of the cursor is thus about 4% at 40X and 1.7% at 100X. This error must be considered in evaluating the results of the length measurement error. Largest errors, as expected, are in the TV vertical scan direction and are at lower magnification. A 1% TV non-linearity is about 5 pixels or 20% of 10 microns at 40X. It is doubtful that the full 5 pixel error could occur within 25 pixels, but even a 2 pixel error would be an 8% error in the 10 micron measurement at 40X. At 100X a 2 pixel error would cause about 3.4% error in measuring 10 microns. Thus, the length measurement error is consistent with the observed TV camera sweep linearity and the specification.

MAGNIFICATION

OBJECTIVE IN USE	MAG'N CHANGER POSITION	HORIZONTAL pixels/micron (TV VERTICAL)	VERTICAL pixels/micron (TV HORIZ SWEEP)
40X	0.8	2.45	2.54
63X	0.8	3.83	3.97
63X	1.0	4.87	5.00
63X	1.2	5.60	5.00
100X	0.8	6.10	5.41

SCAN GEOMETRY

A. TV CAMERA SWEEP LINEARITY

APPROX 1.5% (ENTIRE FIELD), SPEC - ±2%

B. LENGTH MEASUREMENT ERROR

$$\Delta = \frac{\text{MAX COUNT DIFFERENCE}}{\text{AVG COUNT FOR 10}}$$

OBJECTIVE IN USE	MAG'N CHANGER POSITION	NUMBER OF POSITIONS	Δ (X) (TV VERT)	Δ (Y) (TV HORIZ)
40X	0.8	15	11.8%	4.1%
63X	0.8	10	10.1%	2.6%
63X	1.0	8	8.0%	4.1%
63X	1.2	6	8.3%	1.7%
100X	0.8	5	3.1%	3.3%

Figure 8-6. Magnification and scan geometry

3. Resolution

The major problem in measuring the resolution of the system is the availability of suitable test images, particularly for use with high power (e.g., 100X) objectives. It is desirable to be able to measure MTF's beyond 2000 cycles/mm spatial frequency. A high resolution square wave test target with spatial frequencies to 1000 cycles/mm (mfg. Ealing Corp.) can be used to obtain square wave response from which the MTF can be calculated. This is satisfactory for lower power objectives; at 100X, however, higher resolution test images are required, but to our knowledge are unavailable.

The Ealing High Resolution Test Chart was used for all resolution tests. A detailed description of the test image is found in Fig. 8-8.

Test pictures using the full frame scan area were taken. Objective lenses from 40X to 100X were used. Limiting resolution, based on the square wave target, was determined from the test pictures. The square wave response was quantatively determined from single line scans through the different spatial frequencies.

Additionally, square-wave response of a test frequency giving about 60% response in the center of the field of view was measured in the 4 corners to determine the variation of MTF over the full frame scan area.

Figure 8-7 shows the results of resolution tests using the Ealing high resolution test target (Fig. 8-8) with various objectives. In each case the magnification changer was in the 0.8X position. Per cent square wave response is plotted against the spatial frequency of the target. A maximum loss of 10% of the center square wave response was obtained in the extreme corners using the 631 cycle/mm test frequency with the 100X objective.

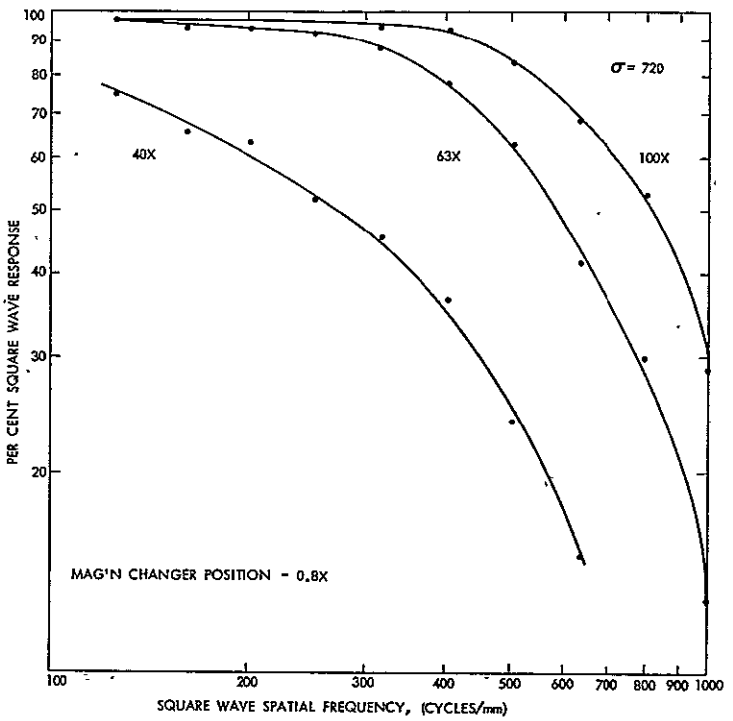

Figure 8-7. Image digitizer resolution

4.. Mechanical Stability

A knife-edge image was sampled continuously at the mid-point of the black to white transition to provide a measure of mechanical stability. Movement which causes a displacement of the image equal to one-half the diameter of the scanning beam (about 30 microns) causes the output video to go from half scale to zero or full scale. Less image displacement causes a correspondingly smaller change in the video output. The displacement can be calculated from the change in video output by its direct relationship to the change in area of the scanning beam obscured by the knife edge. This, in turn, is related to the linear displacement of the image. Tests were performed with the knife edge oriented both horizontally and vertically.

A listing of 9000 samples continuously obtained at the same X-Y location at the 30 per second TV frame rate showed a standard deviation of about 11. These samples were all taken at the midpoint of the black to white

EALING-D.L. HIGH RESOLUTION TEST TARGETS

- **Spatial frequencies from 1 to 1000 cycles/mm**
- **Fifteen bar, high contrast**
- **Maximum variation in width between light and dark bars is less than 5% over the 1 to 300 cycles/mm range**
- **Gives direct indication of limit of sine wave response**
- **Designed and manufactured by Diffraction Limited, Inc.**

Three groups of fifteen-bar high contrast test targets covering an area 16mm x 16mm are centered on a 0.060 inch thick glass plate. Each of the three groups has 11 targets with the smallest target repeated in the next smallest group for a total of 31 distinct target sizes. The spatial frequency ratio between successive targets is $\sqrt[10]{10}$.

The spatial frequencies in cycles per millimeter in each group of targets are:

Group 1	*Group 2*	*Group 3*
1.00	10.00	100.0
1.26	12.59	125.9
1.58	15.85	158.5
2.00	19.96	199.6
2.51	25.12	251.2
3.16	31.63	316.3
3.98	39.82	398.2
5.01	50.14	501.4
6.31	63.13	631.3
7.95	79.48	794.8
10.00	100.00	1000.0

The density difference is greater than 2.0. The maximum variation in width between light and dark bars is less than 5% over the 1 to 300 cycles/mm range.

The fifteen-bar target may be used exactly as a three-bar target. It has the additional advantage that this target, unlike three-bar targets, gives a direct indication of the limit of the sine wave response of the lens-film system under test; that is, the spatial frequency cut-off point is the target of highest frequency just resolved.

The test targets are available centered on either a square or round plate.

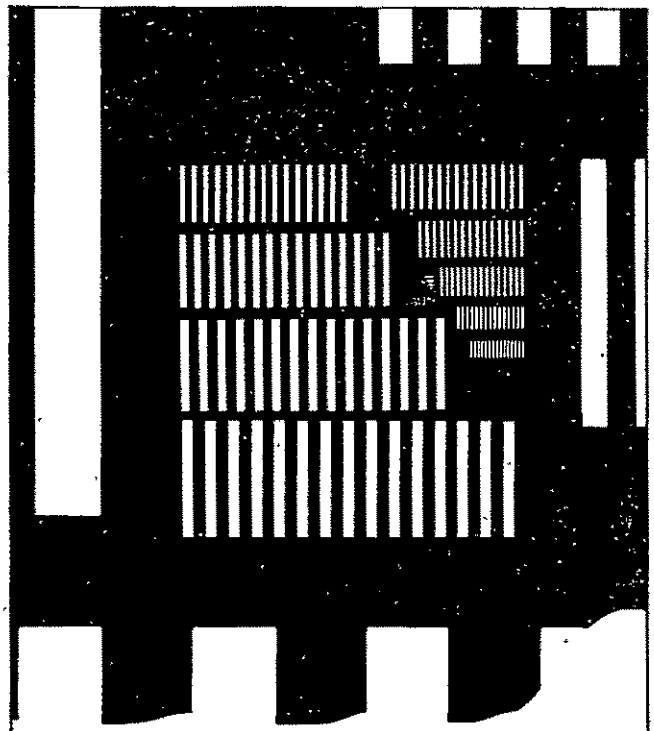

X30 enlargement of the central area of the target Note the precise replication of the target format in each of the three groups

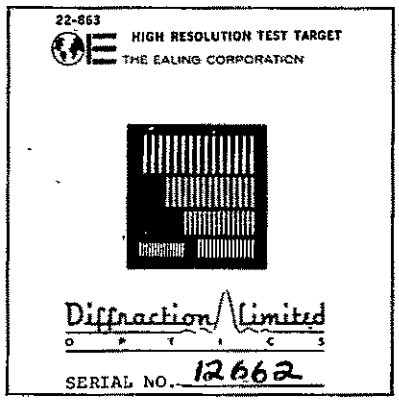

Actual size
6 mm x 16 mm target on 2 inch square plate

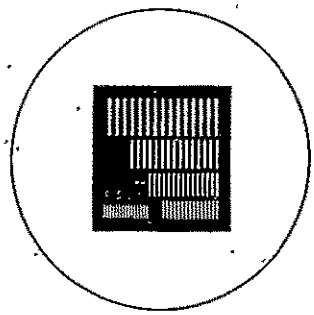

Actual Size
16 mm x 16 mm target on 40 mm diameter plate
(available on plates from 24 mm to 48 mm diameter)

Figure 8-8. Ealing-D.L. high resolution test targets

transition of the knife edge image using the 63X objective at a 0.8X magnification changer setting. From the LINEAR mode light-transfer curve (Fig. 8-4), the standard deviation corresponds to about 9% transmission. This further corresponds to about a 3 micron standard deviation in position of the knife edge in relation to the sampled scanning beam. The area of the spot which is blocked off by the knife edge is related to the position of the knife edge, and the blocked area appears as an optical transmission level in the digitized output. Assuming the standard deviation in knife edge position is due entirely to mechanical instability and jitter and that peak-to-peak value is 5 times the RMS, the movement at the image plane (microscope slide) is about 0.2 microns peak-to-peak.

5. Glare

Glare reduces contrast and makes measurement of the optical density of the specimen inaccurate because of "spillover" of unwanted light into darker areas. Measurement of the amount of glare can be made either from the apparent density of small opaque spot or from the apparent density profile measured along a line perpendicular to a sharp knife edge.

The amount of glare was measured using a knife-edge image. Initially average black and white levels are obtained with the illumination completely removed and the image removed, respectively. Then the vertical knife edge is scanned and a three line average taken. The average black level some distance beyond the knife edge white to black transition is determined and the difference between this level and the black level without illumination is taken to be a measure of the amount of glare.

Results of the glare test are shown in Fig. 8-9. As can be seen, the amount of light "spillover" into the area that should be black is about 2 DN. This corresponds to less than 2% of the black-white transition. The LINEAR mode was used for this test.

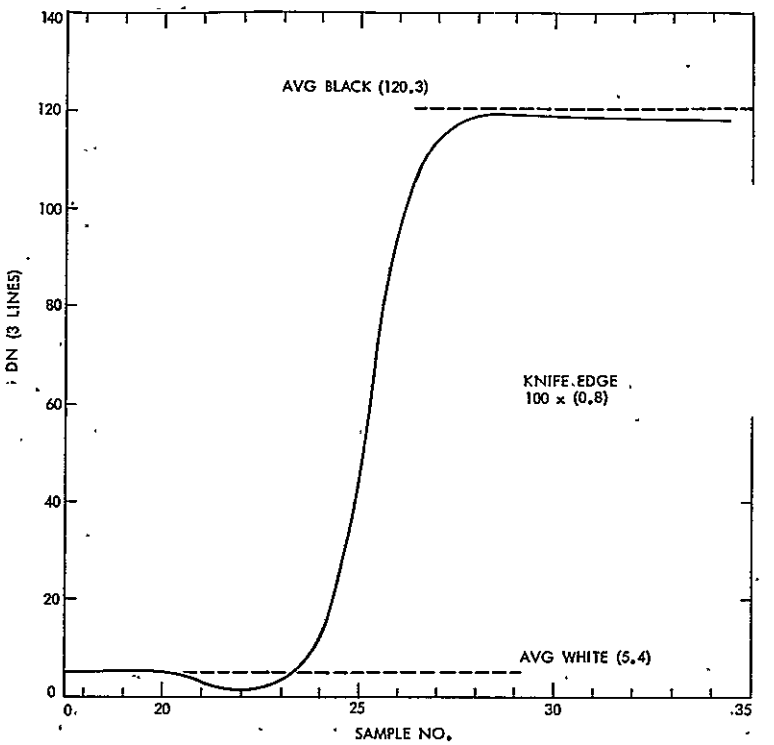

Figure 8-9. Image digitizer glare test

D. COMPUTER-CONTROLLED MICROSCOPE STAGE

For each of the three axes (x, y, and z or focus) step size, step rate, total travel, mechanical backlash and repeatability are the key performance measures. The repeatability associated with removing and reinserting a slide without moving the stage is needed to assess the ability of the system to return to a given slide location at a later time. Finally, the repeatability of the stage calibration which includes removing the slide and replacing it, stage motion, and recalibration (move into the limits) is required.

Most measurements required are simple to make with the aid of the calibrated stage micrometer test slide and oscilloscope. Therefore, a detailed test plan is not given here. Backlash was determined with moves greater than 10 steps before changing direction.

A performance summary appears in Fig. 8-10. Stage calibration repeatability was derived from an estimate of the characteristics of the microswitches used in limiting stage travel. These switches are also utilized in calibrating the stage.

E. SPREAD DETECTOR/AUTOFOCUS UNIT

There are four key measures of operational performance: search rate, garbage rate, miss rate and time to focus. Spread detection performance may be measured by determining the area and threshold counts for spreads, nuclei and background in relation to the acceptance limits chosen. Focus performance is given by the plot of focus parameter versus Z-axis position.

Operational performance is based on past experience with slides of typical quality since numbers are very slide dependent. A sample of 20 spreads, 10 nuclei, and 10 background areas was used in obtaining spread

DIRECTION (AXIS)	X AND Y	Z (FOCUS)
STEP RATE (steps/sec)	250	250
STEP SIZE (microns)	10	0.1
TOTAL TRAVEL (APPROX)	50 mm	3 mm
MECHANICAL BACKLASH (microns)	±2.5	±0.5
REPEATABILITY (microns)		
A. STAGE	±2.5	
B. SLIDE HOLDER	±10	
C. STAGE CALIBRATION	±25	

Figure 8-10. Stage performance summary

detection performance data, focus performance data was obtained from a single typical spread. A test program was written to obtain count, high frequency (HF) and integrated optical density (IOD) parameters. It takes 100 parameter values and prints out minimum, maximum, and mean values. Area readings were obtained from the meter on the operator control panel.

Operational performance experience is summarized in Fig. 8-11. In Fig. 8-12 the mean value and range are shown for spreads, nuclei and background for both count and area parameters. Only the lower limit appears because the upper limit is above full scale. Figure 8-13 shows the curve of focus parameter values (HF and IOD) versus Z-axis position.

F. KARYOTYPING PERFORMANCE

Several tests were conducted to determine the overall performance of the system in operation. Of particular interest is the time per cell analyzed and the accuracy of the karyotypes produced. Performance is extremely specimen quality dependant and these tests were performed on good quality spreads.

1. Timing

Figure 8-14 shows a summary of the factors which contribute to the overall timing of cell analysis. In general, banded cells require about twice the time of homogeneously stained cells. This is because more cuts are required to separate the chromosomes and the cuts must be made more carefully, pairing requires more correction than grouping, and program execution time is somewhat longer. A major factor is the amount of "miscellaneous" time required. This includes excess (non-overlapped) search time, reexamining the cell through the eyepieces to resolve doubts, redisplay of partially corrected karyotypes, and considerable study of the displays.

These performance figures represent a baseline from which to seek improvement. As specimen quality improves, so will performance. Since

A. SEARCH RATE

$$\text{TIME PER MOVE} = \frac{13 \text{ steps}}{250 \text{ steps/sec}} + 0.15 \text{ sec (WAIT TIME)}$$

$$= 0.2 \text{ sec}$$

$$\text{AREA PER MOVE} = 130 \times 130 \text{ microns}^2 = 0.0169 \text{ mm}^2$$

$$\text{SEARCH RATE} = \frac{\text{AREA}}{\text{TIME}} = \underline{\underline{0.083 \text{ mm}^2/\text{sec}}}$$

B. GARBAGE RATE

$$\frac{\text{FALSE POSITIVES}}{\text{TOTAL SPREAD PRESENCE INDICATIONS}} \approx \underline{\underline{15 - 20\%}} \text{ TYPICAL}$$

C. MISS RATE

$$\frac{\text{SPREADS UNDETECTED}}{\text{TOTAL SPREADS}} \approx \underline{\underline{5 - 10\%}} \text{ TYPICA}$$

D. FOCUS TIME

$\underline{\underline{1 - 2 \text{ sec}}}$ TYPICAL

Figure 8-11. Spread detection and focus operational performance summary

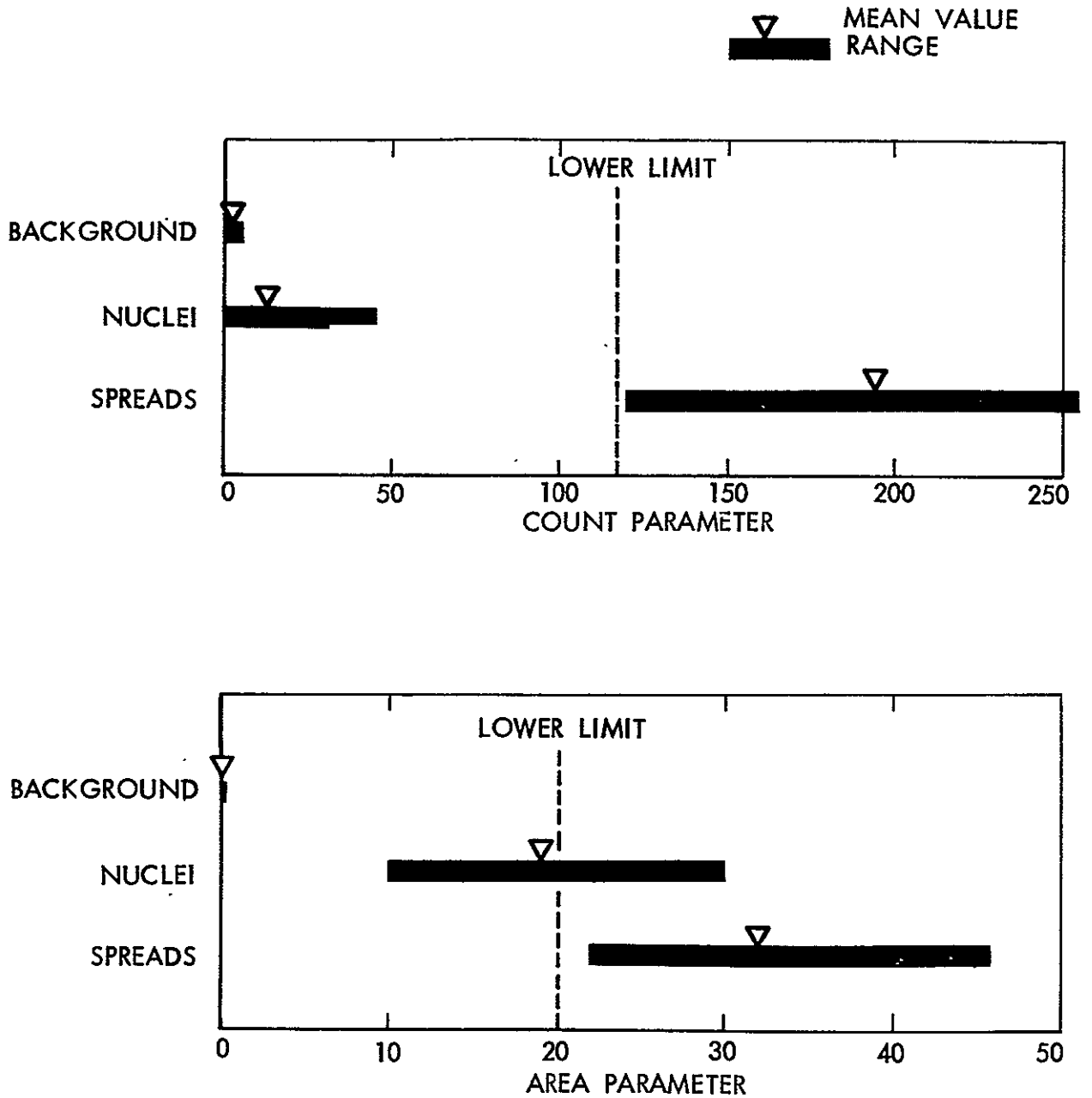

NOTE: ABOVE DATA ARE BASED ON A SAMPLE OF 20 SPREADS, 10 NUCLEI, AND 10 BACKGROUNDS

Figure 8-12. Spread detection performance

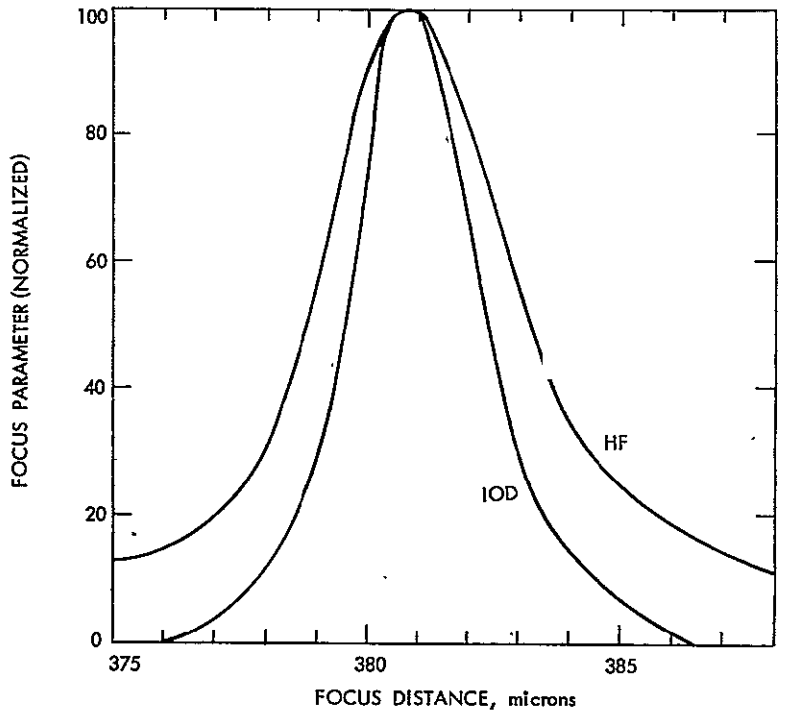

NOTE: ABOVE DATA ARE TAKEN WITH A SINGLE SPREAD IN THE FIELD OF VIEW

Figure 8-13. Focus performance

	HOMOGENEOUS	FOURIER	HYBRID
CUTS REQUIRED	0-4.3-12*	2-14-31*	2-14-31*
TIME PER CUT	9 sec	14 sec	14 sec
MEASUREMENT ERRORS		5-9-11*	5-9-11*
INTERGROUP MOVES	3-8-19*	2-5.5-11*	0-8-12*
INTRAGROUP MOVES			1-2.5-5*
TIME PER MOVE (AVG)	10 sec	19 sec	19 sec
TOTAL EXECUTION TIME	121 sec	181 sec	140 sec
MISCELLANEOUS TIME	≈3 min	≈6 min	≈6 min
TIME PER KARYOTYPE	3.5-7-15* min	8-16-35*	8-17-35*
TIME PER COUNT	90 sec	≈90 sec	≈90 sec

*MIN-AVE.-MAX

Figure 8-14. Summary of factors contributing to overall timing of cell analysis

execution times represent a small part of the total, considerable time is spent by the operator making decisions. Better display quality would significantly reduce this.

2. Banded Classifier Performance

Figures 8-15 and 8-16 are confusion matrices showing the accuracy of the Fourier and Hybrid classifiers for banded chromosomes. Since one "move" can actually interchange two chromosomes, in many cases two "errors" may be corrected by one "move." Thus, the number of moves required to correct the karyotype is less than the number of errors. The hybrid classifier has a slightly lower error rate and shorter execution time. However, the additional step of correcting the grouping before running the hybrid classifier more than makes up for the difference as seen in Fig. 8-14.

3. Clinical Testing

The following tests were designed to establish the capabilities of the automated system on clinical material.

Aneuploidy Test. A blind parallel analysis of three-cell count included one karyotype involving 500 patient specimens from three sources. This test was designed to detect numerical abnormalities.

G-Banding Test. Analysis of 1000 umbilical-cord blood specimens from newborns at U.S.C. Medical Center used G-banding with 3 karyotypes per patient.

a. Protocols

For the Aneuploidy Test heparinized blood specimens were obtained in Vacutainer tubes from the following sources:

Bio-Science Laboratories. Specimens in Vacutainers sent by mail to Bio-Science Laboratories from various states were used to establish cultures

CLASSIFIED TYPE

ACTUAL TYPE	1	2	3	4	5	6	7	8	9	10	11	12	X	13	14	15	16	17	18	19	20	21	22	Y	TOTAL	ERROR	ERROR %
A 1	22																								22	0	0
A 2		22																							22	0	0
A 3			22																						22	0	0
B 4				16	6																				22	6	27
B 5				6	16																				22	6	27
C 6						21				1															22	1	5
C 7							19	1	2																22	3	14
C 8							1	20	1																22	2	9
C 9							2		19																21	2	10
C 10						1				18			1				1		1						22	4	19
C 11											21														21	0	0
C 12											1	20													21	1	5
X										1			10												11	1	9
D 13														22											22	0	0
D 14															19	1			2						22	3	14
D 15															1	20							1		22	2	9
E 16																	18		1	2	1				22	4	18
E 17																		22							22	0	0
E 18										1				1	1		1		16			1		1	22	6	27
F 19																	1			18	1		1	1	22	4	18
F 20																	1		1	1	19				22	3	14
G 21																						21	1		22	1	5
G 22																				1	1		17	2	21	4	19
Y															1				4				2	4	11	7	64
																								OVERALL	502	61	12

11 CELLS
502 CHROMOSOMES
61 ERRORS
42 MOVES REQUIRED

12%CLASSIFICATION ERROR RATE
5.5 ERRORS PER CELL
3.8 MOVES PER CELL

Figure 8-15. Fourier classifier performance

HYBRID CLASSIFIED TYPE

ACTUAL TYPE	1	2	3	4	5	6	7	8	9	10	11	12	X	13	14	15	16	17	18	19	20	21	22	Y	TOTAL	ERROR	ERROR %
A 1	22																								22	0	0
A 2		22																							22	0	0
A 3			22																						22	0	0
B 4				19	3																				22	3	14
B 5				3	19																				22	3	14
C 6						21				1															22	1	5
C 7							19	1	2																22	3	14
C 8							1	20	1																22	2	9
C 9							2		19																21	2	10
C 10						1				20			1												22	2	9
C 11											21														21	0	0
C 12											1	20													21	1	5
X										1			10												11	1	10
D 13														22											22	0	0
D 14															13	9									22	9	41
D 15															9	13									22	9	41
E 16																	22								22	0	0
E 17																		22							22	0	0
E 18																			22						22	0	0
F 19																				21	1				22	1	5
F 20																				1	21				22	1	5
G 21																						15	6		21	6	29
G 22																						7	15		22	7	32
Y																								11	11	0	0
																								OVERALL	502	51	10

11 CELLS
502 CHROMOSOMES
51 ERRORS
27 INTRAGROUP MOVES REQ.

4.6 ERRORS PER CELL
2.5 MOVES PER CELL
10%CLASSIF. ERROR RATE

Figure 8-16. Hybrid classifier performance

in their laboratory using manual procedures with test tubes and Pasteur pipettes. On the same day or the next day, Bio-Science Laboratories sent the used specimens to us by messenger. The age of the specimens varied from one to five days.

The specimens sent to our laboratory were processed with the semi-automated preparation system using the procedure described earlier. Slides were stained homogeneously with Giemsa stain and sent to JPL for analysis.

Children's Hospital of Los Angeles. Specimens were received by mail from the Genetics Laboratory after cultures had been established there. They were processed in the same way as the Bio-Science specimens. The specimens were obtained from patients in the Division of Mental Retardation and from the Pediatric wards of the hospital.

Loma Linda University Hospital. Fifteen specimens were received by mail from Loma Linda in Vacutainer tubes and were processed as above. The source of the specimens were patients referred to the Genetics Department by physicians in the area.

For the G-Banding Test, cord blood specimens from U.S.C. Medical Center were processed through various stages of the system. Many of these specimens and those from Bio-Science Laboratories were used in testing the components of the system and were not carried through for analysis.

The specimens were obtained from Dr. Darlene Powars of the Hematology Department. She is conducting a survey of newborns for hemoglobin abnormalities together with Dr. Walter Schroeder of the California Institute of Technology. The specimens were collected in 6 ml tubes containing EDTA as an anti-coagulant. They were collected by nurses on a 24 hour basis and were stored in a refrigerator until processed. The elapsed time between collection and culture was generally between 6 and 48 hours.

The procedure for setting up cultures was designed to obtain a maximum number of viable specimens with a minimum amount of travel and inconvenience

to the U.S.C. staff. A laminar flow hood and a stock of culture supplies were placed in the U.S.C. Hematology Lab. Our technician visited the laboratory 3 times a week to set up cultures. They were capped and taken to City of Hope for incubation. The procedure for establishing cultures was the same as that described in Section VIII.B.4.

b. Results

The sources and total number of specimens received for testing the system are shown on page 8-1. A total of 3,679 specimens were used in testing the specimen preparation system and about 600 of those were used in testing the automated light microscope.

Aneuploidy Test. In the analysis of slides at JPL, one karyotype and two counted metaphase spread images were produced with a patient report listing the patient's identification number, culture number, date and time of analysis, source of specimen and cytogenetic results. The results on the print-out were compared with the results at Bio-Science Laboratory and a record of agreements and disagreements were made. Where the results disagreed, karyotypes from both sources were compared to determine the kinds of errors made. Figure 8-17 shows the results of these comparisons.

From a total of 318 patient analyses, 261 (82.1%) agreed with the Bio-Science manual analysis. There were 5 (1.6%) false normals which were interpreted as abnormal by Bio-Science but after reviewing both sets of karyotypes it was determined that errors were made by our operator.

A total of 8 (2.5%) false abnormals were encountered in which the system produced an abnormal count on normal patients.

There were 22 (6.9%) sex errors in which a male karyotype was mistakenly arranged as a female or vice-versa.

In 18 (5.7%) other cases, an error in patient identification is the most reasonable explanation of the disagreement.

TOTAL PATIENTS	318	100%
AGREEMENTS WITH BSL	261	82.1%
FALSE NORMALS	5	1.6%
FALSE ABNORMALS	8	2.5%
SEX ERRORS	22	6.9%
OTHER MIS-KARYOTYPED	7	2.2%
PROBABLE ID ERRORS	18	5.7%

Figure 8-17. Results of parallel karyotyping test

A miscellaneous group of 7 (2.2%) accounted for the remaining disagreements. These were cases where the operator misplaced a chromosome without changing the diagnosis from normal to abnormal or vice versa. An example is mistaking 47XXY for 47XXG+.

G-Banding Test. Unfortunately, we have been unable to complete this important test of karyotyping performance. Rewriting our research-based Fourier classifier for banded chromosomes for the PDP11/40 and subsequent debugging proved to require considerably more time and manpower than originally planned. Thus the Fourier classifier only became operational late in the contract. Initially its performance was poor, which prompted us to investigate the hybrid classifier for possible improvement, but at the expense of the G-Banding study. Furthermore, it was only late in the contract that the banded specimen quality began to stabilize at acceptable levels. For these reasons we have been able to process only twenty patients (sixty cells) of this study at this time. However, work is continuing and partial results may yet be obtained.

Discussion

The overall disagreement rate was 18.2% in a strictly blind 3-cell analysis for aneuploidy. No information other than a patient I.D. number was provided to the operator. Although this figure appears high it represents an extremely pessimistic test procedure designed to pinpoint all weak points in the operation. For example, if clinical sex information had been available, the 22 sex errors would have disappeared. In Fig. 8-17 we compared the operator's results with that of Bio-Science. Many of the errors were visible on the karyotype and would have been caught during interpretation by a cytogeneticist.

The identification error rate of 5.1% appears unusually high. Part of this can be attributed to the fact that patient identification was transferred through 3 laboratories whereas normally only one lab would be involved. Our procedure involved (1) obtaining the specimen with Patient ID, (2) keeping track of the culture tray and well, (3) perperly marking the slide, (4) correctly entering the Patient ID into the computer, and (5) retrieving accurate diagnostic data from Bio-Science Laboratories' file. Our record-keeping system proved not to be rigid enough to prevent mixups. More rigorous procedures could reduce this error rate.

The false normals and abnormals were due to chromosomes being lost or found and leading to an inaccurate diagnosis. Most of these are due to selection of broken cells by the operator. In two cases, a chromosome was deleted by a program bug which has since been fixed. In one case a "blob" masqueraded as an extra G chromosome.

Almost universally all errors except ID mixups involved poor quality cells. In many cases, the operator either selected a poor cell or no good ones were available on the slide. Almost always they were "short" (highly contracted) cells showing poor morphology definition. Frequently, they were scanned in less than sharp focus. Better cell selection criteria and improved operator training should reduce the error rate significantly.

This test points out that most of the errors could be prevented by modifications of the operating procedure rather than by hardware and software changes. One notable exception is display quality in which an improvement would greatly assist the operator's decisions (See discussion in Section IX).

4. Replication Study

A replication study was conducted to assess the variability of chromosome measurements extracted by the system. Figure 8-18 summarizes the results. One cell was repeatedly scanned and karyotyped ten times. The mean, standard deviation, and normalized standard deviation (SD ÷ Mean) for one chromosome in each group are shown in Fig. 8-18. Means and standard deviations for size measurements are all expressed as a percentage of the sum of such measurements for the total cell. In the B, D, F and G groups, where the chromosomes are almost identical, measurements were averaged over half the chromosomes in the group.

Replication variance is due primarily to video noise and variations in image sharpness (focus). Replication variance affects the classifier slightly For example, repeated scanning of a very good homogeneous cell produces some perfect karyotypes and some with one or two misgroupings due to measurement variance. Thus camera noise and improper focusing detract slightly from system accuracy. Measurement accuracy is slightly lower than our large research-based system.

GROUP

MEASUREMENT		A-1	A-2	A-3	B	C	D	E-16	F	G
LENGTH	MEAN	4.30	4.08	3.01	2.88	2.22	1.71	1.53	1.22	1.02
	S.D.	0.044	0.035	0.049	0.041	0.023	0.045	0.054	0.063	0.037
	N.S.D. %	1.0	0.8	1.6	1.4	1.0	2.7	3.5	5.2	3.6
AREA	MEAN	4.40	4.55	3.14	3.09	2.40	1.57	1.43	1.03	0.81
	S.D.	0.112	0.044	0.082	0.051	0.041	0.054	0.059	0.064	0.041
	N.S.D. %	2.5	1.0	2.6	1.7	1.7	3.5	4.1	6.3	5.1
IOD	MEAN	4.43	4.67	3.21	3.20	2.40	1.62	1.29	0.99	0.74
	S.D.	0.089	0.050	0.072	0.112	0.048	0.042	0.047	0.039	0.033
	N.S.D. %	2.0	1.1	2.2	3.5	2.0	2.5	3.7	3.9	4.6
CIL	MEAN	0.52	0.61	0.54	0.72	0.56	0.81	0.58	0.56	0.80
	S.D.	0.008	0.007	0.019	0.021	0.019	0.031	0.022	0.047	0.021
	N.S.D. %	1.6	1.2	3.5	2.9	3.4	3.9	3.7	8.3	2.5
CIA	MEAN	0.53	0.61	0.54	0.74	0.57	0.89	0.59	0.56	0.90
	S.D.	0.012	0.009	0.016	0.017	0.021	0.031	0.020	0.051	0.018
	N.S.D. %	2.2	1.4	3.0	2.3	3.6	3.5	3.3	9.3	2.0
CID	MEAN	0.54	0.63	0.57	0.76	0.61	0.93	0.67	0.57	0.95
	S.D.	0.013	0.006	0.012	0.015	0.020	0.027	0.020	0.051	0.011
	N.S.D. %	2.5	1.0	2.1	2.0	3.4	2.9	3.0	9.0	1.2

Figure 8-18. Replication study

SECTION IX

CONCLUSION

A. GENERAL

This contract program has produced a compact, self-contained prototype automated karyotyping system. Current hardware and software technology has been packaged for application to clinical and research cytogenetics. This relatively inexpensive system ($127, 000 hardware cost in 1973) forms a test bed upon which to evaluate the usefulness of 1973 levels of technology in the clinical and research environments. Tests which have been conducted on the system establish a performance baseline which may be used to assess the applicability of current technology and point out fruitful directions of further development.

Our subjective impressions after several months of operating experience include the following. The entire system generally operates smoothly and efficiently without serious production bottlenecks. Cytotechnicians are readily trained to operate the system, although some seem quicker than others to develop the ability to use the system at highest production efficiency. A special talent is required to make most effective use of the system's overlapping capability. Operation of the unit is flexible enough that the operator seldom finds it inconvenient to do any karyotyping related task. Operator fatigue and boredom have not proven to be problems, although minor rearrangement of the equipment configuration could possibly improve efficiency.

The software developed for this system represents a major accomplishment. The supervisor program allows overlapping in time of three tasks to provide simultaneous slide search, karyotyping, and output image generation. This package should prove adaptable to and useful in a variety of similar applications.

B. SYSTEM COST

The hardware procurement costs for the system are itemized in Table 9-1. These represent our cost, in 1973, of equipment and supplies needed to build the system. Not included are manpower costs for assembly of the

special purpose hardware or for software development. Since substitutions and deletions would undoubtedly accompany any duplication of the system, Table 9-1 is supplied only as a guide to estimate the current cost of replication.

Table 9-1. Hardware costs

Item	Cost
Computer	$ 40.22K
Peripheral Equipment	34.53K
Microscope and Stage	16.35K
Image Digitizer	14.66K
Spread Detector/Artofocus	1.80K
Interactive Display	7.15K
Hardcopy Pictorial Output Device	10.70K
Miscellaneous	1.00K
K = 1000	$126.41K

C. FURTHER WORK

While the basic accuracy of the system is about as expected, the time required per karyotype is somewhat above our initial goals, particularly with banded specimens (Recall Figure 8-14, page 8-23). The reasons for this are now apparent and significant improvements are within reach. Since a major part of the time required to produce karyotypes is spent in the interactive phase of analysis, significant improvement in performance can be gained by reducing the operator's time per cell. The factors which limit karyotyping speed and their remedies are discussed in the following paragraphs.

1. Specimen Quality

Specimen quality has the strongest single influence on production efficiency. Specimen quality requirements are more strict than with the manual technique. A slide contaminated with cellular debris, for example, poses little problem

for the human metaphase finder but can render the automated slide search almost totally ineffective since it will get spread presence indications in almost every field. Inadequate chromosome spreading drastically increases the interactive time required to get proper chromosome isolation. This problem is accentuated with Trypsinized chromosomes because of swelling and the necessity to select longer cells to obtain good banding. Inconsistency in the banding technique makes rare the cell which is simultaneously well spread, properly Trypsinized, evenly stained, and well banded. While we made considerable progress toward standardizing the preparation of homogeneously stained specimens, we were able to accumulate less experience with the more complex banded procedure. Further work along these lines is planned at the City of Hope, and it may be expected to produce significant results.

2. Display Quality

Display quality is another factor which limits production efficiency. The karyotyping process is defined at or near the resolution limit of the light microscope, particularly for banded cells. Thus any image degradation renders more difficult the decisions involved. It is clear from Figure 8-14 that program execution time is not the major time consuming factor. Operator decision time is considerably more significant.

In this system, the best image of a cell is obtained by looking directly into the microscope. The digitized image, when printed out on a high quality image recorder (see Figure 3-2), is almost as good. The live TV display is third in line being only slightly less sharp than the digitized image. The gray-scale display ranks fourth in quality and represents an appreciable degradation of the image in the eyepieces, particularly near the corners of the frame. This contributes to the operator's difficulty in resolving questions about proper chromosome placement. In our experience, the operator frequently finds it necessary to refer to the live TV display or look through the eyepieces to resolve questions. This means the spread must be held under the objective until the operator is confident he can complete the karyotype from the gray-scale display. This, of course, precludes early start of the next slide search sequence and undermines the effectiveness of overlapped operation.

The Hughes Model 639 scan conversion memory in the gray-scale display unit is prone to drift out of focus and out of cursor calibration. In view of its marginal performance at best and its tendency toward spontaneous degradation, we advocate substitution of more recently available digitally refreshed image display technology (i. e., a RAMTEK or an inexpensive digital disk display). This would eliminate frequent cursor calibration as well.

The remaining image display item is the hardcopy output device. At the time we requested price quotations, only ALDEN could offer a firm price and delivery date on a unit with acceptable specifications. Since that time several other units have become available. The quality of the ALDEN output was disappointing from the outset and repeated remedies were tried and failed. Figure 9-1 illustrates the output of the ALDEN recorder. Contrast this with Figure 3-2 produced on a precision CRT film recorder. In our experience, the ALDEN output is only marginally adequate for aneuploidy studies on homogeneously stained specimens and threatens to alienate the cytogeneticist doing banded work. We strongly recommend that the ALDEN unit be replaced with one of the recently available but superior units of comparable price in all future systems and in this system before further testing or application.

3. Slide Search

Search speed is another factor affecting production performance. Ideally, the automatic slide search would locate another good cell while the current one is being karyotyped. In our experience this was not a problem except on sparse slides. In such cases the operator has only a few cells to select from and the best of these may not be very good. Search performance could be improved by (1) moving the stage faster, (2) searching at lower power, and (3) using a more sophisticated spread detection circuit.

Stage speed is currently limited by the IMANCO stage which fails to meet its mechanical specification by a factor of four. Whereas the stage is advertised to move at 1000 steps per second (10 mm/sec), we encountered missed steps and loss of calibration above 250 steps per second. The mechanical settling time after stopping is 150 msec, considerably longer than anticipated. The manufacturer is presently working to correct these problems and when he does we can increase search speed to the limit implied by image retention on the vidicon target.

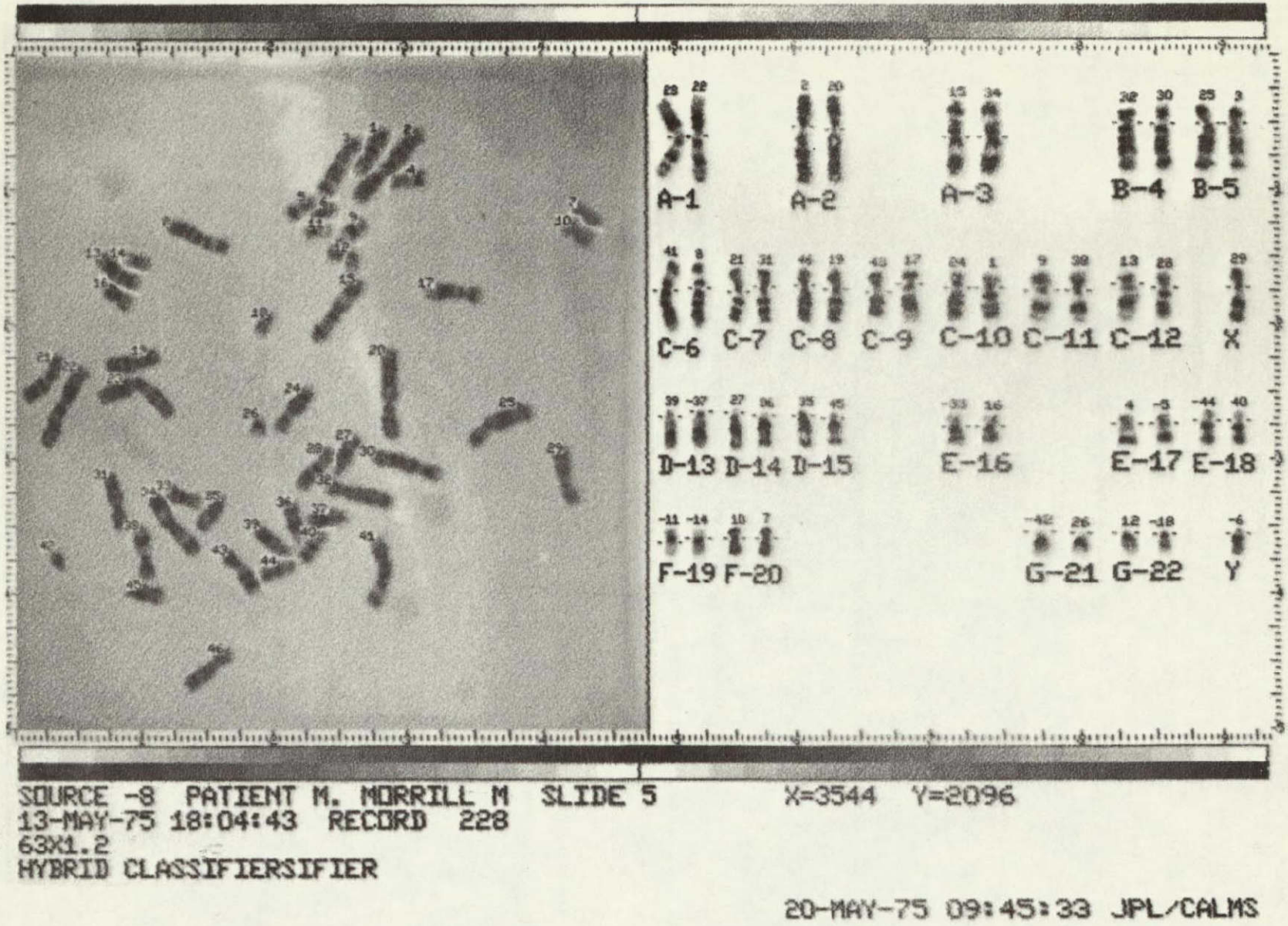

SOURCE -8 PATIENT M. MORRILL M SLIDE 5 X=3544 Y=2096
13-MAY-75 18:04:43 RECORD 228
63X1.2
HYBRID CLASSIFIERSIFIER

20-MAY-75 09:45:33 JPL/CALMS

Figure 9-1. Example of ALDEN output

REPRODUCIBILITY OF THE ORIGINAL PAGE IS POOR

We currently search under a 63X oil-immersion objective with the magnification turret set at 0.8X. Since scanning must be done at 100X oil, it is inconvenient to search with an air objective and change back and forth. One could use a lower power oil objective and increase the area searched per second. This could be coupled with a more sophisticated spread detection algorithm which could more effectively detect spreads surrounded by undivided cells in a low power field.

4. Software Development

Further software development would probably best be devoted to the banded classifier. Of the total algorithm development effort that has been devoted to automated chromosome analysis, a disproportionally small amount has been devoted to this important area (Ref. 9-12). This is true in part because the banded technique itself is relatively new. The Fourier classifier used in this system (Ref. 11) performs well on high quality specimens requiring only about 4 moves per cell (Recall Figure 8-15). However, it lacks one potentially useful characteristic. The measurements it produces (complex Fourier coefficients) are adequate for classification purposes but practically useless for human interpretation. Granlund at MIT (Ref. 12) and Wall at JPL have pursued the development of syntactical banded classifiers which treat the bands as individual entities. Each band is located, measured, and characterized by its position, width and intensity. A classifier based on these measurements promises improved performance since statistically reliable bands can be weighted more heavily in the classification process than unreliable bands. Such an algorithm resembles the human classification process more closely than the mathematically elegant Fourier classifier described in Section VII. D. 3. a. Thus, a syntactical banded classifier promises slightly improved performance and greatly enhanced utility of chromosome measurements.

Another area of possible algorithm improvement is in the location of centromeres on Trypsinized chromosomes. Swelling tends to mask the width constriction in many cases. One could deduce centromere position from the staining profile after classification but this would eliminate the second most important single measurement, centromeric index, from the classification

procedure. Centromere position is needed independently of the other measurements on banded chromosomes. Thus improved algorithms would enchance classifier performance.

5. Test and Evaluation

Finally, the logical next step is further clinical testing and evaluation of the entire system. Our operating experience uncovered many small hardware, software and operational problems, the correction of which steadily improved performance. Since we were doing software development and some hardware debugging right up to the end of the contract, we never really achieved a full-scale production mode in our test program. We feel that careful attention to human factors in operating procedure could gradually extract significant further improvements in production efficiency.

The system produced under this contract program represents a significant step toward moving automated chromosome analysis technology out of the pattern recognition research laboratory and into the realm of clinical genetics and cytogenetics research. In our opinion this system embodies the best of 1973 levels of technology as it can be applied to automated chromosome analysis. Further testing and development promise to bridge the gap so that the near future will see automated karyotyping take its place beside other sophisticated automated laboratory procedures.

SECTION X

REFERENCES

1. Castleman, K. R. and Wall, R. J., "Automatic Karyotyping with Pictorial Output," JPL Report 1200-54, June 25, 1973.

2. Wright, S. W., Crandall, B. F., Boyer, L., Eds: Perspectives in Cytogenetics. Charles Thomas, Publisher; Springfield, 1972, 316-323.

3. RFP NICHD-CMS-72-3, Issued by the National Institute of Child Health and Human Development, March 15, 1972.

4. JPL Proposal No. 82-68, CSPO Document No. 1200-36, May 2, 1972.

5. Green, D. K., Cameron, J., "Metaphase Cell Finding by Machine." Cytogenetics, 11:475, 1972.

6. Mendelsohn, M. L., Mayall, B. H., "Computer-Oriented Analysis of Human Chromosomes III: Focus." Computers in Biology and Medicine, 2:137, 1972.

7. Kujoory, M. A., Mayall, B. H., Mendelsohn, M. L., "Focus-Assist for a Flying Spot Microscope." IEEE Trans. Biomedical Engineering, BME-20: 126, 1973.

8. DEC-11-HDRC-0, DR11-B Manual, Published by Digital Equipment Corporation, 1973.

9. Caspersson, T., Lomakka, G. and Möller, A., "Computerized Chromosome Identification by Aid of the Quinacrine Mustard Fluorescence Technique," Hereditas, 67: 3, 1971.

10. Lubbs, H. A. and Ledley, R. S., "Automated Analysis of Differentially Stained Human Chromosome," Nobel 23 (1973) Chromosome Identification, pp. 61-70, Academic Press, 1973.

11. Capersson, T., Castleman, K. R. et al., "Automatic Karyotyping of Quinacrine Mustard Stained Human Chromosomes," Exptl. Cell. Res. 67: 233, 1971.

12. Granlund, G. H., "The Use of Distribution Functions to Describe Integrated Profiles of Human Chromosomes," Nobel 23 (1973) Chromosome Identification, pp. 85-87, Academic Press, 1973.

NASA — JPL — Coml., L.A., Calif.