General Disclaimer

One or more of the Following Statements may affect this Document

- This document has been reproduced from the best copy furnished by the organizational source. It is being released in the interest of making available as much information as possible.

- This document may contain data, which exceeds the sheet parameters. It was furnished in this condition by the organizational source and is the best copy available.

- This document may contain tone-on-tone or color graphs, charts and/or pictures, which have been reproduced in black and white.

- This document is paginated as submitted by the original source.

- Portions of this document are not fully legible due to the historical nature of some of the material. However, it is the best reproduction available from the original submission.

Produced by the NASA Center for Aerospace Information (CASI)

NASA TECHNICAL MEMORANDUM

NASA TM X- 73956-7

NASA TM X- 73956-7

(NASA-TM-X-73956-7) LaRC DESIGN ANALYSIS REPORT FOR NATIONAL TRANSONIC FACILITY FOR 9% NICKEL TUNNEL SHELL. VOLUME 7: SPECIAL STUDIES (NASA) 35 p HC $4.00 CSCL 13M

N76-33549

Unclas
G3/39 05765

LaRC DESIGN ANALYSIS REPORT

FOR

NATIONAL TRANSONIC FACILITY

FOR

9% NICKEL TUNNEL SHELL

SPECIAL STUDIES

VOL. 7

BY

JAMES W. RAMSEY, JR., JOHN T. TAYLOR, JOHN F. WILSON,
CARL E. GRAY, JR., ANNE D. LEATHERMAN, JAMES R. ROOKER,
AND JOHNNY W. ALLRED

This informal documentation medium is used to provide accelerated or special release of technical information to selected users. The contents may not meet NASA formal editing and publication standards, may be revised, or may be incorporated in another publication.

NASA
National Aeronautics and
Space Administration

Langley Research Center
Hampton, Virginia 23665

OCT 1976
RECEIVED
NASA STI FACILITY
INPUT BRANCH

1. Report No.	2. Government Accession No.	3. Recipient's Catalog No.
TM X-73956-7		

4. Title and Subtitle	5. Report Date
LaRC Design Analysis Report for the National Transonic Facility for a 9% Nickel Tunnel Shell - Special Studies, Vol. 7	September 1976
	6. Performing Organization Code
7. Author(s) J. W. Ramsey, Jr., J. T. Taylor, J. F. Wilson, C. E. Gray, Jr., A. D. Leatherman, J. R. Rooker, and J. W. Allred	8. Performing Organization Report No.
	10. Work Unit No.
9. Performing Organization Name and Address National Aeronautics and Space Administration Langley Research Center Hampton, Virginia 23665	11. Contract or Grant No.
	13. Type of Report and Period Covered Technical Memorandum X
12. Sponsoring Agency Name and Address National Aeronautics and Space Administration Washington, DC 20546	14. Sponsoring Agency Code

15. Supplementary Notes

Formal Documentation of Design Analyses to Obtain Code Approval of Fabricated National Transonic Facility

16. Abstract This report contains the results of extensive computer (finite element, finite difference and numerical integration), thermal, fatigue, and special analyses of critical portions of a large pressurized, cryogenic wind tunnel (National Transonic Facility). The computer models, loading and boundary conditions are described. Graphic capability was used to display model geometry, section properties, and stress results. A stress criteria is presented for evaluation of the results of the analyses. Thermal analyses were performed for major critical and typical areas. Fatigue analyses of the entire tunnel circuit is presented.

The major computer codes utilized are: SPAR - developed by Engineering Information Systems, Inc. under NASA Contracts NAS8-30536 and NAS1-13977; SALORS - developed by Langley Research Center and described in NASA TN D-7179; and SRA - developed by Structures Research Associates under NASA Contract NAS1-10091; "A General Transient Heat-Transfer Computer Program for Thermally Thick Walls" developed by Langley Research Center and described in NASA TM X-2058.

17. Key Words (Suggested by Author(s))	18. Distribution Statement
Pressure Vessel Wind Tunnel Finite Element Numerical Integration Design	UNCLASSIFIED - UNLIMITED

19. Security Classif. (of this report)	20. Security Classif. (of this page)	21. No. of Pages	22. Price*
Unclassified	Unclassified	34	$3.75

*For sale by the National Technical Information Service, Springfield, Virginia 22151

NTF TUNNEL SHELL
NASA LaRC

SPECIAL STUDIES

9% Ni

SEPTEMBER 1976

VOLUME 7

LaRC CALCULATIONS

FOR THE

NATIONAL TRANSONIC FACILITY

TUNNEL SHELL

DATE: SEPTEMBER, 1976

APPROVED:

DR. JAMES W. RAMSEY, JR., HEAD
STRUCTURAL ENGINEERING SECTION

ANALYSTS:

JOHN T. TAYLOR
HEAD SHELL ANALYST

JOHN F. WILSON, SHELL WORK
PACKAGE & CONSTRUCTION MANAGER

CARL E. GRAY, JR.
SHELL ANALYST

ANNE D. LEATHERMAN
SHELL PROGRAMMER

JAMES R. ROOKER
SHELL/THERMAL ANALYST

JOHNNY W. ALLRED
SHELL/THERMAL ANALYST

This report is one volume of a Design Analysis Report prepared by LaRC on portions of the pressure shell for the National Transonic Facility. This report is to be used in conjunction with reports prepared under NASA Contract NAS1-13535(c) by the Ralph M. Parsons Company (Job Number 5409-3 dated September 1976) and Fluidyne Engineering Corporation (Job Number 1060 dated September 1976). The volumes prepared by LaRC are listed below:

1. Finite Difference Analysis of Cone/Cylinder (9% Ni), Vol. 1, NASA TM X73956-1.

2. Finite Element Analysis of Corners #3 and #4 (9% Ni), Vol. 2, NASA TM X73956-2.

3. Finite Element Analysis of Plenum Region Including Side Access Reinforcement, Side Access Door and Angle of Attack Penetration (9% Ni), Vol. 3, NASA TM X73956-3.

4. Thermal Analysis (9% Ni), Vol. 4, NASA TM X73956-4.

5. Finite Element and Numerical Integration Analyses of the Bulkhead Region (9% Ni), Vol. 5, NASA TM X73956-5.

6. Fatigue Analysis (9% Ni), Vol. 6, NASA TM X73956-6.

7. Special Studies (9% Ni), Vol. 7, NASA TM X73956-7.

NTF DESIGN CRITERIA
FOR 9% NICKEL

GENERAL

THE DESIGN OF THE PRESSURE SHELL REFLECTED IN THIS REPORT SATISFIES THE DESIGN REQUIREMENTS OF THE ASME BOILER AND PRESSURE VESSEL CODE, SECTION VIII, DIVISION 1. SINCE DIVISION 1 DOES NOT CONTAIN RULES TO COVER ALL DETAILS OF DESIGN, ADDITIONAL ANALYSES WERE PERFORMED IN AREAS HAVING COMPLEX CONFIGURATIONS SUCH AS THE CONE CYLINDER JUNCTIONS, THE GATE VALVE BULKHEADS, THE BULKHEAD-SHELL ATTACHMENTS, THE PLENUM ACCESS DOORS AND REINFORCEMENT AREAS, THE ELLIPTICAL CORNER SECTIONS, AND THE FIXED REGION (RING S8) OF THE TUNNEL. THE DIVISION 1 DESIGN CALCULATIONS, THE ADDITIONAL ANALYSES AND THE CRITERIA FOR EVALUATION OF THE RESULTS OF THE ADDITIONAL ANALYSES TO ENSURE COMPLIANCE WITH THE INTENT OF DIVISION 1 REQUIREMENTS ARE CONTAINED IN THE TEXT OF THIS REPORT. THE DESIGN ANALYSES AND ASSOCIATED CRITERIA CONSIDERED BOTH THE OPERATING AND HYDROSTATIC TEST CONDITIONS.

IN CONJUNCTION WITH THE DESIGN, A DETAILED FATIGUE ANALYSIS OF THE PRESSURE SHELL WAS ALSO PERFORMED UTILIZING THE METHODS OF THE ASME CODE, SECTION VIII, DIVISION 2.

MATERIAL

THE PRESSURE SHELL MATERIAL SHALL BE ASME, SA-553-1 FOR PLATE AND SA-522 FOR FORGINGS. THE MATERIAL PROPERTIES AT TEMPERATURES EQUAL TO OR BELOW 150°F ARE AS FOLLOWS:

(A) PLATE, 2.0 INCHES OR THINNER

YIELD = 85.0 KSI
ULTIMATE = 100 KSI

(B) WELDS (AUTOMATIC AND SEMIAUTOMATIC)

YIELD = 52.5 KSI
ULTIMATE = 95.0 KSI

(C) WELDS (HAND)

YIELD = 58.5 KSI
ULTIMATE = 95.0 KSI

OPERATING, DESIGN AND TEST CONDITIONS

THE OPERATING, DESIGN AND TEST CONDITIONS FOR THE TUNNEL PRESSURE SHELL AND ASSOCIATED SYSTEMS AND ELEMENTS ARE SUMMARIZED BELOW:

1. OPERATING MEDIUM

   ANY MIXTURE OF AIR AND NITROGEN

2. DESIGN TEMPERATURE RANGE

   MINUS 320 DEGREES FAHRENHEIT TO PLUS 150 DEGREES FAHRENHEIT, EXCEPT IN THE REGION OF THE PLENUM BULKHEADS AND GATE VALVES INSIDE A 23-FOOT, 4-INCH DIAMETER, FOR WHICH THE TEMPERATURE RANGE IS MINUS 320 DEGREES FAHRENHEIT TO PLUS 200 DEGREES FAHRENHEIT.

3. PRESSURE RANGE

	TUNNEL CONFIGURATION	OPERATING PRESSURE RANGE, PSIA	DESIGN PRESSURES PSID
A.	CONDITION I - PLENUM ISOLATION GATES OPEN AND TUNNEL OPERATING:		
	TUNNEL CIRCUIT EXCEPT PLENUM	8.3 to 130	A. 8 EXTERNAL B. 119 INTERNAL
	PLENUM (PLENUM PRESSURE IS LIMITED TO .4 TO 1 TIMES THE REMAINDER OF THE TUNNEL CIRCUIT	3.3 to 130	A. 15 EXTERNAL B. 119 INTERNAL
	BULKHEAD		56 (EXTERNAL TO PLENUM)
B.	CONDITION II - PLENUM ISOLATION GATES OPEN AND TUNNEL SHUTDOWN:		
	ENTIRE TUNNEL CIRCUIT	8.3 to 130	A. 8 EXTERNAL B. 119 INTERNAL
	BULKHEAD		0

C. CONDITION III - PLENUM ISOLATION GATES AND ACCESS DOORS CLOSED:

TUNNEL CIRCUIT EXCEPT PLENUM	8.3 to 130	A. 8 EXTERNAL B. 119 INTERNAL
PLENUM (PLENUM OPERATING PRESSURE CAN EXCEED THE PRESSURE IN THE REMAINDER OF THE TUNNEL CIRCUIT BY 24 PSI, BUT DOES NOT EXCEED THE 130 PSIA MAXIMUM OPERATING PRESSURE)	0 to 130	A. 15 EXTERNAL B. 119 INTERNAL
BULKHEAD		A. 25 (INTERNAL TO PLENUM) B. 119 (EXTERNAL TO PLENUM) FOR MINUS 320 DEGREES FAHRENHEIT TO PLUS 150 DEGREES FAHRENHEIT *C. 110.5 (EXTERNAL TO PLENUM) FOR PLUS 151 DEGREES FAHRENHEIT TO PLUS 200 DEGREES FAHRENHEIT

*OPERATING PROCEDURES LIMIT PRESSURES TO THAT SHOWN.

D. CONDITION IV - PLENUM ISOLATION GATES CLOSED AND ACCESS DOORS OPEN:

TUNNEL CIRCUIT EXCEPT PLENUM	8.3 to 130	A. 8 EXTERNAL B. 119 INTERNAL
PLENUM	14.7	0
BULKHEAD		A. 119 (EXTERNAL TO PLENUM) FOR MINUS 320 DEGREES FAHRENHEIT TO PLUS 150 DEGREES FAHRENHEIT *B. 110.5 (EXTERNAL TO PLENUM) FOR PLUS 151 DEGREES FAHRENHEIT TO PLUS 200 DEGREES FAHRENHEIT

*OPERATING PROCEDURES LIMIT PRESSURES TO THAT SHOWN.

4. HYDROSTATIC TEST DESIGN CONDITIONS

THE PRESSURE SHELL WAS DESIGNED FOR HYDROSTATIC TEST IN ACCORDANCE WITH THE REQUIREMENTS OF THE ASME CODE, SECTION VIII, DIVISION 1. THE TEST PRESSURES SHALL BE AS FOLLOWS. PRESSURE SHELL TEMPERATURE SHALL BE EQUAL TO OR BELOW 100°F DURING HYDROSTATIC TESTS.

CONDITION (1) - MAXIMUM INTERNAL PRESSURE CONDITION FOR THE ENTIRE TUNNEL CIRCUIT

$$PH_1 = 1.5\ (119) + \text{HYDROSTATIC HEAD}$$
$$= 178.5\ \text{PSI} + \text{HYDROSTATIC HEAD}$$

CONDITION (2) - MAXIMUM DIFFERENTIAL PRESSURE CONDITION ACROSS THE PLENUM BULKHEADS

$$PH_2 = 1.5\ (119) + \text{HYDROSTATIC HEAD}$$
$$= 178.5 + \text{HYDROSTATIC HEAD}$$

$$PH_2{}^* = 1.5\ (111.5)\ \left(\frac{23.7}{22.2}\right) + \text{HYDROSTATIC HEAD}$$

$$= 178.5 + \text{HYDROSTATIC HEAD}$$

*TUNNEL OPERATION LIMITATIONS PRECLUDE PRESSURE DIFFERENTIALS ACROSS BULKHEADS IN EXCESS OF 110.5 PSI FOR BULKHEAD AND GATE TEMPERATURES IN EXCESS OF 150°F.

CONDITION (3) - MAXIMUM REVERSE DIFFERENTIAL PRESSURE CONDITION ACROSS THE PLENUM BULKHEADS

$$PH_3 = 1.5\ (25) = 37.5\ \text{PSI}$$

THE PRESSURE SHELL EXCEPT FOR THE PLENUM SHALL BE PRESSURIZED TO 141 PSIG. THE PLENUM SHALL BE PRESSURIZED TO 178.5 PSIG.

PRESSURE SHELL STRESS EVALUATION CRITERIA

THIS CRITERIA ESTABLISHES THE BASIS FOR ANALYSIS AND DESIGN OF THE PRESSURE SHELL SO IT WILL MEET OR EXCEED ALL OF THE REQUIREMENTS OF SECTION VIII, DIVISION 1 OF THE ASME BOILER AND PRESSURE VESSEL CODE AND CAN BE STAMPED WITH A DIVISION 1 "U" STAMP.

1. SECTION VIII, DIVISION 1, DIRECT APPLICATION

A. THE MAXIMUM ALLOWABLE STRESS (S)

$S = 23.7$ KSI (-320°F TO +150°F)

$S = 22.2$ KSI (-320°F TO +200°F)

(B) PRIMARY BENDING PLUS PRIMARY MEMBRANE STRESSES

THE LOCAL MEMBRANE STRESSES ARE NOT GENERALLY CONSIDERED IN SECTION VIII, DIVISION 1 DESIGNS. HOWEVER, FOR THE PURPOSE OF DESIGNING LOCAL REINFORCEMENT AT BRACKETS, RINGS OR PENETRATIONS NOT COVERED BY DESIGN BASED ON STRESS ANALYSIS, THE LOCAL SHELL MEMBRANE STRESS SHALL BE:

$$P_b + P_m \leq 1.5\ SE$$

NOTE: E IS JOINT EFFICIENCY

2. IN REGIONS OF THE PRESSURE SHELL WHERE DIVISION 1 DOES NOT CONTAIN RULES TO COVER ALL DETAILS OF DESIGN (REF. U-2(g)), ADDITIONAL ANALYSES WERE PERFORMED UTILIZING THE GUIDELINES OF THE ASME CODE, SECTION VIII, DIVISION 2, APPENDIX 4, "DESIGN BASED ON STRESS ANALYSIS." THE BASIC STRESS CRITERIA FOR DIVISION 2 IS REPRESENTED IN FIGURE 4-130.1 AND RESTATED BELOW INDICATING ANY MODIFICATIONS OR EXCESS REQUIREMENTS APPLIED TO IT TO REMAIN WITHIN THE INTENT OF DIVISION 1 AND TO OBTAIN A DIVISION 1 STAMP.

A. GENERAL PRINCIPAL MEMBRANE STRESS

MAXIMUM ALLOWABLE STRESS

$S = 23.7$ KSI (-320°F TO +150°F)

$S = 22.2$ KSI (-320°F TO +200°F)

MAXIMUM ALLOWABLE STRESS INTENSITY

$S_m = 31.7$ KSI (-320°F TO +200°F)

B. PRIMARY GENERAL MEMBRANE STRESS INTENSITY

$$P_m \leq S_m$$

AND IN ORDER TO COMPLY WITH DIVISION 1, THE MAXIMUM PRINCIPAL MEMBRANE STRESS MUST BE:

$$P_m^* \leq S$$

NOTE: THE * IS USED TO DENOTE THAT MAXIMUM PRINCIPAL STRESSES ARE TO BE COMPUTED FOR THE GIVEN LOADING CONDITION. THE INTENT IS TO DETERMINE THE STRESSES WHICH REPRESENT THE HOOP STRESSES AND MERIDIONAL STRESSES WHICH ARE THE STRESSES USED IN DIVISION 1 COMPUTATIONS.

C. DESIGN LOADS, PRIMARY LOCAL MEMBRANE STRESS INTENSITY

$$P_L \leq 1.5\ S_m$$

NOTE: LOCAL MEMBRANE STRESS INTENSITY IS DEFINED IN ACCORDANCE WITH DIVISION 2, APPENDIX 4-112(i). THE TOTAL MERIDIONAL LENGTH IS CONSIDERED TO BE 1.0 $\sqrt{RT}$.

D. DESIGN LOADS, PRIMARY LOCAL MEMBRANE PLUS PRIMARY BENDING STRESS INTENSITY

$$P_L + P_b \leq 1.5\ S_m$$

E. OPERATING LOADS, PRIMARY PLUS SECONDARY STRESS INTENSITY

$$P_L + P_b + Q \leq 3\ S_m$$

F. COMMENT

BECAUSE OF THE LOW YIELD STRENGTH EXPECTED AT THE WELDS AS COMPARED TO THE YIELD STRENGTH OF THE PLATE, STRESS INTENSITIES COMPUTED IN (A), (B), (C), (D), OR (E) SHALL NOT EXCEED THE YIELD STRENGTH OF THE MATERIAL AT EITHER WELD OR PLATE LOCATIONS.

3. A FATIGUE ANALYSIS WAS CONDUCTED IN ACCORDANCE WITH SECTION VIII, DIVISION 2 WITHOUT MODIFICATION.

4. HYDROSTATIC TEST CONDITION DESIGN CONSIDERATIONS

A. PRESSURE SHELL

IN ACCORDANCE WITH DIVISION 1 OF THE ASME CODE, DESIGN ANALYSIS OF THE PRESSURE SHELL FOR THE HYDROSTATIC TEST CONDITION IS NOT REQUIRED. HOWEVER, IN ORDER TO PROVIDE A SATISFACTORY ENGINEERING DESIGN FOR THE PRESSURE SHELL THE FOLLOWING CRITERIA WAS USED:

(a) THE MAXIMUM GENERAL MEMBRANE STRESS PERPENDICULAR TO A WELD LINE WAS LIMITED TO THE LESSER OF:

$$P_m{}^* \leq 0.8 \text{ WELD YIELD STRESS}$$

OR

$$P_m{}^* \leq 0.5 \text{ WELD ULTIMATE STRESS}$$

(b) THE GENERAL PRINCIPAL MEMBRANE STRESS IN THE PLATE (NOT AT A WELD) WAS LIMITED TO THE LESSER OF:

P_m * $\leq$ 0.8 PLATE YIELD STRESS

P_m * $\leq$ 0.5 PLATE ULTIMATE STRESS

(*) THE STRESSES SATISFYING THIS CRITERIA ARE BASED ON MAXIMUM MEMBRANE STRESSES RATHER THAN INTENSITY CRITERIA.

---TABLE OF CONTENTS---

	PAGE
Position Paper on Limit (Shape) Factors - - - - - - - - - -	1
Dynamics Study -	10

POSITION PAPER

ON

LIMIT (SHAPE) FACTORS

FOR

NTF

BY

J. W. RAMSEY, JR.

J. R. ROOKER

STRUCTURAL ENGINEERING SECTION

6/24/76

OUTLINE

1.0 Definition

1.1 Limit Factor

1.2 Shape Factor

2.0 Assumptions

3.0 Pure Bending

3.1 Shape Factor

3.2 Summary Table

4.0 Bending + Membrane

4.1 Limit Factor

5.0 Presentation of Limit Factors

5.1 Significance of Shape and Limit Factors

5.2 Interpretation of Limit Factors

5.3 NTF Design Envelope

6.0 Application of Limit Factors in NTF Design

LIST OF SYMBOLS

A	Beam cross section area
"M"	Moment producing full yielding when membrane stresses are present
P_b	Bending stress
P_m	Membrane stress
S	ASME Pressure Vessel Code, Section VIII, Div. I Membrane Allowable
S_y	Yield stress
Y_c	Location of elastic neutral axis
Y_p	Location of plastic neutral axis

POSITION ON SHAPE FACTORS

1.0 Definition

1.1 Limit factor is the ratio of the magnitude of the equivalent moment (considering both bending and membrane) required to produce full yielding over a beam cross section to the equivalent moment required to produce initial yielding.

1.2 Shape factor is a special case of the limit factor when the membrane stress is zero.

2.0 Assumptions

2.1 The material is perfectly elastic-plastic.

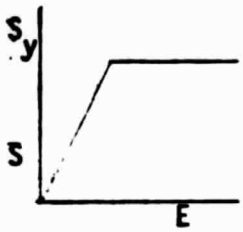

This is conservative because ultimate strength (strain hardening) is neglected.

In addition, the conservative assumption that formation of one plastic hinge constitutes a failure is imposed.

3.0 Pure Bending

3.1 Shape Factor. In the development of the shape factor, the elastic definition of section moment and location of neutral axis (Y_c) is used. The bending stress at the beam extreme fibers, calculated on an elastic basis, must be less than the shape factor times the yield stress to prevent the one plastic hinge from forming.

$$P_b \leq \frac{\text{Shape Factor} \times S_y}{\text{factor of safety}} \qquad \text{for pure bending}$$

3.2 Summary Table. Shape factors for several different cross sections based on the above assumptions are tabulated below for pure bending.

Cross Sectional Shape	Shape Factor
Rectangle	1.5
"T" Bar	1.8
Wide Flange	1.15
Unsymmetrical Wide Flange	1.35

4.0 Bending Plus Membrane

4.1 Limit Factor. For the general case of membrane (P_m) plus bending (P_b) the shape factor becomes a "limit factor". The location of the neutral axis in the fully plastic state (Y_p) must be computed by summing the forces acting on the cross sectional area A

$$\sum_A F = P_m$$

and the moment for the fully plastic state is defined as

$$\text{"M"} = \int \sigma y \, dA \quad \text{and limit factor} \equiv \frac{\text{"M"} + P_m A(Y_p - Y_c)}{M_y}$$

where the numerator is the equivalent moment referred to in the definition.

$$P_b + P_m \leq \frac{\text{limit factor} \times S_y}{\text{factor of safety}}$$ for bending plus membrane.

5.0 Presentation of Limit Factors

5.1 Significance of Limit Factor. Limit factor curves for combined bending and membrane ($P_b + P_m$) versus primary membrane stress (P_m) have been computed for beams (previously tabulated) and are presented as figure 1. Both the ordinate and absissa have been made nondimensional by dividing by the yield stress, S_y. In this form the ordinate represents a special case of the limit factors, i.e. the "shape factor." The importance of limit factor in the design process is that it allows higher design stress for the combined stress case as compared to a pure general membrane stress case. This is due to the increase in stress allowed because the beam is under a nonuniform section stress.

5.2 Interpretation of Shape Factors. Note that the lowest shape factor is associated with a symmetrically stressed wide flange. Unsymmetrically stressed flanges improve the shape factor. The largest shape factor results from "tee" and rectangular beams. The symmetrical wide flange section does not lend itself to fabrication of pressure vessels and therefore should be ignored in the following discussion. The unsymmetrical wide flange beam and the tee beam are commonly used as rings on the shell, reinforcement on and around openings, etc.

5.3 NTF Design Envelope In the lower corner of the plot is the design envelope for the NTF with the 9% Nickel steel based on the criteria established by Section VIII, Division I of the pressure vessel code which is based on ultimate strength not the assumed yield strength:

$$\text{Allowable primary membrane stress} \leq \frac{S}{4} \text{ ultimate} = 23.7 \text{ ksi}$$

$$\text{Allowable primary bending plus primary local membrane} \leq \frac{1.5 \times S \text{ ultimate}}{4} = 35.6 \text{ ksi}$$

Since ultimate stress is controlling
These criteria are valid for both plate and welded construction

Position.- The design criteria established for the NTF states that the allowable stress is equal to 5/8 yield stress or 1/4 the ultimate stress whichever is smaller. It turns out that for 9% nickel in all conditions (plate or as welded) the ultimate stress controls the allowable stress. The resulting design envelope on figure 1 shows $\frac{S}{4}$ ult. for the allowable in primary membrane stress and 1.5 $\frac{S}{4}$ ult. for

The shape factor or limit stress for beams under combined bending and primary stress is an indication of the increase in allowable that is available because of the nonuniform section stress distribution for the beam in bending. Thus for a fixed factor of safety, different beam sections will have different design allowables in bending. The unsymmetrical wide flange or tee beam sections found in practical pressure vessel structures can be increased 35 and 78 percent respectively in pure bending.

Division I rules provide examples which show a uniform shape factor or limit stress factor of 1.5. This factor has been assumed for the definition of the NTF design envelop shown.

In interpreting the influence of shape factor on limit stress ~~factor~~ in the design process we must consider the factor of safety provided based on failure - where failure is defined as the development of one plastic hinge (one section of the beam completely at yield stress). For the worst "as welded" condition the yield stress of 9% nickel is 52.5 ksi. For combined bending and membrane stress two allowables have been defined

(1) $Sa_1 = 1.5 \frac{SU}{4}$

(2) $Sa_2 = 1.0 \frac{SU}{4}$

Thus for a shape factor or limit stress factor of 1.0 the factor of safety based on failure is:

$$1.0 \times \frac{52.5}{Sa}$$

for: Sa_1 the factor of safety = 1.48

S_{a2} the factor of safety = 2.21

Therefore the factor of safety can be computed for any shape factor or limit stress factor and for any definition of design stress allowable.

REPRODUCIBILITY OF THE ORIGINAL PAGE IS POOR

Figure 2 presents a plot of factor of safety versus shape factor or limit stress factor for the two definitions of design allowable. Also shown is the required factor of safety imposed by ASME Pressure Vessel Code Section VIII Div. I for a shape factor of 1.5.

It is noted that certain beam geometries afford lower factors of safety than others. In general, however, practical beams for pressure vessel structures such as the "unsymmetrical-wide-flange and "tee" beams are adequately represented by assuming a shape factor of 1.5 (to within 10 percent). Although I beams and round tubes afford a significantly lower factor of safety, this application in the pressure shell design is not apparent.
/

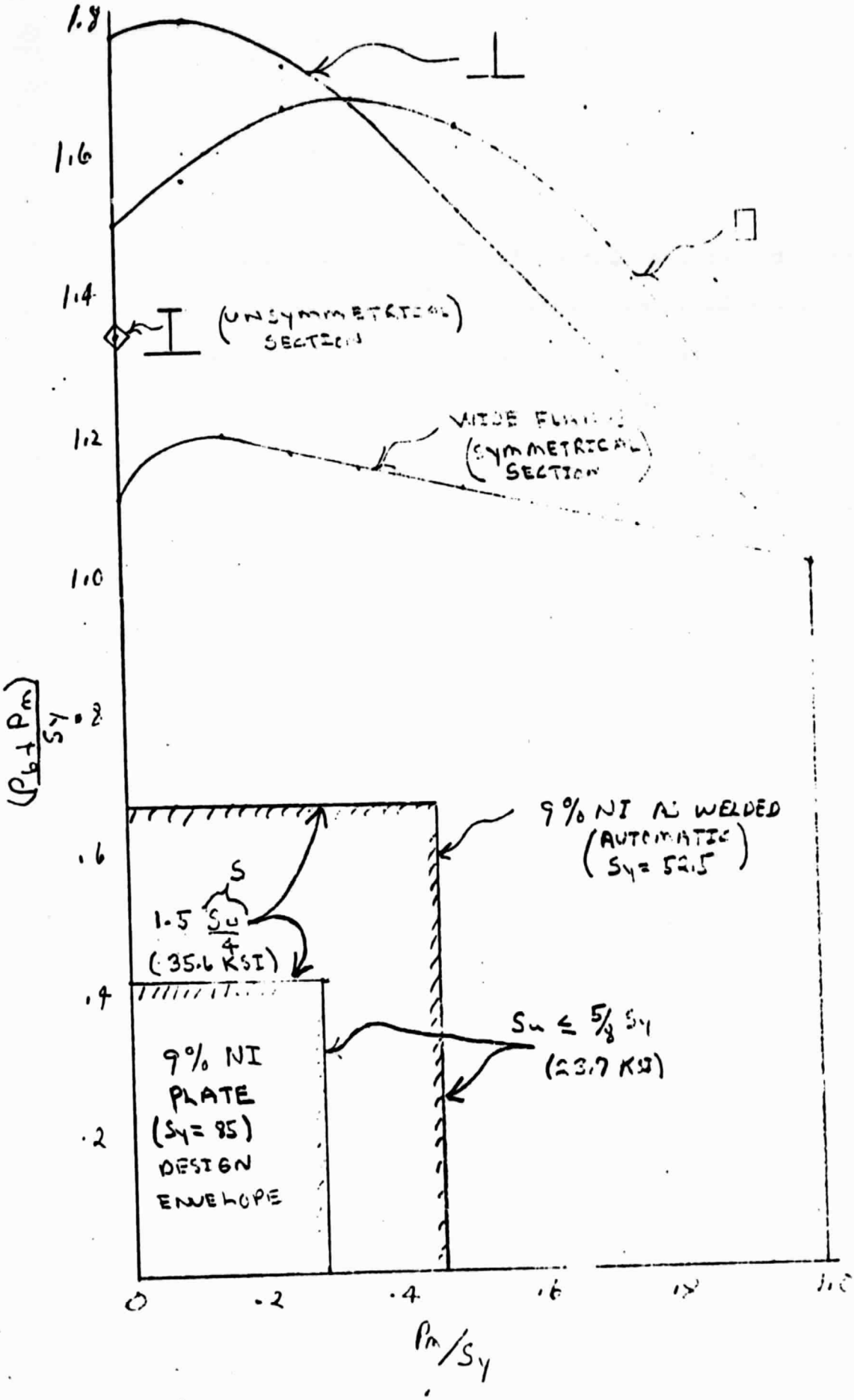

FIGURE 1 - LIMIT FACTOR CURVES AND NTF DESIGN ENVELOPE

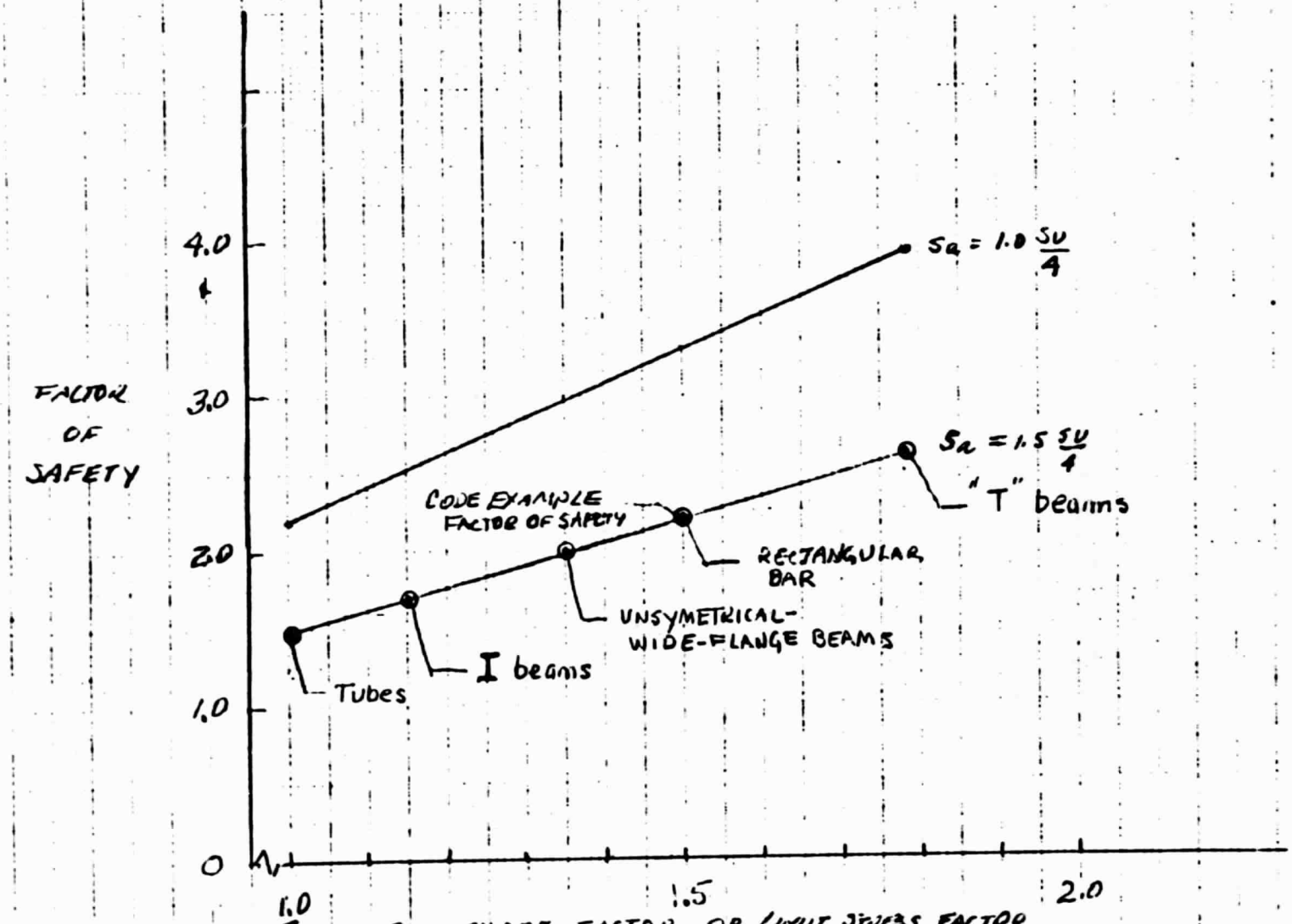

Figure 2 — SHAPE FACTOR OR LIMIT STRESS FACTOR

NTF SHELL

A. STRESSES, DEFLECTIONS, AND NATURAL FREQUENCIES

B. DEFLECTION ENVELOPE IN FAN (BLADE TIP) REGION

BY

JAMES W. RAMSEY, JR.

12/5/75

UPDATED 12/17/75

UPDATED 12/24/75

UPDATED 1/18/76

The peak stresses in the shell will be given according to below configuration.

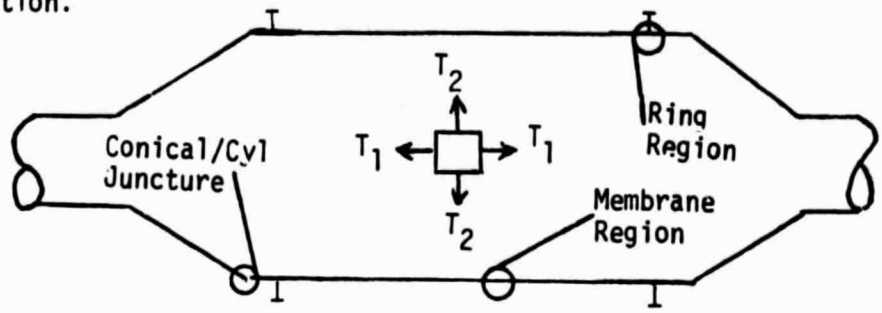

Figure 1 - Shell

The stresses for the membrane region are:

$$T_1 = \frac{pR}{2T} \quad \text{and} \quad T_2 = \frac{pR}{T} \tag{1}$$

The stresses for the ring region are:

$$T_1 = \frac{p\,R\,e^{-\lambda x}(\cos \lambda x + \sin \lambda x)}{\left(0.551 + \frac{0.857T}{A}\sqrt{RT}\right)T} \tag{2}$$

and

$$T_2 = \frac{pR}{T}\, e^{-x\lambda} \cos \lambda x \tag{3}$$

These variables are defined as

T_1 long. stress

T_2 Hoop stress

p pressure

T Shell thickness

R Mid-surface radius

A Cross section of ring

λ Wall characteristic $\sqrt[4]{\frac{3(1-\mu^2)}{R^2\,T^2}}$

μ Poisson's Ratio = 0.3

E Modulus of elasticity

The radial deflections are governed by the equation:

$$w = \frac{R}{E}(T_2 - \mu T_1) \tag{4}$$

A summary of the NTF shell regions for mid-surface radii, thicknesses, areas of rings, stresses and deflections are given in Tables 1 and 2.

TABLE 1 - NTF MEMBRANE REGIONS IN SHELL

R_{MID}	T_{SHELL}	PRESSURE = 119 PSIG	
		STRESS	DEFLECTION
INCHES	INCHES	KSI	INCHES
157.25	0.75	24.95	0.115
246.594	1.188	24.70	0.179
		(24.63	0.176 NASTRAN By SES/RFED)
168.40	0.813	24.65	0.122
120.31	0.625	22.91	0.0808
132.344	0.688	22.89	0.0888
150.375	0.750	23.86	0.105 (Fan)
132.344	0.688	22.89	0.0888
144.344	0.688	24.97	0.1056
246.6	1.24	23.64	0.169 NASTRAN SES/RFED

REPRODUCIBILITY OF THE ORIGINAL PAGE IS POOR

TABLE 2 - NTF RING REGION IN SHELL AT 119 PSIG

R_{MID} INCHES	T INCHES	A_{RING} SQ. IN.	STRESS LONG. KSI	STRESS HOOP KSI	DEFLECTION RING INCHES
157.75	0.75	13.75	16.50	9.48	0.0246
*246.594	1.188	36.00	19.09	13.59	0.0655
168.4065	0.813	34.00	24.94	13.56	0.0353
		18.00	22.10	16.02	0.0545
120.3125	0.625	18.75	25.81	14.89	0.0297
		8.00	16.19	12.60	0.0321
132.344	0.688	8.00	14.60	12.59	0.0375
		30.00	24.80	12.59	0.0235
132.344	0.688	12.375	15.93	8.70	0.0179
		13.75	16.69	8.70	0.0169
		30.00	24.80	12.59	0.0235
144.344	0.688	30.00	16.71	13.73	0.0434
		18.00	25.61	16.23	0.0425
*SES/RFED Computer Results for 4th Turn Through Test Section			→ f_m=40.88Hz		
Ring			19.50	15.75	0.0990
Conical/Cyl. Joint Long.Weld Only	Peak Bending		29.42	15.89	-0.1370
	Top		31.12	50.65	
	Bottom		-12.60	45.83	
150.375	0.75	8.00	13.59	13.12	0.0469 (fan)

The shell natural frequencies for clamped-clamped end supports will be calculated from the Donnell-Mushtari theory using the Galerkin method which is a trial and error procedure for each region of the shell.

$$f_m = \frac{(1-\nu^2)C_1 + \beta n^4 C_2^2}{2\pi R}\sqrt{\frac{E}{\rho(1-\nu^2)}}$$

$$f_m = \frac{(0.91)C_1 + \frac{T^2}{12R^2} n^4 C_2^2}{2\pi R}\sqrt{\frac{29\times10^6(386)}{.283(.91)}} \qquad (5a)$$

$$f_m = \left[(0.91)C_1 + \frac{T^2}{12R^2} n^4 C_2^2\right]\frac{33181.72}{R}$$

The shell natural frequencies for shear diaphragm end supports will be determined from the Arnold-Warburton theory using the Rayleigh-Ritz method:

$$f_m = \frac{\frac{K_0}{K_1}\left[1 + \frac{K_0 K_2}{K_1^2}\right]}{2\pi R}\sqrt{\frac{E}{\rho(1-\nu^2)}} \qquad (5b)$$

where

$$K_0 = \frac{1}{2}((1-\nu)^2)(1+\nu)\lambda^4 + \frac{1}{2}(1-\nu)\beta\left[(\lambda^2+n^2)^4 - 8\lambda^2 n^4 - 2n^6 + n^4\right]$$

$$K_1 = \frac{1}{2}(1-\nu)(\lambda^2+n^2)^2 + \frac{1}{2}(3-\nu-2\nu^2)\lambda^2 + \frac{1}{2}(1-\nu)n^2 + \frac{1}{2}(3-\nu)\beta(\lambda^2+n^2)^3$$

$$K_2 = 1 + \frac{1}{2}(3-\nu)(\lambda^2+n^2)$$

and $\lambda = \frac{m\pi R}{L}$ $\qquad \beta = \frac{T^2}{12R^2}$

for n circumferential waves
m axial halfwaves } defines mode shape

A summary of the NTF shell natural frequencies are given in the three attached shell plan views with titles of (1) Operating Mode, (2) "6.7 psia Failure Mode , and (3) Full Vacuum Shell. The natural frequencies for the basic shell in the operating mode (minimum support for H_2O during hydro test and for shell during operation) are from 13.55 to 31.58 Hz. The natural frequency in the fan region is 15.37 cps. The dynamic deflection in the fan area will be based on a driving force of 0 - 11.7 Hz. This is determined by the fan operation of 0 - 700 RPM. Since the shell natural frequency in the fan region is 15.37 Hz, the dynamic deflection will be largest near that frequency; therefore, the driving frequency will be assumed to be the top speed of 11.7 Hz. The desired design natural frequency of the shell in this region would be $\geq$ 16.7 Hz.

The natural frequencies for the "6.7 psia Failure Mode" are 18.20, 19.15, and 22.14 - 39.35 Hz. The desired design natural frequency of $\geq$ 16.7 Hz is accomplished in the fan region for this ring configuration - ie 28.96 Hz. All natural frequencies are above the 16.7 Hz design frequency.

The natural frequencies for the "Full Vacuum Shell" (current A/E SOW) configuration are 26.92 - 78.39 Hz. Equations (5a) and (5b) have been programmed on a desk top computer and can be utilized to "automatically" update the natural frequencies as the NTF detail design developes.

The fourth attached shell plan view lists the shell thicknesses and ring areas used to meet a "Full Vacuum" capability.

REPRODUCIBILITY OF THE
ORIGINAL PAGE IS POOR

RAMSL . WILSON 12-16-75

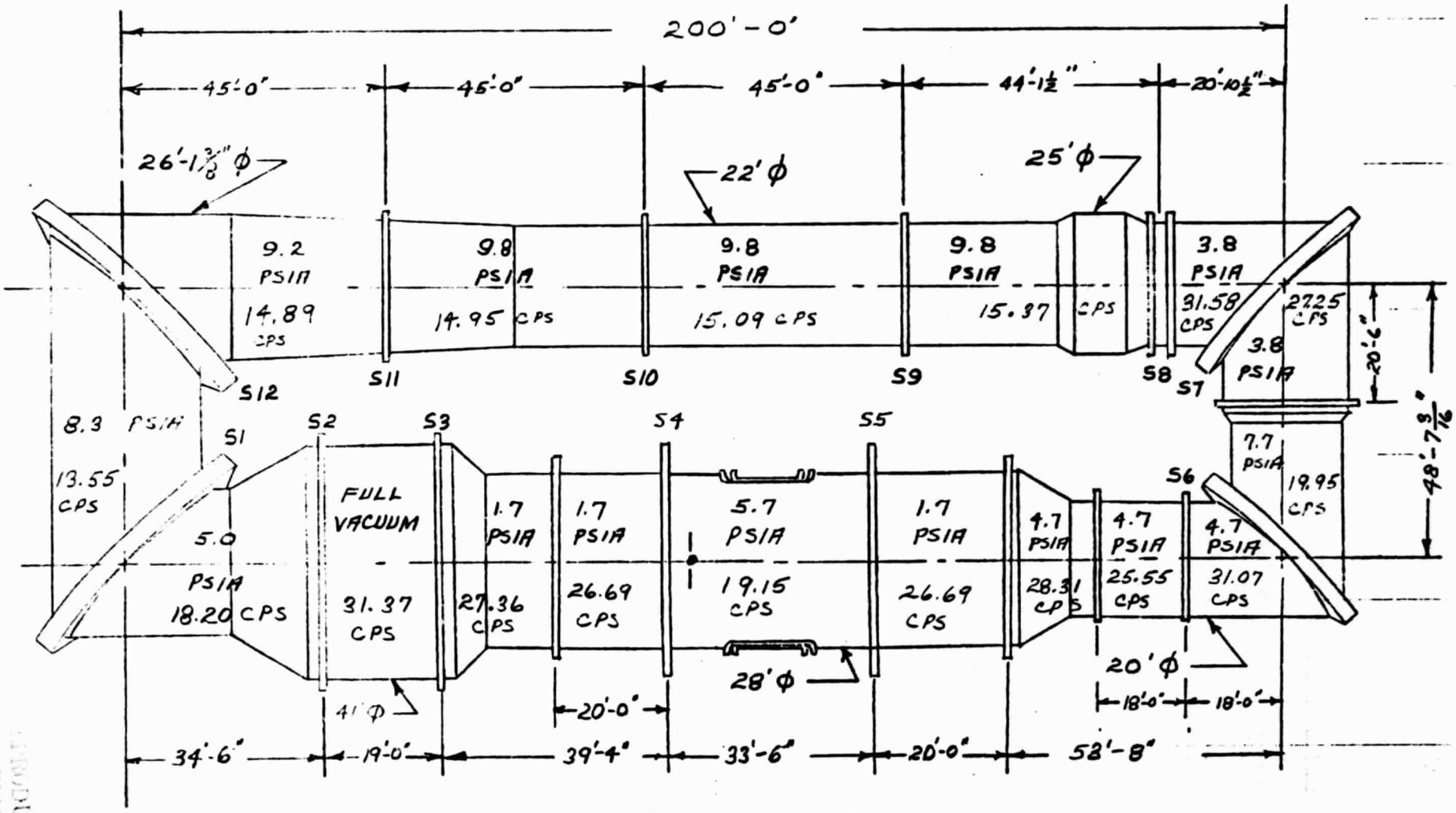

NTF BASIC SHELL

S_A = 25,000 PSI

P_s = 119 PSIG

(OPERATING MODE)

JOB NO

CHKD BY ..... DATE

REPRODUCIBILITY OF THE ORIGINAL PAGE IS POOR

RAMSEY, WILSON 12-16-75

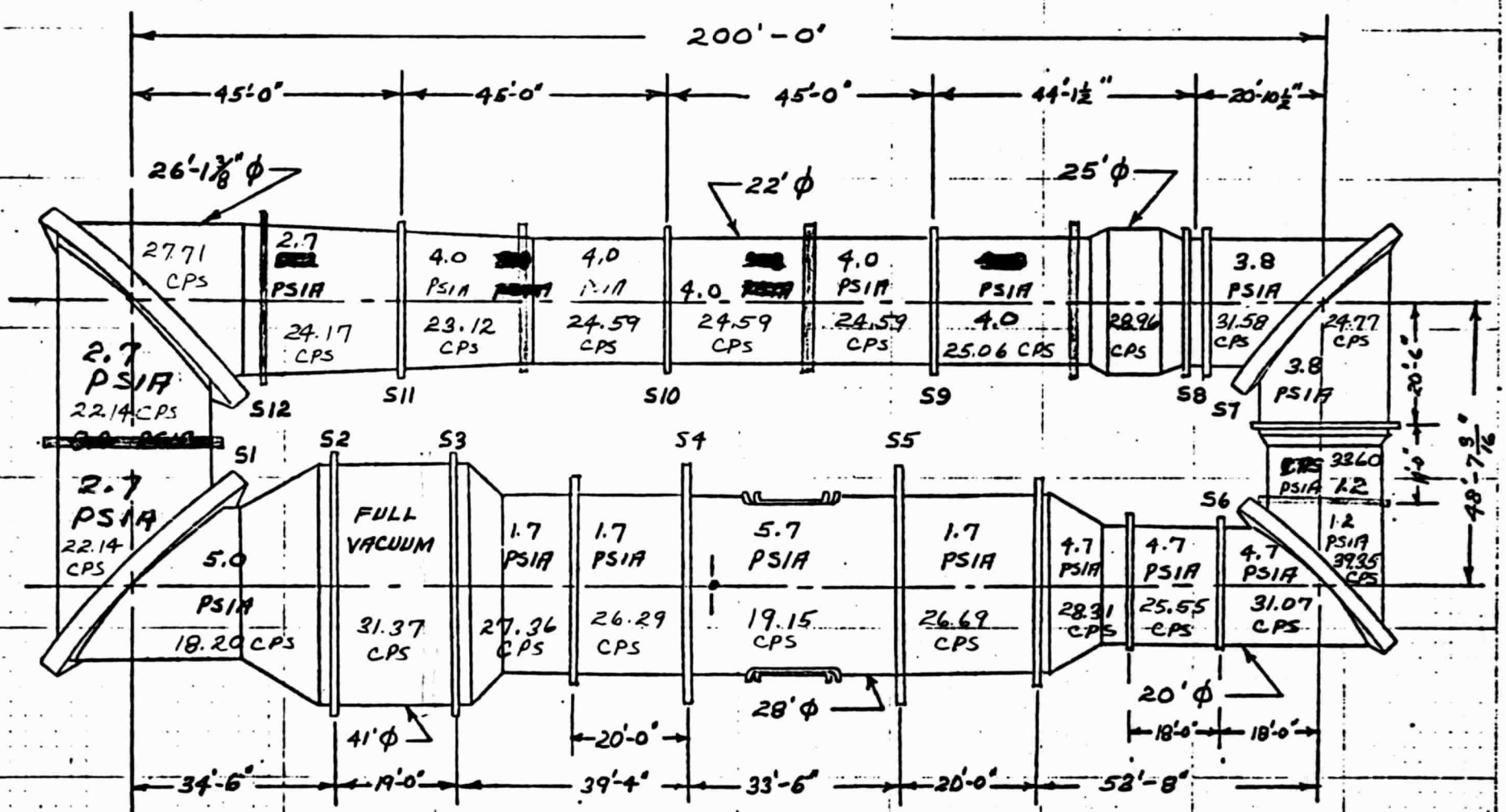

NTF BASIC SHELL

S_A = 25,000 psi

P_s = 119 PSIG

RINGS TO MEET 6.7 PSIA FAILURE MODE

JOB NO. ____ CHKD. BY ____ DATE ____

-17-

RAMSEY, ILSON
12-16-75

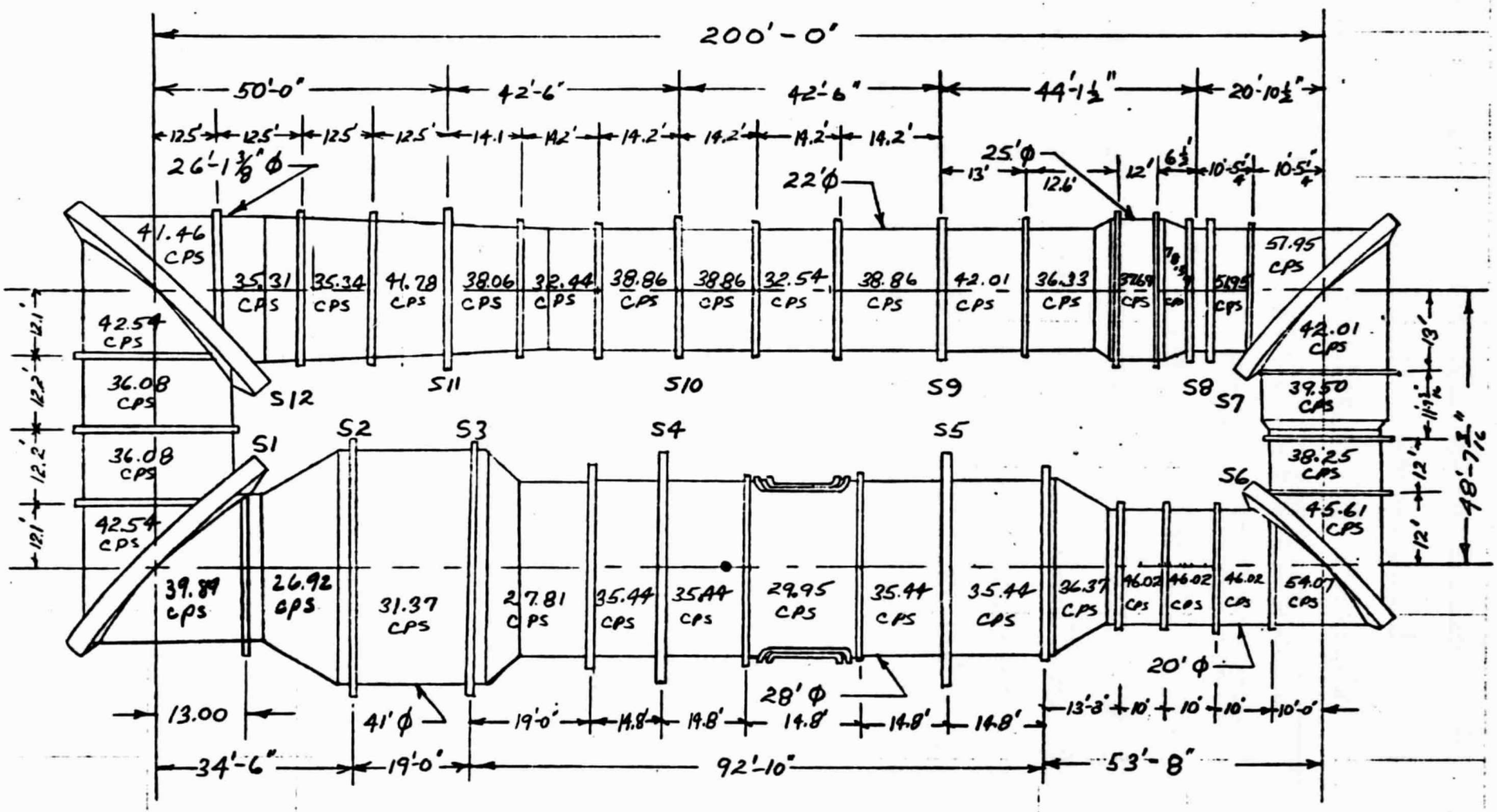

NTF FULL VACUUM SHELL

S_n = 25,000 PSI

P_s = 119 PSIG

SHEET NO ____ OF ____
JOB NO ____
SUBJECT ____
BY ____ DATE ____
CHKD BY ____ DATE ____

-8-

NTF PRESSURE SHELL

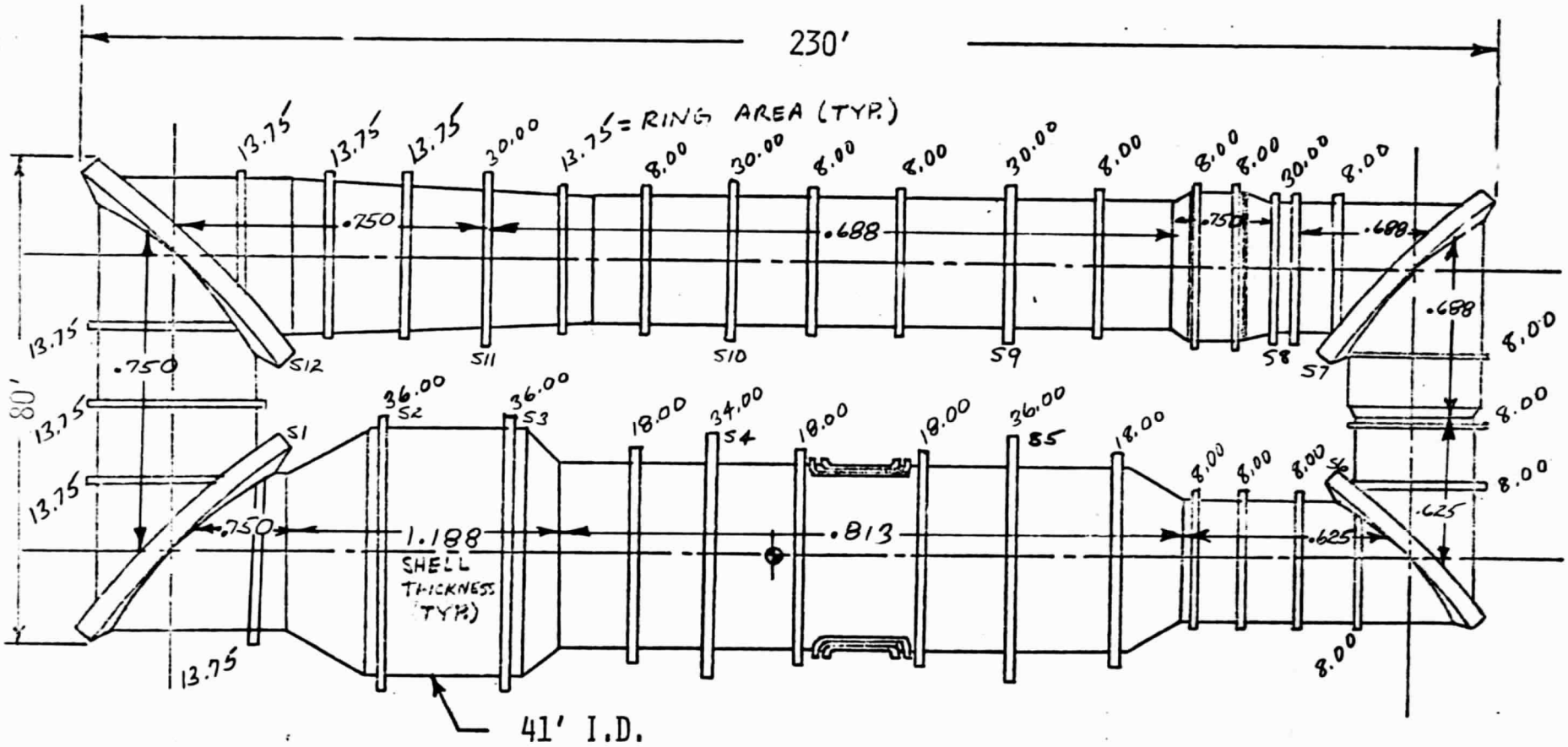

RINGS REQUIRED FOR VIBRATION
(FULL VACUUM CAPABILITY)

Thickness (in)
RING AREA $(in)^2$

REPRODUCIBILITY OF THE
ORIGINAL PAGE IS POOR

The total radial deflection of the shell at any point must include the following:

w - radial deflection due to pressure (previously defined)

δ - radial deflection due to thermal growth (defined herein)

Δ - dead weight deflection of shell (from $f_m = 1/2\sqrt{\frac{g}{\Delta}}$

$x_{static} = \frac{F_o}{K}$ (magnitude of force (in pounds to produce driving frequency f divided by basic stiffness K (from $f_m = 1/2\sqrt{\frac{K}{m}}$)

$$\frac{x_{Dynamic}}{x_{Static}} = D.L.F. = \frac{1}{\sqrt{\left[1-\left(\frac{f}{f_m}\right)^2\right]^2+\left[2\zeta\frac{f}{f_m}\right]^2}} \qquad (6)$$

$\zeta = \frac{c}{c_c}$ = damping factor ≤ 0.03

$x_{Total} = w + \delta + \Delta + \Sigma x_{Dynamic}$

The dynamic deflection must include items in the NTF such as FAN unbalance at top speed, foundation excitation, any dynamic flow. Equation (6) has been programmed on a desk top computer and can be used on an interactive basis to determine the dynamic load factors ($x_{dynamic}/x_{static}$) for any of the forced vibration deflections.

Examples of dynamic flow are "transmission line type flow," noise, and Karman Vortex excitations. The basic air column resonant frequency due to dynamic flow from Messrs. Dixon and Barringer of RFED is attached. The "transmission line equations" can be approximated by

$$f = \frac{49\sqrt{T}}{2L}2^n \qquad \text{where } n = 0, 1, 2, \text{etc.} \qquad (7)$$

Since the temperature can vary from -320°F to +200°F, the driving frequencies in Equation (6) will be from 0-11.7 Hz. The magnitude of the forces associated with these frequencies will be determined from the 8' test results. These results are being interpreted by IRD (Tripp/Techeng). When the Facilities Systems Section in RFED (Osborn/Dixon/Barringer) provide magnitudes of forces associated with Equation (7) dynamic deflections will be computed. The steady state/acoustic frequencies will be included when these are available from SED. Also the results of the foundation dynamics/excitations study by the A/E through Rawles - PED/McNulty - SED will be added when available. The Karman Vortex excitation is felt to be negligible but will be considered.

The static deflection in Equation (6) for the fan region is as follows:

$$x_{static} = \frac{F_o}{K} = \frac{me(2\pi f)^2}{M(2\pi f_m)^2} = \frac{me}{M}\left(\frac{f}{f_m}\right)^2 \qquad (8)$$

When the fan unbalance me in Equation (8) is available, the $x_{Dynamic}$ due to an excitation of the fan blades at peak speed (11.7 Hz) will be computed.

To allow a deflection of 0.135" - the current design limit of the gap between the tip of the blade and inside of shell-insulation-shroud in a cryogenic/pressure run, the thermal growth of the blade would be governed by:

$$\delta_R = (\pm \Delta T)(\alpha)(L) = \pm \Delta T\ (.000013)(47") \qquad (9)$$

and the shell by:

$$\delta_S = (\pm \Delta T)\ \alpha R = \pm \Delta T\ (.0000049)(150") \qquad (10)$$

A summary of different shell/ring temperatures with corresponding gaps is given in Table 3. Since these gaps vary from about 1/5" to 1/3", it appears to be impossible to provide a clearance at 0.135". The addition of a ring directly over the fan essentially halves the pressure deflection and brings the gap from an average of 0.28" to 0.22". The dead weight deflections can be included to the gaps in Table 3. These are shown in Table 4. Also, this analysis does not include blade centrifugal, torsional, and or fabrication tolerances. This will be established by Dr. R. J. Muraca/SED. It should be noted that some tunnels at LaRC have this type of gap (0.135") - 0.050" - cryo, 0.1875" - 8', 1/4" - V/STOL. However, these tunnels do not experience such a varied temperature range.

The shell fabrication tolerance from Structural Engineering Section's previous experience would be on the order of 0.5" to 1" difference between major and minor diameters. However, this elliptical shape could be made up from the 32" of material between the shell and the fan blade tip: 6" thermal insulation, 6" air void, 20" of protective containment shroud which contains acoustic insulation.

DYNAMIC DEFLECTIONS

By choosing an unbalance in the fan blades of 50"-# (SES experience), Equation (8) is

$$x_{Static} = \frac{50}{\text{Wt. of Section}} \left(\frac{f}{f_m} \right)^2 \qquad (11)$$

The dynamic deflections due to blade unbalance at top speed is shown in Table 5.

By choosing a wind speed of 30 M.P.H. the Karman Vortex Equation yields:

$$f = \frac{0.2\,V}{D} = \frac{0.2\left(30\left(\frac{5280}{3600}\right)\right)}{25} \qquad (12)$$

$$f = 0.352 \text{ cps.}$$

The pressure associated with this driving frequency is:

$$p = 0.00256\, C_D V^2$$

$$p = 0.00256\ (1.0)\ (30)^2 = 2.3 \text{ psf.} \qquad (13)$$

The magnitude of forces associated with this pressure for each fan region configuration is:

$$Fo = 2.3 \begin{Bmatrix} 25 * 44 \\ 25 * 28 \\ 25 * 12 \end{Bmatrix} = \begin{Bmatrix} 2530\# \text{ (Oper.)} \\ 1610\# \text{ (Fail.)} \\ 690\# \text{ (Vac.)} \end{Bmatrix} \qquad (15)$$

The Karman Vortex dynamic deflections are shown in Table (5).

The total dynamic deflections computed thus far are the sum of fan and vortex excitions: $\pm$0.0030", operating mode; $\pm$0.00042", failure mode; and $\pm$0.00036", full vacuum.

TABLE 3 - NTF GAPS BETWEEN SHELL - SHROUD AND BLADE TIP AT 119 PSIG

TEMPERATURES		EXPANSION (+) OR CONTRACTION		GAP W/ FULL PRESSURE (INCHES)	
SHELL °F	BLADES °F	SHELL (INCHES)	BLADE (INCHES)	w/o Ring	w/Ring
150 to 110	100 to -240	+0.007	-0.208	0.320	0.262
80 to 40	60 to -240	-0.015	-0.183	0.273	0.215
0 to -40	30 to -240	-0.022	-0.165	0.248	0.190
0 to 20	40 to 200	+0.015	+0.098	0.188	0.130
			Average of Cryo Runs	0.28"	0.22"

TABLE 4 - TABLE 3 INCLUDING DEAD WEIGHT DEFLECTION $\Delta = \frac{g}{4\pi^2 f_m^2}$

LOCATION	Δ = 0.041" OPERATING MODE	Δ = 0.012 FAILURE MODE	Δ = 0.007" FULL VACUUM
TOP	0.279	0.308	0.255
BOT	0.361	0.332	0.269
TOP	0.232	0.261	0.208
BOT	0.314	0.285	0.222
TOP	0.207	0.236	0.183
BOT	0.289	0.260	0.197
TOP	0.077	0.176	0.123
BOT	0.229	0.200	0.137
TOP	0.239	0.268	0.213
BOT	0.321	0.292	0.227

TABLE 5 - DYNAMIC DEFLECTION DUE TO FAN AND VORTEX EXCITATIONS

ADDITIONAL DEFLECTIONS TO TABLE 4	DEFLECTIONS IN INCHES		
	OPERATING MODE	FAILURE MODE	FULL VACUUM
FAN X DYNAMIC	± 0.00066	± 0.00013	± 0.00018
VORTEX X DYNAMIC	± 0.0023	± 0.00029	± 0.00018
$\Sigma X_{DYNAMIC}$	± 0.00296	± 0.00042	± 0.00036