NASA CR-134969
PWA-5418

# EXPERIMENTAL CLEAN COMBUSTOR PROGRAM
## PHASE II
## FINAL REPORT

by

R. Roberts, A. Peduzzi, G. E. Vitti

UNITED TECHNOLOGIES CORPORATION
PRATT & WHITNEY AIRCRAFT GROUP
COMMERCIAL PRODUCTS DIVISION

November 1976

Prepared for

NATIONAL AERONAUTICS AND SPACE ADMINISTRATION

NASA Lewis Research Center
Contract NAS3-18544

(NASA-CR-134969) EXPERIMENTAL CLEAN COMBUSTOR PROGRAM, PHASE 2 Final Report (Pratt and Whitney Aircraft) 189 p HC A09/MF A01 CSCL 21E
N77-13059
Unclas
G3/07 50948

1. Report No.
CR-134969

2. Government Accession No.

3. Recipient's Catalog No.

4. Title and Subtitle
EXPERIMENTAL CLEAN COMBUSTOR PROGRAM, PHASE II

5. Report Date
November 1976

6. Performing Organization Code

7. Author(s)
R. Roberts, A. Peduzzi, G. E. Vitti

8. Performing Organization Report No.
PWA-5418

9. Performing Organization Name and Address
United Technologies Corporation
Pratt & Whitney Aircraft Group
Commercial Products Division
East Hartford, Connecticut 06108

10. Work Unit No.

11. Contract or Grant No.
NAS3-18544

12. Sponsoring Agency Name and Address
National Aeronautics and Space Administration
Lewis Research Center
21000 Brookpark Road, Cleveland, Ohio 44135

13. Type of Report and Period Covered
Contract Report

14. Sponsoring Agency Code

15. Supplementary Notes

16. Abstract

Primary objectives of the NASA/Pratt & Whitney Aircraft Experimental Clean Combustor Program are the generation of combustor pollution reduction technology for commercial CTOL engines and demonstration of this technology in a full-scale JT9D engine in 1976. Phase II consisted of component rig refinement testing of the two best Phase I combustor concepts. These concepts are the Vorbix combustor, continued from Phase I, and a Hybrid combustor which combines the pilot zone of the Staged Premix combustor and the main zone of the Swirl-Can combustor. Both Phase II concepts significantly reduced all pollutant emissions relative to the JT9D-7 engine combustor. However, neither concept met all program goals. The Hybrid combustor met pollution goals for unburned hydrocarbons and carbon monoxide but did not achieve the oxides of nitrogen goal. This combustor had significant performance deficiencies. The Vorbix combustor met goals for unburned hydrocarbons and oxides of nitrogen but did not achieve the carbon monoxide goal. Performance of the Vorbix combustor approached the engine requirements. On the basis of these results, the Vorbix combustor was selected for the Phase III engine demonstration program.

A control study was conducted as part of the Phase II effort to establish fuel control requirements imposed by the low-emission combustor concepts and to identify conceptual control system designs. Concurrent efforts were also completed on two addendums: an Alternate Fuels Addendum and a Combustion Noise Addendum.

17. Key Words (Suggested by Author(s))
Main Burner Emissions
JT9D Combustor
Emission Standards
CTOL Emissions

18. Distribution Statement

19. Security Classif. (of this report)
Unclassified

20. Security Classif. (of this page)
Unclassified

21. No. of Pages
187

22. Price*

* For sale by the National Technical Information Service, Springfield, Virginia 22151

## FOREWORD

This document describes the work conducted and completed by the Commercial Products Division, Pratt & Whitney Aircraft Group of United Technologies Corporation during Phase II of the Experimental Clean Combustor Program. This final report was prepared for the National Aeronautics and Space Administration Lewis Research Center in compliance with the requirements of Contract NAS3-18544.

The authors of this report wish to acknowledge the guidance and assistance of Mr. Richard Niedzwiecki, NASA Project Manager of the Experimental Clean Combustor Program and Mr. J. R. Baker of the Advanced Controls Group of Pratt & Whitney Aircraft.

# TABLE OF CONTENTS

| Section | Title | Page |
|---|---|---|
| I | EXPERIMENTAL CLEAN COMBUSTOR PROGRAM DESCRIPTION | 4 |
| | A. General Description of Overall Program | 4 |
| | B. Program Plan | 4 |
| | 1. Phase I Program | 4 |
| | 2. Phase II Program | 5 |
| | 3. Phase III Program | 5 |
| | C. Program Schedule | 6 |
| | D. Program Goals | 6 |
| | 1. Pollution Goals | 6 |
| | 2. Performance Goals | |
| II | EQUIPMENT AND EXPERIMENTAL PROCEDURES | 9 |
| | A. Reference Engine and Combustor | 9 |
| | 1. Reference Engine Description | 9 |
| | 2. Reference Combustor Description | 10 |
| | 3. Reference Engine Combustor Pollution Levels | 12 |
| | B. Test Combustor Concepts and Configurations | 13 |
| | 1. Hybrid Combustor | 13 |
| | 2. Vorbix Combustor | 19 |
| | C. Test Facilities and Equipment | 28 |
| | 1. Test Facilities | 28 |
| | 2. Test Rigs | 31 |
| | D. Test Conditions | 33 |
| | 1. High-Pressure Test Facility | 33 |
| | 2. Altitude Test Facility | 35 |
| | E. Data Analysis Procedures | 36 |
| | 1. Performance Data | 36 |
| | 2. Emission Data | 37 |
| III | PHASE II PROGRAM RESULTS | 41 |
| | A. Introduction | 41 |
| | B. Hybrid Combustor | 41 |
| | 1. Emission Results | 41 |
| | 2. Performance Results | 49 |
| | C. Vorbix Combustor | 55 |
| | 1. Emission Results | 55 |
| | 2. Performance Results | 67 |
| | D. Combustor Status Assessment | 74 |
| | E. Phase III Engine Design | 77 |
| IV | FUEL CONTROL DESIGN STUDY | 79 |
| | A. Introduction | 79 |
| | B. Fuel Control Design Requirements | 79 |

PRECEDING PAGE BLANK NOT FILMED

TABLE OF CONTENTS (Cont'd)

| Section | Title | Page |
|---|---|---|
| | C. Fuel Control Breadboard Design for Phase III Engine Testing | 81 |
| V | CONCLUDING REMARKS | 83 |
| Appendix A | Combustor Configurations | 85 |
| Appendix B | Experimental Test Data | 109 |
| Appendix C | Fuel Control Design Study | 133 |
| Appendix D | Nomenclature | 173 |
| Appendix E | References | 175 |
| Distribution List | | 177 |

## LIST OF ILLUSTRATIONS

| Figure | Title | Page |
|---|---|---|
| 1 | NASA/Pratt & Whitney Aircraft Experimental Clean Combustor Program Schedule | 6 |
| 2 | Cross-Sectional Schematic of the JT9D-7 Reference Engine | 9 |
| 3 | Cross-Sectional Schematic of the JT9D-7 Reference Combustor | 10 |
| 4 | Reference Combustor Exit Average Radial Temperature Profile | 11 |
| 5 | Cross-Sectional Side View of Hybrid Combustor | 13 |
| 6 | Exterior View of Hybrid Combustor | 14 |
| 7 | Front-End View of Hybrid Combustor | 14 |
| 8 | Pressure Loss Profiles Showing Improvement at Main Burning Zone Entrance Plane Obtained for Phase II Hybrid Combustor | 15 |
| 9 | Swirl Vorbix Combustor Design | 19 |
| 10 | Exterior View of Vorbix Combustor Configuration S11 | 20 |
| 11 | Front-End View of Vorbix Combustor Configuration S11 | 20 |
| 12 | Designs of Baseline Swirl Vorbix Combustor and Combustor with Increased Pilot Zone Volume | 24 |
| 13 | Swirl Vorbix Combustor Pilot Burner Front-End Designs with Pressure Atomizing Fuel Injector and Low Pressure Drop Aerating Fuel Injector | 25 |
| 14 | Swirl Vorbix Combustor Main Zone Swirler Orientations Evaluated in Phase II | 26 |
| 15 | Swirl Vorbix Combustor Design with Premixing Tubes | 27 |
| 16 | Detailed View of Combustor Exit Annular Traversing Rake | 29 |
| 17 | Combustor Exit Annular Traversing Rake Head Showing Disassembly of Thermocouple Head From Gas Sampling Head | 30 |
| 18 | Schematic Diagram of Test Rig Installed in the Test Facility | 31 |

## LIST OF ILLUSTRATIONS (Cont'd)

| Figure | Title | Page |
|---|---|---|
| 19 | Combustor Rig Outer Case Showing Sectioning to Improve Accessibility | 32 |
| 20 | Vorbix Combustor Design Showing Rear Outer Seal Arrangement | 33 |
| 21 | JT9D Relight Envelope | 35 |
| 22 | Combustor Carbon Monoxide Emission Levels as a Function of Fuel-Air Ratio at Idle Conditions with Bleed | 43 |
| 23 | Circumferential Exit Temperature Patterns for Hybrid Combustor Configuration H1 at Idle Conditions | 50 |
| 24 | Circumferential Exit Temperature Patterns for Hybrid Combustor Configuration H2 at Sea0Level Take-Off Conditions with Fuel-Air Ratio of 0.616 | 51 |
| 25 | Radial Exit Temperature for Hybrid Combustor Configuration H2 at Idle Conditions | 53 |
| 26 | Radial Exit Temperature Pattern for Hybrid Combustor Configuration H2 at Sea-Level Take-Off Conditions with Overall Fuel-Air Ratio of 0.0160 and Pilot Zone Fuel-Air Ratio of 0.0052 | |
| 27 | Minimum Pressure Blowout Test Results for Hybrid Combustor Shown on JT9D-7 Altitude Relight Envelope | 55 |
| 28 | Relationship Between Emissions of Oxides of Nitrogen and Efficiency for Vorbix Combustor Configurations S23 and S25 | 60 |
| 29 | Efficiency Characteristics for Vorbix Combustor Configuration S25 as a Function of Pilot Zone Fuel-Air Ratio | 66 |
| 30 | Circumferential Exit Temperature Patterns for Vorbix Combustor Configuration S20 at Idle Conditions | 68 |
| 31 | Circumferential Exit Temperature Patterns for Vorbix Combustor Configuration S20 at Sea-Level Take-Off Conditions with Fuel-Air Ratio of 0.016 | 69 |
| 32 | Radial Exit Temperature Pattern for Vorbix Combustor Configuration S16 at Idle Conditions | 70 |

## LIST OF ILLUSTRATIONS (Cont'd)

| Figure | Title | Page |
|---|---|---|
| 33 | Radial Exit Temperature Patterns for Selected Vorbix Combustor Configurations at Sea-Level Take-Off Conditions | 71 |
| 34 | Altitude Stability and Relight Characteristics of Vorbix Combustor Configurations S19 and S20 Shown on JT9D-7 Altitude Relight Envelope | 72 |
| 35 | Altitude Stability and Relight Characteristics of Vorbix Combustor Configurations S24 and S25 with Modified Pilot Swirler | 73 |
| 36 | Altitude Stability and Relight Characteristics of Vorbix Combustor Configuration S24 with Increased Pressure Drop Pilot Fuel Nozzles | 73 |
| 37 | Emission Characteristics for Oxides of Nitrogen Versus Percent Engine Thrust | 74 |
| 38 | Emission Characteristics for Carbon Monoxide Versus Percent Engine Thrust | 75 |
| 39 | Emission Characteristics for Total Unburned Hydrocarbons Versus Percent Engine Thrust | 75 |
| 40 | Preliminary Design of Phase III Vorbix Combustor for Demonstration Engine Testing | 78 |
| 41 | JT9D Engine Combustor Pressure and Fuel Flow Envelopes | 80 |
| 42 | Fuel Scheduling Requirements for Two-Stage Vorbix Combustor Based on Phase II Experimental Clean Combustor Results | 80 |
| 43 | Preliminary Design of Breadboard Fuel Control for Phase III Engine Testing | 81 |

## LIST OF TABLES

| Table | Title | Page |
|---|---|---|
| I | Pollution Goals and Current JT9D-7 Levels | 7 |
| II | ECCP Performance Goals | 8 |
| III | Key Specifications of the JT9D-7 Engine | 10 |
| IV | Key Operating Parameters of the JT9D-7 Reference Combustor | 11 |
| V | Representative JT9D-7 Production Engine Emission Levels and Experimental Clean Combustor Program Goals | 12 |
| VI | Hybrid Combustor Configuration Summary | 16 |
| VII | Airflow Distributions for Hybrid Combustor Configurations | 17 |
| VIII | Vorbix Combustor Configuration Summary | 22 |
| IX | Airflow Distributions for Vorbix Combustor Configurations | 23 |
| X | JT9D-7 Reference Engine Operating Conditions and Experimental Clean Combustor Sector Rig Operating Conditions | 34 |
| XI | Summary of Reported Combustor Performance Parameters | 36 |
| XII | Definition of EPAP Conditions and EPAP Coefficients for JT9D-7 Engine | 40 |
| XIII | Hybrid Combustor Emissions At Idle Conditions | 42 |
| XIV | Hybrid Combustor Emissions At Sea-Level Take-Off Conditions | 44 |
| XV | Hybrid Combustor Emissions At Approach Conditions | 45 |
| XVI | Hybrid Combustor Emissions At Climb Conditions | 46 |
| XVII | Hybrid Combustor Emissions At Cruise Conditions | 47 |
| XVIII | Hybrid Combustor EPA Parameter Emissions Results | 48 |
| XIX | Landing-Takeoff Cycle Point Emission Indices for Hybrid Combustor | 48 |
| XX | Summary of Pressure Loss Test Results for Hybrid Combustor | 49 |

# LIST OF TABLES (Cont'd)

| Table | Title | Page |
|---|---|---|
| XXI | Summary of Hybrid Combustor Exit Temperature Pattern Factor Results | 52 |
| XXII | Summary of Hybrid Combustor Idle Lean Blowout Test Results | 54 |
| XXIII | Vorbix Combustor Emissions At Idle Conditions | 56 |
| XXIV | Vorbix Combustor Emissions At Sea-Level Take-Off Conditions | 58 |
| XXV | Vorbix Combustor Emissions At Approach Conditions | 61 |
| XXVI | Vorbix Combustor Emissions At Climb Conditions | 62 |
| XXVII | Vorbix Combustor Emissions At Cruise Conditions | 63 |
| XXVIII | Vorbix Combustor EPA Parameter Emissions Results | 64 |
| XXIX | Landing-Takeoff Cycle Point Emission Indices for Vorbix Combustor | 65 |
| XXX | Summary of Pressure Loss Test Results for Vorbix Combustor | 67 |
| XXXI | Summary of Vorbix Combustor Exit Temperature Patterns Factor Results | 70 |
| XXXII | Summary of Vorbix Combustor Idle Lean Blowout Test Results | 71 |
| XXIII | Hybrid Combustor Performance Results | 76 |
| XXXIV | Vorbix Combustor Performance Results | 76 |
| XXXV | Steady State Performance/Emission Test Points | 84 |

# SUMMARY

The Experimental Clean Combustor Program is directed toward the development and demonstration of technology for reducing pollutant emissions for application to both current and future gas turbine engine combustors. The program is being conducted in three phases. Phase I involved experimental rig screening of combustor concepts to identify the best approaches for reducing emission levels. Phase II, which is the subject of this report, consisted of evaluation and refinement of the best two combustor concepts identified in Phase I. Emphasis was placed on documentation of emission characteristics over the full range of operating conditions and development of satisfactory combustor performance. A fuel control design study was conducted to establish fuel management requirements for two-stage combustors. Phase III will consist of full-scale engine demonstration tests of the best combustor selected from Phase II.

Program gaseous pollution goals are expressed in two ways. as emission indices at the engine operating mode where peak levels of each pollutant are generated, and as integrated EPA parameter values. Compared with the current production JT9D-7 engine, the attainment of these goals involves significant pollution reductions by factors of 2½ to 5½ on an emission index basis. Program performance goals consist of maintaining or improving current production combustor operating parameters.

Combustor testing in Phase II was conducted in the same 90-degree sector rig used for Phase I. The sector rig simulates the JT9D engine combustor envelope and internal flowpath. Tests were conducted at conditions that simulated JT9D-7 engine operating conditions at idle, approach, climb, sea-level take-off, and cruise. The test rig matched the engine conditions at idle, and duplicated all parameters except inlet pressure and airflow at the higher power levels. The emissions data were corrected to account for differences between the rig operating conditions and actual engine conditions. Stability and relight capability at simulated altitude conditions were also documented.

The Hybrid and Vorbix combustor concepts were selected for refinement in Phase II. The Hybrid combustor was created by merging the pilot zone of the Phase I Staged Premix combustor with a main zone derived from the Swirl-Can combustor. The Vorbix concept was continued from Phase I with evolutionary changes to the pilot and main burning zone dimensions.

Although none of the Hybrid combustors met all of the EPA parameter goals, substantial reductions of all pollutants were achieved. Oxides of nitrogen levels were significantly below the JT9D-7 production engine levels, and surpassed the program goal for two configurations. Carbon monoxide and total unburned hydrocarbon levels were generally close to or surpassed goal levels with only the pilot zone fueled at the approach condition. Smoke levels were well below goal levels. Best results were achieved with configuration H 7 where EPAP values of 3.4, 3.7, and 0.7 for oxides of nitrogen, carbon monoxide, and total unburned hydrocarbons, respectively, were obtained.

The most significant pollutant problem uncovered with the Hybrid combustor occurred at the approach condition. At this operating condition, the Hybrid was unable to operate with high combustion efficiency (and accompanying low pollutant levels) with the pilot and main zones fully fueled. With both zones fully fueled, combustion efficiencies were below 91 percent. Some configurations exhibited combustion efficiency near 100 percent with all approach fuel supplied to either the pilot or to the main zone. Selected configurations were tested with fuel supplied to only a portion of the main injectors, and, in all cases, efficiency improved as the number of main nozzles fueled was reduced. Implementation of any of the partial fuel staging techniques is undesirable since it imposes additional demands on the engine fuel control, involves ignition during a flight mode. and creates additional combustor exit temperature distribution problems.

None of the Vorbix combustor configurations met the EPA parameter goals for all pollutants. However, the Vorbix combustors exhibited emission levels for oxides of nitrogen that were significantly below the current JT9D production combustor level, in some cases surpassing the program goals. Unburned hydrocarbon emission levels and smoke were also low, generally exceeding the goal levels. None of the Vorbix combustors met the carbon monoxide emissions goal, although some configurations exhibited 25 percent reductions from the production combustor level. Best results were achieved with configuration S25 where EPAP values of 2.2, 6.5, and 0.3 for oxides of nitrogen, carbon monoxide, and total unburned hydrocarbons, respectively, were obtained. The high carbon monoxide EPAP levels recorded with the Vorbix combustor were generally due to the contribution at the idle test condition. Attempts to reduce carbon monoxide through pilot zone modifications including airflow redistributions, fuel spray modification, and volume modifications were ineffective.

The Vorbix combustor appeared to offer the greatest potential for meeting the performance goals without excessive compromise of the emission levels. The Hybrid combustor was deficient in both idle stability and altitude relight capability. On the basis of the pollution and performance results, the Vorbix combustor was selected for engine demonstration testing in Phase III.

Work was also conducted on two addendums to the Phase II program, an Alternate Fuels Addendum and a Combustor Noise Addendum. Details and results of the fuel program are included in NASA Report CR-134970. Results of the combustor noise program are described in NASA Report CR-135106.

# INTRODUCTION

This report describes the low pollution combustor concepts investigated and the combustor component test results obtained in Phase II of the NASA/Pratt & Whitney Aircraft Experimental Clean Combustor Program (ECCP). Also described are the program objectives, plan, schedule, pollution and performance goals, and current and future program efforts emphasizing demonstration tests of a low pollution combustor installed in a full-scale JT9D engine.

The concern with air quality in the vicinity of airports has led to the issuance of emission standards by the U. S. Environmental Protection Agency for aircraft engines manufactured after January 1979 (Reference 1). These standards limit the emission of carbon monoxide (CO), total unburned hydrocarbons (THC), oxides of nitrogen (NOx), and smoke at altitudes under 914 m. Recently introduced gas turbine engines, such as the JT9D family, already meet the requirement for producing no visible smoke. However, compliance with the standards for the gaseous pollutants will require substantial improvements relative to current engine emission levels.

The rudiments of pollution control are understood. However, when incorporating pollution reduction features, aircraft combustors must also accommodate a diversified range of factors that greatly add to the development complexity of a practical low-emission combustor system. Physical constraints on fuel vaporization, turbulent mixing rate, dilution air addition, and residence time impose absolute limits on the combustion process. Performance requirements for uniform exit temperature distribution, combustion stability, relight capability, durability, and operational safety must also be considered. Furthermore, it is desirable to maintain component weight, costs, and mechanical complexity at a minimum.

Specific combustor-engine designs have not yet demonstrated the required pollutant reductions without compromising other performance parameters, indicating the need for additional technology. In response to this need, the National Aeronautics and Space Administration initiated the Experimental Clean Combustor Program in December 1972.

The first two phases, comprising the rig-test portion of the program, have been completed. The results of Phase I were reported in NASA CR-134736. The results of the Phase II refinement and optimization testing are reported in this document.

A summary of the program plan and goals of the Experimental Clean Combustor Program is provided in Chapter I. Chapter II contains a description of the reference engine (JT9D-7) and combustor used as a basis for the program work, a description of the combustor design concepts tested in Phase II, and a description of the test and analysis procedures. Chapter III presents the detailed emissions and performance results for the Phase II combustors. Chapter IV discusses the fuel control design study in which the control system implications of two-stage combustor concepts were explored. The relation of the completed work to the work remaining in Phase III is discussed as a part of the concluding remarks contained in Chapter V. Detailed descriptions of the Phase II combustor configurations, detailed data tables, and control concept schematics are contained in Appendices A through C, respectively. A table of nomenclature is presented in Appendix D, and the references in Appendix E.

# CHAPTER I —

# EXPERIMENTAL CLEAN COMBUSTOR PROGRAM DESCRIPTION

## A. GENERAL DESCRIPTION OF OVERALL PROGRAM

The Experimental Clean Combustor Program is a multiyear effort that was initiated in December 1972 and is scheduled for completion in late 1976. The program is directed towards two primary objectives:

1. The generation of the technology required to develop advanced commercial CTOL aircraft engines with lower exhaust pollutant emissions than those of current technology engines, and

2. The demonstration of the emission reductions and acceptable performance in a full-scale engine in 1976.

The program specifically addresses the development of a combustor with low emission characteristics for the Pratt & Whitney Aircraft JT9D-7 engine. However, the technology developed during the program will be translatable to other combustors, either for commercial or military applications. The technology will also provide the foundation for developing further refinements and for identifying other avenues for continued exploration and experimental research.

## B. PROGRAM PLAN

The program is divided into three phases which provide a step-by-step approach for developing the technology required for reducing emissions. These phases are described below:

### 1. PHASE I PROGRAM

Phase I was directed toward identifying promising concepts and establishing the design trends in sufficient detail to provide a firm basis for refinement of the more promising concepts in Phase II. Three concepts were tested in a 90-degree sector component rig at simulated engine idle and sea-level take-off operating conditions. These were a Swirl-Can combustor concept, a Staged Premix combustor concept, and a Swirl Vorbix combustor concept. Thirty-two configurations were evaluated.

The lowest emissions at idle engine operating conditions were obtained with the Staged Premix combustor. The carbon monoxide emission index level was 55 percent below the goal and the total hydrocarbon emission index level was 75 percent below the goal. The Swirl Vorbix combustor approached but did not meet the goals, while the Swirl-Can combustor exhibited significantly higher emissions that were close to the levels produced by current production JT9D-7 combustors.

At sea-level take-off engine conditions, none of the combustors met the goal for oxides of nitrogen, although some combustor configurations provided significant improvements relative to the current production JT9D-7 combustor. The best results were obtained with the Swirl

Vorbix and the Swirl-Can combustors, both of which provided approximately 60-percent lower emissions of nitrogen oxides than the current production JT9D-7 combustor. All three combustor concepts met the smoke goal.

In addition to the basic Phase I program, seventeen combustor configurations were evaluated at simulated supersonic cruise conditions, and a low-emissions conceptual design was evolved. A combustion noise study was also conducted to document the noise characteristics of the three low emission combustor concepts and to provide a data base for correlating combustor noise levels with performance parameters.

Detailed results of the basic program including the studies for advanced supersonic technology applications are presented in NASA Report CR-134736. The results of the noise studies are presented in NASA Report CR-134820.

## 2. PHASE II PROGRAM

The Phase II program involved refinement and optimization of the most promising concepts identified in Phase I. The concepts selected for Phase II were the Vorbix combustor and a Hybrid combustor created by merging the pilot zone of the Staged Premix combustor with a main burning zone derived from the Swirl-Can combustor. More comprehensive sector rig testing simulating the full range of engine operating conditions was conducted to fully document pollutant emission characteristics, to identify previously undetected problem areas, and to assess combustor performance. After initial testing, the program was reduced to the Vorbix combustor concept and the remaining test effort was devoted to development of performance characteristics in preparation for the Phase III engine demonstration tests. Details of the Phase II work are contained in the following chapters of this report.

Work was also conducted on two addendums to the Phase II program, an Alternate Fuels Addendum and a Combustion Noise Addendum. Results of the Alternate Fuels Addendum are contained in NASA Report CR-134970. The results of the Combustion Noise Addendum are contained in NASA Report CR-135106.

## 3. PHASE III PROGRAM

The objective of the Phase III program, currently in progress, is to substantiate the pollution reduction technology developed in Phases I and II in an actual engine environment. Phase III provides evaluation of engine-quality, annular combustor hardware at full engine pressure levels as well as assessment of combustor and fuel control system performance under transient operating conditions of acceleration and deceleration which cannot be simulated in a component rig. The work will culminate with the testing of the Vorbix combustor concept in a JT9D engine during 1976.

## C. PROGRAM SCHEDULE

The program schedule for the Experimental Clean Combustor Program is shown in Figure 1. Phase I was an eighteen-month effort which has been completed. Phase II was a nineteen-month effort which has also been completed. Phase III, currently in progress, will be a sixteen month effort and is scheduled for completion during 1976.

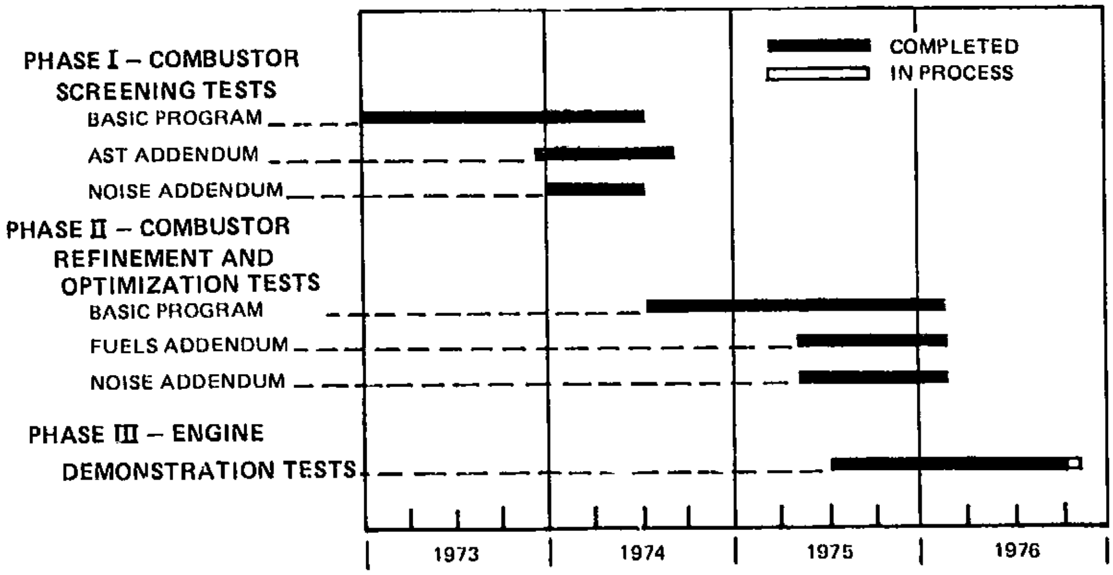

*Figure 1 NASA/Pratt & Whitney Aircraft Experimental Clean Combustor Program Schedule*

## D. PROGRAM GOALS

Program goals were defined for both pollutant emissions and combustor aero-thermodynamic performance. The goals for gaseous pollutants represent the primary program focus. The performance and smoke goals were set to require maintenance of current JT9D-7 combustor performance levels, and are imposed to ensure that the reductions in pollutant emissions are not achieved at the expense of performance or smoke levels. All goals are predicated on the use of commercial grade Jet-A aviation turbine fuel.

### 1. POLLUTION GOALS

The pollutant emission goals are summarized in Table I. The gaseous pollutant emissions goals are expressed in two ways: as emission indices at the engine operating mode where the peak levels of each pollutant are generated, and as integrated EPA parameter values. Emission index is defined as the ratio of grams of pollutant formed per kilogram of fuel consumed. The EPA parameter, Reference 1, is a thrust-normalized measure of the total mass of pollutant emitted in a prescribed landing and take-off cycle. As shown by a comparison of the goals with the current production JT9D-7 engine, the attainment of these goals involves significant pollutant reductions by factors of 2½ to 5½ on an emission index basis.

## TABLE I

## POLLUTION GOALS AND CURRENT JT9D-7 LEVELS

A. Peak Emission Goals

| Engine Mode | Carbon Monoxide (g/kg fuel) |  | Total Unburned Hydrocarbons (g/kg fuel) |  | Oxides of Nitrogen (g/kg fuel) |  | Smoke (SAE Smoke Number) |  |
|---|---|---|---|---|---|---|---|---|
|  | Goal | JT9D-7 | Goal | JT9D-7 | Goal | JT9D-7 | Goal | JT9D-7 |
| Ground Idle with Compressor Air Bleed | 20 | – | 4 | – | – | – | – | – |
| Ground Idle without Compressor Air Bleed | 20 | 46.7 | 4 | 21.6 | – | – | – | – |
| Sea-Level Static Take-Off | – | – | – | – | 10 | 39.9 | 15 | 4 |

B. EPA Parameter Goals (lbm. pollutant/1000 lbf. thrust-hr/landing take-off cycle)

| Pollutant | 1979 EPA Standard (Class T2) | Current JT9D-7 Engine Status |
|---|---|---|
| Oxides of Nitrogen | 3.0 | 5.9 |
| Carbon Monoxide | 4.3 | 8.5 |
| Total Unburned Hydrocarbons | 0.8 | 3.9 |

Notes: Current JT9D-7 levels are based on initial production engine emissions results with combustor configuration EC 289386 adjusted to standard day conditions with specific humidity of 0.0063.

All oxides of nitrogen reported as $NO_2$ equivalent.

Two ground idle operating points are defined in Table I, corresponding to engine operation with and without fifteenth-stage compressor bleed air extraction to meet airframe requirements. Current Pratt & Whitney Aircraft experimental engine and production acceptance tests are conducted without extraction of bleed air. However, engines in the field operate with varying amounts of bleed extraction. Owing to the particular design of the JT9D fuel control, compressor bleed extraction results in a drop in high-pressure compressor rotor speed, and corresponding changes in combustor inlet pressure, temperature, and fuel-air ratio. Since the basis for EPA Emission Standard compliance testing is presently open to interpretation, both conditions were included in the test program.

## 2. PERFORMANCE GOALS

The Experimental Clean Combustor Program performance goals are summarized in Table II. These goals do not represent an appreciable departure from current JT9D-7 operating levels except for the pattern factor and the combustion efficiency at idle. The combustor exit temperature pattern factor represents a level that is difficult to achieve on a production basis. Also required for satisfactory performance is the achievement of a radial average temperature profile at the combustor exit that is substantially equivalent to that produced by the current production JT9D-7 combustor.

TABLE II

ECCP PERFORMANCE GOALS

| | |
|---|---|
| Total Pressure Loss (%) | 6 |
| Exit Temperature Pattern Factor | 0.25 at take-off |
| Combustor Efficiency (%) | 99 or better at all operating conditions |
| Lean Blowout Fuel-Air Ratio | 0.004 ± 0.001 |
| Altitude Relight Capability | |
| Altitude (m) | 9144 |
| Flight Mach Number | 0.5 – 0.8 |

An additional performance goal is the requirement that the combustor mechanical durability be consistent with long-term engine operation, equivalent to the current JT9D-7 combustor. This goal encompasses structural integrity, liner coolant air level, liner pressure drop, fuel system metal temperature, etc. In addition, the rear combustor liner pressure drop must not be less than 1.8 percent to ensure that the coolant flow requirements for the first turbine inlet guide vane will be met.

# CHAPTER II

# EQUIPMENT AND EXPERIMENTAL PROCEDURES

## A. REFERENCE ENGINE AND COMBUSTOR

### 1. REFERENCE ENGINE DESCRIPTION

The JT9D-7 engine was selected as a reference for the NASA/Pratt & Whitney Aircraft Experimental Clean Combustor Program. This engine is the current production version of the basic JT9D engine model, which was designed and developed by Pratt & Whitney Aircraft. Since its introduction into commercial service, this engine has acquired widespread use as the powerplant for both the Boeing 747 and the Douglas DC-10-40 aircraft.

The JT9D engine is an advanced, dual-spool, axial-flow turbofan engine designed with a high overall compression ratio and a high bypass ratio. The mechanical configuration is shown in Figure 2. The engine consists of five major modules: a fan and low-pressure compressor module, a high-pressure compressor module, a combustor module, a high-pressure turbine module, and a low-pressure turbine module. The low-pressure spool consists of a single-stage fan and a three-stage low-pressure compressor driven by a four-stage low-pressure turbine. The high-pressure spool consists of an eleven-stage high-pressure compressor driven by a two-stage high-pressure turbine. The accessory gearbox is driven through a towershaft located between the low- and high-pressure compressors. Selected key specifications for the JT9D-7 engine are listed in Table III.

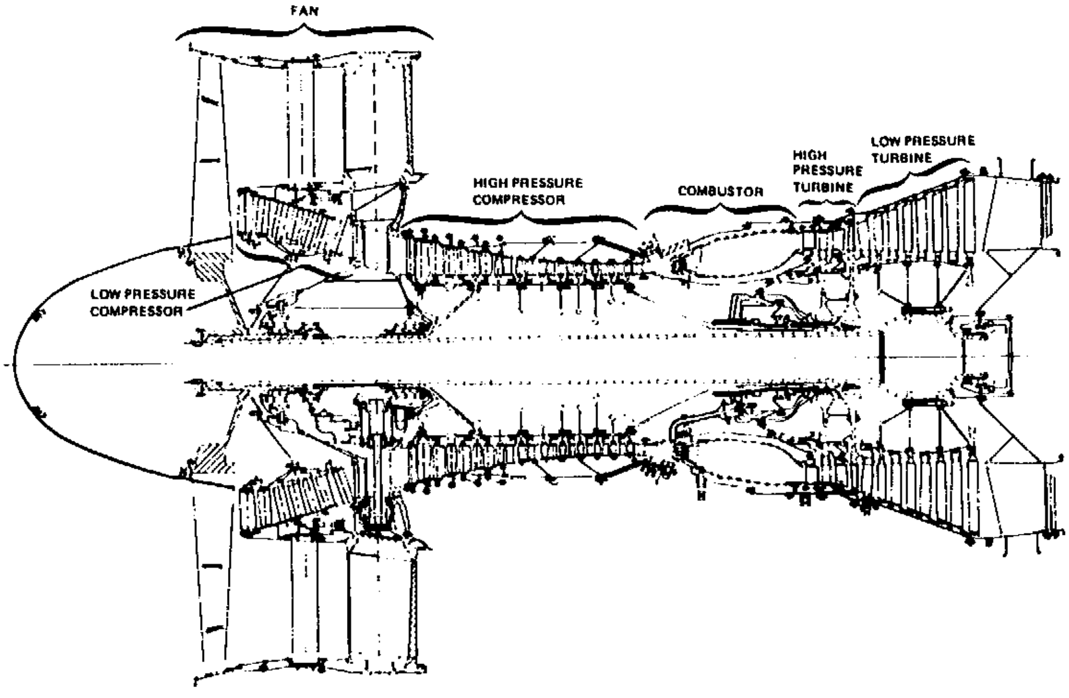

*Figure 2 Cross-Sectional Schematic of the JT9D-7 Reference Engine*

## TABLE III

## KEY SPECIFICATIONS OF THE JT9D-7 ENGINE

| | |
|---|---|
| Weight (kg) | 3982.5 |
| Length (m) | 3.912 |
| Maximum Diameter, cold (m) | 3.427 |
| Pressure Ratio | 21.7 |
| Airflow Rate (kg/s) | 691 |
| Maximum Sea-Level Static Thrust (kN) | 197 |
| Cruise Performance | |
| Mach Number | 0.85 |
| Altitude (m) | 10668 |
| Thrust (kN) | 44.6 |
| Specific Fuel Consumption (kg/Ns) | $1.979 \times 10^{-5}$ |

## 2. REFERENCE COMBUSTOR DESCRIPTION

The mechanical design of the JT9D reference combustor is shown in Figure 3. The combustor is annular in design with an overall length between the trailing edge of the compressor exit guide vane and the leading edge of the turbine inlet guide vane of 0.6m. The burning length between the fuel nozzle face and the turbine inlet guide vane leading edge is 0.45m. Key performance parameters of the JT9D-7 reference combustor are summarized in Table IV. The reference combustor exit average radial temperature profile is shown in Figure 4.

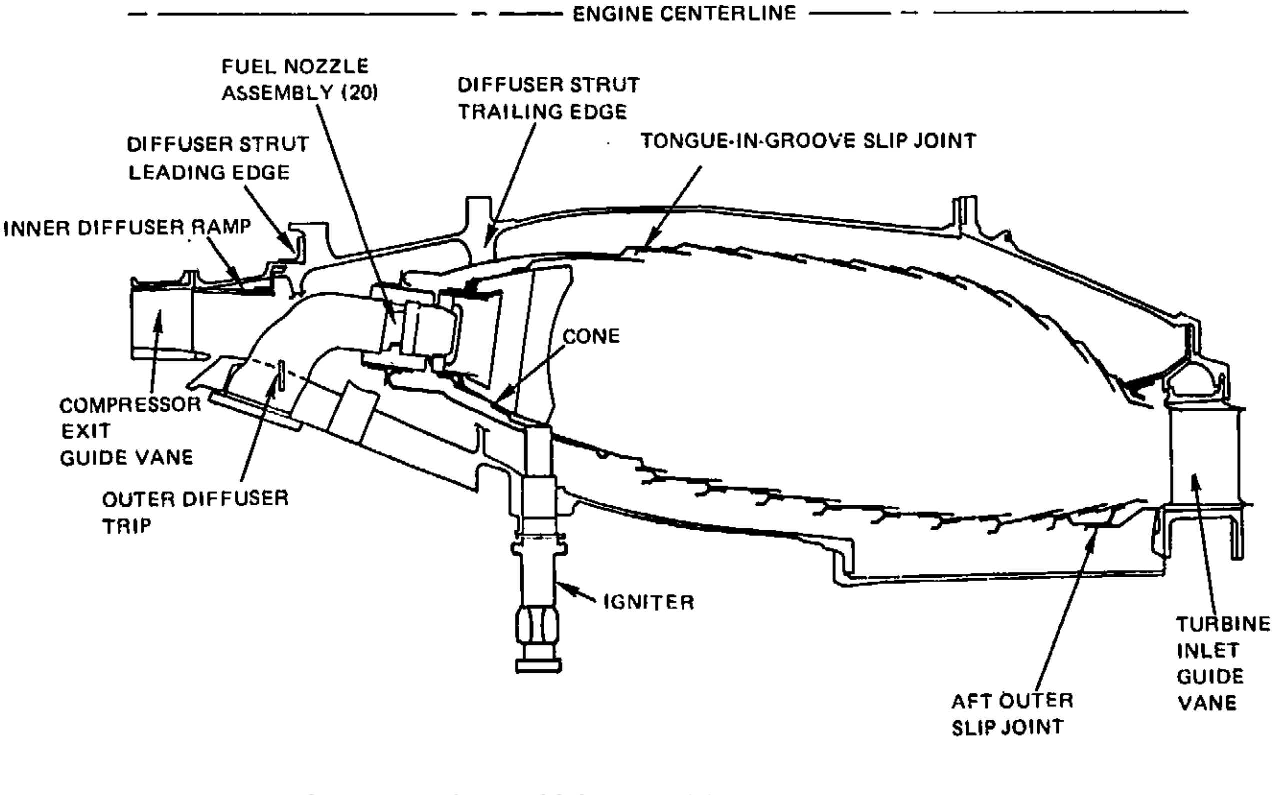
ENGINE CENTERLINE
FUEL NOZZLE ASSEMBLY (20)
DIFFUSER STRUT TRAILING EDGE
DIFFUSER STRUT LEADING EDGE
TONGUE-IN-GROOVE SLIP JOINT
INNER DIFFUSER RAMP
CONE
COMPRESSOR EXIT GUIDE VANE
OUTER DIFFUSER TRIP
IGNITER
TURBINE INLET GUIDE VANE
AFT OUTER SLIP JOINT

*Figure 3 Cross-Sectional Schematic of the JT9D-7 Reference Combustor*

## TABLE IV

## KEY OPERATING PARAMETERS OF THE JT9D-7 REFERENCE COMBUSTOR

| | |
|---|---|
| Compressor Exit Axial Mach Number | 0.26 |
| Compressor Discharge Temperature (K) | 767 |
| | |
| Combustor Temperature Rise (K) | 719 |
| Combustor Section Pressure Loss (%) | 5.2 |
| Combustor Exit Temperature Pattern Factor | 0.42 |
| Average Combustor Exit Temperature (K) | 1486 |

Note: All data for standard sea-level static take-off conditions.

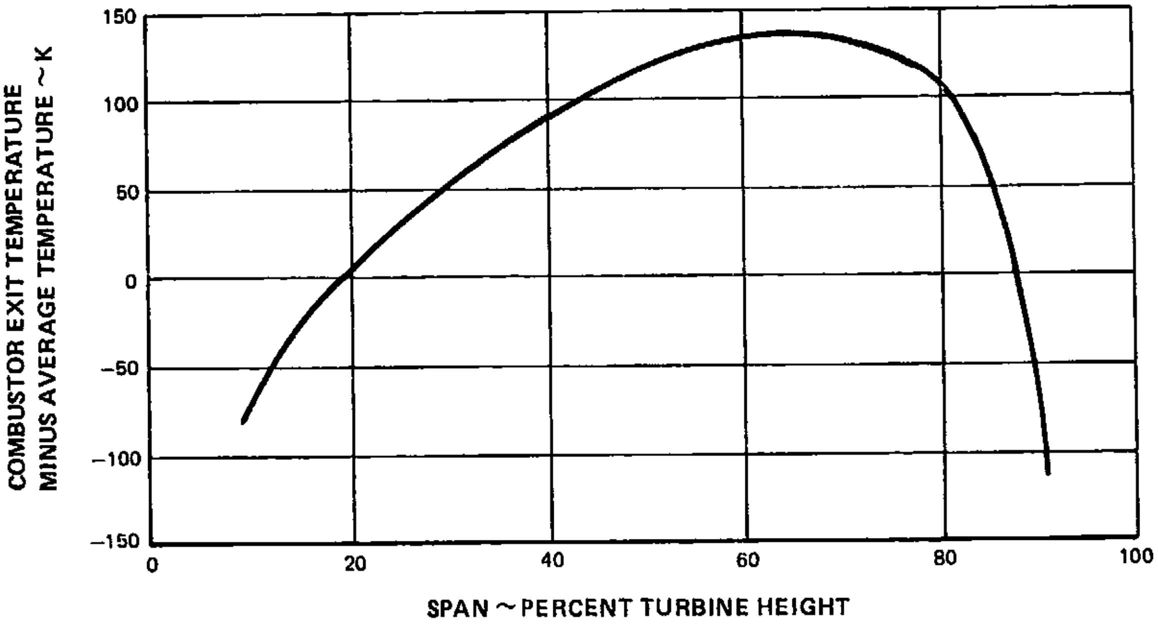

*Figure 4* *Reference Combustor Exit Average Radial Temperature Profile*

The JT9D-7 combustor incorporates a number of advanced features. The primary diffuser incorporates an inner ramp and outer trip followed by a dump section, and a burner hood is used to provide a positive pressure feed to the combustor front end. The hood is indented locally in ten places downstream of each diffuser case strut. A film-cooled louver construction is used for the combustor liners. The liner assembly features inner and outer slipjoints to facilitate assembly as well as to allow for liner thermal expansion. The fuel system features direct liquid fuel injection by the use of twenty duplex-pressure atomizing fuel nozzles. The nozzle portion of the fuel injector is enclosed in twenty short-cone swirler modules, which provide primary zone flame stabilization. Optional take-off thrust augmentation is provided by water injection through the fuel nozzle heatshields.

## 3. REFERENCE ENGINE COMBUSTOR POLLUTION LEVELS

Since the JT9D engine and combustion system were designed prior to current concerns regarding gaseous pollutants, the combustor was not specifically intended to provide low emissions. It does incorporate smoke reduction features and produces no visible smoke at any operating condition.

Exhaust emissions are periodically monitored during JT9D production acceptance tests, and typical results for the idle, 30-percent, 85-percent, and 100-percent sea-level static thrust engine power settings are shown in Table V. These power settings correspond to the EPA-specified simulated ground idle, approach, climb-out, and take-off conditions which are used in the establishment of aircraft engine emission standards. The data presented in Table V represent average emission levels for a JT9D-7 production engine incorporating combustor configuration EC 289386. This combustor configuration has been installed in production engines shipped since November 1975. The data have been corrected to standard day temperature and pressure and to an ambient humidity level of 6.3 g $H_2O$/kg dry air. Jet-A fuel was used for the tests. The corresponding values of EPA Parameter (EPAP) are also presented in Table V. This parameter combines emission rates at the engine idle, approach, climb, and take-off operating modes, integrated over a specified landing-take-off cycle (Reference 1).

TABLE V

REPRESENTATIVE JT9D-7 PRODUCTION ENGINE EMISSION LEVELS
AND EXPERIMENTAL CLEAN COMBUSTOR PROGRAM GOALS

A. Emission Indices

| Operating Condition | Carbon Monoxide Emissions (g/kg fuel) |  | Total Unburned Hydrocarbons Emissions (g/kg fuel) |  | Oxides of Nitrogen Emissions (g/kg fuel) |  | Smoke (SAE Smoke Number) |  |
|---|---|---|---|---|---|---|---|---|
|  | JT9D-7 | ECCP Goal | JT9D-7 | ECCP Goal | JT9D-7 | ECCP Goal | JT9D-7 | ECCP Goal |
| Ground Idle | 46.7 | 20 | 21.6 | 4 | 3.9 | -- | -- | -- |
| Approach (30% Power) | 3.4 |  | 0.6 | -- | 7.8 | -- | -- | -- |
| Climbout (85% Power) | 0.5 | -- | 0.4 | -- | 28.8 | -- | -- | -- |
| Sea Level Take-off (100% Power) | 0.4 | -- | 0.4 | -- | 39.9 | 10 | 4 | 15 |

B. EPA Parameter (lbm. pollutant/1000 lbf. thrust - hr./landing-take-off cycle)

| Carbon Monoxide |  | Total Unburned Hydrocarbons |  | Oxides of Nitrogen |  |
|---|---|---|---|---|---|
| JT9D-7 | ECCP Goal | JT9D-7 | ECCP Goal | JT9D-7 | ECCP Goal |
| 8.5 | 4.3 | 3.9 | 0.8 | 5.9 | 3.0 |

Notes: Oxides of nitrogen data presented as nitrogen dioxide equivalent.

Data represent average emission levels for a JT9D-7 production engine incorporating combustor configuration EC 289386.

Ground idle data is without compressor air bleed.

## B. TEST COMBUSTOR CONCEPTS AND CONFIGURATIONS

### 1. HYBRID COMBUSTOR

### a. General Description

The initial Hybrid combustor Configuration H1 is shown in Figures 5, 6, and 7. This combustor concept incorporates two burning zones that are separated in both the axial and radial directions. The design basis for each zone evolved from two combustor concepts that were developed during the Phase I program. The pilot zone duplicates the physical geometry of the Staged Premix combustor Configuration P3 pilot which exceeded the low power emission goals in Phase I. The main zone was based on the Swirl-Can combustor Configuration N9, which demonstrated significant reductions in high power emissions of oxides of nitrogen.

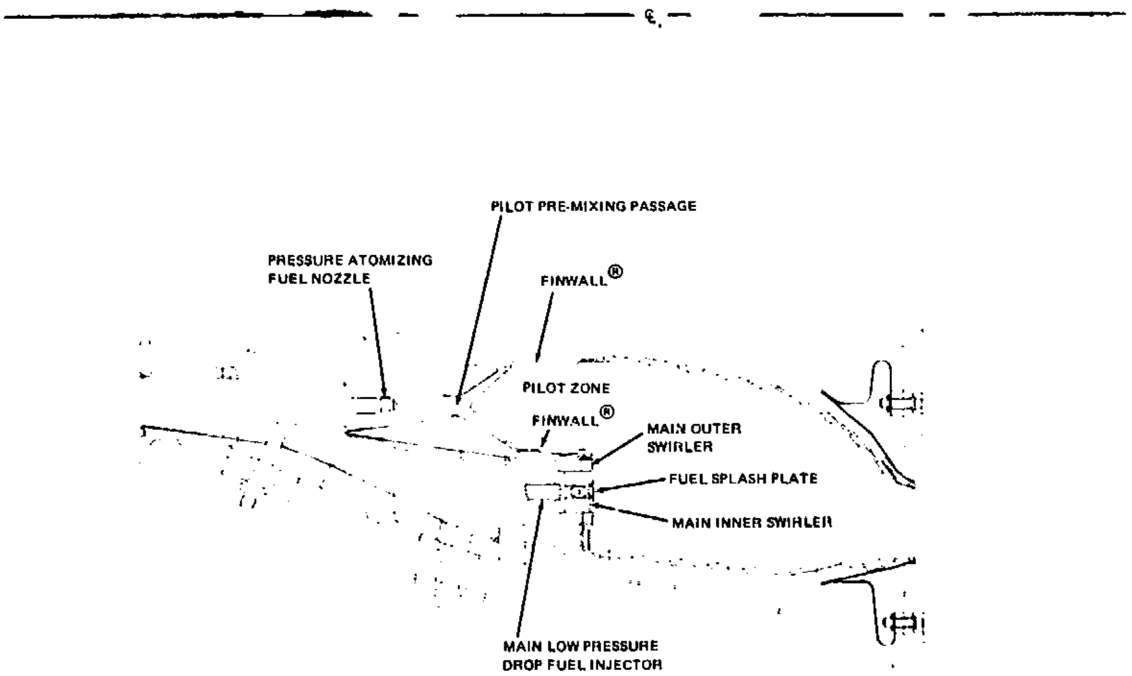

*Figure 5 Cross-Sectional Side View of Hybrid Combustor*

The pilot zone was designed for an equivalence ratio of 0.8 at idle conditions to provide low levels of carbon monoxide and unburned hydrocarbon emissions as well as good stability during lighting. Fuel is introduced into the premix passage through forty pressure-atomizing fuel injectors (on a full annular basis), where it mixes with air and is partially vaporized. The combustible mixture then passes through holes in the flameholder and into the combustion zone. At high power conditions, the pilot zone equivalence ratio is reduced to reduce formation of oxides of nitrogen.

The main zone was designed to provide lean combustion followed by quick quenching with dilution air to reduce emissions of oxides of nitrogen at high power conditions. As shown in Figure 7, the zone consists of an arrangement of concentric counter-rotating swirlers located downstream and displaced radially from the pilot zone. Fuel is introduced through low pressure drop injectors located at the center of the swirlers. The fuel impinges on a splash plate located in the exit plane of the swirlers, where it is broken into small droplets and then entrained in the swirling flow.

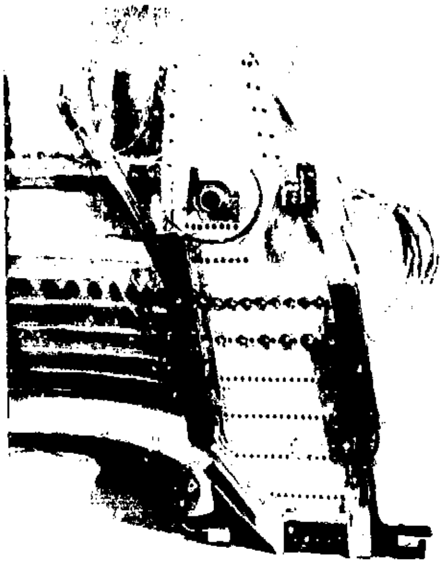

*Figure 6 Exterior View of Hybrid Combustor (XPN-52117)*

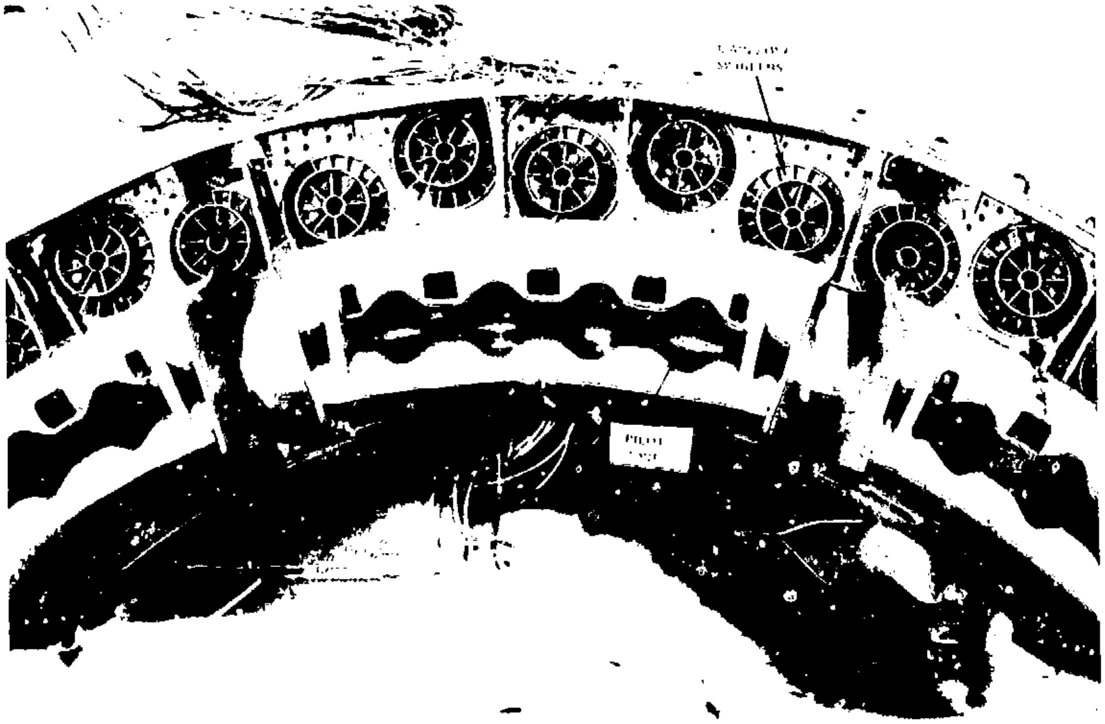

*Figure 7 Front-End View of Hybrid Combustor (XPN-53775)*

During Phase I, aspiration problems were encountered with the Swirl-Can modular combustor as a result of poor inlet air flow distribution. Consequently, a transparent plastic flow model of the Hybrid combustor was fabricated and tested at cold flow conditions prior to finalizing the Phase II design. The tests revealed nonuniform airflow distribution resulting from aerodynamic blockages caused by radial flows issuing from the strut cutouts in the burner hood. To correct this problem, the Phase II hybrid design incorporated the following changes:

1. The burner hood strut cutouts were extended and contoured to provide a smooth transition to the inner and outer combustor liners, and
2. The outer diffuser case wall was recontoured to reduce the diffuser area ratio approaching the main zone air inlet.

The effectiveness of the final design in improving airflow distribution is shown in Figure 8.

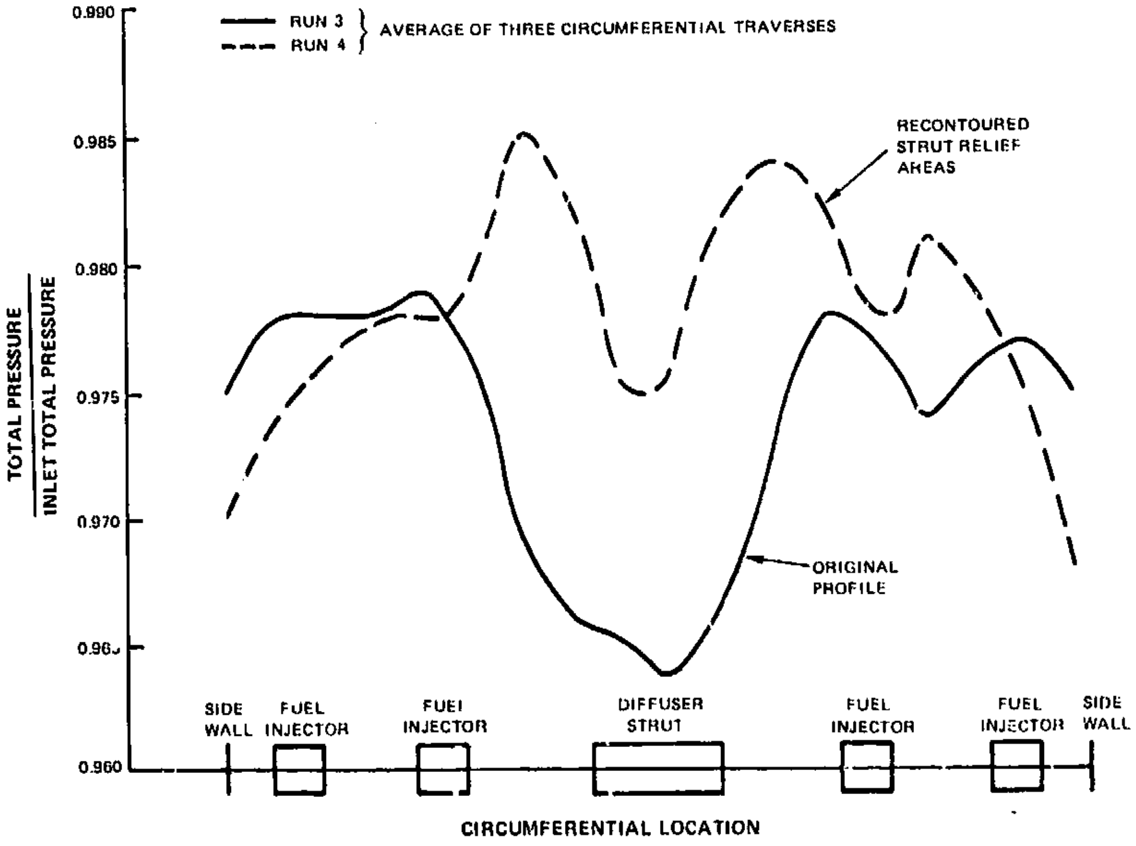

*Figure 8 Pressure Loss Profiles Showing Improvement at Main Burning Zone Entrance Plane Obtained for Phase II Hybrid Combustor*

## b. Test Configurations

Optimum airflow fractions for the Premix pilot zone and Swirl-Can main zone were determined during the Phase I test program. However, the quantity of air available after liner cooling requirements had been satisfied was insufficient to permit both pilot and main zones to be operated at their respective optimum equivalence ratios. Therefore, the primary focus of the configuration modifications was to shift the pilot and main zone equivalence ratio to minimize pollutant formation. Other variables investigated were the main zone swirler arrangement and the pilot zone fuel injector type.

The configurations tested are summarized in Tables VI and VII. Specific types of configuration change are discussed below. Detailed configuration descriptions are presented in Appendix A.

### Pilot Zone Equivalence Ratio

The effect of two different pilot zone equivalence ratios on idle emissions was evaluated. The initial configurations, H1 through H4, were tested with a pilot zone equivalence ratio of 0.8. In Configuration H5, the amount of premix passage airflow was reduced to increase the equivalence ratio to 1.2. In the final two configurations, H6 and H7, the pilot zone equivalence ratio was returned to 0.8.

TABLE VI

HYBRID COMBUSTOR CONFIGURATION SUMMARY

| | Pilot Zone | | | Main Zone | | | Dilution Air | |
|---|---|---|---|---|---|---|---|---|
| Configuration | Equivalence Ratio at Idle With Bleed | Number of Fuel Injectors | Fuel Injector Type* | Swirler Arrangement | Number of Fuel Injectors | Fuel Injector Type* | Inner Liner | Outer Liner |
| H1 | 0.8 | 10 | PA-HC | Two Concentric Counter-Rotating Swirlers | 11 | LPD | Yes | No |
| H2 | 0.8 | 10 | PA-HC | Two Co-rotating Swirlers | 11 | LPD | Yes | No |
| H3 | 0.8 | 10 | PA-HC | Outer Swirler Blocked and Inner Area Reduced 20% | 11 | LPD | Yes | Yes |
| H4 | 0.8 | 10 | PA-SC | Outer Swirler Blocked and Inner Area Reduced 20% | 11 | LPD | Yes | Yes |
| H5 | 1.2 | 10 | PA-HC | Same as H1 But Swirler Area Increased 40% | 11 | LPD | Yes | No |
| H6 | 0.8 | 10 | PA-HC | Same as H1 But Swirler Area Increased 40% | 11 | LPD | No | No |
| H7 | 0.8 | 10 | PA-SC | Same as H1 But Swirler Area Increased 40% | 11 | LPD | No | No |

*Fuel Injector Types.

| | |
|---|---|
| PA | Pressure Atomizing |
| HC | Hollow Cone |
| SC | Solid Cone |
| LPD | Low Pressure Drop |

ORIGINAL PAGE IS
OF POOR QUALITY

## TABLE VII

## AIRFLOW DISTRIBUTIONS FOR HYBRID COMBUSTOR CONFIGURATIONS

| | Pilot Zone | | | | Main Zone | | | | | Cooling | | | | | |
|---|---|---|---|---|---|---|---|---|---|---|---|---|---|---|---|
| | | Flameholder Cooling | | | | | | | | | | | | | |
| Configuration | Premixing Passage | Original Design | Supplementary Inner Tip | Supplementary Outer Tip | Inner Swirler | Outer Swirler | Total Swirler | Inner Liner Dilution | Outer Liner Dilution | FINWALL® Inner Liner | FINWALL® Outer Liner | Bulkhead | Sidewall | Turbine Inner Shroud Cooling | Turbine Outer Shroud Cooling |
| H1 | 18.14 | 4.85 | 0 | 0 | 20.34 | 24.00 | 44.34 | 10.64 | 0 | 0.82 | 0.99 | 3.94 | 5.10 | 4.88 | 6.30 |
| H2 | 16.30 | 4.40 | 0 | 0 | 20.80 | 24.50 | 45.30 | 10.88 | 0 | 0.82 | 1.00 | 4.00 | 5.40 | 5.00 | 6.90 |
| H3 | 18.00 | 4.00 | 0.60 | 0 | 15.80 | 0 | 15.80 | 12.80 | 24.9 | 1.00 | 1.30 | 4.40 | 5.50 | 6.10 | 5.60 |
| H4 | 18.00 | 4.00 | 0.60 | 0 | 15.80 | 0 | 15.80 | 12.80 | 24.9 | 1.00 | 1.30 | 4.40 | 5.50 | 5.10 | 5.60 |
| H5 | 12.46 | 3.51 | 0.47 | 0 | 18.85 | 34.18 | 53.03 | 9.83 | 0 | 0.73 | 0.89 | 3.87 | 4.72 | 4.50 | 5.99 |
| H6 | 18.00 | 4.00 | 0.50 | 0.8 | 17.40 | 31.50 | 48.90 | 0 | 0 | 0.90 | 1.50 | 9.50 | 5.00 | 4.90 | 6.00 |
| H7 | 17.60 | 4.00 | 0.50 | 0.8 | 17.00 | 30.80 | 47.80 | 0 | 0 | 0.80 | 1.40 | 9.30 | 6.70 | 4.90 | 6.20 |

Flowrates given in percent of total combustor flow.

ORIGINAL PAGE IS
OF POOR QUALITY

### Main Zone Equivalence Ratio

Main zone modifications were made to evaluate the effects of both equivalence ratio and airflow distribution on emission levels. In the initial design, the inner and outer main zone swirlers operated with approximately equal flow rates that provided a bulk equivalence ratio of 0.6, with dilution air introduced only through the inner liner. In Configurations H3 and H4, the outer swirler was blocked, and the flow was diverted to the outer liner. In addition, the flow through the inner liner was increased. This increased the bulk main zone equivalence ratio to 1.6. In Configuration H5, the dilution flow through the outer liner was blocked and the flow was returned to the outer swirler, and the dilution flow through the inner liner was returned to approximately its former level. This configuration included a richer pilot zone, and the airflow removed from the pilot zone was diverted to the main burner outer swirlers.

### Main Zone Swirler Arrangement

The swirlers for the main burning zone consisted of two concentric swirlers around each fuel injector. In the initial configuration, these concentric swirlers produced counter-rotating flows. Tests were also conducted with both the inner and outer swirlers producing co-rotating flow, and with the outer swirler blocked. The co-rotating swirl flow was tested in Configuration H2, and the outer swirler was blocked in Configurations H3 and H4. For these two configurations, the inner swirler flow area was reduced approximately 20 percent. For the remaining configurations, Configurations H5 through H7, the initial counter-rotating swirler arrangement was used with the outer swirler area increased approximately 40 percent.

### Pilot Zone Fuel Injector Type

Two pilot zone fuel nozzle types were tested to determine the effect of changes in fuel distribution. Both were pressure atomizing nozzles. One provided a hollow spray cone while the other provided a solid spray cone.

### Pilot Zone Flameholder Attachment and Cooling

Modifications were incorporated throughout the program to improve flameholder durability. In the initial design, the flameholder was welded directly to the inner combustor liner. This arrangement was found to restrict thermal growth of the flameholder, resulting in deformation of the flameholder and premix passage, and inadequate flameholder coolant flow. The flameholder attachment was modified in Configuration H2 to provide a rigid attachment at only one sidewall. Retaining tabs were used to axially position the flameholder along the outer liner, the FINWALL® ring between the pilot and main zones, and the opposite sidewall. In Configuration H3, cooling holes were added in the trailing edge of the flameholder, and in Configuration H6, cooling of the outer portion of the trailing edge of the flameholder was increased.

### Pilot-to-Main Zone Fuel Split

The fuel flow split between the pilot and main zones at operating conditions above idle was investigated for all configurations. By varying the fuel split during the tests, the relative equivalence ratios between zones could be optimized for all emissions. In early configurations, the results were also used to indicate where adjustment of the equivalence ratio produced by changes in the airflow distribution would be beneficial. Tests were conducted at the approach condition with fuel supplied only to the pilot zone, only to the main zone, or with various fuel-flow splits with fuel supplied to both zones.

## 2. VORBIX COMBUSTOR

### a. General Description

A cross-section schematic drawing of the initial Phase II Vorbix combustor design is shown in Figure 9, and representative photographs are shown in Figure 10 and 11. The design was evolved from the Phase I Vorbix combustor and incorporates two burning zones separated axially by a high velocity throat section. The pilot zone is a conventional swirl-stabilized, direct-injection combustor employing thirty fuel injectors (on a full annular basis). It was sized to provide the required heat release rate for idle operation at high efficiency. Emissions of carbon monoxide and unburned hydrocarbons are minimized at idle operating conditions primarily by maintaining a sufficiently high pilot zone equivalence ratio to allow complete burning of the fuel.

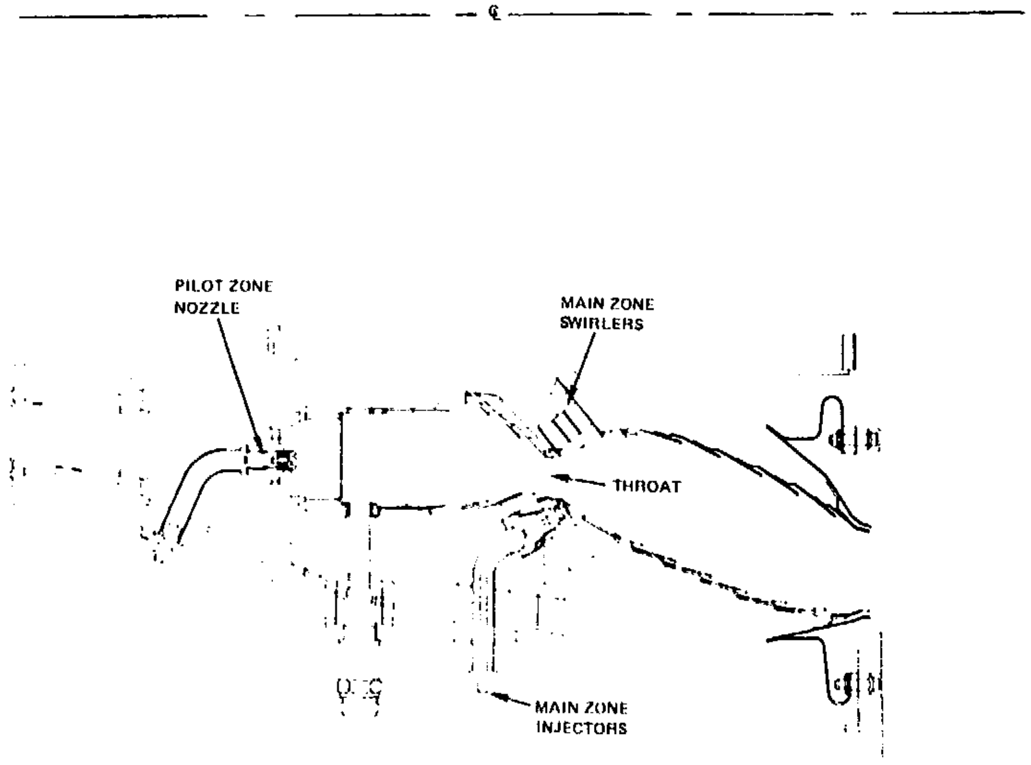

*Figure 9 Swirl Vorbix Combustor Design*

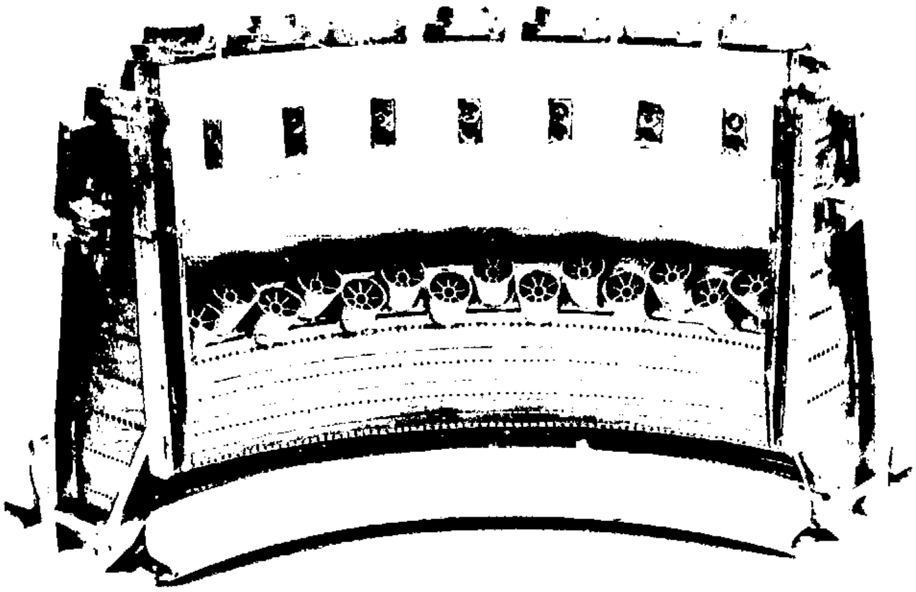

Figure 10 Exterior View of Vorbix Combustor Configuration S11 (XPN-51834)

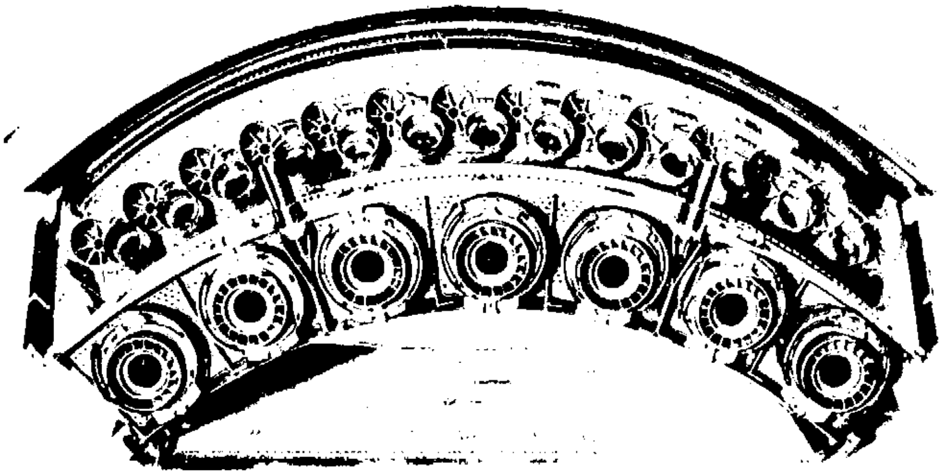

Figure 11 Front-End View of Vorbix Combustor Configuration S11 (XPN-51835)

At take-off conditions, the pilot exhaust equivalence ratio is reduced as low as 0.3 (including pilot dilution air) to minimize formation of oxides of nitrogen. The minimum equivalence ratio for the pilot zone is determined by the overall lean blowout limits, combustion efficiency, and the need to maintain sufficient pilot zone temperature to vaporize and ignite the main zone fuel.

Main zone fuel is introduced through fuel injectors located at the outer wall of the liner downstream of the pilot zone discharge location. Either thirty or sixty fuel injectors were used (on a full annular basis). Main zone combustion and dilution air is introduced through sixty swirlers positioned on each side of the combustor (on a full annular basis).

The Phase II Vorbix design differed from the Phase I design in that the length of the pilot zone was increased by 3.8 cm and the main zone length was reduced by 3.8 cm. The increase in pilot zone length was made to reduce residual carbon monoxide and unburned hydrocarbons produced at idle conditions. The corresponding decrease in main zone length was expected to reduce the main zone residence time, thereby reducing the formation of oxides of nitrogen.

### b. Test Configurations

Initial testing of the Vorbix combustor was concentrated on demonstrating further reductions in emissions. Modifications were made to the pilot zone to reduce emissions of carbon monoxide and total unburned hydrocarbons at idle conditions. Changes were made to the main zone to reduce emissions of oxides of nitrogen at high power conditions and also to identify those design features that would affect the radial temperature profile and pattern factor. Later testing was directed toward correcting performance deficiencies and maintaining or improving the emission characteristics. The effect of pilot-to-main zone fuel split was investigated for all configurations.

The configurations tested are summarized in Tables VIII and IX. Complete specifications are presented in Appendix A. In the pilot zone, changes were made to burning volume, swirler/airflow schedule, and fuel injector type. In the main zone, modifications were made to the swirler orientation, fuel source density, fuel injection technique, and airflow schedule. Details of these modifications are discussed in the following sections.

#### Pilot Zone Volume

The pilot zone volume was increased approximately 30 percent in Configuration S18 in an attempt to improve idle combustion efficiency. The revised pilot zone geometry is shown in Figure 12. The volume increase was specified based on results presented in Reference 2, which indicate that combustion efficiency is proportional to available combustion volume. In Configuration S19 through S21, the enlarged pilot volume was evaluated without a hood attachment. For the remaining configurations, a hood derived from the current JT9D-7 hood was installed to reduce diffuser section pressure loss and to improve airflow feed to the pilot zone.

TABLE VIII

VORBIX COMBUSTOR CONFIGURATION SUMMARY

| | Pilot Zone | | | | | | Main Zone | | | | |
|---|---|---|---|---|---|---|---|---|---|---|---|
| | | | | | | | | Liner Dilution Air | | Fuel Injector | |
| Configuration | Injector Type | Swirler Cap | Cap Opening (cm) | Swirler Type | Pilot Volume | Dilution Airflow | Swirler Type | Inner | Outer | Number | Type |
| S11 | PA | Yes | 2.8 | Baseline (Left) | Baseline | No | Baseline (Right) | No | No | 13 | PA |
| S12 | PA | Yes | 2.8 | Baseline | Baseline | No | Alternate Rotation | No | No | 13 | PA |
| S13 | PA | Yes | 2.8 | Baseline | Baseline | No | Alternate Rotation | No | No | 7 | PA |
| S14 | PA | Yes | 2.8 | Baseline | Baseline | No | Alternate Rotation | No | No | 7 | PA With Higher Flow Number |
| S15 | PA | Yes | 2.8 | Baseline | Baseline | No | Alternate Rotation | No | No | 13 | PA With Higher Number |
| S16 | PA | Yes | 2.8 | Baseline With Blockage Ring | Baseline | No | Baseline | Yes | Yes | 13 | PA |
| S17 | Aerating | Yes | 2.8 | Baseline With Blockage Ring | Baseline | No | Baseline | Yes | Yes | 13 | PA |
| S18 | Aerating | Yes | 2.0 | Low Flow Swirler | 30% Increase | Yes | Baseline | Yes | Yes | 13 | PA |
| S19 | PA | Yes | 2.0 | Low Flow Swirler | 30% Increase | Yes | Baseline | Yes | Yes | 13 | PA |
| S20 | PA | No | --- | Low Flow Swirler | 30% Increase | Yes | Baseline With 0.279 cm Blockage Rings | Yes | Yes | 13 | PA |
| S21 | PA | Yes | 1.2 | Dual | 30% Increase | Yes | Baseline With 0.279 cm Blockage Rings | Yes | Yes | 13 Premix Tubes | PA |
| S22 | PA | Yes | 3.3 | JT9D-70 Swirler | 30% Increase | Yes | Baseline With 0.279 cm Blockage Rings | Yes | Yes | 13 | PA |
| S23 | PA | Yes | 3.3 | JT9D-70 Swirler | 30% Increase | Yes | Baseline With Blockage Rings: Inner 0.475 cm; Outer 0.279 cm | No | Yes | 13 | PA |
| S24 | PA | Yes | 3.3 | JT9D-70 Swirler | 30% Increase | Yes | Baseline With Blockage Rings: Inner 0.475 cm; Outer 0.279 cm | No | Yes | 13 | PA |
| S25 | PA | Yes | 3.3 | JT9D-70 Swirler | 30% Increase | Yes | Baseline With Blockage Rings: Inner 0.475 cm; Outer 0.279 cm | No | Yes | 13 | PA |

*PA - Pressure Atomizing Injector

ORIGINAL PAGE IS
OF POOR QUALITY

## TABLE IX

## AIRFLOW DISTRIBUTIONS FOR VORBIX COMBUSTOR CONFIGURATIONS

| | Pilot Zone | | | | | Main Zone | | | | | | | Cooling | | | | | | |
|---|---|---|---|---|---|---|---|---|---|---|---|---|---|---|---|---|---|---|---|
| Configuration | Nozzle | Swirler | Swirler Cooling | Inner Liner Dilution | Outer Liner Dilution | Inner Swirler | Outer Swirler | Total Swirler | Inner Liner Dilution | Outer Liner Dilution | Premixing Passage | Nozzle Cooling | FINWALL® Cylinder | FINWALL® Inner Liner | FINWALL® Outer Liner | Bulkhead | Sidewall | Inner Shroud Cooling | Outer Shroud Cooling |
| S11 | 0 | 13.3 | 1.2 | 0 | 0 | 26.0 | 28.9 | 54.9 | 0 | 0 | -- | 0 | 2.7 | 1.3 | 1.4 | 2.7 | 5.0 | 6.8 | 10.7 |
| S12 | 0 | 13.3 | 1.2 | 0 | 0 | 28.2 | 26.2 | 54.4 | 0 | 0 | -- | 1.0 | 2.3 | 1.1 | 1.1 | 2.7 | 5.4 | 7.8 | 9.7 |
| S13 | 0 | 13.3 | 1.2 | 0 | 0 | 28.2 | 26.2 | 54.4 | 0 | 0 | -- | 1.0 | 2.3 | 1.1 | 1.1 | 2.7 | 5.4 | 7.8 | 9.7 |
| S14 | 0 | 13.3 | 1.2 | 0 | 0 | 28.2 | 26.2 | 54.4 | 0 | 0 | -- | 1.0 | 2.3 | 1.1 | 1.1 | 2.7 | 5.4 | 7.8 | 9.7 |
| S15 | 0 | 13.3 | 1.2 | 0 | 0 | 28.2 | 26.2 | 54.4 | 0 | 0 | -- | 1.0 | 2.3 | 1.1 | 1.1 | 2.7 | 5.4 | 7.8 | 9.7 |
| S16 | 0 | 13.3 | 1.3 | 0 | 0 | 24.1 | 31.5 | 55.6 | 4.1 | 4.7 | -- | 1.1 | 2.2 | 1.1 | 1.4 | 2.8 | 5.6 | 7.4 | 10.8 |
| S17 | 3.2 | 2.2 | 1.4 | 0 | 0 | 28.0 | 28.8 | 56.8 | 4.0 | 4.5 | -- | 1.1 | 2.5 | 1.2 | 1.4 | 3.1 | 5.8 | 7.9 | 4.9 |
| S18 | 1.7 | 5.1 | 0 | 2.9 | 3.0 | -- | -- | 54.3 | 3.4 | 4.6 | -- | 1.0 | -- | -- | -- | 2.3 | 4.5 | 7.9 | 9.3 |
| S19 | 0 | 5.5 | 0 | 3.0 | 2.6 | -- | -- | 56.9 | 3.6 | 4.7 | -- | 1.0 | -- | -- | -- | 2.4 | 4.4 | 7.0 | 8.9 |
| S20 | 0 | 12.9 | 0 | 3.7 | 3.6 | -- | -- | 46.8 | 3.2 | 4.9 | -- | 1.1 | -- | -- | -- | 2.5 | 4.4 | 7.0 | 9.9 |
| S21 | 0 | 15.7 | 0 | 3.9 | 3.8 | -- | -- | 38.8 | 2.9 | 4.0 | 7.8 | 0 | -- | -- | -- | 2.6 | 4.5 | 6.6 | 9.4 |
| S22 | 0 | 14.5 | 0 | 1.8 | 2.2 | 22.6 | 25.0 | 47.6 | 3.5 | 4.3 | -- | 1.1 | -- | -- | -- | 3.0 | 4.8 | 7.0 | 10.3 |
| S23 | 0 | 16.7 | 0 | 3.9 | 3.2 | 17.3 | 25.4 | 42.7 | 0 | 11.8 | -- | 1.0 | -- | -- | -- | 3.0 | 3.7 | 6.1 | 7.9 |
| S24 | 0 | 16.7 | 0 | 3.9 | 3.2 | 17.3 | 25.4 | 42.7 | 0 | 11.8 | -- | 1.0 | -- | -- | -- | 3.0 | 3.7 | 6.1 | 7.9 |
| S25 | 0 | 13.5 | 0 | 3.3 | 5.2 | 9.4 | 29.1 | 38.5 | 0 | 13.9 | -- | 1.2 | -- | -- | -- | 3.1 | 5.5 | 6.3 | 9.5 |

Flowrates given in percent of total combustor flow.

ORIGINAL PAGE IS
OF POOR QUALITY

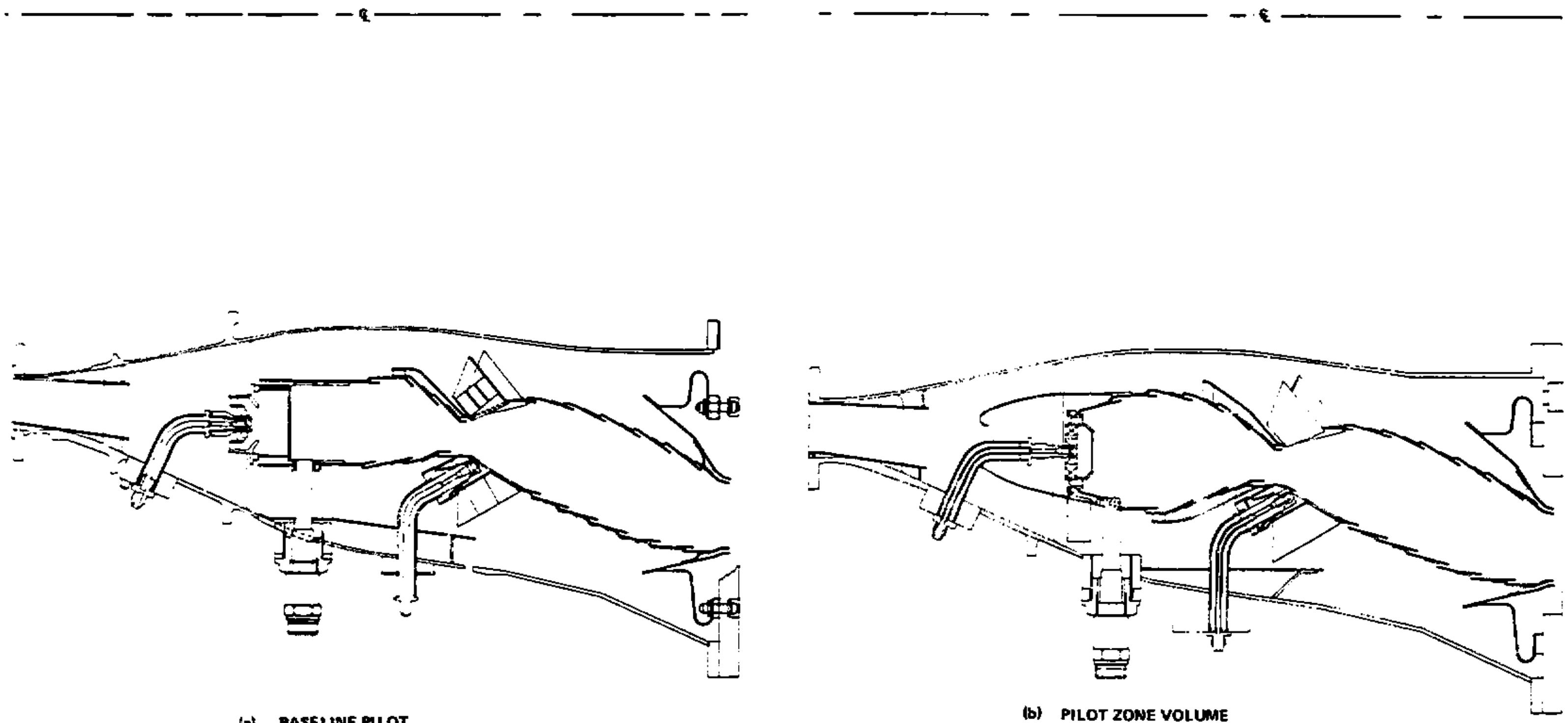

(a) BASELINE PILOT ZONE VOLUME

(b) PILOT ZONE VOLUME INCREASED BY 30 PERCENT

Figure 12 Designs of Baseline Swirl Vorbix Combustor and Combustor with Increased Pilot Zone Volume

### Pilot Zone Swirler/Airflow Schedule

Various pilot swirler arrangements and airflow distributions were evaluated to assess the effect on combustor emission and performance characteristics. The pilot zone utilized for the first five configurations was transferred directly from the final Phase I configuration, with the exception of increased length. The swirlers admitted 13.3 percent of the total combustor airflow and no liner dilution airflow was used. The swirler airflow was metered by swirler open area in conjunction with an air cap in the form of a toroidal deflector located downstream of the swirler vanes. The air cap, visible in Figure 13, directs the swirling airflow towards the swirler fuel nozzle centerline and augments the tangential velocity component.

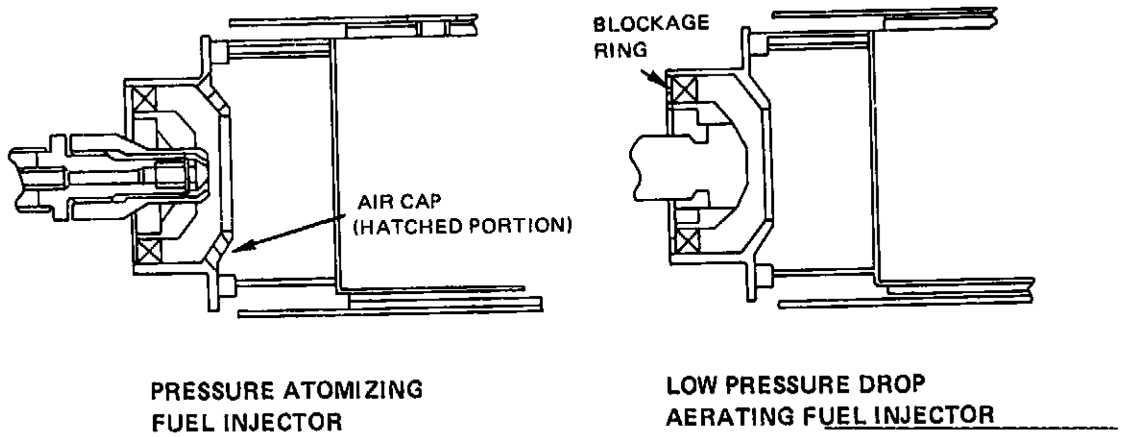
BLOCKAGE RING
AIR CAP (HATCHED PORTION)
PRESSURE ATOMIZING FUEL INJECTOR
LOW PRESSURE DROP AERATING FUEL INJECTOR

*Figure 13 Swirl Vorbix Combustor Pilot Burner Front-End Designs with Pressure Atomizing Fuel Injector and Low Pressure Drop Aerating Fuel Injector*

For Configurations S16 through S19, blockage rings were added to the pilot swirlers to reduce airflow to the range of 2 to 5 percent of the total combustor flow. This produced a pilot equivalence ratio of approximately 2. Configurations S18 and S19 included approximately 6 percent pilot zone dilution air.

Pilot zone equivalence ratio was reduced for Configuration S20 by increasing the swirl airflow to approximately 13 percent. This was accomplished by removing the air cap, increasing the swirler size, and increasing the dilution airflow by approximately 0.7 percent. In Configuration S21, the swirler flow was increased to 15.7 percent by the addition of a concentric swirler and a revised air cap. In Configuration S22, the dual concentric swirlers were replaced by a single JT9D-70 type swirler with approximately the same flow rate as the concentric swirlers. This swirler was utilized for Configurations S22 through S25, with adjustment of swirler airflow accomplished by changing the metering area of the toroidal deflector air cap.

### Pilot Zone_Fuel Injector Type

Two fuel injector types were investigated. Most testing was conducted with pressure atomizing fuel injectors which depend on the fuel pressure to atomize the fuel. Two tests were conducted with low pressure drop aerating fuel injectors which utilize the pressure drop within the combustor for fuel atomizing. The two fuel nozzle installations are shown in Figure 13.

### Main Zone Swirler Orientation

Main zone swirlers are located between main fuel injectors to promote mixing of the fuel and air. In the Phase I program, testing revealed that the combustor exit radial temperature pattern was influenced by the orientation of the swirlers, that is, whether adjacent swirlers provided swirl in the same direction or in opposite directions. In Phase II, the effect of swirl direction was also investigated to determine if the Phase I results were applicable to the larger swirlers used in Phase II and also to determine the effects of swirl direction on combustor performance. The swirler arrangements evaluated in Phase II are shown in Figure 14.

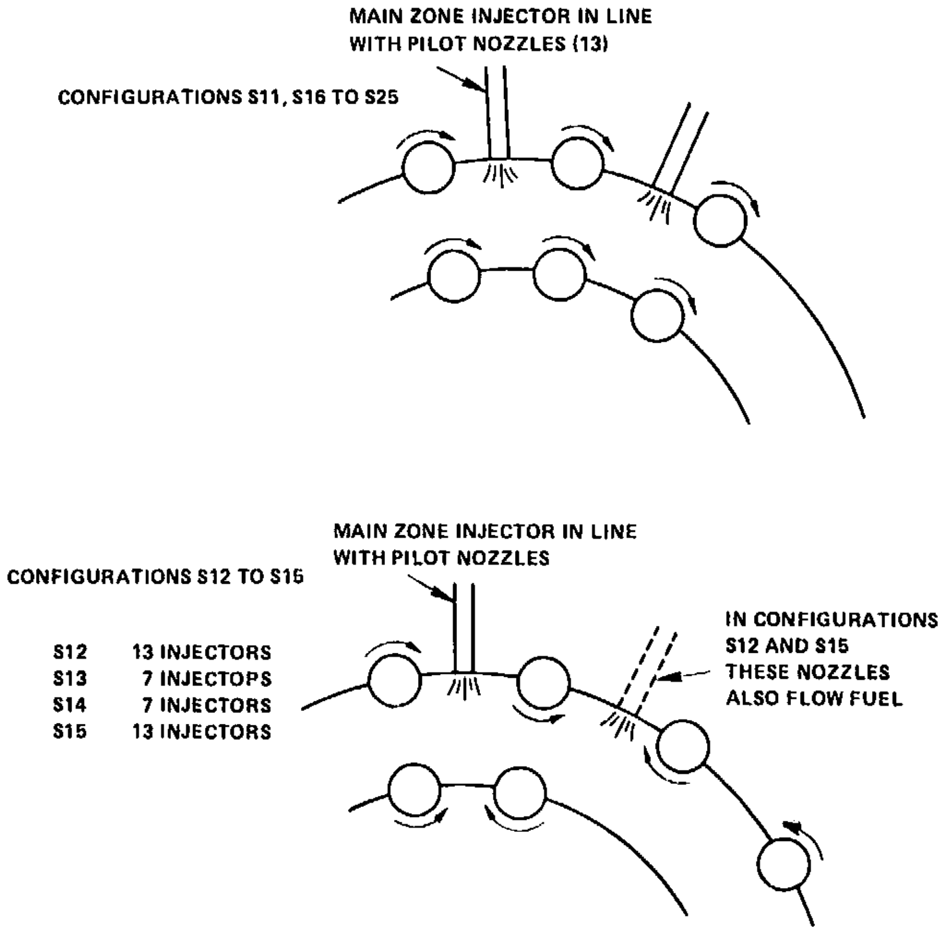
MAIN ZONE INJECTOR IN LINE WITH PILOT NOZZLES (13)
CONFIGURATIONS S11, S16 TO S25
MAIN ZONE INJECTOR IN LINE WITH PILOT NOZZLES
CONFIGURATIONS S12 TO S15
S12 13 INJECTORS
S13 7 INJECTOPS
S14 7 INJECTORS
S15 13 INJECTORS
IN CONFIGURATIONS S12 AND S15 THESE NOZZLES ALSO FLOW FUEL

*Figure 14* *Swirl Vorbix Combustor Main Zone Swirler Orientations Evaluated in Phase II*

### Main Zone Fuel Source Density and Fuel Injection Technique

Three main zone fuel system variables were investigated as part of the Phase II program. The first of these was fuel source density. Tests were conducted with seven and with thirteen main zone fuel injectors (corresponding to thirty or sixty fuel injectors on a full annular basis). The tests were directed toward confirming exit temperature distribution trends identified in Phase I and determining the effect of reducing the number of injectors on emissions.

The second variation was fuel injector pressure drop. Tests were conducted with two different pressure drop levels, utilizing both seven and thirteen injectors at each pressure drop level, to assess the effect on emissions and radial temperature profile.

The third variation was the use of premixing tubes for each of the main zone fuel injectors, as shown in Figure 15. The premixing tubes are designed to provide a rich, partially vaporized fuel-air mixture with an equivalence ratio of three. This design was based on results obtained from other Pratt & Whitney Aircraft programs and was expected to provide reduced emissions of oxides of nitrogen at high power levels with additional benefits related to reduction in the fuel nozzle coking tendency and simpler liner removal.

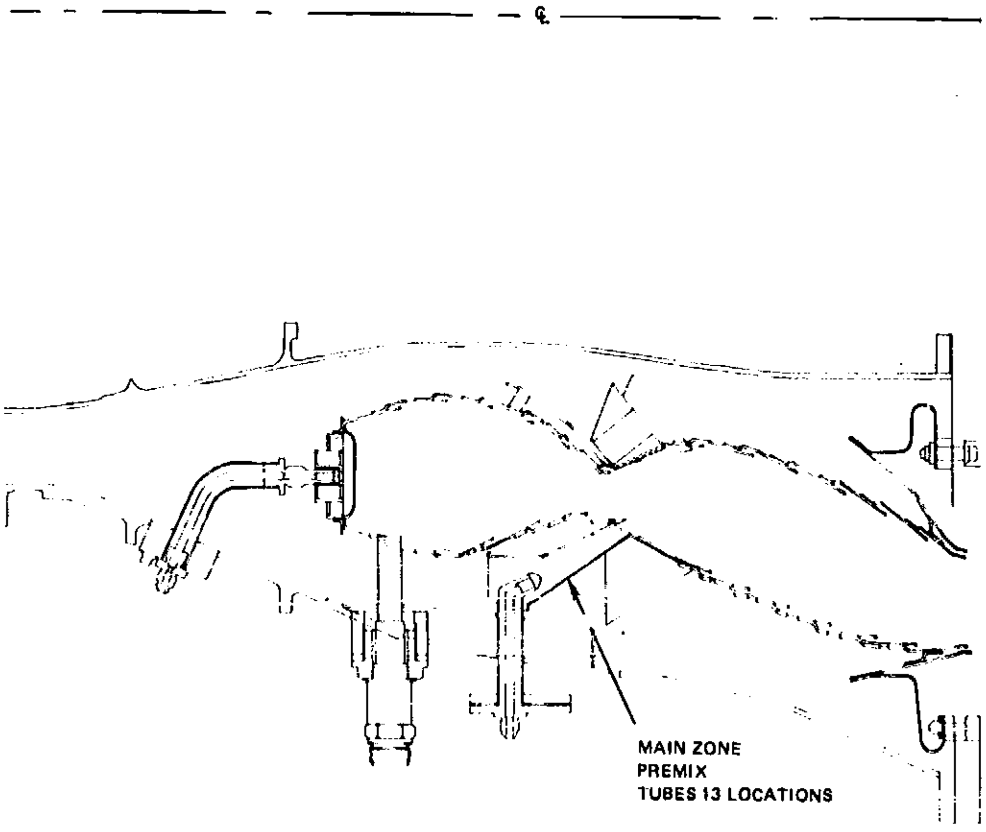

*Figure 15 Swirl Vorbix Combustor Design With Premixing Tubes*

### Main Zone Airflow Schedule

Most of the changes in main zone airflow schedule were made to adjust the exit temperature profile and pattern factor. The modifications included changes in air distribution to the swirlers and changes to the dilution flow. The dilution hole pattern was keyed to symmetrical combustor features, such as struts and fuel nozzle locations, since the air distribution developed in Phase II would be transferred to full annular hardware for Phase III.

Initially, the flows through the inner and outer liner swirlers were approximately equal, with a combined flow of 54.4 percent of the total combustor airflow. Beginning with Configuration S20, the total main zone swirl flow was reduced to approximately 45 percent and the flow split between the inner and outer swirler rows was progressively biased to provide decreasing amounts of flow through the inner swirlers. In Configuration S25, the inner swirler flow was 11.5 percent and the outer swirler flow was 25 percent. Configuration S21 employed carbureted fuel injection with 7.8 percent of the flow passing through the carburetor or premixing tube passage. Most of this flow was subtracted from the swirler flow, reducing the combined swirler flow to 38.8 percent.

No dilution flow was initially provided in the main zone. Beginning with Configuration S16 dilution flow was introduced through the main zone inner and outer liners with approximately equal amounts through each liner. This flow split was progressively modified to tailor the radial exit temperature pattern until, in Configuration S23, all of the main zone flow not passing through the swirlers was introduced through the outer liner, with a total dilution flow of 11.8 percent. In Configurations S24 and S25, the circumferential distribution of this flow was varied to tailor the circumferential temperature pattern.

## C. TEST FACILITIES AND EQUIPMENT

### 1. TEST FACILITIES

The combustor tests were conducted in two test facilities. All of the emissions and performance evaluations except for the altitude relight tests were conducted in a high-pressure test facility, Stand X-903, located at Pratt & Whitney Aircraft's Middletown, Connecticut, plant. The altitude relight testing was conducted in an altitude test facility, Stand X-306, located at the Rentschler Airport Laboratory in East Hartford, Connecticut. The capabilities of these facilities and the procedures used have been fully described in the Phase I final report, NASA CR-134736.

Two significant improvements were made to the high-pressure test facility. An automatic traversing rake system was installed to replace the fixed rakes for gas sampling, and a chemilumensence analyzer for oxides of nitrogen was added to the exhaust gas instrumentation.

The Phase I traversing rake was modified to include provisions for automated sequencing, incorporation of a removable thermocouple rake head, and thermocouple air cooling. The automated sequencing system was specifically designed for compatibility with the gas analysis instrumentation response time to ensure accurate sampling. The rake head, which is shown in Figures 16 and 17, was split into two sections to permit rapid replacement of either head section. In addition, a platinum-rhodium air supply manifold was incorporated to provide air cooling of the thermocouples when temperature data were not being taken. This system was effective in protecting the thermocouples when local temperatures exceeded the limits of the thermocouples.

The chemilumensence analyzer became the primary measuring system for the Phase II program. The Phase I nondispersive infrared and nondispersive ultraviolet systems were retained as backup systems and for measuring concentrations of NO and $NO_2$, respectively.

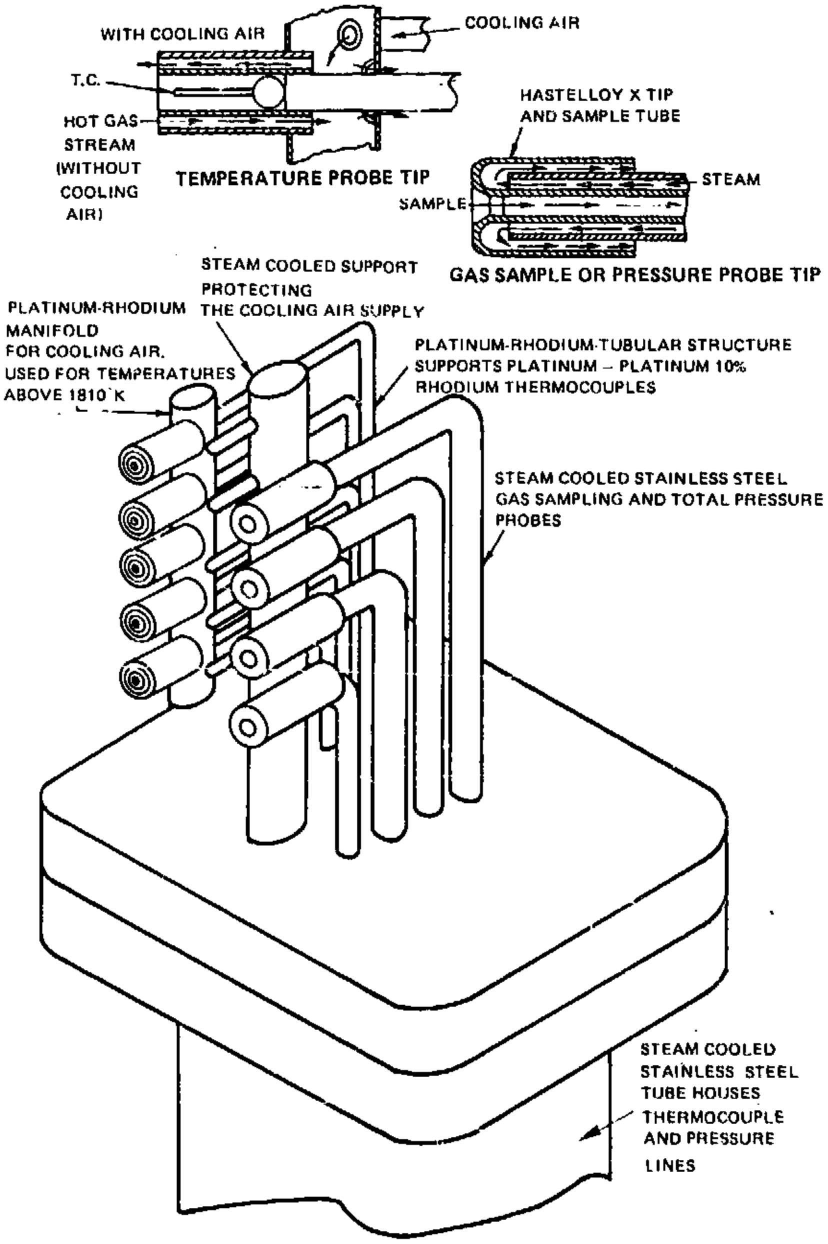
WITH COOLING AIR
COOLING AIR
T.C.
HOT GAS STREAM (WITHOUT COOLING AIR)
TEMPERATURE PROBE TIP
HASTELLOY X TIP AND SAMPLE TUBE
STEAM
SAMPLE
GAS SAMPLE OR PRESSURE PROBE TIP
STEAM COOLED SUPPORT PROTECTING THE COOLING AIR SUPPLY
PLATINUM-RHODIUM MANIFOLD FOR COOLING AIR. USED FOR TEMPERATURES ABOVE 1810°K
PLATINUM-RHODIUM-TUBULAR STRUCTURE SUPPORTS PLATINUM – PLATINUM 10% RHODIUM THERMOCOUPLES
STEAM COOLED STAINLESS STEEL GAS SAMPLING AND TOTAL PRESSURE PROBES
STEAM COOLED STAINLESS STEEL TUBE HOUSES THERMOCOUPLE AND PRESSURE LINES

*Figure 16 Detailed View of Combustor Exit Annular Traversing Rake*

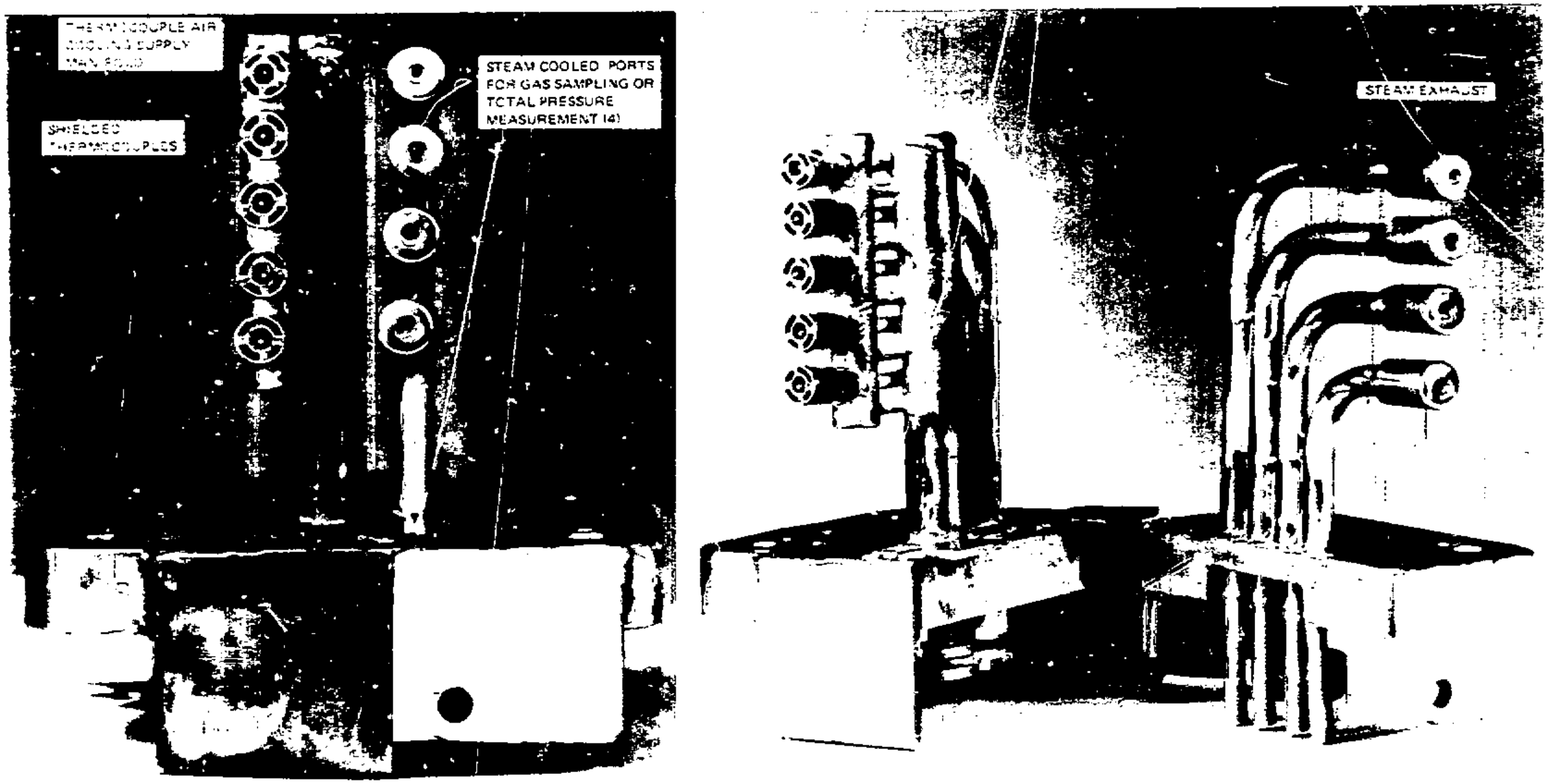
THERMOCOUPLE AIR COOLING SUPPLY MANIFOLD
SHIELDED THERMOCOUPLES
STEAM COOLED PORTS FOR GAS SAMPLING OR TOTAL PRESSURE MEASUREMENT (4)
STEAM EXHAUST

EXHAUST GAS TRAVERSE RAKE HEAD

*Figure 17 Combustor Exit Annular Traversing Rake Head Showing Disassembly of Thermocouple Head From Gas Sampling Head (XPN-55857/XPN-55864)*

## 2. TEST RIGS

A schematic diagram of a test rig and adapting hardware installed in the test facility is shown in Figure 18. The rigs used for Phase II were essentially the same as those used in Phase I. Each rig consisted of a 90-degree sector simulating a full annular combustor.

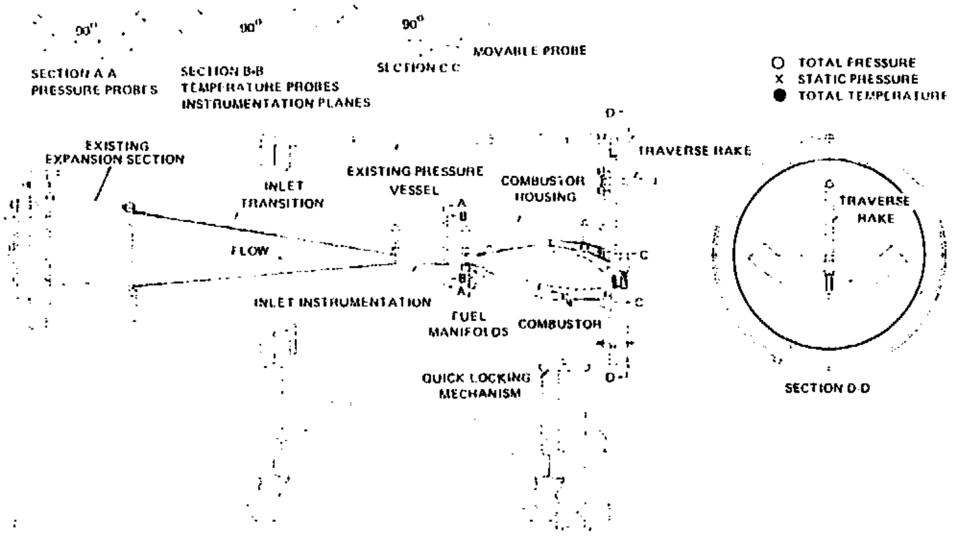
90°
90°
90°
MOVABLE PROBE
SECTION A-A
PRESSURE PROBES
SECTION B-B
TEMPERATURE PROBES
INSTRUMENTATION PLANES
SECTION C-C
○ TOTAL PRESSURE
× STATIC PRESSURE
● TOTAL TEMPERATURE
D
EXISTING EXPANSION SECTION
TRAVERSE RAKE
EXISTING PRESSURE VESSEL
INLET TRANSITION
COMBUSTOR HOUSING
A
B
FLOW
C
B
A
INLET INSTRUMENTATION
C
FUEL MANIFOLDS
COMBUSTOR
QUICK LOCKING MECHANISM
D
TRAVERSE RAKE
SECTION D-D

*Figure 18 Schematic Diagram of Test Rig Installed in the Test Facility*

The combustor cases for the test rigs duplicated the JT9D-7 engine diffuser and combustor case design as well as the diffuser strut orientation. The combustor cases for the Vorbix combustor were the same as those used in the Phase I program while the combustor cases for the Hybrid combustor were provided by modifying the Phase I premix combustor cases. The modifications consisted of changing the main fuel nozzle bosses to accommodate the eleven main nozzles for the hybrid combustor and capping the ten premix main nozzle bosses.

The test rigs differed in two respects from those used in Phase I. First, the rear outer portion of each case was sectioned and then joined with a mechanical attachment. As shown in Figure 19, this modification improved the accessibility to the combustor for visual and borescope inspection, and also permitted rapid modifications to the rear outer liner hole patterns without requiring removal of the rig from the test stand.

The second modification was the incorporation of positive sealing at the rear liner seal. In Phase I, sliding finger seals had been used at the rear of the liners, and leakage had occurred as a result of nonuniform thermal growth. For Phase II, the rear seals were fabricated as an integral part of the rear liners, and the assembly was then bolted to the rig backplate. Radial and axial thermal growth was accommodated by deflection of the seal. A typical rear seal arrangement is shown in Figure 20.

The fuel system for the Vorbix combustor incorporated up to three separate manifolds, one for the pilot zone and two for the main zone. The two main zone manifolds permitted staging of either six, seven, or all thirteen fuel injectors.

The fuel system for the Hybrid combustor was similar to that for the Vorbix combustor, with one fuel manifold for the pilot zone and two for the main zone. The main zone manifolds were arranged to permit staging of four, seven, or all eleven fuel nozzles.

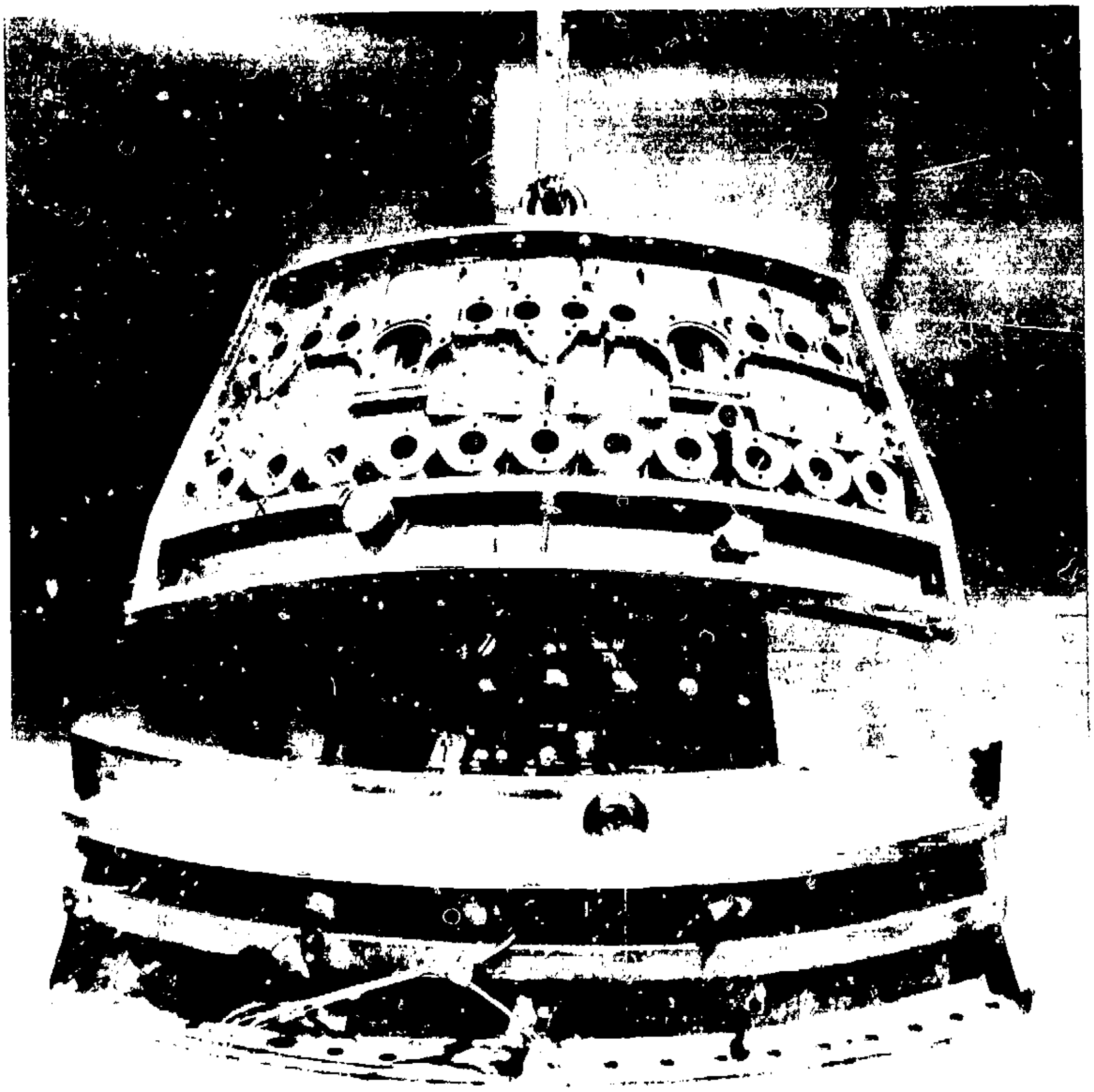

*Figure 19 Combustor Rig Outer Case Showing Sectioning to Improve Accessibility (XPN-52120)*

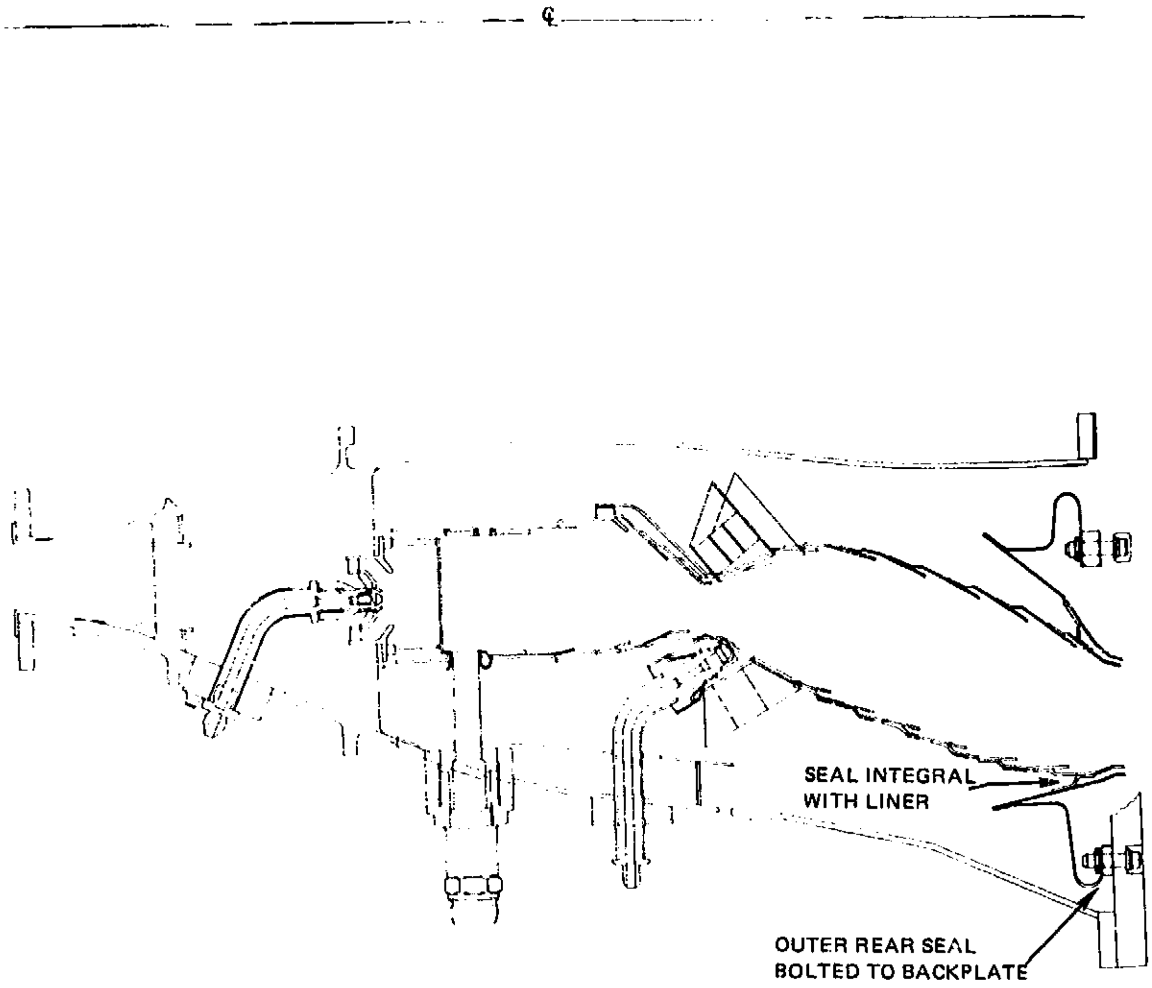

*Figure 20 Vorbix Combustor Design Showing Rear Outer Seal Arrangement*

## D. TEST CONDITIONS

### 1. HIGH-PRESSURE TEST FACILITY

The combustor rig test conditions were chosen to simulate the design table estimates of the JT9D-7 engine. Production engine performance data has verified that the design table estimates are representative of actual engine conditions. The data were taken during sea-level static production engine acceptance tests and included operation at idle, approach, climb, and take-off conditions for an uninstalled engine.

Rig test conditions are shown in Table X together with the corresponding production engine conditions. As shown, the engine idle conditions were exactly duplicated in the rig. At higher power levels, the rig duplicated all engine parameters except for the inlet pressure and airflow. The inlet pressure was limited by the test facility capabilities. The airflow was reduced accordingly to provide the engine levels of combustor reference velocity.

### TABLE X

### JT9D-7 REFERENCE ENGINE OPERATING CONDITIONS AND EXPERIMENTAL CLEAN COMBUSTOR SECTOR RIG OPERATING CONDITIONS

| | Idle With Bleed | | Idle Without Bleed | | Approach | | Climb | | Sea-Level Take-off | | Cruise | |
|---|---|---|---|---|---|---|---|---|---|---|---|---|
| | Engine | Rig | Engine | Rig | Engine | Rig | Engine | Rig | Engine | Rig | Engine | Rig |
| Compressor Exit Pressure (atm) | 2.93 | 2.93 | 3.95 | 3.94 | 8.51 | 6.79 | 18.51 | 6.79 | 21.1 | 6.79 | 9.31 | 6.79 |
| Compressor Exit Temperature (K) | 428 | 428 | 464 | 464 | 586 | 586 | 735 | 735 | 767 | 767 | 704 | 704 |
| Combustor Total Airflow (kg/s) | 16.5 | 3.90 | 23.3 | 5.5 | 45.1 | 8.07 | 85.7 | 7.19 | 94.7 | 7.01 | 91.84 | 7.14 |
| Combustor Fuel Flow (kg/s) | 0.209 | 0.049 | 0.233 | 0.055 | 0.586 | 0.105 | 1.663 | 0.139 | 2.035 | 0.151 | 0.856 | 0.146 |
| Fuel-Air Ratio | 0.0126 | 0.0126 | 0.010 | 0.010 | 0.013 | 0.013 | 0.0194 | 0.0194 | 0.0215 | 0.0215 | 0.0205 | 0.0205 |
| Reference Velocity (m/s) | | | | | | | | | | | | |
| Hybrid | 18.3 | 18.3 | 20.6 | 20.6 | 23.3 | 23.3 | 25.5 | 25.5 | 25.8 | 25.8 | 23.8 | 23.8 |
| Vorbix | 32.0 | 32.0 | 35.9 | 35.9 | 40.7 | 40.7 | 44.5 | 44.5 | 45.0 | 45.0 | 41.8 | 41.8 |
| Engine Rated Power (%) | 6.0 | — | 8.2 | — | 30 | — | 85 | — | 100 | — | — | — |

Notes: All engine values based on pilot lot performance.

Engine cruise values based on design table estimates for cruise at 10668 meters at Mach 0.9 on a standard day.

ORIGINAL PAGE IS
OF POOR QUALITY

The test rigs incorporated shroud bleeds to simulate bleed flow to meet turbine cooling requirements. The bleeds used in the rig duplicated those required in the engine, thereby providing representative shroud airflow characteristics and combustor pressure loss levels in the rig.

In addition to the tests conducted at simulated engine conditions, tests were conducted with parametric variations of overall fuel-air ratio at all simulated engine operating conditions. Parametric variations of inlet temperature and reference velocity were also made for selected combustor configurations.

The test program included main burner fuel staging tests for all configurations at simulated sea-level take-off conditions. In addition, circumferential staging was evaluated for selected configurations at the approach and take-off test conditions.

## 2. ALTITUDE TEST FACILITY

Altitude stability and windmilling starting tests were conducted at simulated JT9D-7 engine windmilling conditions. Actual engine combustor inlet and pressure conditions were simulated while fuel flow and airflow levels were scaled for the one-quarter sector rig. The range of conditions that were simulated are shown in Figure 21 together with a typical JT9D engine relight envelope.

The windmilling starting tests conducted in the combustor rig were made at stabilized conditions while the engine is required to relight immediately after a blowout with the combustor and fuel system still warm. As a result, the limits demonstrated in the rig are conservative relative to the relight capability at actual engine conditions following blowout.

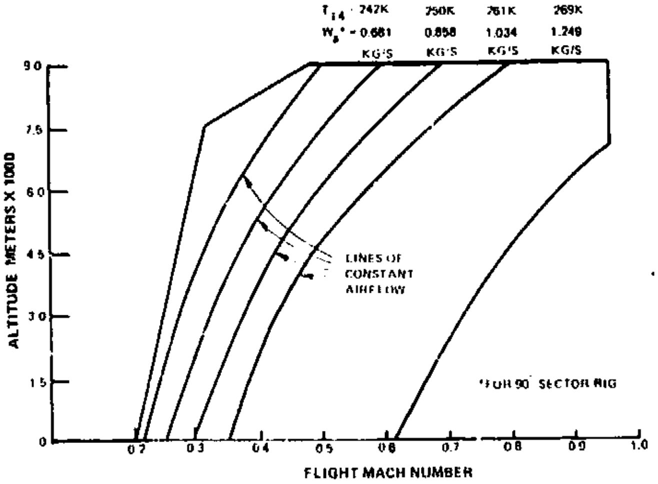

*Figure 21 JT9D Relight Envelope*

## E. DATA ANALYSIS PROCEDURES

### 1. PERFORMANCE DATA

Measured and calculated combustor performance parameters are listed in Table XI and defined below.

TABLE XI

SUMMARY OF REPORTED COMBUSTOR PERFORMANCE PARAMETERS

| Parameter | Symbol | Units | Measured | Calculated |
|---|---|---|---|---|
| Total Airflow | $W_{a4}$ | kg/s | X | |
| Total Combustor Airflow | $W_{ab}$ | kg/s | | X |
| Pilot Fuel Flow | $W_{f\ pri}$ | kg/s | X | |
| Main Fuel Flow | $W_{f\ sec}$ | kg/s | X | |
| Total Fuel Flow | $W_{f\ tot}$ | kg/s | X | |
| Fuel Temperature | $T_{fuel}$ | K | X | |
| Inlet Total Temperature | $T_{t4}$ | K | X | |
| Inlet Total Pressure | $P_{t4}$ | atm | X | |
| Reference Velocity | $V_{ref}$ | m/s | | X |
| Pattern Factor | PF | — | | X |
| Inlet Air Humidity | H | $gH_2O$/kg air | X | |
| Fuel-Air Ratio | f/a | — | | X |

**Total Combustor Airflow**

The total combustor airflow is calculated by subtracting the measured inner and outer turbine cooling air bleed flows and the estimated combustor liner sidewall cooling airflow from the total airflow.

**Reference Velocity**

The reference velocity is defined as that flow velocity that would result if the total combustor airflow, at the compressor discharge temperature and static pressure, were passed through the combustor liner at the maximum cross-sectional area. This area is 0.098 $m^2$ for the Hybrid combustor sector rig and 0.056 $m^2$ for the Vorbix combustor sector rig.

**Pattern Factor**

The pattern factor at the combustor exit is defined by the expression:

$$\text{Pattern Factor} = \frac{T_{t5\ max} - T_{t5\ avg.}}{T_{t5\ avg.} - T_{t4}}$$

where:

$T_{t5\ max}$ = Highest local temperature observed at the combustor exit plane

$T_{t5\ avg}$ = Average combustor exit temperature (calculated from the carbon-balance fuel-air ratio and the corresponding combustor inlet temperature and pressure)

$T_{t4}$ = Combustor inlet temperature

### Fuel-Air Ratio

The fuel-air ratio is the ratio of fuel flow to total combustor airflow. Fuel-air ratio was calculated from measured values of total fuel flow and airflow. The independent fuel-air ratios for the pilot and main zones were determined by dividing the total fuel-air ratio in proportion to the measured fuel flow rates to each of the burners. Hence, the sum of the pilot and main zone fuel-air ratios equals the total fuel-air ratio.

## 2. EMISSION DATA

### a. Fuel-Air Ratio Calculations

Fuel-air ratios are reported on the basis of measured fuel and air flows (performance basis). This differed from Phase I where the carbon balance technique was used as the basis for the reported data. The change was made possible by the addition of the automated traverse rake and by the use of data obtained between the diffuser strut projections where average values can be obtained free from sidewall effects. In analyzing the data, emission indices were calculated using the local carbon-balance fuel-air ratios, and correlations were then made using overall average fuel-air ratios calculated on the performance basis.

### b. Combustion Efficiency

The combustion efficiency was calculated on a deficit basis using the measured concentrations of carbon monoxide and total unburned hydrocarbons from the gas sample data. The calculation was based on the assumption that the total concentration of unburned hydrocarbons could be assigned the heating value of methane ($CH_4$). The equation was

$$\eta_c = 100 - 100\left[\frac{4343x + 21500y}{18.4\,(10)^6}\right]$$

where:

x = Measured carbon monoxide concentration in g/kg fuel

y = Measured total unburned hydrocarbon concentration in g/kg fuel

### c. Extrapolation of Rig Data to Engine Conditions

Since the combustor sector rig was unable to simulate the combustor inlet pressure at conditions above idle, the emissions data for oxides of nitrogen, carbon monoxide, and total unburned hydrocarbons obtained at the rig test conditions required correction to the engine conditions to permit comparison of the results with both the Experimental Clean Combustor Program goals and with the current JT9D-7 emission levels. The correlations used are described in the following paragraphs.

#### Correlation for Oxides of Nitrogen

Oxides of nitrogen are reported as equivalent $NO_2$.

The correlation used to scale oxides of nitrogen values to engine pressure levels and to correct the values for small differences between the actual rig conditions and the desired engine conditions is as follows:

$$NO_{x\ \mathrm{corr.}} = \left(NO_{x\ \mathrm{meas.}}\right)\left(\frac{P_{t4\ \mathrm{corr.}}}{P_{t4\ \mathrm{meas.}}}\right)^{0.5}\left(\frac{V_{\mathrm{ref.\ meas.}}}{V_{\mathrm{ref.\ corr.}}}\right)\left(\frac{T_{t5\ \mathrm{corr.}}}{T_{t5\ \mathrm{meas.}}}\right)\left(e^{18.8\,(H_{\mathrm{meas.}} - H_{\mathrm{corr.}})}\right)\left(e^{\left[\frac{T_{t4\ \mathrm{corr.}} - T_{t4\ \mathrm{meas.}}}{288}\right]}\right)$$

where:

$NO_x$ = Emission index of oxides of nitrogen.

$P_{t4}$ = Inlet total pressure (atm)

$T_{t4}$ = Inlet total temperature (K)

$V_{\mathrm{ref.}}$ = Reference velocity (m/s)

$H$ = Inlet specific humidity (g $H_2O$/kg air)

$T_{t5}$ = Combustor exit temperature

and subscripts:

corr. = Relates to value at corrected condition

meas. = Relates to value at measured condition

In this program, this correlation was used to extrapolate the experimental data to the conditions shown in Table X. It could also be used to extrapolate the experimental data to other conditions of inlet pressure, temperature, fuel-air ratio, reference velocity, and humidity. However, the correlation factors for inlet temperature and fuel-air ratio are sensitive to the specific combustor design features, particularly to the equivalence ratio in the burning zone. Consequently, use of this correlation was restricted to relatively small adjustments.

### Correlations for Carbon Monoxide and Total Unburned Hydrocarbons

Total unburned hydrocarbons are reported as equivalent $CH_4$.

Emission indices for carbon monoxide and total unburned hydrocarbons were scaled to engine pressure levels by scaling inversely to inlet pressure. This correlation has been used successfully to reduce data scatter in production JT9D-7 engine carbon monoxide and unburned hydrocarbon data, as discussed in Reference 2.

### d. Calculation of EPAP Values (Class T2)

Values for the Environmental Protection Agency Parameter (EPAP) were calculated on the basis of the emission indices extrapolated to engine conditions. The parameter is defined as follows:

$$\mathrm{EPAP} = \frac{\sum_{i}^{4} \mathrm{EI}_i \, W_{fi} \, \mathrm{TIM}_i}{\sum_{i}^{4} F_{N_i} \, \mathrm{TIM}_i}$$

where:

$\mathrm{EI}$ = Emissions index

$W_f$ = Fuel flow

$\mathrm{TIM}$ = Time in mode

$i$ = Mode index

$F_N$ = Net thrust

The mode indices and times in each mode are defined in Table XII.

Since the fuel flow, time in mode, and net thrust for the JT9D-7 engine are all known for each operating condition, the calculations for this program were simplified by defining coefficients combining these terms for each operating condition. These coefficients were defined as:

$$\mathrm{EPAP\ Coefficient}_c = \frac{W_{fc} \, \mathrm{TIM}_c}{\sum_{i}^{4} F_{Ni} \, \mathrm{TIM}_i}$$

where c denotes the operating condition for the particular coefficient. The resulting values for the coefficients are presented in Table XII. With these coefficients, EPAP values could be calculated by multiplying the emission indices for each operating condition by the appropriate coefficient and summing.

### TABLE XII

### DEFINITION OF EPAP CONDITIONS AND EPAP COEFFICIENTS FOR JT9D-7 ENGINE

| Index Number | Operating Condition | Time in Mode (Minutes) | EPAP Coefficient (lb/hr lb) |
|---|---|---|---|
| 1 | Idle | 26.0 | 0.1763 (Unbled)<br>0.1728 (Bled) |
| 2 | Approach | 4.0 | 0.0682 |
| 3 | Climb | 2.2 | 0.1065 |
| 4 | Take-off | 0.7 | 0.0414 |

# CHAPTER III

# PHASE II PROGRAM RESULTS

## A. INTRODUCTION

The following sections present emissions and performance data for both combustor concepts. The data sections are followed by a discussion of the development status of each concept and identification of the concept selected for the Phase III demonstration program. The data are the results of tests conducted on seven Hybrid and 15 Vorbix combustor configurations. The program accumulated 338.5 hours of rig testing. The emissions data except for the smoke data have been scaled from the rig test conditions to typical engine operating conditions using the procedures described in Chapter II.

## B. HYBRID COMBUSTOR

### 1. EMISSION RESULTS

#### Idle Results

The test results obtained for the Hybrid combustor configurations at idle conditions are summarized in Table XIII. Data are presented for both idle conditions (with and without simulated compressor bleed) since data were obtained at both conditions and correlation of the data to a single set of conditions was not practical. Generally, the test condition with compressor bleed would be expected to produce higher emissions since the combustor inlet pressure and temperature are lower, both of which are known to produce higher emissions, and because the fuel flow rate is lower, resulting in less effective fuel atomization.

As shown in the table, nearly all Hybrid configurations closely approached or exceeded the program idle pollutant goals. Best results at idle with bleed were achieved with Configuration H4, where carbon monoxide and total unburned hydrocarbon emission indices were 60 percent and 87.5 percent below the goal values, respectively. Best results at the unbled idle condition were achieved with Configuration H7 where the carbon monoxide and total unburned hydrocarbon emission indices were 80 percent and 28 percent below the goal values, respectively.

The tabulated data indicate significant differences in idle emissions for the different configurations. The differences appear to be related to the pilot zone equivalence ratio rather than to changes in the basic emissions characteristics. This effect can be seen in Figure 22 which is a plot of carbon monoxide emissions versus overall fuel-air ratio. This shift is particularly noticeable for Configuration H5 for which the pilot zone equivalence ratio was increased 50 percent at the design fuel-air ratio over that of the other configurations.

## TABLE XIII

## HYBRID COMBUSTOR EMISSIONS AT IDLE CONDITIONS

| Configuration | Emissions Index (g/kg fuel) Oxides of Nitrogen | Carbon Monoxide | Total Unburned Hydrocarbons | Combustion Efficiency (Percent) |
|---|---|---|---|---|
| Goal | | 20.0 | 4.0 | 99.0 |
| WITH BLEED | | | | |
| H1 | 3.1 | 12.0 | 8.0 | 98.8 |
| H2 | 3.7 | 9.0 | 0.7 | 99.7 |
| H3 | 3.4 | 10.0 | 0.4 | 99.7 |
| H4 | 3.2 | 8.0 | 0.5 | 99.8 |
| H5 | 3.7 | 17.0 | 0.5 | 99.5 |
| H6 | 3.8 | 9.0 | 4.4 | 99.3 |
| H7 | 3.3 | 44.0 | 4.1 | 98.5 |
| WITHOUT BLEED | | | | |
| H3 | 2.6 | 24.4 | 6.5 | 98.7 |
| H7 | 2.8 | 3.9 | 2.9 | 99.6 |

Notes:

With Bleed: Emissions data for oxides of nitrogen corrected to combustor inlet total temperature of 428K, inlet pressure of 2.93 atm, reference velocity of 18.3 m/s, humidity of 6.29 g/kg, and fuel-air ratio of 0.0126.

Emissions of carbon monoxide and total unburned hydrocarbons corrected to combustor inlet pressure of 2.93 atm and fuel-air ratio of 0.0126.

Efficiency based on carbon balance data.

Without Bleed: Emissions data for oxides of nitrogen corrected to combustor inlet total temperature of 464K, inlet pressure of 3.95 atm, reference velocity of 20.6 m/s, humidity of 6.29 g/kg, and fuel-air ratio of 0.010.

Emissions of carbon monoxide and total unburned hydrocarbons corrected to combustor inlet pressure of 3.95 atm and fuel-air ratio of 0.010.

Efficiency based on carbon balance data.

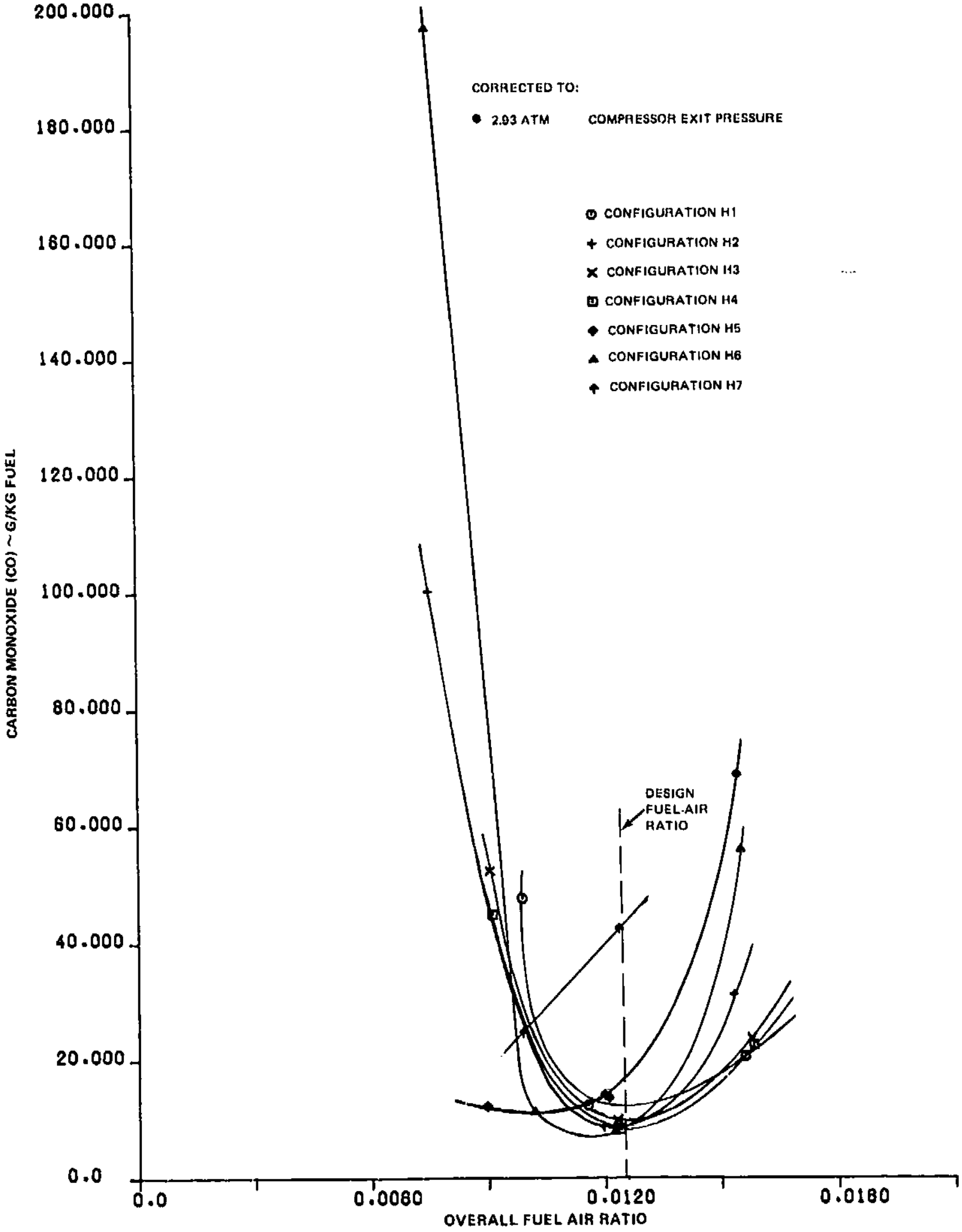

*Figure 22* *Combustor Carbon Monoxide Emission Levels as a Function of Fuel-Air Ratio at Idle Conditions With Bleed*

## Take-off Results

The test results obtained at take-off conditions are presented in Table XIV. None of the configurations met the goal for oxides of nitrogen emission levels at sea-level take-off conditions. However, levels of oxides of nitrogen significantly lower than those produced by the current production JT9D-7 combustor were achieved. The best configurations demonstrated oxide of nitrogen emission levels that were approximately 60 percent lower than those produced by the current JT9D-7 combustor. These levels are still approximately 50 percent above the emission index level goal of 10.

The take-off results generally do not show significant changes in the emission levels as a result of the changes in configuration. Configuration H4 is prominant, however, with its significantly higher emissions of oxides of nitrogen. This difference was caused by an increase in main zone equivalence ratio produced by shifting the main zone outer swirler flow to the outer liner dilution holes.

Smoke numbers recorded at take-off conditions were very low, ranging from 1 to 4 for all Hybrid configurations. However, it should be noted that the absolute SAE smoke numbers reported were measured at rig pressures and were not corrected to engine pressure levels.

TABLE XIV

HYBRID COMBUSTOR EMISSIONS AT SEA-LEVEL TAKE-OFF CONDITIONS

| | | Emissions Index (g/kg fuel) | | | | |
|---|---|---|---|---|---|---|
| Configuration | Pilot Fuel-Air Ratio | Oxides of Nitrogen | Carbon Monoxide | Total Unburned Hydrocarbons | Combustion Efficiency (Percent) | Smoke Number |
| Goal | | 10.0 | | | 99.0 | 15 |
| H1 | 0.00455 | 13.89 | 15.79 | 9.40 | 98.5 | -- |
| | 0.00560 | 14.92 | 10.65 | 6.14 | 99.0 | -- |
| | 0.00681 | 16.28 | 2.12 | 2.01 | 99.7 | -- |
| H2 | 0.00435 | 18.59 | 19.36 | 6.09 | 98.8 | - |
| | 0.00553 | 17.90 | 3.95 | 0.20 | 99.9 | 1 |
| | 0.00791 | 14.61 | 3.38 | 0.17 | 99.9 | -- |
| H4 | 0.00541 | 24.98 | 8.64 | 0.83 | 99.7 | -- |
| | 0.00731 | 24.52 | 1.37 | 0 | 100.0 | - |
| | 0.00968 | 24.59 | 0.75 | 0 | 99.9 | -- |
| H5 | 0.000329 | 16.61 | 23.04 | 16.37 | 97.5 | - |
| | 0.00523 | 17.69 | 4.20 | 0.32 | 99.9 | - |
| | 0.00970 | 25.88 | 5.40 | 0.61 | 99.8 | |
| H6 | 0.00223 | 22.02 | 16.31 | 8.63 | 98.6 | |
| | 0.00306 | 20.05 | 20.28 | 13.47 | 97.9 | 4 |
| | 0.00443 | 19.06 | 15.53 | 3.67 | 99.2 | 2 |
| | 0.00759 | 16.57 | 5.68 | 0.69 | 99.8 | |
| H7 | 0.00765 | 16.32 | 4.62 | 0.36 | 99.8 | |
| | 0.00931 | 18.58 | 6.52 | 0.69 | 99.8 | |

Notes: Emissions data for oxides of nitrogen corrected to combustor inlet total temperature of 767K, inlet pressure of 21.09 atm, reference velocity of 25.8 m/s, humidity of 6.29 g/kg, and combustor exit total temperature of 1486K (overall fuel-air ratio of 0.0215).

Emissions of carbon monoxide and total unburned hydrocarbons corrected to combustor inlet pressure of 21.09 atm.

Efficiency based on carbon balance data.

## Approach Results

The results obtained at simulated approach conditions are tabulated in Table XV. These results showed that the lowest emissions at approach conditions were obtained with fuel supplied only to the pilot zone. With fuel supplied to both the pilot and main zones, high emissions of carbon monoxide and unburned hydrocarbons resulted, although the emissions of oxides of nitrogen were somewhat lower than when only the pilot zone was used. Supplying fuel to the main zone only produced lower emissions of carbon monoxide and unburned hydrocarbons than obtained when both zones were used, but the results were not as good as those obtained with fuel supplied only to the pilot zone. Selected configurations were tested with fuel supplied to only a portion of the main injectors, and in all cases, efficiency improved as the number of main nozzles fueled was reduced.

TABLE XV

HYBRID COMBUSTOR EMISSIONS AT APPROACH CONDITIONS

| | | | Emissions Index (g/kg fuel) | | | | |
|---|---|---|---|---|---|---|
| Configuration | Pilot Fuel-Air Ratio | Main Burner Fuel-Air Ratio | Oxides of Nitrogen | Carbon Monoxide | Total Unburned Hydrocarbons | Combustion Efficiency (Percent) |
| H2 | 0.01039 | 0.00280 | 4.18 | 34.56 | 229.20 | 72.7 |
| | 0.00683 | 0.00671 | 2.09 | 88.92 | 239.03 | 70.3 |
| H3 | 0.01319 | 0 | 8.72 | 1.50 | 0.95 | 99.9 |
| H3 - 11 main injectors | 0 | 0.01352 | 7.75 | 10.57 | 1.59 | 99.6 |
| H3 - 7 main injectors | 0 | 0.01349 | 7.13 | 9.19 | 0.32 | 99.7 |
| H4 - 4 main injectors | 0 | 0.01341 | 6.51 | 41.27 | 1.35 | 98.9 |
| H4 | 0.01381 | 0 | 9.34 | 1.71 | 0.41 | 99.9 |
| H5 | 0.01325 | 0 | 12.01 | 1.13 | 1.45 | 99.8 |
| H5 - 11 main injectors | 0 | 0.01354 | 3.61 | 98.94 | 76.56 | 88.8 |
| H5 - 7 main injectors | 0 | 0.01338 | 5.53 | 65.93 | 63.02 | 91.2 |
| H5 - 4 main injectors | 0 | 0.01280 | 6.55 | 59.31 | 38.86 | 94.1 |
| H6 | 0.00690 | 0.00697 | 3.75 | 76.64 | 66.42 | 90.5 |
| | 0.00480 | 0.00878 | 1.52 | 64.56 | 551.45 | 34~~.75~~ |
| H7 | 0.01338 | 0 | 9.90 | 23.88 | 0.72 | 99.4 |

Notes: Emissions data for oxides of nitrogen corrected to combustor inlet total temperature of 586 K, inlet pressure of 8.51 atm, reference velocity of 23.3 m/s, humidity of 6.29 g/kg, and combustor exit total temperature of 1062K.

Emissions of carbon monoxide and total unburned hydrocarbons corrected to combustor inlet pressure of 8.51 atm.

Efficiency based on carbon balance data.

This behavior is related to the narrow stability limits of the pilot and main zones of the Hybrid combustor and to the relatively severe operating conditions at approach. At these conditions, the overall fuel-air ratio is too low to permit simultaneous efficient operation of both stages.

This result is unfortunate from an operational standpoint since it would require staging of the main zone during engine acceleration for a missed approach, thereby increasing the engine-acceleration time from the approach condition.

### Climb Results

The test results obtained at simulated climb conditions are shown in Table XVI. These data were obtained at fuel splits that provided acceptable efficiency levels at take-off conditions.

At climbout, combustion efficiencies were generally over 99.5 percent with oxides of nitrogen levels reduced 66 percent relative to the current production JT9D-7 levels.

TABLE XVI

HYBRID COMBUSTOR EMISSIONS AT CLIMB CONDITIONS

| Configuration | Pilot Fuel-Air Ratio | Emissions Index (g/kg fuel)<br>Oxides of Nitrogen | Carbon Monoxide | Total Unburned Hydrocarbons | Combustion Efficiency (Percent) |
|---|---|---|---|---|---|
| H2 | 0.00721 | 10.35 | 10.46 | 1.29 | 99.6 |
| H4 | 0.00515 | 21.75 | 29.56 | 29.34 | 95.9 |
|  | 0.00607 | 18.81 | 33.56 | 35.05 | 95.2 |
|  | 0.00747 | 16.42 | 39.77 | 40.87 | 94.3 |
| H5 | 0.00518 | 9.89 | 12.26 | 1.47 | 99.5 |
| H6 | 0.00757 | 12.22 | 11.24 | 1.36 | 99.6 |
| H7 | 0.00756 | 14.17 | 11.24 | 1.55 | 99.6 |

Notes: Emissions data for oxides of nitrogen corrected to combustor inlet total temperature of 735K, inlet pressure of 18.51 atm, reference velocity of 25.5 m/s, humidity of 6.29 g/kg, and combustor exit total temperature of 1396 K.

Emissions of carbon monoxide and total unburned hydrocarbons corrected to combustor inlet pressure of 18.51 atm.

Efficiency based on carbon balance data.

### Cruise Results

Emission data were recorded at simulated altitude cruise conditions for selected configurations because of recent concern with the effects of pollutants released by aircraft engines in the stratosphere. The emission data are presented in Table XVII.

## TABLE XVII

## HYBRID COMBUSTOR EMISSIONS AT CRUISE CONDITIONS

| Configuration | Pilot Fuel-Air Ratio | Emissions Index (g/kg fuel) Oxides of Nitrogen | Emissions Index (g/kg fuel) Carbon Monoxide | Emissions Index (g/kg fuel) Total Unburned Hydrocarbons | Combustion Efficiency (Percent) |
|---|---|---|---|---|---|
| JT9D-7* | – | 22.2 | 1.0 | 0.2 | – |
| H6 | 0.00768 | 7.89 | 23.93 | 4.26 | 98.9 |
| H7 | 0.00762 | 9.54 | 28.52 | 4.11 | 98.8 |

Notes: *Estimated values

Emissions data for oxides of nitrogen corrected to combustor inlet total temperature of 704 K, inlet pressure of 9.31 atm, reference velocity of 23.8 m/s, humidity of 6.29 g/kg, and combustor exit total temperature of 1413 K.

Emissions of carbon monoxide and total unburned hydrocarbons corrected to combustor inlet pressure of 9.31 atm.

Efficiency based on carbon balance data.

Best results were achieved with Configuration H6 where combustion efficiency was 98.9 percent and the emissions of oxides of nitrogen were reduced 64 percent relative to the current production JT9D-7 estimated level.

### EPAP Results

The emission results for idle, approach, climb, and take-off conditions were used to calculate EPAP values for each configuration for which sufficient data were available, and the results are presented in Tables XVIII and XIX. The emission levels used in the calculations were selected from test data curves to provide the best overall emission levels when compromises between one class of emissions and another were required. The data used for the approach condition correspond to operation of the pilot only for all configurations except H2 and H6, where both zones were fueled.

As shown in Tables XVIII and XIX, the best overall results were obtained with Configuration H7. Relative to the JT9D-7 production engine EPAP values, this configuration provided a 42-percent reduction in the emissions of oxides of nitrogen, a 56-percent reduction in the emissions of carbon monoxide, and an 82-percent reduction in the emissions of unburned hydrocarbons. The improvements in carbon monoxide and total unburned hydrocarbon emissions were obtained primarily at idle conditions while the improvement in the emissions of oxides of nitrogen were obtained primarily at take-off and climb conditions. Configurations H2 and H6, which were operated staged at approach, meet the oxides of nitrogen goal at the expense of large increases in unburned hydrocarbons and carbon monoxide.

## TABLE XVIII

## HYBRID COMBUSTOR EPA PARAMETER EMISSIONS RESULTS

| Configuration | EPA Parameter (lbm. pollutant/1000 lbf, thrust - hr/landing-take-off cycle) Oxides of Nitrogen | Carbon Monoxide | Total Unburned Hydrocarbons | SAE Smoke Number | Idle Condition |
|---|---|---|---|---|---|
| JT9D-7 (1) | 5.9 | 8.5 | 3.9 | 4 | Without Bleed |
| Goal (2) | 3.0 | 4.3 | 0.8 | 15 | |
| H2 | 2.5 | 8.9 | 16.6 | 1 | With Bleed |
| H4 (3) | 4.5 | 4.7 | 3.2 | – | With Bleed |
| H5 (3) | 3.3 | 4.6 | 0.4 | – | With Bleed |
| H6 | 2.9 | 8.2 | 5.5 | 4 | With Bleed |
| H7 (3) | 3.4 | 10.8 | 1.0 | – | With Bleed |
| H7 (3) | 3.4 | 3.7 | 0.7 | – | Without Bleed |

Note: All data corrected to JT9D-7 engine conditions.

(1) Based on initial production test results for combustor EC 289386.

(2) 1979 EPA rule levels for class T2 engines.

(3) Pilot only fueled at the approach conditions.

## TABLE XIX

## LANDING-TAKEOFF CYCLE POINT EMISSION INDICES FOR HYBRID COMBUSTOR

| | Emissions Index (g/kg fuel) | | | | | | | | | | | | | | |
|---|---|---|---|---|---|---|---|---|---|---|---|---|---|---|---|
| | Idle (Bleed) | | | Approach | | | Climb | | | Sea-Level Take-off | | | Cruise | | |
| Configuration | Carbon Monoxide | Total Unburned Hydrocarbons | Oxides of Nitrogen | Carbon Monoxide | Total Unburned Hydrocarbons | Oxides of Nitrogen | Carbon Monoxide | Total Unburned Hydrocarbons | Oxides of Nitrogen | Carbon Monoxide | Total Unburned Hydrocarbons | Oxides of Nitrogen | Carbon Monoxide | Total Unburned Hydrocarbons | Oxides of Nitrogen |
| ECCP Goal | 20, 20* | 4.0, 4.0* | | | | | | | | | | 10.0 | | | |
| JT9D-7 Production | 46.7* | 21.6* | 3.9* | 3.5 | 0.7 | 7.8 | 0.5 | 0.4 | 28.8 | 0.4 | 0.4 | 39.9 | 1.0† | 0.2† | 22.2† |
| H1 | 12.0 | 8.0 | 3.1 | | | | | | | 2.12 | 2.01 | 16.28 | | | |
| H2 | 9.0 | 0.7 | 3.7 | 88.9 | 239.0 | 2.1 | 10.5 | 1.3 | 10.4 | 3.4 | 0.2 | 14.6 | | | |
| H3 | 10.0, 24.4* | 0.4, 6.5* | 3.4, 2.6* | 1.5** | 0.95** | 8.72** | | | | | | | | | |
| H4 | 8.0 | 0.5 | 3.2 | 1.7** | 0.4** | 9.3** | 29.6 | 29.3 | 21.8 | 1.4 | 0 | 24.5 | | | |
| H5 | 17.0 | 0.5 | 3.7 | 1.1** | 1.4** | 12.0** | 12.3 | 1.5 | 9.9 | 4.2 | 0.3 | 17.7 | | | |
| H6 | 9.0 | 4.4 | 3.8 | 76.6 | 66.4 | 3.8 | 11.2 | 1.4 | 12.2 | 5.7 | 0.7 | 16.6 | 23.9 | 4.3 | 7.9 |
| H7 | 44.0, 3.9* | 4.1, 2.9* | 3.3, 2.8* | 23.9** | 0.7** | 9.9** | 11.2 | 1.6 | 14.2 | 4.6 | 0.4 | 16.3 | 28.5 | 4.1 | 9.5 |

*without bleed
**pilot only fueled
†estimated value

ORIGINAL PAGE IS
OF POOR QUALITY

## 2. PERFORMANCE RESULTS

In addition to the combustor emission measurements, performance measurements were made during the Phase II program to determine pressure loss, exit temperature pattern, idle lean blowout limits, altitude stability and relight characteristics, and durability. The results of these measurements for the Hybrid combustor are summarized below.

### Pressure Loss

The measured values of the combustor, diffuser, and total combustion system pressure losses are summarized in Table XX. As shown, the Hybrid combustor generally operated close to the goal of six percent.

TABLE XX

SUMMARY OF PRESSURE LOSS TEST RESULTS
FOR HYBRID COMBUSTOR

| Configuration | Overall Pressure Loss (Percent) | Combustor Loss (Percent) | Diffuser and Shroud Loss (Percent) |
|---|---|---|---|
| Goal | 6.0 | -- | -- |
| JT9D-7 | 5.4 | -- | -- |
| H1 | 6.5 | 2.6 | 3.9 |
| H2 | 6.4 | 2.5 | 3.9 |
| H3 | 6.7 | 2.3 | 4.4 |
| H4 | 6.7 | 2.3 | 4.4 |
| H5 | 5.6 | 2.1 | 3.5 |
| H6 | 5.8 | 2.4 | 3.4 |
| H7 | 6.4 | 2.8 | 3.6 |

### Exit Temperature Data

Exit temperature traverse data were taken at idle conditions and at simulated take-off conditions. The resulting data were plotted as circumferential profiles which were then reduced to exit temperature pattern factors and average radial temperature profiles. It should be noted that the maximum allowable temperature for the traverse rake was 1800 K, which precluded the acquisition of data at the full sea-level take-off fuel-air ratio. As a result, most data taken at high power conditions were obtained at a fuel-air ratio of 0.016. For these tests, pattern factors were calculated on the basis of the maximum temperature observed with the operational thermocouples. The average combustor exit temperature was computed from the measured fuel-air ratio.

The circumferential temperature profiles for the Hybrid combustor at idle and sea-level takeoff conditions are shown in Figures 23 and 24. These profiles show regions of increased temperature in line with the diffuser struts, particularly at idle conditions. These data suggest that the sheltered regions downstream of the struts are functioning as flameholders for the pilot zone.

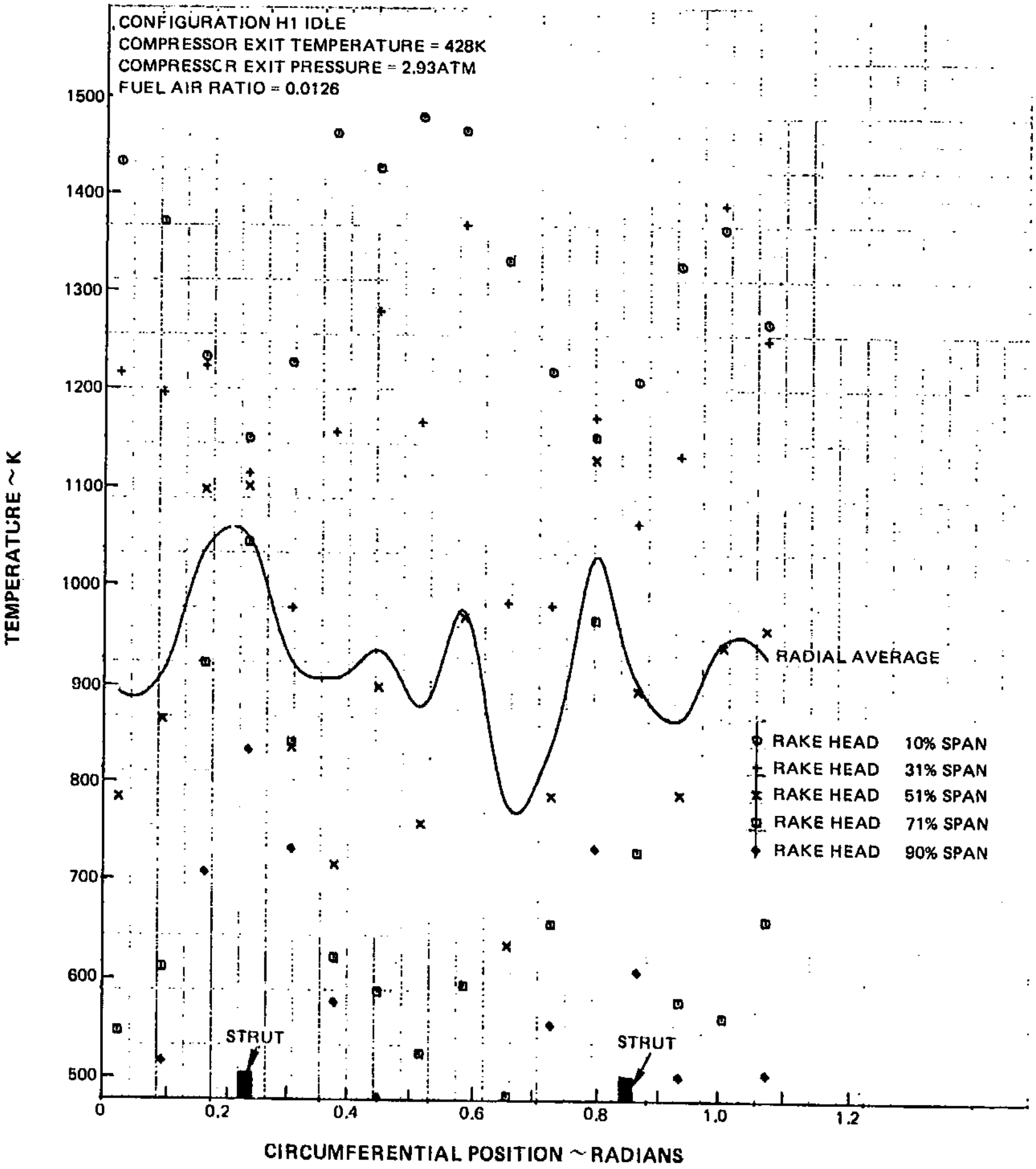

*Figure 23 Circumferential Exit Temperature Patterns for Hybrid Combustor Configuration H1 at Idle Conditions*

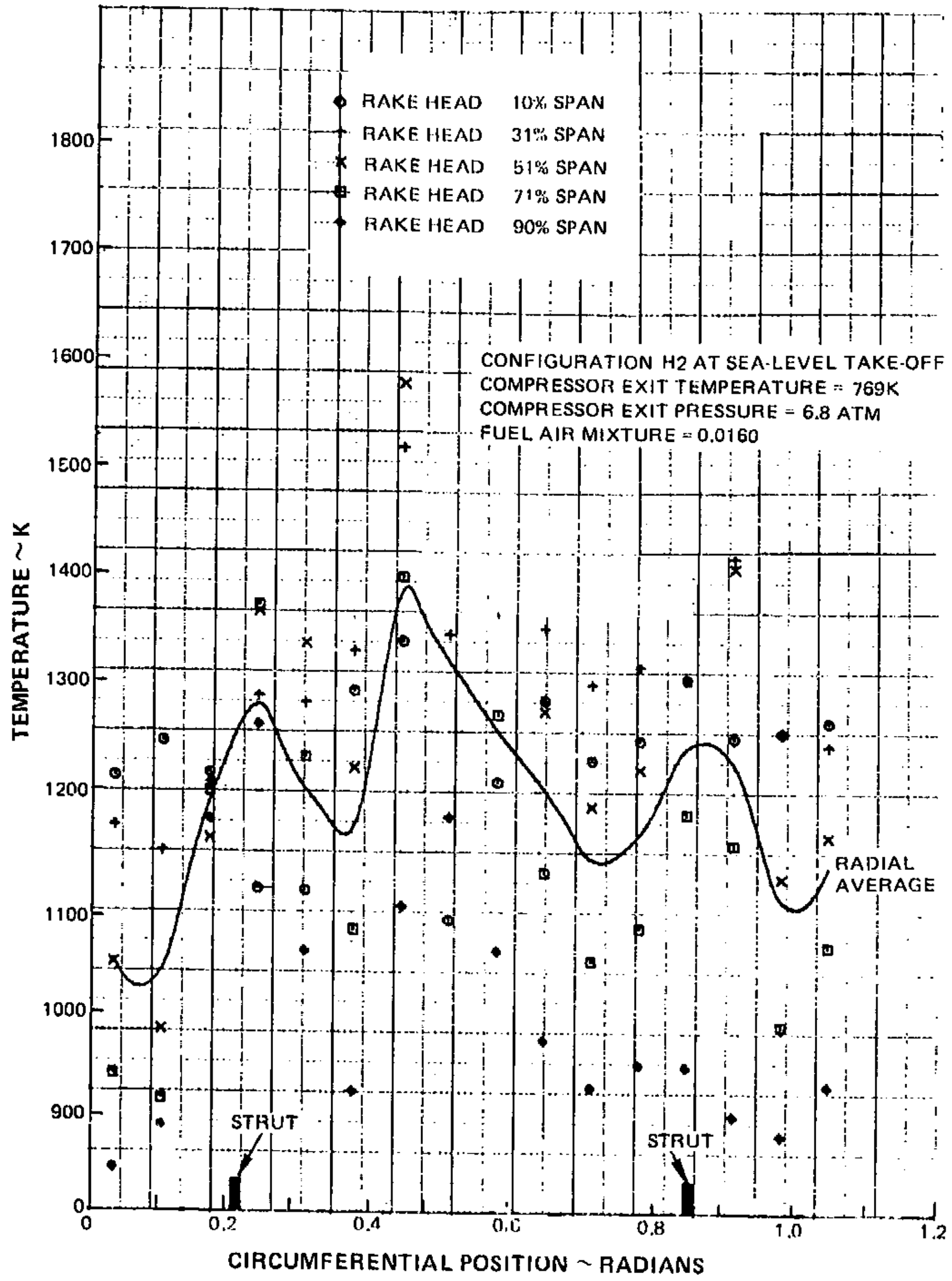

*Figure 24 Circumferential Exit Temperature Patterns for Hybrid Combustor Configuration H2 at Sea-Level Take-Off Conditions With Fuel-Air Ratio of 0.016*

As shown in Table XXI, the pattern factor values for the Hybrid combustor ranged between 0.40 and 0.47 at sea-level take-off conditions. Although these values are significantly higher than the goal of 0.25, there was no attempt made to improve the pattern factor during the Hybrid test program. Values are comparable to those for the current production JT9D-7 engine. The pattern factors for the Hybrid combustor at idle conditions are very high because of the radial staging used at idle conditions, but, since the average temperatures are low at idle conditions, the high pattern factors may not pose a turbine durability problem.

### TABLE XXI

### SUMMARY OF HYBRID COMBUSTOR EXIT TEMPERATURE PATTERN FACTOR RESULTS

| | Pattern Factor | |
|---|---|---|
| Configuration | Idle Conditions | Take-Off Conditions |
| Goal | -- | 0.25 |
| JT9D-7 | -- | 0.42 |
| H1 | 1.33 | 0.45 |
| H2 | 1.49 | 0.44 |
| H3 | 1.02 | -- |
| H4 | 1.10 | 0.47 |
| H5 | 1.84 | -- |
| H6 | 1.94 | 0.40 |
| H7 | 1.43 | -- |

A typical radial temperature profile for the Hybrid combustor at idle conditions is shown in Figure 25. The high temperatures near the inner wall of the combustor are a consequence of the pilot zone location.

At sea-level take-off conditions, the Hybrid combustor produced a radial temperature profile that approached the baseline profile for the JT9D-7 combustor, as shown in Figure 26. The temperatures are slightly higher than the baseline profile near the outer liner and slightly lower near the inner liner.

## Idle Lean Blowout Limits

Table XXII summarizes the idle lean blowout results for the Hybrid combustor. The lean blowout limits were all significantly higher than those for the JT9D-7 combustor and are unacceptable. Poor blowout characteristics are characteristic of premix type combustors.

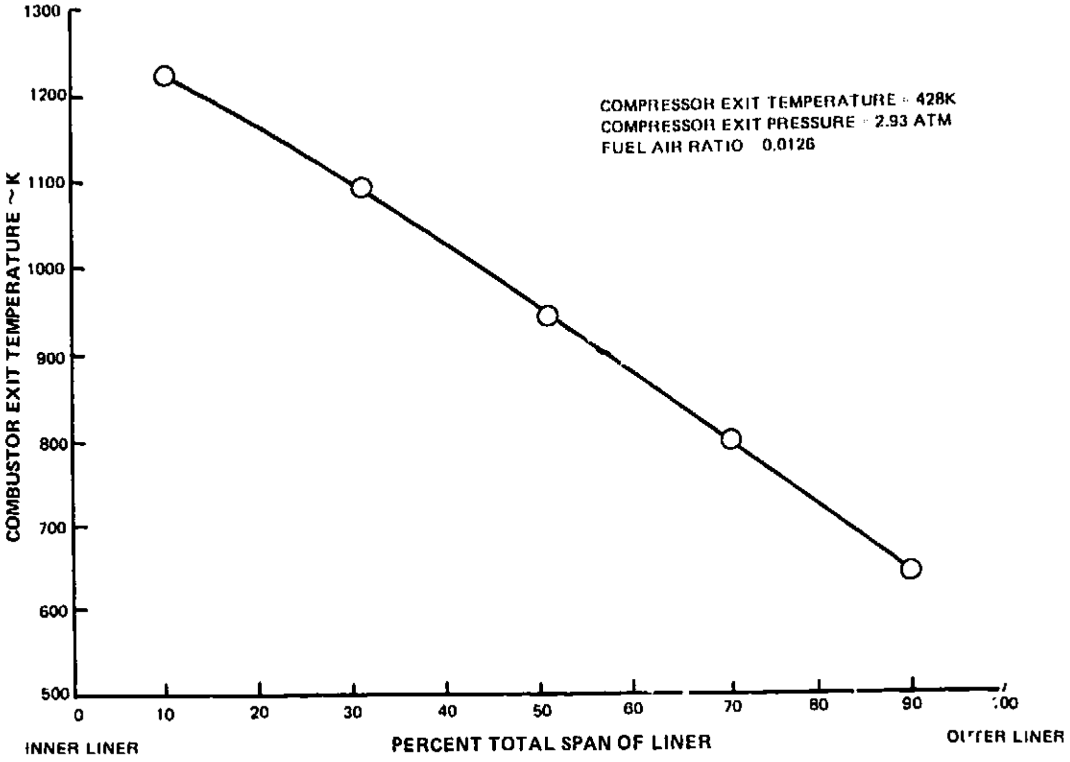

*Figure 25 Radial Exit Temperature for Hybrid Combustor Configuration H2 at Idle Conditions*

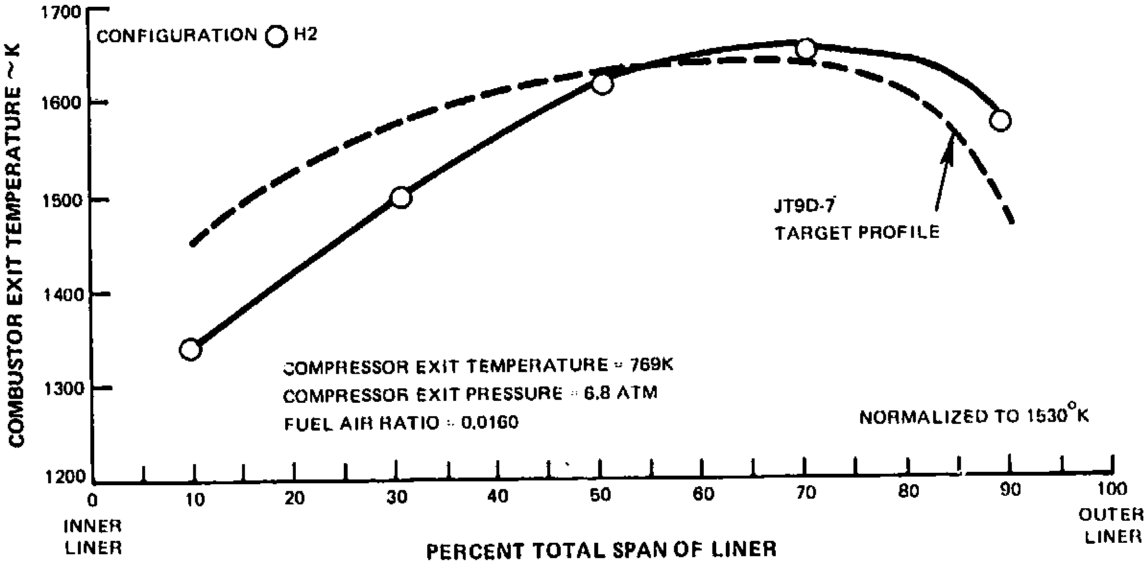

*Figure 26 Radial Exit Temperature Pattern for Hybrid Combustor Configuration H2 at Sea-Level Take-Off Conditions With Overall Fuel-Air Ratio of 0.0160 and Pilot Zone Fuel-Air Ratio of 0.0052*

## TABLE XXII

## SUMMARY OF HYBRID COMBUSTOR IDLE LEAN BLOWOUT TEST RESULTS

| Configuration | Idle Lean Blowout Fuel-Air Ratio |
|---|---|
| Goal | – – – |
| JT9D-7 | < 0.004 |
| H1 | 0.0077 |
| H6 | 0.0063 |
| H7 | 0.0067 |

Notes: Data taken with simulated compressor bleed. Nominal inlet conditions were inlet pressure of 2.93 atm and inlet temperature of 428K.

### Altitude Stability and Relight Results

Altitude stability and relight characteristics were determined for Hybrid combustor Configurations H5 and H6, and the results are shown in Figure 27. The data have been plotted on the JT9D-7 engine relight envelope for comparison purposes. The outer envelope indicates the engine requirement for relighting with a hot engine, while the rig baseline limit indicates the requirement for lighting from a cold-soak condition, which was the condition used for the Phase II combustor tests. It should be noted, however, that the minimum pressure blowout limit must exceed the hot engine relight requirement by a considerable margin if the engine is to accelerate successfully after ignition.

As indicated in Figure 27, only minimum pressure blowout data were obtained for the Hybrid combustor, since neither configuration tested could be lit at altitude conditions. Configuration H5 reached its minimum pressure blowout limit below the minimum required altitude for relight, and, therefore, has no potential for meeting the relight requirement. Configuration H6, however, demonstrated a blowout limit above the relight altitude requirement and, therefore, might be developed to meet the relight requirement through relocation of the igniter plugs or modification of the fuel spray pattern. The difference in altitude characteristics is attributed to the 50-percent leaner pilot zone equivalence ratio in Configuration H6.

### Combustor Durability

Durability problems in the Hybrid combustor were confined primarily to the pilot flameholder region. A series of modifications were made to correct the situation, and some improvement was obtained. In Configuration H2, the design of the flameholder attachment to the inner liner was modified to permit thermal expansion of the flameholder. In Configuration H5, cooling holes were added in the trailing edge of the flameholder, and in Configuration H6, cooling of the outer portion of the trailing edge of the flameholder was increased. These changes were effective in improving the durability and permitted 80 hours of testing without further modifications. However, significant deterioration still occurred, primarily in the area near the attachment of the flameholder to the inner liner. The durability of the Hybrid combustor liners and main burning zone appeared satisfactory throughout the test program.

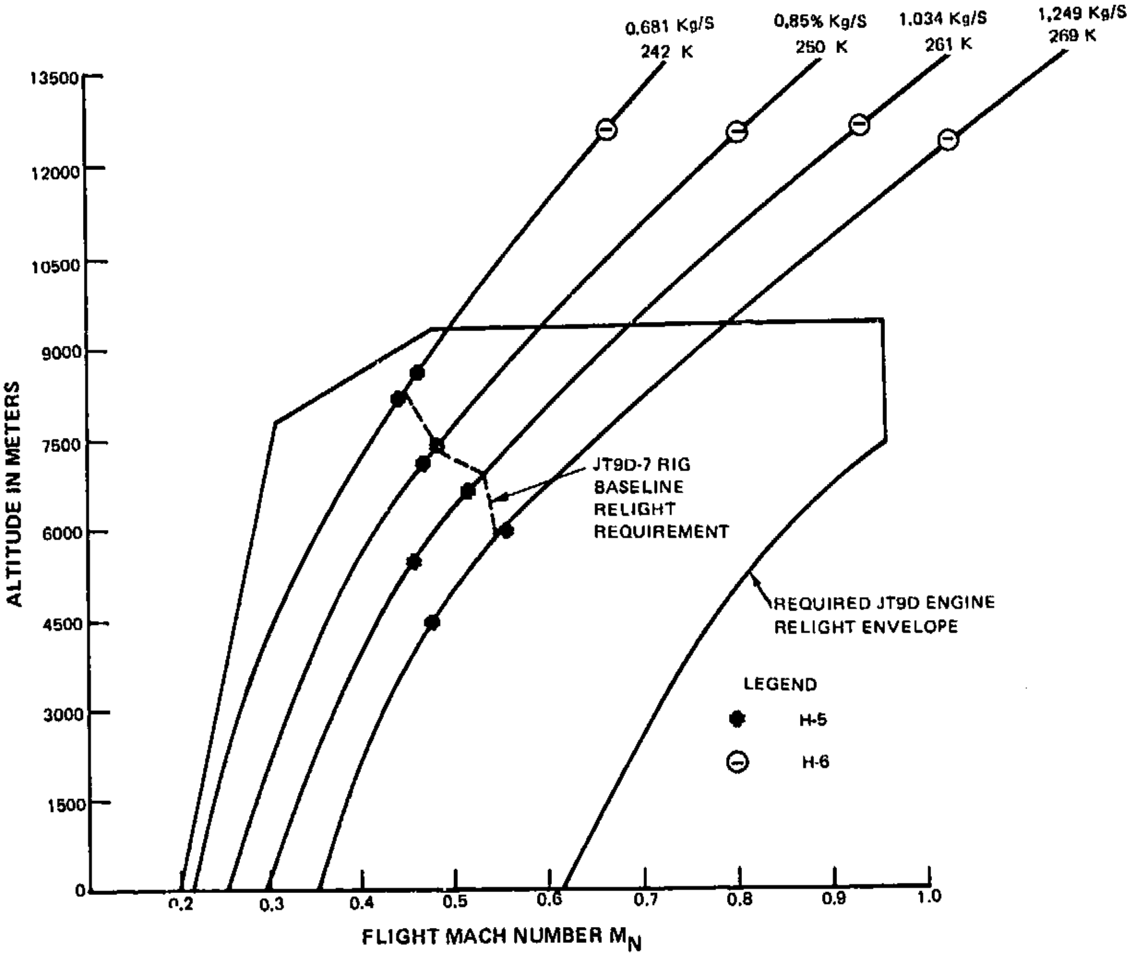

*Figure 27* *Minimum Pressure Blowout Test Results for Hybrid Combustor Shown on JT9D-7 Altitude Relight Envelope*

## C. VORBIX COMBUSTOR

### 1. EMISSION RESULTS

**Idle Results**

The emission results obtained at idle conditions are summarized in Table XXIII.

Data were obtained both with and without simulated bleed. Generally, the trends were the same for both sets of conditions for emissions of unburned hydrocarbons and oxides of nitrogen, but the emission levels for carbon monoxide were significantly lower without simulated bleed.

## TABLE XXIII. —

## VORBIX COMBUSTOR EMISSIONS AT IDLE CONDITIONS

| Configuration | Emissions Index (g/kg fuel) | | | Combustion Efficiency (Percent) |
|---|---|---|---|---|
| | Oxides of Nitrogen | Carbon Monoxide | Total Unburned Hydrocarbons | |
| Goal | | 20 | 4 | 99.0 |
| WITH BLEED | | | | |
| S11 | 3.8 | 39.0 | 1.2 | 98.9 |
| S12 | 3.4 | 37.7 | 1.7 | 98.9 |
| S13 | 3.4 | 37.7 | 1.7 | 98.9 |
| S14 | 3.4 | 37.7 | 1.7 | 98.9 |
| S15 | 3.4 | 37.7 | 1.7 | 98.9 |
| S16 | 3.2 | 61.6 | 1.0 | 98.4 |
| S17 | 2.7 | 55.3 | 1.3 | 98.5 |
| S18 | 2.9 | 69.8 | 1.1 | 98.2 |
| S19 | 2.8 | 64.8 | 0.2 | 98.4 |
| S20 | 3.1 | 46.3 | 6.2 | 98.2 |
| S21 | 2.9 | 43.0 | 2.3 | 98.7 |
| S22 | 3.1 | 54.4 | 2.8 | 98.4 |
| S23 | 3.6 | 35.2 | 1.0 | 99.1 |
| S25 | 2.9 | 40.5 | 0.5 | 99.0 |
| WITHOUT BLEED | | | | |
| S20 | 4.0 | 27.0 | 3.5 | 99.0 |
| S21 | 3.4 | 28.0 | 1.6 | 99.2 |
| S22 | 3.7 | 39.5 | 2.8 | 98.8 |
| S23 | 4.1 | 35.0 | 2.0 | 99.0 |
| S24 | 3.8 | 32.0 | 2.7 | 99.0 |
| S25 | 3.2 | 18.5 | 0.5 | 99.5 |

Notes: Emissions data for oxides of nitrogen with bleed corrected to combustor inlet total temperature of 428K, inlet pressure of 2.93 atm, reference velocity of 32.0 m/s, humidity of 6.29 g/kg, and fuel-air ratio of 0.0126.

Emissions data for oxides of nitrogen without bleed corrected to combustor inlet temperature of 464K, inlet pressure of 3.95 atm, reference velocity of 35.9 m/s, humidity of 6.29 g/kg, and fuel-air ratio of 0.0100.

Emissions of carbon monoxide and total unburned hydrocarbons corrected to combustor inlet pressure of 2.93 atm and fuel-air ratio of 0.0126 with bleed and to combustor inlet pressure of 3.95 and fuel-air ratio of 0.0100 without bleed.

Efficiency based on carbon balance data.

Generally, idle pollution results were disappointing in that carbon monoxide concentrations exceeded the goals for nearly all configurations investigated. However, the carbon monoxide goal was achieved with Configuration S25. The total unburned hydrocarbon goals were achieved with most configurations.

Attempts to reduce carbon monoxide through primary zone modifications including airflow redistributions, fuel spray modification, and volume modifications were ineffective. The lack of response of the Vorbix combustor to conventional idle emissions reduction techniques suggests that the throat region and the massive introduction of dilution airflow through the main swirlers immediately downstream of the throat were prematurely quenching the combustion gases and thus inhibiting carbon monoxide oxidation. Test results from the later Vorbix configurations, in which reduction of main swirler airflow was accompanied by reduced idle carbon monoxide levels, tend to support this conclusion.

### Take-off Results

The test data for sea-level take-off conditions is summarized in Table XXIV.

The Vorbix combustors exhibited emission levels for oxides of nitrogen that were significantly below the current JT9D-7 production combustor level. This improvement was obtained concurrently with high combustor efficiency. Several configurations approached or exceeded the goal for emissions of oxides of nitrogen.

The modifications to reduce emissions of oxides of nitrogen involved changes in swirler and dilution airflow distribution. Significant reductions in emissions were achieved, with Configuration S23 producing an emissions index for oxides of nitrogen of only 9.0 with an efficiency of 99.6 percent, surpassing the sea-level take-off emissions index goal for oxides of nitrogen of 10. Configuration S25 achieved an emissions index for oxides of nitrogen of 10.8 with an efficiency of 99.8 percent. Although the lowest emissions for this configuration were slightly higher than those for Configuration S23, the overall emissions and efficiency characteristics of Configuration S25 were superior, as shown in Figure 28.

Reducing the number of main fuel injectors by 50 percent and the use of premixing tubes were investigated, but neither produced significant reductions in the emissions of oxides of nitrogen. The premixing tubes offer potential benefits of reduced tendency for nozzle coking and relatively constant fuel spray penetration at all operating conditions, but exhibited localized durability problems. A full evaluation of the potential of the premixing tubes was not pursued in the Phase II program.

As with the Hybrid combustor, smoke levels measured at rig pressures were very low, ranging from SAE smoke numbers of 1 to 5. Configuration S12 was an exception, however, producing an SAE smoke number of 9. It should be noted that the absolute SAE smoke numbers were measured at rig pressures and were not corrected to engine pressure.

## TABLE XXIV

## VORBIX COMBUSTOR EMISSIONS AT SEA-LEVEL TAKE-OFF CONDITIONS

| Configuration | Pilot Fuel-Air Ratio | Emissions Index (g/kg fuel)<br>Oxides of Nitrogen | Carbon Monoxide | Total Unburned Hydrocarbons | Combustion Efficiency (Percent) | Smoke Number |
|---|---|---|---|---|---|---|
| Goal | | 10.0 | | | | 15 |
| S11 | 0.00359 | 14.60 | 10.70 | 0.80 | 99.7 | – – |
| | 0.00471 | 15.28 | 3.83 | 0.10 | 99.9 | – – |
| | 0.00563 | 16.09 | 2.36 | 0.03 | 99.9 | – – |
| | 0.00645 | 16.86 | 1.72 | 0.08 | 100.0 | – – |
| S12 | 0.00357 | 15.62 | 18.35 | 1.22 | 99.4 | 9 |
| | 0.00465 | 15.46 | 16.58 | 0.44 | 99.6 | – – |
| | 0.00580 | 16.85 | 12.72 | 0.34 | 99.7 | – – |
| | 0.00730 | 18.46 | 10.37 | 0.27 | 99.7 | – – |
| S13 | 0.00884 | 21.68 | 6.26 | 0.16 | 99.8 | – – |
| S14 | 0.00420 | 19.72 | 15.71 | 0.90 | 99.5 | – – |
| | 0.00579 | 21.79 | 4.91 | 0.35 | 99.8 | – – |
| | 0.00900 | 28.79 | 4.80 | 0.12 | 99.9 | – – |
| S15 | 0.00412 | 13.51 | 23.24 | 1.26 | 99.3 | – – |
| | 0.00579 | 16.07 | 19.75 | 0.71 | 99.5 | – – |
| S16 | 0.00521 | 17.57 | 8.35 | 0.16 | 99.8 | – – |
| | 0.00754 | 22.87 | 7.22 | 0.08 | 99.8 | – – |
| | 0.00970 | 22.64 | 2.75 | 0 | 99.9 | – – |
| S17 | 0.00215 | 12.87 | 26.73 | 3.52 | 98.9 | – – |
| | 0.00422 | 18.02 | 11.23 | 0.36 | 99.7 | – – |
| | 0.00542 | 19.76 | 8.10 | 0.22 | 99.8 | – – |
| | 0.00748 | 22.48 | 6.65 | 0.16 | 99.8 | – – |
| | 0.00983 | 24.71 | 3.85 | 0.07 | 99.9 | – – |
| S18 | 0.00322 | 20.32 | 11.27 | 0.26 | 99.7 | – – |
| | 0.00417 | 23.18 | 8.86 | 0.13 | 99.8 | – – |
| | 0.00534 | 25.76 | 7.36 | 0.10 | 99.8 | – – |
| | 0.00733 | 24.97 | 4.09 | 0.03 | 99.9 | – – |
| | 0.00970 | 24.09 | 2.63 | 0.02 | 99.9 | |
| S19 | 0.00776 | – – | 3.45 | 0.07 | 99.9 | |

TABLE XXIV (Cont'd)

| Configuration | Pilot Fuel-Air Ratio | Emissions Index (g/kg fuel) Oxides of Nitrogen | Carbon Monoxide | Total Unburned Hydrocarbons | Combustion Efficiency (Percent) | Smoke Number |
|---|---|---|---|---|---|---|
| S20 | 0.00224 | 13.06 | 20.63 | 4.02 | 99.0 | 4 |
| | 0.00329 | 13.79 | 13.97 | 0.62 | 99.6 | 2 |
| | 0.00445 | 14.74 | 9.99 | 0.13 | 99.7 | 4 |
| | 0.00767 | 18.09 | 3.40 | 0.03 | 99.9 | 3 |
| S21 | 0.00310 | 11.64 | 31.87 | 8.45 | 98.3 | -- |
| | 0.00414 | 14.04 | 13.93 | 0.58 | 99.6 | -- |
| | 0.00692 | 19.93 | 4.60 | 0.26 | 99.9 | -- |
| | 0.00747 | 21.28 | 3.98 | 0.13 | 99.9 | 1 |
| S22 | 0.00207 | 14.96 | 9.29 | 0.74 | 99.7 | -- |
| | 0.00306 | 15.10 | 6.40 | 0.35 | 99.8 | 1 |
| | 0.00422 | 16.26 | 4.17 | 0.26 | 99.9 | -- |
| | 0.00521 | 16.84 | 2.36 | 0 | 99.9 | -- |
| | 0.00600 | 17.67 | 1.89 | 0 | 100.0 | 1 |
| | 0.00730 | 19.18 | 1.21 | 0.03 | 100.0 | 1 |
| S23 | 0.00208 | 9.01 | 10.72 | 1.05 | 99.6 | 2 |
| | 0.00311 | 14.14 | 4.16 | 0.35 | 99.9 | 3 |
| | 0.00427 | 14.80 | 3.39 | 0.03 | 99.9 | 2 |
| | 0.00523 | 14.74 | 2.20 | 0.03 | 99.9 | 2 |
| | 0.00739 | 18.22 | 1.24 | 0.13 | 100.0 | 1 |
| S24 | 0.00228 | 13.04 | 7.26 | 0.98 | 99.7 | 3 |
| | 0.00333 | 12.94 | 4.52 | 0.29 | 99.9 | 3 |
| | 0.00458 | 13.82 | 2.59 | 0.10 | 99.9 | 5 |
| | 0.00555 | 13.82 | 1.22 | 0.10 | 100.0 | 5 |
| S25 | 0.00555 | -- | 1.39 | 0.03 | 100.0 | 2 |
| | 0.00439 | -- | 2.10 | 0.16 | 99.9 | 2 |
| | 0.00334 | 11.15 | 2.49 | 0.16 | 99.9 | 2 |
| | 0.00225 | 10.79 | 4.52 | 0.39 | 99.8 | 3 |
| | 0.00587 | 12.80 | 1.40 | 0.03 | 100.0 | -- |
| | 0.00132 | 11.49 | 7.81 | 0.94 | 99.7 | -- |

Notes: Emissions data for oxides of nitrogen corrected to combustor inlet total temperature of 767 K, inlet pressure of 21.09 atm, reference velocity of 45.0 m/s, humidity of 6.29 g/kg, and combustor exit total temperature of 1486 K.

Emissions of carbon monoxide and total unburned hydrocarbons corrected to combustor inlet pressure of 21.09 atm.

Efficiency based on carbon balance data.

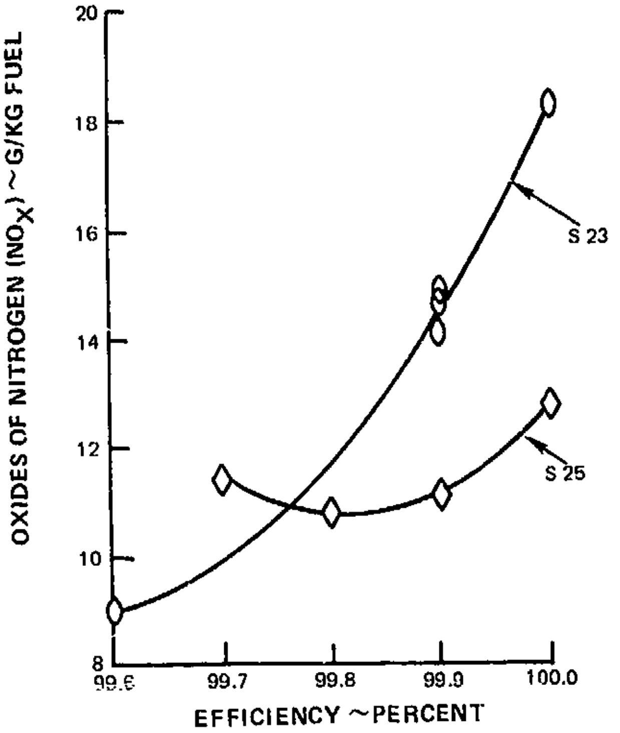

*Figure 28* *Relationship Between Emissions of Oxides of Nitrogen and Efficency for Vorbix Combustor Configurations S23 and S25*

### Approach Results

The test results obtained at approach conditions are shown in Table XXV.

Unlike the Hybrid combustor, the Vorbix combustor is capable of operating with high combustion efficiency with both the pilot and main zones fully fueled at approach.

However, the overall emissions did not compare favorably with those of the current production JT9D-7 combustor at approach conditions. Although some configurations provided emissions of oxides of nitrogen that were only one half those of the production combustor, these configurations also produced emissions of carbon monoxide that were 12 times higher than those of the production combustor. Vorbix configurations that produced emissions of oxides of nitrogen comparable to those of the production combustor produced emissions of carbon monoxide that were approximately 3 times those of the production combustor.

### Climb Results

Emissions data obtained at climb conditions are shown in Table XXVI. The data were obtained using the optimum pilot burner fuel-air ratio determined at take-off conditions.

During climb, combustion efficiencies were generally over 99.5 percent with oxides of nitrogen levels reduced 70 percent when compared to current production JT9D-7 levels.

## TABLE XXV

## VORBIX COMBUSTOR EMISSIONS AT APPROACH CONDITIONS

| Configuration | Pilot Fuel-Air Ratio | Emissions Index (g/kg fuel)<br>Oxides of Nitrogen | Carbon Monoxide | Total Unburned Hydrocarbons | Combustion Efficiency (Percent) |
|---|---|---|---|---|---|
| S11 | 0.00744 | 5.07 | 20.40 | 1.65 | 99.3 |
| | 0.00956 | 6.72 | 11.21 | 0.44 | 99.7 |
| S12 | 0.01300 | 9.97 | 6.01 | 0.30 | 99.8 |
| S17 | 0.01358 | 4.60 | 12.48 | 0.32 | 99.7 |
| S18 | 0.00265 | 3.61 | 54.19 | 33.40 | 94.8 |
| | 0.00547 | 7.04 | 20.76 | 1.53 | 99.3 |
| | 0.00808 | 7.08 | 15.50 | 0.32 | 99.6 |
| | 0.01070 | 6.05 | 15.34 | 1.14 | 99.5 |
| S20 | 0.00688 | 5.54 | 15.63 | 2.16 | 99.4 |
| | 0.00703 | 5.36 | 13.09 | 0.63 | 99.6 |
| | 0.01040 | 8.57 | 9.48 | 0.16 | 99.8 |
| | 0.01048 | 8.92 | 7.92 | 0.32 | 99.8 |
| S21 | 0.00582 | 4.24 | 45.91 | 23.71 | 96.1 |
| | 0.00754 | 5.16 | 19.74 | 2.82 | 99.2 |
| S22 | 0.00458 | 3.55 | 47.68 | 14.79 | 97.1 |
| | 0.00658 | 4.68 | 23.13 | 1.70 | 99.3 |
| | 0.00935 | 6.51 | 22.18 | 1.21 | 99.3 |
| S23 | 0.00496 | 3.88 | 41.79 | 6.37 | 98.3 |
| | 0.00705 | 4.62 | 22.03 | 1.18 | 99.3 |
| | 0.00986 | 7.46 | 14.14 | 0.48 | 99.6 |
| S25 | 0.00977 | 6.54 | 21.85 | 0.72 | 99.4 |
| | 0.00682 | 4.34 | 30.94 | 1.92 | 99.0 |
| | 0.00481 | 3.10 | 51.42 | 13.45 | 97.2 |

Notes: Emissions data for oxides of nitrogen corrected to combustor inlet total temperature of 586 K, inlet pressure of 8.51 atm, reference velocity of 40.7 m/s, humidity of 6.29 g/kg, and combustor exit total temperature of 1062 K.

Emissions of carbon monoxide and total unburned hydrocarbons corrected to combustor inlet pressure of 8.51 atm.

Efficiency based on carbon balance data.

## TABLE XXVI

## VORBIX COMBUSTOR EMISSIONS AT CLIMB CONDITIONS

| | | Emissions Index (g/kg fuel) | | | |
|---|---|---|---|---|---|
| Configuration | Pilot Fuel-Air Ratio | Oxides of Nitrogen | Carbon Monoxide | Total Unburned Hydrocarbons | Combustion Efficiency (Percent) |
| S11 | 0.00418 | 12.03 | 9.12 | 0.54 | 99.7 |
| S13 | 0.00604 | 12.40 | 8.48 | 0.33 | 99.8 |
| S17 - Pilot Only | 0.01976 | 10.34 | 2.98 | 0.13 | 99.9 |
| S18 | 0.00304 | 15.41 | 9.10 | 0.33 | 99.7 |
| S20 | 0.00764 | 15.14 | 2.70 | — — | — — |
| S22 | 0.00209 | 10.50 | 12.93 | 2.37 | 99.4 |
| S23 | 0.00389 | 11.37 | 4.85 | 0.14 | 99.9 |
| S25 | 0.00228 | 8.53 | 8.80 | 0.91 | 99.5 |

Notes: Emissions data for oxides of nitrogen corrected to combustor inlet total temperature of 735 K, inlet pressure of 18.51 atm, reference velocity of 44.5 m/s, humidity of 6.29 g/kg, and combustor exit total temperature of 1396 K.

Emissions of carbon monoxide and total unburned hydrocarbons corrected to combustor inlet pressure of 18.51.

Efficiency based on carbon balance data.

### Cruise Results

Emissions data obtained at simulated cruise conditions are shown in Table XXVII. All configurations provided substantial improvements in the emissions of oxides of nitrogen relative to the current production JT9D-7 engine levels, with the best configuration providing an improvement of approximately 80 percent. Emissions of total unburned hydrocarbons and carbon monoxide were considerably higher than those of the current production JT9D-7 engine.

### EPAP Results

EPAP values were calculated for each configuration for which sufficient data were available, and the results are shown in Tables XXVIII and XXIX. As for the Hybrid combustor, the emission levels used in the calculation were selected from test data curves to provide the best overall emission levels when compromises between the various classes of emissions were required. Most configurations produced lower emissions of oxides of nitrogen and unburned hydrocarbons than the goal levels, but none met the goals for carbon monoxide emissions.

It appears that improvements in carbon monoxide levels could be achieved by permitting increases in oxides of nitrogen without exceeding that goal level. One way this can be accomplished is by increasing the pilot fuel-air ratio at each staged simulated engine cycle point. For example, configuration S25 produced EPAP values of 2.2, 6.5 and 0.3 respectively for oxides of nitrogen, carbon monoxide and total unburned hydrocarbons. For these data, pilot fuel-air ratios were 0.00687 at approach, 0.00228 at climb and 0.00225 at takeoff. Substituting data obtained with pilot fuel air ratios of 0.00977 at approach and 0.00587 at takeoff produces EPAP values of 2.4, 5.7 and 0.2. It appears that increasing pilot fuel-air ratios at the climb conditions would further reduce carbon monoxide levels. However, climb-out data for S25 were obtained only at the 0.00228 condition.

## TABLE XXVII

## VORBIX COMBUSTOR EMISSIONS AT CRUISE CONDITIONS

| | | Emissions Index (g/kg fuel) | | | |
|---|---|---|---|---|---|
| Configuration | Pilot Fuel-Air Ratio | Oxides of Nitrogen | Carbon Monoxide | Total Unburned Hydrocarbons | Combustion Efficiency (Percent) |
| JT9D-7* | | 22.2 | 1.0 | 0.2 | – |
| S11 | 0.00402 | 6.52 | 28.39 | 41.38 | 94.5 |
| S18 | 0.00498 | 13.47 | 15.72 | 0.25 | 99.6 |
| | 0.00590 | 13.30 | 12.65 | 0.12 | 99.7 |
| | 0.00692 | 14.06 | 11.02 | 0.07 | 99.7 |
| S20 | 0.00405 | 7.39 | 22.74 | 0.88 | 99.4 |
| | 0.00606 | 8.57 | 11.65 | 0.15 | 99.7 |
| | 0.00817 | 10.46 | 5.68 | 0 | 99.9 |
| S22 | 0.00270 | 6.99 | 28.40 | 7.10 | 98.5 |
| S23 | 0.00395 | 7.02 | 11.96 | 0.65 | 99.6 |
| S25 | 0.00245 | 4.48 | 22.29 | 3.97 | 99.0 |

* Estimated values

Notes: Emissions data for oxides of nitrogen corrected to combustor inlet total temperature of 704 K, inlet pressure of 9.31 atm, reference velocity of 41.8 m/s, humidity of 6.29 g/kg, and combustor exit total temperature of 1413 K.

Emissions of carbon monoxide and total unburned hydrocarbons corrected to combustor inlet pressure of 9.31 atm.

Efficiency based on carbon balance data.

## TABLE XXVIII

## VORBIX COMBUSTOR EPA PARAMETER EMISSIONS RESULTS

| Configuration | EPA Parameter (lbm pollutant/1000 lbf thrust-hr/landing-take-off cycle) Oxides of Nitrogen | Carbon Monoxide | Total Unburned Hydrocarbons | SAE Smoke Number | Idle Condition |
|---|---|---|---|---|---|
| JT9D-7 (1) | 5.9 | 8.5 | 3.9 | 4 | Without bleed |
| Goal (2) | 3.0 | 4.3 | 0.8 | ≤ 15 | |
| S11 | 3.0 | 9.1 | 0.3 | – | With bleed |
| S18 | 3.4 | 14.8 | 0.3 | – | With bleed |
| S20 | 3.3 | 9.6 | 1.1 | 2 | With bleed |
| S20 | 3.5 | 6.2 | 0.7 | | Without bleed |
| S22 | 2.6 | 12.9 | 0.9 | 1 | With bleed |
| S22 | 2.7 | 10.3 | 0.9 | | Without bleed |
| S23 | 2.5 | 8.7 | 0.3 | 2 | With bleed |
| S23 | 2.6 | 8.6 | 0.5 | | Without bleed |
| S25 | 2.2 | 10.4 | 0.3 | 3 | With bleed |
| S25 | 2.2 | 6.5 | 0.3 | | Without bleed |

(1) Based on initial production test results for combustor EC 289386

(2) 1979 EPA rule levels for class T2 engines

Note: All data corrected to JT9D-7 engine conditions

## TABLE XXIX

## LANDING-TAKEOFF CYCLE POINT EMISSION INDICES FOR VORBIX COMBUSTOR

| | Emissions Index (g/kg fuel) | | | | | | | | | | | | | | |
|---|---|---|---|---|---|---|---|---|---|---|---|---|---|---|---|
| | Idle (Bleed) | | | Approach | | | Climb | | | Sea-Level Take-off | | | Cruise | | |
| Configuration | Carbon Monoxide | Total Unburned Hydrocarbons | Oxides of Nitrogen | Carbon Monoxide | Total Unburned Hydrocarbons | Oxides of Nitrogen | Carbon Monoxide | Total Unburned Hydrocarbons | Oxides of Nitrogen | Carbon Monoxide | Total Unburned Hydrocarbons | Oxides of Nitrogen | Carbon Monoxide | Total Unburned Hydrocarbons | Oxides of Nitrogen |
| ECCP Goal | 20, 20* | 4.0, 4.0* | -- | -- | -- | -- | -- | -- | -- | -- | -- | 10.0 | -- | -- | — |
| JT9D-7 Production | 46.7* | 21.6* | 3.9* | 3.5 | 0.7 | 7.8 | 0.5 | 0.4 | 28.8 | 0.4 | 0.4 | 39.9 | 1.0† | 0.2† | 22.2† |
| S11 | 39 | 1.2 | 3.8 | 11.2 | 0.4 | 6.7 | 9.1 | 0.5 | 12.0 | 10.7 | 0.8 | 14.6 | 28.4 | 41.4 | 6.5 |
| S12 | 37.7 | 1.7 | 3.4 | 6.01 | 0.3 | 9.97 | -- | -- | -- | 16.6 | 0.4 | 15.5 | -- | -- | -- |
| S13 | 37.7 | 1.7 | 3.4 | -- | -- | -- | 8.48 | 0.3 | 12.4 | 6.3 | 0.2 | 2.17 | -- | -- | -- |
| S14 | 37.7 | 1.7 | 3.4 | -- | -- | -- | -- | -- | -- | 4.9 | 0.4 | 21.8 | -- | -- | -- |
| S15 | 37.7 | 1.7 | 3.4 | -- | -- | -- | -- | -- | -- | 19.8 | 0.7 | 16.1 | -- | -- | -- |
| S16 | 61.6 | 1.0 | 3.2 | -- | -- | -- | -- | -- | -- | 8.4 | 0.2 | 17.6 | -- | -- | -- |
| S17 | 55.3 | 1.3 | 2.7 | 12.48 | 0.3 | 4.6 | 2.98** | 0.1** | 10.34** | 11.2 | 0.4 | 18.0 | -- | -- | -- |
| S18 | 69.8 | 1.1 | 2.9 | 15.3 | 1.1 | 6.0 | 9.1 | 0.3 | 15.4 | 11.3 | 0.3 | 20.3 | 15.7 | 0.3 | 13.5 |
| S19 | 64.8 | 0.2 | 2.8 | -- | -- | -- | -- | -- | -- | 3.5 | 0.1 | -- | -- | -- | -- |
| S20 | 46.3, 27.0* | 6.2, 3.5* | 3.1, 4.0* | 7.9 | 0.3 | 8.9 | 2.7 | 0 | 15.1 | 14.0 | 0.6 | 13.8 | 22.7 | 0.9 | 7.4 |
| S21 | 43.0, 28.0* | 2.3, 1.6* | 2.9, 3.4* | 19.74 | 2.8 | 5.16 | -- | -- | -- | 13.9 | 0.6 | 14.0 | -- | — | -- |
| S22 | 54.4, 39.5† | 2.8, 2.8* | 3.1, 3.7* | 23.1 | 1.7 | 4.7 | 12.9 | 2.4 | 10.5 | 9.3 | 0.7 | 15.0 | 28.4 | 7.1 | 7.0 |
| S23 | 35.2, 35.0* | 1.0, 2.0* | 3.6, 4.1* | 22 | 1.2 | 4.6 | 4.9 | 0.1 | 11.4 | 10.7 | 1.1 | 9.0 | 12.0 | 0.7 | 7.0 |
| S24 | 32.0* | 2.7 | 3.8* | -- | -- | -- | -- | -- | -- | 4.5 | 0.3 | 12.9 | -- | -- | -- |
| S25 | 40.5, 18.5* | 0.5, 0.5* | 2.9, 3.2* | 30.9 | 1.9 | 4.3 | 8.8 | 0.9 | 8.5 | 4.5 | 0.4 | 10.8 | 22.2 | 4.0 | 4.5 |

*unbled idle condition
**pilot only
†estimated value

ORIGINAL PAGE IS
OF POOR QUALITY

Overall, the best results were obtained with Configuration S25, which provided EPA parameter values for all emissions species that were substantially lower than those of the current production JT9D-7 engine. Relative to the JT9D-7, Configuration S25 provided a 63-percent reduction in oxides of nitrogen, a 24-percent reduction in carbon monoxide, and a 92-percent reduction in total unburned hydrocarbons.

Correlation of the efficiency data for idle, approach, climb, and sea-level take-off reveals an important characteristic of the Vorbix combustor, as shown in Figure 29. At idle conditions, the combustion efficiency drops off rapidly at pilot fuel-air ratios below 0.009, but the efficiency becomes progressively higher for a given pilot fuel-air ratio as the power level is increased. This characteristic indicates that fuel scheduling between the pilot and main zones can be effective in minimizing emissions at any intermediate power level.

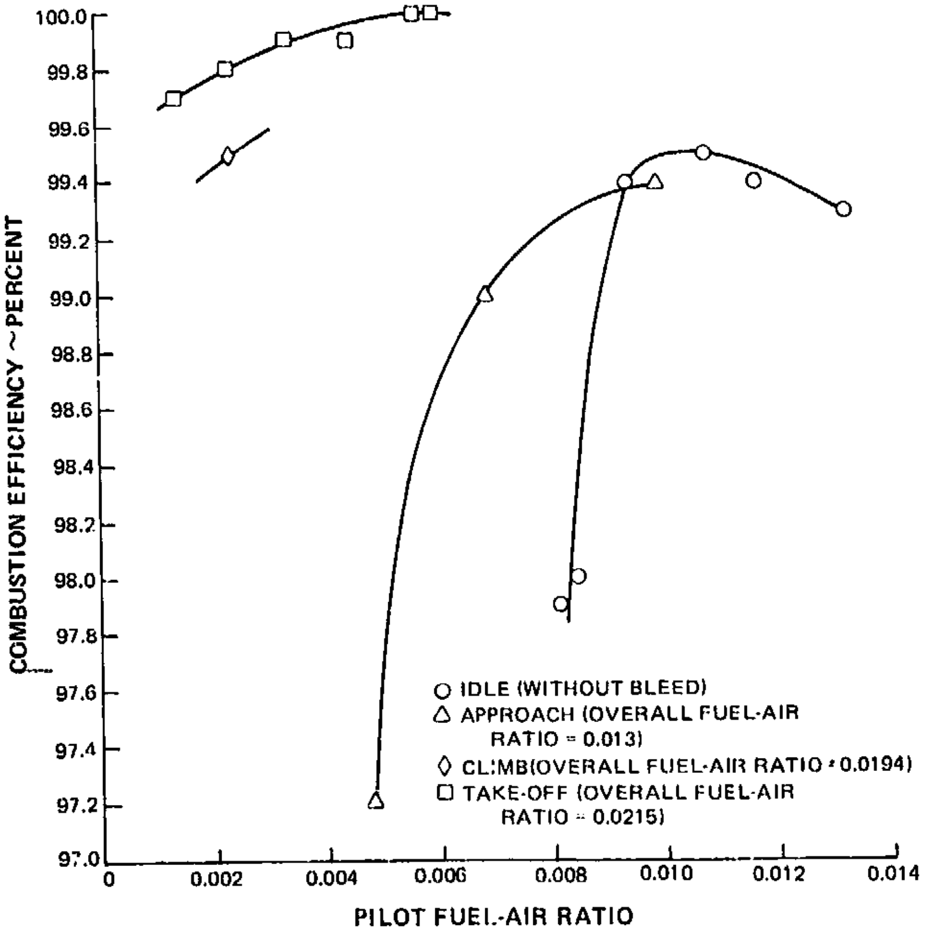

*Figure 29* *Efficiency Characteristics for Vorbix Combustor Configuration S25 as a Function of Pilot Zone Fuel-Air Ratio*

## 2. PERFORMANCE RESULTS

As for the Hybrid combustor, performance measurements were made during the Phase II program for the Vorbix combustor to determine pressure loss, exit temperature pattern, idle lean blowout limits, altitude stability and relight characteristics, and durability.

### Pressure Loss

The measured values of combustor, diffuser, and total combustion system pressure loss are summarized in Table XXX. As shown, the initial configurations of the Vorbix combustor operated with pressure losses in excess of seven percent. This high loss level resulted primarily from the high shroud losses around the combustor front end. A significant reduction in the losses was achieved in later configurations through incorporation of a hood to streamline the flow around the Vorbix front end. The hood was retained for Configuration S25, but an increase in the losses occurred as a result of a change in the front-end airflow schedule, since the hood was specifically sized for the airflow requirements of Configuration S23.

TABLE XXX

SUMMARY OF PRESSURE LOSS TEST RESULTS
FOR VORBIX COMBUSTOR

| Configuration | Overall Pressure Loss (Percent) | Combustor Loss (Percent) | Diffuser and Shroud Loss (Percent) |
|---|---|---|---|
| Goal | 6.0 | – – | – – |
| JT9D-7 | 5.4 | – – | – – |
| S11 | 7.2 | 2.7 | 4.5 |
| S12 | 7.2 | 2.7 | 4.5 |
| S13 | 7.2 | 2.7 | 4.5 |
| S14 | 7.2 | 2.7 | 4.5 |
| S15 | 7.2 | 2.7 | 4.5 |
| S16 | 7.3 | 2.7 | 4.6 |
| S17 | 7.3 | 2.7 | 4.6 |
| S18 | 6.1 | 2.4 | 3.7 |
| S19 | 6.2 | 2.3 | 3.9 |
| S20 | 5.6 | 2.3 | 3.3 |
| S21 | 6.0 | 2.8 | 3.2 |
| S22 | 5.6 | 2.5 | 3.1 |
| S23 | 4.6 | 2.3 | 2.3 |
| S24 | 4.6 | 2.3 | 2.3 |
| S25 | 6.9 | 2.5 | 4.4 |

## Exit Temperature Data

When thermocouple durability problems limited the amount of temperature data available, pattern factors were calculated on the basis of the hottest temperature reading obtained from the functioning thermocouples and an average temperature calculated on the basis of the measured fuel-air ratio. Most of the data for high power operating conditions was obtained with a fuel-air ratio of 0.016 to limit the maximum temperatures and promote thermocouple life.

The circumferential temperature profiles for the Vorbix combustor at idle and sea-level take-off conditions are shown in Figures 30 and 31. These data show far less scatter than those for the Hybrid combustor, and the temperature patterns do not appear to be influenced adversely by the strut wakes.

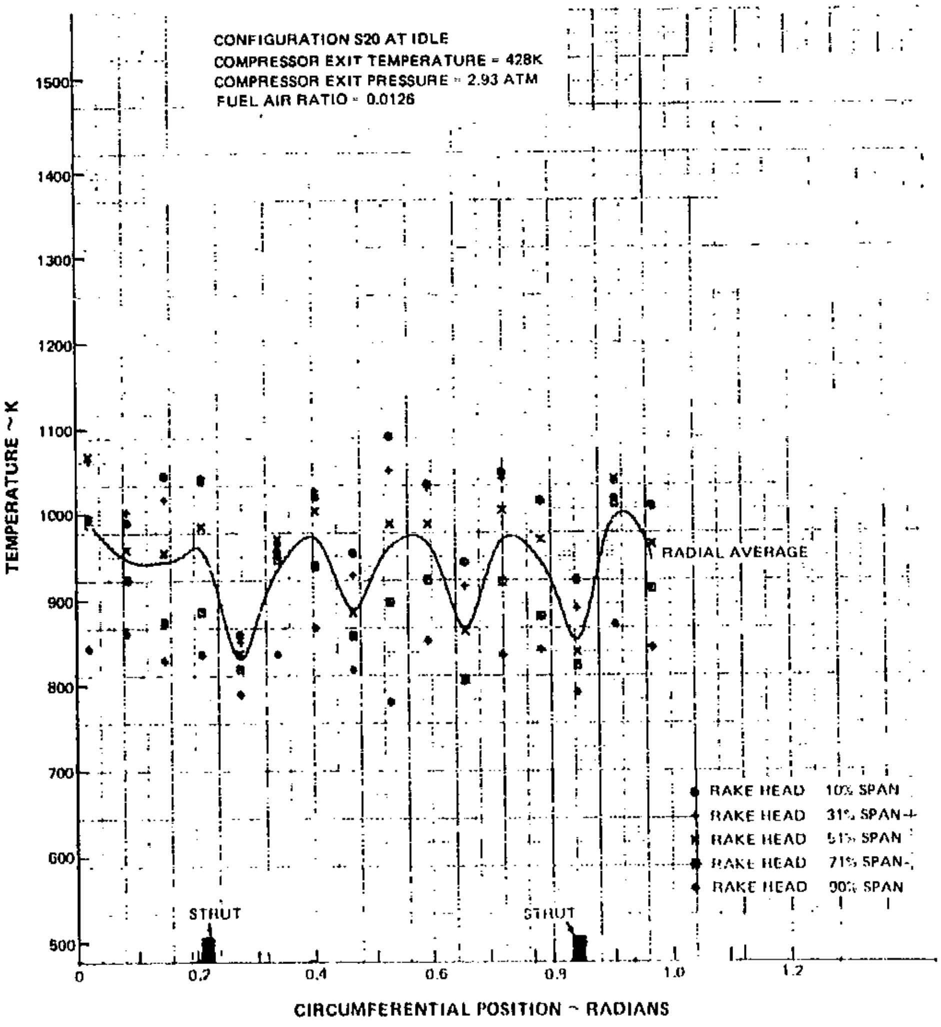

*Figure 30* *Circumferential Exit Temperature Patterns for Vorbix Combustor Configuration S20 at Idle Conditions*

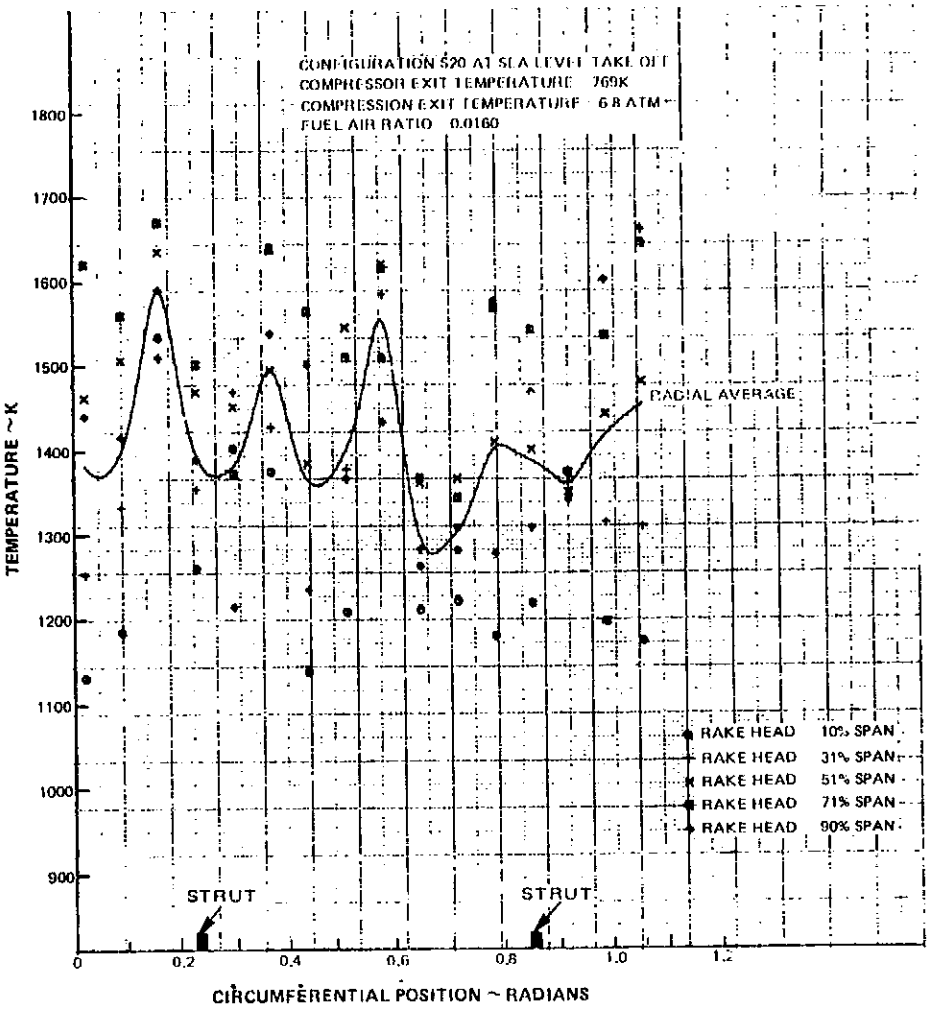

*Figure 31 Circumferential Exit Temperature Patterns for Vorbix Combustor Configuration S20 at Sea-Level Take-Off Conditions With Fuel-Air Ratio of 0.016*

Pattern factors are shown in Table XXXI and range from 0.42 to 0.93 at take-off conditions. Although the best configuration provided a pattern factor equal to that of the current JT9D-7 production combustor, it remained 68 percent above the goal, indicating the desirability for further development.

The radial temperature profile obtained at idle conditions is shown in Figure 32. Unlike the Hybrid combustor which produced high temperatures near the inner wall because of the radial displacement of the pilot and main burner zones, the Vorbix combustor produced a relatively uniform profile at idle conditions. This uniform profile is one benefit of axial rather than radial separation of the two combustor stages.

High-temperature radial temperature profiles for selected Vorbix combustor configurations are shown in Figure 33. These plots show that the profile is sensitive to the configurational changes. Several configurations provided profiles similar to the JT9D-7 target profile.

### TABLE XXXI

### SUMMARY OF VORBIX COMBUSTOR EXIT TEMPERATURE PATTERN FACTOR RESULTS

| Configuration | Pattern Factor<br>Idle Conditions | <br>Take-Off Conditions |
|---|---|---|
| Goal | -- -- | 0.25 |
| JT9D-7 | -- -- | 0.42 |
| S11 | 0.27 | 0.57 |
| S12 | 0.46 | 0.93 |
| S13 | -- -- | 0.58 |
| S14 | -- -- | -- -- |
| S15 | -- -- | -- -- |
| S16 | 0.30 | 0.80 |
| S17 | 0.30 | 0.80 |
| S18 | 0.27 | 0.78 |
| S19 | 0.57 | -- -- |
| S20 | 0.40 | 0.65 |
| S21 | 0.39 | -- -- |
| S22 | 0.46 | 0.68 |
| S23 | 0.36 | 0.43 |
| S24 | -- -- | 0.42 |
| S25 | 0.44 | 0.48 |

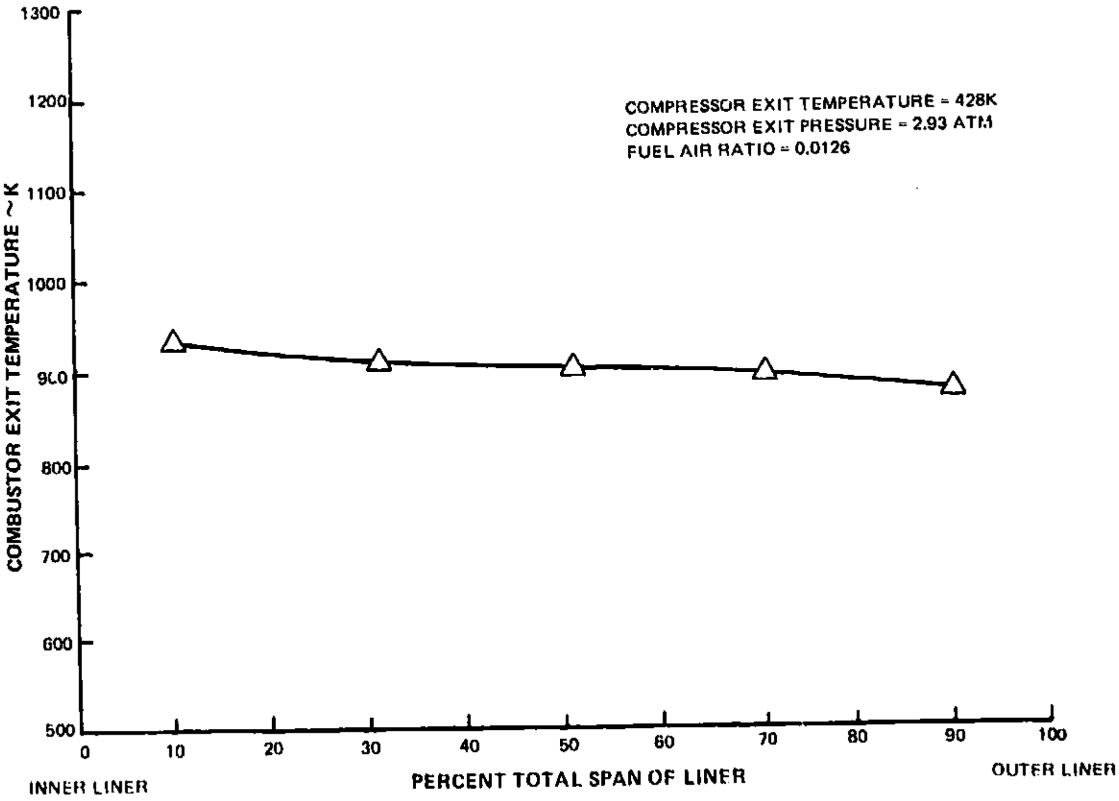

*Figure 32 Radial Exit Temperature Pattern for Vorbix Combustor Configuration S16 at Idle Conditions*

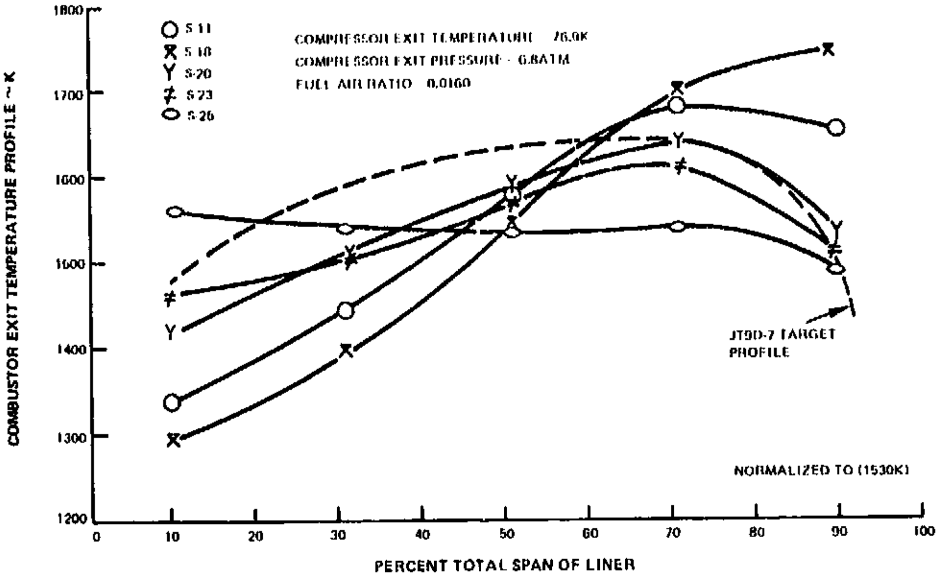

*Figure 33* *Radial Exit Temperature Patterns for Selected Vorbix Combustor Configurations at Sea-Level Take-Off Conditions*

## Idle Lean Blowout Limits

The Vorbix combustor idle lean blowout data are presented in Table XXXII. As shown, all Vorbix combustor configurations except Configurations S11 and S21 provided lean blowout limits lower than those for the JT9D-7 combustor. Configuration S21 had a high pilot swirler airflow which produced a leaner pilot zone and consequently increased the overall combustor fuel-air ratio at lean blowout.

TABLE XXXII

SUMMARY OF VORBIX COMBUSTOR IDLE LEAN BLOWOUT TEST RESULTS

| Configuration | Idle Lean Blowout Fuel-Air Ratio |
|---|---|
| Goal | |
| JT9D-7 | < 0.004 |
| S11 | 0.0063 |
| S17 | 0.0014 |
| S18 | 0.0023 |
| S19 | 0.0019 |
| S20 | 0.0038 |
| S21 | 0.0064 |
| S22 | 0.0026 |
| S23 | 0.0030 |
| S24 | 0.0024 |
| S25 | 0.0025 |

Notes Data taken with simulated compressor bleed. Nominal inlet conditions were inlet pressure of 2.92 atm and inlet temperature of 428K

### Altitude Stability and Relight Results

The altitude stability and relight data for the Vorbix combustor revealed that the characteristics are sensitive to the pilot swirler configuration. The initial results obtained for Configurations S19 and S20 are shown in Figure 34. The results approach the engine requirement and compare favorably with results from rig tests for the JT9D-7 combustor. The effect of the pilot swirler modification incorporated in Configurations S24 and S25 is shown in Figure 35. These data indicate significantly poorer altitude stability and relight characteristics. In an attempt to improve performance, Configuration S24 was retested with a high-pressure drop fuel nozzle. Results are shown in Figure 36. As shown, this change was effective in improving the altitude stability and relight performance, but it did not achieve the capabilities of Configurations S19 and S20.

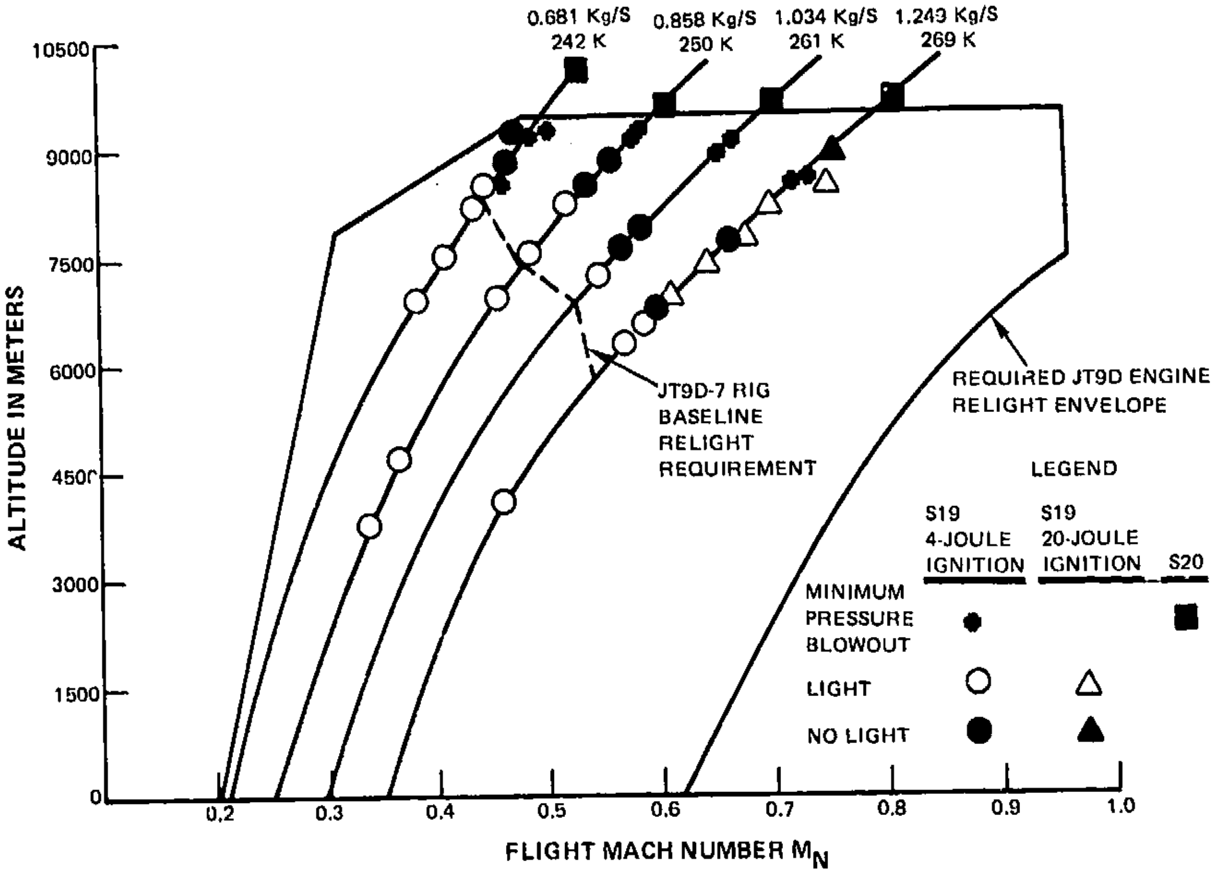

*Figure 34 Altitude Stability and Relight Characteristics of Vorbix Combustor Configurations S19 and S20 Shown on JT9D-7 Altitude Relight Envelope*

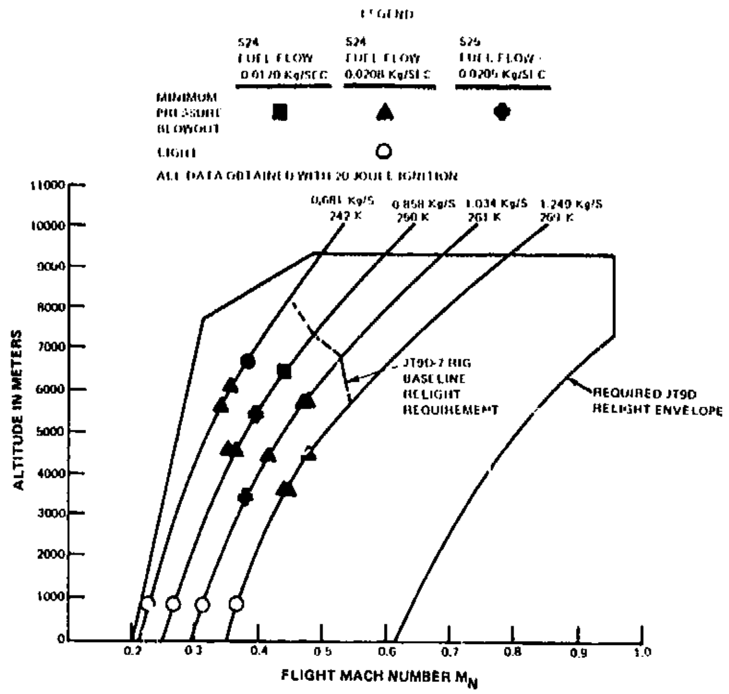

*Figure 35 Altitude Stability and Relight Characteristics of Vorbix Combustor Configurations S24 and S25 With Modified Pilot Swirler*

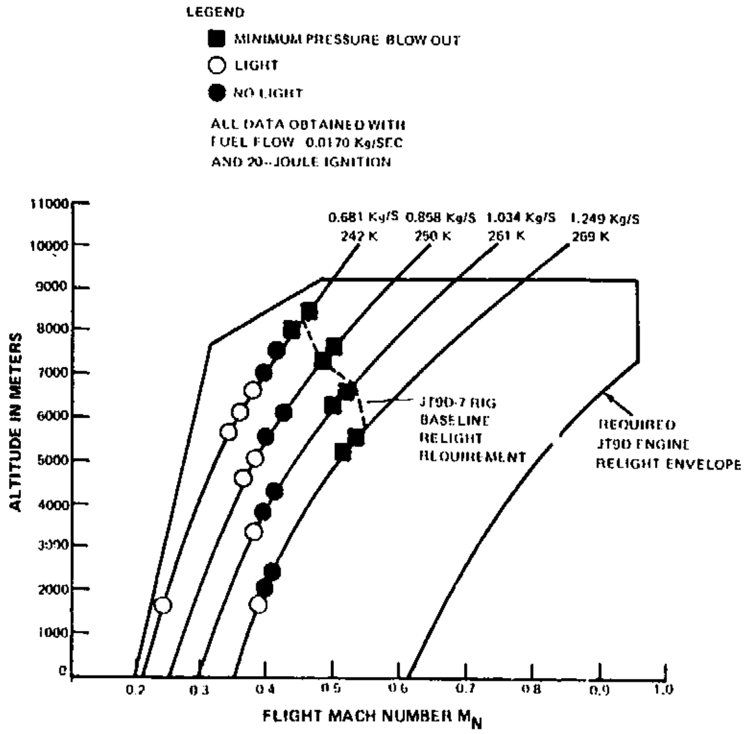

*Figure 36 Altitude Stability and Relight Characteristics of Vorbix Combustor Configuration S24 With Increased Pressure Drop Pilot Fuel Nozzles*

ORIGINAL PAGE IS
OF POOR QUALITY

It should be noted that retention of the good altitude and relight capabilities demonstrated in Configurations S19 and S20 could require compromise of the good emissions characteristics demonstrated in the later configurations. Achievement of both characteristics concurrently is expected to require considerable development.

### Combustor Durability

The Vorbix combustor experienced only minor durability problems consisting of localized hot spots on the combustor liners. Configuration S21, however, experienced local burning in the vicinity of the main burner premixing tubes.

## D. COMBUSTOR STATUS ASSESSMENT

Summaries of pollution results for the best performing configuration of each combustor concept, Hybrid Configuration H7 and Vorbix Configuration S25, are contained in Figures 37, 38, and 39. JT9D production engine data are also included for comparison. A summary of performance results and status for both concepts are contained in Tables XXXIII and XXXIV.

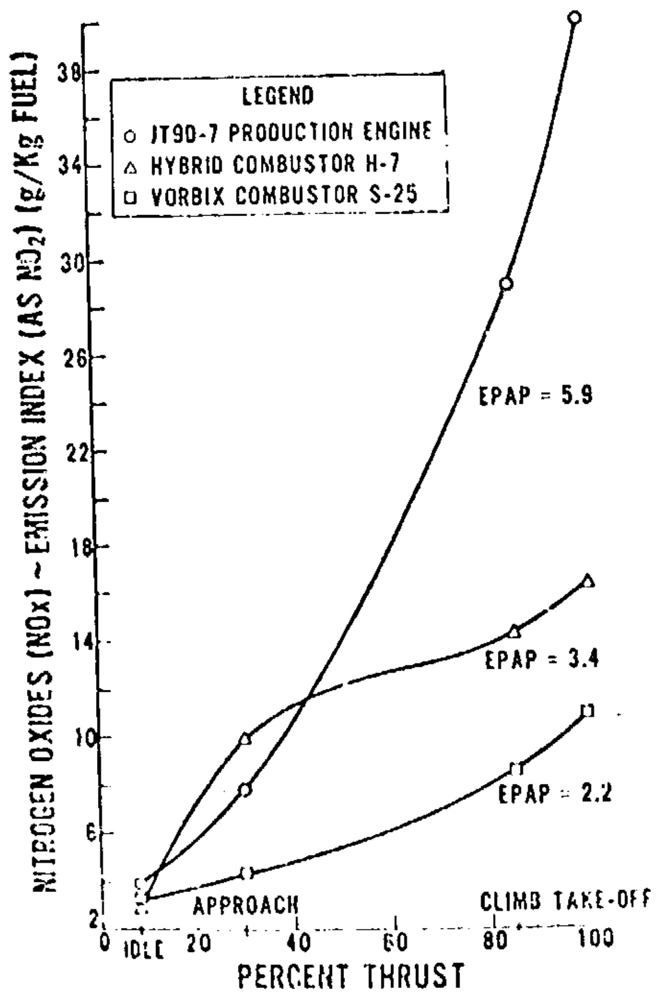

*Figure 37 Emission Characteristics for Oxides of Nitrogen Versus Percent Engine Thrust*

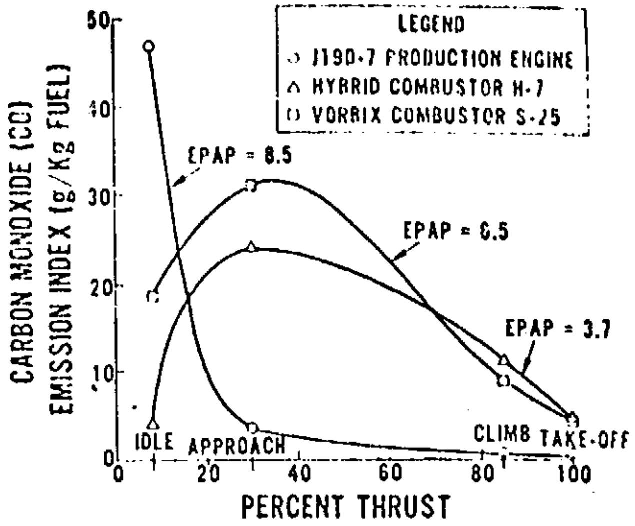

*Figure 38 Emission Characteristics for Carbon Monoxide Versus Percent Engine Thrust*

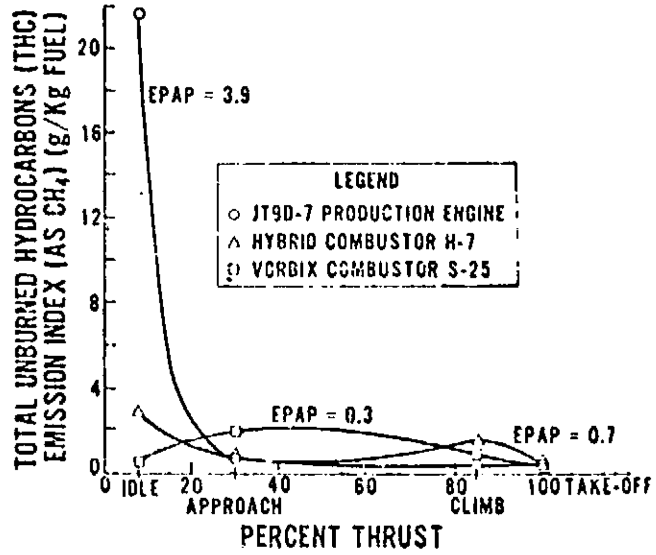

*Figure 39 Emission Characteristics for Total Unburned Hydrocarbons Versus Percent Engine Thrust*

## TABLE XXXIII

## HYBRID COMBUSTOR PERFORMANCE RESULTS

| | Currently Meets Requirement | Should Meet Requirement With Normal Development | Should Meet Requirement With Extensive Development |
|---|---|---|---|
| Pressure Loss | X | | |
| Exit Temperature Pattern Factor | | | X |
| Radial Exit Temperature Profile | | X | |
| Idle Stability (Lean Blowout) | | X | |
| Altitude Relight Characteristics | ——— | | X |
| Durability | | | X |
| Carbon Formation | | X | |

## TABLE XXXIV

## VORBIX COMBUSTOR PERFORMANCE RESULTS

| | Currently Meets Requirement | Should Meet Requirement With Normal Development | Should Meet Requirement With Extensive Development |
|---|---|---|---|
| Pressure Loss | X | | |
| Exit Temperature Pattern Factor | | | X |
| Radial Exit Temperature Profile | | X | |
| Idle Stability (Lean Blowout) | X | | |
| Altitude Relight Characteristics | | X | |
| Durability | | X | |
| Carbon Formation | | X | |

On the basis of these results, the Vorbix combustor was deemed the more promising design and the one most readily adaptable to engine installation. Thus, the Vorbix concept was selected for additional Phase II testing and for the engine testing. The best all-around combustor configurations, Vorbix combustor Configuration S25 and Hybrid combustor Configuration H7, exhibited significant EPA parameter emissions reductions compared to the JT9D production combustor while maintaining smoke below the visible threshold. Both of these combustor configurations have been developed to the extent that either of them could have been chosen for the Phase III engine demonstration tests.

Determining factors in the Phase III selection were the generally good performance aspects of the Vorbix combustor, including the ability to operate full staged at approach. With the exception of the program pattern factor goal, this design currently meets, or should meet with normal development, all engine performance requirements. Vorbix pattern factors, while not at the goal level of 0.25, are equivalent to current production JT9D-7 levels.

## E. PHASE III ENGINE DESIGN

A representative cross-section of the Phase III engine design is shown in Figure 40. This configuration is expected to produce emissions comparable to those produced by Configuration S25 in Phase II. The Phase III configuration closely resembled Configuration S25 except for a number of minor changes required to incorporate the combustor into the engine and facilitate installation. A common cast fuel injector support has been designed for both the pilot and the main burner zone to reduce fabrication cost. In addition, to reduce diffuser case distrotion, the pilot fuel injector mount pads will be clustered in groups of three. The pads will be mounted on ten bosses welded to the diffuser case. Clustering reduces the amount of case welding required and also eliminates interference with the diffuser case bleed bosses.

Other minor changes include an increase in pilot zone swirler travel to allow radial growth and a revised cooling airflow distribution. In addition, sturctural considerations dictated revision of the mount pin arrangement and stiffening of the throat cooling air scoops to prevent flutter.

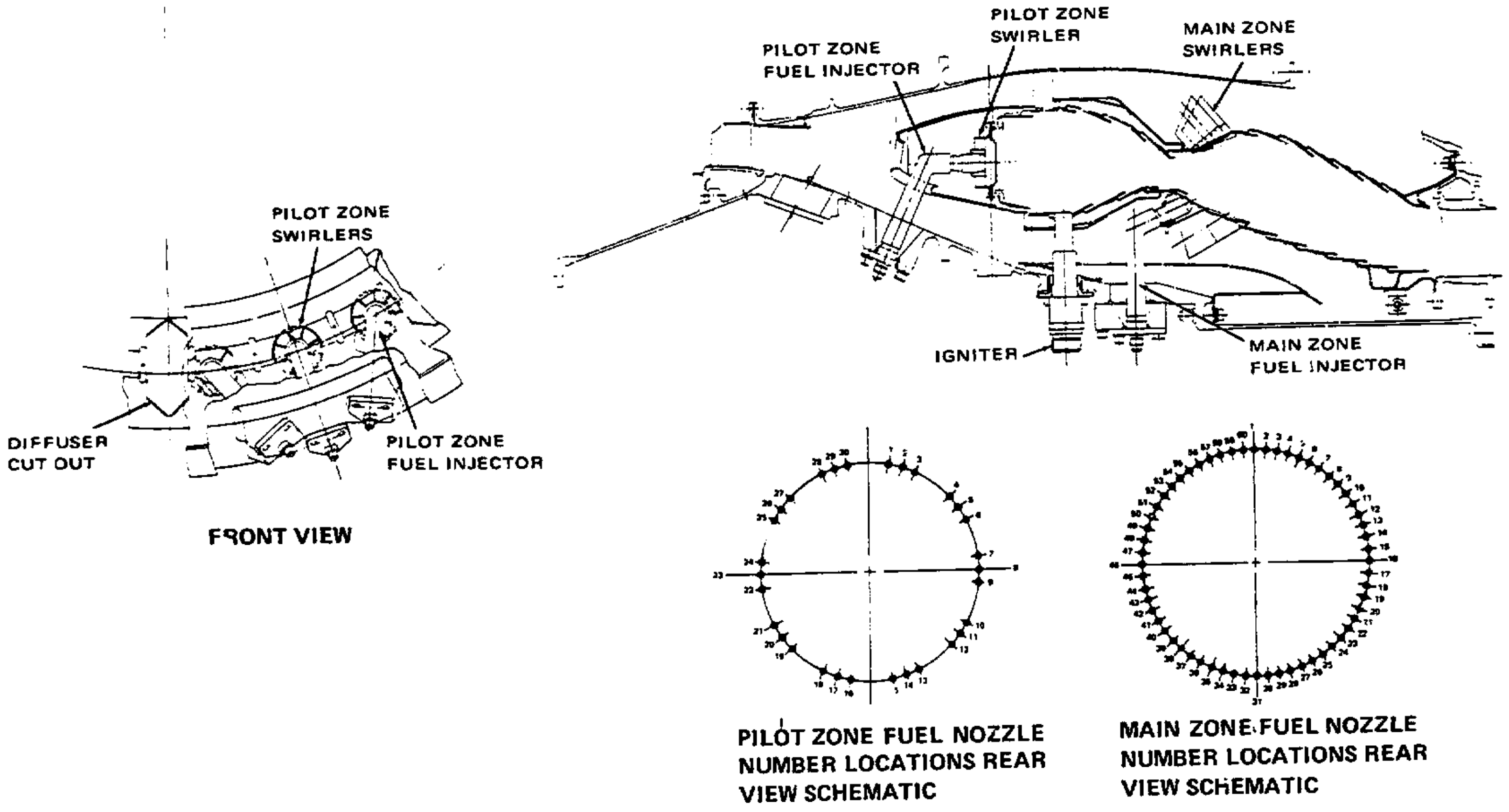
PILOT ZONE SWIRLERS
DIFFUSER CUT OUT
PILOT ZONE FUEL INJECTOR
FRONT VIEW
PILOT ZONE FUEL INJECTOR
PILOT ZONE SWIRLER
MAIN ZONE SWIRLERS
IGNITER
MAIN ZONE FUEL INJECTOR
PILOT ZONE FUEL NOZZLE NUMBER LOCATIONS REAR VIEW SCHEMATIC
MAIN ZONE FUEL NOZZLE NUMBER LOCATIONS REAR VIEW SCHEMATIC

*Figure 40* *Preliminary Design of Phase III Vorbix Combustor for Demonstration Engine Testing*

# CHAPTER IV
# FUEL CONTROL DESIGN STUDY

## A. INTRODUCTION

A fuel control design study was conducted as part of Phase II to identify control system requirements added by the staged combustor concepts developed in the Experimental Clean Combustor Program. A number of conceptual designs which satisfy the functional requirements were specified, and the most promising concepts were selected on the basis of available technology and estimated life cycle cost.

The study was conducted in two parts. The first addressed modification of the current JT9D fuel control with a minimum number of changes to meet the requirements of the staged Vorbix combustor. This concept was based on 1975 technology and included specific design work to prepare a design for a breadboard control system for Phase III engine testing. The breadboard engine fuel control design for Phase III engine testing is described in this chapter. Items relating to identification of candidate schemes, concept evaluation and concept selection are contained in Appendix C.

In the second part of the study, new design concepts using projected 1985 technology were explored. These study results are also contained in Appendix C.

## B. FUEL CONTROL DESIGN REQUIREMENTS

The current JT9D-7 fuel control unit is a hydromechanical device which sets engine thrust by scheduling and distributing total engine fuel flow as a function of power lever position, high-pressure rotor speed, and limiting parameters such as combustor pressure.

The combustor pressure and fuel flow envelopes corresponding to the altitude-Mach number operational envelope of the JT9D-7 engine are shown in Figure 41. The current production single-stage combustor system employs duplex fuel nozzles, with the cut-in point of the secondary fuel flow occurring at a fixed value of overall fuel flow. Effectively, the staging point is independent of overall combustor fuel-air ratio, and the primary/secondary split can be quite different at various engine power levels and operating altitudes. In addition to the fuel control function, the engine control unit schedules variable compressor stator vane angle and compressor bleeds.

Two-stage combustors, of the type developed in the Experimental Clean Combustor Program, are characterized by two separate combustion zones and two physically separate sets of fuel injectors and manifolding. Since each combustor zone must be operated within generally narrow limits for optimum emission formation and combustion efficiency, fuel distribution to each zone must be based on engine fuel-air ratio rather than total fuel flow. In addition, a number of mechanical constraints such as maximum fuel pump pressure, minimum controllable flow rate, fuel nozzle turn-down ratio, manifold head effect, etc., act to further limit the fuel control designer's freedom in varying pilot to main fuel distribution. Preliminary specification of the pilot/main fuel split for the two-stage Vorbix combustor operating at sea-level is shown in Figure 42. Minimum and maximum limits are imposed on the pilot zone fuel-air ratio to prevent lean blow out and excessive thermal stresses in the pilot zone. These limits were developed from the Phase II combustor rig testing, and define the practical operating envelope which can be used for pilot/main zone fuel schedule optimization in the engine during the Phase III effort.

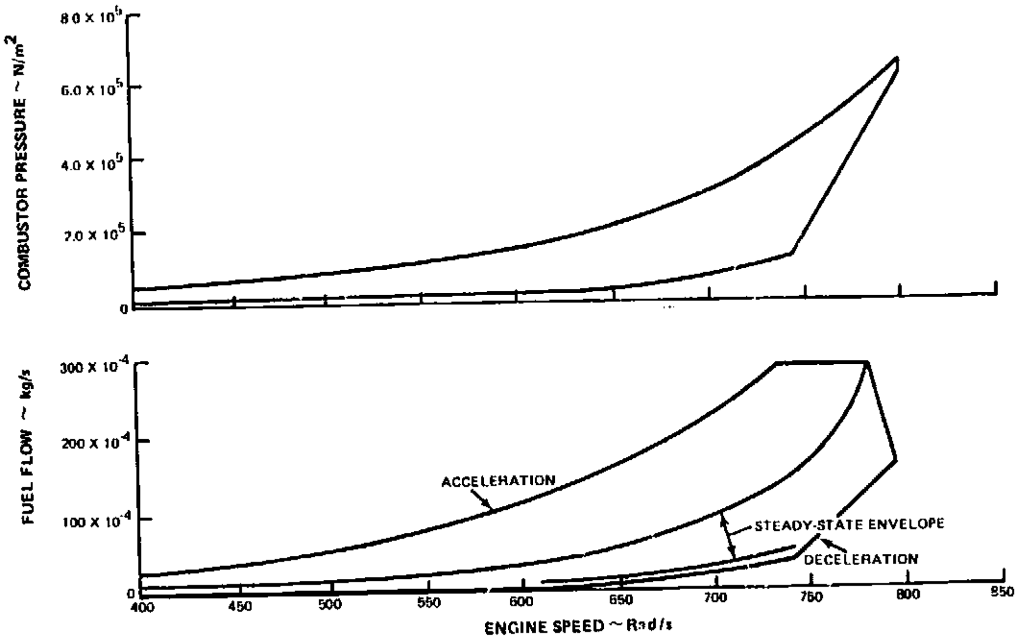

*Figure 41 JT9D Engine Combustor Pressure and Fuel Flow Envelopes*

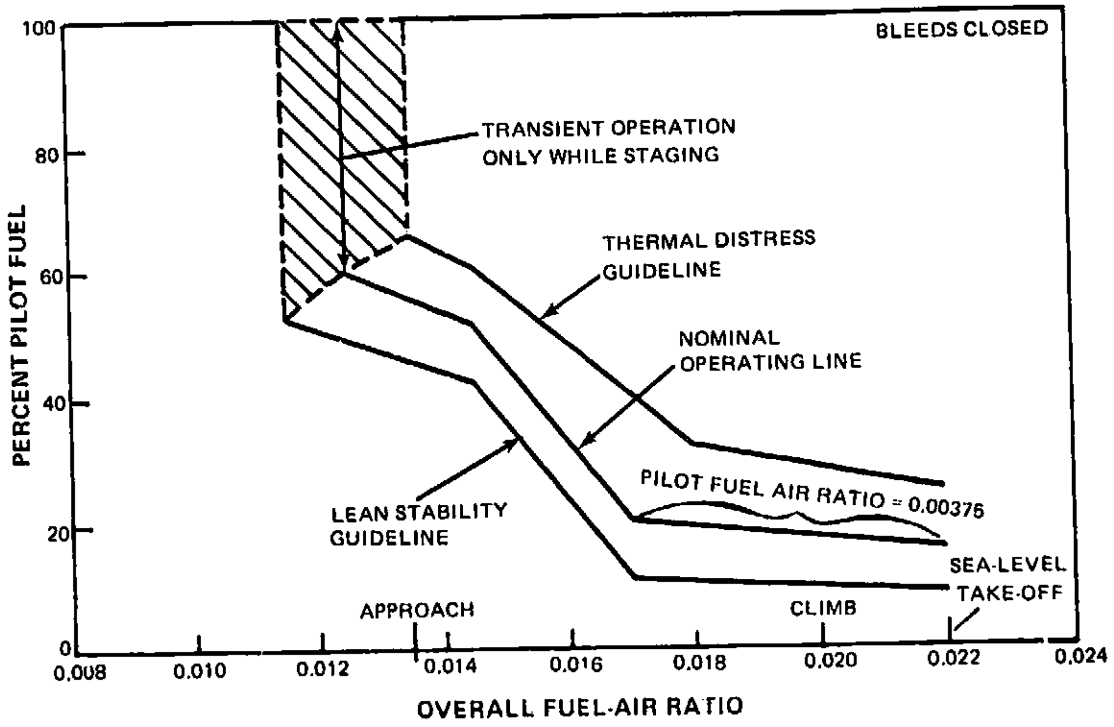

*Figure 42 Fuel Scheduling Requirements for Two-Stage Vorbix Combustor Based on Phase II Experimental Clean Combustor Results*

An additional requirement imposed by the staged Vorbix combustor is that passage through the staging point (transition from 100 percent pilot to pilot plus main zone operation) must be accomplished in a rapid and continuous manner. This is required for reasons of flight safety, and is specified by the FAA Airworthiness Standards (Reference 4) in terms of a five-second maximum allowable elapsed time for engine acceleration from flight idle to 95 percent thrust. The current production JT9D-7 fuel system is fully staged at ground idle, thereby eliminating "fill time" delays associated with the volume of the secondary fuel manifold, distribution tubes, and fuel nozzle supports. However, the Experimental Clean Combustor Vorbix combustor must stage between the idle and approach operating conditions. Uncompensated manifold fill time delays will seriously impact engine transient response. For this reason, significant effort was devoted to minimizing this problem in the definition of candidate fuel control design concepts.

## C. FUEL CONTROL BREADBOARD DESIGN FOR PHASE III ENGINE TESTING

The breadboard fuel control and distribution system for the Phase III engine demonstration testing is shown schematically in Figure 43. This arrangement utilizes existing JT9D fuel control components where feasible, and retains the engine control stator vane and bleed schedule functions intact. The main fuel pump, main fuel control, and the fuel-oil cooler are JT9D production components used without alteration. The flow distribution valve (percent split valve) will be similar to a Hamilton Standard Division component with appropriate modifications to meet the flow requirements of the Vorbix combustor. The percent split valve is controlled by a reprogrammable PDP 11/40 digital computer. Overall combustor fuel-air ratio, required as a principal control parameter, is sensed by its proportionality to total fuel flow divided by combustor inlet pressure. Manifolds, staging valve operation, etc, will be functionally identical to hardware intended for eventual flight use.

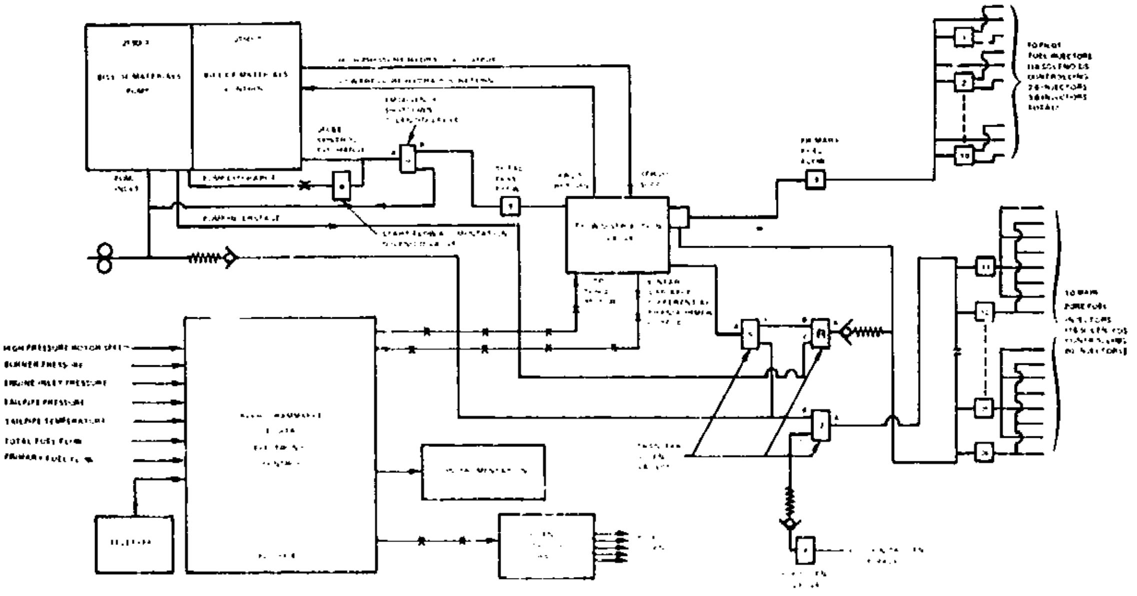

*Figure 43 Preliminary Design of Breadboard Fuel Control for Phase III Engine Testing*

The staging mechanism will be implemented by a set of solenoid valves labeled S, L, and K in Figure 43. These valves are designed to provide three modes of operation. In the shutdown and start mode, the transfer valves will circulate all main zone fuel back to the pump inlet. In the circulation mode, the transfer valves will circulate low-pressure fuel from the interstage pump location through the main zone manifold and back to the pump inlet. In the staged mode, the transfer valves will direct the metered flow from the percent split valve to the main zone fuel injectors.

Eleven solenoid valves are provided for the pilot zone fuel system. One of these initiates fuel flow to ten fuel injectors arranged symmetrically around the engine. The remaining ten solenoids permit control of the fuel flow to the remaining twenty fuel injectors in pairs. The sixty main zone fuel injectors are controlled by sixteen solenoid valves arranged to permit circumferential zoning or sequencing in staggered groups of four injectors.

Flexibility in scheduling the start fuel flow is provided by a system that overrides the start flow schedule in the production JT9D fuel control. A start-flow augmentation solenoid valve will provide additional flow to the flow distribution valve on demand. The excess fuel not required for starting will then be diverted to the pump inlet.

An important design objective was to provide flexibility beyond that required for a flight engine control in order to permit optimization of the sequencing logic and scheduling during test and to permit investigation of alternate fuel system arrangements. A nitrogen purge system was provided to prevent coke formation in the main zone fuel system under hot shutdown conditions. An emergency fuel shutoff valve was included to ensure fail-safe engine shutdown in the event of a component or logic failure.

# CHAPTER V

# CONCLUDING REMARKS

The Phase II program successfully documented the potential of the Hybrid and Vorbix combustors and provided a firm basis for selection of the configuration for the Phase III engine test. Both concepts provided significant improvements in emissions relative to the current production JT9D-7 combustor, although neither fully met the program goals. The Vorbix combustor was selected for continuation to the Phase III engine demonstration program primarily on the basis of its greater potential for achieving the performance goals without excessive compromise of the emission levels. The Hybrid combustor was deficient in both idle stability and altitude relight capability, and required unstaged (pilot only) operation at the approach power setting to achieve acceptable combustion efficiency.

When projecting the emissions reduction technology documented in Phase II, it must be borne in mind that the quoted emission levels have been extrapolated from data obtained from a sector rig tested at a maximum inlet pressure of six atmospheres. Furthermore, a number of performance items will require additional development before production engine applications can be considered. These are summarized in Chapter III. In particular, Vorbix Configuration S25 is deficient in altitude relight capability. Earlier configurations showed acceptable relight characterisitcs, but the corresponding emission levels were less favorable. These performance deficiencies are considered to be correctable with additional development, but the eventual impact on emissions has not been fully defined.

The objectives of the Phase III effort are to verify the pollutant reductions achieved in test rigs in an engine environment and to demonstrate the suitability of the ECCP combustor concept for engine applications. Of primary interest will be assessment of transient acceleration/deceleration operation, which cannot be adequately tested in a component rig. At the present time, achievement of satisfactory transient operation appears to be a fuel control requirement due to the axially-staged arrangement of the Vorbix combustor. However, engine testing is needed for proper evaluation. A potential problem area that cannot be assessed from the Phase II rig testing is fuel decomposition and coking in the main zone fuel system under conditions of hot unstaging (rapid engine deceleration). The Phase III engine fuel control will be equipped with a nitrogen purge system to minimize this problem.

Although the Phase III program will provide a realistic demonstration of technology, it is recognized that this program will not provide a combustor configuration that is fully developed for commercial use. In particular, assessment of the long-term hardware durability and determination of the engine operating characteristics at altitude are beyond the scope of the current effort. However, the results obtained from the engine testing will permit an improved estimation of the pollution reduction technology achievable in practice, as well as the magnitude of additional development still required.

The engine test program will be conducted using an experimental JT9D engine installed in a sea-level static test cell. The first portion of the test program will consist of a minimum of 30 hours of steady-state operation, with the objective of measuring emission levels and characterizing combustor performance. The test matrix is presented in Table XXXV. This test matrix is structured around the four power settings defined by the EPA for the calculation of the EPA Parameter. Additional points have been added to fully characterize the part-power emissions characteristics. Variation of the pilot/main fuel split is a primary test variable at the higher engine power settings. The engine will be fitted with extensive first turbine vane thermocouple instrumentation during the initial steady-state testing to determine combustor exit temperature distribution. Following determination of the temperature profile under actual engine operating conditions, the thermocouple instrumentation will be removed to permit testing to the maximum engine thrust allowed by turbine durability limits.

TABLE XXXV

STEADY STATE PERFORMANCE/EMISSION TEST POINTS

| Main Power Points } Engine Conditions } | | Idle | | | Approach (30% power) | | | Climb-out (85% power) | | Take-off (100% power) |
|---|---|---|---|---|---|---|---|---|---|---|
| Secondary Power } Engine Conditions } | Sub-Idle | | Rich Idle | Sub-Approach | | Rich Approach | Sub-Climb-out | | Sub-Take-off | |
| Pilot/Main Fuel Staging Points | | | | | (2X) | | | (2X) | | (2X) |
| 12-Point Fixed Pollution Sampling | | X | | | X | | | X | | X |
| 24-Point Fixed Pollution Sampling | X | X | X | X | (3X) | X | X | (3X) | X | (3X) |
| Traverse Sampling | | X | | | X | | | X | | X |

Twenty hours of transient testing will be conducted following documentation of pollutant emission levels and demonstration of satisfactory combustor performance under steady-state conditions. This testing will consist of a series of progressively more rapid engine accelerations from idle to maximum allowable thrust and deceleration back to idle. The objective of this testing is to assess the transient operational characteristics of the combustor and fuel control concepts. Particular attention will be paid to passage through the pilot/main staging point. The Phase III fuel control is designed to permit considerable adjustment in fuel management at the staging point. No emissions data will be acquired during the transient portion of the engine test program.

Three exhaust gas sampling techniques will be investigated, as indicated in Table XXXV. The principal method will involve use of an exhaust plane rake having eight, equally spaced (45 degrees apart) radial arms, each having three sampling ports located at centers of equal areas. This rake will provide a total of 24 manifolded stationary sampling ports located within the core engine exhaust stream. Variations to be investigated include reduction to four radial arms, spaced 90 degrees apart, for a total of 12 sampling ports and traverse of the eight arm probe over a 45 degree sector, thus covering the engine exhaust plane at 5-degree intervals. A secondary objective of this portion of the program will be to assess sampling techniques for representative gas sample acquisition.

# APPENDIX A

# COMBUSTOR CONFIGURATIONS

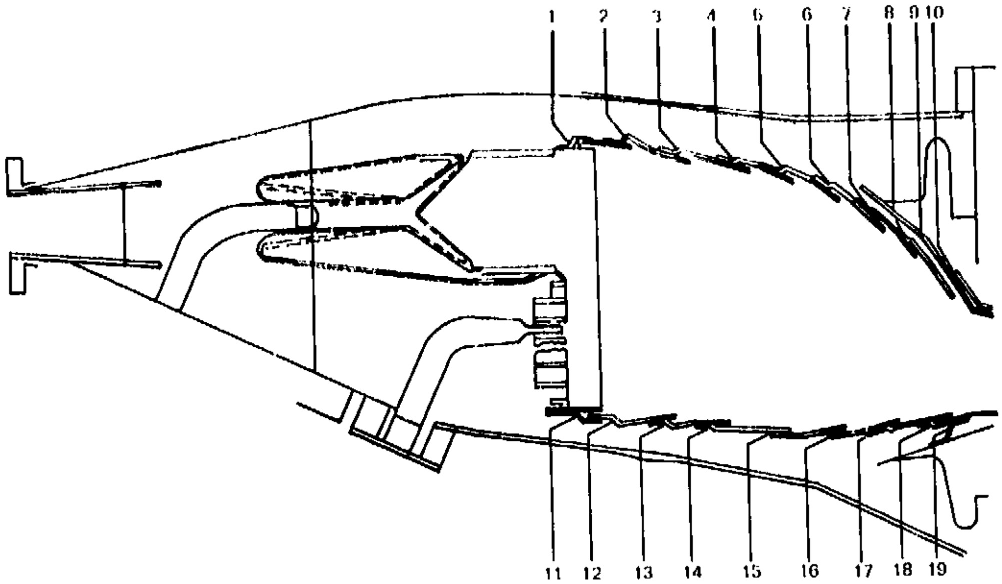

COOLING HOLE PATTERN

| INNER LINER | | | | OUTER LINER | | | |
|---|---|---|---|---|---|---|---|
| LOUVER | DIA. m X $10^{-3}$ | # HOLES | AREA $m^2$ X $10^{-4}$ | LOUVER | DIA. m X $10^{-3}$ | # HOLES | AREA $m^2$ X $10^{-4}$ |
| 1 | 1.32 | 85 | 1.17 | 11 | 1.32 | 110 | 1.51 |
| 2 | 1.32 | 85 | 1.17 | 12 | 1.32 | 110 | 1.51 |
| 3 | 1.32 | 85 | 1.17 | 13 | 1.32 | 110 | 1.51 |
| 4 | 1.32 | 85 | 1.17 | 14 | 1.32 | 110 | 1.51 |
| 5 | 1.32 | 92 | 1.26 | 15 | 1.93 | 60 | 1.75 |
| 6 | 1.32 | 81 | 1.11 | 16 | 2.16 | 60 | 2.19 |
| 7 | 1.32 | 92 | 1.26 | 17 | 2.31 | 60 | 2.52 |
| 8 | 1.32 | 122 | 1.67 | 18 | 2.36 | 60 | 2.63 |
| 9 | 1.59 | 85 | 1.68 | 19 | 1.59 | 110 | 2.17 |
| 10 | 1.59 | 85 | 1.68 | | | | |

| | | AREA $m^2$ X $10^{-4}$ |
|---|---|---|
| PILOT BURNER FLAMEHOLDER | 94 @ 0.80 X $10^{-2}$m DIAMETER | 47.26 |
| PILOT BURNER FLAMEHOLDER WEEP | 250 @ 0.254 X $10^{-2}$m DIAMETER | 12.67 |
| MAIN BURNER OUTER SWIRLER | 11 LEFT HAND SWIRLERS | 43.01 $A_{CD}$ (EFFECTIVE AREA) |
| MAIN BURNER INNER SWIRLER | 11 RIGHT HAND SWIRLERS | 34.42 $A_{CD}$ (EFFECTIVE AREA) |
| BULKHEAD COOLING | 170 @ 0.254 X $10^{-2}$m DIAMETER | 8.61 |
| DILUTION - LOUVER 2 (0.105 RAD. APART 0.052 RAD. OFF STRUT ℄) | 14 @ 1.913 X $10^{-2}$m DIAMETER | 40.23 |
| FINWALL® (INNER WALL) | 1.01% $W_{AB}$ (BURNER AIRFLOW) | |
| FINWALL® (OUTER WALL) | 1.23% $W_{AB}$ (BURNER AIRFLOW) | |
| SIDEWALL COOLING | 5.00% $W_{A4}$ (TOTAL AIRFLOW STATION 4) | |
| TURBINE COOLING (INNER WALL) | 7.5% $W_{A4}$ (TOTAL AIRFLOW STATION 4) | |
| TURBINE COOLING (OUTER WALL) | 8.4% $W_{A4}$ (TOTAL AIRFLOW STATION 4) | |
| PILOT BURNER NOZZLE P/N | DLN 27700-11, 10 LOCATIONS | |
| MAIN BURNER NOZZLE P/N | LOW ΔP; 11 LOCATIONS | |

MODIFICATIONS

PHASE II HYBRID BASELINE REF. P/N L-104974

*Figure A-1 Hybrid Combustor Configuration III*

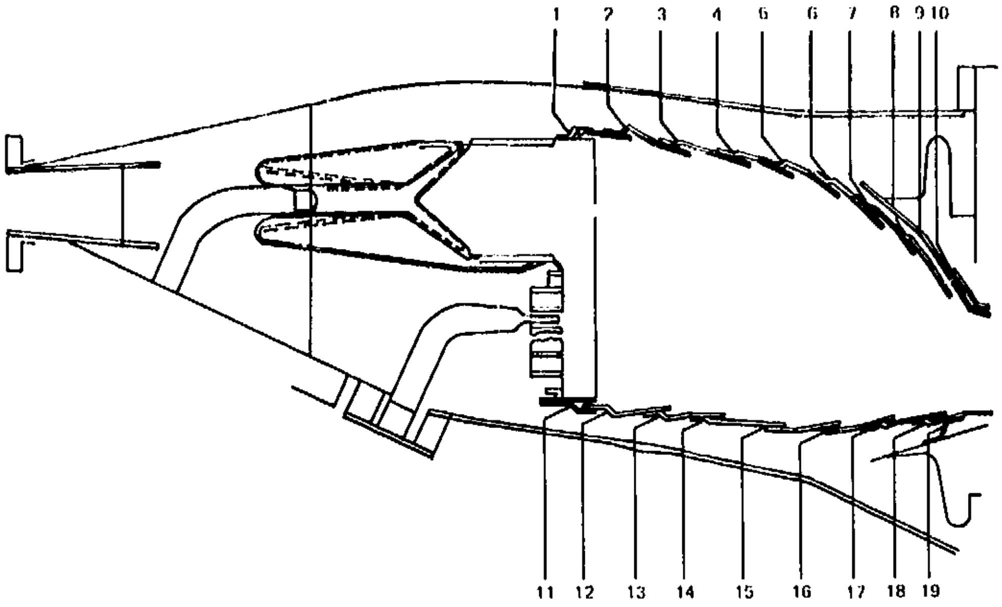

COOLING HOLE PATTERN

| INNER LINER | | | | OUTER LINER | | | |
|---|---|---|---|---|---|---|---|
| LOUVER | DIA. m X $10^{-3}$ | # HOLES | AREA $m^2$ X $10^{-4}$ | LOUVER | DIA. m X $10^{-3}$ | # HOLES | AREA $m^2$ X $10^{-4}$ |
| 1 | 1.32 | 85 | 1.17 | 11 | 1.32 | 110 | 1.51 |
| 2 | 1.32 | 85 | 1.17 | 12 | 1.32 | 110 | 1.51 |
| 3 | 1.32 | 85 | 1.17 | 13 | 1.32 | 110 | 1.51 |
| 4 | 1.32 | 85 | 1.17 | 14 | 1.32 | 110 | 1.51 |
| 5 | 1.32 | 92 | 1.26 | 15 | 1.93 | 60 | 1.75 |
| 6 | 1.32 | 81 | 1.11 | 16 | 2.16 | 60 | 2.19 |
| 7 | 1.32 | 92 | 1.26 | 17 | 2.31 | 60 | 2.52 |
| 8 | 1.32 | 122 | 1.67 | 18 | 2.36 | 60 | 2.63 |
| 9 | 1.59 | 85 | 1.68 | 19 | 1.59 | 110 | 2.17 |
| 10 | 1.59 | 85 | 1.68 | | | | |

| | | AREA $m^2$ X $10^{-4}$ |
|---|---|---|
| PILOT BURNER FLAMEHOLDER | 94 @ 0.80 X $10^{-2}$m DIAMETER | 47.26 |
| PILOT BURNER FLAMEHOLDER WEEP | | 7.43 $A_{CD}$ (EFFECTIVE AREA) |
| MAIN BURNER OUTER SWIRLER | 11 LEFT HAND SWIRLERS | 43.01 $A_{CD}$ (EFFECTIVE AREA) |
| MAIN BURNER INNER SWIRLER | 11 LEFT HAND SWIRLERS | 36.46 $A_{CD}$ (EFFECTIVE AREA) |
| BULKHEAD COOLING | 170 @ 0.254 X $10^{-2}$m DIAMETER | 8.61 |
| DILUTION - LOUVER 2 (0.105 RAD. APART -- 0.052 RAD. OFF STRUT ℄ ) | 14 @ 1.913 X $10^{-2}$m DIAMETER | 40.23 |
| FINWALL® (INNER WALL) | 1.01% $W_{AB}$ (BURNER AIRFLOW) | |
| FINWALL® (OUTER WALL) | 1.23% $W_{AB}$ (BURNER AIRFLOW) | |
| SIDEWALL COOLING | 5.00% $W_{A4}$ (TOTAL AIRFLOW -- STATION 4) | |
| TURBINE COOLING (INNER WALL) | 7.5% $W_{A4}$ (TOTAL AIRFLOW -- STATION 4) | |
| TURBINE COOLING (OUTER WALL) | 8.4% $W_{A4}$ (TOTAL AIRFLOW -- STATION 4) | |
| PILOT BURNER NOZZLE P/N | DLN 27700-11, 10 LOCATIONS | |
| MAIN BURNER NOZZLE - P/N | LOW ΔP, 11 LOCATIONS | |

MODIFICATIONS REFERENCE H1

REPLACE RIGHT HAND MAIN BURNER INNER SWIRLERS WITH LEFT HAND SWIRLERS

OPEN UP SPACING ON PILOT BURNER FLAMEHOLDER HOLES

REVISE PILOT BURNER FLAMEHOLDER ATTACHMENT AND WEEP AREA

*Figure A-2 Hybrid Combustor Configuration H2*

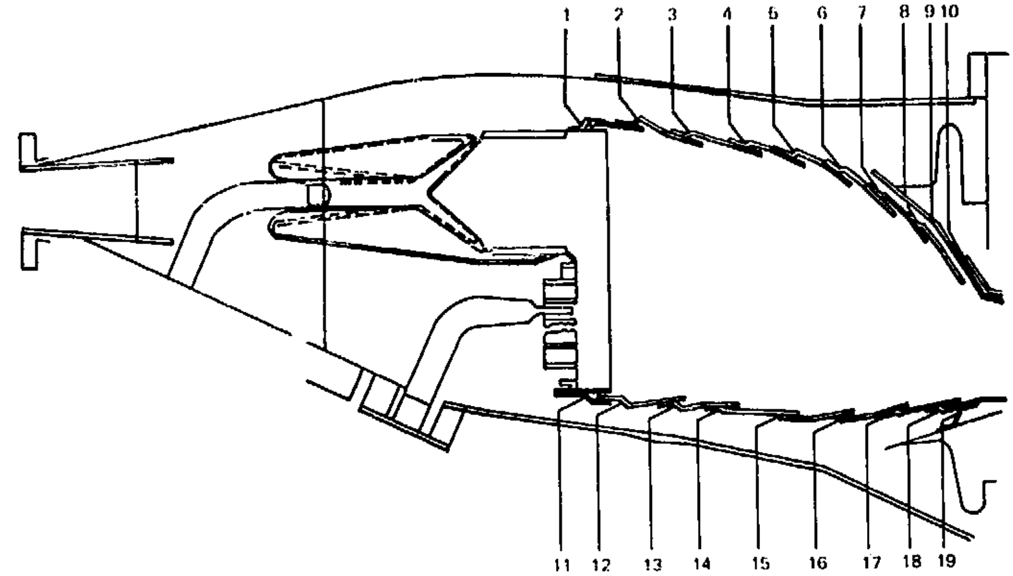

COOLING HOLE PATTERN

| INNER LINER | | | | OUTER LINER | | | |
|---|---|---|---|---|---|---|---|
| LOUVER | DIA. m X $10^{-3}$ | # HOLES | AREA $m^2 \times 10^{-4}$ | LOUVER | DIA. m X $10^{-3}$ | # HOLES | AREA $m^2 \times 10^{-4}$ |
| 1 | 1.32 | 85 | 1.17 | 11 | 1.32 | 110 | 1.51 |
| 2 | 1.32 | 85 | 1.17 | 12 | 1.32 | 110 | 1.51 |
| 3 | 1.32 | 85 | 1.17 | 13 | 1.32 | 110 | 1.51 |
| 4 | 1.32 | 85 | 1.17 | 14 | 1.32 | 110 | 1.51 |
| 5 | 1.32 | 92 | 1.26 | 15 | 1.93 | 60 | 1.75 |
| 6 | 1.32 | 81 | 1.11 | 16 | 2.16 | 60 | 2.19 |
| 7 | 1.32 | 92 | 1.26 | 17 | 2.31 | 60 | 2.52 |
| 8 | 1.32 | 122 | 1.67 | 18 | 2.36 | 60 | 2.63 |
| 9 | 1.59 | 85 | 1.68 | 19 | 1.59 | 110 | 2.17 |
| 10 | 1.59 | 85 | 1.68 | | | | |

| | | AREA $m^2 \times 10^{-4}$ |
|---|---|---|
| PILOT BURNER FLAMEHOLDER | 94 @ $0.80 \times 10^{-2}$ DIAMETER | 47.26 |
| PILOT BURNER FLAMEHOLDER WEEP | | 7.43 $A_{CD}$ (EFFECTIVE AREA) |
| PILOT BURNER FLAMEHOLDER COOLING (ON INNER WALL) | 38 @ $0.254 \times 10^{-2}$m DIAMETER | 1.92 |
| MAIN BURNER INNER SWIRLER | 11 RIGHT HAND SWIRLERS | 25.34 $A_{CD}$ (EFFECTIVE AREA) |
| BULKHEAD COOLING | 170 @ $0.254 \times 10^{-2}$m DIAMETER | 8.61 |
| DILUTION - LOUVER 2 (6° APART - 3° OFF STRUT ℄ ) | 14 @ $1.913 \times 10^{-2}$m DIAMETER | 40.23 |
| DILUTION - LOUVER 2 (0.105 RAD. APART - 0.0528 RAD. OFF STRUT ℄ ) | 11 SLOTS $1.524 \times 0.627 \times 10^{-2}$m | 57.63 |
| DILUTION LOUVER 14 (IN LINE WITH MAIN BURNER NOZZLE) | 12 @ $1.885 \times 10^{-2}$m DIAMETER | 33.52 |
| DILUTION LOUVER 15 (BETWEEN MAIN BURNER NOZZLE) | | |
| FINWALL® (INNER WALL) | 1.01% $W_{AB}$ (BURNER AIRFLOW) | |
| FINWALL® (OUTER WALL) | 1.23% $W_{AB}$ (BURNER AIRFLOW) | |
| SIDEWALL COOLING | 5.00% $W_{A4}$ (TOTAL AIRFLOW - STATION 4) | |
| TURBINE COOLING (INNER WALL) | 7.5% $W_{A4}$ (TOTAL AIRFLOW - STATION 4) | |
| TURBINE COOLING (OUTER WALL) | 8.4% $W_{A4}$ (TOTAL AIRFLOW - STATION 4) | |
| PILOT BURNER NOZZLE - P/N | 27700-11, 10 LOCATIONS | |
| MAIN BURNER NOZZLE P/N | LOW ΔP, 11 LOCATIONS | |

MODIFICATIONS REFERENCE H2

BLOCK MAIN BURNER OUTER SWIRLER
REDUCE MAIN BURNER INNER SWIRLER AREA
INSTALL COOLING HOLES ON INNER LINER TRAILING EDGE OF PILOT BURNER FLAMEHOLDER
ADD DILUTION HOLES TO OUTER LINER ROWS 14 AND 15

*Figure A-3 Hybrid Combustor Configuration H3*

C-2

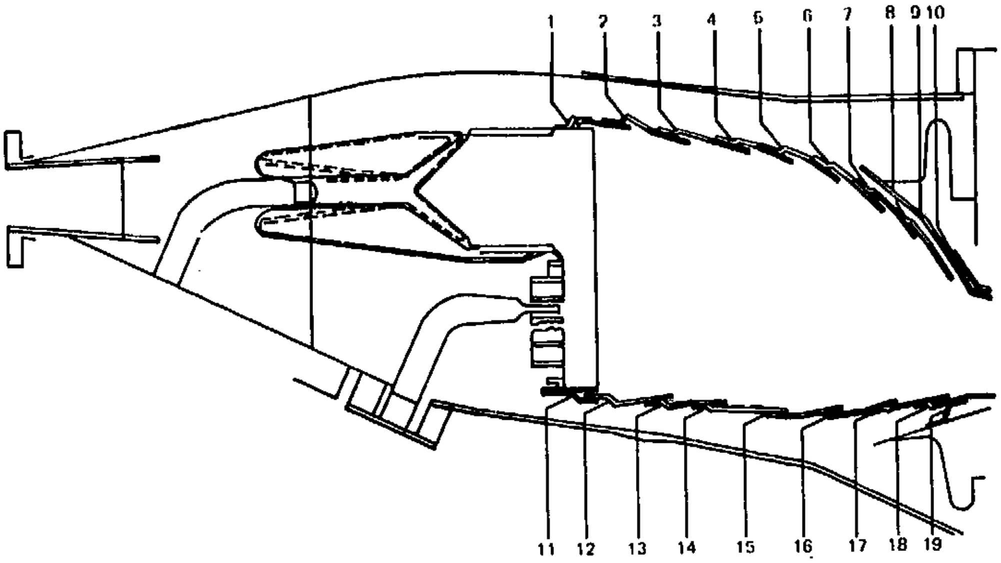

COOLING HOLE PATTERN

| INNER LINER | | | | OUTER LINER | | | |
|---|---|---|---|---|---|---|---|
| LOUVER | DIA. m X $10^{-3}$ | # HOLES | AREA $m^2 \times 10^{-4}$ | LOUVER | DIA. m X $10^{-3}$ | # HOLES | AREA $m^2 \times 10^{-4}$ |
| 1 | 1.32 | 85 | 1.17 | 11 | 1.32 | 110 | 1.51 |
| 2 | 1.32 | 85 | 1.17 | 12 | 1.32 | 110 | 1.51 |
| 3 | 1.32 | 85 | 1.17 | 13 | 1.32 | 110 | 1.51 |
| 4 | 1.32 | 85 | 1.17 | 14 | 1.32 | 110 | 1.51 |
| 5 | 1.32 | 92 | 1.26 | 15 | 1.93 | 60 | 1.75 |
| 6 | 1.32 | 81 | 1.11 | 16 | 2.16 | 60 | 2.19 |
| 7 | 1.32 | 92 | 1.26 | 17 | 2.31 | 60 | 2.52 |
| 8 | 1.32 | 122 | 1.67 | 18 | 2.36 | 60 | 2.63 |
| 9 | 1.59 | 85 | 1.68 | 19 | 1.59 | 110 | 2.17 |
| 10 | 1.59 | 85 | 1.68 | | | | |

| | | AREA $m^2 \times 10^{-4}$ |
|---|---|---|
| PILOT BURNER FLAMEHOLDER | | |
| PILOT BURNER FLAMEHOLDER WEEP | 94 @ $0.80 \times 10^{-2}$m DIAMETER | |
| PILOT BURNER FLAMEHOLDER COOLING (ON INNER WALL) | | 47.26 |
| MAIN BURNER INNER SWIRLER | | 7.43 $A_{CD}$ (EFFECTIVE AREA) |
| BULKHEAD COOLING | 38 @ $0.254 \times 10^{-2}$m DIAMETER | 1.92 |
| DILUTION – LOUVER 2 (6° APART - 3° OFF STRUT ℄) | 11 RIGHT HAND SWIRLERS | 25.34 $A_{CD}$ (EFFECTIVE AREA) |
| DILUTION - LOUVER 2 (0.105 RAD. APART – 0.062 RAD. OFF STRUT ℄ ℄ ) | 170 @ $0.254 \times 10^{-2}$m DIAMETER | 8.61 |
| | 14 @ $1.913 \times 10^{-2}$m DIAMETER | 40.23 |
| DILUTION - LOUVER 14 (IN LINE WITH MAIN BURNER NOZZLE) | 11 SLOTS $1.524 \times 3.627 \times 10^{-2}$m | 57.63 |
| DILUTION – LOUVER 15 (BETWEEN MAIN BURNER NOZZLE) | 12 @ $1.885 \times 10^{-2}$m DIAMETER | 33.52 |

| | |
|---|---|
| FINWALL®(INNER WALL) | 1.01% $W_{AB}$ (BURNER AIRFLOW) |
| FINWALL®(OUTER WALL) | 1.23% $W_{AB}$ (BURNER AIRFLOW) |
| SIDEWALL COOLING | 5.00% $W_{A4}$ (TOTAL AIRFLOW - STATION 4) |
| TURBINE COOLING (INNER WALL) | 7.5% $W_{A4}$ (TOTAL AIRFLOW - STATION 4) |
| TURBINE COOLING (OUTER WALL) | 8.4% $W_{A4}$ (TOTAL AIRFLOW – STATION 4) |
| *PILOT BURNER NOZZLE – P/N | DLN 34800 10 LOCATIONS (SOLID SPRAY CONE) |
| MAIN BURNER NOZZLE P/N | LOW ΔP 11 LOCATIONS |

MODIFICATIONS REFERENCE H3

INSTALL SOLID SPRAY CONE NOZZLES IN PILOT

*Figure A-4 Hybrid Combustor Configuration H4*

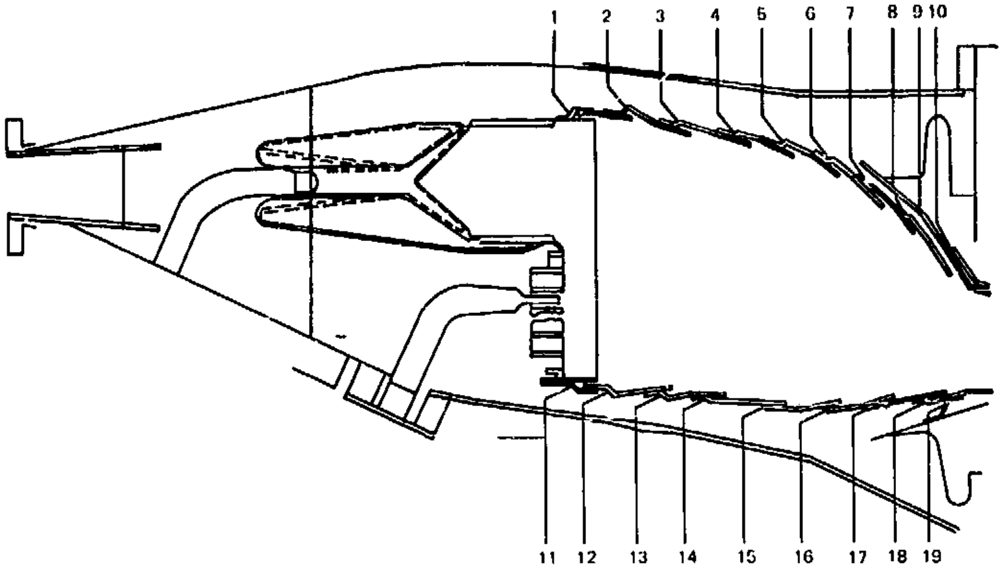

COOLING HOLE PATTERN

| INNER LINER | | | | OUTER LINER | | | |
|---|---|---|---|---|---|---|---|
| LOUVER | DIA. m X $10^{-3}$ | # HOLES | AREA $m^2 \times 10^{-4}$ | LOUVER | DIA. m X $10^{-3}$ | # HOLES | AREA $m^2 \times 10^{-4}$ |
| 1 | 1.32 | 85 | 1.17 | 11 | 1.32 | 110 | 1.51 |
| 2 | 1.32 | 85 | 1.17 | 12 | 1 32 | 110 | 1.51 |
| 3 | 1.32 | 85 | 1.17 | 13 | 1.32 | 110 | 1.51 |
| 4 | 1.32 | 85 | 1.17 | 14 | 1.32 | 110 | 1.51 |
| 5 | 1.32 | 92 | 1.26 | 15 | 1.93 | 60 | 1.75 |
| 6 | 1.32 | 81 | 1.11 | 16 | 2.16 | 60 | 2.19 |
| 7 | 1.32 | 92 | 1.26 | 17 | 2.31 | 60 | 2.52 |
| 8 | 1.32 | 122 | 1.67 | 18 | 2.36 | 60 | 2.63 |
| 9 | 1.59 | 85 | 1.68 | 19 | 1.59 | 110 | 2.17 |
| 10 | 1.59 | 85 | 1.68 | | | | |

| | | AREA $m^2 \times 10^{-4}$ |
|---|---|---|
| PILOT BURNER FLAMEHOLDER | 75 @ 0.80 X $10^{-2}$m DIAMETER | 37.709 |
| PILOT BURNER FLAMEHOLDER WEEP | | 7.43 $A_{CD}$ (EFFECTIVE AREA) |
| MAIN BURNER OUTER SWIRLER | 11 LEFT HAND SWIRLERS | 62.31 $A_{CD}$ (EFFECTIVE AREA) |
| MAIN BURNER INNER SWIRLER | 11 RIGHT HAND SWIRLERS | 34.42 $A_{CD}$ (EFFECTIVE AREA) |
| BULKHEAD COOLING | 17.0 @ 0.254 X $10^{-2}$m DIAMETER | 8,61 |
| DILUTION – LOUVER 2 (6° APART - 3° OFF STRUT ℄) | 14 @ 1.913 X $10^{-2}$m DIAMETER | 40.23 |
| FLAMEHOLDER COOLING (ON INNER WALL) | 38 @ 0.254 X $10^{-2}$m DIAMETER | 1,92 |
| FINWALL®(INNER WALL) | 1.01% $W_{AB}$ (BURNER AIRFLOW) | |
| FINWALL®(OUTER WALL) | 1.23% $W_{AB}$ (BURNER AIRFLOW) | |
| SIDEWALL COOLING | 5.00% $W_{A4}$ (TOTAL AIRFLOW -- STATION 4) | |
| TURBINE COOLING (INNER WALL) | 7.5% $W_{A4}$ (TOTAL AIRFLOW -- STATION 4) | |
| TURBINE COOLING (OUTER WALL) | 8.4% $W_{A4}$ (TOTAL AIRFLOW -- STATION 4) | |
| PILOT BURNER NOZZLE -- P/N | DLN 27700-11 10 LOCATIONS | |
| MAIN BURNER NOZZLE -- P/N | LOW ΔP11 LOCATIONS | |

MODIFICATIONS REFERENCE H4

REDUCE PILOT BURNER PRE-MIX PASSAGE AIRFLOW
INCREASE MAIN BURNER SWIRLER AIRFLOW (REMOVE BLOCKAGE RING)
INSTALL HOLLOW SPRAY CONE PILOT BURNER NOZZLES
REMOVE OUTER LINER DILUTION HOLES

*Figure A-5 Hybrid Combustor Configuration H5*

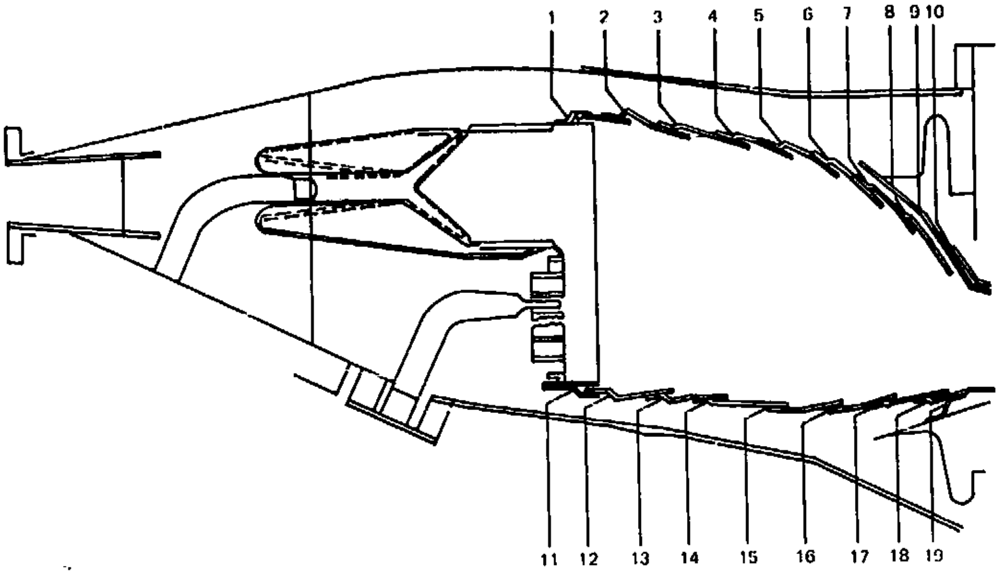

COOLING HOLE PATTERN

| INNER LINER | | | | OUTER LINER | | | |
|---|---|---|---|---|---|---|---|
| LOUVER | DIA. $m \times 10^{-3}$ | = HOLES | AREA $m^2 \times 10^{-4}$ | LOUVER | DIA. $m \times 10^{-3}$ | = HOLES | AREA $m^2 \times 10^{-4}$ |
| 1 | 1.32 | 85 | 1.17 | 11 | 1.32 | 110 | 1.51 |
| 2 | 1.32 | 85 | 1.17 | 12 | 1.32 | 110 | 1.51 |
| 3 | 1.32 | 85 | 1.17 | 13 | 1.32 | 110 | 1.51 |
| 4 | 1.32 | 85 | 1.17 | 14 | 1.32 | 110 | 1.51 |
| 5 | 1.32 | 92 | 1.26 | 15 | 1.93 | 60 | 1.75 |
| 6 | 1.32 | 81 | 1.11 | 16 | 2.16 | 60 | 2.19 |
| 7 | 1.32 | 92 | 1.26 | 17 | 2.31 | 60 | 2.52 |
| 8 | 1.32 | 122 | 1.67 | 18 | 2.36 | 60 | 2.63 |
| 9 | 1.59 | 85 | 1.68 | 19 | 1.59 | 110 | 2.17 |
| 10 | 1.59 | 85 | 1.68 | | | | |

| | | AREA $m^2 \times 10^{-4}$ |
|---|---|---|
| PILOT BURNER FLAMEHOLDER | 94 @ $0.80 \times 10^{-2}$ DIAMETER | 47.26 $A_{CD}$ (EFFECTIVE AREA) |
| PILOT BURNER FLAMEHOLDER WEEP | | 7.43 $A_{CD}$ (EFFECTIVE AREA) |
| MAIN BURNER OUTER SWIRLER | 11 LEFT HAND SWIRLERS | 62.31 $A_{CD}$ (EFFECTIVE AREA) |
| MAIN BURNER INNER SWIRLER | 11 RIGHT HAND SWIRLERS | 34.42 $A_{CD}$ (EFFECTIVE AREA) |
| BULKHEAD COOLING | 172 @ $0.411 \times 10^{-2}$m DIAMETER | 22.87 |
| FLAMEHOLDER COOLING (ON OUTER WALL) | 39 @ $0.254 \times 10^{-2}$m DIAMETER | 1.97 |
| FLAMEHOLDER COOLING (ON INNER WALL) | 38 @ $0.254 \times 10^{-2}$ m DIAMETER | 1.92 |
| FINWALL® (INNER WALL) | 1.01% $W_{AB}$ (BURNER AIRFLOW) | |
| FINWALL® (OUTER WALL) | 1.23% $W_{AB}$ (BURNER AIRFLOW) | |
| SIDEWALL COOLING | 5.00% $W_{A4}$ (TOTAL AIRFLOW – STATION 4) | |
| TURBINE COOLING (INNER WALL) | 7.5% $W_{A4}$ (TOTAL AIRFLOW – STATION 4) | |
| TURBINE COOLING (OUTER WALL) | 8.4% $W_{A4}$ (TOTAL AIRFLOW – STATION 4) | |
| PILOT BURNER NOZZLE – P/N | DLN 27700-11 10 LOCATIONS | |
| MAIN BURNER NOZZLE – P/N | LOW $\Delta P$ 11 LOCATIONS | |

MODIFICATIONS REFERENCE H5

ELIMINATE INNER LINER DILUTION COOLING
ADD 35% OF DILUTION AIR TO BULKHEAD COOLING
ADD 65% OF DILUTION AIR TO OUTER LINER FLAMEHOLDER COOLING
PRIMARY FUEL INJECTORS EXTENDED ONE INCH DOWNSTREAM
INCREASE PILOT BURNER PREMIX PASSAGE AIRFLOW

*Figure A-6 Hybrid Combustor Configuration H6*

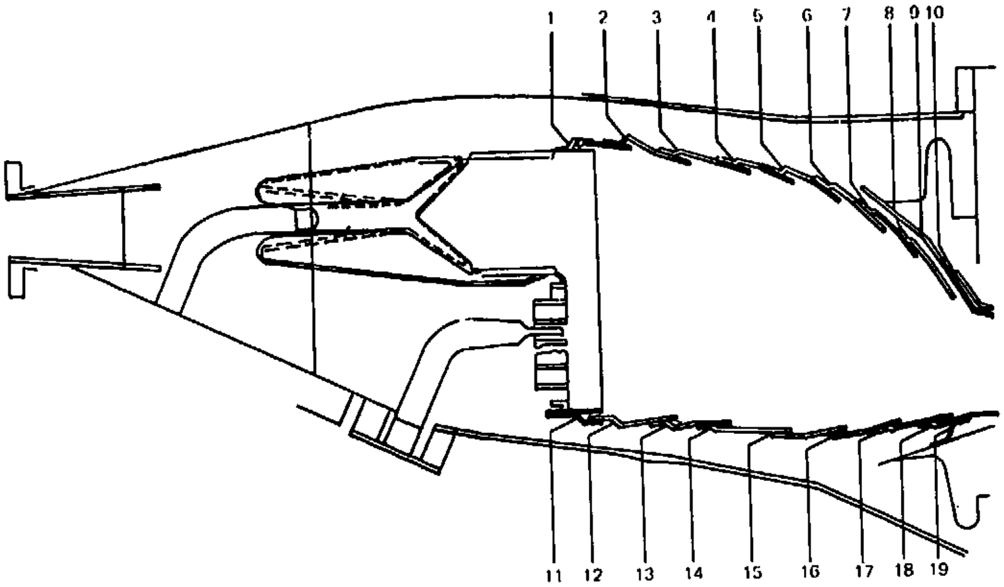

COOLING HOLE PATTERN

| INNER LINER | | | | | OUTER LINER | | | |
|---|---|---|---|---|---|---|---|---|
| LOUVER | DIA. m X $10^{-3}$ | # HOLES | AREA $m^2$ X $10^{-4}$ | | LOUVER | DIA. m X $10^{-3}$ | # HOLES | AREA $m^2$ X $10^{-4}$ |
| 1 | 1.32 | 85 | 1.17 | | 11 | 1.32 | 110 | 1.51 |
| 2 | 1.32 | 85 | 1.17 | | 12 | 1.32 | 110 | 1.51 |
| 3 | 1.32 | 85 | 1.17 | | 13 | 1.32 | 110 | 1.51 |
| 4 | 1.32 | 85 | 1.17 | | 14 | 1.32 | 110 | 1.51 |
| 5 | 1.32 | 92 | 1.26 | | 15 | 1.93 | 60 | 1.75 |
| 6 | 1.32 | 81 | 1.11 | | 16 | 2.16 | 60 | 2.19 |
| 7 | 1.32 | 92 | 1.26 | | 17 | 2.31 | 60 | 2.52 |
| 8 | 1.32 | 122 | 1.67 | | 18 | 2.36 | 60 | 2.63 |
| 9 | 1.59 | 85 | 1.68 | | 19 | 1.59 | 110 | 2.17 |
| 10 | 1.59 | 85 | 1.68 | | | | | |

| | | AREA $m^2$ X $10^{-4}$ |
|---|---|---|
| PILOT BURNER FLAMEHOLDER | 94 @ 0.80 X $10^{-2}$m DIAMETER | 47.26 |
| PILOT BURNER FLAMEHOLDER WEEP | | 7.43 $A_{CD}$ (EFFECTIVE AREA) |
| MAIN BURNER OUTER SWIRLER | 11 LEFT HAND SWIRLERS | 62.31 $A_{CD}$ (EFFECTIVE AREA) |
| MAIN BURNER INNER SWIRLER | 11 RIGHT HAND SWIRLERS | 34.42 $A_{CD}$ (EFFECTIVE AREA) |
| BULKHEAD COOLING | 172 @ 0.411 X $10^{-2}$m DIAMETER | 22.87 |
| FLAMEHOLDER COOLING (ON OUTER WALL) | 39 @ 0.254 X $10^{-2}$m DIAMETER | 1.97 |
| FLAMEHOLDER COOLING (ON INNER WALL) | 38 @ 0.254 X $10^{-2}$m DIAMETER | 1.92 |
| FINWALL® (INNER WALL) | 1.01% $W_{AB}$ (BURNER AIRFLOW) | |
| FINWALL ® (OUTER WALL) | 1.23% $W_{AB}$ (BURNER AIRFLOW) | |
| SIDEWALL COOLING | 5.00% $W_{A4}$ (TOTAL AIRFLOW – STATION 4) | |
| TURBINE COOLING (INNER WALL) | 7.5% $W_{A4}$ (TOTAL AIRFLOW – STATION 4) | |
| TURBINE COOLING (OUTER WALL) | 8.4% $W_{A4}$ (TOTAL AIRFLOW – STATION 4) | |
| PILOT BURNER NOZZLE – P/N | DLN 34800 10 LOCATIONS | |
| MAIN BURNER NOZZLE – P/N | LOW ΔP 11 LOCATIONS | |

MODIFICATIONS REFERENCE H6

INSTALL SOLID CONE PILOT BURNER FUEL NOZZLES

*Figure A-7 Hybrid Combustor Configuration H7*

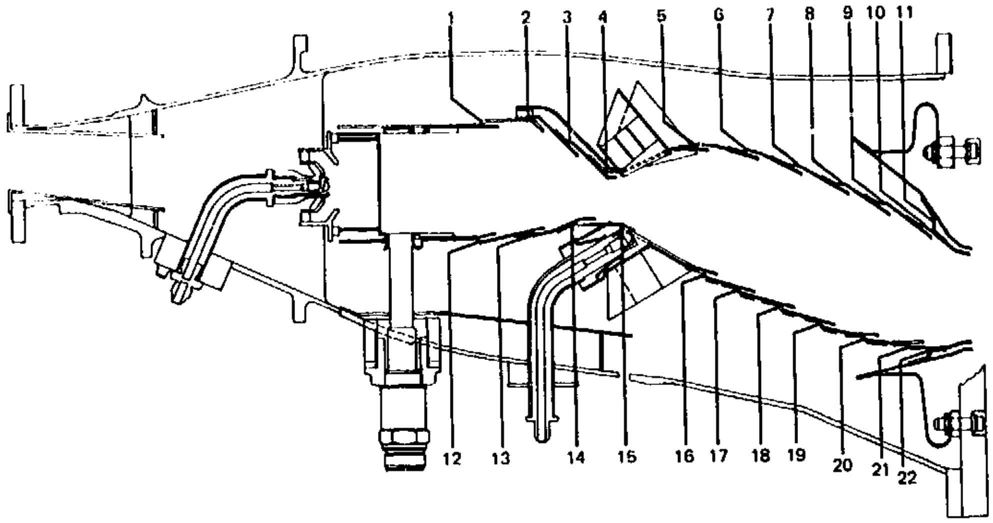

COOLING HOLE PATTERN

| INNER LINER | | | | OUTER LINER | | | |
|---|---|---|---|---|---|---|---|
| LOUVER | DIA. $mX10^{-3}$ | # HOLES | AREA $m^2X10^{-4}$ | LOUVER | DIA. $mX10^{-3}$ | # HOLES | AREA $m^2X10^{-4}$ |
| 1 | 1.79 | 85 | 2.11 | 12 | 1.79 | 110 | 2.73 |
| 2 | 1.79 | 85 | 2.11 | 13 | 1.79 | 110 | 2.73 |
| 3 | 1.79 | 110 | 2.73 | 14 | 1.79 | 130 | 3.23 |
| 4 | 2.08 | 110 | 3.75 | 15 | 2.08 | 130 | 4.43 |
| 5 | 1.93 | 85 | 2.48 | 16 | 1.61 | 99 | 2.02 |
| 6 | 1.32 | 85 | 1.17 | 17 | 1.61 | 99 | 2.02 |
| 7 | 1.32 | 85 | 1.17 | 18 | 1.32 | 118 | 1.62 |
| 8 | 1.32 | 85 | 1.17 | 19 | 1.32 | 95 | 1.30 |
| 9 | 1.32 | 85 | 1.17 | 20 | 1.32 | 106 | 1.45 |
| 10 | 1.32 | 85 | 1.17 | 21 | 1.79 | 85 | 2.11 |
| 11 | 1.32 | 85 | 1.17 | 22 | 1.32 | 110 | 1.50 |

| | | AREA $m^2X10^{-4}$ |
|---|---|---|
| PILOT BURNER SWIRLER | 7 LEFT HAND SWIRLERS | 23.49 $A_{CD}$ (EFFECTIVE AREA) |
| PILOT BURNER SWIRLER COOLING | 224 @ 0.140 X $10^{-2}$m DIAM | 3.43 |
| MAIN BURNER SWIRLER 28 P/N L-104377 ALL RIGHT HAND | | 119.23 $A_{CD}$ (EFFECTIVE AREA) |
| BULKHEAD COOLING 20 @ 0.282 X $10^{-2}$m DIAMETER | 558 @ 0.102 X $10^{-2}$m DIAM | 5.77 |
| FINWALL®(INNER WALL) | 1.06% $W_{AB}$ (BURNER AIRFLOW) | |
| FINWALL®(OUTER WALL) | 1.14% $W_{AB}$ (BURNER AIRFLOW) | |
| FINWALL®(CYLINDERS) | 2.26% $W_{AB}$ (BURNER AIRFLOW) | |
| SIDEWALL COOLING | 5.00% $W_{A4}$ (TOTAL AIRFLOW – STATION 4) | |
| TURBINE COOLING (INNER WALL) | 7.6% $W_{A4}$ (TOTAL AIRFLOW – STATION 4) | |
| TURBINE COOLING (OUTER WALL) | 8.4% $W_{A4}$ (TOTAL AIRFLOW – STATION 4) | |
| PILOT NOZZLE P/N | DLN 27700-13 7 LOCATIONS | |
| MAIN BURNER NOZZLE P/N | DLN 27700-11 13 LOCATIONS | |

MODIFICATIONS

PHASE II VORBIX BASELINE – REF. P/N L-104838

*Figure A-8 Vorbix Combustor Configuration S11*

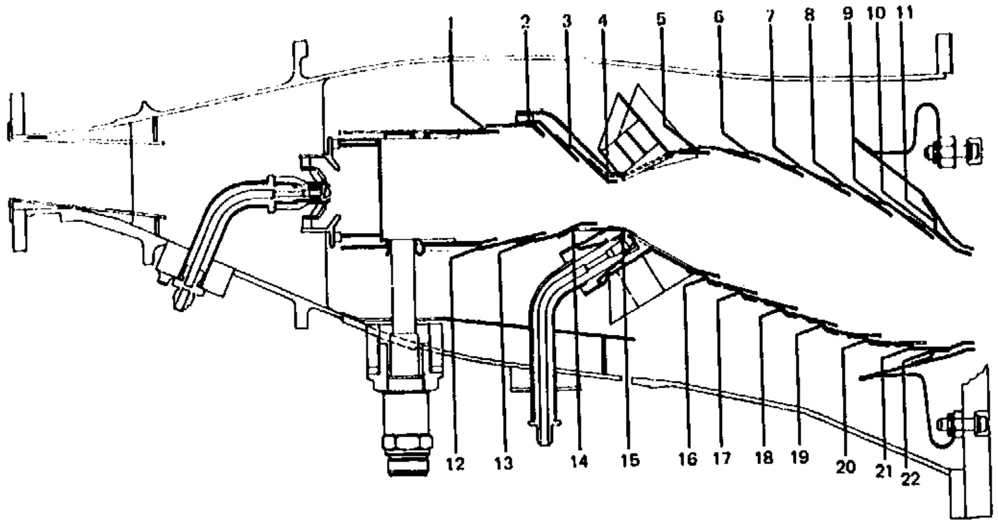

COOLING HOLE PATTERN

| INNER LINER | | | | OUTER LINER | | | |
|---|---|---|---|---|---|---|---|
| LOUVER | DIA. mX10$^{-3}$ | # HOLES | AREA m$^2$X10$^{-4}$ | LOUVER | DIA. mX10$^{-3}$ | # HOLES | AREA m$^2$X10$^{-4}$ |
| 1 | 1.79 | 85 | 2.11 | 12 | 1.79 | 110 | 2.73 |
| 2 | 1.79 | 85 | 2.11 | 13 | 1.79 | 110 | 2.73 |
| 3 | 1.79 | 110 | 2.73 | 14 | 1.79 | 130 | 3.23 |
| 4 | 2.08 | 110 | 3.75 | 15 | 2.08 | 130 | 4.43 |
| 5 | 1.93 | 85 | 2.48 | 16 | 1.61 | 99 | 2.02 |
| 6 | 1.32 | 85 | 1.17 | 17 | 1.61 | 99 | 2.02 |
| 7 | 1.32 | 85 | 1.17 | 18 | 1.32 | 118 | 1.62 |
| 8 | 1.32 | 85 | 1.17 | 19 | 1.32 | 95 | 1.30 |
| 9 | 1.32 | 85 | 1.17 | 20 | 1.32 | 106 | 1.45 |
| 10 | 1.32 | 85 | 1.17 | 21 | 1.79 | 85 | 2.11 |
| 11 | 1.32 | 85 | 1.17 | 22 | 1.32 | 110 | 1.50 |

| | | AREA m$^2$ X 10$^{-4}$ |
|---|---|---|
| PILOT BURNER SWIRLER | 7 LEFT HAND SWIRLERS | 23.49 $A_{CD}$ (EFFECTIVE AREA) |
| PILOT BURNER SWIRLER COOLING | 224 @ 0.140 X 10$^{-2}$m DIAMETER | 3.43 |
| MAIN BURNER SWIRLER 28 ALTERNATING SWIRL DIRECTION – P/N L-104377 | | 119.23 $A_{CD}$ (EFFECTIVE AREA) |
| BULKHEAD COOLING 20 @ 0.282 X 10$^{-2}$m DIAMETER | 558 @ 0.102 X 10$^{-2}$m DIAMETER | 5.79<br>2.63 |
| FINWALL®(INNER WALL) | 1.06% $W_{AB}$ (BURNER AIRFLOW) | |
| FINWALL®(OUTER WALL) | 1.14% $W_{AB}$ (BURNER AIRFLOW) | |
| FINWALL®(CYLINDERS) | 2.26% $W_{AB}$ (BURNER AIRFLOW) | |
| SIDEWALL COOLING | 5.00 $W_{A4}$ (TOTAL AIRFLOW – STATION 4) | |
| TURBINE COOLING (INNER WALL) | 7.5% $W_{A4}$ (TOTAL AIRFLOW STATION 4) | |
| TURBINE COOLING (OUTER WALL) | 8.4% $W_{A4}$ (TOTAL AIRFLOW – STATION 4) | |
| PILOT BURNER NOZZLE P/N | DLN 27700-13 7 LOCATIONS | |
| MAIN BURNER NOZZLE P/N | DLN 27700-11 13 LOCATIONS | |

MODIFICATIONS REFERENCE 11

INSTALL ALTERNATE ROTATING MAIN BURNER SWIRLERS

INSTALL MAIN BURNER NOZZLE COOLING

*Figure A-9 Vorbix Combustor Configuration S12*

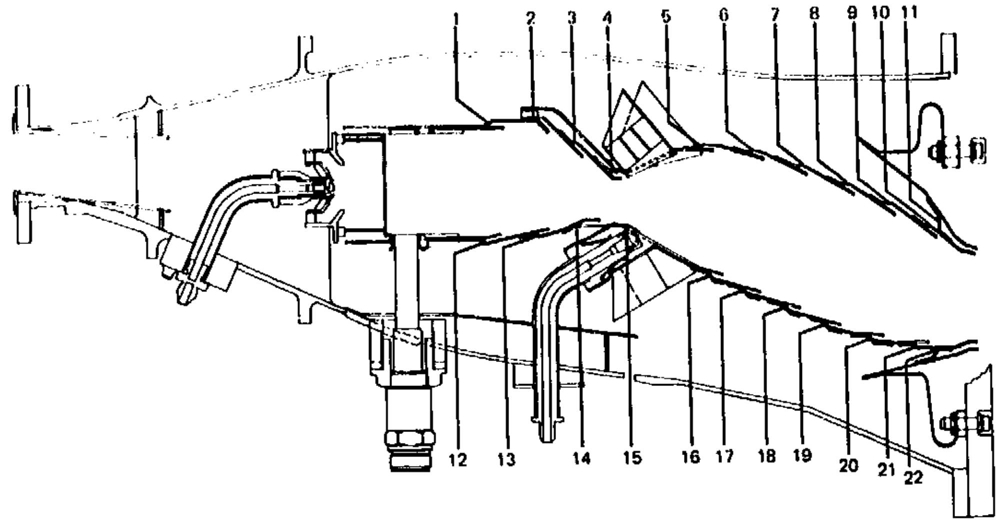

COOLING HOLE PATTERN

| INNER LINER | | | | OUTER LINER | | | |
|---|---|---|---|---|---|---|---|
| LOUVER | DIA. $m \times 10^{-3}$ | # HOLES | AREA $m^2 \times 10^{-4}$ | LOUVER | DIA. $m \times 10^{-3}$ | # HOLES | AREA $m^2 \times 10^{-4}$ |
| 1 | 1.79 | 85 | 2.11 | 12 | 1.79 | 110 | 2.73 |
| 2 | 1.79 | 85 | 2.11 | 13 | 1.79 | 110 | 2.73 |
| 3 | 1.79 | 110 | 2.73 | 14 | 1.79 | 130 | 3.23 |
| 4 | 2.08 | 110 | 3.75 | 15 | 2.08 | 130 | 4.43 |
| 5 | 1.93 | 85 | 2.48 | 16 | 1.61 | 99 | 2.02 |
| 6 | 1.32 | 85 | 1.17 | 17 | 1.61 | 99 | 2.02 |
| 7 | 1.32 | 85 | 1.17 | 18 | 1.32 | 118 | 1.62 |
| 8 | 1.32 | 85 | 1.17 | 19 | 1.32 | 95 | 1.30 |
| 9 | 1.32 | 85 | 1.17 | 20 | 1.32 | 106 | 1.45 |
| 10 | 1.32 | 85 | 1.17 | 21 | 1.79 | 85 | 2.11 |
| 11 | 1.32 | 85 | 1.17 | 22 | 1.32 | 110 | 1.50 |

| | | : AREA $m^2 \times 10^{-4}$ |
|---|---|---|
| PILOT BURNER SWIRLER | 7 LEFT HAND SWIRLERS | |
| PILOT BURNER SWIRLER COOLING | 224 @ $0.140 \times 10^{-2}$m DIAMETER | 23.49 $A_{CD}$ (EFFECTIVE AREA) |
| MAIN BURNER SWIRLER 28 ALTERNATING SWIRL DIRECTION — P/N L-104377 | 558 @ $0.102 \times 10^{-2}$m DIAMETER | 3.43 |
| BULKHEAD COOLING 20 @ $0.282 \times 10^{-2}$m DIAMETER | 52 @ $0.254 \times 10^{-2}$m DIAMETER | 119.23 $A_{CD}$ (EFFECTIVE AREA) |
| MAIN BURNER NOZZLE COOLING AIR | | 5.77 |
| FINWALL® (INNER WALL) | 1.06% $W_{AB}$ (BURNER AIRFLOW) | 2.63 |
| FINWALL® (OUTER WALL) | 1.14% $W_{AB}$ (BURNER AIRFLOW) | |
| FINWALL® (CYLINDERS) | 2.26% $W_{AB}$ (BURNER AIRFLOW) | |
| SIDEWALL COOLING | 5.00% $W_{A4}$ (TOTAL AIRFLOW – STATION 4) | |
| TURBINE COOLING (INNER WALL) | 7.5% $W_{A4}$ (TOTAL AIRFLOW – STATION 4) | |
| TURBINE COOLING (OUTER WALL) | 8.4% $W_{A4}$ (TOTAL AIRFLOW – STATION 4) | |
| PILOT BURNER NOZZLE P/N | DLN 27700-13 7 LOCATIONS | |
| MAIN BURNER NOZZLE P/N | DLN 27700-11 7 LOCATIONS | |

MODIFICATIONS REFERENCE S12

RUN 7 MAIN BURNER FUEL INJECTOR NOZZLES AS SHOWN

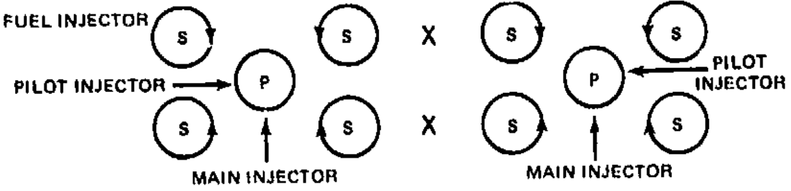

*Figure A-10 Vorbix Combustor Configuration S13*

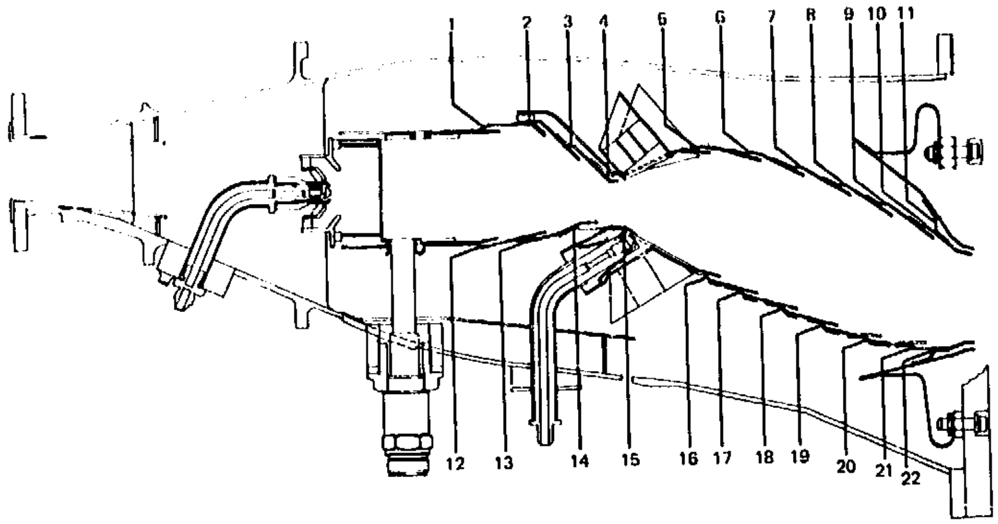

COOLING HOLE PATTERN

| INNER LINER | | | | OUTER LINER | | | |
|---|---|---|---|---|---|---|---|
| LOUVER | DIA. $m \times 10^{-3}$ | # HOLES | AREA $m^2 \times 10^{-4}$ | LOUVER | DIA. $m \times 10^{-3}$ | # HOLES | AREA $m^2 \times 10^{-4}$ |
| 1 | 1.79 | 85 | 2.11 | 12 | 1.79 | 110 | 2.73 |
| 2 | 1.79 | 85 | 2.11 | 13 | 1.79 | 110 | 2.73 |
| 3 | 1.79 | 110 | 2.73 | 14 | 1.79 | 130 | 3.23 |
| 4 | 2.08 | 110 | 3.75 | 15 | 2.08 | 130 | 4.43 |
| 5 | 1.93 | 85 | 2.48 | 16 | 1.61 | 99 | 2.02 |
| 6 | 1.32 | 85 | 1.17 | 17 | 1.61 | 99 | 2.02 |
| 7 | 1.32 | 85 | 1.17 | 18 | 1.32 | 118 | 1.62 |
| 8 | 1.32 | 85 | 1.17 | 19 | 1.32 | 95 | 1.30 |
| 9 | 1.32 | 85 | 1.17 | 20 | 1.32 | 106 | 1.45 |
| 10 | 1.32 | 85 | 1.17 | 21 | 1.79 | 85 | 2.11 |
| 11 | 1.32 | 85 | 1.17 | 22 | 1.32 | 110 | 1.50 |

| | | AREA $m^2 \times 10^{-4}$ |
|---|---|---|
| PILOT BURNER SWIRLER | 7 LEFT HAND SWIRLERS | 23.49 $A_{CD}$ (EFFECTIVE AREA) |
| PILOT BURNER SWIRLER COOLING | 224 @ 0.140 X $10^{-2}$m DIA | 3.43 |
| MAIN BURNER SWIRLER 28 ALTERNATING SWIRL DIRECTION – P/N L-104377 | | 119.23 $A_{CD}$ (EFFECTIVE AREA) |
| BULKHEAD COOLING 20 @ 0.282 X $10^{-2}$m DIA | 568 @ 0.102 X $10^{-2}$m DIA | 5.79 |
| MAIN BURNER NOZZLE COOLING AIR | 52 @ 0.254 X $10^{-2}$m DIA | 2.63 |
| FINWALL® (INNER WALL) | 1.06% $W_{AB}$ (BURNER AIRFLOW) | |
| FINWALL® (OUTER WALL) | 1.14% $W_{AB}$ (BURNER AIRFLOW) | |
| FINWALL® (CYLINDERS) | 2.26% $W_{AB}$ (BURNER AIRFLOW) | |
| SIDEWALL COOLING | 5.00% $W_{A4}$ (TOTAL AIRFLOW – STATION 4) | |
| TURBINE COOLING (INNER WALL) | 7.5% $W_{A4}$ (TOTAL AIRFLOW – STATION 4) | |
| TURBINE COOLING (OUTER WALL) | 8.4% $W_{A4}$ (TOTAL AIRFLOW – STATION 4) | |
| PILOT BURNER NOZZLE P/N | DLN 27700-13 7 LOCATIONS | |
| MAIN BURNER NOZZLE P/N | DLN 27700-13 7 LOCATIONS | |

MODIFICATIONS REFERENCE S13

7 SECONDARY FUEL INJECTORS

$W_f/\sqrt{\Delta P} = 0.9946\ \mathrm{g\ m^2/Ns}$

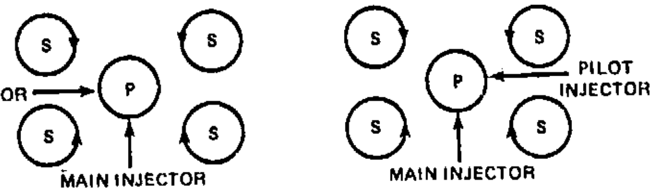

*Figure A-11 Vorbix Combustor Configuration S14*

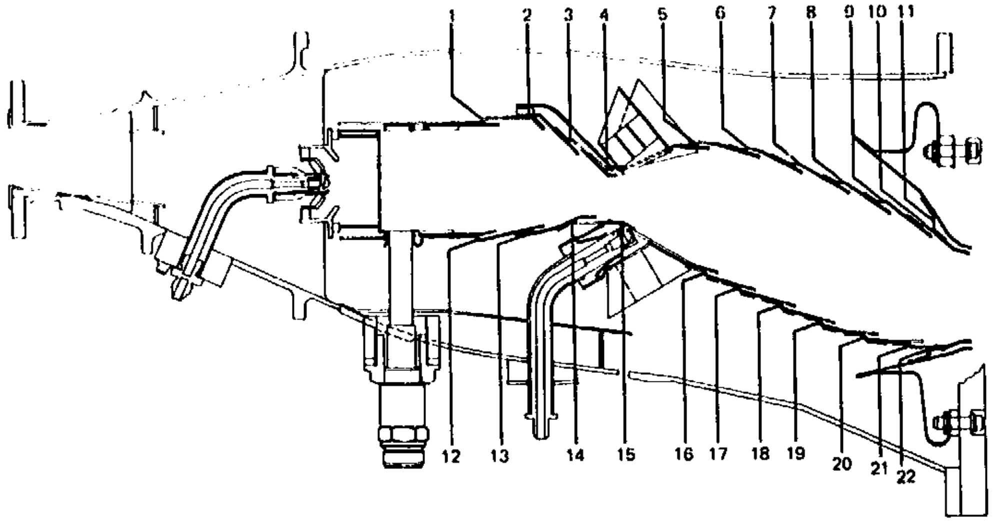

COOLING HOLE PATTERN

| INNER LINER | | | | OUTER LINER | | | |
|---|---|---|---|---|---|---|---|
| LOUVER | DIA. $m \times 10^{-3}$ | # HOLES | AREA $m^2 \times 10^{-4}$ | LOUVER | DIA. $m \times 10^{-3}$ | # HOLES | AREA $m^2 \times 10^{-4}$ |
| 1 | 1.79 | 85 | 2.11 | 12 | 1.79 | 110 | 2.73 |
| 2 | 1.79 | 85 | 2.11 | 13 | 1.79 | 110 | 2.73 |
| 3 | 1.79 | 110 | 2.73 | 14 | 1.79 | 130 | 3.23 |
| 4 | 2.08 | 110 | 3.75 | 15 | 2.08 | 130 | 4.43 |
| 5 | 1.93 | 85 | 2.48 | 16 | 1.61 | 99 | 2.02 |
| 6 | 1.32 | 85 | 1.17 | 17 | 1.61 | 99 | 2.02 |
| 7 | 1.32 | 85 | 1.17 | 18 | 1.32 | 118 | 1.62 |
| 8 | 1.32 | 85 | 1.17 | 19 | 1.32 | 95 | 1.30 |
| 9 | 1.32 | 85 | 1.17 | 20 | 1.32 | 106 | 1.45 |
| 10 | 1.32 | 85 | 1.17 | 21 | 1.79 | 85 | 2.11 |
| 11 | 1.32 | 85 | 1.17 | 22 | 1.32 | 110 | 1.50 |

| | | AREA $m^2 \times 10^{-4}$ |
|---|---|---|
| PILOT BURNER SWIRLER | 7 LEFT HAND SWIRLERS | 224 @ $0.140 \times 10^{-2}$m DIAMETER |
| PILOT BURNER SWIRLER COOLING | 224 @ $0.140 \times 10^{-2}$ m | 558 @ $0.102 \times 10^{-2}$m DIAMETER |
| MAIN BURNER SWIRLER 28 ALTERNATING SWIPL DIRECTION – P/N L-104377 | | 52 @ $0.254 \times 10^{-2}$m DIAMETER |
| BULKHEAD COOLING 20 @ $0.282 \times 10^{-2}$ m | 558 @ $0.102 \times 10^{-2}$ m | 23.49 $A_{CD}$ (EFFECTIVE AREA) |
| MAIN BURNER NOZZLE COOLING AIR | 52 @ DIAMETER $0.254 \times 10^{-2}$m | 3.43 |
| FINWALL® (INNER WALL) | 1.06% $W_{AB}$ (BURNER AIRFLOW) | 119.23 $A_{CD}$ (EFFECTIVE AREA) |
| FINWALL® (OUTER WALL) | 1.14% $W_{AB}$ (BURNER AIRFLOW) | 5.77 |
| FINWALL® (CYLINDERS) | 2.26% $W_{AB}$ (BURNER AIRFLOW) | 2.63 |
| SIDEWALL COOLING | 5.00% $W_{A4}$ (TOTAL AIRFLOW STATION 4) | |
| TURBINE COOLING (INNER WALL) | 7.5% $W_{A4}$ (TOTAL AIRFLOW – STATION 4) | |
| TURBINE COOLING (OUTER WALL) | 8.4% $W_{A4}$ (TOTAL AIRFLOW – STATION 4) | |
| PILOT BURNER NOZZLE P/N | DLN 27700-13 7 LOCATIONS | |
| MAIN BURNER NOZZLE P/N | DLN 27700-13 13 LOCATIONS | |

**MODIFICATIONS REFERENCE S14**

RUN 13 SECONDARY FUEL INJECTORS

*Figure A-12 Vorbix Combustor Configuration S15*

ORIGINAL PAGE IS
OF POOR QUALITY

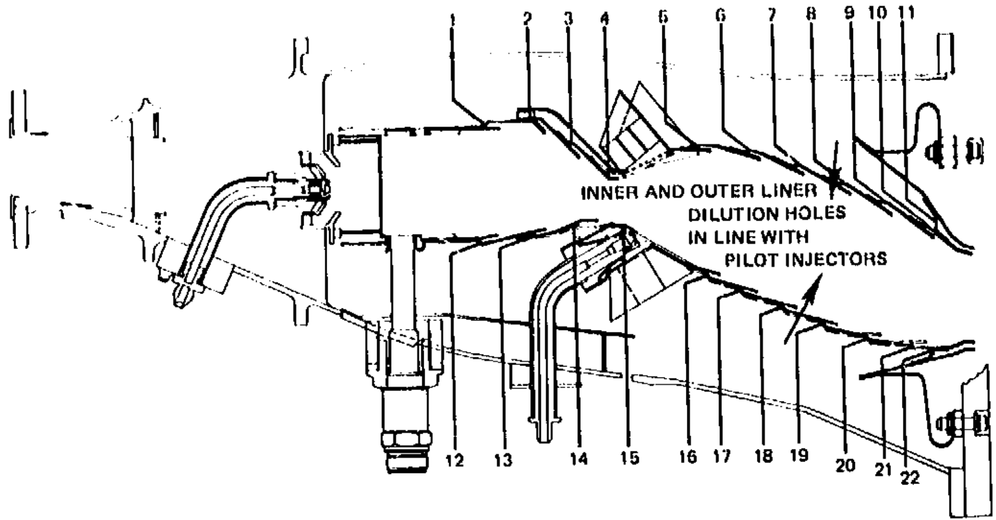
1
2
3
4
5
6
7
8
9
10
11
INNER AND OUTER LINER DILUTION HOLES IN LINE WITH PILOT INJECTORS
12
13
14
15
16
17
18
19
20
21
22

COOLING HOLE PATTERN

| INNER LINER | | | | OUTER LINER | | | |
|---|---|---|---|---|---|---|---|
| LOUVER | DIA. m X $10^{-3}$ | # HOLES | AREA $m^2 X 10^{-4}$ | LOUVER | DIA. m X $10^{-3}$ | # HOLES | AREA $m^2 X 10^{-4}$ |
| 1 | 1.79 | 85 | 2.11 | 12 | 1.79 | 110 | 2.73 |
| 2 | 1.79 | 85 | 2.11 | 13 | 1.79 | 110 | 2.73 |
| 3 | 1.79 | 110 | 2.73 | 14 | 1.79 | 130 | 3.23 |
| 4 | 2.08 | 110 | 3.75 | 15 | 2.08 | 130 | 4.43 |
| 5 | 1.93 | 85 | 2.48 | 16 | 1.61 | 99 | 2.02 |
| 6 | 1.32 | 85 | 1.17 | 17 | 1.61 | 99 | 2.02 |
| 7 | 1.32 | 85 | 1.17 | 18 | 1.32 | 118 | 1.62 |
| 8 | 1.32 | 85 | 1.17 | 19 | 1.32 | 95 | 1.30 |
| 9 | 1.32 | 85 | 1.17 | 20 | 1.32 | 106 | 1.45 |
| 10 | 1.32 | 85 | 1.17 | 21 | 1.79 | 85 | 2.11 |
| 11 | 1.32 | 85 | 1.17 | 22 | 1.32 | 110 | 1.50 |

| | | AREA $m^2$ X $10^{-4}$ |
|---|---|---|
| PILOT BURNER SWIRLER | 7 LEFT HAND SWIRLERS | 3.29 $A_{CD}$ (EFFECTIVE AREA) |
| PILOT BURNER SWIRLER COOLING | 224 @ 0.140 X $10^{-2}$m DIAM | 119.23 $A_{CD}$ (EFFECTIVE AREA) |
| MAIN BURNER SWIRLER 28 ALTERNATING SWIRL DIRECTION – P/N L-104377 | | 5.77 |
| BULKHEAD COOLING 20 @ 0.282 X $10^{-2}$m DIAM | 558 @ 0.102 X $10^{-2}$m DIAM | 2.63 |
| MAIN BURNER NOZZLE COOLING AIR | 52 @ 0.100 DIAMETER | 0.408 |
| FINWALL®(INNER WALL) | 1.06% $W_{AB}$ (BURNER AIRFLOW) | |
| FINWALL®(OUTER WALL) | 1.14% $W_{AB}$ (BURNER AIRFLOW) | |
| FINWALL®(CYLINDERS) | 2.26% $W_{AB}$ (BURNER AIRFLOW) | |
| SIDEWALL COOLING | 5.00% $W_{A4}$ (TOTAL AIRFLOW – STATION 4) | |
| TURBINE COOLING (INNER WALL) | 7.5% $W_{A4}$ (TOTAL AIRFLOW – STATION 4) | |
| TURBINE COOLING (OUTER WALL) | 8.4% $W_{A4}$ (TOTAL AIRFLOW – STATION 4) | |
| PRIMARY NOZZLE P/N | DLN 27700-13, 7 LOCATIONS | |
| MAIN BURNER NOZZLE P/N | DLN 27700-11, 13 LOCATIONS | |
| MAIN BURNER DILUTION (INNER WALL) | 7 @ 1.664 X $10^{-2}$m DIAMETER | |
| MAIN BURNER DILUTION (OUTER WALL) | 7 @ 1.664 X $10^{-2}$m DIAMETER | |

**MODIFICATIONS REFERENCE S15**

INSTALL ALL RIGHT HAND MAIN BURNER SWIRLERS
REDUCE PILOT BURNER SWIRLER AIRFLOW WITH BLOCKAGE RING
ADD INNER AND OUTER LINER DILUTION AIR (ROWS 7 AND 18)

*Figure A-13 Vorbix Combustor Configuration S16*

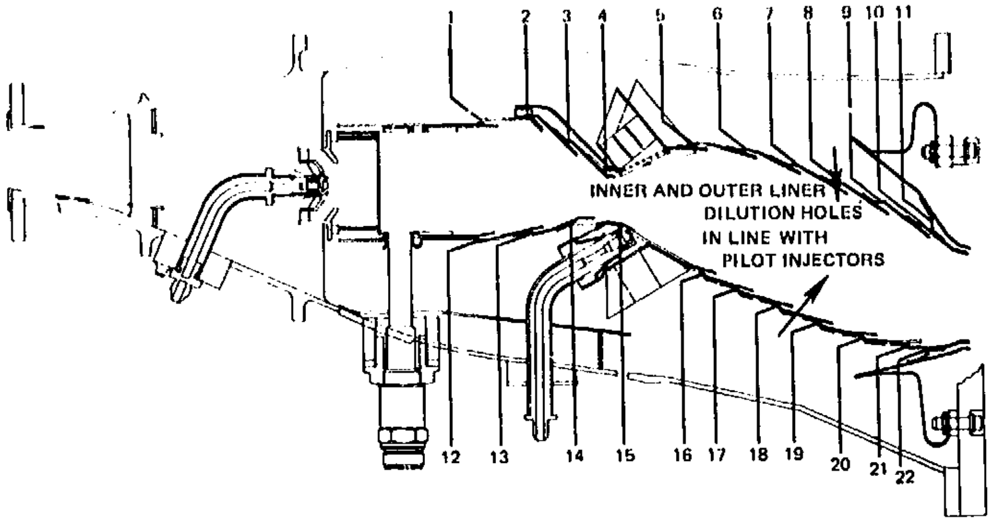
1
2
3
4
5
6
7
8
9
10
11
INNER AND OUTER LINER DILUTION HOLES IN LINE WITH PILOT INJECTORS
12
13
14
15
16
17
18
19
20
21
22

COOLING HOLE PATTERN

| INNER LINER | | | | OUTER LINER | | | |
|---|---|---|---|---|---|---|---|
| LOUVER | DIA. $m \times 10^{-3}$ | # HOLES | AREA $m^2 \times 10^{-4}$ | LOUVER | DIA. $m \times 10^{-3}$ | # HOLES | AREA $m^2 \times 10^{-4}$ |
| 1 | 1.79 | 85 | 2.11 | 12 | 1.79 | 110 | 2.73 |
| 2 | 1.79 | 85 | 2.11 | 13 | 1.79 | 110 | 2.73 |
| 3 | 1.79 | 110 | 2.73 | 14 | 1.79 | 130 | 3.23 |
| 4 | 2.08 | 110 | 3.75 | 15 | 2.08 | 130 | 4.43 |
| 5 | 1.93 | 85 | 2.48 | 16 | 1.61 | 99 | 2.02 |
| 6 | 1.32 | 85 | 1.17 | 17 | 1.61 | 99 | 2.02 |
| 7 | 1.32 | 85 | 1.17 | 18 | 1.32 | 118 | 1.62 |
| 8 | 1.32 | 85 | 1.17 | 19 | 1.32 | 95 | 1.30 |
| 9 | 1.32 | 85 | 1.17 | 20 | 1.32 | 106 | 1.45 |
| 10 | 1.32 | 85 | 1.17 | 21 | 1.79 | 85 | 2.11 |
| 11 | 1.32 | 85 | 1.17 | 22 | 1.32 | 110 | 1.50 |

| | | AREA $m^2 \times 10^{-4}$ |
|---|---|---|
| PILOT BURNER SWIRLER | 7 LEFT HAND SWIRLERS | 3.29 $A_{CD}$ (EFFECTIVE AREA) |
| PILOT BURNER SWIRLER COOLING | 224 @ 0.140 X $10^{-2}$m DIAM | 3.43 |
| MAIN BURNER SWIRLER 28 ALTERNATING SWIRL DIRECTION - P/N L-104377 | | 119.23 $A_{CD}$ (EFFECTIVE AREA) |
| BULKHEAD COOLING 20 @ 0.282 X $10^{-2}$m DIAM | 568 @ 0.102 X $10^{-2}$m DIAM | 5.79 |
| MAIN BURNER NOZZLE COOLING AIR | 52 @ 0.254 X $10^{-2}$m DIAM | 2.63 |
| FINWALL® (INNER WALL) | 1.06% $W_{AB}$ (BURNER AIRFLOW) | |
| FINWALL® (OUTER WALL) | 1.14% $W_{AB}$ (BURNER AIRFLOW) | |
| FINWALL® (CYLINDERS) | 2.26% $W_{AB}$ (BURNER AIRFLOW) | |
| SIDEWALL COOLING | 5.00% $W_{A4}$ (TOTAL AIRFLOW - STATION 4) | |
| TURBINE COOLING (INNER WALL) | 7.5% $W_{A4}$ (TOTAL AIRFLOW – STATION 4) | |
| TURBINE COOLING (OUTER WALL) | 8.4% $W_{A4}$ (TOTAL AIRFLOW STATION 4) | |
| PILOT BURNER NOZZLE P/N | EX 10970 7 LOCATIONS | |
| MAIN BURNER NOZZLE P/N | DLN 27700-11 13 LOCATIONS | |
| MAIN BURNER DILUTION (INNER WALL) | 7 @ 1.664 X $10^{-2}$m DIAMETER | 15.22 |
| MAIN BURNER DILUTION (OUTER WALL) | 7 @ 1.664 X $10^{-2}$m DIAMETER | 15.22 |

MODIFICATIONS REFERENCE S16

INSTALL LOW ΔP AERATING PILOT FUEL INJECTORS

*Figure A-14 Vorbix Combustor Configuration S17*

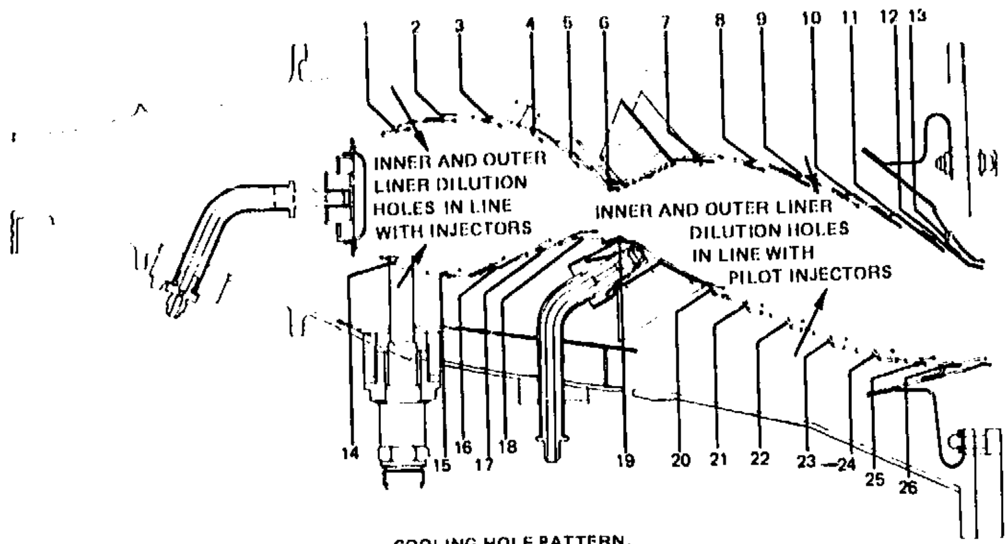
1
2
3
4
5
6
7
8
9
10
11
12
13
INNER AND OUTER LINER DILUTION HOLES IN LINE WITH INJECTORS
INNER AND OUTER LINER DILUTION HOLES IN LINE WITH PILOT INJECTORS
14
15
16
17
18
19
20
21
22
23
24
25
26

COOLING HOLE PATTERN

| INNER LINER | | | | OUTER LINER | | | |
|---|---|---|---|---|---|---|---|
| LOUVER | DIA. $m \times 10^{-3}$ | #HOLES | AREA $m^2 \times 10^{-4}$ | LOUVER | DIA. $m \times 10^{-3}$ | #HOLES | AREA $m^2 \times 10^{-4}$ |
| 1 | 1.63 | 84 | 1.74 | 14 | 2.34 | 84— | 3.61 |
| 2 | 1.63 | 84 | 1.74 | 15 | 1.63 | 84 | 1.74 |
| 3 | 1.63 | 84 | 1.74 | 16 | 1.63 | 84 | 1.74 |
| 4 | 1.63 | 84 | 1.74 | 17 | 1.63 | 84 | 1.74 |
| 5 | 1.96 | 84 | 2.52 | 18 | 1.80 | 84 | 2.15 |
| 6 | 2.27 | 84 | 3.45 | 19 | 2.08 | 130 | 4.43 |
| 7 | 1.93 | 85 | 2.49 | 20 | 1.63 | 99 | 2.05 |
| 8 | 1.32 | 85 | 1.17 | 21 | 1.63 | 99 | 2.05 |
| 9 | 1.32 | 85 | 1.17 | 22 | 1.32 | 118 | 1.62 |
| 10 | 1.32 | 85 | 1.17 | 23 | 1.32 | 95 | 1.30 |
| 11 | 1.32 | 85 | 1.17 | 24 | 1.32 | 106 | 1.45 |
| 12 | 1.32 | 85 | 1.17 | 25 | 1.79 | 85 | 2.11 |
| 13 | 1.32 | 85 | 1.17 | 26 | 1.32 | 110 | 1.51 |

| | | AREA $m^2 \times 10^{-4}$ |
|---|---|---|
| PILOT BURNER SWIRLER | 7 LEFT HAND SWIRLERS | 10.84 $A_{CD}$ (EFFECTIVE AREA) |
| BULKHEAD COOLING | 147 @ $0.226 \times 10^{-2}$m DIAMETER | 5.90 |
| MAIN BURNER NOZZLE COOLING | 52 @ $0.254 \times 10^{-2}$m DIAMETER | 2.63 |
| PILOT BURNER DILUTION (INNER WALL) | 7 @ $1.631 \times 10^{-2}$m DIAMETER | 14.62 |
| PILOT BURNER DILUTION (OUTER WALL) | 7 @ $1.631 \times 10^{-2}$m DIAMETER | 14.62 |
| MAIN BURNER SWIRLERS | 28 RIGHT HAND SWIRLERS | 119.23 $A_{CD}$ (EFFECTIVE AREA) |
| SIDEWALL COOLING | 5% $WA_4$ (TOTAL AIRFLOW – STATION 4) | |
| TURBINE COOLING (INNER WALL) | 7.5% $W_{A4}$ (TOTAL AIRFLOW – STATION 4) | |
| TURBINE COOLING (OUTER WALL) | 8.4% $W_{A4}$ (TOTAL AIRFLOW - STATION 4) | |
| PILOT BURNER NOZZLE | EX 10970 7 LOCATIONS | 3.61 $A_{CD}$ (EFFECTIVE AREA) |
| MAIN BURNER NOZZLE | DLN 27700 – 11 13 LOCATIONS | |
| MAIN BURNER DILUTION (INNER WALL) | 7 @ $1.664 \times 10^{-2}$m DIAMETER | 15.22 |
| MAIN BURNER DILUTION (OUTER WALL) | 7 @ $1.664 \times 10^{-2}$m DIAMETER | 15.22 |

MODIFICATIONS REFERENCE S 17

INCREASE PILOT VOLUME
ADD PILOT DILUTION AIR
MODIFY PILOT SWIRLER
MODIFY PILOT COOLING

*Figure A-15 Vorbix Combustor Configuration S18*

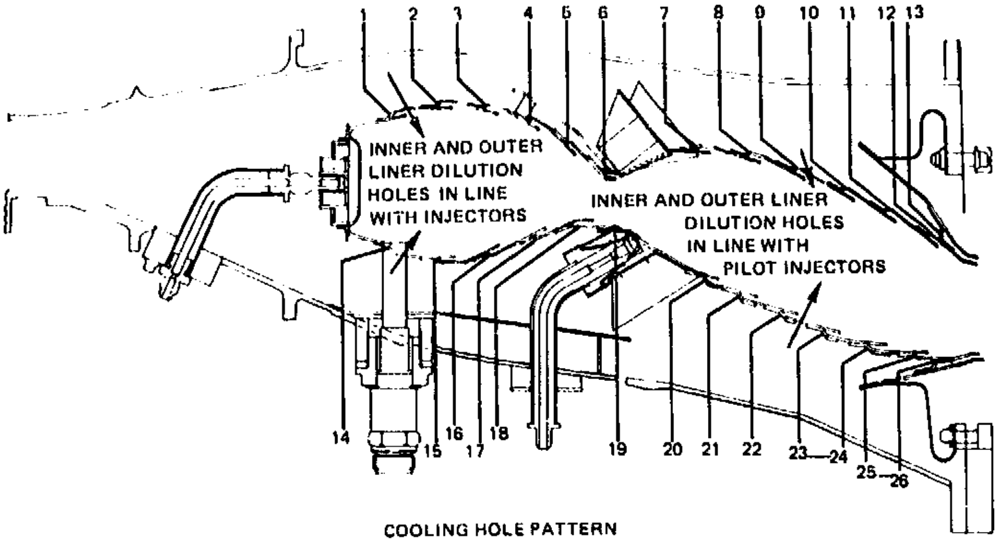
1
2
3
4
5
6
7
8
9
10
11
12
13
INNER AND OUTER LINER DILUTION HOLES IN LINE WITH INJECTORS
INNER AND OUTER LINER DILUTION HOLES IN LINE WITH PILOT INJECTORS
14
15
16
17
18
19
20
21
22
23—24
25—26

COOLING HOLE PATTERN

| INNER LINER | | | | OUTER LINER | | | |
|---|---|---|---|---|---|---|---|
| LOUVER | DIA. $m \times 10^{-3}$ | #HOLES | AREA $m^2 \times 10^{-4}$ | LOUVER | DIA. $m \times 10^{-3}$ | #HOLES | AREA $m^2 \times 10^{-4}$ |
| 1 | 1.63 | 84 | 1.74 | 14 | 2.34 | 84 | 3.61 |
| 2 | 1.63 | 84 | 1.74 | 15 | 1.63 | 84 | 1.74 |
| 3 | 1.63 | 84 | 1.74 | 16 | 1.63 | 84 | 1.74 |
| 4 | 1.63 | 84 | 1.74 | 17 | 1.63 | 84 | 1.74 |
| 5 | 1.96 | 84 | 2.52 | 18 | 1.80 | 84 | 2.15 |
| 6 | 2.27 | 84 | 3.45 | 19 | 2.08 | 130 | 4.43 |
| 7 | 1.93 | 85 | 2.49 | 20 | 1.63 | 99 | 2.05 |
| 8 | 1.32 | 85 | 1.17 | 21 | 1.63 | 99 | 2.05 |
| 9 | 1.32 | 85 | 1.17 | 22 | 1.32 | 118 | 1.62 |
| 10 | 1.32 | 85 | 1.17 | 23 | 1.32 | 95 | 1.30 |
| 11 | 1.32 | 85 | 1.17 | 24 | 1.32 | 106 | 1.45 |
| 12 | 1.32 | 85 | 1.17 | 25 | 1.79 | 85 | 2.11 |
| 13 | 1.32 | 85 | 1.17 | 26 | 1.32 | 110 | 1.51 |

| | | AREA $m^2 \times 10^{-4}$ |
|---|---|---|
| PILOT BURNER SWIRLER | 7 LEFT HAND SWIRLERS | 10.84 $A_{CD}$ (EFFECTIVE AREA) |
| BULKHEAD COOLING | 147 @ 0.228 X $10^2$m DIAMETER | 6.90 |
| MAIN BURNER NOZZLE COOLING | 52 @ 0.254 X $10^{-2}$m DIAMETER | 2.63 |
| PILOT BURNER DILUTION (INNER WALL) | 7 @ 1.631 X $10^{-2}$m DIAMETER | 14.62 |
| PILOT BURNER DILUTION (OUTER WALL) | 7 @ 1.631 X $10^{-2}$m DIAMETER | 14.62 |
| MAIN BURNER SWIRLERS | 28 RIGHT HAND SWIRLERS | 119.23 $A_{CD}$ (EFFECTIVE AREA) |
| SIDEWALL COOLING | 5% $WA_4$ (TOTAL AIRFLOW – STATION 4) | |
| TURBINE COOLING (INNER WALL) | 7.5% $W_{A4}$ (TOTAL AIRFLOW – STATION 4) | |
| TURBINE COOLING (OUTER WALL) | 8.4% $W_{A4}$ (TOTAL AIRFLOW – STATION 4) | |
| PILOT BURNER NOZZLE | DLN 27700-11, 7 LOCATIONS | |
| MAIN BURNER NOZZLE | DLN 27700-11, 13 LOCATIONS | |
| MAIN BURNER DILUTION (INNER WALL) | 7 @ 1.664 X $10^{-2}$ DIAMETER | 15.22 |
| MAIN BURNER DILUTION (OUTER WALL) | 7 @ 1.664 X $10^{-2}$ DIAMETER | 15.22 |

MODIFICATIONS REFERENCE S18

USED PRESSURE ATOMIZING PILOT BURNER NOZZLE

*Figure A-16 Vorbix Combustor Configuration S19*

ORIGINAL PAGE IS
OF POOR QUALITY

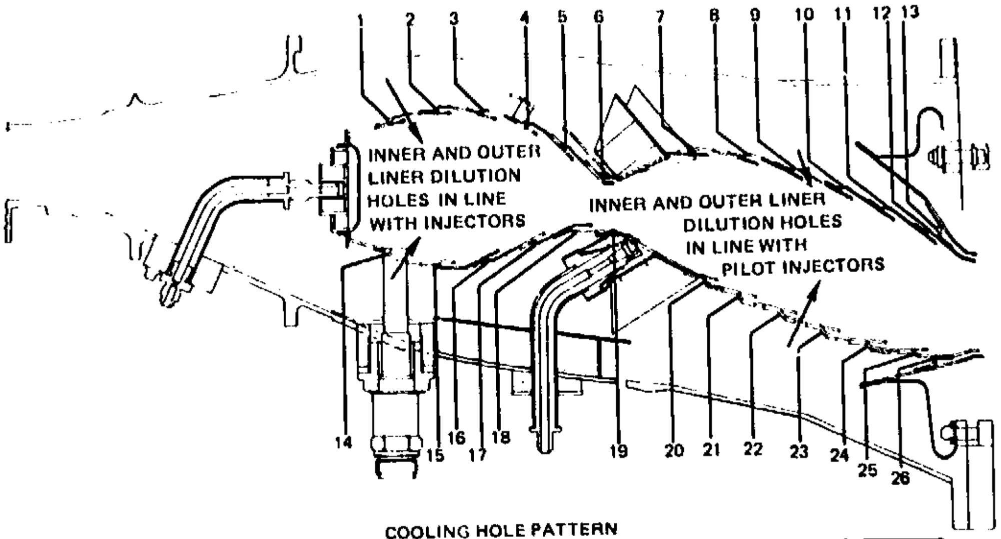
1
2
3
4
5
6
7
8
9
10
11
12
13
INNER AND OUTER LINER DILUTION HOLES IN LINE WITH INJECTORS
INNER AND OUTER LINER DILUTION HOLES IN LINE WITH PILOT INJECTORS
14
15
16
17
18
19
20
21
22
23
24
25
26

COOLING HOLE PATTERN

| INNER LINER | | | | OUTER LINER | | | |
|---|---|---|---|---|---|---|---|
| LOUVER | DIA. $m \times 10^{-3}$ | #HOLES | AREA $m^2 \times 10^{-4}$ | LOUVER | DIA. $m \times 10^{-3}$ | #HOLES | AREA $m^2 \times 10^{-4}$ |
| 1 | 1.63 | 84 | 1.74 | 14 | 2.34 | 84 | 3.61 |
| 2 | 1.63 | 84 | 1.74 | 15 | 1.63 | 84 | 1.74 |
| 3 | 1.63 | 84 | 1.74 | 16 | 1.63 | 84 | 1.74 |
| 4 | 1.63 | 84 | 1.74 | 17 | 1.63 | 84 | 1.74 |
| 5 | 1.96 | 84 | 2.52 | 18 | 1.80 | 84 | 2.15 |
| 6 | 2.27 | 84 | 3.45 | 19 | 2.08 | 130 | 4.43 |
| 7 | 1.93 | 85 | 2.49 | 20 | 1.63 | 99 | 2.05 |
| 8 | 1.32 | 85 | 1.17 | 21 | 1.63 | 99 | 2.05 |
| 9 | 1.32 | 85 | 1.17 | 22 | 1.32 | 118 | 1.62 |
| 10 | 1.32 | 85 | 1.17 | 23 | 1.32 | 95 | 1.30 |
| 11 | 1.32 | 85 | 1.17 | 24 | 1.32 | 106 | 1.45 |
| 12 | 1.32 | 85 | 1.17 | 25 | 1.79 | 86 | 2.11 |
| 13 | 1.32 | 85 | 1.17 | 26 | 1.32 | 110 | 1.51 |

| | | AREA $m^2 \times 10^{-4}$ |
|---|---|---|
| PILOT BURNER SWIRLER | 7 LEFT HAND SWIRLERS | 24.39 $A_{CD}$ (EFFECTIVE AREA) |
| BULKHEAD COOLING | 147 @ $0.226 \times 10^{-2}$ m DIAMETER | 5.90 |
| MAIN BURNER NOZZLE COOLING | 52 @ $0.254 \times 10^{-2}$ m DIAMETER | 2.63 |
| PILOT BURNER DILUTION (INNER WALL) | 7 @ $1.631 \times 10^{-2}$ m DIAMETER | 14.62 |
| PILOT BURNER DILUTION (OUTER WALL) | 7 @ $1.631 \times 10^{-2}$ m DIAMETER | 14.62 |
| MAIN BURNER SWIRLERS | 28 RIGHT HAND SWIRLERS | 101.16 $A_{CD}$ (EFFECTIVE AREA) |
| SIDEWALL COOLING | 5% $WA_4$ (TOTAL AIRFLOW – STATION 4) | |
| TURBINE COOLING (INNER WALL) | 7.5% $W_{A4}$ (TOTAL AIRFLOW – STATION 4) | |
| TURBINE COOLING (OUTER WALL) | 8.4% $W_{A4}$ (TOTAL AIRFLOW – STATION 4) | |
| PILOT BURNER NOZZLE | DLN 27700-11, 7 LOCATIONS | |
| MAIN BURNER NOZZLE | DLN 27700-11, 13 LOCATIONS | |
| MAIN BURNER DILUTION (INNER WALL) | 7 @ $1.664 \times 10^{-2}$ m DIAMETER | 15.22 |
| MAIN BURNER DILUTION (OUTER WALL) | 7 @ $1.664 \times 10^{-2}$ m DIAMETER | 15.22 |

MODIFICATIONS REFERENCE S 19

INCREASE PILOT BURNER SWIRLER AIR FLOW
DECREASE MAIN BURNER SWIRLER AIR FLOW

*Figure A-17 Vorbix Combustor Configuration S20*

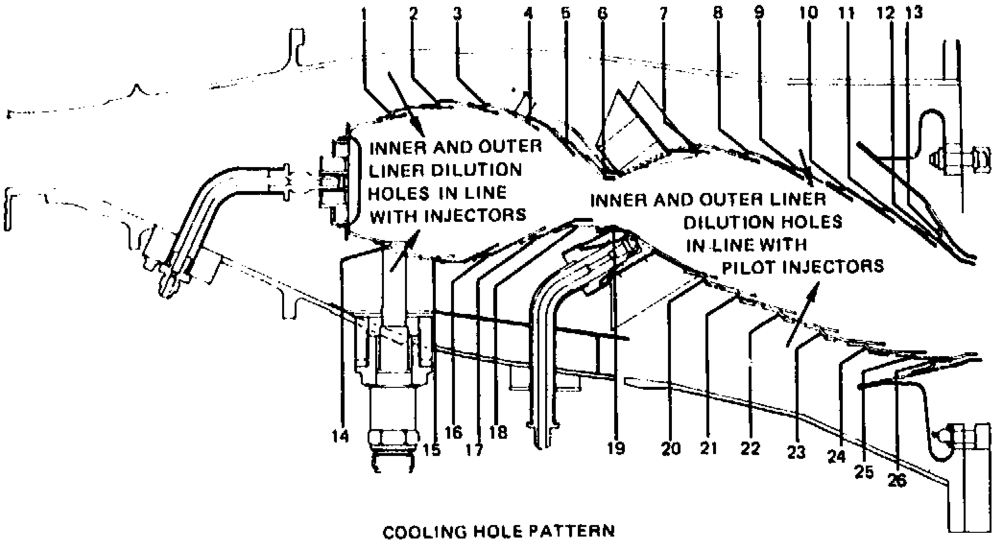
1
2
3
4
5
6
7
8
9
10
11
12
13
INNER AND OUTER LINER DILUTION HOLES IN LINE WITH INJECTORS
INNER AND OUTER LINER DILUTION HOLES IN LINE WITH PILOT INJECTORS
14
15
16
17
18
19
20
21
22
23
24
25
26

COOLING HOLE PATTERN

| INNER LINER | | | | OUTER LINER | | | |
|---|---|---|---|---|---|---|---|
| LOUVER | DIA. $m \times 10^{-3}$ | #HOLES | AREA $m^2 \times 10^{-4}$ | LOUVER | DIA. $m \times 10^{-3}$ | #HOLES | AREA $m^2 \times 10^{-4}$ |
| 1 | 1.63 | 84 | 1.74 | 14 | 2.34 | 84 | 3.61 |
| 2 | 1.63 | 84 | 1.74 | 15 | 1.63 | 84 | 1.74 |
| 3 | 1.63 | 84 | 1.74 | 16 | 1.63 | 84 | 1.74 |
| 4 | 1.63 | 84 | 1.74 | 17 | 1.63 | 84 | 1.74 |
| 5 | 1.96 | 84 | 2.52 | 18 | 1.80 | 84 | 2.15 |
| 6 | 2.27 | 84 | 3.45 | 19 | 2.08 | 130 | 4.43 |
| 7 | 1.93 | 85 | 2.49 | 20 | 1.63 | 99 | 2.05 |
| 8 | 1.32 | 85 | 1.17 | 21 | 1.63 | 99 | 2.05 |
| 9 | 1.32 | 85 | 1.17 | 22 | 1.32 | 118 | 1.62 |
| 10 | 1.32 | 85 | 1.17 | 23 | 1.32 | 95 | 1.30 |
| 11 | 1.32 | 85 | 1.17 | 24 | 1.32 | 106 | 1.45 |
| 12 | 1.32 | 85 | 1.17 | 25 | 1.79 | 85 | 2.11 |
| 13 | 1.32 | 85 | 1.17 | 26 | 1.32 | 110 | 1.51 |

| | | AREA $m^2 \times 10^{-4}$ |
|---|---|---|
| PILOT BURNER SWIRLER | 7 DUAL CO-ROTATING L H SWIRLERS | 29.81 $A_{CD}$ (EFFECTIVE AREA) |
| BULKHEAD COOLING | 147 @ $0.226 \times 10^{-2}$m DIAMETER | 5.90 |
| MAIN BURNER NOZZLE COOLING | 52 @ $0.254 \times 10^{-2}$m DIAMETER | 2.63 |
| PILOT BURNER DILUTION (INNER WALL) | 7 @ $1.631 \times 10^{-2}$m DIAMETER | 14.62 |
| PILOT BURNER DILUTION (OUTER WALL) | 7 @ $1.63 \times 10^{-2}$m DIAMETER | 14.62 |
| MAIN BURNER SWIRLERS | 28 RIGHT HAND SWIRLERS | 94.21 $A_{CD}$ (EFFECTIVE AREA) |
| SIDEWALL COOLING | 5% $WA_4$ (TOTAL AIRFLOW – STATION 4) | 11.52 $A_{CD}$ (EFFECTIVE AREA) |
| TURBINE COOLING (INNER WALL) | 7.5% $W_{A4}$ (TOTAL AIRFLOW – STATION 4 | 16.91 $A_{CD}$ (EFFECTIVE AREA) |
| TURBINE COOLING (OUTER WALL) | 8.4% $W_{A4}$ (TOTAL AIRFLOW – STATION 4 | 15.04 $A_{CD}$ (EFFECTIVE AREA) |
| PILOT BURNER NOZZLE | DLN 27700-11, 7 LOCATIONS | |
| MAIN BURNER NOZZLE | DLN 27700-11, 13 LOCATIONS | |
| MAIN BURNER DILUTION (INNER WALL) | 7 @ $1.664 \times 10^{-2}$m DIAMETER | 2.359 |
| MAIN BURNER DILUTION (OUTER WALL) | 7 @ $1.664 \times 10^{-2}$m DIAMETER | 2.359 |

MODIFICATIONS REF MODIFICATIONS REF. S 20

INCREASE PILOT BURNER SWIRLER AIR FLOW THROUGH THE USE OF LARGER SWIRLER
INCREASE BLOCKAGE RINGS (TO $0.348 \times 10^{-2}$m INCH WIDTH) ON OUTER LINER MAIN BURNER SWIRLERS
ADDED CARBURETOR TUBES TO MAIN BURNER FUEL SYSTEM
ADDED TOROIDAL DEFLECTOR TO PILOT BURNER SWIRLER

*Figure A-18 Vorbix Combustor Configuration S21*

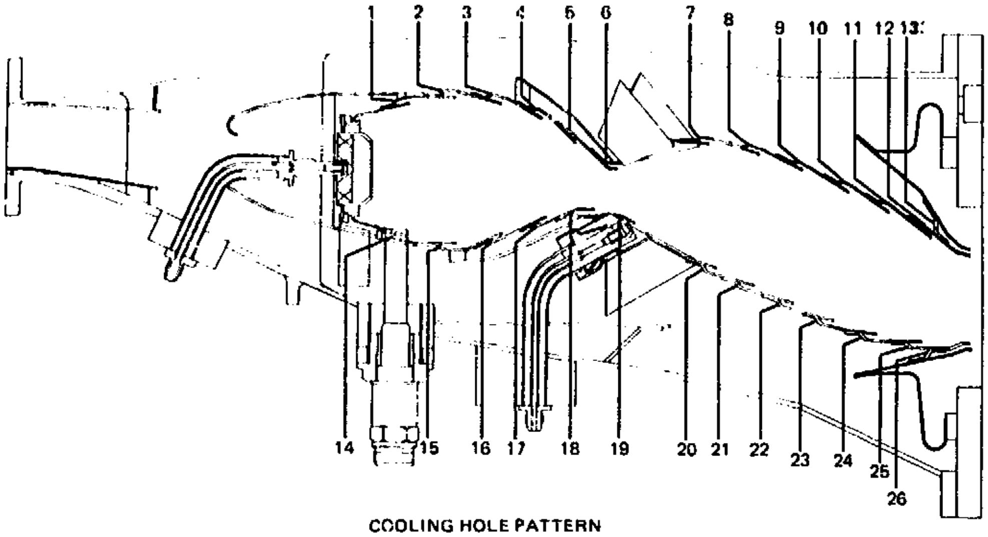

COOLING HOLE PATTERN

| INNER LINER | | | | OUTER LINER | | | |
|---|---|---|---|---|---|---|---|
| LOUVER | DIA. $m X 10^{-3}$ | #HOLES | AREA $m^2 X 10^{-4}$ | LOUVER | DIA. $m X 10^{-3}$ | #HOLES | AREA $m^2 X 10^{-4}$ |
| 1 | 1.63 | 84 | 1.74 | 14 | 2.34 | 84 | 3.61 |
| 2 | 1.63 | 84 | 1.74 | 15 | 1.63 | 84 | 1.74 |
| 3 | 1.63 | 84 | 1.74 | 16 | 1.63 | 84 | 1.74 |
| 4 | 1.63 | 84 | 1.74 | 17 | 1.63 | 84 | 1.74 |
| 5 | 1.96 | 84 | 2.57 | 18 | 1.80 | 84 | 2.15 |
| 6 | 2.27 | 84 | 3.45 | 19 | 2.08 | 130 | 4.43 |
| 7 | 1.93 | 85 | 2.49 | 20 | 1.63 | 99 | 2.05 |
| 8 | 1.32 | 85 | 1.17 | 21 | 1.63 | 99 | 2.05 |
| 9 | 1.32 | 85 | 1.17 | 22 | 1.32 | 118 | 1.62 |
| 10 | 1.32 | 85 | 1.17 | 23 | 1.32 | 95 | 1.30 |
| 11 | 1.32 | 85 | 1.17 | 24 | 1.32 | 106 | 1.45 |
| 12 | 1.32 | 85 | 1.17 | 25 | 1.79 | 85 | 2.11 |
| 13 | 1.32 | 85 | 1.17 | 26 | 1.32 | 110 | 1.51 |

| | | AREA $m^2 X 10^{-4}$ |
|---|---|---|
| PILOT BURNER SWIRLER (INCLUDING SLOTS IN CENTER TUBE OF SWIRLER) | 7 LEFTHAND SWIRLERS | 27.46 $A_{CD}$ (EFFECTIVE AREA) |
| BULKHEAD COOLING | 140 @ 0.234 X $10^{-2}$m DIAMETER | 6.09 |
| MAIN BURNER NOZZLE COOLING | 52 @ 0.254 X $10^{-2}$m DIAMETER | 2.63 |
| PILOT BURNER DILUTION (INNER WALL ROW 1) | 7 @ 1.63 X $10^{-2}$m DIAMETER | 14.62 |
| PILOT BURNER DILUTION (OUTER WALL ROW 14) | 7 @ 1.63 X $10^{-2}$m DIAMETER | 14.62 |
| MAIN BURNER SWIRLERS | 28 RIGHT HAND SWIRLERS | |
| SIDEWALL COOLING | 5% $W_{A4}$ (TOTAL AIRFLOW -- STATION 4) | |
| TURBINE COOLING (INNER WALL) | 7.5% $W_{A4}$ (TOTAL AIRFLOW -- STATION 4) | |
| TURBINE COOLING (OUTER WALL) | 8.4% $W_{A4}$ (TOTAL AIRFLOW – STATION 4) | |
| PILOT BURNER NOZZLE | DLN 27700-13, 7 LOCATIONS | |
| MAIN BURNER NOZZLE | DLN 27700-11, 13 LOCATIONS | |
| MAIN BURNER DILUTION OUTER WALL | | 15.22 |
| MAIN BURNER DILUTION INNER WALL | | 15.22 |

MODIFICATIONS REFERENCE S21

INSTALL HOOD

INSTALL NEW SWIRLER    TORROIDAL DEFLECTOR WITH 3.3 X $10^{-2}$m DIAMETER HOLE.

ADD OUTER LINER SCOOP

REVISE BULKHEAD WITH COOLING AIR ENTERING THROUGH RING CONCENTRIC WITH SWIRLER.

ADD TEMPERATURE-SENSITIVE PAINT ON LINER (INSIDE AND OUT)

REMOVE PREMIXING TUBE FROM MAIN BURNER.

*Figure A-19    Vorbix Combustor Configuration S22*

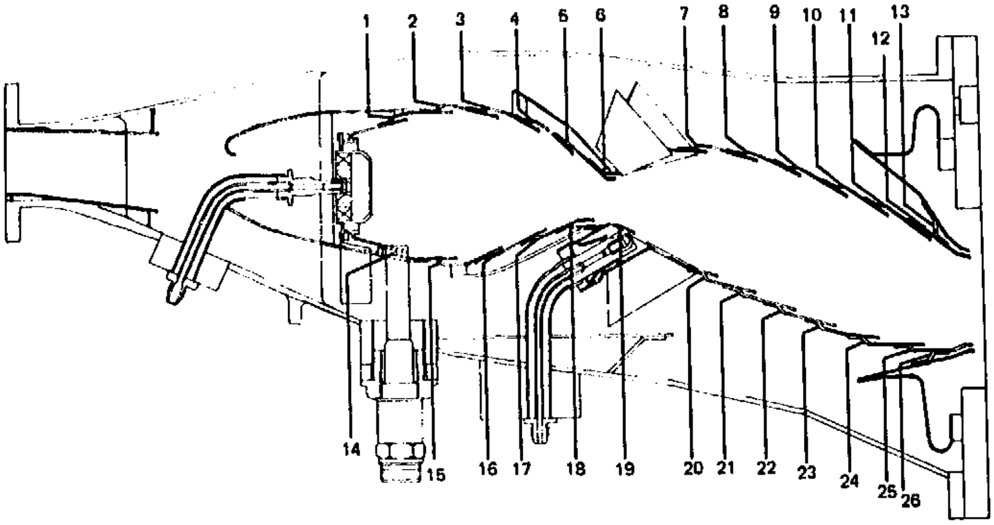

COOLING HOLE PATTERN

| INNER LINER | | | | OUTER LINER | | | |
|---|---|---|---|---|---|---|---|
| LOUVER | DIA. $m \times 10^{-3}$ | #HOLES | AREA $m^2 \times 10^{-4}$ | LOUVER | DIA. $m \times 10^{-3}$ | #HOLES | AREA $m^2 \times 10^{-4}$ |
| 1 | 1.63 | 84 | 1.74 | 14 | 2.34 | 84 | 3.61 |
| 2 | 1.63 | 84 | 1.74 | 15 | 1.63 | 84 | 1.74 |
| 3 | 1.63 | 84 | 1.74 | 16 | 1.63 | 84 | 1.74 |
| 4 | 1.63 | 84 | 1.74 | 17 | 1.63 | 84 | 1.74 |
| 5 | 1.96 | 84 | 2.52 | 18 | 1.80 | 84 | 2.15 |
| 6 | 2.27 | 84 | 3.45 | 19 | 2.08 | 130 | 4.43 |
| 7 | 1.93 | 85 | 2.49 | 20 | 1.63 | 99 | 2.05 |
| 8 | 1.32 | 85 | 1.17 | 21 | 1.63 | 99 | 2.05 |
| 9 | 1.32 | 85 | 1.17 | 22 | 1.32 | 118 | 1.62 |
| 10 | 1.32 | 85 | 1.17 | 23 | 1.32 | 95 | 1.30 |
| 11 | 1.32 | 85 | 1.17 | 24 | 1.32 | 106 | 1.45 |
| 12 | 1.32 | 85 | 1.17 | 25 | 1.79 | 85 | 2.11 |
| 13 | 1.32 | 85 | 1.17 | 26 | 1.32 | 110 | 1.51 |

| | | AREA $m^2 \times 10^{-4}$ |
|---|---|---|
| PILOT BURNER SWIRLER (INCLUDING SLOTS IN CENTER TUBE OF SWIRLER) | 7 LEFTHAND SWIRLERS | 27.46 $A_{CD}$ (EFFECTIVE AREA) |
| BULKHEAD COOLING | 140 @ $0.234 \times 10^{-2}$m DIAMETER | 6.09 |
| MAIN BURNER NOZZLE COOLING | 52 @ $0.254 \times 10^{-2}$m DIAMETER | 2.63 |
| PILOT BURNER DILUTION (INNER WALL ROW 1) | 7 @ $1.63 \times 10^{-2}$m DIAMETER | 14.62 |
| PILOT BURNER DILUTION (OUTER WALL ROW 14) | 7 @ $1.63 \times 10^{-2}$m DIAMETER | 14.62 |
| MAIN BURNER SWIRLERS | 28 RIGHTHAND SWIRLERS | 81.48 $A_{CD}$ (EFFECTIVE AREA) |
| SIDEWALL COOLING | 5% $W_{A4}$ (TOTAL AIRFLOW – STATION 4) | |
| TURBINE COOLING (INNER WALL) | 7.5% $W_{A4}$ (TOTAL AIRFLOW – STATION 4) | |
| TURBINE COOLING (OUTER WALL) | 8.4% $W_{A4}$ (TOTAL AIRFLOW – STATION 4) | |
| PILOT BURNER NOZZLE | DLN 27700-13, 7 LOCATIONS | |
| MAIN BURNER NOZZLE | DLN 27700-11, 13 LOCATIONS | |
| MAIN BURNER DILUTION OUTER WALL | LOUVER 22 | 15.22 |
| MAIN BURNER DILUTION OUTER WALL | LOUVER 21 | 25.74 |

MODIFICATIONS REFERENCE S22

ADD $0.457 \times 10^{-2}$m WIDE BLOCKAGE RING TO INNER LINER MAIN BURNER SWIRLER.

REMOVE INNER LINER MAIN BURNER DILUTION HOLES.

ADD A ROW OF DILUTION HOLES ($1.765 \times 10^{-2}$m DIAMETER) BEHIND EACH MAIN BURNER FUEL NOZZLE (13) IN LOUVER NUMBER 22.

ADD A DILUTION HOLE ($1.537 \times 10^{-2}$m DIAMETER) BETWEEN EACH EXISTING HOLE IN LOUVER 23 AND CAPPED IT.

EXTENDED INNER LOUVER SCOOP ($6.868 \times 10^{-2}$m DIAMETER) AND OUTER LOUVER SCOOP ($2.794 \times 10^{-2}$m DIAMETER) UPSTREAM.

TRIP RAMP ADDED TO OUTER LOUVER.

*Figure A-20 Vorbix Combustor Configuration S23*

ORIGINAL PAGE IS
OF POOR QUALITY

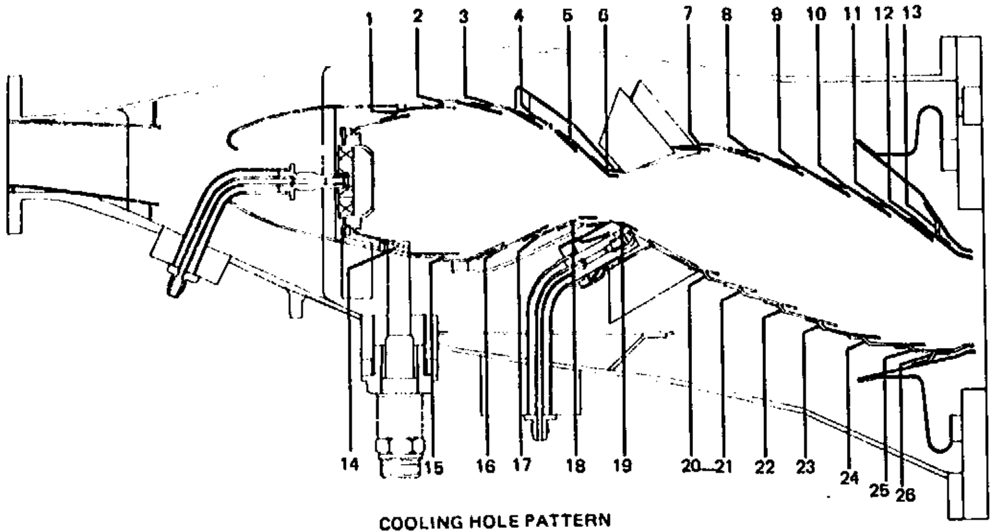

COOLING HOLE PATTERN

| INNER LINER | | | | OUTER LINER | | | |
|---|---|---|---|---|---|---|---|
| LOUVER | DIA. $m \times 10^{-3}$ | #HOLES | AREA $m^2 \times 10^{-4}$ | LOUVER | DIA. $m \times 10^{-3}$ | #HOLES | AREA $m^2 \times 10^{-4}$ |
| 1 | 1.63 | 84 | 1.74 | 14 | 2.34 | 84 | 3.61 |
| 2 | 1.63 | 84 | 1.74 | 15 | 1.63 | 84 | 1.74 |
| 3 | 1.63 | 84 | 1.74 | 16 | 1.63 | 84 | 1.74 |
| 4 | 1.63 | 84 | 1.74 | 17 | 1.63 | 84 | 1.74 |
| 5 | 1.96 | 84 | 2.52 | 18 | 1.80 | 84 | 2.15 |
| 6 | 2.27 | 84 | 3.45 | 19 | 2.08 | 130 | 4.43 |
| 7 | 1.93 | 85 | 2.49 | 20 | 1.63 | 99 | 2.05 |
| 8 | 1.32 | 85 | 1.17 | 21 | 1.63 | 99 | 2.05 |
| 9 | 1.32 | 85 | 1.17 | 22 | 1.32 | 118 | 1.62 |
| 10 | 1.32 | 85 | 1.17 | 23 | 1.32 | 95 | 1.30 |
| 11 | 1.32 | 85 | 1.17 | 24 | 1.32 | 106 | 1.45 |
| 12 | 1.32 | 85 | 1.17 | 25 | 1.79 | 85 | 2.11 |
| 13 | 1.32 | 85 | 1.17 | 26 | 1.32 | 110 | 1.51 |

| | | AREA $m^2 \times 10^{-4}$ |
|---|---|---|
| PILOT BURNER SWIRLER (INCLUDING SLOTS IN OUTER TUBE OF SWIRLER) | 7 LEFTHAND SWIRLERS | 27.458 $A_{CD}$ (EFFECTIVE AREA) |
| BULKHEAD COOLING | 140 @ $0.234 \times 10^{-2}$m DIAMETER | 5.897 |
| MAIN BURNER NOZZLE COOLING | 52 @ $0.254 \times 10^{-2}$m DIAMETER | 2.632 |
| PILOT BURNER DILUTION (INNER WALL ROW 1) | 7 @ $1.631 \times 10^{-2}$m DIAMETER | 14.619 |
| PILOT BURNER DILUTION (OUTER WALL ROW 14) | 7 @ $1.631 \times 10^{-2}$m DIAMETER | 14.619 |
| MAIN BURNER SWIRLERS | 28 RIGHTHAND SWIRLERS | |
| SIDEWALL COOLING | 5% $W_{A4}$ (TOTAL AIRFLOW – STATION 4) | |
| TURBINE COOLING (INNER WALL) | 7.5% $W_{A4}$ (TOTAL AIRFLOW – STATION 4) | |
| TURBINE COOLING (OUTER WALL) | 8.4% $W_{A4}$ (TOTAL AIRFLOW – STATION 4) | |
| PILOT BURNER NOZZLE | DLN 27700-13, 7 LOCATIONS | |
| MAIN BURNER NOZZLE | DLN 27700-11, 13 LOCATIONS | |
| MAIN BURNER DILUTION OUTER WALL | LOUVER 22 | 11.877 |
| MAIN BURNER DILUTION OUTER WALL | LOUVER 21 | 15.961 |

MODIFICATION REFERENCE S23

CAP EACH DILUTION HOLE IN LOUVER 22 BEHIND EACH PILOT BURNER NOZZLE AND OPEN ONE $1.588 \times 10^{-2}$m DIAMETER BEHIND EACH MAIN BURNER NOZZLE.

*Figure A-21 Vorbix Combustor Configuration S24*

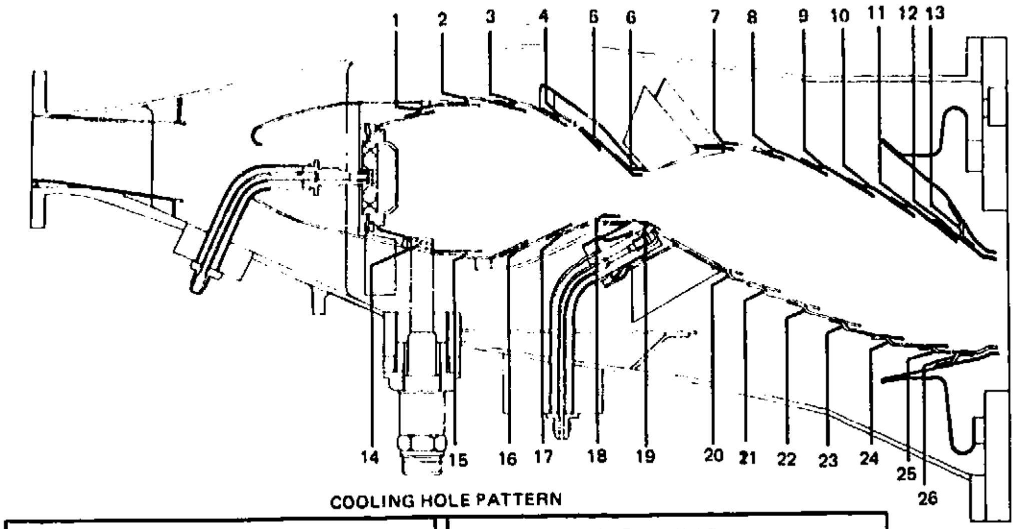

COOLING HOLE PATTERN

| INNER LINER | | | | OUTER LINER | | | |
|---|---|---|---|---|---|---|---|
| LOUVER | DIA. $m \times 10^{-3}$ | #HOLES | AREA $m^2 \times 10^{-4}$ | LOUVER | DIA. $m \times 10^{-3}$ | #HOLES | AREA $m^2 \times 10^{-4}$ |
| 1 | 1.63 | 84 | 1.74 | 14 | 2.34 | 84 | 3.61 |
| 2 | 1.63 | 84 | 1.74 | 15 | 1.63 | 84 | 1.74 |
| 3 | 1.63 | 84 | 1.74 | 16 | 1.63 | 84 | 1.74 |
| 4 | 1.63 | 84 | 1.74 | 17 | 1.63 | 84 | 1.74 |
| 5 | 1.96 | 84 | 2.52 | 18 | 1.80 | 84 | 2.15 |
| 6 | 2.27 | 84 | 3.45 | 19 | 2.08 | 130 | 4.43 |
| 7 | 1.93 | 85 | 2.49 | 20 | 1.63 | 99 | 2.05 |
| 8 | 1.32 | 85 | 1.17 | 21 | 1.63 | 99 | 2.05 |
| 9 | 1.32 | 85 | 1.17 | 22 | 1.32 | 118 | 1.62 |
| 10 | 1.32 | 85 | 1.17 | 23 | 1.32 | 95 | 1.30 |
| 11 | 1.32 | 85 | 1.17 | 24 | 1.32 | 106 | 1.45 |
| 12 | 1.32 | 85 | 1.17 | 25 | 1.79 | 85 | 2.11 |
| 13 | 1.32 | 85 | 1.17 | 26 | 1.32 | 110 | 1.51 |

| | | AREA $m^2 \times 10^{-4}$ |
|---|---|---|
| PILOT BURNER SWIRLER | 7 LEFT HAND SWIRLERS | 21.968 $A_{CD}$ (EFFECTIVE AREA) |
| BULKHEAD COOLING | 140 @ $0.234 \times 10^{-2}$m DIAMETER | 6.09 |
| MAIN BURNER NOZZLE COOLING | 52 @ $0.254 \times 10^{-2}$m DIAMETER | 2.63 |
| PILOT BURNER DILUTION (INNER WALL ROW 1) | 7 @ $1.63 \times 10^{-2}$m DIAMETER | 14.62 |
| PILOT BURNER DILUTION (OUTER WALL ROW 14) | 7 @ $2.06 \times 10^{-2}$m DIAMETER | 23.50 |
| MAIN BURNER SWIRLERS | 28 RIGHTHAND SWIRLERS | |
| SIDEWALL COOLING | 5% $W_{A4}$ (TOTAL AIRFLOW – STATION 4) | |
| TURBINE COOLING (INNER WALL) | 7.5% $W_{A4}$ (TOTAL AIRFLOW – STATION 4) | |
| TURBINE COOLING (OUTER WALL) | 8.4% $W_{A4}$ (TOTAL AIRFLOW – STATION 4) | |
| PILOT BURNER NOZZLE | DLN 27700-11 7 LOCATIONS | |
| MAIN BURNER NOZZLE | DLN 27700-11, 13 LOCATIONS | |
| MAIN BURNER DILUTION OUTER WALL | LOUVER 22 | 7.36 |
| MAIN BURNER DILUTION OUTER WALL | LOUVER 21 | 15.96 |
| MAIN BURNER DILUTION OUTER WALL | LOUVER 20 | 2.45 |

MODIFICATIONS REFERENCE S24

REDUCE PILOT BURNER SWIRLER AIRFLOW BY 20% (BLOCKAGE RING WIDTH $0.127 \times 10^{-2}$m)
INCREASED OUTER LINER PILOT BURNER DILUTION TO MAINTAIN PILOT BURNER EQUIVALENCE RATIO
REDUCE INNER LINER MAIN BURNER SWIRLER EFFECTIVE AREA BY ONE THIRD.
ADD ONE $1.688 \times 10^{-2}$m DIAMETER HOLE IN LOUVER 20 BEHIND EACH STRUT (2).

*Figure A-22 Vorbix Combustor Configuration S25*

# APPENDIX B

# EXPERIMENTAL TEST DATA

PRECEDING PAGE BLANK NOT FILMED

# TEST RESULTS FOR HYBRID COMBUSTOR
# CONFIGURATION H1

| Point Number | Airflow - Total kg/s | Airflow - Combustor kg/s | Fuel Flow - Pilot kg/s | Fuel Flow - Main kg/s | Fuel Flow - Total kg/s | Fuel Temperature K | Inlet Total Temperature K | Inlet Total Pressure – atm | Fuel-Air Ratio Metered (M) | Fuel-Air Ratio Carbon Balance (CB) | Fuel-Air (CB) / Fuel-Air (M) | Ideal Combustor Exit Temperature K | Maximum Combustor Exit Temperature K | Pattern Factor | Reference Velocity - m/s | $CO_2$ - % Volume | $O_2$ - % Volume | CO (EI) | THC (EI) | $NO_X$(EI) | Gas Sample Combustion Efficiency | Humidity (g $H_2O$/kg air) | SAE Smoke Number | Comments |
|---|---|---|---|---|---|---|---|---|---|---|---|---|---|---|---|---|---|---|---|---|---|---|---|---|
| 51 | 5.18 | 4.11 | 0.0470 | 0.0 | 0.0470 | 293. | 436. | 2.97 | 0.0114 | 0.0 | 0.0 | 879. | 1469. | 1.33 | 19.3 | 0.0 | 0.0 | 0.0 | 0.0 | 0.0 | 0.0 | 1.7 | T/C TRAV | IDLE |
| 51 | 5.17 | 4.07 | 0.0471 | 0.0 | 0.0471 | 294. | 430. | 2.96 | 0.0116 | 0.0101 | 0.87 | 878. | 0. | 0.0 | 18.8 | 2.04 | 17.5 | 12.3 | 10.8 | 3.0 | 98.5 | 1.7 | | IDLF |
| 62 | 5.03 | 4.00 | 0.0396 | 0.0 | 0.0396 | 294. | 427. | 2.87 | 0.0099 | 0.0088 | 0.89 | 826. | 0. | 0.0 | 19.0 | 1.74 | 18.0 | 48.7 | 16.2 | 2.1 | 97.0 | 1.7 | | IDLE |
| 73 | 5.07 | 4.04 | 0.0631 | 0.0 | 0.0631 | 294. | 427. | 2.84 | 0.0156 | 0.0163 | 1.04 | 1018. | 0. | 0.0 | 19.4 | 3.06 | 15.9 | 21.4 | 3.6 | 3.8 | 99.1 | 1.7 | SN=2 | IDLE |
| 820 | 8.98 | 7.14 | 0.0377 | 0.0811 | 0.1188 | 290. | 771. | 6.82 | 0.0166 | 0.0193 | 1.16 | 1346. | 0. | 0.0 | 25.8 | 3.65 | 14.9 | 78.7 | 39.6 | 7.5 | 93.6 | 1.7 | | SLTO |
| 919 | 8.95 | 7.12 | 0.0451 | 0.0968 | 0.1419 | 289. | 768. | 6.87 | 0.0199 | 0.0 | 0.0 | 1445. | 1748. | 0.45 | 25.6 | 0.0 | 0.0 | 0.0 | 0.0 | 0.0 | 0.0 | 1.7 | T/C TRAV | SLTD |
| 919 | 8.97 | 7.11 | 0.0451 | 0.0969 | 0.1420 | 290. | 769. | 6.86 | 0.0200 | 0.0230 | 1.15 | 1448. | 0. | 0.0 | 25.4 | 4.48 | 13.4 | 37.3 | 24.2 | 10.2 | 96.3 | 1.7 | | SLTO |
| 1018 | 8.91 | 7.08 | 0.0482 | 0.1039 | 0.1521 | 289. | 769. | 6.74 | 0.0215 | 0.0229 | 1.07 | 1493. | 0. | 0.0 | 25.8 | 4.58 | 16.5 | 6.6 | 6.3 | 10.2 | 99.1 | 1.3 | | SLTO |
| 1124 | 8.90 | 7.07 | 0.0372 | 0.1193 | 0.1515 | 290. | 772. | 6.80 | 0.0214 | 0.0290 | 1.36 | 1494. | 0. | 0.0 | 25.6 | 5.57 | 12.4 | 49.0 | 29.2 | 8.7 | 95.5 | 1.4 | | SLTD |
| 1225 | 8.97 | 7.14 | 0.0400 | 0.1120 | 0.1520 | 290. | 770. | 6.81 | 0.0213 | 0.0293 | 1.38 | 1489. | 0. | 0.0 | 25.8 | 5.71 | 15.2 | 33.0 | 19.0 | 9.3 | 97.0 | 1.4 | | SLTD |
| 1532 | 8.94 | 7.10 | 0.1103 | 0.0 | 0.1103 | 291. | 768. | 6.80 | 0.0155 | 0.0143 | 0.92 | 1309. | 0. | 0.0 | 25.5 | 2.91 | 17.0 | 2.3 | 1.5 | 20.2 | 99.8 | 1.6 | PRIM ONLY | SLTO |
| 1431 | 9.03 | 7.18 | 0.0704 | 0.0 | 0.0704 | 294. | 768. | 6.87 | 0.0098 | 0.0094 | 0.96 | 1121. | 0. | 0.0 | 25.6 | 1.93 | 18.7 | 1.6 | 1.6 | 12.8 | 99.8 | 1.6 | PRIM ONLY | SLTO |
| 1330 | 9.10 | 7.23 | 0.0341 | 0.0 | 0.0341 | 296. | 769. | 7.02 | 0.0047 | 0.0046 | 0.98 | 945. | 0. | 0.0 | 25.2 | 0.39 | 21.5 | 219.5 | 456.1 | 2.6 | 42.1 | 1.6 | PRIM ONLY | SLTD |

ORIGINAL PAGE IS
OF POOR QUALITY

# TEST RESULTS FOR HYBRID COMBUSTOR
# CONFIGURATION H2

| Point Number | Airflow - Total kg/s | Airflow - Combustor kg/s | Fuel Flow - Pilot kg/s | Fuel Flow - Main kg/s | Fuel Flow - Total kg/s | Fuel Temperature K | Inlet Total Temperature K | Inlet Total Pressure – atm | Fuel-Air Ratio Metered (M) | Fuel-Air Ratio Carbon Balance (CB) | Fuel-Air (CB) / Fuel-Air (M) | Ideal Combustor Exit Temperature K | Maximum Combustor Exit Temperature K | Pattern Factor | Reference Velocity - m/s | $CO_2$ - % Volume | $O_2$ - % Volume | CO (EI) | THC (EI) | $NO_X$(EI) | Gas Sample Combustion Efficiency | Humidity (g $H_2O$/kg air) | SAE Smoke Number | Comments |
|---|---|---|---|---|---|---|---|---|---|---|---|---|---|---|---|---|---|---|---|---|---|---|---|---|
| 21 | 5.03 | 3.99 | 0.0491 | 0.0 | 0.0491 | 294. | 433. | 2.93 | 0.0123 | 0.0 | 0.0 | 907. | 1615. | 1.49 | 18.8 | 0.0 | 0.0 | 0.0 | 0.0 | 0.0 | 0.0 | 1.6 | T/C TRAV | IDLE |
| 21 | 5.18 | 4.10 | 0.0490 | 0.0 | 0.0490 | 294. | 428. | 2.95 | 0.0120 | 0.0103 | 0.86 | 890. | 0. | 0.0 | 18.9 | 2.09 | 17.6 | 8.7 | 1.0 | 3.8 | 99.7 | 1.6 | | IDLE |
| 1234 | 5.07 | 4.02 | 0.0492 | 0.0 | 0.0492 | 294. | 430. | 2.94 | 0.0122 | 0.0043 | 0.35 | 903. | 0. | 0.0 | 18.7 | 0.87 | 19.0 | 10.8 | 1.8 | 4.1 | 99.5 | 1.6 | 107.8 | 4 PORTS |
| 211 | 5.08 | 4.01 | 0.0493 | 0.0 | 0.0493 | 294. | 424. | 2.78 | 0.0123 | 0.0108 | 0.88 | 903. | 0. | 0.0 | 19.8 | 2.10 | 17.0 | 7.2 | 52.4 | 3.2 | 93.8 | 1.6 | 107.8 | PORT 1 |
| 212 | 5.08 | 4.03 | 0.0490 | 0.0 | 0.0490 | 294. | 430. | 2.90 | 0.0122 | 0.0037 | 0.30 | 899. | 0. | 0.0 | 19.1 | 0.75 | 18.9 | 14.4 | 5.2 | 4.1 | 99.1 | 1.6 | 107.8 | PORT 2 |
| 213 | 5.10 | 4.04 | 0.0491 | 0.0 | 0.0491 | 294. | 430. | 2.93 | 0.0122 | 0.0025 | 0.20 | 899. | 0. | 0.0 | 18.9 | 0.51 | 19.2 | 17.8 | 6.2 | 4.9 | 98.9 | 1.6 | 107.8 | PORT 3 |
| 214 | 5.07 | 4.01 | 0.0492 | 0.0 | 0.0492 | 294. | 423. | 2.93 | 0.0123 | 0.0010 | 0.08 | 901. | 0. | 0.0 | 18.7 | 0.21 | 19.6 | 16.8 | 23.0 | 5.2 | 96.9 | 1.7 | 107.8 | PORT 4 |
| 1234 | 5.08 | 4.01 | 0.0493 | 0.0 | 0.0493 | 294. | 425. | 2.92 | 0.0123 | 0.0049 | 0.40 | 900. | 0. | 0.0 | 18.6 | 1.00 | 18.6 | 8.8 | 1.0 | 3.8 | 99.7 | 1.7 | 123.5 | 4 PORTS |
| 211 | 5.10 | 4.04 | 0.0495 | 0.0 | 0.0495 | 294. | 429. | 2.92 | 0.0123 | 0.0150 | 1.22 | 902. | 0. | 0.0 | 18.9 | 3.03 | 15.6 | 12.8 | 2.4 | 3.7 | 99.4 | 1.7 | 123.5 | PORT 1 |
| 212 | 5.03 | 3.93 | 0.0498 | 0.0 | 0.0498 | 294. | 428. | 2.89 | 0.0125 | 0.0033 | 0.26 | 910. | 0. | 0.0 | 18.7 | 0.68 | 19.0 | 6.1 | 1.5 | 3.7 | 99.7 | 1.7 | 123.5 | PORT 2 |
| 213 | 5.12 | 4.05 | 0.0497 | 0.0 | 0.0497 | 294. | 427. | 2.93 | 0.0123 | 0.0018 | 0.15 | 900. | 0. | 0.0 | 18.8 | 0.37 | 19.4 | 6.3 | 1.6 | 4.3 | 99.7 | 1.7 | 123.5 | PORT 3 |
| 214 | 5.09 | 4.04 | 0.0497 | 0.0 | 0.0497 | 294. | 426. | 2.92 | 0.0123 | 0.0011 | 0.09 | 901. | 0. | 0.0 | 18.8 | 0.23 | 19.6 | 6.6 | 3.9 | 4.8 | 99.4 | 1.7 | 123.5 | PORT 4 |
| 32 | 5.16 | 4.09 | 0.0309 | 0.0 | 0.0309 | 296. | 430. | 2.93 | 0.0076 | 0.0061 | 0.80 | 732. | 0. | 0.0 | 19.2 | 0.98 | 19.6 | 100.5 | 188.5 | 1.1 | 75.9 | 1.7 | | IDLE |
| 43 | 5.15 | 4.09 | 0.0628 | 0.0 | 0.0628 | 294. | 426. | 2.98 | 0.0154 | 0.0135 | 0.88 | 1007. | 0. | 0.0 | 18.6 | 2.70 | 17.0 | 30.7 | 0.3 | 4.4 | 99.3 | 1.7 | | IDLE |
| 518 | 9.13 | 7.03 | 0.0556 | 0.1044 | 0.1600 | 291. | 767. | 6.89 | 0.0228 | 0.0240 | 1.05 | 1529. | 0. | 0.0 | 25.0 | 4.82 | 13.8 | 10.3 | 0.5 | 9.7 | 99.7 | 1.7 | | SLTO |
| 625 | 8.90 | 7.04 | 0.0390 | 0.1185 | 0.1575 | 291. | 769. | 6.86 | 0.0224 | 0.0224 | 1.00 | 1519. | 0. | 0.0 | 25.1 | 4.88 | 13.1 | 12.1 | 0.6 | 11.7 | 99.6 | 1.7 | SN=1 | SLTO |
| 724 | 9.17 | 7.27 | 0.0317 | 0.1262 | 0.1579 | 291. | 769. | 6.95 | 0.0217 | 0.0238 | 1.10 | 1500. | 0. | 0.0 | 25.6 | 4.60 | 13.3 | 58.7 | 18.5 | 11.7 | 96.5 | 1.6 | | SLTO |
| 820 | 9.02 | 7.13 | 0.0385 | 0.0822 | 0.1207 | 293. | 771. | 6.87 | 0.0169 | 0.0172 | 1.02 | 1355. | 0. | 0.0 | 25.5 | 2.55 | 16.0 | 142.1 | 154.7 | 5.0 | 78.8 | 1.6 | | SLTC |
| 970 | 9.36 | 7.41 | 0.0384 | 0.0821 | 0.1205 | 293. | 764. | 7.02 | 0.0163 | 0.0 | 0.0 | 1328. | 1578. | 0.44 | 25.8 | 0.0 | 0.0 | 0.0 | 0.0 | 0.0 | 0.0 | 1.6 | T/C TRAV | SLTO |
| 919 | 8.88 | 7.03 | 0.0385 | 0.1011 | 0.1396 | 291. | 766. | 6.80 | 0.0198 | 0.0205 | 1.04 | 1441. | 0. | 0.0 | 25.2 | 3.55 | 15.3 | 107.1 | 113.3 | 7.5 | 84.4 | 1.6 | | SLTC |
| 1012 | 9.22 | 7.31 | 0.0527 | 0.0961 | 0.1488 | 291. | 730. | 6.80 | 0.0204 | 0.0216 | 1.06 | 1427. | 0. | 0.0 | 25.1 | 4.30 | 14.8 | 28.5 | 3.5 | 7.0 | 98.9 | 1.5 | | CLIMB |
| 1017 | 10.39 | 8.21 | 0.0854 | 0.0230 | 0.1084 | 291. | 587. | 6.74 | 0.0132 | 0.0126 | 0.95 | 1074. | 0. | 0.0 | 22.9 | 1.92 | 18.1 | 43.6 | 289.4 | 3.6 | 65.5 | 1.4 | | APPR |
| 1211 | 10.44 | 8.27 | 0.0565 | 0.0555 | 0.1120 | 291. | 588. | 6.78 | 0.0135 | 0.0065 | 0.48 | 1085. | 0. | 0.0 | 22.9 | 1.18 | 19.3 | 111.6 | 300.0 | 1.8 | 62.7 | 1.4 | THC 300+ | APP |

~~PRECEDING PAGE BLANK NOT FILMED~~

ORIGINAL PAGE IS
OF POOR QUALITY

# TEST RESULTS FOR HYBRID COMBUSTOR CONFIGURATION H3

| Point Number | Airflow - Total kg/s | Airflow - Combustor kg/s | Fuel Flow - Pilot kg/s | Fuel Flow - Main kg/s | Fuel Flow - Total kg/s | Fuel Temperature K | Inlet Total Temperature K | Inlet Total Pressure – atm | Fuel-Air Ratio Metered (M) | Fuel-Air Ratio Carbon Balance (CB) | Fuel-Air (CB) / Fuel-Air (M) | Ideal Combustor Exit Temperature K | Maximum Combustor Exit Temperature K | Pattern Factor | Reference Velocity - m/s | $CO_2$ - % Volume | $O_2$ - % Volume | CO (EI) | THC (EI) | $NO_X$(EI) | Gas Sample Combustion Efficiency | Humidity (g $H_2O$/kg air) | SAE Smoke Number | Comments |
|---|---|---|---|---|---|---|---|---|---|---|---|---|---|---|---|---|---|---|---|---|---|---|---|---|
| 21 | 5.07 | 3.98 | 0.0491 | 0.0 | 0.0491 | 295. | 425. | 2.94 | 0.0123 | 0.0107 | 0.87 | 901. | 0. | 0.0 | 18.3 | 2.19 | 17.4 | 9.9 | 0.4 | 5.6 | 99.7 | 1.7 | | IDLE |
| 32 | 5.07 | 3.98 | 0.0362 | 0.0 | 0.0362 | 296. | 426. | 2.99 | 0.0091 | 0.0069 | 0.76 | 785. | 0. | 0.0 | 18.0 | 1.37 | 18.9 | 51.3 | 17.5 | 1.8 | 96.8 | 1.7 | | IDLE |
| 21 | 5.06 | 3.98 | 0.0491 | 0.0 | 0.0491 | 296. | 428. | 2.94 | 0.0173 | 0.0 | 0.0 | 903. | 1390. | 1.02 | 18.4 | 0.0 | 0.0 | 0.0 | 0.0 | 0.0 | 0.0 | 1.7 | | IDLE |
| 43 | 5.05 | 3.97 | 0.0627 | 0.0 | 0.0627 | 294. | 427. | 3.01 | 0.0158 | 0.0141 | 0.89 | 1024. | 0. | 0.0 | 17.9 | 2.85 | 16.5 | 23.2 | 0.3 | 4.4 | 99.4 | 1.7 | | IDLE |
| 215 | 5.05 | 3.97 | 0.0493 | 0.0 | 0.0493 | 295. | 427. | 2.93 | 0.0124 | 0.0084 | 0.68 | 906. | 0. | 0.0 | 18.4 | 1.71 | 18.4 | 6.9 | 2.1 | 2.5 | 99.6 | 1.7 | | IDLE |
| 211 | 5.08 | 3.99 | 0.0488 | 0.0 | 0.0488 | 295. | 427. | 2.94 | 0.0122 | 0.0170 | 1.39 | 899. | 0. | 0.0 | 18.4 | 3.42 | 15.5 | 8.7 | 8.9 | 2.0 | 98.8 | 1.7 | PORT 1 | IDLE |
| 212 | 5.03 | 3.95 | 0.0488 | 0.0 | 0.0488 | 295. | 426. | 2.93 | 0.0123 | 0.0105 | 0.85 | 902. | 0. | 0.0 | 18.3 | 2.14 | 17.3 | 5.0 | 2.8 | 2.5 | 99.6 | 1.7 | PORT 2 | IDLE |
| 213 | 5.07 | 3.98 | 0.0488 | 0.0 | 0.0488 | 295. | 428. | 2.93 | 0.0123 | 0.0047 | 0.38 | 901. | 0. | 0.0 | 18.5 | 0.96 | 19.0 | 6.4 | 2.6 | 2.9 | 99.6 | 1.7 | PORT 3 | IDLE |
| 214 | 5.06 | 3.97 | 0.0488 | 0.0 | 0.0488 | 295. | 429. | 2.93 | 0.0123 | 0.0023 | 0.19 | 903. | 0. | 0.0 | 18.6 | 0.47 | 19.6 | 9.3 | 5.2 | 3.2 | 99.2 | 1.7 | PORT 4 | IDLE |
| 26 | 10.53 | 8.29 | 0.1093 | 0.0 | 0.1093 | 293. | 592. | 6.70 | 0.0132 | 0.0111 | 0.84 | 1077. | 0. | 0.0 | 23.4 | 2.47 | 17.3 | 1.9 | 1.2 | 8.7 | 99.8 | 1.6 | ALL PRIM | APPR |
| 1 | 6.85 | 5.38 | 0.0593 | 0.0 | 0.0593 | 295. | 467. | 3.76 | 0.0099 | 0.0073 | 0.74 | 849. | 0. | 0.0 | 21.3 | 1.47 | 18.6 | 24.3 | 6.5 | 2.8 | 98.7 | 1.5 | UNBLED | IDLE |
| 36 | 10.58 | 8.32 | 0.0898 | 0.0 | 0.0898 | 294. | 589. | 6.79 | 0.0108 | 0.0089 | 0.82 | 993. | 0. | 0.0 | 23.1 | 1.83 | 18.2 | 2.2 | 0.5 | 8.3 | 99.9 | 1.6 | PRIM ONLY | APPR |
| 46 | 10.61 | 8.34 | 0.0629 | 0.0 | 0.0629 | 295. | 597. | 6.76 | 0.0075 | 0.0055 | 0.73 | 880. | 0. | 0.0 | 23.3 | 1.09 | 19.4 | 54.3 | 8.8 | 3.8 | 97.7 | 1.6 | PRIM ONLY | APPR |
| 66 | 10.63 | 8.38 | 0.0 | 0.1133 | 0.1133 | 294. | 587. | 6.70 | 0.0135 | 0.0155 | 1.15 | 1084. | 0. | 0.0 | 23.3 | 3.13 | 16.0 | 13.3 | 2.0 | 7.7 | 99.5 | 1.7 | 11 SEC | APPR |
| 66 | 10.62 | 8.35 | 0.0 | 0.1133 | 0.1133 | 295. | 585. | 6.72 | 0.0136 | 0.0 | 0.0 | 1085. | 1529. | 0.89 | 23.3 | 0.0 | 0.0 | 0.0 | 0.0 | 0.0 | 0.0 | 1.7 | 11 SEC | APPR |
| 76 | 10.67 | 8.40 | 0.0 | 0.0826 | 0.0826 | 295. | 585. | 6.81 | 0.0098 | 0.0113 | 1.15 | 956. | 0. | 0.0 | 23.1 | 2.26 | 17.6 | 36.2 | 12.3 | 5.5 | 97.7 | 1.7 | 11 SEC | APPR |
| 86 | 10.60 | 8.33 | 0.0 | 0.0977 | 0.0977 | 295. | 593. | 6.97 | 0.0117 | 0.0135 | 1.15 | 1029. | 0. | 0.0 | 22.6 | 2.72 | 16.6 | 19.2 | 4.6 | 7.0 | 99.0 | 1.7 | 7 SEC | APPR |
| 776 | 10.68 | 8.47 | 0.0 | 0.1136 | 0.1136 | 294. | 592. | 6.74 | 0.0135 | 0.0154 | 1.14 | 1087. | 0. | 0.0 | 23.7 | 3.17 | 15.7 | 11.6 | 0.4 | 7.1 | 99.7 | 1.7 | 7 SEC | APPR |
| 766 | 10.69 | 8.42 | 0.0 | 0.0824 | 0.0824 | 295. | 586. | 6.76 | 0.0098 | 0.0113 | 1.15 | 955. | 0. | 0.0 | 23.4 | 2.28 | 16.8 | 13.4 | 2.0 | 6.9 | 99.5 | 1.7 | 7 SEC | APPR |
| 786 | 10.62 | 8.34 | 0.0606 | 0.0 | 0.0606 | 296. | 589. | 6.77 | 0.0073 | 0.0081 | 1.11 | 868. | 0. | 0.0 | 23.2 | 1.62 | 18.2 | 39.0 | 15.4 | 5.2 | 97.3 | 1.7 | 7 SEC | APPR |
| 1026 | 9.08 | 7.15 | 0.0850 | 0.0 | 0.0850 | 296. | 763. | 6.78 | 0.0119 | 0.0211 | 1.77 | 1186. | 0. | 0.0 | 25.7 | 4.42 | 12.9 | 0.9 | 0.5 | 11.6 | 99.9 | 1.7 | | |

## TEST RESULTS FOR HYBRID COMBUSTOR CONFIGURATION H4

| Point Number | Airflow - Total kg/s | Airflow - Combustor kg/s | Fuel Flow - Pilot kg/s | Fuel Flow - Main kg/s | Fuel Flow - Total kg/s | Fuel Temperature K | Inlet Total Temperature K | Inlet Total Pressure – atm | Fuel-Air Ratio Metered (M) | Fuel-Air Ratio Carbon Balance (CB) | Fuel-Air (CB) / Fuel-Air (M) | Ideal Combustor Exit Temperature K | Maximum Combustor Exit Temperature K | Pattern Factor | Reference Velocity - m/s | $CO_2$ - % Volume | $O_2$ - % Volume | CO (EI) | THC (EI) | $NO_X$(EI) | Gas Sample Combustion Efficiency | Humidity (g $H_2O$/kg air) | SAE Smoke Number | Comments |
|---|---|---|---|---|---|---|---|---|---|---|---|---|---|---|---|---|---|---|---|---|---|---|---|---|
| 71 | 5.04 | 3.96 | 0.0493 | 0.0 | 0.0493 | 293. | 424. | 2.93 | 0.0124 | 0.0 | 0.0 | 904. | 1431. | 1.10 | 18.3 | 0.0 | 0.0 | 0.0 | 0.0 | 0.0 | 0.0 | 1.7 | T/C TRAV | IDLE |
| 21 | 5.04 | 3.96 | 0.0492 | 0.0 | 0.0492 | 293. | 425. | 2.92 | 0.0124 | 0.0097 | 0.78 | 904. | 0. | 0.0 | 18.4 | 1.97 | 17.9 | 8.4 | 0.6 | 3.4 | 99.7 | 1.8 | | IDLE |
| 32 | 5.06 | 3.98 | 0.0364 | 0.0 | 0.0364 | 294. | 425. | 2.95 | 0.0091 | 0.0065 | 0.71 | 786. | 0. | 0.0 | 18.2 | 1.28 | 18.9 | 44.6 | 11.4 | 1.6 | 97.6 | 1.8 | | IDLE |
| 43 | 5.04 | 3.95 | 0.0627 | 0.0 | 0.0627 | 294. | 423. | 2.97 | 0.0158 | 0.0130 | 0.82 | 1021. | 0. | 0.0 | 17.9 | 2.62 | 16.9 | 22.4 | 0.5 | 4.2 | 99.4 | 1.8 | | IDLE |
| 56 | 10.49 | 8.24 | 0.0 | 0.1105 | 0.1105 | 294. | 590. | 6.76 | 0.0134 | 0.0135 | 1.01 | 1083. | 0. | 0.0 | 23.0 | 2.67 | 16.6 | 51.9 | 1.7 | 6.6 | 98.6 | 1.7 | 4 SEC | APPR |
| 66 | 10.54 | 8.29 | 0.0 | 0.0901 | 0.0901 | 295. | 593. | 6.74 | 0.0109 | 0.0108 | 0.99 | 999. | 0. | 0.0 | 23.3 | 2.19 | 17.1 | 23.3 | 1.0 | 6.6 | 99.3 | 1.7 | 4 SEC | APPR |
| 76 | 10.51 | 8.27 | 0.0 | 0.0691 | 0.0691 | 295. | 591. | 6.78 | 0.0083 | 0.0084 | 1.01 | 909. | 0. | 0.0 | 23.1 | 1.72 | 18.4 | 6.9 | 2.4 | 6.8 | 99.6 | 1.8 | 4 SEC | APPR |
| 766 | 10.37 | 8.15 | 0.0 | 0.0564 | 0.0564 | 296. | 593. | 6.81 | 0.0069 | 0.0070 | 1.01 | 859. | 0. | 0.0 | 22.6 | 1.43 | 18.8 | 11.0 | 5.6 | 6.6 | 99.1 | 1.8 | 4 SEC | APPR |
| 84 | 10.54 | 8.29 | 0.1145 | 0.0 | 0.1145 | 294. | 592. | 6.94 | 0.0138 | 0.0097 | 0.70 | 1098. | 0. | 0.0 | 22.6 | 1.98 | 18.0 | 2.1 | 0.5 | 10.0 | 99.9 | 1.8 | PRIM ONLY | APPR |
| 87 | 10.69 | 8.42 | 0.0957 | 0.0 | 0.0957 | 295. | 590. | 6.72 | 0.0114 | 0.0080 | 0.70 | 1014. | 0. | 0.0 | 23.7 | 1.65 | 18.7 | 1.7 | 0.3 | 7.1 | 99.9 | 1.8 | PRIM ONLY | APPR |
| 88 | 10.63 | 8.37 | 0.0717 | 0.0 | 0.0717 | 295. | 593. | 6.89 | 0.0086 | 0.0057 | 0.66 | 918. | 0. | 0.0 | 23.0 | 1.17 | 19.7 | 10.4 | 1.5 | 3.8 | 99.6 | 1.8 | PRIM ONLY | APPR |
| 976 | 9.09 | 7.16 | 0.0693 | 0.0907 | 0.1600 | 294. | 766. | 6.87 | 0.0224 | 0.0185 | 0.83 | 1516. | 0. | 0.0 | 25.5 | 3.75 | 15.0 | 2.3 | 0.0 | 15.7 | 99.9 | 1.8 | | SLTO |
| 1018 | 9.12 | 7.17 | 0.0524 | 0.1048 | 0.1572 | 294. | 766. | 6.87 | 0.0219 | 0.0186 | 0.85 | 1503. | 0. | 0.0 | 25.5 | 3.78 | 15.3 | 4.2 | 0.0 | 15.5 | 99.9 | 1.8 | | SLTO |
| 1125 | 9.16 | 7.21 | 0.0390 | 0.1170 | 0.1560 | 294. | 766. | 6.82 | 0.0216 | 0.0189 | 0.87 | 1495. | 0. | 0.0 | 25.8 | 3.75 | 14.8 | 26.7 | 2.6 | 15.4 | 99.1 | 1.8 | | SLTO |
| 1512 | 9.47 | 7.45 | 0.0452 | 0.1034 | 0.1486 | 294. | 739. | 6.89 | 0.0200 | 0.0167 | 0.83 | 1421. | 0. | 0.0 | 25.5 | 2.97 | 16.0 | 90.1 | 94.1 | 12.1 | 87.0 | 1.7 | | CLIMB |
| 1613 | 9.51 | 7.48 | 0.0385 | 0.1118 | 0.1503 | 294. | 738. | 6.84 | 0.0201 | 0.0167 | 0.83 | 1425. | 0. | 0.0 | 25.8 | 3.04 | 16.0 | 80.0 | 79.4 | 13.9 | 89.9 | 1.7 | | CLIMB |
| 1714 | 9.39 | 7.39 | 0.0552 | 0.0933 | 0.1485 | 294. | 739. | 6.79 | 0.0201 | 0.0159 | 0.79 | 1426. | 0. | 0.0 | 25.7 | 2.74 | 16.4 | 108.4 | 111.4 | 10.3 | 84.6 | 1.7 | | CLIMB |
| 1420 | 9.18 | 7.22 | 0.0398 | 0.0773 | 0.1171 | 294. | 769. | 6.87 | 0.0162 | 0.0 | 0.0 | 1331. | 1596. | 0.47 | 25.8 | 0.0 | 0.0 | 0.0 | 0.0 | 0.0 | 0.0 | 1.7 | T/C TRAV | SLTO |
| 1824 | 9.16 | 7.20 | 0.0 | 0.1326 | 0.1326 | 295. | 768. | 6.74 | 0.0184 | 0.0169 | 0.92 | 1399. | 0. | 0.0 | 26.2 | 3.41 | 15.6 | 12.2 | 0.8 | 19.2 | 99.6 | 1.8 | SEC ONLY | SLTO |
| 1925 | 9.14 | 7.20 | 0.0 | 0.1085 | 0.1085 | 295. | 770. | 6.84 | 0.0151 | 0.0135 | 0.89 | 1295. | 0. | 0.0 | 25.9 | 2.75 | 16.7 | 4.0 | 0.6 | 19.9 | 99.8 | 1.8 | SEC ONLY | SLTO |
| 2026 | 9.12 | 7.17 | 0.0 | 0.0919 | 0.0919 | 296. | 768. | 6.79 | 0.0128 | 0.0113 | 0.88 | 1221. | 0. | 0.0 | 25.9 | 2.31 | 17.4 | 2.7 | 0.7 | 17.1 | 99.9 | 1.8 | SEC ONLY | SLTO |
| 2124 | 9.18 | 7.21 | 0.0635 | 0.0 | 0.0635 | 297. | 770. | 6.95 | 0.0088 | 0.0059 | 0.67 | 1089. | 0. | 0.0 | 25.5 | 1.22 | 19.4 | 1.8 | 1.8 | 9.4 | 99.8 | 1.8 | PRIM ONLY | SLTO |
| 2225 | 9.12 | 7.17 | 0.0466 | 0.0 | 0.0466 | 298. | 767. | 6.87 | 0.0065 | 0.0046 | 0.71 | 1006. | 0. | 0.0 | 25.5 | 0.92 | 19.7 | 29.9 | 5.2 | 4.7 | 98.7 | 1.8 | PRIM ONLY | SLTO |

# TEST RESULTS FOR HYBRID COMBUSTOR CONFIGURATION H5

| Point Number | Airflow - Total kg/s | Airflow - Combustor kg/s | Fuel Flow - Pilot kg/s | Fuel Flow - Main kg/s | Fuel Flow - Total kg/s | Fuel Temperature K | Inlet Total Temperature K | Inlet Total Pressure – atm | Fuel-Air Ratio Metered (M) | Fuel-Air Ratio Carbon Balance (CB) | Fuel-Air (CB) / Fuel-Air (M) | Ideal Combustor Exit Temperature K | Maximum Combustor Exit Temperature K | Pattern Factor | Reference Velocity - m/s | $CO_2$ - % Volume | $O_2$ - % Volume | CO (FI) | THC (FI) | $NO_x$(FI) | Gas Sample Combustion Efficiency | Humidity (g $H_2O$/kg air) | SAE Smoke Number | Comments |
|---|---|---|---|---|---|---|---|---|---|---|---|---|---|---|---|---|---|---|---|---|---|---|---|---|
| 21 | 5.15 | 4.04 | 0.0498 | 0.0 | 0.0468 | 300. | 429. | 2.95 | 0.0121 | 0.0 | 0.0 | 894. | 1753. | 1.85 | 18.7 | 0.0 | 0.0 | 0.0 | 0.0 | 0.0 | 0.0 | 3.5 | T/C TRAV | IDLE |
| 21 | 5.16 | 4.05 | 0.0497 | 0.0 | 0.0497 | 301. | 423. | 2.95 | 0.0120 | 0.0087 | 0.72 | 886. | 0. | 0.0 | 18.5 | 1.77 | 18.4 | 14.1 | 0.7 | 4.7 | 99.6 | 3.5 | | IDLE |
| 211 | 5.19 | 4.08 | 0.0497 | 0.0 | 0.0497 | 301. | 426. | 2.95 | 0.0119 | 0.0235 | 1.97 | 986. | 0. | 0.0 | 18.8 | 4.72 | 13.8 | 11.8 | 0.1 | 3.8 | 99.7 | 3.6 | PORT 1 | IDLE |
| 212 | 5.17 | 4.05 | 0.0489 | 0.0 | 0.0488 | 301. | 425. | 2.95 | 0.0120 | 0.0106 | 0.88 | 889. | 0. | 0.0 | 18.6 | 2.14 | 17.5 | 15.3 | 0.3 | 3.7 | 99.6 | 3.6 | PORT 2 | IDLE |
| 213 | 5.14 | 4.05 | 0.0488 | 0.0 | 0.0488 | 302. | 425. | 2.96 | 0.0121 | 0.0033 | 0.27 | 890. | 0. | 0.0 | 18.5 | 0.67 | 20.7 | 17.5 | 2.6 | 3.3 | 99.3 | 3.5 | CO PORT 3 | IDLE |
| 214 | 5.13 | 4.03 | 0.0488 | 0.0 | 0.0488 | 302. | 427. | 2.95 | 0.0121 | 0.0002 | 0.02 | 894. | 0. | 0.0 | 18.6 | 0.04 | 21.3 | 132.3 | 34.0 | 0.3 | 93.0 | 3.5 | DD PORT 4 | IDLE |
| 21 | 5.16 | 4.05 | 0.0491 | 0.0 | 0.0491 | 302. | 425. | 2.97 | 0.0121 | 0.0088 | 0.73 | 892. | 0. | 0.0 | 18.5 | 1.80 | 18.4 | 13.6 | 0.5 | 3.8 | 99.6 | 3.5 | | IDLE |
| 32 | 5.09 | 4.00 | 0.0358 | 0.0 | 0.0358 | 302. | 427. | 2.89 | 0.0090 | 0.0059 | 0.66 | 780. | 0. | 0.0 | 18.8 | 1.21 | 19.5 | 12.5 | 1.2 | 3.1 | 99.6 | 3.6 | | IDLE |
| 43 | 5.16 | 4.05 | 0.0627 | 0.0 | 0.0627 | 301. | 429. | 2.97 | 0.0155 | 0.0105 | 0.68 | 1012. | 0. | 0.0 | 18 7 | 2.07 | 18.2 | 68.0 | 0.6 | 3.7 | 98.3 | 3.6 | | IDLE |
| 526 | 9.19 | 7.22 | 0.0701 | 0.0868 | 0.1569 | 300. | 767. | 6.78 | 0.0217 | 0.0168 | 0.77 | 1498. | 0. | 0.0 | 26.1 | 3.38 | 15.9 | 16.8 | 1.9 | 15.5 | 99.4 | 3.0 | | SLTO |
| 618 | 9.20 | 7.22 | 0.0534 | 0.1032 | 0.1566 | 300. | 768. | 6.79 | 0.0217 | 0.0170 | 0.78 | 1496. | 0. | 0.0 | 26.1 | 3.43 | 15.3 | 13.0 | 1.5 | 10.5 | 99.5 | 3.0 | | SLTO |
| 725 | 9.17 | 7.22 | 0.0379 | 0.1190 | 0.1569 | 300. | 769. | 6.76 | 0.0217 | 0.0176 | 0.81 | 1499. | 0. | 0.0 | 26.2 | 3.56 | 14.6 | 13.1 | 1.0 | 10.6 | 99.6 | 3.0 | | SLTO |
| 874 | 9.19 | 7.27 | 0.0237 | 0.1365 | 0.1602 | 298. | 765. | 6.93 | 0.0222 | 0.0176 | 0.79 | 1510. | 0. | 0.0 | 25.4 | 3.32 | 16.0 | 70.1 | 49.8 | 10.1 | 92.6 | 2.4 | | SLTO |
| [illegible]012 | 9.50 | 7.46 | 0.0386 | 0.1088 | 0.1474 | 300. | 744. | 6.81 | 0.0198 | 0.0149 | 0.75 | 1419. | 0. | 0.0 | 26.1 | 2.98 | 16.9 | 33.3 | 4.0 | 6.6 | 98.8 | 2.2 | SMK1 | CLIMB |
| [illegible]012 | 9.50 | 7.46 | 0.0359 | 0.0761 | 0.1170 | 300. | 739. | 6.81 | 0.0150 | 0.0 | 0.0 | 1266. | 1404. | 0.26 | 25.9 | 0.0 | 0.0 | 0.0 | 0.0 | 0.0 | 0.0 | 2.2 | T/C TRAV | CLIMB |
| 116 | 10.63 | 8.38 | 0.1111 | 0.0 | 0.1111 | 301. | 598. | 6.85 | 0.0133 | 0.0084 | 0.63 | 1085. | 0. | 0.0 | 23.4 | 1.73 | 18.7 | 1.4 | 1.8 | 12.3 | 99.8 | 2.3 | PRIM ONLY | APPR |
| 116 | 10.60 | 8.34 | 0.1108 | 0.0 | 0.1108 | 301. | 599. | 6.82 | 0.0133 | 0.0 | 0.0 | 1089. | 1739. | 1.33 | 23.4 | 0.0 | 0.0 | 0.0 | 0.0 | 0.0 | 0.0 | 0.0 | PRIM ONLY | APPR |
| 176 | 10.66 | 8.38 | 0.0874 | 0.0 | 0.0874 | 301. | 597. | 6.83 | 0.0104 | 0.0068 | 0.65 | 986. | 0. | 0.0 | 23.4 | 1.40 | 19.0 | 1.5 | 0.9 | 10.1 | 99.9 | 2.6 | PRIM ONLY | APPR |
| 146 | 10.60 | 8.34 | 0.0 | 0.1129 | 0.1129 | 299. | 595. | 6.80 | 0.0135 | 0.0109 | 0.81 | 1091. | 0. | 0.0 | 23.3 | 1.97 | 17.6 | [illegible]23.8 | 95.8 | 3.4 | 86.0 | 3.0 | 11 SEC | APPR |
| 156 | 10.62 | 8.34 | 0.0 | 0.0907 | 0.0907 | 300. | 593. | 6.89 | 0.0109 | 0.0088 | 0.81 | 999. | 0. | 0.0 | 23.0 | 1.36 | 18.4 | 173.0 | 190.9 | 2.6 | 73.9 | 2.7 | 11 SFC | APPR |
| 166 | 10.62 | 8.35 | 0.0 | 0.0690 | 0.0690 | 301. | 593. | 6.79 | 0.0083 | 0.0056 | 0.67 | 906. | 0. | 0.0 | 23.3 | 0.59 | 20.0 | 146.1 | 475.7 | 1.9 | 41.6 | 3.2 | 11 SFC | APPR |
| 176 | 10.63 | 8.35 | 0.0 | 0.1117 | 0.1117 | 301. | 590. | 6.87 | 0.0134 | 0.0102 | 0.76 | 1081. | 0. | 0.0 | 23.0 | 1.88 | 17.8 | 81.6 | 78.0 | 5.3 | 89.1 | 2.8 | 7 SEC | APPR |
| 206 | 10.62 | 8.34 | 0.0 | 0.1065 | 0.1065 | 303. | 597. | 6.74 | 0.0128 | 0.0134 | 1.05 | 1067. | 0. | 0.0 | 23.7 | 2.54 | 16.3 | 74.8 | 49.0 | 6.4 | 92.6 | 2.5 | 4 SEC | APPR |
| 236 | 10.66 | 8.38 | 0.0525 | 0.0 | 0.0525 | 305. | 589. | 6.61 | 0.0063 | 0.0038 | 0.60 | 831. | 0. | 0.0 | 24.0 | 0.76 | 19.9 | 21.8 | 6.6 | 3.9 | 98.7 | 3.2 | PRIM ONLY | APPR |
| 136 | 10.63 | 8.34 | 0.0629 | 0.0 | 0.0629 | 303. | 464. | 6.79 | 0.0075 | 0.0047 | 0.63 | 886. | 0. | 0.0 | 23.6 | 1.00 | 19.5 | 1.7 | 1.1 | 3.9 | 99.8 | 2.5 | PRIM ONLY | APP |

# TEST RESULTS FOR HYBRID COMBUSTOR
# CONFIGURATION H6

| Point Number | Airflow - Total kg/s | Airflow - Combustor kg/s | Fuel Flow - Pilot kg/s | Fuel Flow - Main kg/s | Fuel Flow - Total kg/s | Fuel Temperature K | Inlet Total Temperature K | Inlet Total Pressure – atm | Fuel-Air Ratio Metered (M) | Fuel-Air Ratio Carbon Balance (CB) | Fuel-Air (CB) / Fuel-Air (M) | Ideal Combustor Exit Temperature K | Maximum Combustor Exit Temperature K | Pattern Factor | Reference Velocity - m/s | $CO_2$ - % Volume | $O_2$ - % Volume | CO (EI) | THC (EI) | $NO_X$(EI) | Gas Sample Combustion Efficiency | Humidity (g $H_2O$/kg air) | SAE Smoke Number | Comments |
|---|---|---|---|---|---|---|---|---|---|---|---|---|---|---|---|---|---|---|---|---|---|---|---|---|
| 1 | 4.84 | 3.85 | 0.0472 | 0.0 | 0.0472 | 302. | 429. | 2.93 | 0.0122 | 0.0 | 0.0 | 902. | 1621. | 1.94 | 17.9 | 0.0 | 0.0 | 0.0 | 0.0 | 0.0 | 0.0 | 1.0 | | IDLE |
| 5 | 4.97 | 3.95 | 0.0495 | 0.0 | 0.0485 | 301. | 427. | 2.93 | 0.0123 | 0.0090 | 0.73 | 901. | 0. | 0.0 | 18.3 | 1.84 | 18.0 | 7.9 | 4.4 | 4.1 | 99.3 | 1.0 | | IDLE |
| 6 | 4.94 | 3.93 | 0.0612 | 0.0 | 0.0612 | 301. | 425. | 2.90 | 0.0156 | 0.0117 | 0.75 | 1015. | 0. | 0.0 | 18.3 | 2.31 | 17.1 | 56.6 | 4.4 | 4.9 | 98.2 | 1.0 | | IDLE |
| 7 | 5.04 | 4.02 | 0.0307 | 0.0 | 0.0307 | 301. | 427. | 2.91 | 0.0076 | 0.0029 | 0.38 | 732. | 0. | 0.0 | 18.8 | 0.54 | 20.2 | 198.5 | 0.0 | 1.0 | 95.4 | 1.0 | | IDLE |
| 15 | 9.95 | 7.90 | 0.0 | 0.0803 | 0.0803 | 300. | 599. | 6.89 | 0.0102 | 0.0120 | 1.18 | 980. | 0. | 0.0 | 21.9 | 2.34 | 17.4 | 58.5 | 30.5 | 6.6 | 95.1 | 1.3 | 4 SEC | APPR |
| 14 | 9.99 | 7.95 | 0.0 | 0.0561 | 0.0561 | 300. | 592. | 6.81 | 0.0071 | 0.0085 | 1.20 | 863. | 0. | 0.0 | 22.0 | 1.55 | 18.5 | 87.0 | 89.0 | 4.6 | 87.7 | 1.2 | 4 SEC | APPR |
| 131 | 9.93 | 7.90 | 0.0 | 0.0411 | 0.0411 | 300. | 590. | 6.89 | 0.0052 | 0.0060 | 1.15 | 794. | 0. | 0.0 | 21.5 | 0.99 | 19.3 | 138.9 | 165.0 | 3.2 | 77.7 | 1.3 | 4 SEC | APPR |
| 9 | 6.50 | 5.17 | 0.0532 | 0.0 | 0.0532 | 301. | 460. | 3.76 | 0.0103 | 0.0080 | 0.78 | 960. | 0. | 0.0 | 20.2 | 1.63 | 18.3 | 3.9 | 2.9 | 3.1 | 99.6 | 1.5 | UNBLED | IDLE |
| 17 | 9.93 | 7.90 | 0.0545 | 0.0551 | 0.1096 | 300. | 593. | 6.79 | 0.0139 | 0.0121 | 0.87 | 1101. | 0. | 0.0 | 21.9 | 2.23 | 17.2 | 96.0 | 83.2 | 3.9 | 88.1 | 1.7 | PRI/SEC | APPR |
| 16 | 10.13 | 8.05 | 0.0 | 0.0586 | 0.0586 | 302. | 590. | 6.79 | 0.0073 | 0.0078 | 1.07 | 869. | 0. | 0.0 | 22.3 | 0.64 | 20.0 | 82.9 | 694.3 | 1.1 | 17.8 | 1.5 | 11 SEC | APPR |
| 161 | 10.14 | 8.07 | 0.0 | 0.0751 | 0.0751 | 302. | 592. | 6.93 | 0.0093 | 0.0100 | 1.08 | 943. | 0. | 0.0 | 21.9 | 1.07 | 19.3 | 90.3 | 539.2 | 1.6 | 35.6 | 1.4 | 11 SEC | APPR |
| 18 | 10.08 | 8.02 | 0.0377 | 0.0 | 0.0377 | 301. | 590. | 6.73 | 0.0047 | 0.0118 | 2.51 | 775. | 0. | 0.0 | 22.4 | 1.22 | 18.9 | 122.5 | 517.8 | 1.2 | 37.3 | 1.3 | PRI/SEC | APPR |
| 181 | 10.09 | 8.03 | 0.0395 | 0.0705 | 0.1090 | 301. | 592. | 6.73 | 0.0136 | 0.0125 | 0.92 | 1091. | 0. | 0.0 | 22.5 | 0.98 | 19.5 | 81.6 | 697.0 | 1.0 | 17.5 | 1.5 | PRI/SEC | APPR |
| 19 | 8.71 | 6.93 | 0.0526 | 0.1019 | 0.1545 | 300. | 767. | 6.97 | 0.0273 | 0.0715 | 0.96 | 1516. | 0. | 0.0 | 24.4 | 4.32 | 13.8 | 17.3 | 2.1 | 11.2 | 99.4 | 1.3 | | SLTO |
| 20 | 8.60 | 6.85 | 0.0303 | 0.1259 | 0.1562 | 300. | 765. | 6.85 | 0.0728 | 0.0227 | 1.00 | 1530. | 0. | 0.0 | 24.3 | 4.45 | 13.5 | 47.8 | 11.3 | 12.8 | 97.6 | 1.3 | SN=2 | SLTO |
| 21 | 8.63 | 6.87 | 0.0210 | 0.1321 | 0.1531 | 300. | 772. | 6.85 | 0.0223 | 0.0230 | 1.03 | 1520. | 0. | 0.0 | 24.7 | 4.35 | 13.7 | 62.5 | 41.5 | 13.3 | 93.7 | 1.1 | SN=4 | SLTO |
| 22 | 8.66 | 6.89 | 0.0154 | 0.1405 | 0.1559 | 300. | 763. | 6.89 | 0.0226 | 0.0234 | 1.04 | 1523. | 0. | 0.0 | 24.3 | 4.51 | 13.3 | 49.9 | 26.4 | 14.6 | 95.8 | 1.1 | | SLTO |
| 23 | 8.63 | 6.87 | 0.0517 | 0.0852 | 0.1369 | 300. | 767. | 6.91 | 0.0199 | 0.0189 | 0.95 | 1445. | 0. | 0.0 | 24.2 | 3.77 | 14.6 | 26.9 | 5.7 | 10.4 | 98.7 | 1.1 | | SLTO |
| 221 | 8.56 | 6.81 | 0.0634 | 0.0896 | 0.1530 | 300. | 775. | 6.95 | 0.0275 | 0.0717 | 0.96 | 1529. | 0. | 0.0 | 24.1 | 4.34 | 13.7 | 19.8 | 2.1 | 13.2 | 99.3 | 1.3 | SN=3 | SLTO |
| 24 | 8.63 | 6.86 | 0.0522 | 0.0572 | 0.1094 | 301. | 773. | 6.80 | 0.0159 | 0.0 | 0.0 | 1327. | 1547. | 0.40 | 24.8 | 0.0 | 0.0 | 0.0 | 0.0 | 0.0 | 0.0 | 1.3 | T/C TRAV | SLTO |
| 24 | 8.60 | 6.84 | 0.0524 | 0.0565 | 0.1089 | 301. | 770. | 6.79 | 0.0159 | 0.0150 | 0.94 | 1323. | 0. | 0.0 | 24.7 | 2.92 | 16.0 | 73.8 | 9.6 | 7.5 | 97.2 | 1.5 | SN=5 | SLTO |
| 26 | 9.01 | 7.17 | 0.0543 | 0.0915 | 0.1458 | 301. | 745. | 6.80 | 0.0203 | 0.0197 | 0.97 | 1438. | 0. | 0.0 | 25.1 | 3.93 | 14.6 | 30.6 | 3.7 | 8.7 | 98.9 | 1.7 | | CLIMB |
| 28 | 9.05 | 7.20 | 0.0543 | 0.1041 | 0.1584 | 300. | 738. | 6.78 | 0.0220 | 0.0711 | 0.96 | 1483. | 0. | 0.0 | 25.0 | 4.21 | 14.0 | 25.0 | 3.0 | 9.6 | 99.1 | 1.6 | | CLIMB |
| 30 | 8.91 | 7.09 | 0.0544 | 0.0956 | 0.1500 | 300. | 714. | 6.84 | 0.0212 | 0.0197 | 0.93 | 1438. | 0. | 0.0 | 23.5 | 3.92 | 14.6 | 32.6 | 5.8 | 7.8 | 98.6 | 1.6 | | CRUISE |
| 31 | 9.03 | 7.19 | 0.0544 | 0.0594 | 0.1138 | 301. | 708. | 6.82 | 0.0158 | 0.0146 | 0.92 | 1266. | 0. | 0.0 | 23.7 | 2.70 | 16.5 | 81.9 | 80.6 | 5.3 | 88.8 | 1.7 | | CRUISE |
| 32 | 9.04 | 7.19 | 0.0544 | 0.1069 | 0.1613 | 300. | 702. | 6.78 | 0.0274 | 0.0716 | 0.96 | 1466. | 0. | 0.0 | 23.7 | 4.37 | 14.1 | 22.3 | 5.0 | 8.3 | 98.9 | 1.7 | | CRUISE |
| 12 | 10.04 | 7.99 | 0.0807 | 0.0 | 0.0807 | 299. | 589. | 6.76 | 0.0101 | 0.0070 | 0.69 | 969. | 0. | 0.0 | 22.2 | 1.43 | 18.8 | 1.5 | 0.6 | 8.4 | 99.9 | 1.0 | PRIM ONLY | APPR |
| 11 | 10.12 | 8.05 | 0.0561 | 0.0 | 0.0561 | 299. | 594. | 6.80 | 0.0070 | 0.0048 | 0.69 | 862. | 0. | 0.0 | 22.4 | 0.97 | 19.4 | 15.8 | 1.3 | 2.9 | 97.5 | 1.0 | PRIM ONLY | APPR |
| 8 | 4.81 | 3.82 | 0.0390 | 0.0 | 0.0390 | 300. | 430. | 2.94 | 0.0102 | 0.0074 | 0.73 | 829. | 0. | 0.0 | 17.7 | 1.50 | 18.7 | 11.3 | 11.7 | 2.7 | 98.4 | 0.9 | | IDLE |

ORIGINAL PAGE IS
OF POOR QUALITY

# TEST RESULTS FOR HYBRID COMBUSTOR CONFIGURATION H7

| Point Number | Airflow - Total kg/s | Airflow - Combustor kg/s | Fuel Flow - Pilot kg/s | Fuel Flow - Main kg/s | Fuel Flow - Total kg/s | Fuel Temperature K | Inlet Total Temperature K | Inlet Total Pressure – atm | Fuel-Air Ratio Metered (M) | Fuel-Air Ratio Carbon Balance (CB) | Fuel-Air (CB) / Fuel-Air (M) | Ideal Combustor Exit Temperature K | Maximum Combustor Exit Temperature K | Pattern Factor | Reference Velocity - m/s | $CO_2$ - % Volume | $O_2$ - % Volume | CO (EI) | THC (EI) | $NO_X$(EI) | Gas Sample Combustion Efficiency | Humidity (g $H_2O$/kg air) | SAE Smoke Number | Comments |
|---|---|---|---|---|---|---|---|---|---|---|---|---|---|---|---|---|---|---|---|---|---|---|---|---|
| 3 | 4.96 | 3.95 | 0.0490 | 0.0 | 0.0490 | 298. | 430. | 2.86 | 0.0124 | 0.0 | 0.0 | 910. | 1597. | 1.43 | 18.9 | 0.0 | 0.0 | 0.0 | 0.0 | 0.0 | 0.0 | 0.5 | T/C TRAV | IDLE |
| 4 | 4.90 | 3.89 | 0.0385 | 0.0 | 0.0385 | 300. | 429. | 2.91 | 0.0099 | 0.0079 | 0.80 | 818. | 0. | 0.0 | 18.3 | 1.60 | 18.4 | 25.0 | 3.5 | 1.6 | 99.0 | 1.6 | | IDLE |
| 3 | 4.94 | 3.92 | 0.0487 | 0.0 | 0.0487 | 300. | 431. | 2.93 | 0.0124 | 0.0081 | 0.65 | 910. | 0. | 0.0 | 18.4 | 1.62 | 18.2 | 42.6 | 4.1 | 3.6 | 98.5 | 0.9 | TRAVERSE | 1/2 |
| 6 | 8.67 | 6.90 | 0.0527 | 0.1020 | 0.1547 | 300. | 767. | 6.86 | 0.0224 | 0.0203 | 0.91 | 1520. | 0. | 0.0 | 24.5 | 4.06 | 14.2 | 34.2 | 1.1 | 11.0 | 99.5 | 1.1 | | SLTO |
| 71 | 9.05 | 7.21 | 0.0545 | 0.0928 | 0.1473 | 300. | 740. | 6.82 | 0.0204 | 0.0181 | 0.89 | 1438. | 0. | 0.0 | 25.0 | 3.62 | 15.0 | 30.5 | 4.2 | 10.1 | 98.8 | 1.1 | | CLIMB |
| 8 | 8.99 | 7.14 | 0.0544 | 0.0930 | 0.1474 | 300. | 703. | 6.71 | 0.0206 | 0.0183 | 0.89 | 1413. | 0. | 0.0 | 23.8 | 3.63 | 14.9 | 39.6 | 5.7 | 8.8 | 98.4 | 1.1 | | CRUISE |
| 5 | 10.04 | 7.99 | 0.1069 | 0.0 | 0.1069 | 300. | 595. | 6.77 | 0.0134 | 0.0094 | 0.70 | 1088. | 0. | 0.0 | 22.4 | 1.89 | 17.8 | 30.0 | 0.9 | 10.7 | 99.2 | 1.0 | PRT+4 SEC | APPR |

## TEST RESULTS FOR VORBIX COMBUSTOR
## CONFIGURATION S11

| Point Number | Airflow - Total kg/s | Airflow - Combustor kg/s | Fuel Flow - Pilot kg/s | Fuel Flow - Main kg/s | Fuel Flow - Total kg/s | Fuel Temperature K | Inlet Total Temperature K | Inlet Total Pressure – atm | Fuel-Air Ratio Metered (M) | Fuel-Air Ratio Carbon Balance (CB) | Fuel-Air (CB) / Fuel-Air (M) | Ideal Combustor Exit Temperature K | Maximum Combustor Exit Temperature K | Pattern Factor | Reference Velocity - m/s | $CO_2$ - % Volume | $O_2$ - % Volume | CO (EI) | THC (EI) | $NO_X$(EI) | Gas Sample Combustion Efficiency | Humidity (g $H_2O$/kg air) | SAE Smoke Number | Comments |
|---|---|---|---|---|---|---|---|---|---|---|---|---|---|---|---|---|---|---|---|---|---|---|---|---|
| 820 | 9.10 | 7.21 | 0.0369 | 0.0786 | 0.1175 | 289. | 765. | 6.85 | 0.0163 | 0.0 | 0.0 | 1331. | 1055. | 0.57 | 44.7 | 0.0 | 0.0 | 0.0 | 0.0 | 0.0 | 0.0 | 1.6 | T/C TRAV | SLTO |
| 51 | 5.10 | 4.10 | 0.0472 | 0.0 | 0.0472 | 289. | 420. | 2.94 | 0.0115 | 0.0 | 0.0 | 873. | 995. | 0.27 | 32.9 | 0.0 | 0.0 | 0.0 | 0.0 | 0.0 | 0.0 | 1.6 | T/C | IDLE |
| 51 | 5.09 | 4.05 | 0.0473 | 0.0 | 0.0473 | 289. | 425. | 2.94 | 0.0117 | 0.0116 | 1.01 | 876. | 0. | 0.0 | 32.4 | 2.57 | 17.1 | 35.3 | 1.5 | 4.0 | 99.0 | 1.6 | | IDLE |
| 820 | 9.06 | 7.16 | 0.0391 | 0.0788 | 0.1179 | 289. | 767. | 6.84 | 0.0164 | 0.0210 | 1.28 | 1336. | 0. | 0.0 | 44.7 | 4.23 | 14.5 | 6.8 | 2.3 | 6.8 | 99.6 | 1.6 | | SLTO |
| 919 | 9.04 | 7.17 | 0.0463 | 0.0916 | 0.1379 | 289. | 773. | 6.85 | 0.0192 | 0.0246 | 1.29 | 1428. | 0. | 0.0 | 44.9 | 4.98 | 13.9 | 5.3 | 0.2 | 10.3 | 99.9 | 1.6 | | SLTC |
| 1016 | 9.02 | 7.14 | 0.0515 | 0.1028 | 0.1543 | 289. | 771. | 6.77 | 0.0216 | 0.0302 | 1.40 | 1498. | 0. | 0.0 | 45.1 | 6.04 | 12.3 | 7.0 | 0.3 | 10.3 | 99.8 | 1.5 | | SLTO |
| 1124 | 9.12 | 7.22 | 0.0234 | 0.1333 | 0.1567 | 289. | 770. | 6.66 | 0.0217 | 0.0243 | 1.12 | 1501. | 0. | 0.0 | 44.9 | 4.86 | 12.3 | 11.2 | 5.0 | 9.9 | 99.2 | 1.5 | | SLTO |
| 1224 | 9.07 | 7.16 | 0.0236 | 0.1124 | 0.1362 | 290. | 767. | 6.72 | 0.0193 | 0.0236 | 1.19 | 1424. | 0. | 0.0 | 45.5 | 4.56 | 13.2 | 33.0 | 2.5 | 6.5 | 98.9 | 1.4 | | SLTO |
| 1225 | 9.03 | 7.15 | 0.0403 | 0.0976 | 0.1379 | 290. | 766. | 6.72 | 0.0193 | 0.0255 | 1.32 | 1426. | 0. | 0.0 | 45.4 | 5.13 | 13.2 | 7.4 | 0.1 | 4.5 | 99.8 | 1.4 | | SLTO |
| 1326 | 9.06 | 7.19 | 0.0339 | 0.1049 | 0.1388 | 290. | 772. | 6.78 | 0.0193 | 0.0255 | 1.32 | 1430. | 0. | 0.0 | 45.4 | 5.03 | 13.9 | 11.9 | 0.3 | 4.2 | 99.7 | 1.4 | SN=14 | SLTO |
| 1416 | 9.04 | 7.10 | 0.0299 | 0.1193 | 0.1492 | 290. | 737. | 6.75 | 0.0208 | 0.0258 | 1.24 | 1446. | 0. | 0.0 | 43.3 | 5.15 | 12.9 | 25.0 | 1.5 | 6.5 | 99.3 | 1.4 | | CLIMB |
| 62 | 5.10 | 4.05 | 0.0313 | 0.0 | 0.0313 | 289. | 428. | 2.89 | 0.0077 | 0.0077 | 1.00 | 736. | 0. | 0.0 | 33.2 | 1.59 | 18.5 | 117.1 | 68.2 | 1.1 | 87.1 | 1.6 | | IDLE |
| 1524 | 9.38 | 7.43 | 0.0299 | 0.1130 | 0.1467 | 288. | 705. | 6.80 | 0.0200 | 0.0272 | 1.36 | 1395. | 0. | 0.0 | 42.7 | 5.13 | 13.3 | 38.9 | 50.7 | 5.7 | 92.5 | 1.4 | | CRUISE |
| 1610 | 10.21 | 8.10 | 0.0774 | 0.0356 | 0.1130 | 289. | 590. | 6.72 | 0.0140 | 0.0164 | 1.17 | 1102. | 0. | 0.0 | 39.5 | 3.31 | 16.0 | 14.2 | 0.6 | 7.1 | 99.6 | 1.4 | | APPR |
| 1711 | 10.21 | 8.10 | 0.0602 | 0.0526 | 0.1128 | 289. | 591. | 6.66 | 0.0139 | 0.0164 | 1.18 | 1102. | 0. | 0.0 | 39.8 | 3.29 | 15.6 | 26.0 | 2.1 | 5.5 | 99.1 | 1.4 | | APPR |
| 183 | 5.19 | 4.10 | 0.0633 | 0.0 | 0.0633 | 291. | 438. | 2.81 | 0.0154 | 0.0164 | 1.06 | 1020. | 0. | 0.0 | 35.6 | 3.25 | 16.0 | 52.0 | 0.3 | 3.7 | 98.8 | 1.4 | | IDLE |

ORIGINAL PAGE IS
OF POOR QUALITY

# TEST RESULTS FOR VORBIX COMBUSTOR
# CONFIGURATION S12

| Point Number | Airflow - Total kg/s | Airflow - Combustor kg/s | Fuel Flow - Pilot kg/s | Fuel Flow - Main kg/s | Fuel Flow - Total kg/s | Fuel Temperature K | Inlet Total Temperature K | Inlet Total Pressure - atm | Fuel-Air Ratio Metered (M) | Fuel-Air Ratio Carbon Balance (CB) | Fuel-Air (CB) / Fuel-Air (M) | Ideal Combustor Exit Temperature K | Maximum Combustor Exit Temperature K | Pattern Factor | Reference Velocity - m/s | $CO_2$ - % Volume | $O_2$ - % Volume | CO (EI) | THC (EI) | $NO_X$(EI) | Gas Sample Combustion Efficiency | Humidity (g $H_2O$/kg air) | SAE Smoke Number | Comments |
|---|---|---|---|---|---|---|---|---|---|---|---|---|---|---|---|---|---|---|---|---|---|---|---|---|
| 818 | 9.00 | 7.12 | 0.0358 | 0.1210 | 0.1568 | 290. | 772. | 0.82 | 0.0220 | 0.0235 | 1.07 | 1512. | 0. | 0.0 | 44.0 | 4.56 | 13.2 | 63.0 | 1.7 | 9.7 | 98.3 | 1.5 |  | SLTO |
| 924 | 8.96 | 7.09 | 0.0369 | 0.0989 | 0.1358 | 290. | 774. | 0.78 | 0.0192 | 0.0207 | 1.08 | 1427. | 0. | 0.0 | 44.4 | 4.07 | 13.6 | 44.3 | 1.2 | 10.1 | 98.8 | 1.5 |  | SLTO |
| 1025 | 8.95 | 7.09 | 0.0354 | 0.0850 | 0.1204 | 291. | 774. | 0.78 | 0.0170 | 0.0188 | 1.11 | 1360. | 0. | 0.0 | 44.9 | 3.75 | 15.2 | 24.8 | 0.9 | 9.5 | 99.3 | 1.5 |  | SLTO |
| 144 | 10.44 | 8.26 | 0.1074 | 0.0 | 0.1074 | 292. | 591. | 0.81 | 0.0130 | 0.0128 | 0.98 | 1070. | 0. | 0.0 | 39.8 | 2.60 | 16.9 | 7.5 | 0.4 | 10.2 | 99.8 | 1.7 |  | APPR |
| 52 | 5.12 | 4.05 | 0.0478 | 0.0 | 0.0478 | 294. | 427. | 2.95 | 0.0118 | 0.0 | 0.0 | 884. | 1094. | 0.40 | 32.4 | 0.0 | 0.0 | 0.0 | 0.0 | 0.0 | 0.0 | 1.4 | T/C TRAV | IDLE |
| 1025 | 9.00 | 7.13 | 0.0349 | 0.0872 | 0.1221 | 292. | 771. | 0.77 | 0.0171 | 0.0 | 0.0 | 1361. | 1910. | 0.43 | 45.0 | 0.0 | 0.0 | 0.0 | 0.0 | 0.0 | 0.0 | 1.6 | T/C TRAV | SLTO |
| 12 | 8.95 | 7.07 | 0.0370 | 0.0 | 0.0370 | 295. | 770. | 0.80 | 0.0052 | 0.0 | 0.0 | 965. | 1023. | 0.30 | 44.3 | 0.0 | 0.0 | 0.0 | 0.0 | 0.0 | 0.0 | 1.6 | PRIM ONLY | SLTO |
| 12 | 8.97 | 7.11 | 0.0371 | 0.0 | 0.0371 | 296. | 768. | 0.76 | 0.0052 | 0.0052 | 1.00 | 963. | 0. | 0.0 | 44.8 | 1.06 | 20.2 | 0.8 | 0.6 | 10.4 | 99.9 | 1.7 | PRIM ONLY | SLTO |
| 52 | 5.02 | 3.97 | 0.0482 | 0.0 | 0.0482 | 294. | 427. | 2.92 | 0.0121 | 0.0111 | 0.92 | 890. | 0. | 0.0 | 32.1 | 2.23 | 17.5 | 56.0 | 1.9 | 3.6 | 98.9 | 1.5 |  | IDLE |
| 1018 | 8.98 | 7.11 | 0.0519 | 0.1061 | 0.1580 | 290. | 770. | 0.80 | 0.0222 | 0.0255 | 1.15 | 1516. | 0. | 0.0 | 44.3 | 5.05 | 12.9 | 31.9 | 0.8 | 12.0 | 99.2 | 1.6 |  | SLTO |
| 524 | 9.04 | 7.16 | 0.0256 | 0.1293 | 0.1549 | 290. | 772. | 0.76 | 0.0216 | 0.0246 | 1.14 | 1500. | 0. | 0.0 | 45.4 | 4.80 | 13.3 | 57.3 | 3.8 | 9.7 | 98.2 | 1.6 | SN=9 | SLTO |
| 625 | 9.04 | 7.16 | 0.0415 | 0.1151 | 0.1566 | 290. | 769. | 0.85 | 0.0219 | 0.0247 | 1.13 | 1505. | 0. | 0.0 | 44.6 | 4.87 | 12.6 | 39.2 | 1.1 | 10.7 | 99.0 | 1.6 |  | SLTO |
| 726 | 8.95 | 7.10 | 0.0330 | 0.1240 | 0.1570 | 296. | 769. | 0.79 | 0.0222 | 0.0240 | 1.11 | 1514. | 0. | 0.0 | 44.5 | 4.81 | 13.1 | 51.5 | 1.4 | 9.9 | 98.6 | 1.7 |  | SLTO |

# TEST RESULTS FOR VORBIX COMBUSTOR
# CONFIGURATION S13

| Point Number | Airflow - Total kg/s | Airflow - Combustor kg/s | Fuel Flow - Pilot kg/s | Fuel Flow - Main kg/s | Fuel Flow - Total kg/s | Fuel Temperature K | Inlet Total Temperature K | Inlet Total Pressure – atm | Fuel-Air Ratio Metered (M) | Fuel-Air Ratio Carbon Balance (CB) | Fuel-Air (CB) / Fuel-Air (M) | Ideal Combustor Exit Temperature K | Maximum Combustor Exit Temperature K | Pattern Factor | Reference Velocity - m/s | $CO_2$ - % Volume | $O_2$ - % Volume | CO (EI) | THC (EI) | $NO_x$(EI) | Gas Sample Combustion Efficiency | Humidity (g $H_2O$/kg air) | SAE Smoke Number | Comments |
|---|---|---|---|---|---|---|---|---|---|---|---|---|---|---|---|---|---|---|---|---|---|---|---|---|
| 1125 | 9.02 | 7.15 | 0.0360 | 0.0850 | 0.1210 | 292. | 700. | 0.81 | 0.0169 | 0.0164 | 0.97 | 1553. | 0. | 0.0 | 44.7 | 3.29 | 16.3 | 20.0 | 0.9 | 9.0 | 99.4 | 1.6 | 7 SEC | SLTO |
| 7227 | 8.92 | 7.00 | 0.0624 | 0.0933 | 0.1557 | 290. | 706. | 0.81 | 0.0221 | 0.0213 | 0.96 | 1504. | 0. | 0.0 | 44.0 | 4.27 | 14.6 | 19.4 | 0.5 | 13.9 | 99.5 | 1.7 | 7 SEC | SLTO |
| 1312 | 9.21 | 7.30 | 0.0441 | 0.0958 | 0.1399 | 291. | 740. | 0.74 | 0.0192 | 0.0186 | 0.97 | 1599. | 0. | 0.0 | 44.5 | 3.75 | 15.1 | 23.3 | 0.4 | 6.3 | 99.4 | 1.7 | 7 SEC SN=1 | CLIMB |
| 1125 | 8.99 | 7.11 | 0.0357 | 0.0849 | 0.1206 | 292. | 771. | 0.76 | 0.0170 | 0.0 | 0.0 | 1356. | 1755. | 0.66 | 44.9 | 0.0 | 0.0 | 0.0 | 0.0 | 0.0 | 0.0 | 1.6 | 7 SEC | SLTO |

# TEST RESULTS FOR VORBIX COMBUSTOR
# CONFIGURATION S14

| Point Number | Airflow - Total kg/s | Airflow - Combustor kg/s | Fuel Flow - Pilot kg/s | Fuel Flow - Main kg/s | Fuel Flow - Total kg/s | Fuel Temperature K | Inlet Total Temperature K | Inlet Total Pressure – atm | Fuel-Air Ratio Metered (M) | Fuel-Air Ratio Carbon Balance (CB) | Fuel-Air (CB) / Fuel-Air (M) | Ideal Combustor Exit Temperature K | Maximum Combustor Exit Temperature K | Pattern Factor | Reference Velocity - m/s | $CO_2$ - % Volume | $O_2$ - % Volume | CO (EI) | THC (EI) | $NO_X$(EI) | Gas Sample Combustion Efficiency | Humidity (g $H_2O$/kg air) | SAE Smoke Number | Comments |
|---|---|---|---|---|---|---|---|---|---|---|---|---|---|---|---|---|---|---|---|---|---|---|---|---|
| 118 | 8.95 | 7.09 | 0.0638 | 0.0944 | 0.1582 | 289. | 772. | 6.75 | 0.0223 | 0.0217 | 0.97 | 1520. | 0. | 0.0 | 45.0 | 4.35 | 13.6 | 15.0 | 0.4 | 16.5 | 99.6 | 1.6 | 7 SEC | SETU |
| 224 | 9.08 | 7.10 | 0.0410 | 0.1159 | 0.1575 | 289. | 768. | 6.81 | 0.0219 | 0.0211 | 0.96 | 1505. | 0. | 0.0 | 44.9 | 4.25 | 13.9 | 15.2 | 1.1 | 13.7 | 99.5 | 1.0 | 7 SEC | SETU |
| 325 | 8.92 | 7.07 | 0.0297 | 0.1281 | 0.1576 | 290. | 766. | 6.72 | 0.0223 | 0.0205 | 0.92 | 1518. | 0. | 0.0 | 44.8 | 4.05 | 13.8 | 47.6 | 2.8 | 12.5 | 98.6 | 1.6 | 7 SEC | SETU |

## TEST RESULTS FOR VORBIX COMBUSTOR CONFIGURATION S15

| Point Number | Airflow - Total kg/s | Airflow - Combustor kg/s | Fuel Flow - Pilot kg/s | Fuel Flow - Main kg/s | Fuel Flow - Total kg/s | Fuel Temperature K | Inlet Total Temperature K | Inlet Total Pressure — atm | Fuel-Air Ratio Metered (M) | Fuel-Air Ratio Carbon Balance (CB) | Fuel-Air (CB) / Fuel-Air (M) | Ideal Combustor Exit Temperature K | Maximum Combustor Exit Temperature K | Pattern Factor | Reference Velocity - m/s | $CO_2$ - % Volume | $O_2$ - % Volume | CO (EI) | THC (EI) | $NO_x$(EI) | Gas Sample Combustion Efficiency | Humidity (g $H_2O$/kg air) | SAE Smoke Number | Comments |
|---|---|---|---|---|---|---|---|---|---|---|---|---|---|---|---|---|---|---|---|---|---|---|---|---|
| 424 | 9.07 | 7.19 | 0.0416 | 0.1161 | 0.1577 | 296. | 775. | 6.82 | 0.0219 | 0.0261 | 1.19 | 1510. | 0. | 0.0 | 45.2 | 5.07 | 11.9 | 61.1 | 2.2 | 10.2 | 98.5 | 1.5 |  | SLTO |
| 525 | 9.02 | 7.17 | 0.0296 | 0.1285 | 0.1581 | 296. | 774. | 6.82 | 0.0220 | 0.0254 | 1.15 | 1515. | 0. | 0.0 | 45.1 | 4.90 | 11.5 | 71.9 | 3.9 | 8.7 | 97.9 | 1.5 |  | SLTO |

ORIGINAL PAGE I
OF POOR QUALIT

## TEST RESULTS FOR VORBIX COMBUSTOR
## CONFIGURATION S.8

| Point Number | Airflow - Total kg/s | Airflow - Combustor kg/s | Fuel Flow - Pilot kg/s | Fuel Flow - Main kg/s | Fuel Flow - Total kg/s | Fuel Temperature K | Inlet Total Temperature K | Inlet Total Pressure – atm | Fuel-Air Ratio Metered (M) | Fuel-Air Ratio Carbon Balance (CB) | Fuel-Air (CB) / Fuel-Air (M) | Ideal Combustor Exit Temperature K | Maximum Combustor Exit Temperature K | Pattern Factor | Reference Velocity - m/s | $CO_2$ - % Volume | $O_2$ - % Volume | CO (EI) | THC (EI) | $NO_X$(EI) | Gas Sample Combustion Efficiency | Humidity (g $H_2O$/kg air) | SAE Smoke Number | Comments |
|---|---|---|---|---|---|---|---|---|---|---|---|---|---|---|---|---|---|---|---|---|---|---|---|---|
| 21 | 5.20 | 4.12 | 0.0480 | 0.0 | 0.0480 | 297. | 430. | 2.96 | 0.0116 | 0.0 | 0.0 | 880. | 1021. | 0.30 | 33.1 | 0.0 | 0.0 | 0.0 | 0.0 | 0.0 | 0.0 | 1.4 | T/C TRAV | IDLE |
| 21 | 5.16 | 4.10 | 0.0489 | 0.0 | 0.0489 | 297. | 431. | 2.95 | 0.0119 | 0.0123 | 1.03 | 892. | 0. | 0.0 | 33.4 | 2.43 | 16.9 | 61.5 | 1.2 | 5.4 | 98.4 | 1.4 | | IDLE |
| 32 | 5.13 | 4.07 | 0.0307 | 0.0 | 0.0307 | 297. | 430. | 2.96 | 0.0075 | 0.0075 | 1.00 | 731. | . 0. | 0.0 | 32.7 | 1.49 | 18.0 | 51.1 | 8.8 | 5.2 | 97.8 | 1.4 | | IDLE |
| 43 | 5.21 | 4.13 | 0.0625 | 0.0 | 0.0625 | 295. | 429. | 2.92 | 0.0152 | 0.0156 | 1.03 | 1004. | 0. | 0.0 | 33.6 | 3.09 | 15.3 | 61.6 | 0.5 | 2.7 | 98.5 | 1.4 | | IDLE |
| 518 | 8.99 | 7.15 | 0.0538 | 0.1058 | 0.1596 | 290. | 772. | 6.74 | 0.0224 | 0.0253 | 1.13 | 1523. | 0. | 0.0 | 45.3 | 5.03 | 12.5 | 22.6 | 0.2 | 14.6 | 99.4 | 1.5 | | SLTO |
| 725 | 9.02 | 7.15 | 0.0371 | 0.1200 | 0.1571 | 290. | 770. | 6.68 | 0.0220 | 0.0250 | 1.14 | 1510. | 0. | 0.0 | 45.7 | 4.96 | 12.0 | 20.4 | 0.5 | 10.9 | 99.3 | 1.5 | | SLTO |
| 826 | 9.09 | 7.21 | 0.0700 | 0.0845 | 0.1545 | 289. | 767. | 6.66 | 0.0214 | 0.0241 | 1.13 | 1490. | 0. | 0.0 | 46.1 | 4.65 | 11.8 | 8.7 | 0.0 | 13.6 | 99.8 | 1.5 | | SLTO |
| 919 | 9.02 | 7.15 | 0.0472 | 0.0897 | 0.1369 | 290. | 770. | 6.83 | 0.0192 | 0.0218 | 1.14 | 1424. | 0. | 0.0 | 44.7 | 4.38 | 14.1 | 13.0 | 0.0 | 14.0 | 99.7 | 1.5 | | SLTO |
| 1024 | 9.07 | 7.16 | 0.0463 | 0.0701 | 0.1164 | 290. | 770. | 6.77 | 0.0162 | 0.0179 | 1.10 | 1333. | 0. | 0.0 | 45.3 | 3.79 | 15.2 | 10.6 | 0.3 | 12.1 | 99.7 | 1.5 | | SLTO |
| 1020 | 9.04 | 7.17 | 0.0404 | 0.0762 | 0.1166 | 290. | 770. | 6.73 | 0.0163 | 0.0 | 0.0 | 1334. | 1786. | 0.80 | 45.5 | 0.0 | 0.0 | 0.0 | 0.0 | 0.0 | 0.0 | 1.5 | | SLTO |

# TEST RESULTS FOR VORBIX COMBUSTOR
# CONFIGURATION S17

| Point Number | Airflow - Total kg/s | Airflow - Combustor kg/s | Fuel Flow - Pilot kg/s | Fuel Flow - Main kg/s | Fuel Flow - Total kg/s | Fuel Temperature K | Inlet Total Temperature K | Inlet Total Pressure – atm | Fuel-Air Ratio Metered (M) | Fuel-Air Ratio Carbon Balance (CB) | Fuel-Air (CB) / Fuel-Air (M) | Ideal Combustor Exit Temperature K | Maximum Combustor Exit Temperature K | Pattern Factor | Reference Velocity - m/s | $CO_2$ - % Volume | $O_2$ - % Volume | CO (EI) | THC (EI) | $NO_X$(EI) | Gas Sample Combustion Efficiency | Humidity (g $H_2O$/kg air) | SAE Smoke Number | Comments |
|---|---|---|---|---|---|---|---|---|---|---|---|---|---|---|---|---|---|---|---|---|---|---|---|---|
| 518 | 9.02 | 7.14 | 0.0534 | 0.1062 | 0.1596 | 290. | 772. | 0.84 | 0.0224 | 0.0247 | 1.10 | 1521. | 0. | 0.0 | 44.6 | 4.93 | 12.3 | 20.5 | 0.5 | 14.7 | 99.5 | 1.5 | | SLTO |
| 725 | 9.03 | 7.15 | 0.0387 | 0.1165 | 0.1552 | 290. | 768. | 0.81 | 0.0217 | 0.0234 | 1.08 | 1499. | 0. | 0.0 | 44.7 | 4.66 | 13.3 | 25.1 | 0.7 | 12.5 | 99.3 | 1.5 | | SLTO |
| 820 | 9.04 | 7.15 | 0.0702 | 0.0852 | 0.1554 | 291. | 768. | 0.83 | 0.0217 | 0.0236 | 1.10 | 1500. | 0. | 0.0 | 44.5 | 4.77 | 13.6 | 11.9 | 0.2 | 15.7 | 99.7 | 1.5 | | SLTO |
| 624 | 9.03 | 7.17 | 0.0154 | 0.1422 | 0.1576 | 291. | 768. | 0.82 | 0.0220 | 0.0231 | 1.05 | 1506. | 0. | 0.0 | 44.7 | 4.43 | 13.9 | 82.7 | 10.9 | 8.1 | 96.8 | 1.5 | | SLTO |
| 624 | 9.02 | 7.17 | 0.0302 | 0.1273 | 0.1575 | 291. | 769. | 0.75 | 0.0220 | 0.0236 | 1.07 | 1506. | 0. | 0.0 | 45.3 | 4.68 | 13.5 | 35.1 | 1.1 | 11.3 | 99.1 | 1.6 | | SLTO |
| 21 | 5.07 | 4.02 | 0.0490 | 0.0 | 0.0490 | 290. | 453. | 3.35 | 0.0122 | 0.0 | 0.0 | 903. | 1047. | 0.31 | 26.4 | 0.0 | 0.0 | 0.0 | 0.0 | 0.0 | 0.0 | 1.5 | T/L TRAV | IDLE |
| 21 | 4.94 | 3.90 | 0.0492 | 0.0 | 0.0492 | 294. | 433. | 2.93 | 0.0126 | 0.0131 | 1.04 | 918. | 0. | 0.0 | 31.9 | 2.60 | 16.7 | 55.6 | 1.3 | 3.0 | 98.6 | 1.5 | | IDLE |
| 32 | 5.00 | 3.90 | 0.0312 | 0.0 | 0.0312 | 294. | 432. | 2.99 | 0.0079 | 0.0081 | 1.03 | 745. | 0. | 0.0 | 31.5 | 1.61 | 17.9 | 46.2 | 0.0 | 3.1 | 98.2 | 1.5 | | IDLE |
| 43 | 4.93 | 3.90 | 0.0627 | 0.0 | 0.0627 | 293. | 433. | 2.98 | 0.0161 | 0.0170 | 1.06 | 1039. | 0. | 0.0 | 31.2 | 3.36 | 15.6 | 49.6 | 0.6 | 2.6 | 98.6 | 1.5 | | IDLE |
| 8 | 10.57 | 8.30 | 0.1135 | 0.0 | 0.1135 | 291. | 592. | 0.76 | 0.0136 | 0.0132 | 0.97 | 1091. | 0. | 0.0 | 40.7 | 2.67 | 10.7 | 15.7 | 0.4 | 4.7 | 99.6 | 1.6 | | APPR |
| 9 | 9.03 | 7.16 | 0.1554 | 0.0 | 0.1554 | 289. | 767. | 0.76 | 0.0217 | 0.0236 | 1.06 | 1449. | 0. | 0.0 | 44.9 | 4.04 | 13.4 | 7.3 | 0.6 | 7.3 | 99.8 | 1.6 | FULL TRAV | SLTO |
| 911 | 9.05 | 7.16 | 0.1170 | 0.0 | 0.1170 | 289. | 769. | 0.74 | 0.0163 | 0.0164 | 1.01 | 1335. | 0. | 0.0 | 45.3 | 3.33 | 15.8 | 7.4 | 0.4 | 6.6 | 99.8 | 1.6 | FULL TRAV | SLTO |
| 12 | 9.43 | 7.47 | 0.1477 | 0.0 | 0.1477 | 291. | 737. | 0.72 | 0.0198 | 0.0195 | 0.98 | 1414. | 0. | 0.0 | 45.6 | 3.94 | 14.4 | 8.2 | 0.4 | 6.6 | 99.8 | 1.6 | FULL TRAV | CLIMB |

ORIGINAL PAGE IS
OF POOR QUALITY

## TEST RESULTS FOR VORBIX COMBUSTOR CONFIGURATION S18

| Point Number | Airflow - Total kg/s | Airflow - Combustor kg/s | Fuel Flow - Pilot kg/s | Fuel Flow - Main kg/s | Fuel Flow - Total kg/s | Fuel Temperature K | Inlet Total Temperature K | Inlet Total Pressure – atm | Fuel-Air Ratio Metered (M) | Fuel-Air Ratio Carbon Balance (CB) | Fuel-Air (CB) / Fuel-Air (M) | Ideal Combustor Exit Temperature K | Maximum Combustor Exit Temperature K | Pattern Factor | Reference Velocity - m/s | $CO_2$ - % Volume | $O_2$ - % Volume | CO (EI) | THC (EI) | $NO_X$(EI) | Gas Sample Combustion Efficiency | Humidity (g $H_2O$/kg air) | SAE Smoke Number | Comments |
|---|---|---|---|---|---|---|---|---|---|---|---|---|---|---|---|---|---|---|---|---|---|---|---|---|
| 24 | 5.09 | 4.05 | 0.0494 | 0.0 | 0.0494 | 301. | 424. | 2.91 | 0.0122 | 0.0 | 0.0 | 900. | 0. | 0.0 | 33.0 | 0.0 | 0.0 | 0.0 | 0.0 | 0.0 | 0.0 | 0.9 | POINT | NOISE |
| 23 | 5.06 | 4.04 | 0.0492 | 0.0 | 0.0492 | 300. | 430. | 2.89 | 0.0122 | 0.0 | 0.0 | 900. | 0. | 0.0 | 33.3 | 0.0 | 0.0 | 0.0 | 0.0 | 0.0 | 0.0 | 1.2 | POINT | NOISE |
| 22 | 5.12 | 4.08 | 0.0492 | 0.0 | 0.0492 | 301. | 434. | 2.89 | 0.0121 | 0.0 | 0.0 | 900. | 0. | 0.0 | 34.0 | 0.0 | 0.0 | 0.0 | 0.0 | 0.0 | 0.0 | [illegible] | POINT | NOISE |
| 21 | 5.14 | 4.09 | 0.0493 | 0.0 | 0.0493 | 300. | 434. | 2.68 | 0.0121 | 0.0 | 0.0 | 900. | 0. | 0.0 | 34.2 | 0.0 | 0.0 | 0.0 | 0.0 | 0.0 | 0.0 | 0.8 | POINT | NOISE |
| 211 | 5.12 | 4.08 | 0.0493 | 0.0 | 0.0493 | 301. | 429. | 2.94 | 0.0121 | 0.0 | 0.0 | 890. | 0. | 0.0 | 32.9 | 0.0 | 0.0 | 0.0 | 0.0 | 0.0 | 0.0 | 0.9 | POINT | NOISE |
| 212 | 4.55 | 3.62 | 0.0492 | 0.0 | 0.0492 | 300. | 431. | 2.91 | 0.0136 | 0.0 | 0.0 | 951. | 0. | 0.0 | 29.5 | 0.0 | 0.0 | 0.0 | 0.0 | 0.0 | 0.0 | 0.9 | POINT | NOISE |
| 11 | 9.34 | 7.45 | 0.0226 | 0.1265 | 0.1491 | 300. | 739. | 0.82 | 0.0201 | 0.0259 | 1.29 | 1425. | 0. | 0.0 | 44.7 | 5.14 | 12.2 | 24.7 | 0.9 | 10.5 | 99.3 | 1.5 |  | CLIMB |
| 17 | 10.55 | 8.40 | 0.0679 | 0.0436 | 0.1115 | 300. | 594. | 0.83 | 0.0133 | 0.0161 | 1.21 | 1083. | 0. | 0.0 | 40.5 | 3.26 | 10.1 | 19.5 | 0.4 | 7.5 | 99.5 | 1.4 |  | APPR |
| 18 | 10.40 | 8.74 | 0.0447 | 0.0682 | 0.1129 | 300. | 595. | 0.83 | 0.0129 | 0.0 | 0.0 | 1073. | 1451. | 0.79 | 42.2 | 0.0 | 0.0 | 0.0 | 0.0 | 0.0 | 0.0 | 1.3 | T/C TRAV | APPR |
| 19 | 10.39 | 8.42 | 0.0224 | 0.0909 | 0.1133 | 300. | 595. | 0.88 | 0.0134 | 0.0166 | 1.25 | 1090. | 0. | 0.0 | 40.5 | 3.20 | 16.1 | 67.0 | 41.3 | 3.7 | 93.7 | 1.3 |  | APPR |
| 16 | 10.01 | 8.44 | 0.0903 | 0.0229 | 0.1132 | 300. | 593. | 0.94 | 0.0134 | 0.0155 | 1.16 | 1087. | 0. | 0.0 | 40.0 | 3.12 | 15.9 | 18.6 | 1.4 | 0.4 | 99.4 | 1.3 |  | APPR |
| 28 | 5.20 | 4.12 | 0.0479 | 0.0 | 0.0479 | 296. | 443. | 2.90 | 0.0116 | 0.0127 | 1.09 | 892. | 0. | 0.0 | 34.2 | 2.51 | 16.8 | 69.0 | 1.2 | 3.5 | 98.2 | 1.6 | #2 HH | IDLE |
| 28 | 5.16 | 4.10 | 0.0486 | 0.0 | 0.0488 | 296. | 431. | 2.95 | 0.0119 | 0.0 | 0.0 | 891. | 1018. | 0.26 | 33.2 | 0.0 | 0.0 | 0.0 | 0.0 | 0.0 | 0.0 | 1.6 | T/C TRAV | IDLE |
| 18 | 10.41 | 8.20 | 0.0453 | 0.0682 | 0.1135 | 300. | 595. | 0.85 | 0.0137 | 0.0169 | 1.23 | 1098. | 0. | 0.0 | 39.9 | 3.40 | 16.0 | 15.6 | 1.9 | 7.5 | 99.2 | 1.4 |  | APPR |
| 4 | 5.06 | 4.01 | 0.0614 | 0.0 | 0.0614 | 299. | 434. | 2.92 | 0.0153 | 0.0175 | 1.14 | 1012. | 0. | 0.0 | 33.0 | 3.45 | 14.7 | 64.5 | 1.2 | 2.9 | 96.4 | 1.5 |  | IDLE |
| 2 | 5.08 | 4.05 | 0.0490 | 0.0 | 0.0490 | 299. | 427. | 2.93 | 0.0121 | 0.0138 | 1.14 | 895. | 0. | 0.0 | 32.6 | 2.71 | 15.2 | 70.4 | 1.1 | 5.2 | 98.2 | 1.4 |  | IDLE |
| 3 | 5.15 | 4.10 | 0.0284 | 0.0 | 0.0284 | 299. | 424. | 2.95 | 0.0069 | 0.0086 | 1.25 | 700. | 0. | 0.0 | 33.0 | 1.71 | 10.4 | 48.5 | 1.7 | 4.[illegible] | 98.7 | 1.4 |  | IDLE |
| 5 | 9.15 | 7.28 | 0.0363 | 0.0615 | 0.1198 | 298. | 770. | 0.79 | 0.0165 | 0.0 | 0.0 | 1340. | 1784. | 0.78 | 45.8 | 0.0 | 0.0 | 0.0 | 0.0 | 0.0 | 0.0 | 1.3 |  | SLTO |
| 5 | 9.19 | 7.32 | 0.0395 | 0.0827 | 0.1222 | 299. | 709. | 0.92 | 0.0163 | 0.0215 | 1.29 | 1340. | 0. | 0.0 | 45.1 | 4.34 | 13.9 | 6.0 | 0.1 | 14.4 | 99.9 | 1.3 | NOX EST | SLTO |
| 5 | 9.27 | 7.30 | 0.0395 | 0.0798 | 0.1193 | 296. | 705. | 0.93 | 0.0162 | 0.0212 | 1.31 | 1327. | 0. | 0.0 | 45.2 | 4.29 | 14.4 | 5.3 | 0.2 | 15.6 | 99.9 | 1.2 |  | SLTO |
| 6 | 9.09 | 7.23 | 0.0702 | 0.0871 | 0.1573 | 296. | 700. | 0.70 | 0.0217 | 0.0276 | 1.27 | 1499. | 0. | 0.0 | 45.5 | 5.54 | 12.3 | 8.2 | 0.1 | 14.9 | 99.8 | 1.2 |  | SLTO |
| 7 | 9.07 | 7.21 | 0.0529 | 0.1036 | 0.1565 | 298. | 700. | 0.91 | 0.0217 | 0.0277 | 1.28 | 1499. | 0. | 0.0 | 44.4 | 5.53 | 12.2 | 12.5 | 0.1 | 10.1 | 99.7 | 1.2 |  | SLTO |
| 8 | 9.15 | 7.24 | 0.0389 | 0.1179 | 0.1566 | 298. | 708. | 0.84 | 0.0215 | 0.0276 | 1.28 | 1494. | 0. | 0.0 | 45.4 | 5.49 | 11.5 | 22.7 | 0.3 | 10.1 | 99.4 | 1.2 |  | SLTO |
| 9 | 9.09 | 7.23 | 0.0302 | 0.1260 | 0.1562 | 298. | 708. | 0.80 | 0.0216 | 0.0280 | 1.30 | 1496. | 0. | 0.0 | 45.4 | 5.55 | 12.2 | 27.5 | 0.4 | 14.5 | 99.3 | 1.1 |  | SLTO |
| 10 | 9.10 | 7.24 | 0.0233 | 0.1343 | 0.1576 | 296. | 707. | 0.81 | 0.0218 | 0.0285 | 1.31 | 1500. | 0. | 0.0 | 45.2 | 5.63 | 12.0 | 34.9 | 0.8 | 12.7 | 99.1 | 1.2 |  | SLTO |
| 12 | 9.20 | 7.36 | 0.0511 | 0.0967 | 0.1478 | 296. | 704. | 0.80 | 0.0200 | 0.0251 | 1.25 | 1394. | 0. | 0.0 | 42.3 | 5.03 | 13.1 | 15.1 | 0.1 | 12.8 | 99.6 | 1.4 |  | CRUISE |
| 13 | 9.20 | 7.36 | 0.0435 | 0.1045 | 0.1480 | 298. | 708. | 0.81 | 0.0201 | 0.0254 | 1.26 | 1399. | 0. | 0.0 | 42.5 | 5.07 | 13.1 | 17.3 | 0.2 | 12.3 | 99.6 | 1.4 |  | CRUISE |
| 14 | 9.27 | 7.36 | 0.0367 | 0.1120 | 0.1487 | 298. | 703. | 0.81 | 0.0201 | 0.0267 | 1.33 | 1398. | 0. | 0.0 | 42.2 | 5.12 | 12.8 | 21.5 | 0.3 | 12.5 | 99.5 | 1.4 |  | CRUISE |

## TEST RESULTS FOR VORBIX COMBUSTOR CONFIGURATION S19

| Point Number | Airflow - Total kg/s | Airflow - Combustor kg/s | Fuel Flow - Pilot kg/s | Fuel Flow - Main kg/s | Fuel Flow - Total kg/s | Fuel Temperature K | Inlet Total Temperature K | Inlet Total Pressure – atm | Fuel-Air Ratio Metered (M) | Fuel-Air Ratio Carbon Balance (CB) | Fuel-Air (CB) / Fuel-Air (M) | Ideal Combustor Exit Temperature K | Maximum Combustor Exit Temperature K | Pattern Factor | Reference Velocity - m/s | $CO_2$ - % Volume | $O_2$ - % Volume | CO (EI) | THC (EI) | $NO_X$(EI) | Gas Sample Combustion Efficiency | Humidity (g $H_2O$/kg air) | SAE Smoke Number | Comments |
|---|---|---|---|---|---|---|---|---|---|---|---|---|---|---|---|---|---|---|---|---|---|---|---|---|
| 2 | 4.98 | 3.97 | 0.0489 | 0.0 | 0.0489 | 304. | 432. | 2.93 | 0.0123 | 0.0 | 0.0 | 908. | 1179. | 0.57 | 32.3 | 0.0 | 0.0 | 0.0 | 0.0 | 0.0 | 0.0 | 1.5 | T/C TRAV | IDLE |
| 2 | 5.01 | 3.98 | 0.0485 | 0.0 | 0.0485 | 304. | 432. | 2.97 | 0.0122 | 0.0136 | 1.11 | 902. | 0. | 0.0 | 32.0 | 2.09 | 16.4 | 55.8 | 0.2 | 3.2 | 98.7 | 1.6 | | IDLE |
| 3 | 4.91 | 3.90 | 0.0624 | 0.0 | 0.0624 | 305. | 429. | 2.97 | 0.0160 | 0.0176 | 1.10 | 1032. | 0. | 0.0 | 31.2 | 3.45 | 15.0 | 72.9 | 1.5 | 2.7 | 98.1 | 1.8 | | IDLE |
| 4 | 4.93 | 3.92 | 0.0302 | 0.0 | 0.0302 | 306. | 430. | 2.96 | 0.0077 | 0.0080 | 1.04 | 736. | 0. | 0.0 | 31.4 | 1.61 | 18.4 | 49.6 | 1.0 | 3.6 | 98.7 | 1.8 | | IDLE |
| 5 | 4.95 | 3.93 | 0.0227 | 0.0 | 0.0227 | 304. | 430. | 2.97 | 0.0058 | 0.0060 | 1.03 | 664. | 0. | 0.0 | 31.4 | 1.25 | 19.2 | 14.4 | 1.6 | 4.1 | 99.5 | 1.8 | TEST NOX | IDLE |
| 6 | 8.60 | 6.65 | 0.0332 | 0.1029 | 0.1361 | 305. | 766. | 6.67 | 0.0226 | 0.0276 | 1.21 | 1531. | 0. | 0.0 | 42.3 | 5.52 | 12.2 | 16.6 | 0.2 | 0.0 | 99.7 | 2.2 | NO NOX | SLTO |
| 11 | 4.93 | 3.92 | 0.0154 | 0.0 | 0.0154 | 307. | 430. | 2.93 | 0.0039 | 0.0042 | 1.08 | 592. | 0. | 0.0 | 31.8 | 0.86 | 19.8 | 9.6 | 2.0 | 3.9 | 99.5 | 1.9 | | IDLE |

ORIGINAL PAGE IS
OF POOR QUALITY

## TEST RESULTS FOR VORBIX COMBUSTOR CONFIGURATION S20

| Point Number | Airflow - Total kg/s | Airflow - Combustor kg/s | Fuel Flow - Pilot kg/s | Fuel Flow - Main kg/s | Fuel Flow - Total kg/s | Fuel Temperature K | Inlet Total Temperature K | Inlet Total Pressure – atm | Fuel-Air Ratio Metered (M) | Fuel-Air Ratio Carbon Balance (CB) | Fuel-Air (CB) / Fuel-Air (M) | Ideal Combustor Exit Temperature K | Maximum Combustor Exit Temperature K | Pattern Factor | Reference Velocity - m/s | $CO_2$ - % Volume | $O_2$ : % Volume | CO (EI) | THC (EI) | $NO_X$(EI) | Gas Sample Combustion Efficiency | Humidity (g $H_2O$/kg · air) | SAE Smoke Number | Comments |
|---|---|---|---|---|---|---|---|---|---|---|---|---|---|---|---|---|---|---|---|---|---|---|---|---|
| 2 | 4.90 | 3.89 | 0.0476 | 0.0 | 0.0476 | 300. | 430. | 2.95 | 0.0122 | 0.0 | 0.0 | 903. | 1090. | 0.40 | 31.4 | 0.0 | 0.0 | 0.0 | 0.0 | 0.0 | 0.0 | 2.1 | | IDLE |
| 2 | 4.88 | 3.88 | 0.0477 | 0.0 | 0.0477 | 300. | 427. | 2.94 | 0.0123 | 0.0094 | 0.76 | 903. | 0. | 0.0 | 30.9 | 1.88 | 17.7 | 45.6 | 6.2 | 3.5 | 98.2 | 2.2 | | IDLE |
| 3 | 4.95 | 3.93 | 0.0610 | 0.0 | 0.0610 | 305. | 427. | 2.95 | 0.0155 | 0.0122 | 0.79 | 1013. | 0. | 0.0 | 31.3 | 2.42 | 17.1 | 48.6 | 7.7 | 2.8 | 98.6 | 2.0 | | IDLE |
| 4 | 4.88 | 3.89 | 0.0305 | 0.0 | 0.0305 | 300. | 426. | 2.94 | 0.0078 | 0.0061 | 0.78 | 738. | 0. | 0.0 | 31.1 | 1.22 | 18.5 | 35.4 | 9.3 | 2.8 | 98.1 | 1.9 | | IDLE |
| 5 | 4.92 | 3.92 | 0.0230 | 0.0 | 0.0230 | 306. | 428. | 2.94 | 0.0054 | 0.0047 | 0.80 | 665. | 0. | 0.0 | 31.5 | 0.96 | 19.5 | 91.3 | 29.8 | 1.9 | 94.4 | 1.7 | | IDLE |
| 6 | 6.41 | 5.16 | 0.0527 | 0.0 | 0.0527 | 305. | 457. | 3.70 | 0.0103 | 0.0080 | 0.78 | 859. | 0. | 0.0 | 34.4 | 1.61 | 18.3 | 28.4 | 3.7 | 4.3 | 98.9 | 1.8 | UNBLED | IDLE |
| 7 | 5.13 | 4.09 | 0.0507 | 0.0 | 0.0507 | 305. | 395. | 2.90 | 0.0124 | 0.0101 | 0.81 | 877. | 0. | 0.0 | 30.1 | 1.90 | 17.7 | 51.9 | 13.7 | 3.4 | 97.2 | 2.1 | | IDLE |
| 8 | 4.43 | 3.52 | 0.0444 | 0.0 | 0.0444 | 305. | 509. | 2.91 | 0.0126 | 0.0101 | 0.80 | 984. | 0. | 0.0 | 33.9 | 2.03 | 17.8 | 31.6 | 2.7 | 5.1 | 98.9 | 2.2 | | IDLE |
| 81 | 4.45 | 3.53 | 0.0444 | 0.0 | 0.0444 | 305. | 509. | 2.96 | 0.0126 | 0.0097 | 0.77 | 984. | 0. | 0.0 | 33.5 | 1.96 | 17.8 | 31.8 | 2.9 | 5.3 | 98.9 | 2.3 | | IDLE |
| 10 | 10.07 | 8.01 | 0.0840 | 0.0284 | 0.1124 | 305. | 594. | 6.80 | 0.0140 | 0.0115 | 0.82 | 1100. | 0. | 0.0 | 38.7 | 2.34 | 17.4 | 9.9 | 0.4 | 9.6 | 99.7 | 2.7 | | APPR |
| 11 | 10.11 | 8.06 | 0.0555 | 0.0567 | 0.1122 | 305. | 592. | 6.82 | 0.0139 | 0.0116 | 0.83 | 1101. | 0. | 0.0 | 38.8 | 2.35 | 17.3 | 19.5 | 2.7 | 5.9 | 99.2 | 2.6 | | APPR |
| 11 | 10.11 | 8.05 | 0.0555 | 0.0568 | 0.1123 | 305. | 592. | 6.82 | 0.0139 | 0.0 | 0.0 | 1103. | 1273. | 0.33 | 38.7 | 0.0 | 0.0 | 0.0 | 0.0 | 0.0 | 0.0 | 2.7 | T/C TRAV | APPR |
| 12 | 10.10 | 8.05 | 0.0498 | 0.0300 | 0.0798 | 305. | 592. | 6.78 | 0.0099 | 0.0080 | 0.81 | 904. | 0. | 0.0 | 38.9 | 1.62 | 18.3 | 24.8 | 5.0 | 5.1 | 98.8 | 2.4 | | APPR |
| 13 | 10.18 | 8.09 | 0.0501 | 0.0459 | 0.0960 | 305. | 593. | 6.82 | 0.0119 | 0.0097 | 0.82 | 1034. | 0. | 0.0 | 38.9 | 1.90 | 17.3 | 25.2 | 5.0 | 5.2 | 98.8 | 2.3 | | APPR |
| 14 | 10.14 | 8.07 | 0.0502 | 0.0778 | 0.1280 | 304. | 594. | 6.80 | 0.0159 | 0.0131 | 0.82 | 1168. | 0. | 0.0 | 39.0 | 2.64 | 16.8 | 25.4 | 3.2 | 5.3 | 99.0 | 2.2 | | APPR |
| 15 | 8.57 | 6.82 | 0.0523 | 0.1041 | 0.1564 | 306. | 774. | 6.95 | 0.0229 | 0.0267 | 1.17 | 1539. | 0. | 0.0 | 41.8 | 5.36 | 12.3 | 16.3 | 0.1 | 12.7 | 99.6 | 2.3 | SN=3 | SLTO |
| 16 | 8.65 | 6.86 | 0.0306 | 0.1194 | 0.1500 | 306. | 769. | 6.84 | 0.0216 | 0.0278 | 1.28 | 1501. | 0. | 0.0 | 42.7 | 5.49 | 12.1 | 30.8 | 0.4 | 9.6 | 99.2 | 2.0 | SN=4 | SLTO |
| 17 | 8.67 | 6.90 | 0.0227 | 0.1244 | 0.1471 | 306. | 766. | 6.85 | 0.0213 | 0.0271 | 1.27 | 1484. | 0. | 0.0 | 42.6 | 5.31 | 12.5 | 45.0 | 1.9 | 8.8 | 98.8 | 2.0 | SN=2 | SLTO |
| 18 | 8.59 | 6.83 | 0.0153 | 0.1272 | 0.1425 | 306. | 771. | 6.65 | 0.0209 | 0.0271 | 1.30 | 1475. | 0. | 0.0 | 42.6 | 5.22 | 12.6 | 63.7 | 12.4 | 8.3 | 97.1 | 3.0 | SN=4 | SLTO |
| 19 | 8.62 | 6.86 | 0.0310 | 0.0930 | 0.1240 | 307. | 768. | 6.67 | 0.0181 | 0.0237 | 1.31 | 1388. | 0. | 0.0 | 42.4 | 4.76 | 13.5 | 15.6 | 0.1 | 9.4 | 99.6 | 2.9 | SN=1 | SLTO |
| 20 | 8.68 | 6.91 | 0.0307 | 0.0786 | 0.1093 | 307. | 768. | 6.63 | 0.0158 | 0.0185 | 1.17 | 1318. | 0. | 0.0 | 42.9 | 3.75 | 14.8 | 9.8 | 0.3 | 8.5 | 99.7 | 2.7 | SN=1 | SLTO |
| 20 | 8.71 | 6.93 | 0.0307 | 0.0783 | 0.1090 | 307. | 766. | 6.62 | 0.0157 | 0.0 | 0.0 | 1314. | 1671. | 0.65 | 43.1 | 0.0 | 0.0 | 0.0 | 0.0 | 0.0 | 0.0 | 2.7 | T/C TRAV | SLTO |
| 21 | 8.64 | 6.88 | 0.0309 | 0.0786 | 0.1095 | 307. | 766. | 6.75 | 0.0159 | 0.0153 | 0.96 | 1320. | 0. | 0.0 | 43.4 | 3.08 | 16.2 | 19.8 | 1.1 | 8.1 | 99.4 | 2.6 | 7SEC SN=2 | SLTO |
| 22 | 9.47 | 7.53 | 0.0578 | 0.1122 | 0.1700 | 306. | 645. | 6.80 | 0.0226 | 0.0257 | 1.14 | 1423. | 0. | 0.0 | 39.5 | 5.13 | 12.6 | 16.3 | 0.0 | 7.0 | 99.6 | 2.3 | SN=3 | SLTO |
| 23 | 9.04 | 7.20 | 0.0551 | 0.1061 | 0.1612 | 306. | 701. | 6.90 | 0.0224 | 0.0261 | 1.17 | 1464. | 0. | 0.0 | 46.4 | 5.21 | 12.3 | 20.3 | 0.1 | 9.3 | 99.5 | 2.2 | SN=3 | SLTO |
| 31 | 4.89 | 3.89 | 0.0384 | 0.0 | 0.0384 | 305. | 428. | 2.93 | 0.0099 | 0.0078 | 0.79 | 815. | 0. | 0.0 | 31.3 | 1.39 | 18.3 | 30.3 | 0.8 | 3.8 | 98.5 | 1.9 | | IDLE |
| 24 | 10.75 | 8.57 | 0.0387 | 0.1545 | 0.1932 | 305. | 769. | 6.85 | 0.0226 | 0.0281 | 1.24 | 1525. | 0. | 0.0 | 54.2 | 5.51 | 12.1 | 38.9 | 0.7 | 8.1 | 99.0 | 1.9 | HIGH REF V | SLTO |
| 25 | 7.20 | 5.73 | 0.0259 | 0.1073 | 0.1332 | 306. | 767. | 6.70 | 0.0232 | 0.0283 | 1.22 | 1543. | 0. | 0.0 | 35.9 | 5.57 | 12.2 | 36.1 | 0.6 | 10.6 | 99.1 | 1.9 | LOW REF V | SLTO |
| 25 | 7.40 | 5.89 | 0.0258 | 0.1054 | 0.1312 | 306. | 768. | 6.80 | 0.0223 | 0.0276 | 1.24 | 1515. | 0. | 0.0 | 36.4 | 5.47 | 12.2 | 28.2 | 0.4 | 10.6 | 99.3 | 1.8 | LOW REF V | SLTO |
| 26 | 8.96 | 7.12 | 0.0544 | 0.0916 | 0.1460 | 306. | 738. | 6.76 | 0.0205 | 0.0240 | 1.20 | 1437. | 0. | 0.0 | 43.0 | 4.94 | 14.1 | 7.4 | 0.0 | 10.7 | 99.8 | 1.8 | | CLIMB |
| 27 | 8.94 | 7.11 | 0.0289 | 0.0851 | 0.1140 | 306. | 737. | 6.76 | 0.0160 | 0.0197 | 1.23 | 1298. | 0. | 0.0 | 42.7 | 3.96 | 14.6 | 12.9 | 0.7 | 7.4 | 99.6 | 1.9 | | CLIMB |
| 27 | 8.93 | 7.11 | 0.0289 | 0.0851 | 0.1140 | 306. | 737. | 6.78 | 0.0160 | 0.0 | 0.0 | 1298. | 1056. | 0.63 | 42.9 | 0.0 | 0.0 | 0.0 | 0.0 | 0.0 | 0.0 | 1.8 | T/C TRAV | CLIMB |
| 28 | 8.91 | 7.08 | 0.0290 | 0.1300 | 0.1590 | 306. | 737. | 6.82 | 0.0224 | 0.0278 | 1.24 | 1495. | 0. | 0.0 | 42.6 | 5.48 | 12.0 | 30.6 | 0.7 | 8.2 | 99.1 | 1.8 | | CLIMB |
| 29 | 8.98 | 7.15 | 0.0288 | 0.0718 | 0.1006 | 307. | 737. | 6.78 | 0.0141 | 0.0171 | 1.21 | 1234. | 0. | 0.0 | 42.7 | 3.45 | 14.6 | 15.2 | 1.1 | 6.9 | 99.5 | 1.7 | | CLIMB |
| 30 | 8.98 | 7.14 | 0.0585 | 0.0886 | 0.1471 | 306. | 708. | 6.78 | 0.0206 | 0.0246 | 1.19 | 1415. | 0. | 0.0 | 41.2 | 4.96 | 13.2 | 7.8 | 0.0 | 10.0 | 99.8 | 1.6 | | CRUISE |
| 311 | 9.02 | 7.18 | 0.0435 | 0.1047 | 0.1482 | 304. | 704. | 6.82 | 0.0206 | 0.0245 | 1.19 | 1413. | 0. | 0.0 | 41.0 | 4.91 | 12.4 | 15.9 | 0.2 | 8.1 | 99.6 | 2.0 | | CRUISE |
| 32 | 8.90 | 7.13 | 0.0289 | 0.1182 | 0.1471 | 304. | 705. | 6.81 | 0.0206 | 0.0252 | 1.22 | 1413. | 0. | 0.0 | 40.8 | 5.00 | 11.7 | 31.1 | 1.2 | 7.0 | 99.1 | 2.0 | | CRUISE |
| 33 | 9.03 | 7.18 | 0.0297 | 0.0702 | 0.0999 | 305. | 704. | 6.84 | 0.0139 | 0.0170 | 1.22 | 1200. | 0. | 0.0 | 40.9 | 3.43 | 16.4 | 18.6 | 2.0 | 6.3 | 99.3 | 2.1 | | CRUISE |
| 34 | 9.03 | 7.19 | 0.0321 | 0.0821 | 0.1142 | 305. | 705. | 6.78 | 0.0159 | 0.0194 | 1.22 | 1265. | 0. | 0.0 | 41.3 | 3.90 | 15.0 | 16.6 | 0.8 | 6.9 | 99.5 | 2.1 | T/C TRAV | CRUISE |
| 34 | 9.02 | 7.16 | 0.0322 | 0.0820 | 0.1142 | 305. | 704. | 6.79 | 0.0159 | 0.0 | 0.0 | 1264. | 1619. | 0.63 | 41.1 | 0.0 | 0.0 | 0.0 | 0.0 | 0.0 | 0.0 | 1.9 | | CRUISE |
| 35 | 9.00 | 7.17 | 0.0322 | 0.1296 | 0.1618 | 305. | 703. | 6.80 | 0.0226 | 0.0278 | 1.23 | 1470. | 0. | 0.0 | 40.9 | 5.46 | 12.2 | 41.2 | 1.0 | 7.4 | 98.9 | 2.1 | | CRUISE |
| 101 | 10.07 | 8.01 | 0.0833 | 0.0288 | 0.1121 | 306. | 591. | 6.83 | 0.0140 | 0.0143 | 1.02 | 1104. | 0. | 0.0 | 38.3 | 2.90 | 16.1 | 11.8 | 0.2 | 9.4 | 99.7 | 1.7 | | APPR 15 SEC |
| 111 | 10.06 | 7.90 | 0.0556 | 0.0568 | 0.1124 | 305. | 589. | 6.69 | 0.0141 | 0.0 | 0.0 | 1107. | 1363. | 0.49 | 38.8 | 0.0 | 0.0 | 0.0 | 0.0 | 0.0 | 0.0 | 1.2 | | APPR 15 SEC |
| 111 | 9.98 | 7.93 | 0.0557 | 0.0570 | 0.1127 | 305. | 590. | 6.75 | 0.0142 | 0.0150 | 1.06 | 1115. | 0. | 0.0 | 38.8 | 3.10 | 15.9 | 10.5 | 0.8 | 5.9 | 99.5 | 2.0 | | APPR 15 SEC |

## TEST RESULTS FOR VORBIX COMBUSTOR
## CONFIGURATION S21

| Point Number | Airflow - Total kg/s | Airflow - Combustor kg/s | Fuel Flow - Pilot kg/s | Fuel Flow - Main kg/s | Fuel Flow - Total kg/s | Fuel Temperature K | Inlet Total Temperature K | Inlet Total Pressure – atm | Fuel-Air Ratio Metered (M) | Fuel-Air Ratio Carbon Balance (CB) | Fuel-Air (CB) / Fuel-Air (M) | Ideal Combustor Exit Temperature K | Maximum Combustor Exit Temperature K | Pattern Factor | Reference Velocity - m/s | $CO_2$ - % Volume | $O_2$ - % Volume | CO (EI) | THC (EI) | $NO_X$(EI) | Gas Sample Combustion Efficiency | Humidity (g $H_2O$/kg air) | SAE Smoke Number | Comments |
|---|---|---|---|---|---|---|---|---|---|---|---|---|---|---|---|---|---|---|---|---|---|---|---|---|
| 3 | 4.92 | 3.90 | 0.0467 | 0.0 | 0.0467 | 296. | 430. | 2.93 | 0.0125 | 0.0 | 0.0 | 911. | 1100. | 0.39 | 31.6 | 0.0 | 0.0 | 0.0 | 0.0 | 0.0 | 0.0 | 0.0 | T/C TRAV | IDLE |
| 3 | 4.98 | 3.90 | 0.0467 | 0.0 | 0.0467 | 296. | 451. | 2.93 | 0.0123 | 0.0107 | 0.87 | 905. | 0. | 0.0 | 32.2 | 2.15 | 17.7 | 45.0 | 4.2 | 3.1 | 98.5 | 1.8 | | IDLE |
| 2 | 4.86 | 3.86 | 0.0633 | 0.0 | 0.0633 | 295. | 432. | 2.94 | 0.0164 | 0.0145 | 0.88 | 1046. | 0. | 0.0 | 31.3 | 2.96 | 16.4 | 35.9 | 0.8 | 3.2 | 99.1 | 1.8 | | IDLE |
| 4 | 4.89 | 3.89 | 0.0380 | 0.0 | 0.0380 | 296. | 432. | 2.94 | 0.0098 | 0.0063 | 0.65 | 815. | 0. | 0.0 | 31.5 | 1.06 | 18.5 | 73.5 | 40.1 | 2.4 | 93.6 | 1.7 | | IDLE |
| 41 | 4.94 | 3.93 | 0.0528 | 0.0 | 0.0528 | 295. | 429. | 2.94 | 0.0134 | 0.0124 | 0.93 | 944. | 0. | 0.0 | 31.7 | 2.48 | 17.1 | 36.7 | 1.1 | 3.2 | 99.0 | 1.7 | | IDLE |
| 5 | 6.17 | 4.89 | 0.0522 | 0.0 | 0.0522 | 296. | 400. | 3.62 | 0.0107 | 0.0094 | 0.88 | 873. | 0. | 0.0 | 34.4 | 1.89 | 18.1 | 30.4 | 1.8 | 3.6 | 99.1 | 1.7 | SMOKED | IDLE |
| 6 | 9.91 | 7.89 | 0.0805 | 0.0 | 0.0805 | 295. | 595. | 6.78 | 0.0102 | 0.0131 | 1.28 | 978. | 0. | 0.0 | 38.3 | 2.64 | 16.9 | 23.1 | 2.6 | 7.3 | 99.2 | 1.7 | | APPR |
| 7 | 9.99 | 7.95 | 0.0603 | 0.0521 | 0.1124 | 295. | 593. | 6.82 | 0.0141 | 0.0 | 0.0 | 1110. | 1544. | 0.45 | 38.3 | 0.0 | 0.0 | 0.0 | 0.0 | 0.0 | 0.0 | 1.8 | T/C TRAV | APPR |
| 7 | 9.99 | 7.94 | 0.0599 | 0.0531 | 0.1130 | 295. | 595. | 6.85 | 0.0142 | 0.0138 | 0.97 | 1115. | 0. | 0.0 | 38.2 | 2.77 | 16.7 | 24.5 | 3.5 | 5.6 | 99.0 | 1.9 | | APPR |
| 8 | 10.06 | 8.00 | 0.0466 | 0.0654 | 0.1120 | 296. | 593. | 6.79 | 0.0140 | 0.0131 | 0.94 | 1105. | 0. | 0.0 | 38.7 | 2.54 | 16.7 | 57.5 | 29.7 | 4.5 | 95.2 | 2.1 | | APPR |
| 9 | 9.97 | 7.94 | 0.0580 | 0.0232 | 0.0812 | 297. | 595. | 6.82 | 0.0102 | 0.0094 | 0.92 | 979. | 0. | 0.0 | 38.3 | 1.77 | 18.3 | 84.0 | 54.9 | 4.2 | 91.7 | 2.0 | | APPR |
| 91 | 10.04 | 7.98 | 0.0601 | 0.0203 | 0.0804 | 298. | 595. | 6.81 | 0.0101 | 0.0090 | 0.89 | 973. | 0. | 0.0 | 38.6 | 1.68 | 18.2 | 85.0 | 55.6 | 4.0 | 91.6 | 1.9 | | APPR |
| 10 | 10.08 | 8.03 | 0.0601 | 0.0367 | 0.0968 | 297. | 595. | 6.80 | 0.0121 | 0.0113 | 0.93 | 1041. | 0. | 0.0 | 40.1 | 2.20 | 17.4 | 58.1 | 30.7 | 5.0 | 95.1 | 1.9 | | APPR |
| 11 | 9.99 | 7.95 | 0.0595 | 0.0685 | 0.1280 | 297. | 596. | 6.82 | 0.0161 | 0.0155 | 0.96 | 1177. | 0. | 0.0 | 38.4 | 3.12 | 16.0 | 20.2 | 1.6 | 6.1 | 99.3 | 2.1 | | APPR |
| 12 | 8.71 | 6.93 | 0.0517 | 0.1025 | 0.1542 | 296. | 773. | 6.82 | 0.0223 | 0.0222 | 1.00 | 1519. | 0. | 0.0 | 43.3 | 4.68 | 13.2 | 12.3 | 0.4 | 14.1 | 99.7 | 2.3 | SN=1 | SLTO |
| 13 | 8.73 | 6.95 | 0.0268 | 0.1271 | 0.1539 | 297. | 774. | 6.82 | 0.0224 | 0.0215 | 0.96 | 1525. | 0. | 0.0 | 43.7 | 4.40 | 13.5 | 43.1 | 2.8 | 9.3 | 98.6 | 2.2 | | SLTO |
| 14 | 8.68 | 6.91 | 0.0214 | 0.1349 | 0.1563 | 297. | 769. | 6.73 | 0.0226 | 0.0205 | 0.91 | 1527. | 0. | 0.0 | 43.7 | 4.63 | 14.0 | 99.9 | 26.5 | 7.4 | 94.6 | 2.1 | PRI OUT | SLTO |
| 15 | 8.67 | 6.90 | 0.0476 | 0.1086 | 0.1566 | 298. | 768. | 6.78 | 0.0227 | 0.0271 | 1.19 | 1529. | 0. | 0.0 | 43.2 | 4.80 | 13.1 | 14.3 | 0.8 | 13.3 | 99.6 | 1.4 | | SLTO |

ORIGINAL PAGE IS
OF POOR QUALITY

# TEST RESULTS FOR VORBIX COMBUSTOR CONFIGURATION S22

| Point Number | Airflow - Total kg/s | Airflow - Combustor kg/s | Fuel Flow - Pilot kg/s | Fuel Flow - Main kg/s | Fuel Flow - Total kg/s | Fuel Temperature K | Inlet Total Temperature K | Inlet Total Pressure – atm | Fuel-Air Ratio Metered (M) | Fuel-Air Ratio Carbon Balance (CB) | Fuel-Air (CB) / Fuel-Air (M) | Ideal Combustor Exit Temperature K | Maximum Combustor Exit Temperature K | Pattern Factor | Reference Velocity - m/s | $CO_2$ - % Volume | $O_2$ - % Volume | CO (EI) | THC (EI) | $NO_x$(EI) | Gas Sample Combustion Efficiency | Humidity (g $H_2O$/kg air) | SAE Smoke Number | Comments |
|---|---|---|---|---|---|---|---|---|---|---|---|---|---|---|---|---|---|---|---|---|---|---|---|---|
| 41 | 4.03 | 3.64 | 0.0392 | 0.0 | 0.0392 | 296. | 424. | 2.44 | 0.0102 | 0.0084 | 0.82 | 824. | 0. | 0.0 | 30.9 | 1.07 | 18.2 | 55.3 | 4.9 | 3.1 | 98.1 | 2.2 | | IDLE |
| 5 | 6.42 | 5.11 | 0.0326 | 0.0 | 0.0326 | 297. | 466. | 3.70 | 0.0103 | 0.0083 | 0.81 | 859. | 0. | 0.0 | 34.7 | 1.07 | 18.3 | 41.0 | 2.7 | 4.0 | 98.7 | 2.4 | UNBLED | IDLE |
| 51 | 6.45 | 5.13 | 0.0400 | 0.0 | 0.0400 | 296. | 466. | 3.76 | 0.0076 | 0.0065 | 0.85 | 766. | 0. | 0.0 | 34.0 | 1.31 | 18.6 | 41.7 | 7.2 | 2.9 | 96.2 | 2.4 | UNBLED | IDLE |
| 52 | 6.40 | 5.13 | 0.0654 | 0.0 | 0.0654 | 296. | 459. | 3.82 | 0.0127 | 0.0101 | 0.80 | 945. | 0. | 0.0 | 34.1 | 2.03 | 17.6 | 42.3 | 1.5 | 4.2 | 98.8 | 2.4 | UNBLED | IDLE |
| 53 | 6.44 | 5.12 | 0.0600 | 0.0 | 0.0600 | 294. | 466. | 3.75 | 0.0106 | 0.0134 | 0.80 | 1085. | 0. | 0.0 | 34.7 | 2.66 | 16.0 | 39.8 | 0.6 | 3.6 | 99.0 | 2.5 | UNBLED | IDLE |
| 6 | 10.04 | 8.03 | 0.0751 | 0.0344 | 0.1095 | 293. | 592. | 6.66 | 0.0136 | 0.0137 | 1.01 | 1092. | 0. | 0.0 | 38.3 | 2.76 | 16.5 | 27.5 | 1.5 | 7.6 | 99.2 | 2.3 | | APPR |
| 7 | 10.14 | 8.07 | 0.0551 | 0.0506 | 0.1057 | 293. | 591. | 6. | 0.0130 | 0.0157 | 1.15 | 1089. | 0. | 0.0 | 38.4 | 3.14 | 15.4 | 26.6 | 2.1 | 5.0 | 99.1 | 2.4 | | APPR |
| 7 | 10.11 | 8.04 | 0.0530 | 0.0564 | 0.1094 | 292. | 596. | 6. | 0.0136 | 0.0 | 0.0 | 1090. | 1348. | 0.52 | 38.4 | 0.0 | 0.0 | 0.0 | 0.0 | 0.0 | 0.0 | 2.4 | T/C TRAV | APPR |
| 8 | 10.06 | 8.00 | 0.0366 | 0.0743 | 0.1109 | 292. | 593. | 6.64 | 0.0139 | 0.0166 | 1.21 | 1100. | 0. | 0.0 | 38.3 | 3.31 | 15.5 | 59.3 | 16.4 | 3.8 | 96.5 | 2.4 | | APPR |
| 10 | 10.17 | 8.10 | 0.0619 | 0.0635 | 0.1254 | 291. | 592. | 6.62 | 0.0155 | 0.0176 | 1.14 | 1153. | 0. | 0.0 | 38.8 | 3.54 | 15.2 | 18.6 | 0.3 | 5.7 | 99.5 | 2.3 | | APPR |
| 2 | 4.76 | 3.80 | 0.0625 | 0.0 | 0.0625 | 295. | 426. | 2.93 | 0.0164 | 0.0132 | 0.80 | 1045. | 0. | 0.0 | 30.5 | 2.62 | 16.5 | 51.6 | 1.5 | 3.6 | 98.6 | 0.8 | | IDLE |
| 3 | 4.78 | 3.80 | 0.0465 | 0.0 | 0.0465 | 297. | 427. | 2.93 | 0.0128 | 0.0 | 0.0 | 917. | 1143. | 0.46 | 30.4 | 0.0 | 0.0 | 0.0 | 0.0 | 0.0 | 0.0 | 2.0 | T/C TRAV | IDLE |
| 3 | 4.80 | 3.81 | 0.0465 | 0.0 | 0.0465 | 296. | 427. | 2.93 | 0.0127 | 0.0105 | 0.83 | 910. | 0. | 0.0 | 30.0 | 2.09 | 17.4 | 54.3 | 2.7 | 3.5 | 98.4 | 1.9 | | IDLE |
| 141 | 8.80 | 7.00 | 0.0145 | 0.1412 | 0.1557 | 291. | 766. | 6.82 | 0.0222 | 0.0296 | 1.33 | 1514. | 0. | 0.0 | 43.0 | 5.00 | 11.9 | 26.7 | 2.3 | 9.6 | 99.1 | 2.5 | | SLTO |
| 1511 | 8.74 | [illegible] | 0.0270 | 0.1100 | 0.1370 | 292. | 776. | 6.77 | 0.0196 | 0.0257 | 1.30 | 1441. | 0. | 0.0 | 43.0 | 5.11 | 12.9 | 26.8 | 0.9 | 9.4 | 98.7 | 2.6 | | SLTO |
| 11 | 8.64 | 6.92 | 0.0505 | 0.1020 | 0.1525 | 290. | [illegible] | 6.89 | 0.0221 | 0.0282 | 1.28 | 1511. | 0. | 0.0 | 42.7 | 5.00 | 12.1 | 3.7 | 0.1 | 12.0 | 99.9 | 2.4 | SN=1 | SLTO |
| 12 | 8.69 | 6.91 | 0.0360 | 0.1190 | 0.1550 | 290. | 774. | 6.81 | 0.0224 | 0.0287 | 1.28 | 1525. | 0. | 0.0 | 43.4 | 5.76 | 12.0 | 7.3 | 0.0 | 11.2 | 99.8 | 2.5 | SN=1 | SLTO |
| 13 | 8.68 | 6.90 | 0.0414 | 0.1137 | 0.1551 | 290. | 770. | 6.76 | 0.0225 | 0.0286 | 1.28 | 1523. | 0. | 0.0 | 43.5 | 5.77 | 12.0 | 5.9 | 0.0 | 11.5 | 99.9 | 2.6 | SN=1 | SLTO |
| 131 | 8.69 | 6.92 | 0.0292 | 0.1266 | 0.1558 | 291. | 767. | 6.82 | 0.0225 | 0.0290 | 1.29 | 1521. | 0. | 0.0 | 43.0 | 5.79 | 11.7 | 12.9 | 0.6 | 10.0 | 99.6 | 2.5 | | SLTO |
| 14 | 8.72 | 6.93 | 0.0212 | 0.1346 | 0.1558 | 291. | 769. | 6.76 | 0.0225 | 0.0290 | 1.29 | 1522. | 0. | 0.0 | 43.4 | 5.77 | 11.9 | 19.9 | 1.1 | 9.6 | 99.4 | 2.5 | SN=1 | SLTO |
| 21 | 4.80 | 3.00 | 0.0593 | 0.0 | 0.0593 | 294. | 426. | 2.93 | 0.0154 | 0.0116 | 0.77 | 1069. | 0. | 0.0 | 31.1 | 2.35 | 17.2 | 54.0 | 1.8 | 3.0 | 98.5 | 2.4 | | IDLE |
| 16 | 8.75 | 6.96 | 0.0135 | 0.0971 | 0.1106 | 293. | 766. | 6.82 | 0.0159 | 0.0217 | 1.36 | 1320. | 0. | 0.0 | 43.3 | 4.33 | 14.3 | 26.8 | 3.7 | 6.3 | 98.9 | 1.7 | | SLTO |
| 16 | 8.70 | 6.92 | 0.0130 | 0.0972 | 0.1102 | 293. | 773. | 6.60 | 0.0160 | 0.0 | 0.0 | 1325. | 1700. | 0.60 | 43.5 | 0.0 | 0.0 | 0.0 | 0.0 | 0.0 | 0.0 | 1.7 | T/C TRAV | SLTO |
| 15 | 8.71 | 6.94 | 0.0132 | 0.1251 | 0.1383 | 291. | 772. | 6.61 | 0.0199 | 0.0259 | 1.30 | 1449. | 0. | 0.0 | 43.5 | 5.13 | 12.9 | 20.1 | 3.5 | 6.0 | 99.0 | 1.5 | | SLTO |
| 151 | 8.75 | 6.95 | 0.0144 | 0.1244 | 0.1388 | 291. | 775. | 6.63 | 0.0200 | 0.0254 | 1.27 | 1453. | 0. | 0.0 | 43.6 | 5.02 | 13.0 | 30.3 | 3.5 | 9.1 | 98.9 | 1.6 | | SLTO |
| 153 | 8.67 | 6.89 | 0.0216 | 0.1166 | 0.1382 | 292. | 767. | 6.63 | 0.0200 | 0.0257 | 1.28 | 1448. | 0. | 0.0 | 42.7 | 5.14 | 13.0 | 17.2 | 1.1 | 9.2 | 99.5 | 1.7 | | SLTO |
| 211 | 4.67 | 3.00 | 0.0555 | 0.0 | 0.0555 | 294. | 427. | 2.93 | 0.0145 | 0.0 | 0.0 | 971. | 1560. | 0.75 | 31.1 | 0.0 | 0.0 | 0.0 | 0.0 | 0.0 | 0.0 | 2.6 | T/C TRAV | IDLE |
| 19 | 8.93 | 7.10 | 0.0148 | 0.1295 | 0.1443 | 293. | 740. | 6.74 | 0.0203 | 0.0261 | 1.29 | 1434. | 0. | 0.0 | 43.2 | 5.14 | 13.0 | 35.5 | 0.5 | 7.4 | 98.4 | 1.6 | SN=2 | CLIMB |
| 20 | 9.03 | 7.16 | 0.0149 | 0.0993 | 0.1142 | 293. | 734. | 6.70 | 0.0159 | 0.0213 | 1.34 | 1290. | 0. | 0.0 | 43.2 | 4.22 | 14.3 | 33.0 | 0.2 | 6.9 | 98.5 | 1.6 | | CLIMB |
| 20 | 8.99 | 7.15 | 0.0146 | 0.0998 | 0.1144 | 293. | 734. | 6.72 | 0.0160 | 0.0 | 0.0 | 1294. | 1665. | 0.60 | 43.3 | 0.0 | 0.0 | 0.0 | 0.0 | 0.0 | 0.0 | 1.6 | T/C TRAV | CLIMB |
| 201 | 9.00 | 7.17 | 0.0146 | 0.1450 | 0.1596 | 292. | 709. | 6.70 | 0.0223 | 0.0270 | 1.24 | 1467. | 0. | 0.0 | 41.5 | 5.37 | 12.4 | 50.2 | 6.2 | 6.5 | 97.9 | 1.6 | | CRUISE |
| 2111 | 9.03 | 7.16 | 0.0162 | 0.1430 | 0.1592 | 292. | 707. | 6.78 | 0.0222 | 0.0275 | 1.23 | 1463. | 0. | 0.0 | 41.4 | 5.31 | 12.4 | 47.5 | 14.2 | 6.6 | 97.3 | 1.6 | | CRUISE |
| 212 | 9.27 | 7.30 | 0.0195 | 0.1395 | 0.1590 | 293. | 702. | 6.91 | 0.0216 | 0.0281 | 1.30 | 1440. | 0. | 0.0 | 41.3 | 5.50 | 12.4 | 41.1 | 9.6 | 6.6 | 98.0 | 1.7 | SN=2 | CRUISE |
| 22 | 9.09 | 7.23 | 0.0195 | 0.1245 | 0.1440 | 293. | 706. | 6.82 | 0.0199 | 0.0253 | 1.27 | 1345. | 0. | 0.0 | 41.5 | 4.97 | 13.0 | 38.8 | 9.7 | 6.5 | 98.0 | 1.7 | | CRUISE |
| 23 | 9.00 | 7.17 | 0.0196 | 0.0953 | 0.1149 | 293. | 700. | 6.74 | 0.0160 | 0.0210 | 1.31 | 1265. | 0. | 0.0 | 41.1 | 4.14 | 14.3 | 37.2 | 4.1 | 6.1 | 98.1 | 1.6 | | CRUISE |
| 23 | 9.04 | 7.19 | 0.0196 | 0.0953 | 0.1149 | 293. | 760. | 6.73 | 0.0160 | 0.0 | 0.0 | 1264. | 1655. | 0.64 | 41.7 | 0.0 | 0.0 | 0.0 | 0.0 | 0.0 | 0.0 | 1.8 | | CRUISE |
| 231 | 8.99 | 7.15 | 0.0196 | 0.0 | 0.0196 | 293. | 704. | 6.60 | 0.0027 | 0.0 | 0.0 | 811. | 86[illegible]. | 0.47 | 40.9 | 0.0 | 0.0 | 0.0 | 0.0 | 0.0 | 0.0 | 1.9 | | CRUISE |
| 17 | 8.70 | 6.92 | 0.0136 | 0.0883 | 0.1019 | 293. | 768. | 6.74 | 0.0147 | 0.0262 | [illegible] | 1283. | 0. | 0.0 | 43.3 | 5.54 | 12.2 | 36.9 | 5.5 | 7.0 | 98.5 | 1.7 | | SLTO |
| 18 | 9.05 | 7.19 | 0.0150 | 0.1460 | 0.1610 | 293. | 733. | 6.76 | 0.0224 | 0.0262 | 0.90 | 1490. | 0. | 0.0 | 43.1 | 4.64 | 14.7 | 27.5 | 3.4 | 7.4 | 99.0 | 1.6 | | CLIMB |

## TEST RESULTS FOR VORBIX COMBUSTOR
## CONFIGURATION S23

| Point Number | Airflow - Total kg/s | Airflow - Combustor kg/s | Fuel Flow - Pilot kg/s | Fuel Flow - Main kg/s | Fuel Flow - Total kg/s | Fuel Temperature K | Inlet Total Temperature K | Inlet Total Pressure – atm | Fuel-Air Ratio Metered (M) | Fuel-Air Ratio Carbon Balance (CB) | Fuel-Air (CB) / Fuel-Air (M) | Ideal Combustor Exit Temperature K | Maximum Combustor Exit Temperature K | Pattern Factor | Reference Velocity - m/s | $CO_2$ - % Volume | $O_2$ - % Volume | CO (EI) | THC (EI) | $NO_X$(EI) | Gas Sample Combustion Efficiency | Humidity (g $H_2O$/kg air) | SAE Smoke Number | Comments |
|---|---|---|---|---|---|---|---|---|---|---|---|---|---|---|---|---|---|---|---|---|---|---|---|---|
| 3 | 4.90 | 3.93 | 0.0460 | 0.0 | 0.0460 | 290. | 426. | 2.94 | 0.0117 | 0.0 | 0.0 | 879. | 1082. | 0.45 | 31.7 | 0.0 | 0.0 | 0.0 | 0.0 | 0.0 | 0.0 | 2.5 | I/C TRAV | IDLE |
| 21 | 4.98 | 3.96 | 0.0584 | 0.0 | 0.0584 | 289. | 434. | 2.97 | 0.0146 | 0.0125 | 0.84 | 990. | 0. | 0.0 | 31.8 | 2.49 | 17.2 | 39.9 | 0.7 | 3.8 | 99.0 | 3.0 | | IDLE |
| 32 | 4.94 | 3.92 | 0.0465 | 0.0 | 0.0465 | 290. | 430. | 2.94 | 0.0119 | 0.0099 | 0.83 | 866. | 0. | 0.0 | 31.7 | 1.99 | 17.8 | 34.9 | 1.1 | 3.8 | 99.1 | 3.1 | | IDLE |
| 23 | 4.87 | 3.87 | 0.0284 | 0.0 | 0.0284 | 290. | 427. | 2.89 | 0.0074 | 0.0064 | 0.86 | 720. | 0. | 0.0 | 31.5 | 1.24 | 19.1 | 71.0 | 24.3 | 2.1 | 95.5 | 2.8 | | IDLE |
| 8 | 10.00 | 7.90 | 0.0463 | 0.0636 | 0.1099 | 288. | 598. | 6.82 | 0.0138 | 0.0 | 0.0 | 1103. | 1284. | 0.30 | 36.6 | 0.0 | 0.0 | 0.0 | 0.0 | 0.0 | 0.0 | 2.6 | I/C TRAV | APPR |
| 24 | 6.47 | 5.14 | 0.0498 | 0.0 | 0.0498 | 289. | 460. | 5.74 | 0.0097 | 0.0087 | 0.90 | 837. | 0. | 0.0 | 35.3 | 1.74 | 18.2 | 37.0 | 2.3 | 4.2 | 98.9 | 2.7 | UNOLED | IDLE |
| 25 | 6.35 | 5.05 | 0.0378 | 0.0 | 0.0378 | 290. | 462. | 5.62 | 0.0075 | 0.0049 | 0.65 | 756. | 0. | 0.0 | 35.8 | 1.27 | 18.8 | 57.5 | 6.9 | 2.7 | 97.6 | 2.7 | UNOLED | IDLE |
| 225 | 4.43 | 3.90 | 0.0389 | 0.0 | 0.0389 | 290. | 427. | 2.84 | 0.0100 | 0.0064 | 0.64 | 816. | 0. | 0.0 | 31.0 | 1.67 | 18.3 | 54.5 | 3.2 | 3.3 | 98.4 | 2.7 | | IDLE |
| 26 | 6.47 | 5.15 | 0.0709 | 0.0 | 0.0709 | 286. | 456. | 5.72 | 0.0138 | 0.0123 | 0.89 | 980. | 0. | 0.0 | 35.2 | 2.47 | 17.4 | 35.5 | 0.7 | 4.2 | 99.1 | 2.7 | UNOLED | IDLE |
| 12 | 8.07 | 6.40 | 0.0230 | 0.0865 | 0.1095 | 288. | 709. | 6.84 | 0.0159 | 0.0 | 0.0 | 1320. | 1018. | 0.34 | 42.9 | 0.0 | 0.0 | 0.0 | 0.0 | 0.0 | 0.0 | 2.6 | I/C TRAV | SLTO |
| 27 | 10.01 | 7.97 | 0.0786 | 0.0344 | 0.1130 | 287. | 595. | 6.70 | 0.0142 | 0.0147 | 1.04 | 1111. | 0. | 0.0 | 38.9 | 2.98 | 16.9 | 17.8 | 0.6 | 6.9 | 99.5 | 2.9 | | APPR |
| 28 | 10.00 | 7.90 | 0.0561 | 0.0558 | 0.1119 | 287. | 595. | 6.74 | 0.0141 | 0.0157 | 1.11 | 1106. | 0. | 0.0 | 39.0 | 3.15 | 16.7 | 27.9 | 1.5 | 4.9 | 99.2 | 2.8 | | APPR |
| 29 | 9.42 | 7.89 | 0.0391 | 0.0727 | 0.1118 | 287. | 595. | 6.77 | 0.0142 | 0.0155 | 1.09 | 1113. | 0. | 0.0 | 38.4 | 3.05 | 16.6 | 52.5 | 0.6 | 4.2 | 97.9 | 2.9 | | APPR |
| 28 | 9.45 | 7.91 | 0.0554 | 0.0555 | 0.1109 | 287. | 596. | 6.76 | 0.0140 | 0.0 | 0.0 | 1107. | 1280. | 0.34 | 38.6 | 0.0 | 0.0 | 0.0 | 0.0 | 0.0 | 0.0 | 3.0 | I/C TRAV | APPR |
| 16 | 8.95 | 7.11 | 0.0241 | 0.0891 | 0.1132 | 288. | 741. | 6.70 | 0.0159 | 0.0 | 0.0 | 1295. | 1579. | 0.51 | 43.2 | 0.0 | 0.0 | 0.0 | 0.0 | 0.0 | 0.0 | 3.1 | I/C | CLIMB |
| 30 | 10.04 | 7.44 | 0.0550 | 0.0247 | 0.0797 | 287. | 594. | 6.84 | 0.0100 | 0.0099 | 0.99 | 966. | 0. | 0.0 | 38.4 | 1.99 | 18.2 | 37.7 | 3.0 | 5.0 | 98.8 | 3.0 | | APPR |
| 31 | 10.03 | 7.47 | 0.0541 | 0.0731 | 0.1272 | 288. | 594. | 6.70 | 0.0160 | 0.0172 | 1.07 | 1170. | 0. | 0.0 | 38.8 | 3.45 | 16.1 | 22.6 | 1.0 | 5.3 | 99.4 | 3.1 | | APPR |
| 32 | 8.00 | 6.84 | 0.0506 | 0.1035 | 0.1541 | 288. | 769. | 6.72 | 0.0225 | 0.0246 | 1.09 | 1521. | 0. | 0.0 | 43.3 | 4.95 | 13.9 | 3.9 | 0.4 | 11.7 | 99.9 | 3.1 | SN=1 | SLTO |
| 33 | 8.70 | 6.92 | 0.0362 | 0.1194 | 0.1556 | 288. | 770. | 6.74 | 0.0225 | 0.0262 | 1.16 | 1522. | 0. | 0.0 | 43.8 | 5.27 | 13.4 | 6.9 | 0.1 | 9.4 | 99.8 | 3.2 | SN=2 | SLTO |
| 34 | 8.65 | 6.86 | 0.0294 | 0.1273 | 0.1567 | 288. | 765. | 6.49 | 0.0226 | 0.0249 | 1.09 | 1520. | 0. | 0.0 | 45.0 | 5.00 | 14.0 | 11.0 | 0.1 | 8.9 | 99.7 | 3.1 | SN=2 | SLTO |
| 35 | 8.00 | 6.96 | 0.0215 | 0.1361 | 0.1576 | 288. | 771. | 6.75 | 0.0228 | 0.0245 | 1.07 | 1533. | 0. | 0.0 | 43.6 | 4.92 | 13.9 | 13.0 | 1.1 | 9.2 | 99.6 | 2.0 | SN=3 | SLTO |
| 351 | 8.05 | 6.88 | 0.0143 | 0.1443 | 0.1586 | 288. | 767. | 6.73 | 0.0231 | 0.0240 | 1.04 | 1538. | 0. | 0.0 | 43.4 | 4.74 | 14.2 | 33.0 | 3.3 | 5.9 | 98.8 | 1.9 | SN=2 | SLTO |
| 36 | 8.02 | 6.88 | 0.0243 | 0.1106 | 0.1349 | 288. | 770. | 6.74 | 0.0197 | 0.0220 | 1.12 | 1430. | 0. | 0.0 | 43.3 | 4.41 | 14.9 | 16.0 | 0.6 | 6.3 | 99.0 | 2.5 | | SLTO |
| 37 | 8.50 | 6.82 | 0.0245 | 0.0813 | 0.1058 | 289. | 773. | 6.79 | 0.0155 | 0.0182 | 1.17 | 1311. | 0. | 0.0 | 42.9 | 3.88 | 15.4 | 4.8 | 0.6 | 7.9 | 99.7 | 2.0 | | SLTO |
| 37 | 8.72 | 6.93 | 0.0245 | 0.0815 | 0.1060 | 289. | 767. | 6.78 | 0.0153 | 0.0 | 0.0 | 1299. | 1541. | 0.45 | 43.3 | 0.0 | 0.0 | 0.0 | 0.0 | 0.0 | 0.0 | 2.0 | I/C TRAV | SLTO |
| 38 | 8.04 | 6.87 | 0.0244 | 0.0672 | 0.0916 | 289. | 770. | 6.73 | 0.0133 | 0.0157 | 1.18 | 1239. | 0. | 0.0 | 43.5 | 3.27 | 16.4 | 17.8 | 0.9 | 7.3 | 99.5 | 2.0 | | CLIMB |
| 43 | 8.98 | 7.14 | 0.0278 | 0.1178 | 0.1456 | 288. | 746. | 6.70 | 0.0204 | 0.0235 | 1.15 | 1455. | 0. | 0.0 | 43.7 | 4.71 | 14.2 | 15.4 | 0.4 | 7.6 | 99.6 | 2.0 | SN=1 | CLIMB |
| 42 | 8.99 | 7.15 | 0.0276 | 0.1300 | 0.1576 | 286. | 735. | 6.64 | 0.0221 | 0.0255 | 1.15 | 1481. | 0. | 0.0 | 43.5 | 5.10 | 13.7 | 16.4 | 0.5 | 7.9 | 99.6 | 2.0 | | CLIMB |
| 44 | 8.91 | 7.04 | 0.0278 | 0.0852 | 0.1130 | 288. | 737. | 6.71 | 0.0159 | 0.0187 | 1.18 | 1293. | 0. | 0.0 | 43.1 | 3.77 | 15.6 | 13.0 | 0.6 | 7.0 | 99.6 | 2.0 | | CLIMB |
| 44 | 8.94 | 7.12 | 0.0278 | 0.0849 | 0.1127 | 289. | 737. | 6.69 | 0.0156 | 0.0 | 0.0 | 1290. | 1532. | 0.44 | 43.4 | 0.0 | 0.0 | 0.0 | 0.0 | 0.0 | 0.0 | 2.0 | I/C | CRUISE |
| 46 | 9.04 | 7.19 | 0.0264 | 0.1209 | 0.1473 | 288. | 710. | 6.75 | 0.0205 | 0.0240 | 1.17 | 1412. | 0. | 0.0 | 41.8 | 4.80 | 14.2 | 16.5 | 0.9 | 6.3 | 99.5 | 2.0 | SN=1 | CRUISE |
| 45 | 9.08 | 7.22 | 0.0283 | 0.1299 | 0.1582 | 288. | 710. | 6.74 | 0.0219 | 0.0254 | 1.16 | 1455. | 0. | 0.0 | 41.8 | 5.06 | 13.7 | 19.8 | 1.0 | 6.9 | 99.4 | 2.0 | | CRUISE |
| 47 | 9.08 | 7.22 | 0.0263 | 0.0863 | 0.1126 | 288. | 709. | 6.70 | 0.0156 | 0.0183 | 1.17 | 1258. | 0. | 0.0 | 42.0 | 3.08 | 15.7 | 20.2 | 1.2 | 5.4 | 99.4 | 2.0 | | CRUISE |
| 47 | 9.08 | 7.22 | 0.0284 | 0.0844 | 0.1128 | 288. | 706. | 6.75 | 0.0156 | 0.0 | 0.0 | 1256. | 1503. | 0.45 | 41.9 | 0.0 | 0.0 | 0.0 | 0.0 | 0.0 | 0.0 | 2.0 | I/C | SLTO |
| 385 | 10.44 | 8.29 | 0.0327 | 0.0985 | 0.1312 | 288. | 537. | 6.66 | 0.0158 | 0.0 | 0.0 | 1117. | 1374. | 0.44 | 30.9 | 0.0 | 0.0 | 0.0 | 0.0 | 0.0 | 0.0 | 2.0 | REDUCED T4 | SLTO |
| 39 | 10.47 | 8.32 | 0.0404 | 0.1469 | 0.1873 | 288. | 535. | 6.72 | 0.0225 | 0.0 | 0.0 | 1330. | 1730. | 0.51 | 30.7 | 0.0 | 0.0 | 0.0 | 0.0 | 0.0 | 0.0 | 2.0 | REDUCED T4 | SLTO |
| 40 | 10.48 | 8.33 | 0.0322 | 0.1556 | 0.1878 | 288. | 535. | 6.71 | 0.0226 | 0.0 | 0.0 | 1332. | 1722. | 0.49 | 30.8 | 0.0 | 0.0 | 0.0 | 0.0 | 0.0 | 0.0 | 2.0 | REDUCED T4 | SLTO |
| 41 | 10.45 | 8.31 | 0.0158 | 0.1703 | 0.1861 | 288. | 533. | 6.77 | 0.0224 | 0.0 | 0.0 | 1325. | 1656. | 0.42 | 30.2 | 0.0 | 0.0 | 0.0 | 0.0 | 0.0 | 0.0 | 2.5 | REDUCED T4 | SLTO |
| 371 | 8.08 | 6.91 | 0.0236 | 0.0824 | 0.1060 | 288. | 761. | 6.82 | 0.0153 | 0.0173 | 1.13 | 1300. | 0. | 0.0 | 42.9 | 3.20 | 16.2 | 79.8 | 38.0 | 6.7 | 93.7 | 2.5 | I/C TRAV | SLTO |

## TEST RESULTS FOR VORBIX COMBUSTOR CONFIGURATION S24

| Point Number | Airflow - Total kg/s | Airflow - Combustor kg/s | Fuel Flow - Pilot kg/s | Fuel Flow - Main kg/s | Fuel Flow - Total kg/s | Fuel Temperature K | Inlet Total Temperature K | Inlet Total Pressure – atm | Fuel-Air Ratio Metered (M) | Fuel-Air Ratio Carbon Balance (CB) | Fuel-Air (CB) / Fuel-Air (M) | Ideal Combustor Exit Temperature K | Maximum Combustor Exit Temperature K | Pattern Factor | Reference Velocity - m/s | $CO_2$ - % Volume | $O_2$ - % Volume | CO (EI) | THC (EI) | $NO_X$(EI) | Gas Sample Combustion Efficiency | Humidity (g $H_2O$/kg air) | SAE Smoke Number | Comments |
|---|---|---|---|---|---|---|---|---|---|---|---|---|---|---|---|---|---|---|---|---|---|---|---|---|
| 2 | 6.40 | 5.09 | 0.0717 | 0.0 | 0.0717 | 290. | 457. | 3.73 | 0.0141 | 0.0112 | 0.79 | 990. | 0. | 0.0 | 34.0 | 2.25 | 17.6 | 36.0 | 0.7 | 4.0 | 99.0 | 1.8 | UNSEED | IDLE |
| 3 | 6.34 | 5.03 | 0.0612 | 0.0 | 0.0612 | 289. | 458. | 3.71 | 0.0122 | 0.0095 | 0.78 | 924. | 0. | 0.0 | 34.4 | 1.91 | 16.2 | 35.2 | 1.1 | 4.4 | 99.1 | 1.7 | UNSEED | IDLE |
| 4 | 6.50 | 5.22 | 0.0550 | 0.0 | 0.0550 | 290. | 456. | 3.65 | 0.0103 | 0.0082 | 0.80 | 855. | 0. | 0.0 | 34.2 | 1.60 | 16.0 | 32.5 | 4.5 | 4.2 | 98.9 | 1.7 | UNSEED | IDLE |
| 4 | 6.43 | 5.44 | 0.0550 | 0.0 | 0.0556 | 290. | 456. | 3.70 | 0.0105 | 0.0 | 0.0 | 864. | 980. | 0.30 | 34.0 | 0.0 | 0.0 | 0.0 | 0.0 | 0.0 | 0.0 | 1.7 | T/C TRAV | IDLE |
| 5 | 6.32 | 5.02 | 0.0408 | 0.0 | 0.0408 | 291. | 458. | 3.64 | 0.0081 | 0.0062 | 0.77 | 776. | 0. | 0.0 | 34.5 | 1.24 | 19.2 | 45.8 | 10.5 | 2.6 | 97.8 | 1.7 | UNSEED | IDLE |
| 6 | 8.71 | 6.95 | 0.0365 | 0.1208 | 0.1573 | 286. | 777. | 6.95 | 0.0227 | 0.0243 | 1.07 | 1535. | 0. | 0.0 | 42.8 | 4.91 | 14.0 | 3.7 | 0.3 | 9.7 | 99.9 | 1.7 | SN=5 | SLTO |
| 7 | 8.57 | 6.82 | 0.0312 | 0.1279 | 0.1591 | 286. | 772. | 6.82 | 0.0233 | 0.0255 | 1.09 | 1550. | 0. | 0.0 | 42.6 | 5.09 | 13.6 | 8.6 | 0.5 | 9.6 | 99.8 | 1.7 | SN=5 | SLTO |
| 8 | 8.75 | 6.71 | 0.0254 | 0.1252 | 0.1504 | 287. | 766. | 6.85 | 0.0225 | 0.0242 | 1.08 | 1521. | 0. | 0.0 | 43.2 | 4.04 | 13.9 | 15.9 | 0.9 | 8.0 | 99.0 | 1.7 | SN=5 | SLTO |
| 9 | 8.50 | 6.82 | 0.0156 | 0.1407 | 0.1563 | 287. | 770. | 6.87 | 0.0229 | 0.0244 | 1.07 | 1530. | 0. | 0.0 | 42.4 | 4.00 | 13.6 | 22.3 | 5.0 | 9.0 | 99.1 | 1.7 | SN=3 | SLTO |
| 10 | 8.70 | 6.92 | 0.0208 | 0.0912 | 0.1120 | 288. | 770. | 6.82 | 0.0162 | 0.0 | 0.0 | 1331. | 1565. | 0.42 | 43.2 | 0.0 | 0.0 | 0.0 | 0.0 | 0.0 | 0.0 | 1.7 | T/C TRAV | SLTO |
| 11 | 8.68 | 6.90 | 0.0169 | 0.0924 | 0.1113 | 288. | 766. | 6.61 | 0.0161 | 0.0 | 0.0 | 1327. | 1570. | 0.45 | 43.0 | 0.0 | 0.0 | 0.0 | 0.0 | 0.0 | 0.0 | 1.7 | T/C TRAV | SLTO |
| 12 | 8.63 | 6.87 | 0.0229 | 0.1029 | 0.1256 | 282. | 774. | 6.81 | 0.0163 | 0.0 | 0.0 | 1461. | 1649. | 0.40 | 43.2 | 0.0 | 0.0 | 0.0 | 0.0 | 0.0 | 0.0 | 1.7 | T/C TRAV | SLTO |

# TEST RESULTS FOR VORBIX COMBUSTOR
## CONFIGURATION S25

| Point Number | Airflow · Total kg/s | Airflow · Combustor kg/s | Fuel Flow · Pilot kg/s | Fuel Flow · Main kg/s | Fuel Flow · Total kg/s | Fuel Temperature K | Inlet Total Temperature K | Inlet Total Pressure – atm | Fuel-Air Ratio Metered (M) | Fuel-Air Ratio Carbon Balance (CB) | Fuel-Air (CB)/Fuel-Air (M) | Ideal Combustor Exit Temperature K | Maximum Combustor Exit Temperature K | Pattern Factor | Reference Velocity · m/s | $CO_2$ · % Volume | $O_2$ · % Volume | CO (EI) | THC (EI) | $NO_X$(EI) | Gas Sample Combustion Efficiency | Humidity (g $H_2O$/kg air) | SAE Smoke Number | Comments |
|---|---|---|---|---|---|---|---|---|---|---|---|---|---|---|---|---|---|---|---|---|---|---|---|---|
| 1 | 4.89 | 3.89 | 0.0493 | 0.0 | 0.0493 | 291. | 429. | 2.89 | 0.0127 | 0.0 | 0.0 | 918. | 1129. | 0.43 | 31.8 | 0.0 | 0.0 | 0.0 | 0.0 | 0.0 | 0.0 | 1.8 | BLED TC TRAV | IDLE |
| 2 | 4.88 | 3.88 | 0.0597 | 0.0 | 0.0597 | 291. | 428. | 2.97 | 0.0154 | 0.0103 | 0.67 | 1012. | 0. | 0.0 | 31.3 | 2.06 | 17.5 | 46.9 | 0.3 | 3.2 | 98.9 | 2.2 | BLED | IDLE |
| 21 | 4.89 | 3.89 | 0.0629 | 0.0 | 0.0629 | 293. | 427. | 2.96 | 0.0162 | 0.0101 | 0.62 | 1039. | 0. | 0.0 | 30.9 | 2.01 | 17.7 | 50.5 | 0.2 | 3.3 | 98.8 | 1.8 | BLED | IDLE |
| 3 | 4.85 | 3.86 | 0.0492 | 0.0 | 0.0492 | 291. | 428. | 2.89 | 0.0127 | 0.0089 | 0.70 | 920. | 0. | 0.0 | 31.5 | 1.78 | 18.2 | 40.7 | 0.5 | 3.3 | 99.0 | 2.3 | BLED | IDLE |
| 31 | 4.88 | 3.88 | 0.0492 | 0.0 | 0.0492 | 293. | 429. | 2.95 | 0.0127 | 0.0081 | 0.64 | 918. | 0. | 0.0 | 31.1 | 1.63 | 18.3 | 40.4 | 0.3 | 3.3 | 99.0 | 2.0 | BLED | IDLE |
| 4 | 4.89 | 3.88 | 0.0316 | 0.0 | 0.0316 | 296. | 429. | 2.98 | 0.0081 | 0.0059 | 0.73 | 753. | 0. | 0.0 | 30.8 | 1.10 | 19.3 | 99.7 | 50.7 | 1.6 | 91.8 | 1.7 | BLED | IDLE |
| 41 | 4.89 | 3.88 | 0.0306 | 0.0 | 0.0306 | 291. | 430. | 2.91 | 0.0079 | 0.0 | 0.0 | 744. | 0. | 0.0 | 31.6 | 0.0 | 0.0 | 0.0 | 0.0 | 0.0 | 0.0 | 2.1 | BLED | IDLE |
| 42 | 4.88 | 3.87 | 0.0673 | 0.0 | 0.0673 | 294. | 426. | 2.65 | 0.0174 | 0.0051 | 0.29 | 1078. | 0. | 0.0 | 34.6 | 0.94 | 19.4 | 117.5 | 46.9 | 1.7 | 91.8 | 1.8 | BLED. | IDLE |
| 5 | 6.34 | 5.03 | 0.0652 | 0.0 | 0.0652 | 293. | 459. | 3.69 | 0.0179 | 0.0091 | 0.71 | 954. | 0. | 0.0 | 34.7 | 1.84 | 18.0 | 29.5 | 0.1 | 4.2 | 99.3 | 2.2 | UNBLED | IDLE |
| 51 | 6.38 | 5.07 | 0.0668 | 0.0 | 0.0668 | 292. | 458. | 3.77 | 0.0132 | 0.0076 | 0.58 | 961. | 0. | 0.0 | 34.1 | 1.54 | 18.5 | 29.8 | 0.2 | 4.3 | 99.3 | 2.1 | UNBLED | IDLE |
| 55 | 6.44 | 5.17 | 0.0595 | 0.0 | 0.0595 | 293. | 460. | 3.73 | 0.0116 | 0.0069 | 0.59 | 908. | 0. | 0.0 | 35.1 | 1.40 | 18.7 | 24.0 | 0.1 | 4.0 | 99.4 | 2.2 | UNBLED | IDLE |
| 6 | 6.35 | 5.05 | 0.0537 | 0.0 | 0.0537 | 293. | 458. | 3.76 | 0.0106 | 0.0074 | 0.70 | 871. | 0. | 0.0 | 34.0 | 1.50 | 18.7 | 17.7 | 0.6 | 3.8 | 99.5 | 2.2 | UNBLED | IDLE |
| 61 | 6.36 | 5.36 | 0.0537 | 0.0 | 0.0537 | 293. | 459. | 3.75 | 0.0106 | 0.0064 | 0.60 | 871. | 0. | 0.0 | 34.3 | 1.31 | 18.8 | 19.0 | 0.2 | 3.8 | 99.5 | 2.2 | UNBLED | IDLE |
| 65 | 6.43 | 5.11 | 0.0472 | 0.0 | 0.0472 | 294. | 460. | 3.73 | 0.0092 | 0.0059 | 0.64 | 822. | 0. | 0.0 | 34.9 | 1.20 | 19.0 | 20.5 | 1.2 | 3.0 | 99.4 | 2.2 | UNBLED | IDLE |
| 7 | 6.37 | 5.06 | 0.0410 | 0.0 | 0.0410 | 294. | 456. | 3.72 | 0.0081 | 0.0054 | 0.67 | 776. | 0. | 0.0 | 34.4 | 1.07 | 19.4 | 42.4 | 9.7 | 2.3 | 97.9 | 2.2 | UNBLED | IDLE |
| 71 | 6.39 | 5.08 | 0.0425 | 0.0 | 0.0425 | 294. | 459. | 3.76 | 0.0084 | 0.0050 | 0.60 | 789. | 0. | 0.0 | 34.4 | 0.99 | 19.4 | 45.0 | 7.8 | 2.5 | 99.1 | 2.0 | UNBLED | IDLE |
| 12 | 10.12 | 8.05 | 0.0614 | 0.0187 | 0.0801 | 292. | 593. | 6.84 | 0.0099 | 0.0075 | 0.76 | 968. | 0. | 0.0 | 38.6 | 1.51 | 18.3 | 33.9 | 2.8 | 5.1 | 98.9 | 2.1 |  | APPROACH |
| 8 | 10.10 | 8.04 | 0.0795 | 0.0325 | 0.1110 | 291. | 591. | 6.83 | 0.0138 | 0.0108 | 0.78 | 1099. | 0. | 0.0 | 38.5 | 2.19 | 17.4 | 27.2 | 0.9 | 7.1 | 99.3 | 2.1 |  | APPROACH |
| 9 | 10.24 | 8.15 | 0.0556 | 0.0557 | 0.1113 | 291. | 592. | 6.82 | 0.0137 | 0.0124 | 0.91 | 1094. | 0. | 0.0 | 39.2 | 2.49 | 16.9 | 38.6 | 2.4 | 4.6 | 99.8 | 2.0 |  | APPROACH |
| 10 | 10.09 | 8.03 | 0.0396 | 0.0727 | 0.1108 | 291. | 593. | 6.77 | 0.0138 | 0.0133 | 0.96 | 1101. | 0. | 0.0 | 39.0 | 2.59 | 16.6 | 64.6 | 16.9 | 3.3 | 96.5 | 1.9 |  | APPROACH |
| 11 | 10.10 | 8.03 | 0.0612 | 0.0658 | 0.1270 | 291. | 590. | 6.87 | 0.0158 | 0.0141 | 0.89 | 1165. | 0. | 0.0 | 38.5 | 2.83 | 16.3 | 31.7 | 1.6 | 5.0 | 99.1 | 2.1 |  | APPROACH |
| 14 | 8.65 | 6.88 | 0.0382 | 0.1157 | 0.1539 | 290. | 769. | 6.84 | 0.0224 | 0.0218 | 0.97 | 1521. | 0. | 0.0 | 42.8 | 4.41 | 13.9 | 4.3 | 0.1 | 0.0 | 99.9 | 2.1 | SN=2 | SLTO |
| 14 | 8.67 | 6.85 | 0.0301 | 0.1231 | 0.1532 | 291. | 773. | 6.82 | 0.0224 | 0.0212 | 0.95 | 1525. | 0. | 0.0 | 42.9 | 4.28 | 14.0 | 6.5 | 0.3 | 0.0 | 99.8 | 2.0 | SN=1 | SLTO |
| 15 | 8.62 | 6.85 | 0.0229 | 0.1309 | 0.1538 | 291. | 773. | 6.81 | 0.0225 | 0.0210 | 0.93 | 1528. | 0. | 0.0 | 42.9 | 4.25 | 14.2 | 7.7 | 0.5 | 7.6 | 99.8 | 2.0 | SN=7 | SLTO |
| 16 | 8.56 | 6.80 | 0.0153 | 0.1390 | 0.1543 | 291. | 772. | 6.80 | 0.0227 | 0.0210 | 0.93 | 1534. | 0. | 0.0 | 42.6 | 4.22 | 14.2 | 14.0 | 1.2 | 7.4 | 99.5 | 2.0 | SN=2 | SLTO |
| 13 | 8.62 | 6.86 | 0.0403 | 0.1156 | 0.1559 | 289. | 775. | 6.86 | 0.0227 | 0.0216 | 0.95 | 1537. | 0. | 0.0 | 42.9 | 4.37 | 14.2 | 4.3 | 0.1 | 8.9 | 99.9 | 2.0 |  | SLTO |
| 161 | 8.70 | 6.92 | 0.0091 | 0.1472 | 0.1563 | 289. | 772. | 6.81 | 0.0226 | 0.0207 | 0.92 | 1530. | 0. | 0.0 | 43.3 | 4.14 | 14.4 | 24.2 | 2.9 | 7.7 | 99.1 | 2.0 |  | SLTO |
| 17 | 8.64 | 6.88 | 0.0153 | 0.1205 | 0.1358 | 290. | 775. | 6.88 | 0.0197 | 0.0191 | 0.97 | 1448. | 0. | 0.0 | 42.9 | 3.84 | 15.1 | 17.7 | 1.7 | 7.4 | 99.4 | 2.0 |  | SLTO |
| 18 | 8.73 | 6.94 | 0.0154 | 0.0931 | 0.1085 | 291. | 770. | 6.87 | 0.0156 | 0.0 | 0.0 | 1315. | 1587. | 0.50 | 43.0 | 0.0 | 0.0 | 0.0 | 0.0 | 0.0 | 0.0 | 2.1 | TC TRAV | SLTO |
| 181 | 8.67 | 6.89 | 0.0154 | 0.0932 | 0.1086 | 291. | 773. | 5.89 | 0.0157 | 0.0160 | 1.02 | 1321. | 0. | 0.0 | 42.7 | 3.23 | 15.8 | 20.3 | 2.0 | 6.9 | 99.3 | 2.2 |  | SLTO |
| 19 | 8.61 | 6.84 | 0.0155 | 0.0796 | 0.0951 | 291. | 765. | 6.76 | 0.0139 | 0.0143 | 1.03 | 1255. | 0. | 0.0 | 42.8 | 2.89 | 16.3 | 24.2 | 2.3 | 6.7 | 99.2 | 2.1 |  | SLTO |
| 21 | 9.95 | 7.12 | 0.0161 | 0.1396 | 0.1557 | 290. | 738. | 6.74 | 0.0219 | 0.0 | 0.0 | 1481. | 1944. | 0.62 | 43.1 | 0.0 | 0.0 | 0.0 | 0.0 | 0.0 | 0.0 | 2.1 | TC TRAV | CLIMB |
| 22 | 8.97 | 7.09 | 0.0161 | 0.1287 | 0.1448 | 290. | 748. | 6.76 | 0.0204 | 0.0193 | 0.95 | 1445. | 0. | 0.0 | 43.4 | 3.86 | 14.8 | 24.1 | 2.5 | 6.2 | 98.7 | 2.1 | SN=7 | CLIMB |
| 23 | 8.93 | 7.11 | 0.0161 | 0.0963 | 0.1124 | 291. | 738. | 6.82 | 0.0158 | 0.0160 | 1.01 | 1294. | 0. | 0.0 | 42.6 | 3.22 | 15.9 | 26.2 | 3.0 | 6.1 | 99.0 | 2.1 |  | CLIMB |
| 24 | 8.97 | 7.13 | 0.0175 | 0.1390 | 0.1565 | 290. | 710. | 6.85 | 0.0219 | 0.0203 | 0.93 | 1460. | 0. | 0.0 | 40.8 | 4.03 | 14.5 | 30.3 | 9.4 | 5.5 | 98.7 | 2.1 |  | CRUISE |
| 25 | 9.02 | 7.17 | 0.0174 | 0.1286 | 0.1460 | 290. | 699. | 6.87 | 0.0203 | 0.0190 | 0.94 | 1402. | 0. | 0.0 | 40.3 | 3.78 | 14.8 | 30.1 | 4.7 | 5.6 | 98.8 | 2.3 | SN=4 | CRUISE |
| 26 | 9.10 | 7.24 | 0.0251 | 0.0956 | 0.1207 | 291. | 699. | 6.82 | 0.0167 | 0.0157 | 0.94 | 1286. | 0. | 0.0 | 41.0 | 3.14 | 16.0 | 34.3 | 5.8 | 5.2 | 99.5 | 2.1 |  | CRUISE |
| 20 | 8.68 | 6.91 | 0.0155 | 0.1194 | 0.1349 | 290. | 770. | 6.81 | 0.0195 | 0.0 | 0.0 | 1436. | 1838. | 0.60 | 43.2 | 0.0 | 0.0 | 0.0 | 0.0 | 0.0 | 0.0 | 2.1 | TC TRAV | SLTO |

# APPENDIX C

# FUEL CONTROL DESIGN STUDY

PRECEDING PAGE BLANK NOT FILMED

# APPENDIX C
# FUEL CONTROL DESIGN STUDY

## A. TECHNICAL DISCUSSION

### 1. FUEL CONTROL DESIGN MODIFIED FROM PRODUCTION CONTROL

#### a. Identification of Candidate Schemes

Utilization of the existing engine control (including fuel control), insofar as possible, will minimize development cost and impact on the engine installation. This approach confines changes to the addition of a new flow distribution control system to distribute fuel to the pilot and main zone manifolds. The flow distribution control system will replace the existing pressurization and dump (P&D) valve, which now performs the fuel staging function based on total fuel flow. The system is shown schematically in Figure 43. By leaving the engine control intact, the engine fuel flow vs. thrust characteristic, and the assorted trims and biases, remain unchanged. All other engine control functions such as bleed operation and high-pressure compressor vane angle scheduling continue to be accomplished by the production control.

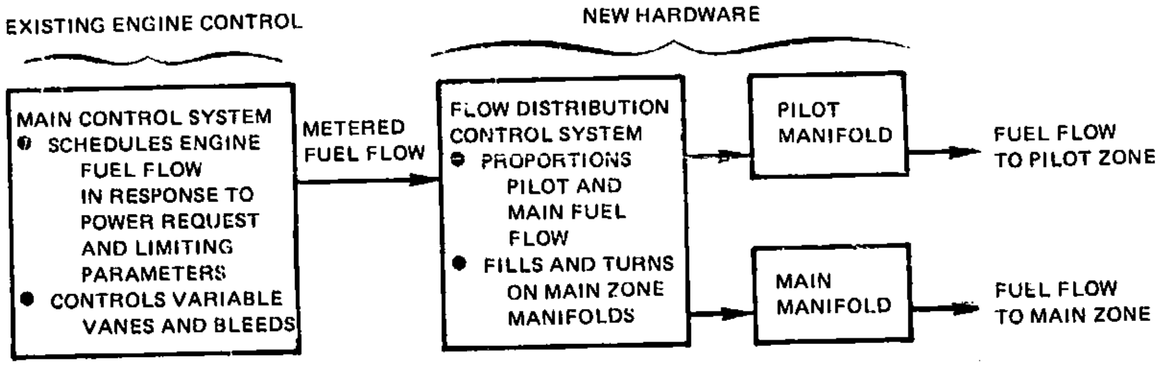
EXISTING ENGINE CONTROL
NEW HARDWARE
MAIN CONTROL SYSTEM
● SCHEDULES ENGINE FUEL FLOW IN RESPONSE TO POWER REQUEST AND LIMITING PARAMETERS
● CONTROLS VARIABLE VANES AND BLEEDS
METERED FUEL FLOW
FLOW DISTRIBUTION CONTROL SYSTEM
● PROPORTIONS PILOT AND MAIN FUEL FLOW
● FILLS AND TURNS ON MAIN ZONE MANIFOLDS
PILOT MANIFOLD
MAIN MANIFOLD
FUEL FLOW TO PILOT ZONE
FUEL FLOW TO MAIN ZONE

*Figure C-1 Concept Modified From Production Control System*

Candidate schemes were proposed to provide fuel distribution and staging between the pilot and main zones based on combustor fuel-air ratio, and to fill the main zone manifold prior to staging. Fuel pump modifications were also evaluated since some schemes for meeting the main zone manifold filling requirements and fuel distribution required additional fuel pumping capability. The candidate schemes were defined by a matrix containing various approaches for fuel distribution, main-zone manifold filling and fuel pumping. This matrix is shown in Table C-I, and the schematic diagrams for each of the schemes are presented in Section B of this Appendix. All conceptual designs are technically feasible and all are capable of providing the nominal pilot-main distribution schedule within an accuracy band of ±2 percent.

TABLE C-I

MATRIX FOR CANDIDATE CONTROL SCHEMES
FOR MODIFIED CONTROL

|  | Scheme Number |  |  |  |  |  |  |  |  |  |  |  |  |  |  |  |  |  |  |  |  |
|---|---|---|---|---|---|---|---|---|---|---|---|---|---|---|---|---|---|---|---|---|---|
|  | JT9D | 1b | 1c | 1d | 1e | 1f | 1g | 1h | 1i | 2a | 2b | 2c | 2d | 2e | 2f | 3a | 3b | 3c | 3d | 3e | 3f |
| Flow Distribution |  |  |  |  |  |  |  |  |  |  |  |  |  |  |  |  |  |  |  |  |  |
| Flow Distribution Valve |  | X | X | X | X |  |  |  |  | X | X | X |  |  | X | X | X | X | X |  |  |
| Two Metering Valves |  |  |  |  |  | X | X | X | X |  |  |  | X | X |  |  |  |  |  | X | X |
| Manifold Fill Technique |  |  |  |  |  |  |  |  |  |  |  |  |  |  |  |  |  |  |  |  |  |
| Fill Detector |  | X |  |  |  | X |  |  |  | X |  |  | X |  | X | X |  |  |  | X |  |
| Circulation |  |  |  |  |  |  |  |  |  |  |  |  |  |  |  |  |  |  |  |  |  |
| From Interstage of Main Pump |  |  | X |  |  |  | X |  |  |  |  |  |  |  |  |  | X |  |  |  |  |
| From Discharge of Main Pump |  |  |  | X |  |  |  | X |  |  |  |  |  |  |  |  |  | X |  |  | X |
| From Pilot Burner Fuel Line |  |  |  |  | X |  |  |  | X |  |  |  |  | X |  |  |  |  | X |  |  |
| From High-Pressure Auxiliary Pump |  |  |  |  |  |  |  |  |  |  | X |  |  |  |  |  |  |  |  |  |  |
| From Low-Pressure Auxiliary Pump |  |  |  |  |  |  |  |  |  |  |  | X |  |  |  |  |  |  |  |  |  |
| Pumps |  |  |  |  |  |  |  |  |  |  |  |  |  |  |  |  |  |  |  |  |  |
| One Pump | X | X | X | X | X | X | X | X | X |  |  |  |  |  |  |  |  |  |  |  |  |
| One Plus Single-Stroke Manifold Pump |  |  |  |  |  |  |  |  |  |  |  |  |  |  | X |  |  |  |  |  |  |
| Two Pumps |  |  |  |  |  |  |  |  |  | X | X | X | X | X |  |  |  |  |  |  |  |
| Variable Displacement Pump |  |  |  |  |  |  |  |  |  |  |  |  |  |  |  | X | X | X | X | X | X |

Two methods of flow distribution were considered. In one, the total flow is passed through a flow distribution valve which splits the flow in the proper proportions to the pilot and main zones. In the second, the fuel flows to the pilot and main zones are separately metered through two independent valves.

Two basic approaches were considered for filling the main zone manifold prior to staging. One of these involves the use of a single-stroke fuel pump. When fuel is initially directed to the main zone, the single-stroke fuel pump would be actuated by the main zone fuel pressure, providing a burst of fuel equal to the manifold fill requirements. The second approach for filling the main manifold involved fuel circulation through the system. Several different configurations were considered: systems that operated with a full-manifold detector to avoid the need for continuous circulation; the use of continuous circulation systems operating between either the main pump discharge and interstage location or between the main pump interstage location and inlet; the use of continuous circulation systems using auxiliary pumps in either the inlet or discharge circulation lines; and the use of continuous circulation bled from the pilot zone fuel supply line.

The various pump options resulted primarily from the options selected for flow distribution or main zone manifold filling. However, a variable displacement pump was also considered independently to determine if the simplification achieved in the control logic would offset the increased cost of the variable displacement pump.

In addition to Schemes 1b through 3f shown in Section B of this Appendix, a family of schemes was studied to evaluate the possibility of adapting the existing JT9D-7 pressurizing and dump valve to the distribution control system required for the Vorbix combustor. Preliminary studies revealed, however, that this system could not meet the pilot-main distribution accuracy requirements and detailed evaluations of these concepts were not pursued.

b. Concept Evaluation

The schemes were evaluated initially on the basis of life cycle cost and those schemes with excessive cost were eliminated from further consideration. The remaining schemes were then evaluated on the basis of complexity of modifications required to the production JT9D-7 engine control, the availability of the required technology, and potential operational problems. Each scheme was evaluated in both an all-hydromechanical configuration and in a hybrid hydromechanical and electronic configuration. The choice between these configurations was made on the basis of life cycle cost.

Life cycle costs were estimated using the equation:

$$LCC = [N_H P_H + N_E P_E] + [M_H C_H + M_E C_E] + F[W_H + W_E]$$

where:

LCC = Estimated life cycle cost

N = Number of units required including spares

P = Cost of each unit

M = Number of maintenance actions required during the life of the aircraft

C = Average cost of each maintenance action

F = Fuel cost to carry one additional pound of weight during the life of the aircraft

W = Control system weight

and the subscripts:

H = Relates to hydromechanical elements

E = Relates to electronic elements

Factors for the life cycle cost equation were determined by estimating production cost, maintenance requirements, and weight for each of the candidate schemes. Where possible, the actual costs, maintenance requirements, and weights of added items were used directly in the equation. When specific data were not available, correlations were used, as shown in Figures C-2 and C-3.

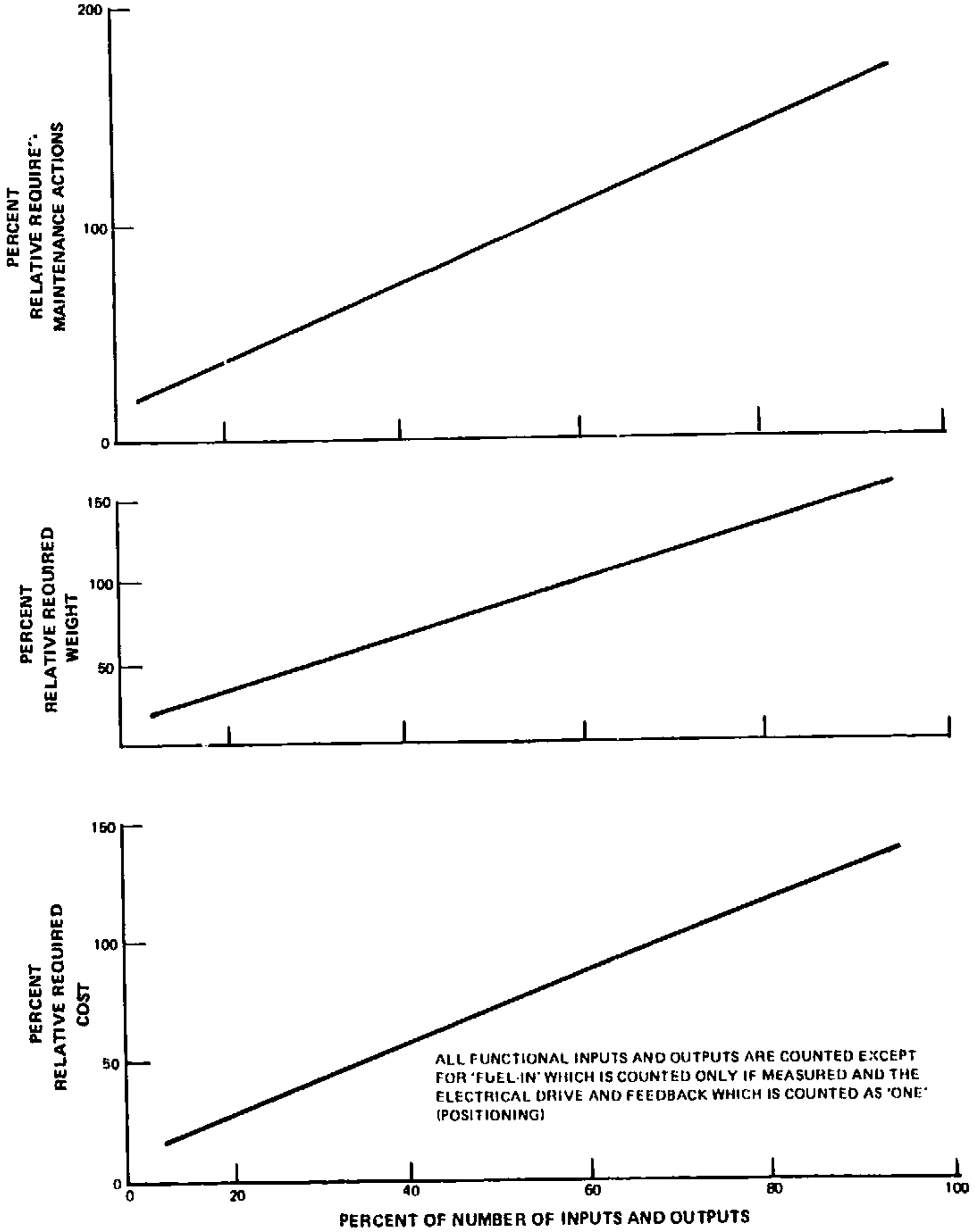

ALL FUNCTIONAL INPUTS AND OUTPUTS ARE COUNTED EXCEPT FOR 'FUEL-IN' WHICH IS COUNTED ONLY IF MEASURED AND THE ELECTRICAL DRIVE AND FEEDBACK WHICH IS COUNTED AS 'ONE' (POSITIONING)

*Figure C-2 Correlations of Reliability, Weight, and Cost for Hydromechanical Control Elements*

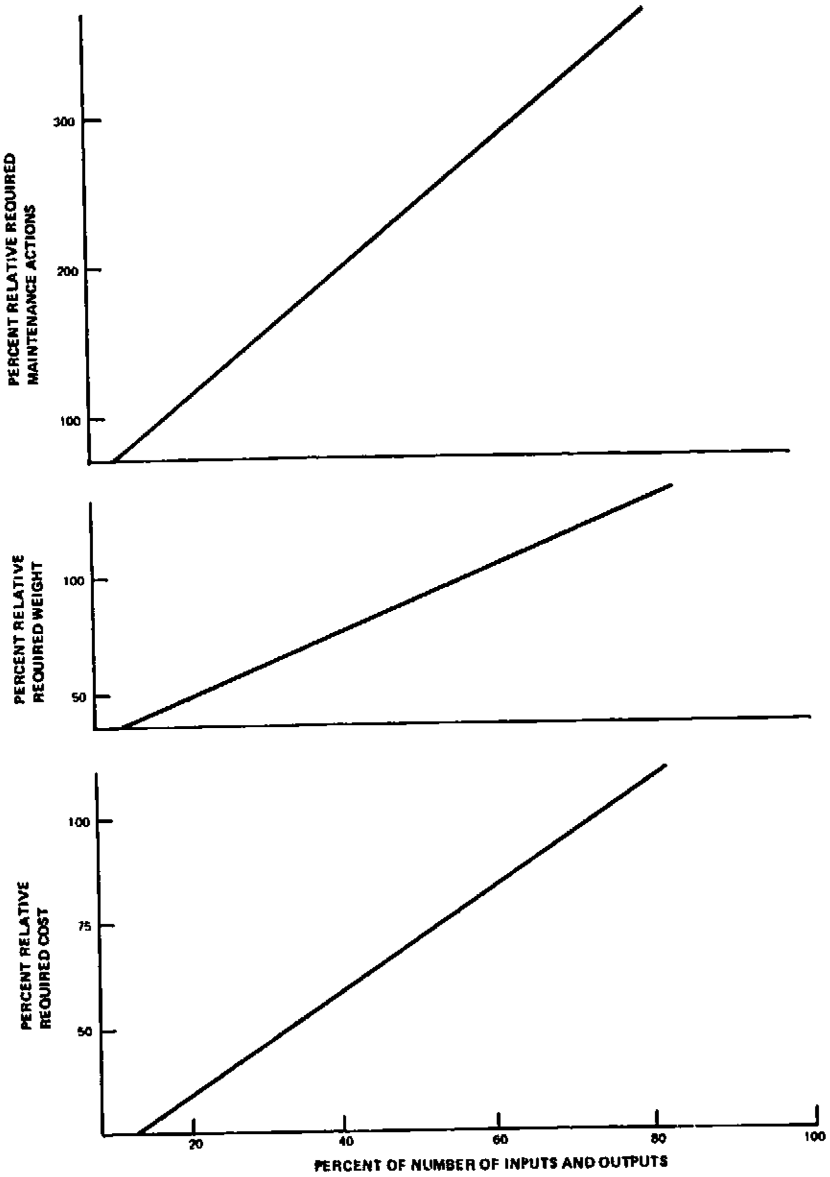

*Figure C-3 Correlations of Reliability, Weight, and Cost for Electronic Control Elements*

The relative production costs, maintenance costs, and weights are summarized in Figures C-4, C-5 and C-6, respectively. The resulting life cycle cost comparison is shown in Figure C-7. Before proceeding to concept selection, the sensitivity of the life cycle cost estimates to errors in the assumptions was determined by introducing 20-percent reductions into each of the factors in the life cycle cost equation for each of the schemes. The lowest life cycle cost estimate achieved by reducing one factor in the equation by 20 percent was then used with the initial estimate to obtain life cycle cost estimate bands for each scheme. In no case did this cause a change in the overall life cycle cost trends.

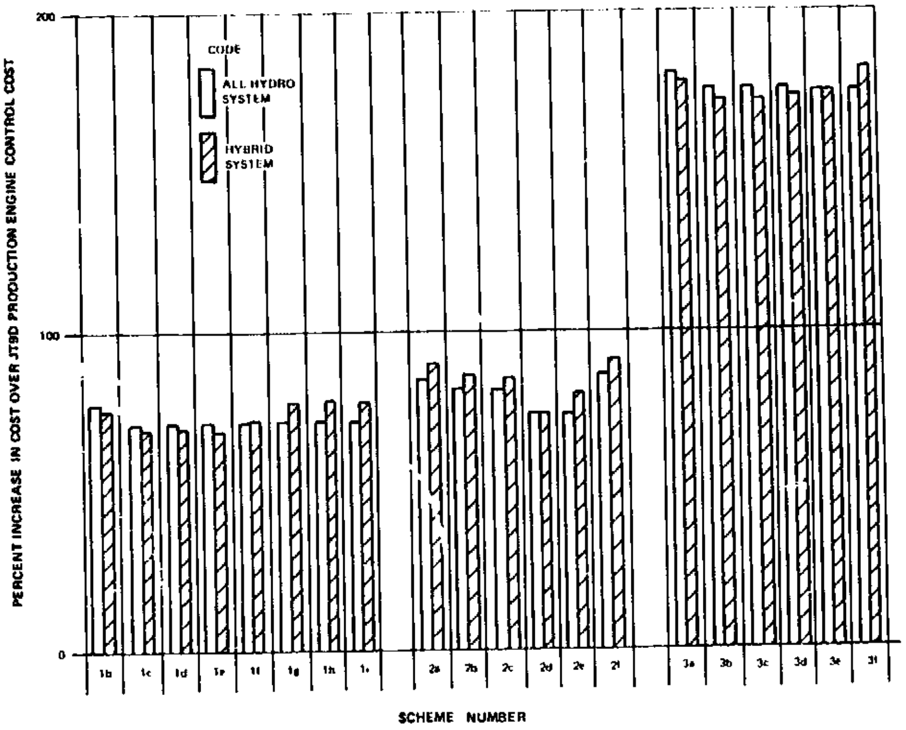

*Figure C-4 Relative Estimated Production Costs of Candidate Fuel Control Schemes*

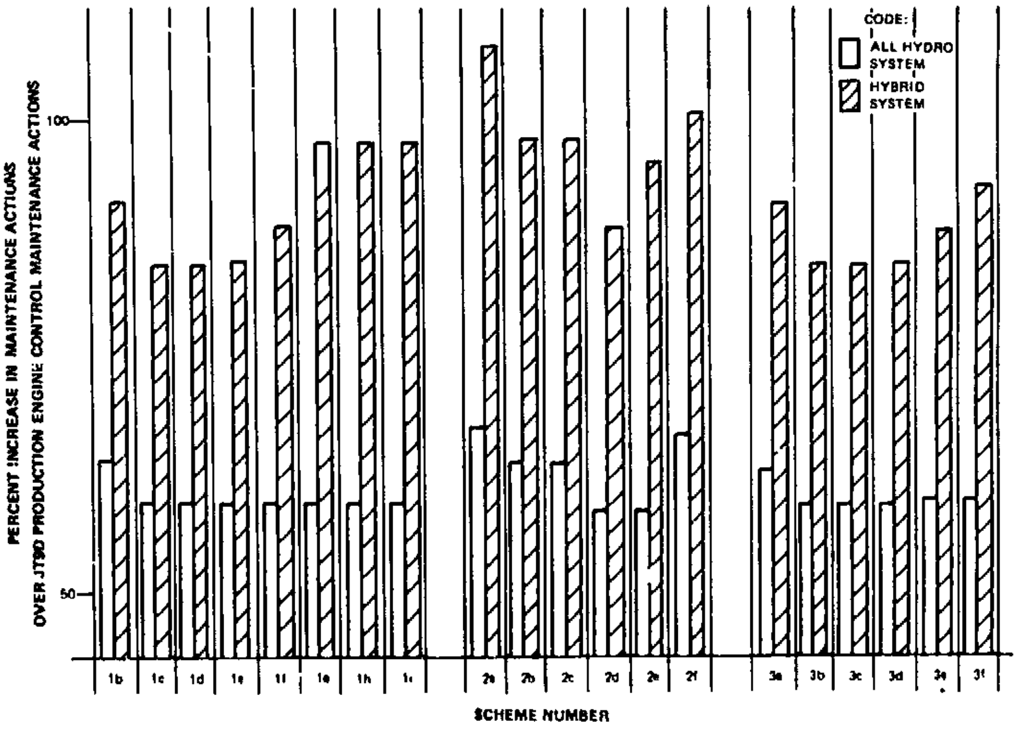

*Figure C-5 Relative Estimated Maintenance Requirements of Candidate Fuel Control Schemes*

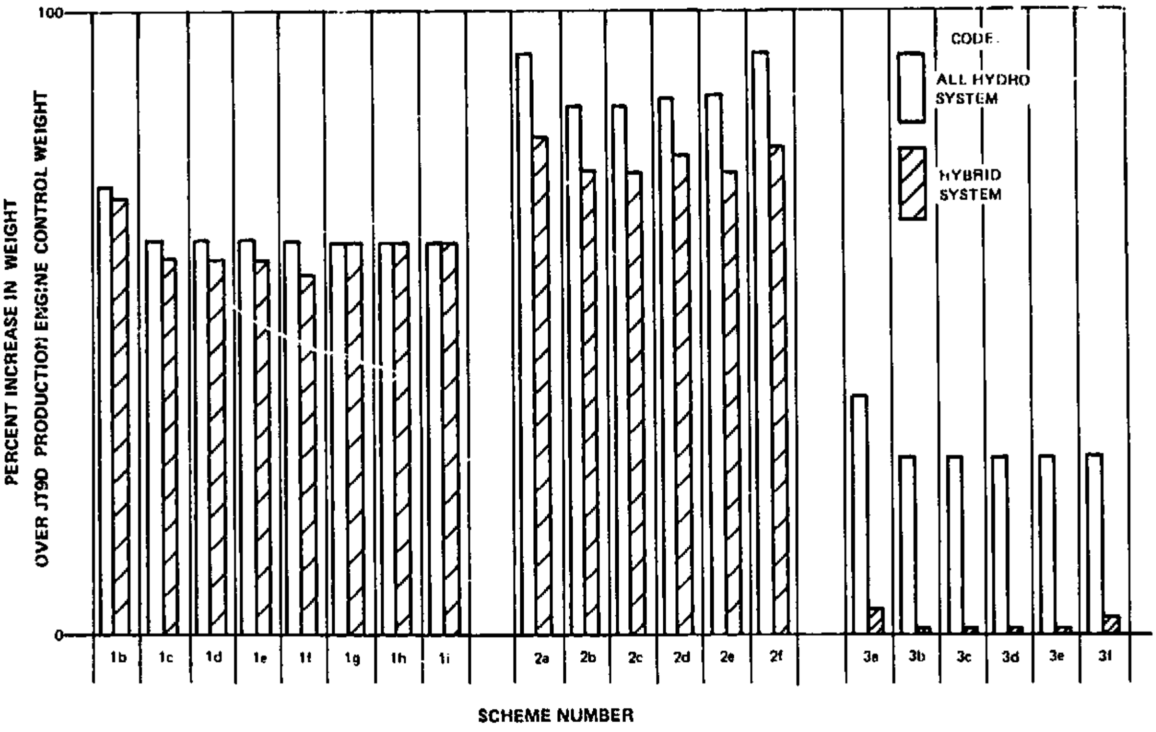

*Figure C-6 Relative Estimated Weights of Candidate Fuel Control Schemes*

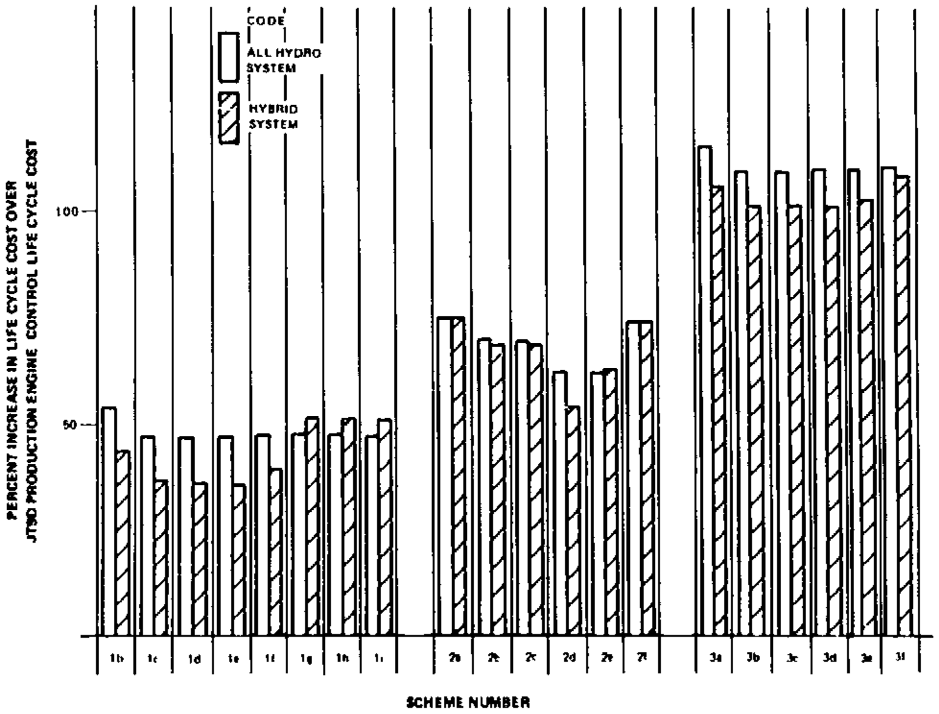

*Figure C-7 Relative Estimated Life Cycle Costs of Candidate Fuel Control Schemes*

c. Concept Selection

Concept selection was based on estimated life cycle cost, impact on the existing engine control system, and critical technology items, as summarized in Figure C-8. The family of schemes designated 3a through 3f were eliminated from further consideration on the basis of the life cycle cost estimates. These schemes all included the variable displacement pump, and the high resulting life cycle cost indicated that this approach did not provide sufficient reduction in the control logic requirements to offset the high procurement cost of the pump.

| SCHEME NUMBER | EXCESSIVELY COSTLY-OUTSIDE OF THE SENSITIVITY BAND | MORE THAN "MINIMUM CHANGES TO 1975 BILL OF MATERIAL SYSTEM" | FILL DETECTOR TECHNOLOGY IS TOO WEAK TO JUSTIFY* | CIRCULATION OF METERED FLOW JUDGED TO CAUSE START PROBLEMS | BEST OF ACCEPTABLE SYSTEMS |
|---|---|---|---|---|---|
| 1b | | | X | | |
| 1c | | | | | ◭ HYBRID OR HYDRO |
| 1d | | | | | ▲ HYBRID OF HYDRO |
| 1e | | | | X | |
| 1f | | X | | | |
| 1g | | X | | | |
| 1h | | X | | | |
| 1i | | X | | | |
| 2a | | X | | | |
| 2b | | X | | | |
| 2c | | X | | | |
| 2d | | X | | | |
| 2e | | X | | | |
| 2f | | | X | | |
| 3a | X | | | | |
| 3b | X | | | | |
| 3c | X | | | | |
| 3d | X | | | | |
| 3e | X | | | | |
| 3f | X | | | | |

*TO DATE, NO METHOD HAS BEEN DISCOVERED WHICH RELIABLY DETERMINES THE QUANTITY AND DISTRIBUTION OF FUEL EXISTING IN A MANIFOLD BEFORE THE MANIFOLD IS TURNED ON.

*Figure C-8 Summary of Fuel Control Selection Process Results*

The concepts requiring two metering valves (Schemes 1f through 1i) and the concepts requiring two pumps (Schemes 2a through 2e) were eliminated on the basis of the number of changes required to the current JT9D-7 engine control. Schemes 1b and 2f were then eliminated because of their requirement for a full manifold detector, and it appears that considerable development may be required before a satisfactory detector can be obtained. Scheme 1e uses a metered circulation system in which fuel for main zone manifold filling and circulation is bled from the pilot zone fuel flow. Although this concept appears technically feasible, it could cause starting problems, and failure of the valve controlling the circulation flow could starve the pilot zone of fuel. Since Schemes 1c and 1d provided all the benefits of Scheme 1c without being subject to the potential problems of the metered circulation system, Scheme 1c was eliminated and Schemes 1c and 1d were identified as the most promising systems.

The final step in the evaluation was to determine the merits of the hybrid hydromechanical-electronic systems relative to the all hydromechanical systems for the two remaining candidate schemes. Figure C-7 indicates that the hybrid designs can be produced and operated for lower life cycle cost. The significance of this result depends on the sensitivity of the life cycle cost estimate to changes in the assumptions upon which the estimate was based. Examination of each factor in the life cycle cost equation shows that the relative ranking is most sensitive to procurement costs. Parity is reached if either the hydromechanical unit becomes 30 percent cheaper or the hybrid unit becomes approximately 30 percent more expensive. All other factors require unreasonably large changes (or cannot physically be changed enough) to reverse the order of ranking.

In conclusion, both Schemes 1c and 1d appear acceptable in their hybrid configurations. The final decision between these two would require a detailed design analysis beyond the scope of the current program. Both systems are essentially the same except for the pump connections. Scheme 1c, shown in Figure C-9, was selected as the model for the breadboard design of the Phase III engine fuel control.

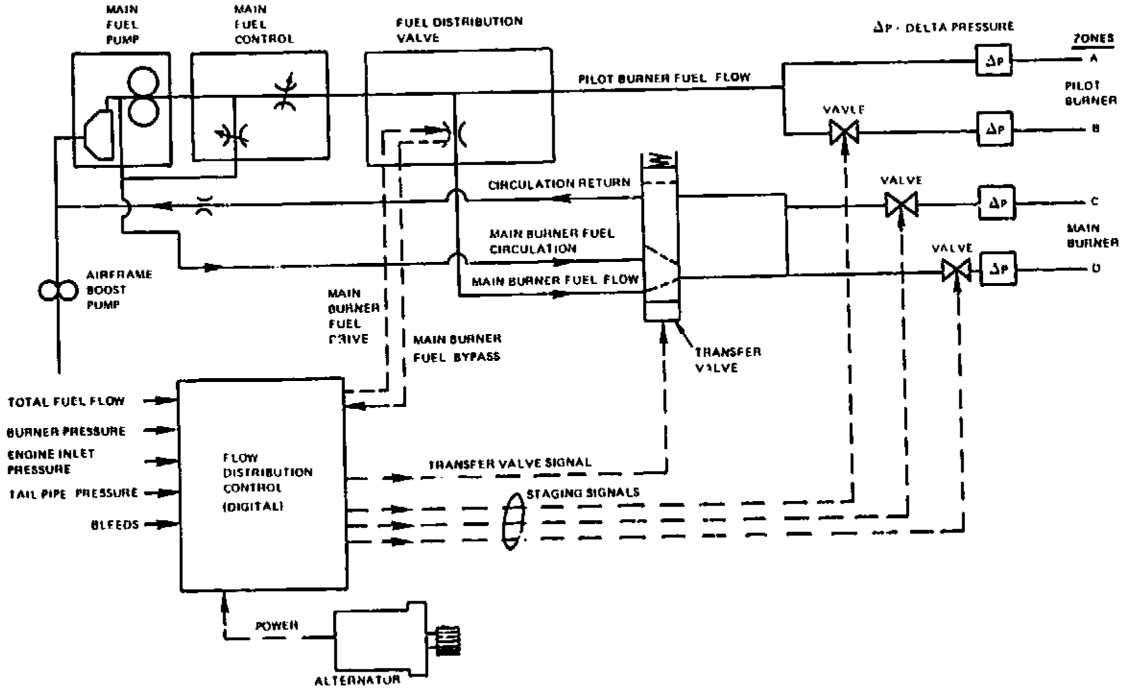
MAIN FUEL PUMP
MAIN FUEL CONTROL
FUEL DISTRIBUTION VALVE
ΔP - DELTA PRESSURE
ZONES
A
PILOT BURNER FUEL FLOW
PILOT BURNER
VAVLE
B
ΔP
CIRCULATION RETURN
VALVE
C
MAIN BURNER
MAIN BURNER FUEL CIRCULATION
VALVE
D
MAIN BURNER FUEL FLOW
AIRFRAME BOOST PUMP
MAIN BURNER FUEL DRIVE
MAIN BURNER FUEL BYPASS
TRANSFER VALVE
TOTAL FUEL FLOW
BURNER PRESSURE
ENGINE INLET PRESSURE
TAIL PIPE PRESSURE
BLEEDS
FLOW DISTRIBUTION CONTROL (DIGITAL)
TRANSFER VALVE SIGNAL
STAGING SIGNALS
POWER
ALTERNATOR

*Figure C-9 Schematic Diagram of Fuel Control Scheme 1c*

## 2. CONCEPTUAL DESIGN OF FUEL CONTROL USING 1985 TECHNOLOGY

### a. Fuel Control Design Requirements

The fuel control design study for the Vorbix combustor was conducted in a manner parallel to that discussed in Section IV-B of the basic document. The design requirements were reviewed, relative to the anticipated 1985 technology. The scope of the control requirements was increased to respond to all engine control requirements, including high-pressure compressor vane angle scheduling and bleed valve control. No attempt was made to retain existing control components in order to capitalize on the economies of integration of the various control functions. The required control parameters are listed in Table C-II.

TABLE C-II

CONTROL SYSTEM REQUIREMENTS FOR CONTROL
USING 1985 TECHNOLOGY

Current Engine Requirements

- Control fuel flow on basis of high-pressure rotor speed, power lever angle, speed set bias, and acceleration and deceleration limits.
- Control the variable vane stagger angles.
- Control fuel flow for thrust reversing, flight idle, and cold starting with enrichment.
- Control one station 3 bleed valve, four station 3.5 bleed valves, and 2 fifteenth-stage bleed valves.
- Provide compressor surge warning signal.
- Fail in an operationally safe manner.

New Requirements

- Distribute fuel between pilot and main zones.
- Provide electronic systems failure warning signal.

Optional Capabilities at Small Additional Cost

- Control fuel flow with engine pressure ratio limiting.
- Provide engine degradation warning signal.

### b. Identification of Candidate Schemes

Candidate schemes were identified through a matrix technique similar to that used for the modified production control. The size of the matrix was reduced, to eliminate those schemes that were found to be noncompetitive in the study of the modified control. Both the single-stroke pump used for main burner manifold filling and the variable displacement pump were eliminated. In addition, the metered circulation system was eliminated, and only one auxiliary circulation pump scheme was included since no important differences were identified between the two schemes considered in the first study. All schemes considered use digital electronics for all functions, since current technology growth trends indicate that this approach will be substantially superior by 1985.

The resulting matrix included four schemes and is shown in Table C-III. Schematic diagrams for the schemes are presented in Section B of this Appendix.

TABLE C-III

MATRIX FOR CANDIDATE CONTROL SCHEMES FOR CONTROL SYSTEMS USING 1985 TECHNOLOGY

| | Scheme | | | |
|---|---|---|---|---|
| | A | B | C | D |
| Flow Distribution | | | | |
| Flow Distribution Valve | X | X | X | |
| Two Metering Valves | | | | X |
| Manifold Fill Technique | | | | |
| Fill Detector | X | | | X |
| Circulation | | X | X | |
| Pumps | | | | |
| One Pump | X | X | | |
| Two Pumps | | | X | X |

### c. Concept Evaluation and Selection

Since the selection of schemes had included an initial screening process to eliminate concepts determined to be unpromising from the previous study, the evaluation for the all-new schemes consisted only of a life cycle cost estimate for each scheme. The process was identical to that used previously, with individual estimates being made for production cost, maintenance requirements, and weight.

Actual costs, maintenance history, and weights were used where sufficient data were available, and correlation curves were used where direct information was not available. The correlation factors for the hydromechanical components were the same as those used previously, as it was assumed that the 1975 hydromechanical technology has reached a level of maturity where no significant improvements are anticipated. For the electronic components, however, the factors were adjusted to reflect technology growth, as shown in Figure C-10.

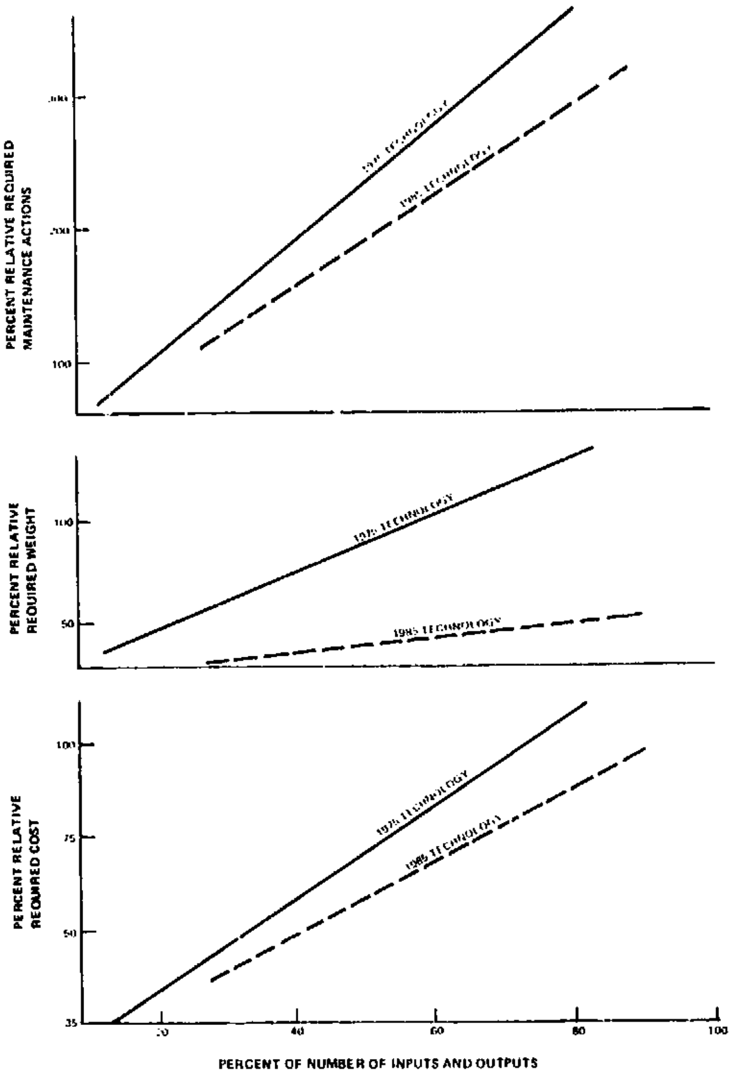

*Figure C-10 Correlations of Reliability, Weight, and Cost for Electronic Control Elements Showing Anticipated Effect of Technology Growth*

The resulting components in the life cycle cost equation for Schemes A, B, C, and D are presented in Figure C-11 and are compared to the current JT9D production control system. The relative life cycle costs calculated from these factors are presented in Figure C-12. The comparison indicates that integrated all-electronic control systems similar to these schemes will show a potential reduction in life cycle cost of approximately 40 percent relative to the current production system, when modified to control a two-stage Vorbix combustor.

These results indicate that Scheme B provides the lowest life cycle cost. This concept incorporates one fuel pump, a flow distribution valve, and the use of circulation flow to keep the main fuel manifold full. It is important to note that this scheme incorporates the same general design features as the add-on modification Schemes 1c and 1d selected in the preceeding study.

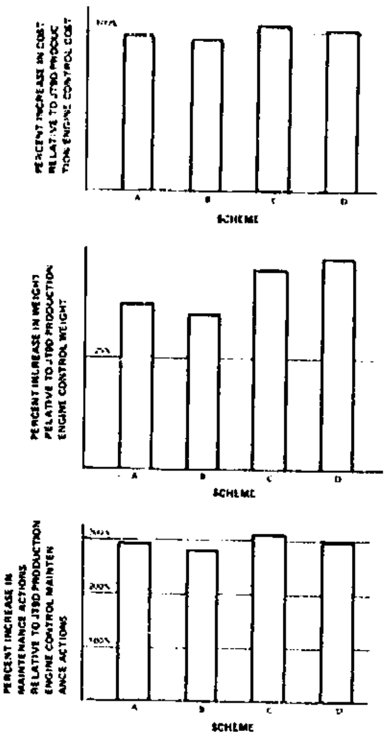

*Figure C-11* *Relative Estimated Production Costs, Maintenance Requirements, and Estimated Weights of Candidate New Control Schemes*

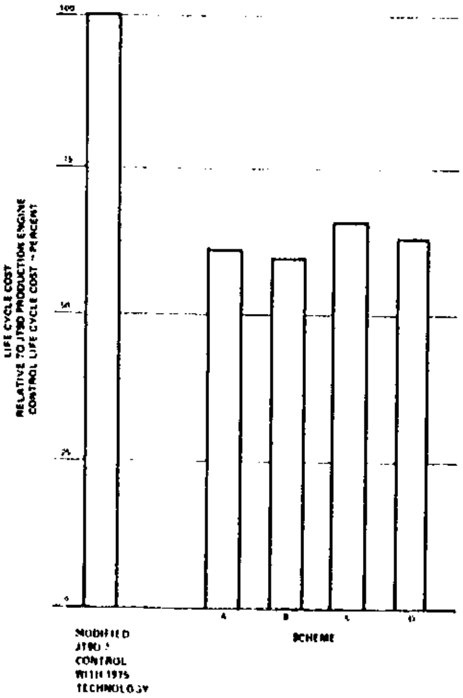

*Figure C-12* *Relative Estimated Life Cycle Costs of Candidate New Control Schemes*

ORIGINAL PAGE IS
OF POOR QUALITY

## B. STUDY SCHEMES

Schematic diagrams for the schemes presented in Table C-I are contained in Figures C-13 through C-26.

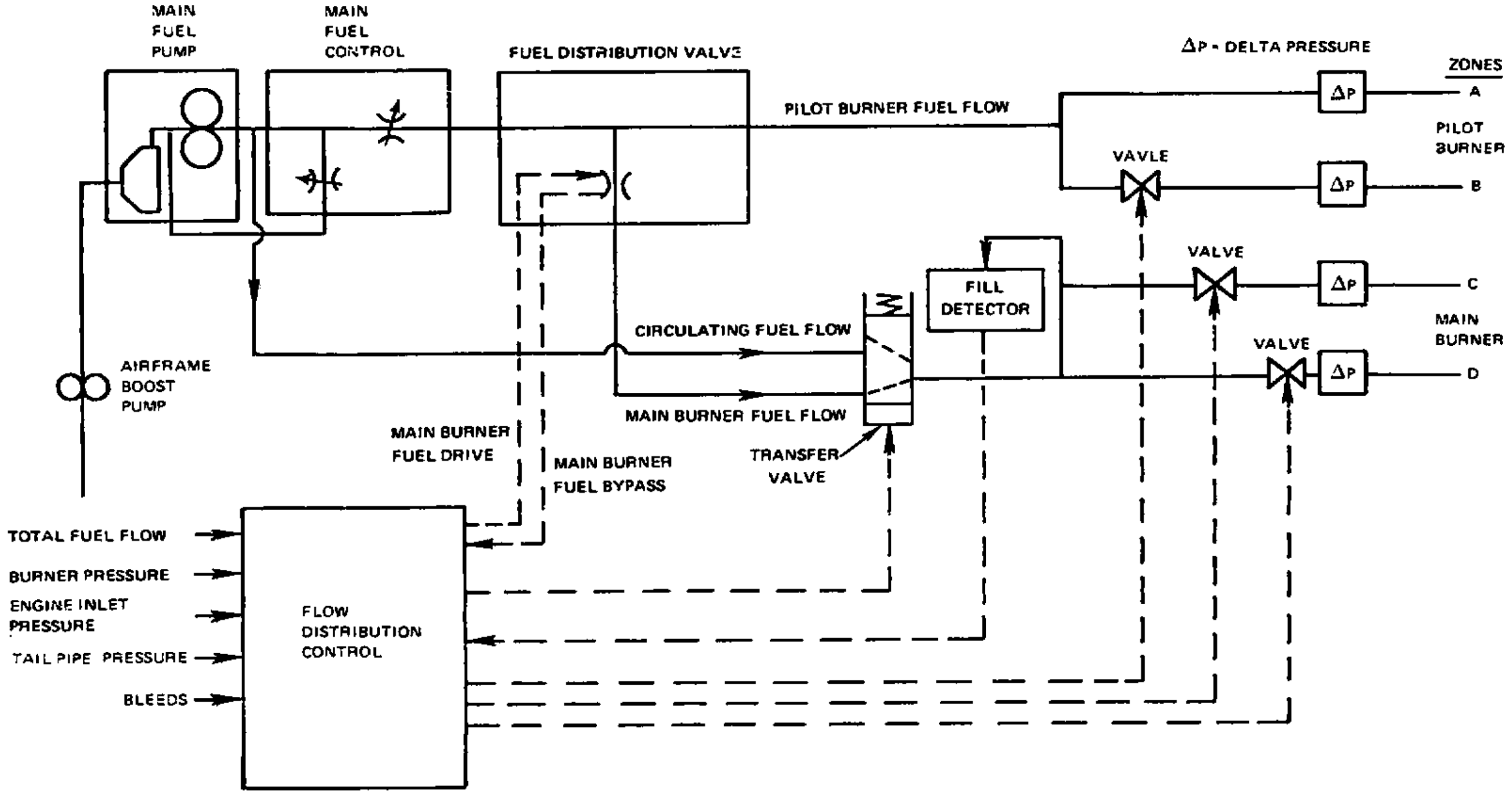
MAIN FUEL PUMP
MAIN FUEL CONTROL
FUEL DISTRIBUTION VALVE
ΔP - DELTA PRESSURE
ZONES
A
PILOT BURNER
B
C
MAIN BURNER
D
PILOT BURNER FUEL FLOW
VAVLE
VALVE
VALVE
ΔP
ΔP
ΔP
ΔP
FILL DETECTOR
CIRCULATING FUEL FLOW
MAIN BURNER FUEL FLOW
TRANSFER VALVE
AIRFRAME BOOST PUMP
MAIN BURNER FUEL DRIVE
MAIN BURNER FUEL BYPASS
FLOW DISTRIBUTION CONTROL
TOTAL FUEL FLOW
BURNER PRESSURE
ENGINE INLET PRESSURE
TAIL PIPE PRESSURE
BLEEDS

*Figure C-13 Control Scheme 1b*

ORIGINAL PAGE IS
OF POOR QUALITY

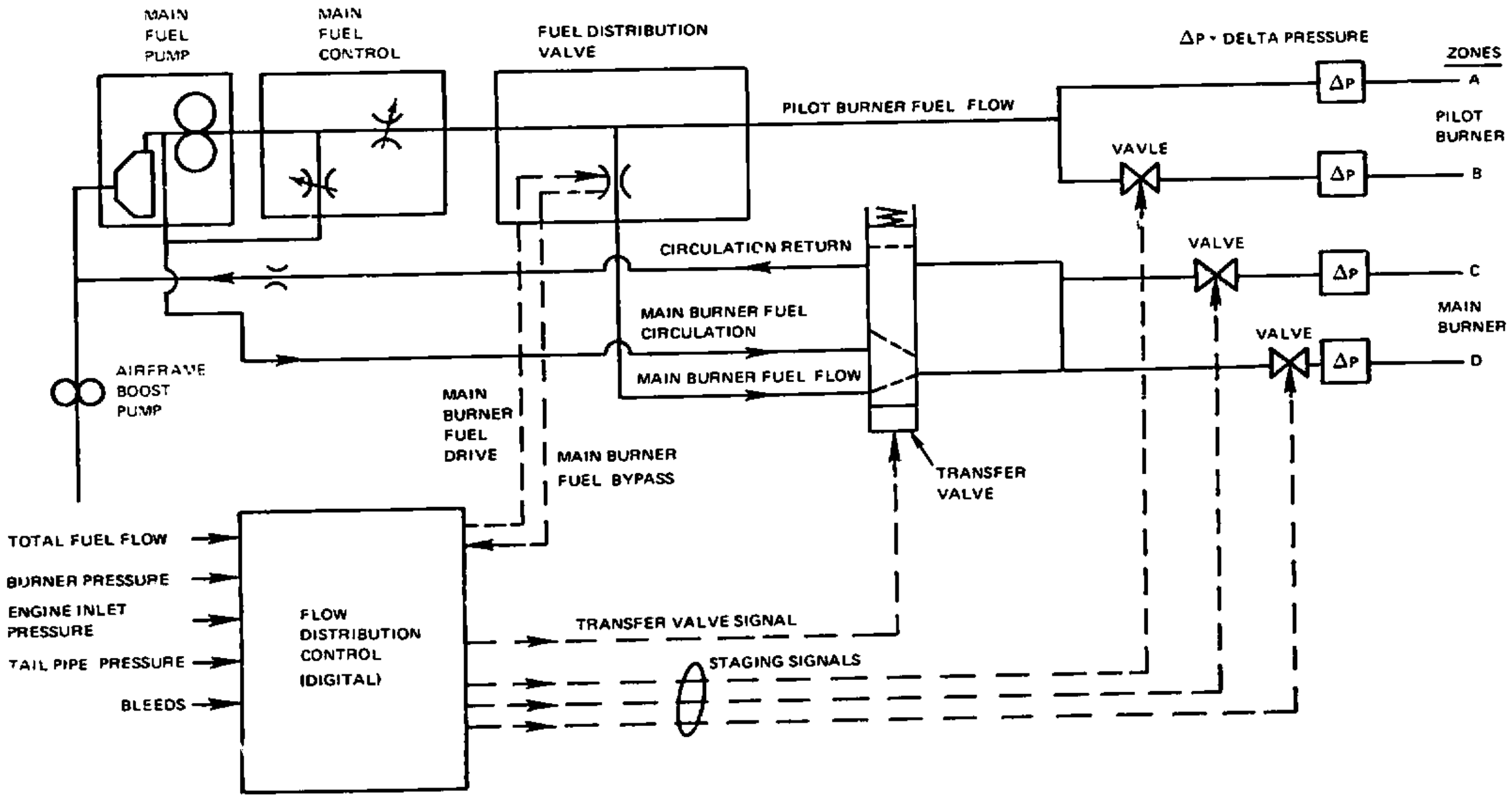
MAIN FUEL PUMP
MAIN FUEL CONTROL
FUEL DISTRIBUTION VALVE
ΔP - DELTA PRESSURE
ZONES
A
PILOT BURNER
B
C
MAIN BURNER
D
ΔP
PILOT BURNER FUEL FLOW
VAVLE
VALVE
VALVE
CIRCULATION RETURN
MAIN BURNER FUEL CIRCULATION
MAIN BURNER FUEL FLOW
AIRFRAME BOOST PUMP
MAIN BURNER FUEL DRIVE
MAIN BURNER FUEL BYPASS
TRANSFER VALVE
TOTAL FUEL FLOW
BURNER PRESSURE
ENGINE INLET PRESSURE
TAIL PIPE PRESSURE
BLEEDS
FLOW DISTRIBUTION CONTROL (DIGITAL)
TRANSFER VALVE SIGNAL
STAGING SIGNALS

*Figure C-14 Control Scheme 1c*

ORIGINAL PAGE IS
OF POOR QUALITY

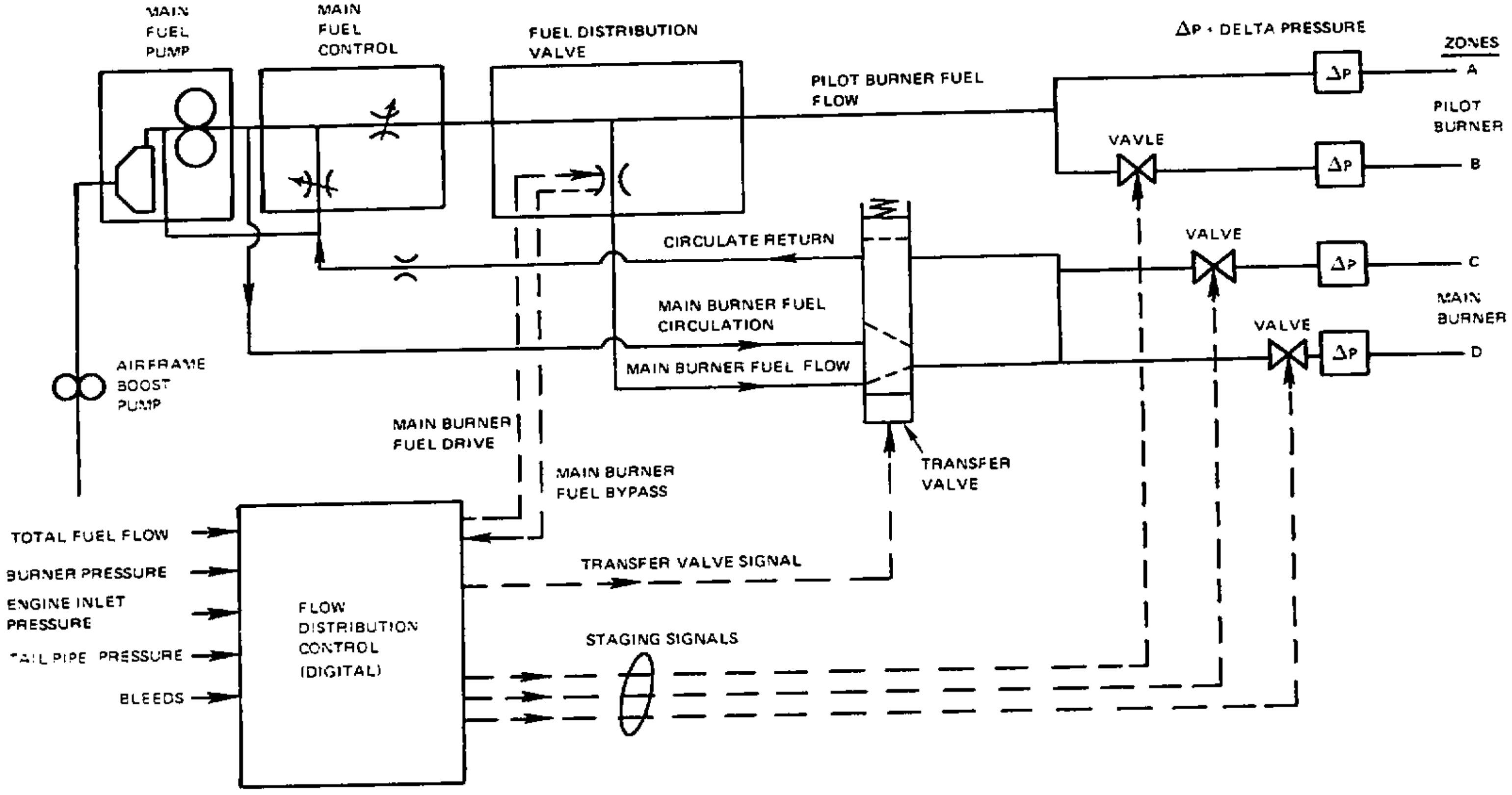
MAIN FUEL PUMP
MAIN FUEL CONTROL
FUEL DISTRIBUTION VALVE
PILOT BURNER FUEL FLOW
ΔP - DELTA PRESSURE
ZONES
A
PILOT BURNER
B
VAVLE
VALVE
C
MAIN BURNER
VALVE
D
ΔP
CIRCULATE RETURN
MAIN BURNER FUEL CIRCULATION
MAIN BURNER FUEL FLOW
AIRFRAME BOOST PUMP
MAIN BURNER FUEL DRIVE
MAIN BURNER FUEL BYPASS
TRANSFER VALVE
TOTAL FUEL FLOW
BURNER PRESSURE
ENGINE INLET PRESSURE
TAIL PIPE PRESSURE
BLEEDS
FLOW DISTRIBUTION CONTROL (DIGITAL)
TRANSFER VALVE SIGNAL
STAGING SIGNALS

Figure C-15 Control Scheme 1d

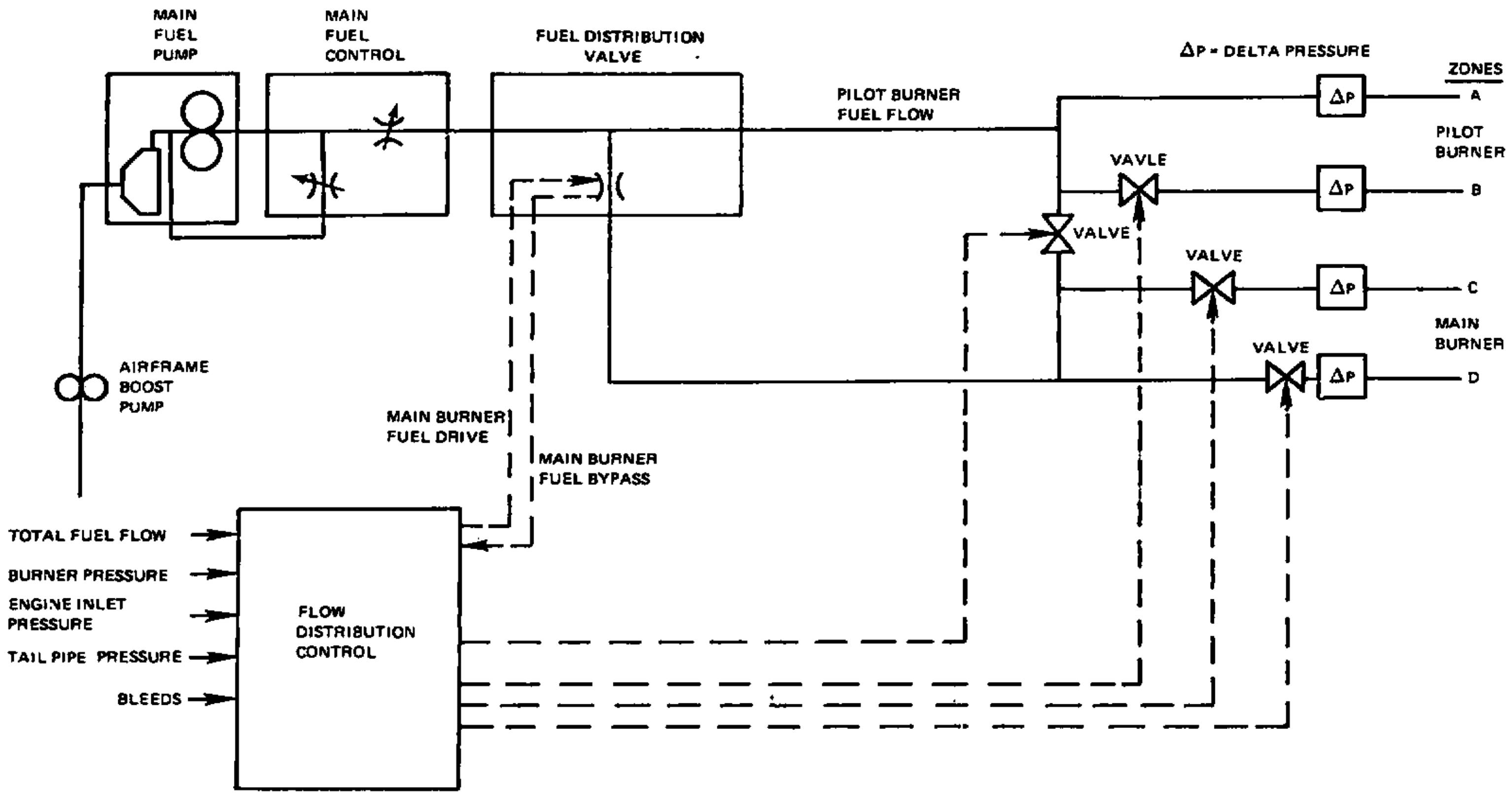
MAIN
FUEL
PUMP
MAIN
FUEL
CONTROL
FUEL DISTRIBUTION
VALVE
ΔP = DELTA PRESSURE
ZONES
PILOT BURNER
FUEL FLOW
A
ΔP
PILOT
BURNER
VAVLE
ΔP
B
VALVE
VALVE
ΔP
C
MAIN
BURNER
VALVE
ΔP
D
AIRFRAME
BOOST
PUMP
MAIN BURNER
FUEL DRIVE
MAIN BURNER
FUEL BYPASS
TOTAL FUEL FLOW
BURNER PRESSURE
ENGINE INLET
PRESSURE
TAIL PIPE PRESSURE
BLEEDS
FLOW
DISTRIBUTION
CONTROL

*Figure C-16 Control Scheme 1e*

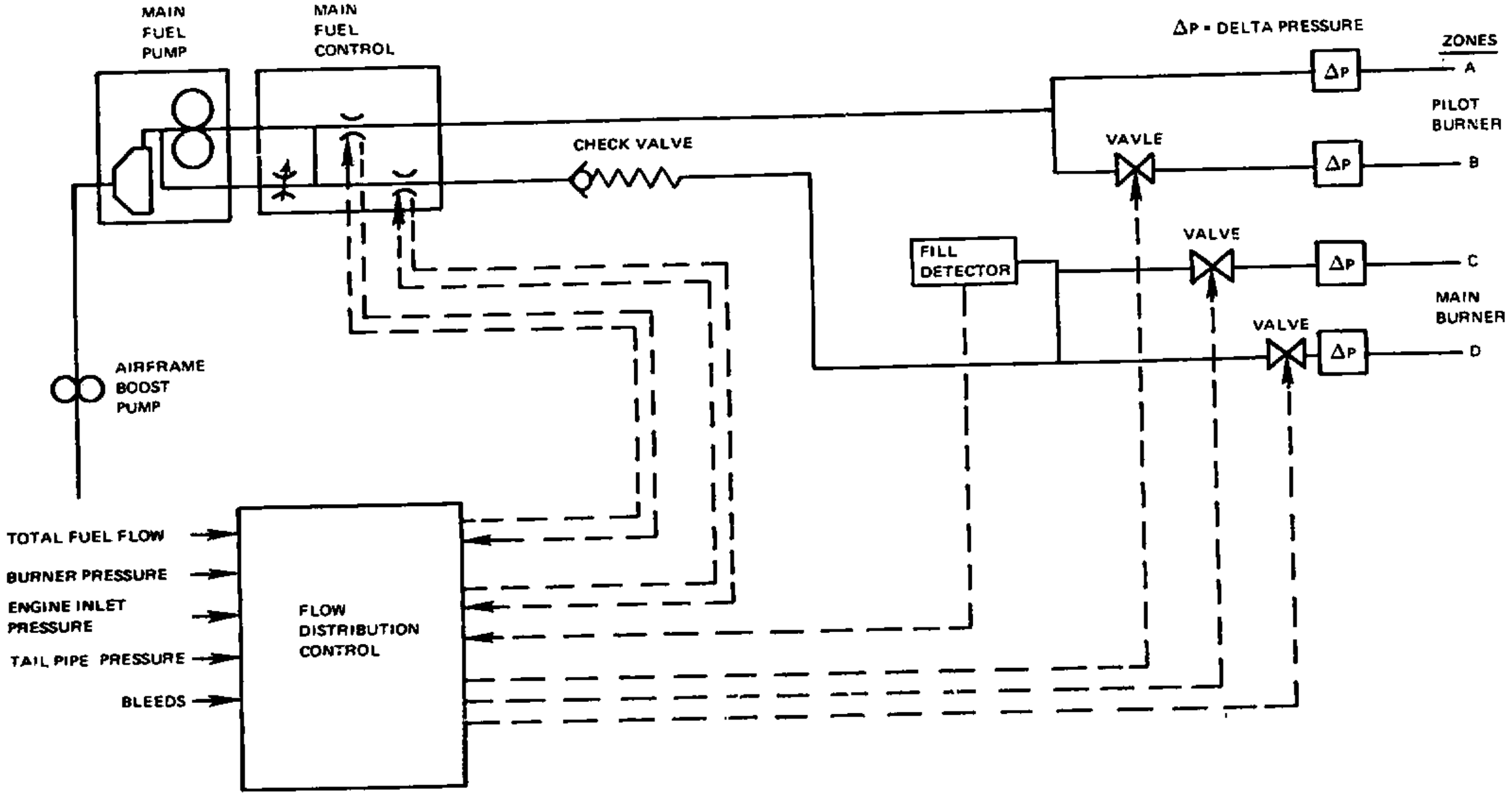
MAIN
FUEL
PUMP
MAIN
FUEL
CONTROL
CHECK VALVE
ΔP = DELTA PRESSURE
ZONES
A
PILOT
BURNER
B
C
MAIN
BURNER
D
VAVLE
VALVE
VALVE
ΔP
ΔP
ΔP
ΔP
FILL
DETECTOR
AIRFRAME
BOOST
PUMP
TOTAL FUEL FLOW
BURNER PRESSURE
ENGINE INLET
PRESSURE
TAIL PIPE PRESSURE
BLEEDS
FLOW
DISTRIBUTION
CONTROL

Figure C-17 Control Scheme 1f

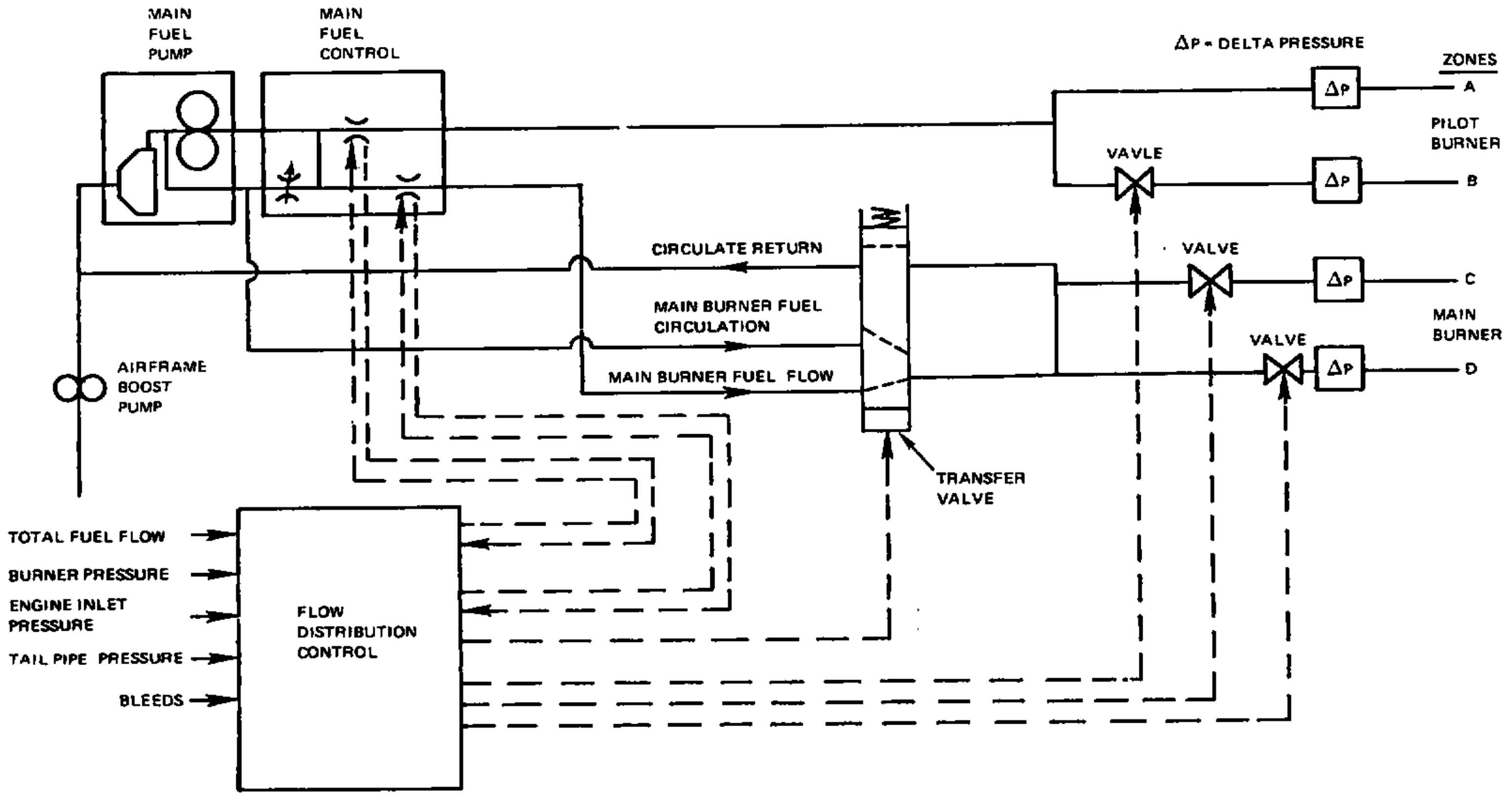
MAIN FUEL PUMP
MAIN FUEL CONTROL
ΔP = DELTA PRESSURE
ZONES
A
PILOT BURNER
B
C
MAIN BURNER
D
VAVLE
VALVE
VALVE
ΔP
ΔP
ΔP
ΔP
CIRCULATE RETURN
MAIN BURNER FUEL CIRCULATION
MAIN BURNER FUEL FLOW
TRANSFER VALVE
AIRFRAME BOOST PUMP
TOTAL FUEL FLOW
BURNER PRESSURE
ENGINE INLET PRESSURE
TAIL PIPE PRESSURE
BLEEDS
FLOW DISTRIBUTION CONTROL

Figure C-18 Control Scheme 1g

ORIGINAL PAGE IS
OF POOR QUALITY

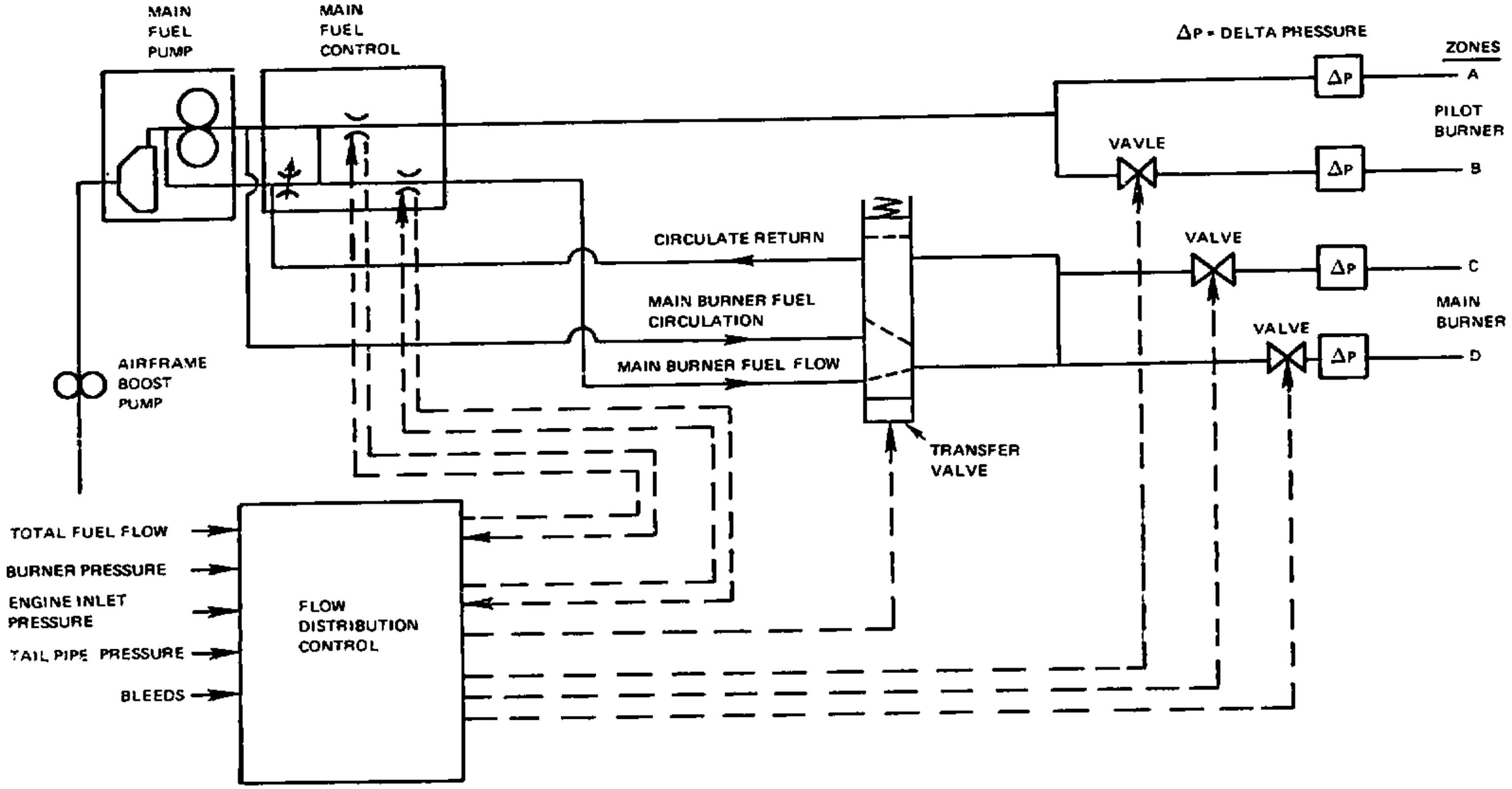
MAIN
FUEL
PUMP
MAIN
FUEL
CONTROL
ΔP = DELTA PRESSURE
ZONES
A
PILOT
BURNER
B
C
MAIN
BURNER
D
ΔP
VAVLE
VALVE
VALVE
CIRCULATE RETURN
MAIN BURNER FUEL
CIRCULATION
MAIN BURNER FUEL FLOW
TRANSFER
VALVE
AIRFRAME
BOOST
PUMP
TOTAL FUEL FLOW
BURNER PRESSURE
ENGINE INLET
PRESSURE
TAIL PIPE PRESSURE
BLEEDS
FLOW
DISTRIBUTION
CONTROL

*Figure C-19 Control Scheme 1h*

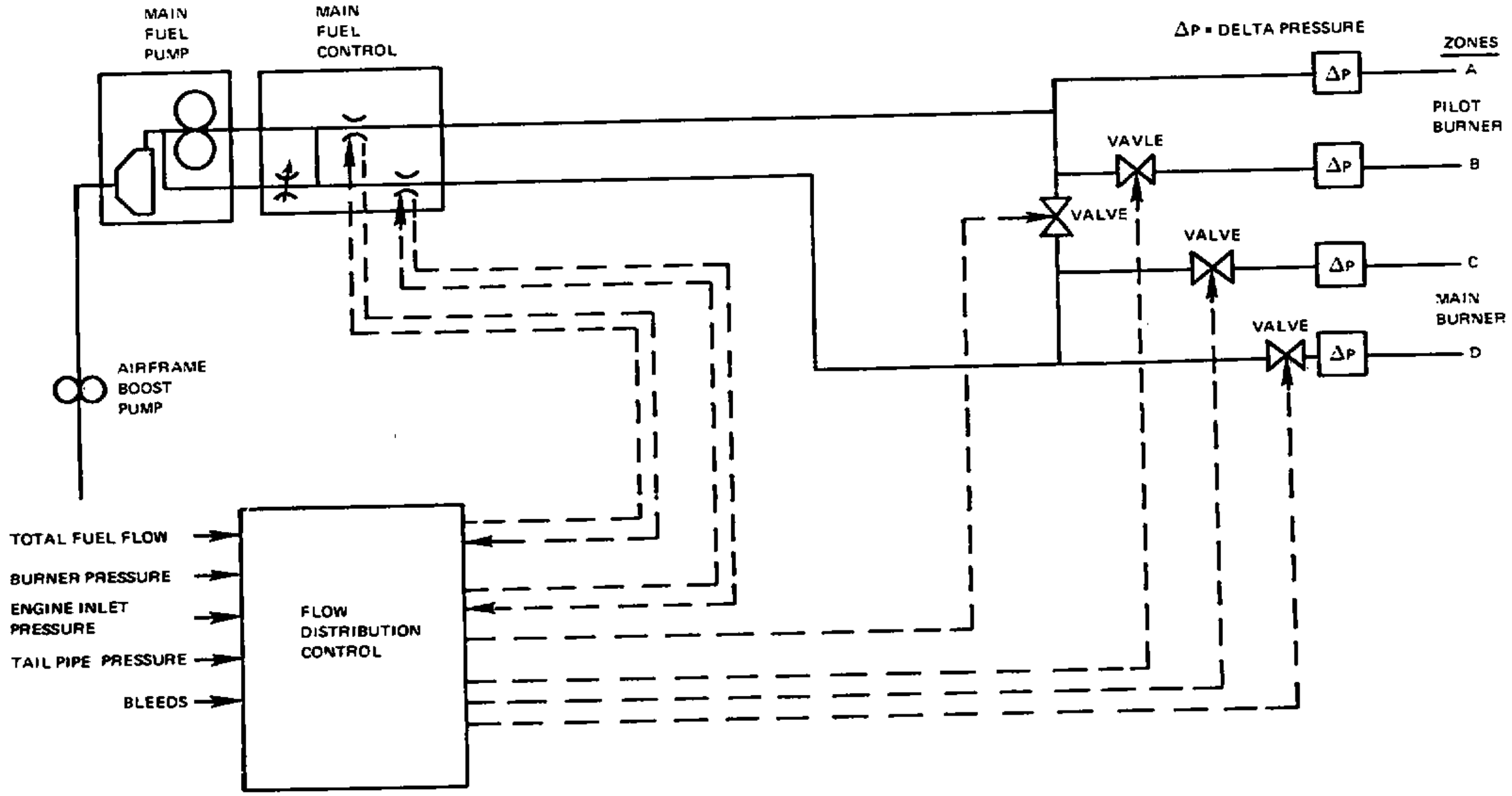
MAIN FUEL PUMP
MAIN FUEL CONTROL
ΔP = DELTA PRESSURE
ZONES
A
PILOT BURNER
B
C
MAIN BURNER
D
ΔP
VAVLE
VALVE
VALVE
VALVE
AIRFRAME BOOST PUMP
TOTAL FUEL FLOW
BURNER PRESSURE
ENGINE INLET PRESSURE
TAIL PIPE PRESSURE
BLEEDS
FLOW DISTRIBUTION CONTROL

*Figure C-20 Control Scheme 1i*

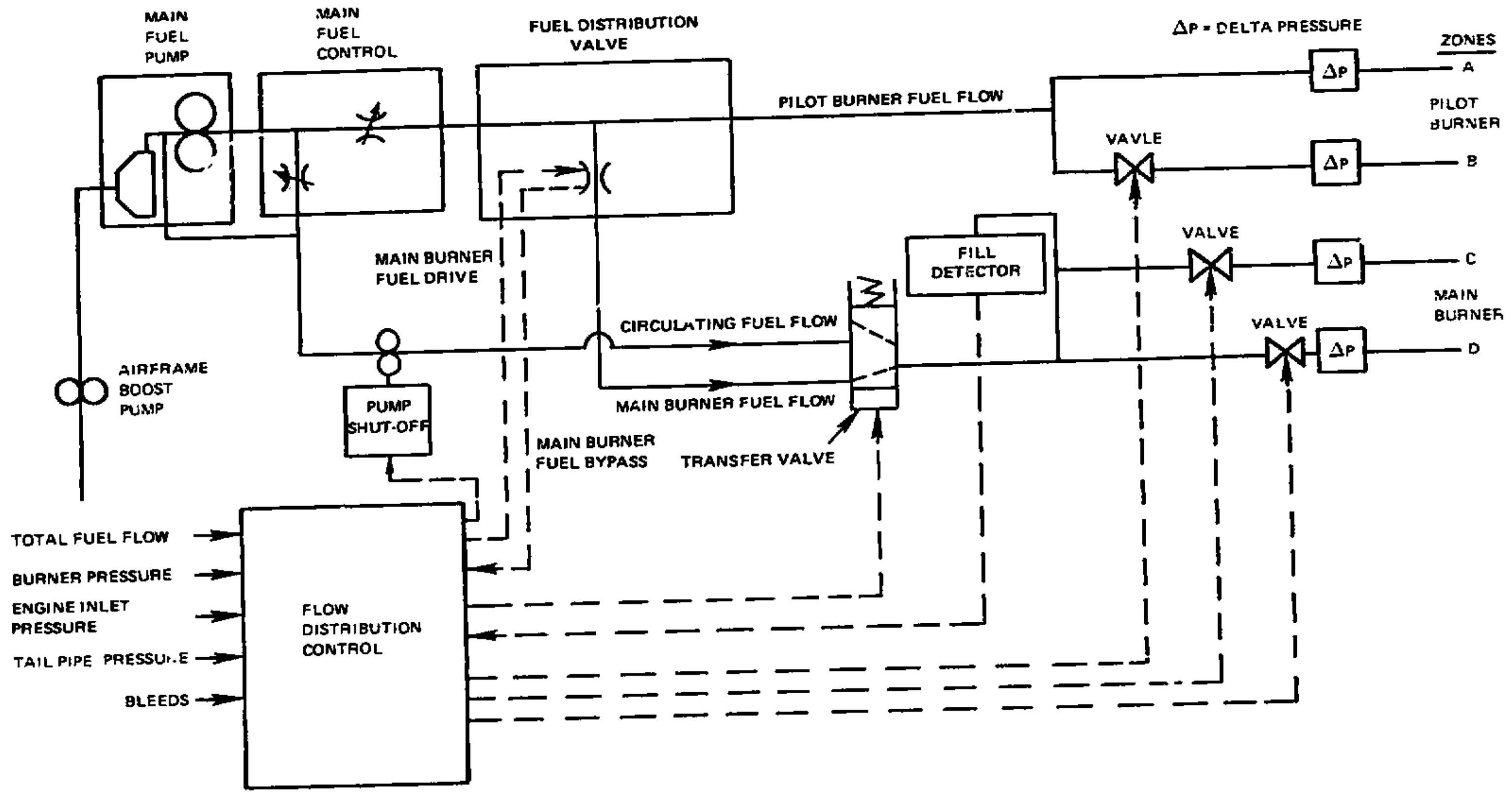
MAIN
FUEL
PUMP
MAIN
FUEL
CONTROL
FUEL DISTRIBUTION
VALVE
ΔP = DELTA PRESSURE
ZONES
A
PILOT
BURNER
B
VAVLE
ΔP
PILOT BURNER FUEL FLOW
FILL
DETECTOR
VALVE
C
MAIN
BURNER
D
MAIN BURNER
FUEL DRIVE
CIRCULATING FUEL FLOW
MAIN BURNER FUEL FLOW
AIRFRAME
BOOST
PUMP
PUMP
SHUT-OFF
MAIN BURNER
FUEL BYPASS
TRANSFER VALVE
TOTAL FUEL FLOW
BURNER PRESSURE
ENGINE INLET
PRESSURE
TAIL PIPE PRESSURE
BLEEDS
FLOW
DISTRIBUTION
CONTROL

*Figure C-21* *Control Scheme 2a*

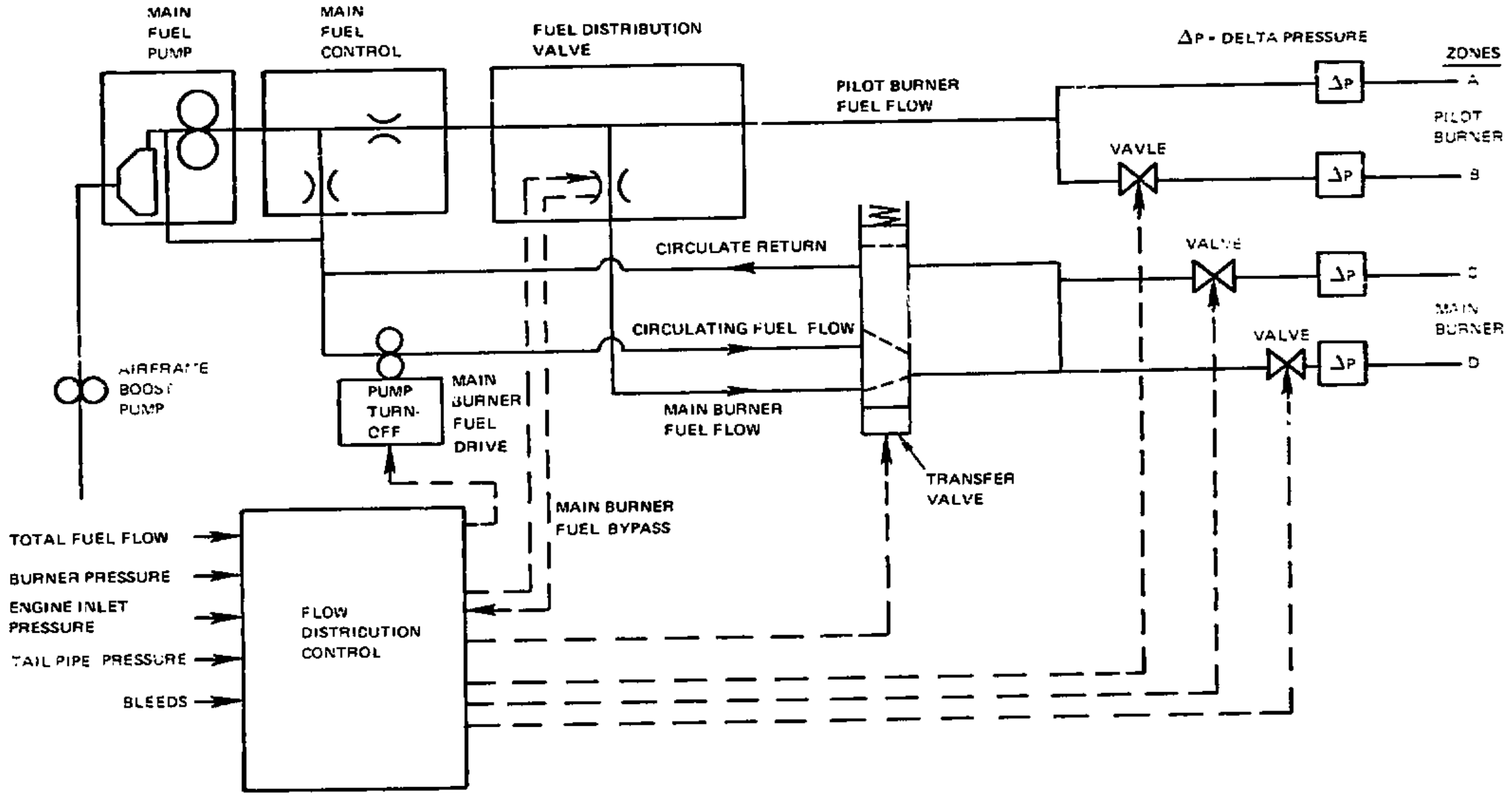
MAIN FUEL PUMP
MAIN FUEL CONTROL
FUEL DISTRIBUTION VALVE
ΔP - DELTA PRESSURE
ZONES
A
PILOT BURNER
B
C
MAIN BURNER
D
ΔP
PILOT BURNER FUEL FLOW
VAVLE
VALVE
VALVE
CIRCULATE RETURN
CIRCULATING FUEL FLOW
MAIN BURNER FUEL FLOW
TRANSFER VALVE
AIRFRAME BOOST PUMP
PUMP TURN-OFF
MAIN BURNER FUEL DRIVE
MAIN BURNER FUEL BYPASS
TOTAL FUEL FLOW
BURNER PRESSURE
ENGINE INLET PRESSURE
TAIL PIPE PRESSURE
BLEEDS
FLOW DISTRIBUTION CONTROL

*Figure C-22* Control Scheme 2b

ORIGINAL PAGE IS
OF POOR QUALITY

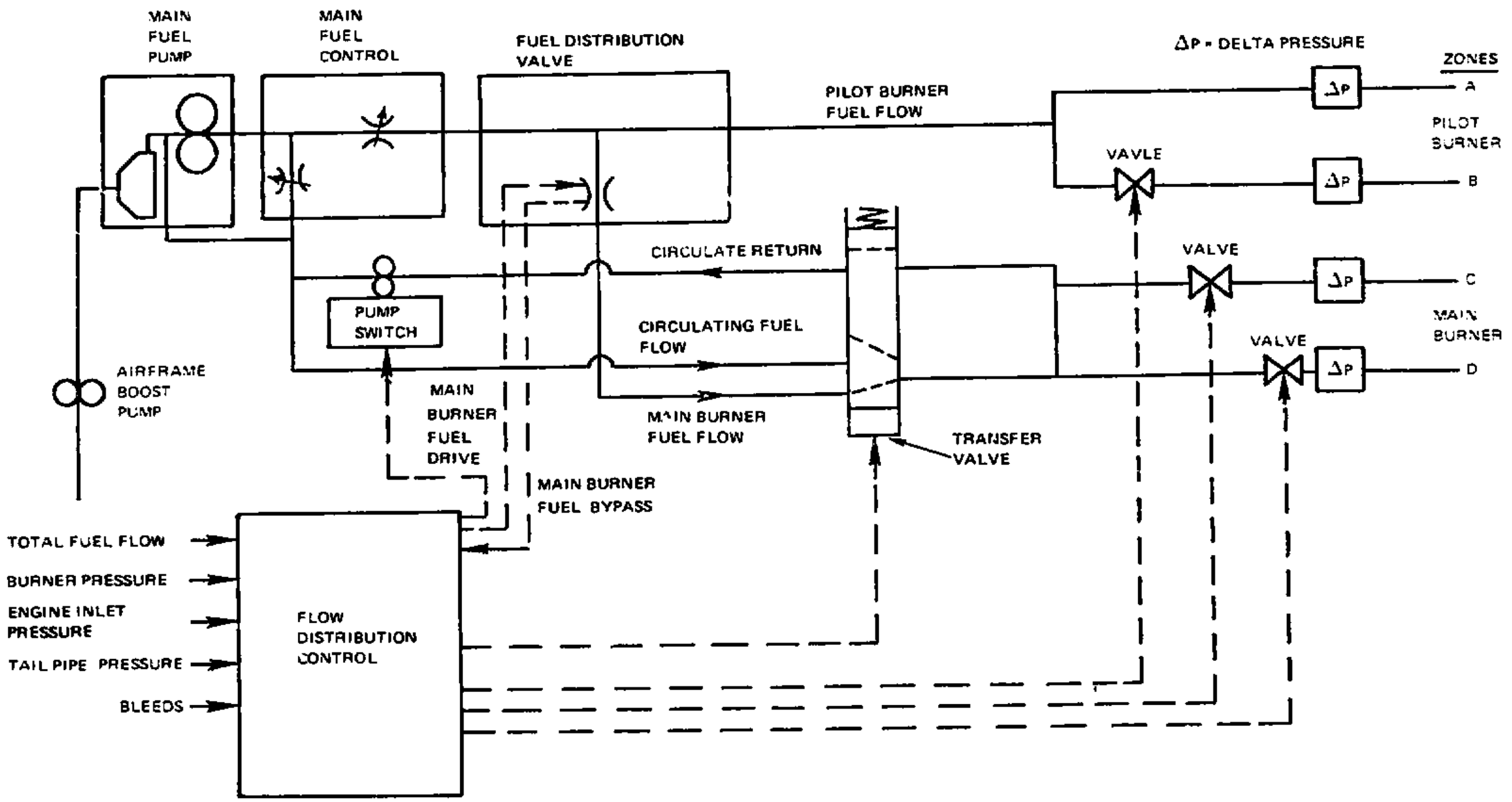
MAIN FUEL PUMP
MAIN FUEL CONTROL
FUEL DISTRIBUTION VALVE
PILOT BURNER FUEL FLOW
ΔP = DELTA PRESSURE
ZONES
A
PILOT BURNER
B
VAVLE
VALVE
C
MAIN BURNER
VALVE
D
ΔP
CIRCULATE RETURN
CIRCULATING FUEL FLOW
MAIN BURNER FUEL FLOW
TRANSFER VALVE
PUMP SWITCH
AIRFRAME BOOST PUMP
MAIN BURNER FUEL DRIVE
MAIN BURNER FUEL BYPASS
TOTAL FUEL FLOW
BURNER PRESSURE
ENGINE INLET PRESSURE
TAIL PIPE PRESSURE
BLEEDS
FLOW DISTRIBUTION CONTROL

*Figure C-23 Control Scheme 2c*

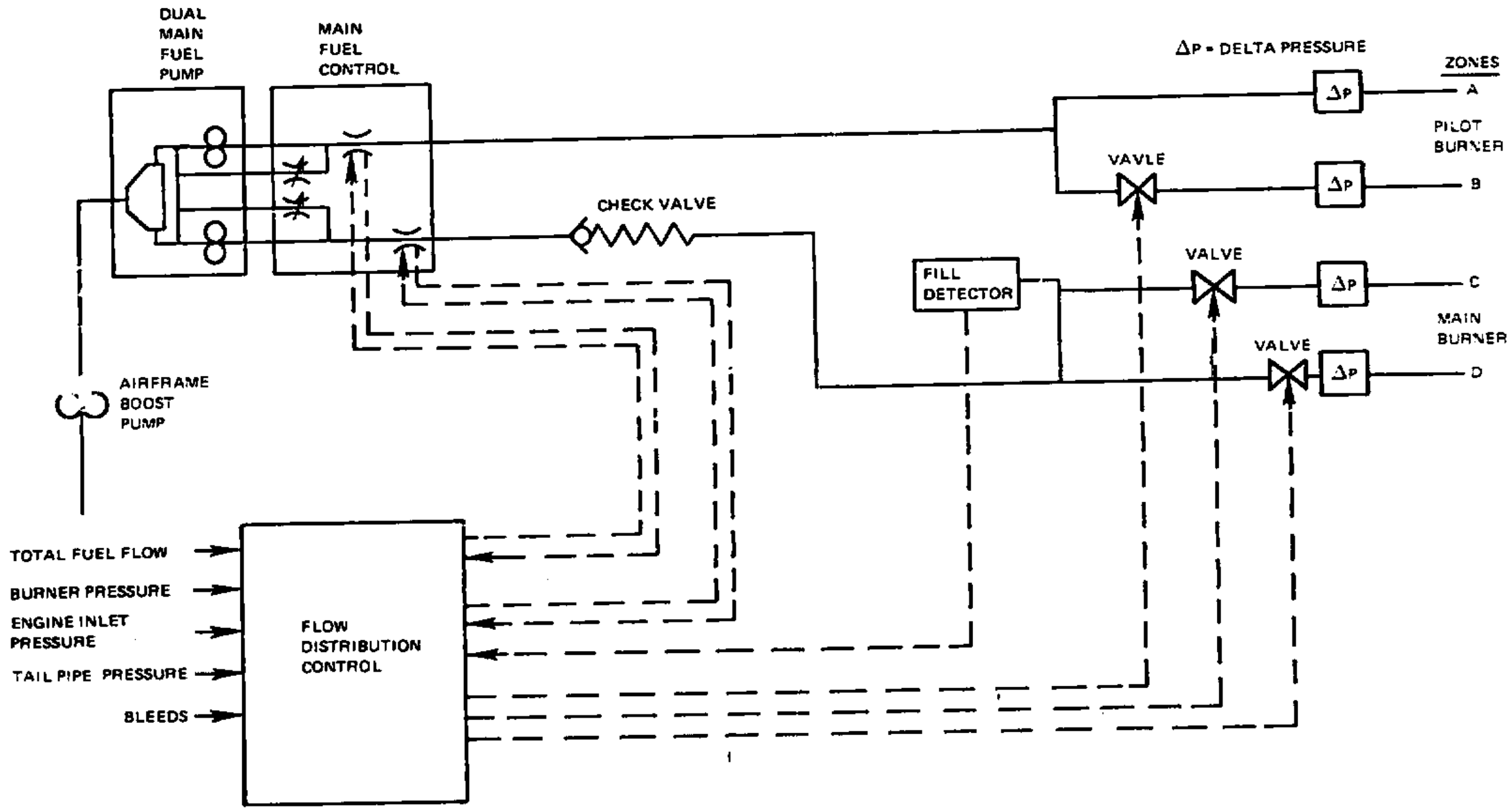
DUAL MAIN FUEL PUMP
MAIN FUEL CONTROL
ΔP = DELTA PRESSURE
ZONES
A
PILOT BURNER
B
C
MAIN BURNER
D
ΔP
VAVLE
VALVE
VALVE
CHECK VALVE
FILL DETECTOR
AIRFRAME BOOST PUMP
TOTAL FUEL FLOW
BURNER PRESSURE
ENGINE INLET PRESSURE
TAIL PIPE PRESSURE
BLEEDS
FLOW DISTRIBUTION CONTROL

*Figure C-24 Control Scheme 2d*

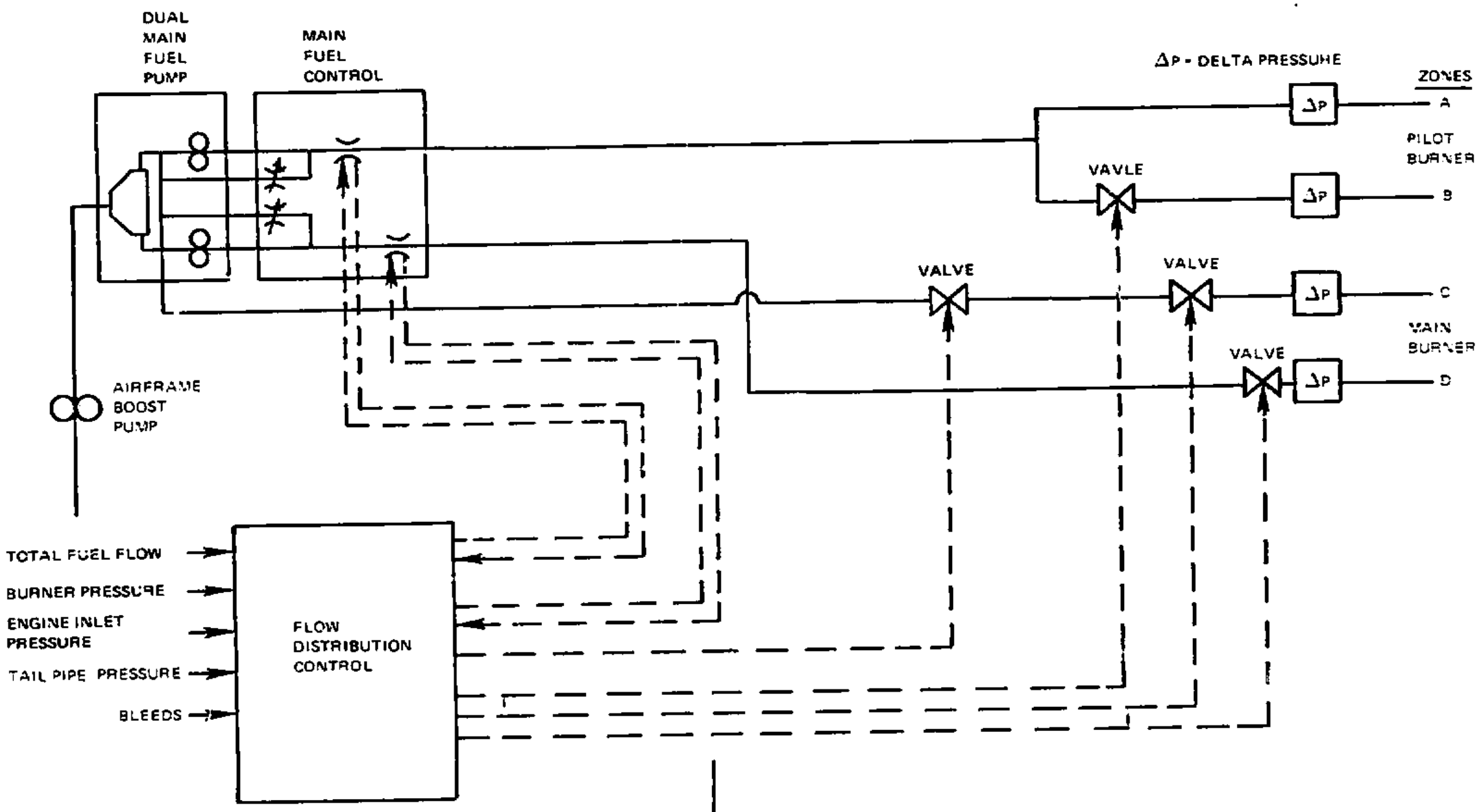
DUAL
MAIN
FUEL
PUMP
MAIN
FUEL
CONTROL
ΔP - DELTA PRESSURE
ZONES
A
PILOT
BURNER
B
C
MAIN
BURNER
D
ΔP
ΔP
ΔP
ΔP
VAVLE
VALVE
VALVE
VALVE
AIRFRAME
BOOST
PUMP
TOTAL FUEL FLOW
BURNER PRESSURE
ENGINE INLET
PRESSURE
TAIL PIPE PRESSURE
BLEEDS
FLOW
DISTRIBUTION
CONTROL

*Figure C-25* Control Scheme 2e

ORIGINAL PAGE IS
OF POOR QUALITY

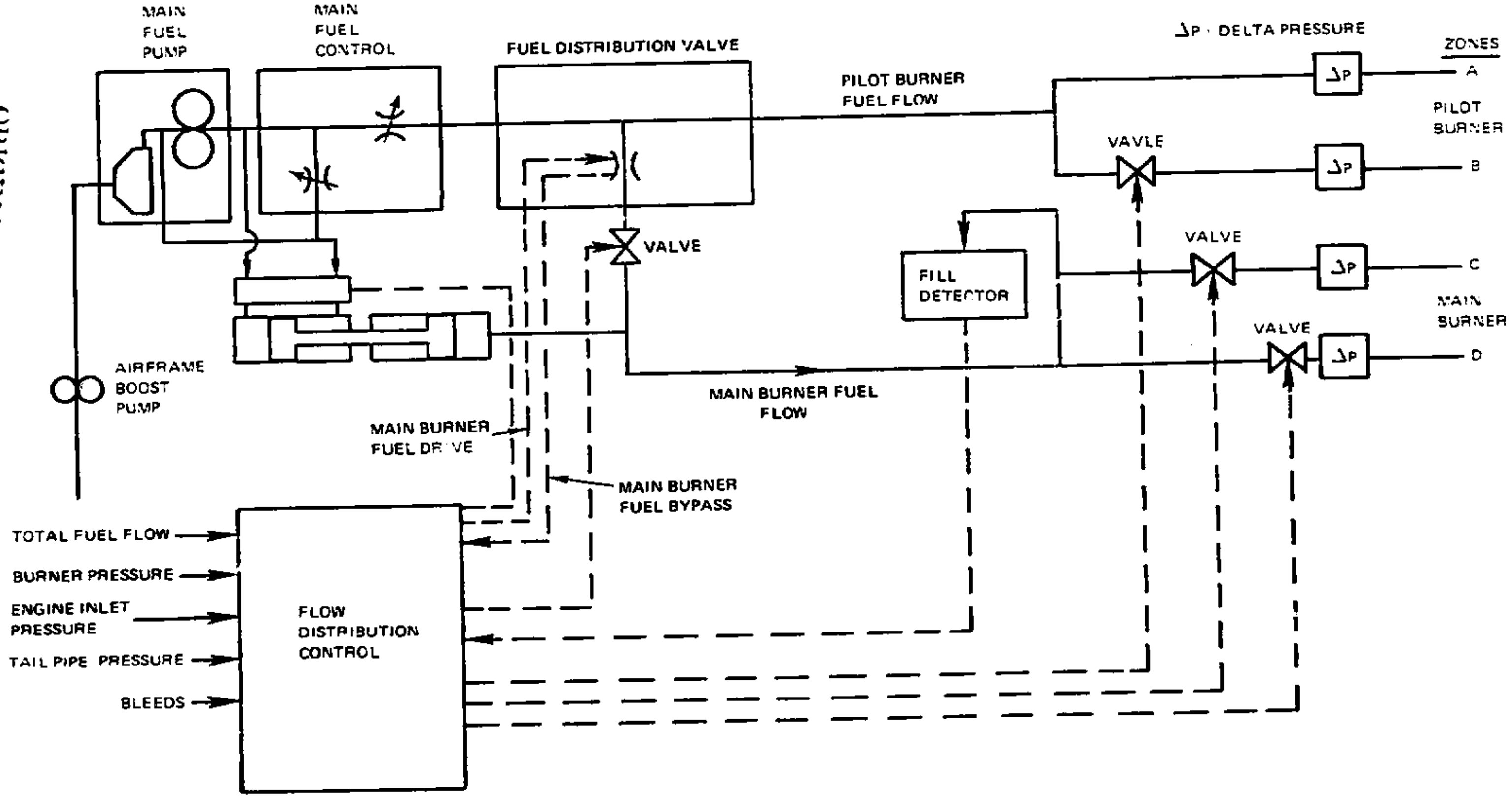
MAIN FUEL PUMP
MAIN FUEL CONTROL
FUEL DISTRIBUTION VALVE
ΔP · DELTA PRESSURE
ZONES
A
PILOT BURNER
B
C
MAIN BURNER
D
PILOT BURNER FUEL FLOW
VAVLE
VALVE
VALVE
ΔP
ΔP
ΔP
ΔP
FILL DETECTOR
VALVE
MAIN BURNER FUEL FLOW
AIRFRAME BOOST PUMP
MAIN BURNER FUEL DRIVE
MAIN BURNER FUEL BYPASS
TOTAL FUEL FLOW
BURNER PRESSURE
ENGINE INLET PRESSURE
TAIL PIPE PRESSURE
BLEEDS
FLOW DISTRIBUTION CONTROL

*Figure C-26* *Control Scheme 2f*

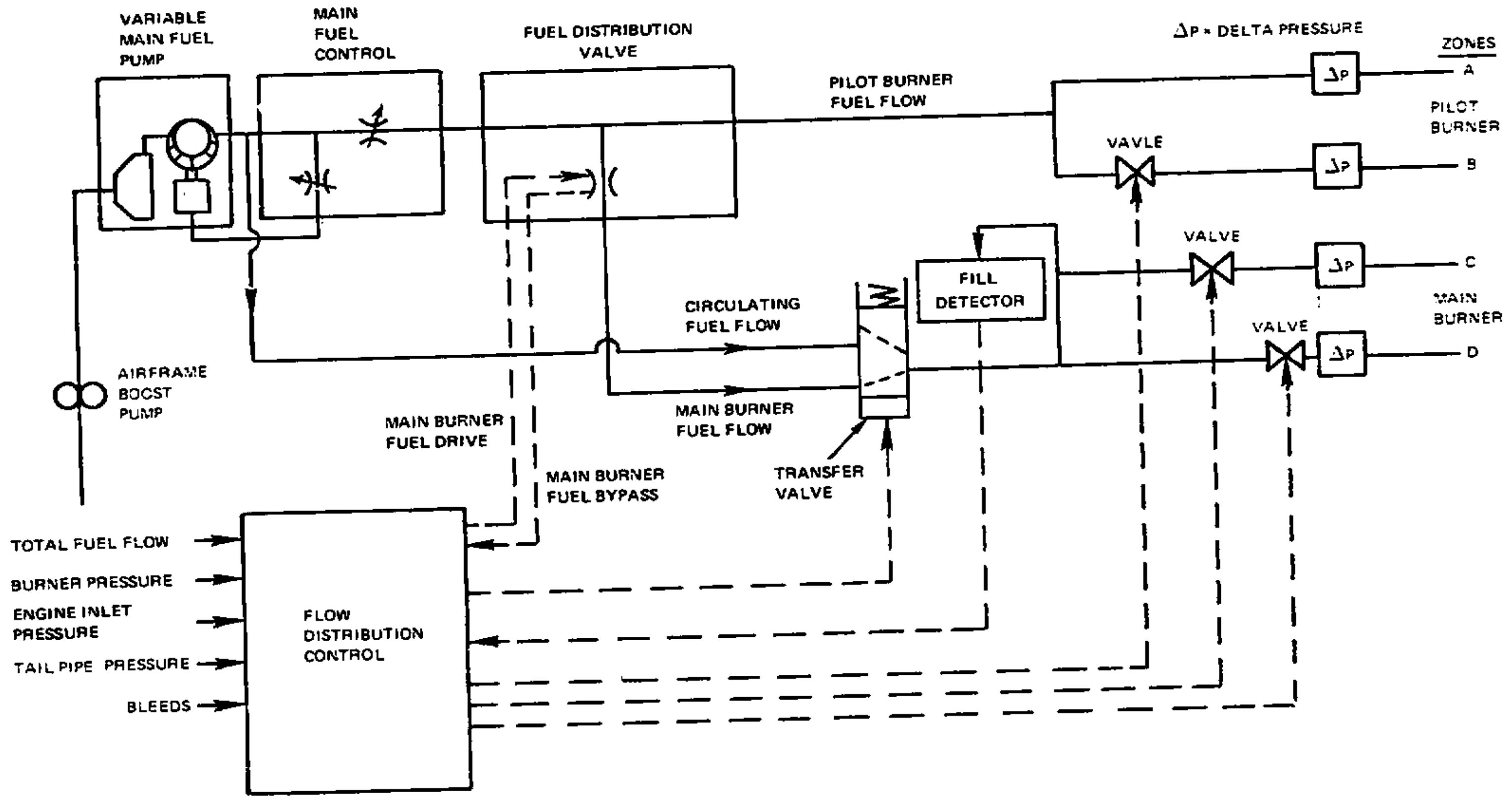
VARIABLE MAIN FUEL PUMP
MAIN FUEL CONTROL
FUEL DISTRIBUTION VALVE
ΔP = DELTA PRESSURE
ZONES
A
PILOT BURNER
B
C
MAIN BURNER
D
PILOT BURNER FUEL FLOW
VAVLE
VALVE
VALVE
ΔP
FILL DETECTOR
CIRCULATING FUEL FLOW
MAIN BURNER FUEL FLOW
TRANSFER VALVE
AIRFRAME BOOST PUMP
MAIN BURNER FUEL DRIVE
MAIN BURNER FUEL BYPASS
TOTAL FUEL FLOW
BURNER PRESSURE
ENGINE INLET PRESSURE
TAIL PIPE PRESSURE
BLEEDS
FLOW DISTRIBUTION CONTROL

*Figure C-27 Control Scheme 3a*

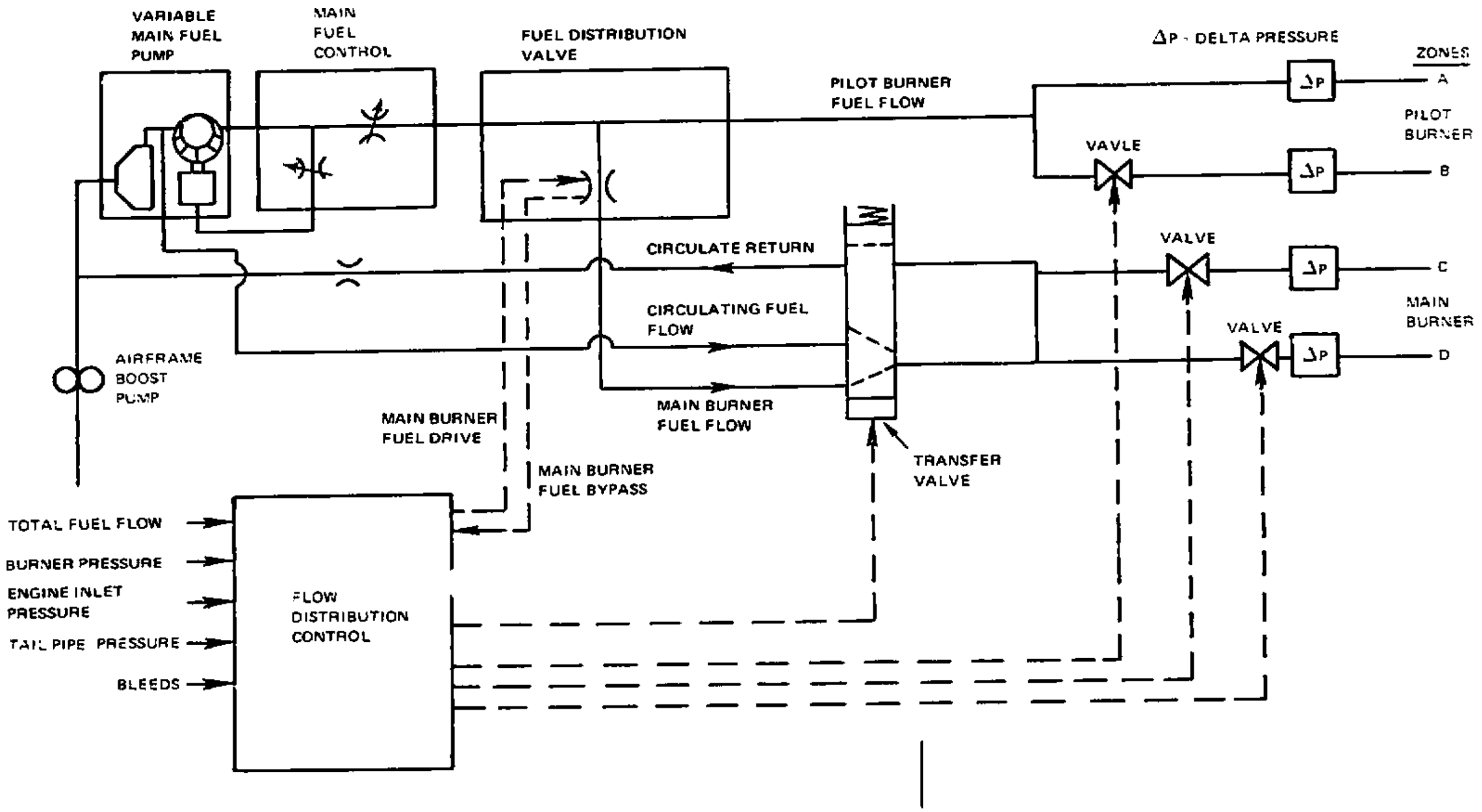
VARIABLE MAIN FUEL PUMP
MAIN FUEL CONTROL
FUEL DISTRIBUTION VALVE
ΔP - DELTA PRESSURE
ZONES
A
PILOT BURNER
B
C
MAIN BURNER
D
PILOT BURNER FUEL FLOW
VAVLE
VALVE
VALVE
ΔP
ΔP
ΔP
ΔP
CIRCULATE RETURN
CIRCULATING FUEL FLOW
MAIN BURNER FUEL FLOW
TRANSFER VALVE
AIRFRAME BOOST PUMP
MAIN BURNER FUEL DRIVE
MAIN BURNER FUEL BYPASS
TOTAL FUEL FLOW
BURNER PRESSURE
ENGINE INLET PRESSURE
TAIL PIPE PRESSURE
BLEEDS
FLOW DISTRIBUTION CONTROL

*Figure C-28 Control Scheme 3b*

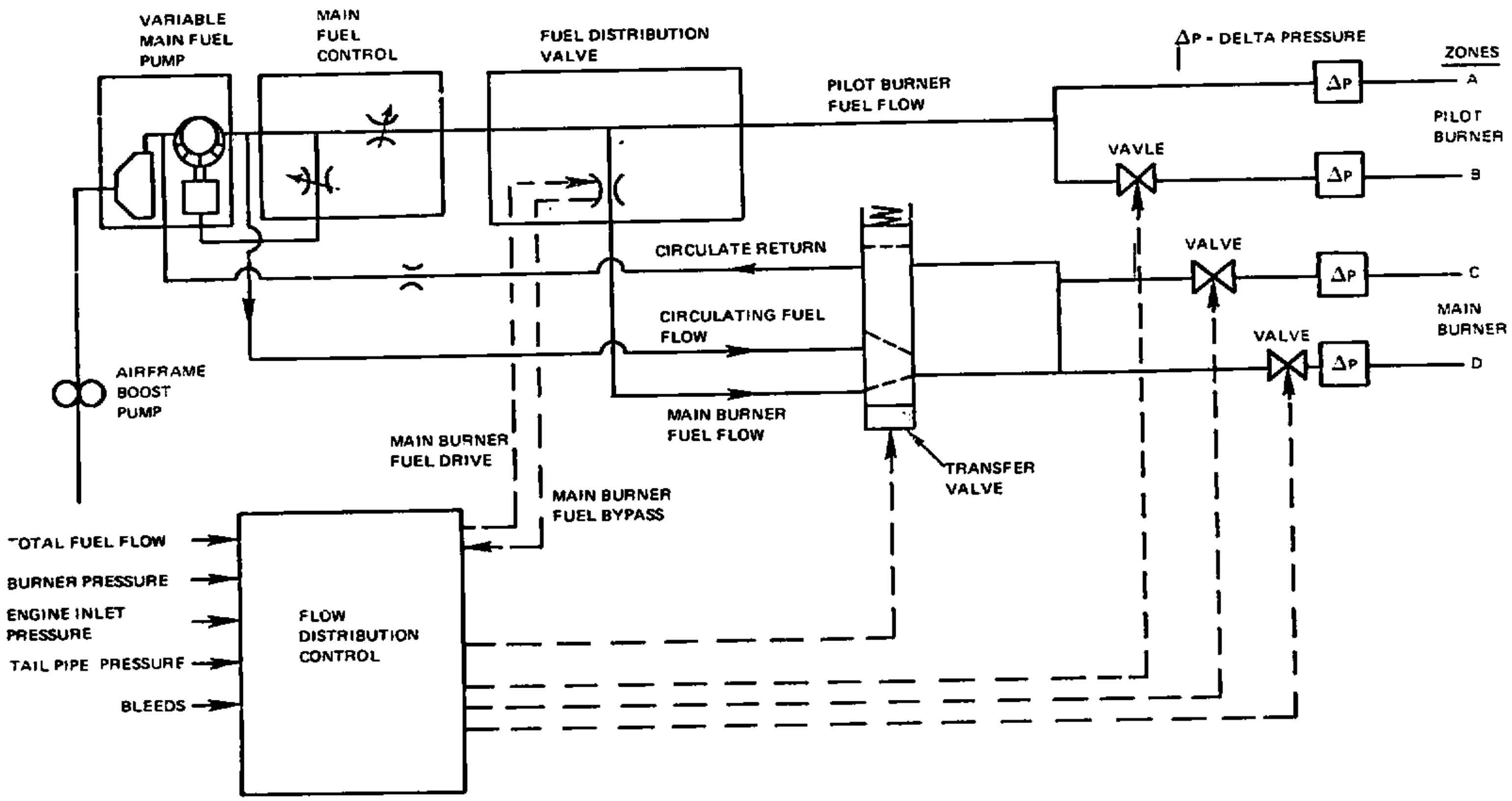
VARIABLE MAIN FUEL PUMP
MAIN FUEL CONTROL
FUEL DISTRIBUTION VALVE
PILOT BURNER FUEL FLOW
ΔP - DELTA PRESSURE
ZONES
A
PILOT BURNER
B
C
MAIN BURNER
D
ΔP
VAVLE
VALVE
VALVE
CIRCULATE RETURN
CIRCULATING FUEL FLOW
MAIN BURNER FUEL FLOW
TRANSFER VALVE
AIRFRAME BOOST PUMP
MAIN BURNER FUEL DRIVE
MAIN BURNER FUEL BYPASS
FLOW DISTRIBUTION CONTROL
TOTAL FUEL FLOW
BURNER PRESSURE
ENGINE INLET PRESSURE
TAIL PIPE PRESSURE
BLEEDS

Figure C-29 Control Scheme 3c

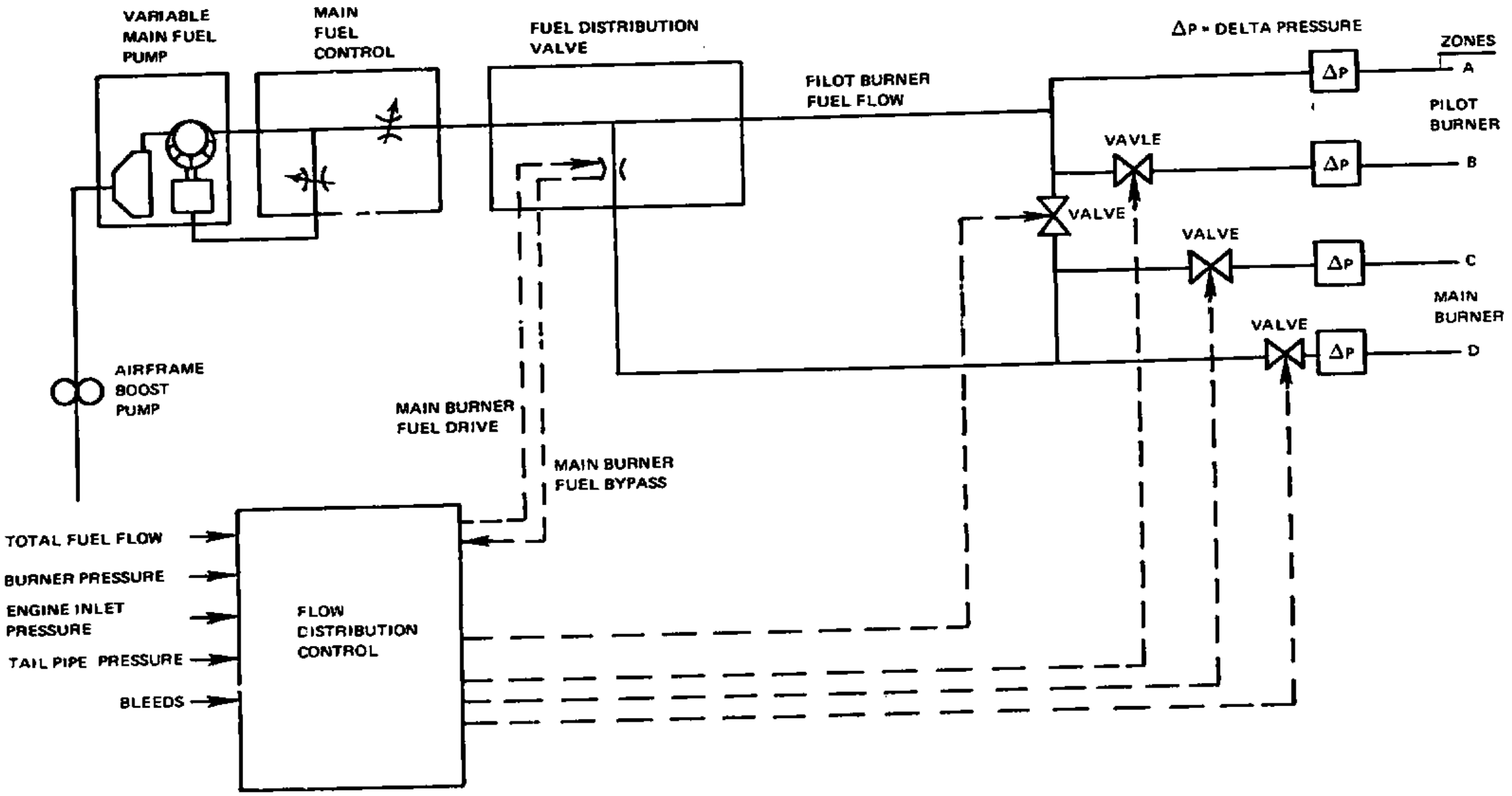
VARIABLE MAIN FUEL PUMP
MAIN FUEL CONTROL
FUEL DISTRIBUTION VALVE
ΔP = DELTA PRESSURE
ZONES
A
PILOT BURNER
B
C
MAIN BURNER
D
FILOT BURNER FUEL FLOW
VAVLE
VALVE
VALVE
VALVE
ΔP
ΔP
ΔP
ΔP
AIRFRAME BOOST PUMP
MAIN BURNER FUEL DRIVE
MAIN BURNER FUEL BYPASS
TOTAL FUEL FLOW
BURNER PRESSURE
ENGINE INLET PRESSURE
TAIL PIPE PRESSURE
BLEEDS
FLOW DISTRIBUTION CONTROL

*Figure C-30 Control Scheme 3d*

ORIGINAL PAGE IS
OF POOR QUALITY

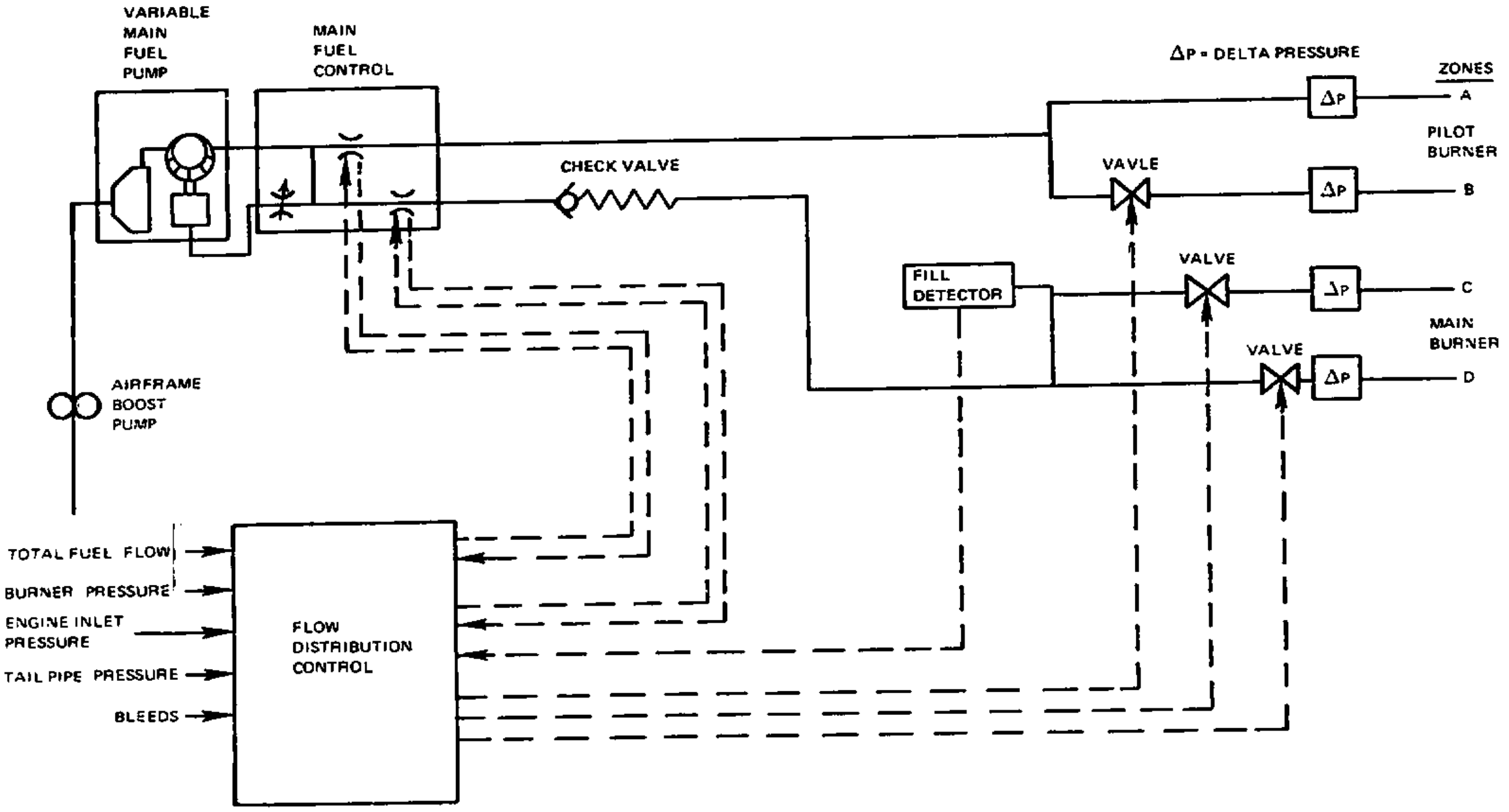

VARIABLE MAIN FUEL PUMP
MAIN FUEL CONTROL
CHECK VALVE
AIRFRAME BOOST PUMP
ΔP = DELTA PRESSURE
ZONES
A
PILOT BURNER
B
VAVLE
VALVE
FILL DETECTOR
C
MAIN BURNER
D
VALVE
ΔP
TOTAL FUEL FLOW
BURNER PRESSURE
ENGINE INLET PRESSURE
TAIL PIPE PRESSURE
BLEEDS
FLOW DISTRIBUTION CONTROL

*Figure C-31* *Control Scheme 3e*

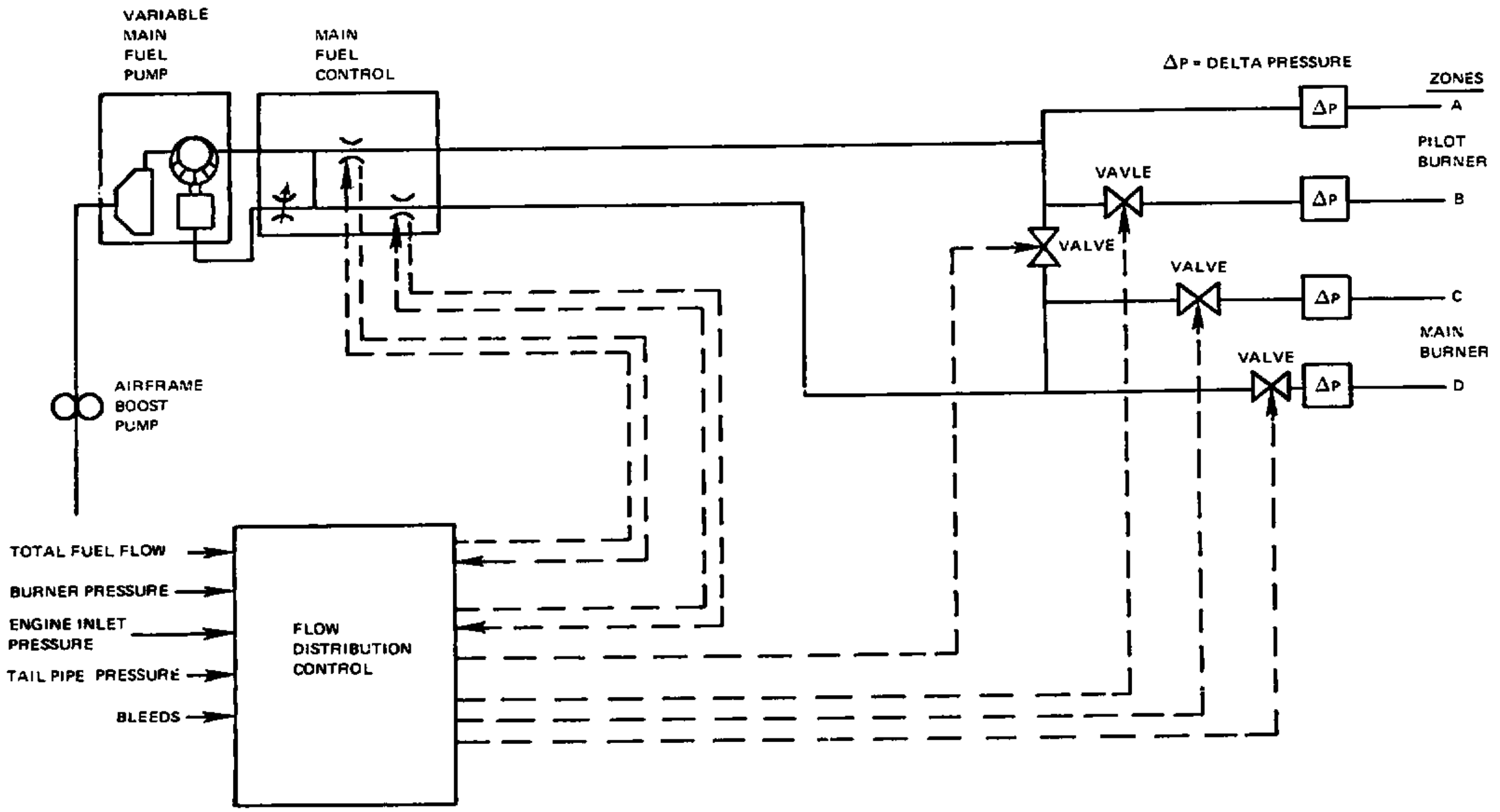
VARIABLE MAIN FUEL PUMP
MAIN FUEL CONTROL
ΔP = DELTA PRESSURE
ZONES
A
PILOT BURNER
B
C
MAIN BURNER
D
ΔP
ΔP
ΔP
ΔP
VAVLE
VALVE
VALVE
VALVE
AIRFRAME BOOST PUMP
TOTAL FUEL FLOW
BURNER PRESSURE
ENGINE INLET PRESSURE
TAIL PIPE PRESSURE
BLEEDS
FLOW DISTRIBUTION CONTROL

*Figure C-32 Control Scheme 3f*

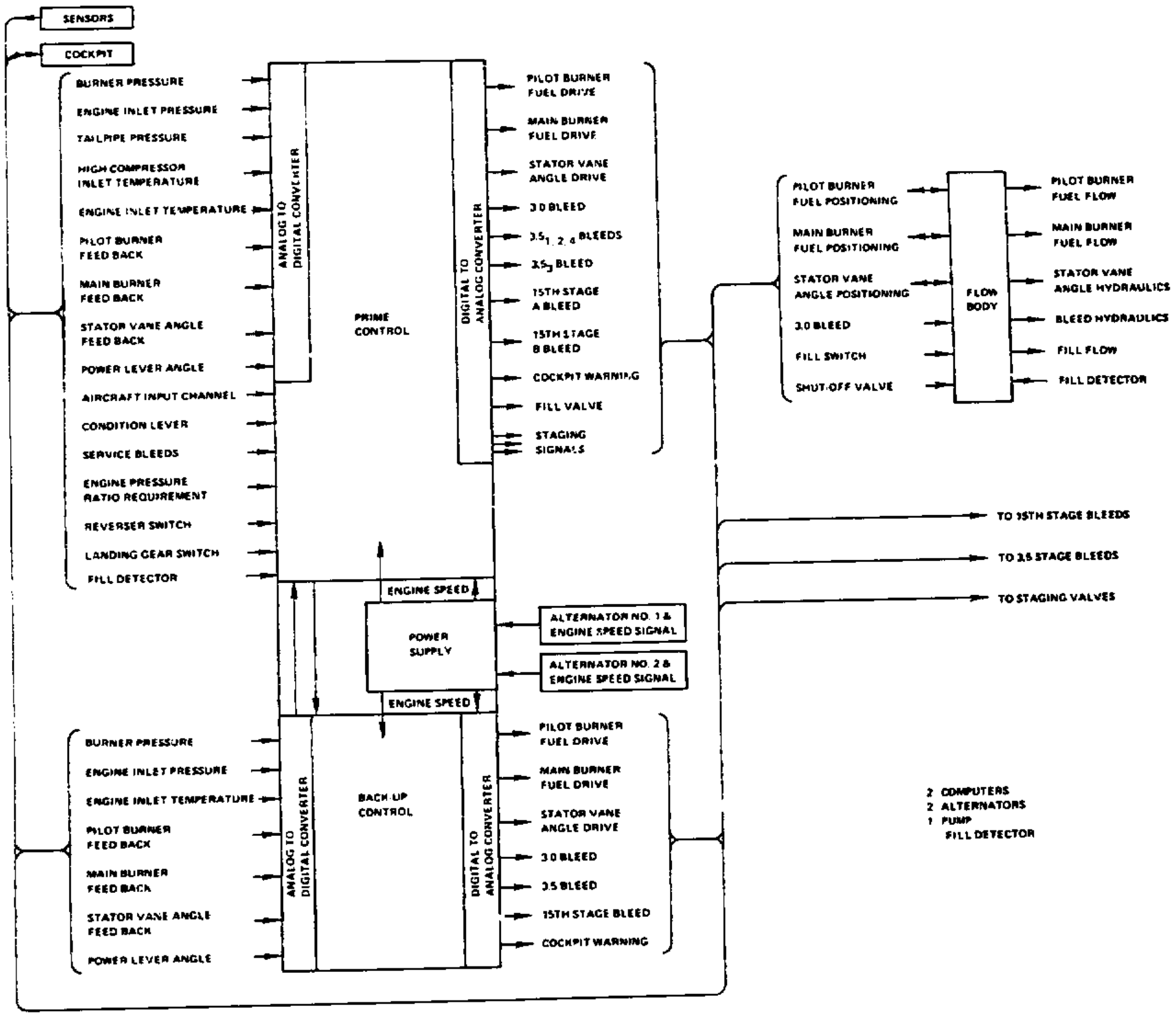
SENSORS
COCKPIT
BURNER PRESSURE
ENGINE INLET PRESSURE
TAILPIPE PRESSURE
HIGH COMPRESSOR INLET TEMPERATURE
ENGINE INLET TEMPERATURE
PILOT BURNER FEED BACK
MAIN BURNER FEED BACK
STATOR VANE ANGLE FEED BACK
POWER LEVER ANGLE
AIRCRAFT INPUT CHANNEL
CONDITION LEVER
SERVICE BLEEDS
ENGINE PRESSURE RATIO REQUIREMENT
REVERSER SWITCH
LANDING GEAR SWITCH
FILL DETECTOR
ANALOG TO DIGITAL CONVERTER
PRIME CONTROL
DIGITAL TO ANALOG CONVERTER
PILOT BURNER FUEL DRIVE
MAIN BURNER FUEL DRIVE
STATOR VANE ANGLE DRIVE
3.0 BLEED
3.5$_{1,2,4}$ BLEEDS
3.5$_3$ BLEED
15TH STAGE A BLEED
15TH STAGE B BLEED
COCKPIT WARNING
FILL VALVE
STAGING SIGNALS
PILOT BURNER FUEL POSITIONING
MAIN BURNER FUEL POSITIONING
STATOR VANE ANGLE POSITIONING
3.0 BLEED
FILL SWITCH
SHUT-OFF VALVE
FLOW BODY
PILOT BURNER FUEL FLOW
MAIN BURNER FUEL FLOW
STATOR VANE ANGLE HYDRAULICS
BLEED HYDRAULICS
FILL FLOW
FILL DETECTOR
TO 15TH STAGE BLEEDS
TO 3.5 STAGE BLEEDS
TO STAGING VALVES
ENGINE SPEED
POWER SUPPLY
ENGINE SPEED
ALTERNATOR NO. 1 & ENGINE SPEED SIGNAL
ALTERNATOR NO. 2 & ENGINE SPEED SIGNAL
BURNER PRESSURE
ENGINE INLET PRESSURE
ENGINE INLET TEMPERATURE
PILOT BURNER FEED BACK
MAIN BURNER FEED BACK
STATOR VANE ANGLE FEED BACK
POWER LEVER ANGLE
ANALOG TO DIGITAL CONVERTER
BACK UP CONTROL
DIGITAL TO ANALOG CONVERTER
PILOT BURNER FUEL DRIVE
MAIN BURNER FUEL DRIVE
STATOR VANE ANGLE DRIVE
3.0 BLEED
3.5 BLEED
15TH STAGE BLEED
COCKPIT WARNING
2 COMPUTERS
2 ALTERNATORS
1 PUMP
FILL DETECTOR

*Figure C-33 1985 Technology Control Scheme A*

ORIGINAL PAGE IS
OF POOR QUALITY

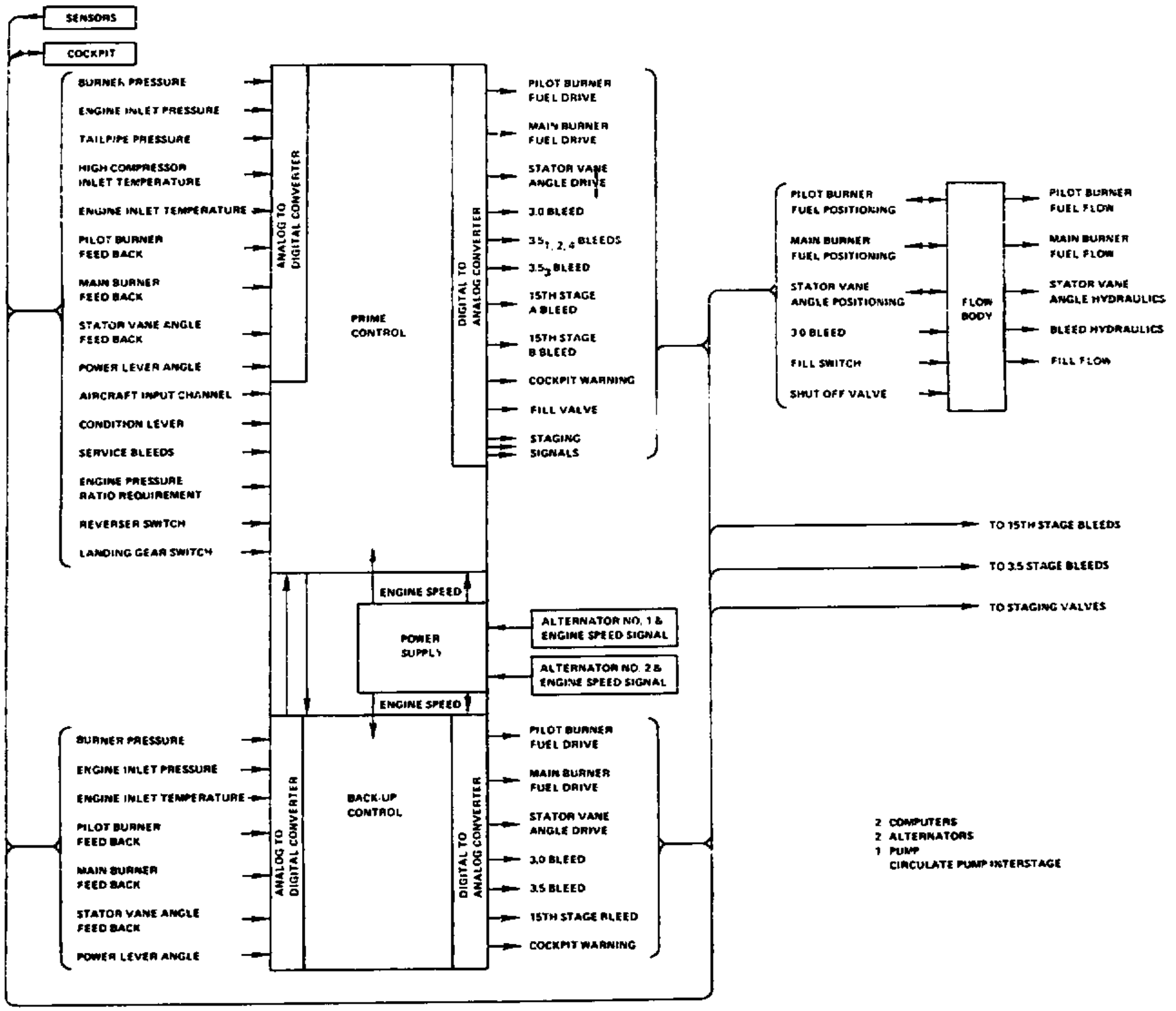
SENSORS
COCKPIT
BURNER PRESSURE
ENGINE INLET PRESSURE
TAILPIPE PRESSURE
HIGH COMPRESSOR INLET TEMPERATURE
ENGINE INLET TEMPERATURE
PILOT BURNER FEED BACK
MAIN BURNER FEED BACK
STATOR VANE ANGLE FEED BACK
POWER LEVER ANGLE
AIRCRAFT INPUT CHANNEL
CONDITION LEVER
SERVICE BLEEDS
ENGINE PRESSURE RATIO REQUIREMENT
REVERSER SWITCH
LANDING GEAR SWITCH
ANALOG TO DIGITAL CONVERTER
PRIME CONTROL
DIGITAL TO ANALOG CONVERTER
PILOT BURNER FUEL DRIVE
MAIN BURNER FUEL DRIVE
STATOR VANE ANGLE DRIVE
3.0 BLEED
$3.5_{1,2,4}$ BLEEDS
$3.5_3$ BLEED
15TH STAGE A BLEED
15TH STAGE B BLEED
COCKPIT WARNING
FILL VALVE
STAGING SIGNALS
PILOT BURNER FUEL POSITIONING
MAIN BURNER FUEL POSITIONING
STATOR VANE ANGLE POSITIONING
3.0 BLEED
FILL SWITCH
SHUT OFF VALVE
FLOW BODY
PILOT BURNER FUEL FLOW
MAIN BURNER FUEL FLOW
STATOR VANE ANGLE HYDRAULICS
BLEED HYDRAULICS
FILL FLOW
TO 15TH STAGE BLEEDS
TO 3.5 STAGE BLEEDS
TO STAGING VALVES
ENGINE SPEED
POWER SUPPLY
ENGINE SPEED
ALTERNATOR NO. 1 & ENGINE SPEED SIGNAL
ALTERNATOR NO. 2 & ENGINE SPEED SIGNAL
BURNER PRESSURE
ENGINE INLET PRESSURE
ENGINE INLET TEMPERATURE
PILOT BURNER FEED BACK
MAIN BURNER FEED BACK
STATOR VANE ANGLE FEED BACK
POWER LEVER ANGLE
ANALOG TO DIGITAL CONVERTER
BACK-UP CONTROL
DIGITAL TO ANALOG CONVERTER
PILOT BURNER FUEL DRIVE
MAIN BURNER FUEL DRIVE
STATOR VANE ANGLE DRIVE
3.0 BLEED
3.5 BLEED
15TH STAGE BLEED
COCKPIT WARNING
2 COMPUTERS
2 ALTERNATORS
1 PUMP
CIRCULATE PUMP INTERSTAGE

*Figure C-34 1985 Technology Control Scheme B*

ORIGINAL PAGE IS
OF POOR QUALITY

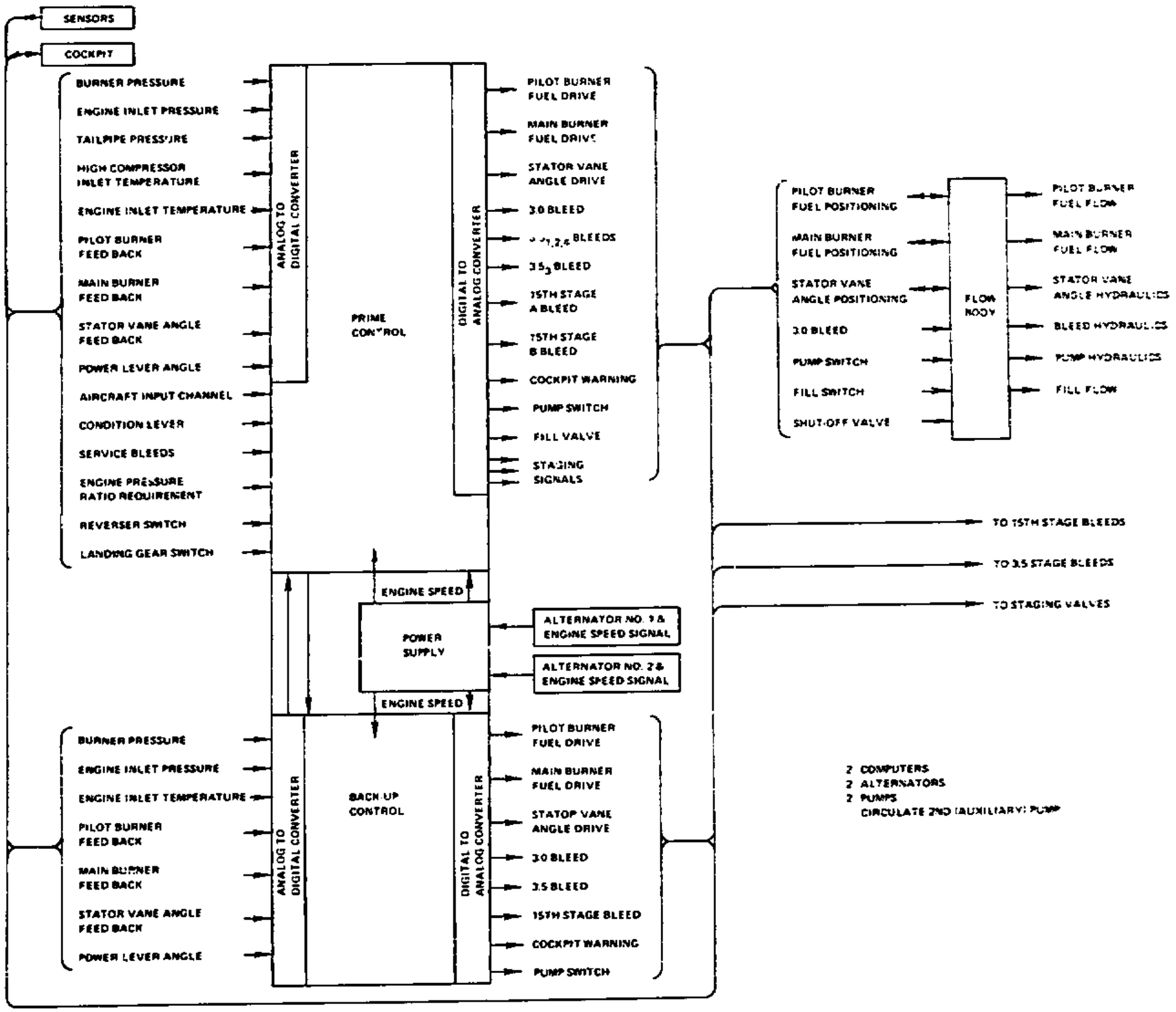
SENSORS
COCKPIT
BURNER PRESSURE
ENGINE INLET PRESSURE
TAILPIPE PRESSURE
HIGH COMPRESSOR INLET TEMPERATURE
ENGINE INLET TEMPERATURE
PILOT BURNER FEED BACK
MAIN BURNER FEED BACK
STATOR VANE ANGLE FEED BACK
POWER LEVER ANGLE
AIRCRAFT INPUT CHANNEL
CONDITION LEVER
SERVICE BLEEDS
ENGINE PRESSURE RATIO REQUIREMENT
REVERSER SWITCH
LANDING GEAR SWITCH
ANALOG TO DIGITAL CONVERTER
PRIME CONTROL
DIGITAL TO ANALOG CONVERTER
PILOT BURNER FUEL DRIVE
MAIN BURNER FUEL DRIVE
STATOR VANE ANGLE DRIVE
3.0 BLEED
1,2,4 BLEEDS
3.5₃ BLEED
15TH STAGE A BLEED
15TH STAGE B BLEED
COCKPIT WARNING
PUMP SWITCH
FILL VALVE
STAGING SIGNALS
ENGINE SPEED
POWER SUPPLY
ALTERNATOR NO. 1 & ENGINE SPEED SIGNAL
ALTERNATOR NO. 2 & ENGINE SPEED SIGNAL
ENGINE SPEED
BURNER PRESSURE
ENGINE INLET PRESSURE
ENGINE INLET TEMPERATURE
PILOT BURNER FEED BACK
MAIN BURNER FEED BACK
STATOR VANE ANGLE FEED BACK
POWER LEVER ANGLE
ANALOG TO DIGITAL CONVERTER
BACK UP CONTROL
DIGITAL TO ANALOG CONVERTER
PILOT BURNER FUEL DRIVE
MAIN BURNER FUEL DRIVE
STATOR VANE ANGLE DRIVE
3.0 BLEED
3.5 BLEED
15TH STAGE BLEED
COCKPIT WARNING
PUMP SWITCH
PILOT BURNER FUEL POSITIONING
MAIN BURNER FUEL POSITIONING
STATOR VANE ANGLE POSITIONING
3.0 BLEED
PUMP SWITCH
FILL SWITCH
SHUT-OFF VALVE
FLOW BODY
PILOT BURNER FUEL FLOW
MAIN BURNER FUEL FLOW
STATOR VANE ANGLE HYDRAULICS
BLEED HYDRAULICS
PUMP HYDRAULICS
FILL FLOW
TO 15TH STAGE BLEEDS
TO 3.5 STAGE BLEEDS
TO STAGING VALVES
2 COMPUTERS
2 ALTERNATORS
2 PUMPS
CIRCULATE 2ND (AUXILIARY) PUMP

*Figure C-35 1985 Technology Control Scheme C*

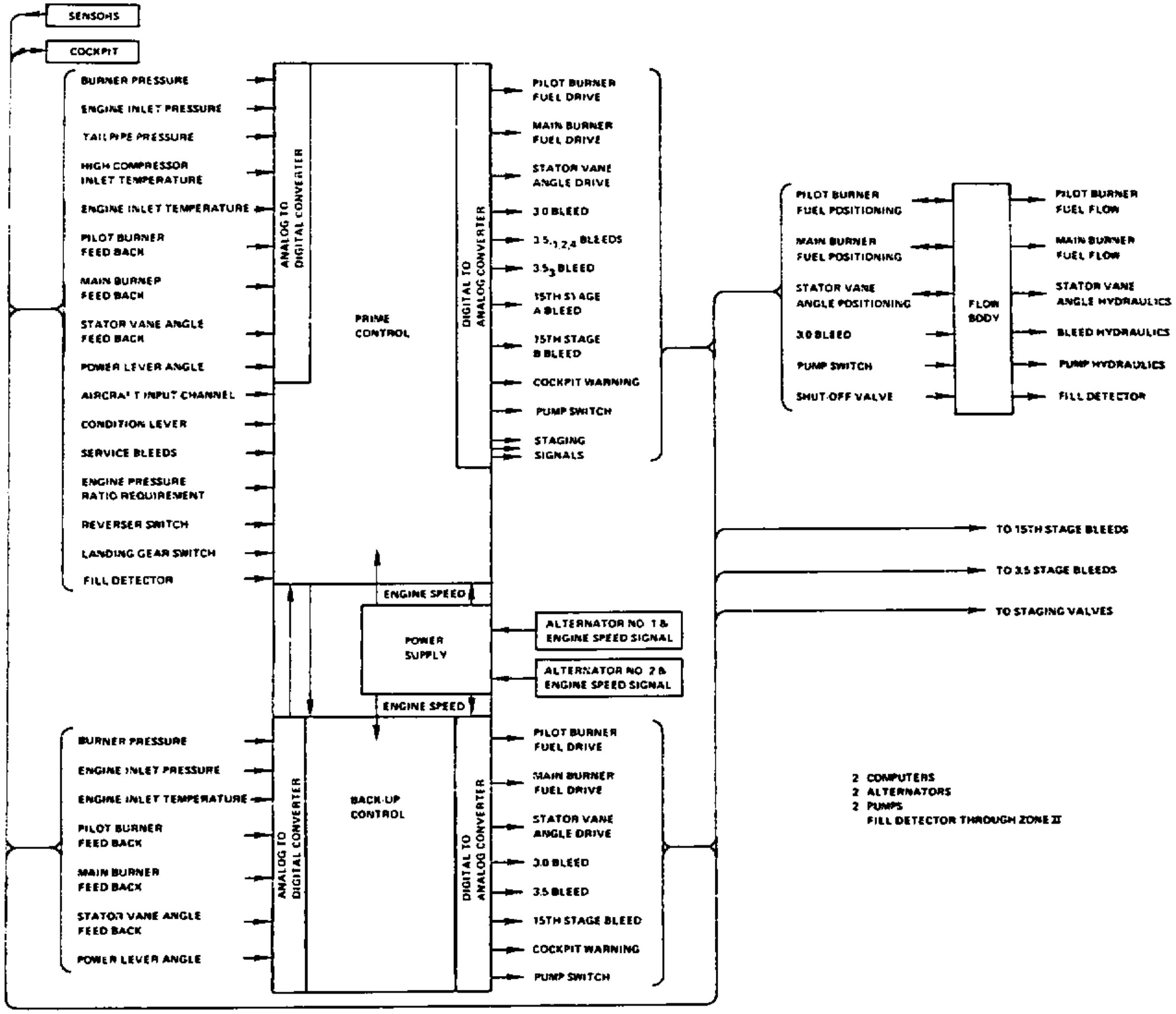
SENSORS
COCKPIT
BURNER PRESSURE
ENGINE INLET PRESSURE
TAILPIPE PRESSURE
HIGH COMPRESSOR INLET TEMPERATURE
ENGINE INLET TEMPERATURE
PILOT BURNER FEED BACK
MAIN BURNER FEED BACK
STATOR VANE ANGLE FEED BACK
POWER LEVER ANGLE
AIRCRAFT INPUT CHANNEL
CONDITION LEVER
SERVICE BLEEDS
ENGINE PRESSURE RATIO REQUIREMENT
REVERSER SWITCH
LANDING GEAR SWITCH
FILL DETECTOR
ANALOG TO DIGITAL CONVERTER
PRIME CONTROL
DIGITAL TO ANALOG CONVERTER
PILOT BURNER FUEL DRIVE
MAIN BURNER FUEL DRIVE
STATOR VANE ANGLE DRIVE
3.0 BLEED
3.5$_{1,2,4}$ BLEEDS
3.5$_3$ BLEED
15TH STAGE A BLEED
15TH STAGE B BLEED
COCKPIT WARNING
PUMP SWITCH
STAGING SIGNALS
ENGINE SPEED
POWER SUPPLY
ENGINE SPEED
ALTERNATOR NO 1 & ENGINE SPEED SIGNAL
ALTERNATOR NO 2 & ENGINE SPEED SIGNAL
BURNER PRESSURE
ENGINE INLET PRESSURE
ENGINE INLET TEMPERATURE
PILOT BURNER FEED BACK
MAIN BURNER FEED BACK
STATOR VANE ANGLE FEED BACK
POWER LEVER ANGLE
ANALOG TO DIGITAL CONVERTER
BACK-UP CONTROL
DIGITAL TO ANALOG CONVERTER
PILOT BURNER FUEL DRIVE
MAIN BURNER FUEL DRIVE
STATOR VANE ANGLE DRIVE
3.0 BLEED
3.5 BLEED
15TH STAGE BLEED
COCKPIT WARNING
PUMP SWITCH
PILOT BURNER FUEL POSITIONING
MAIN BURNER FUEL POSITIONING
STATOR VANE ANGLE POSITIONING
3.0 BLEED
PUMP SWITCH
SHUT-OFF VALVE
FLOW BODY
PILOT BURNER FUEL FLOW
MAIN BURNER FUEL FLOW
STATOR VANE ANGLE HYDRAULICS
BLEED HYDRAULICS
PUMP HYDRAULICS
FILL DETECTOR
TO 15TH STAGE BLEEDS
TO 3.5 STAGE BLEEDS
TO STAGING VALVES
2 COMPUTERS
2 ALTERNATORS
2 PUMPS
FILL DETECTOR THROUGH ZONE II

*Figure C-36 1985 Technology Control Scheme D*

ORIGINAL PAGE IS
OF POOR QUALITY

# APPENDIX D

# NOMENCLATURE

PRECEDING PAGE BLANK NOT FILMED

## NOMENCLATURE

| | |
|---|---|
| EI | Emission Index ~ g pollutant/kg fuel |
| F/A | kg fuel/kg air ir |
| H | Specific Humidity ~ $gH_2O$/ kg dry air |
| LBO | Lean Blowout |
| P | Pressure ~ atm |
| PF | Pattern Factor |
| $\Delta P$ | Pressure Loss ~ atm |
| T | Temperature ~ K |
| V | Velocity ~ m/s |
| Vref | Combustor Reference Velocity ~ m/s |
| Wa | Airflow ~ kg/s |
| Wf | Fuel Flow ~ kg/s |
| M | Flow Parameter ~ $kg\sqrt{K}/m^2$ atm s |
| $\delta$ | Density ~ $kg/m^3$ |
| $\eta_c$ | Combustion Efficiency |
| $\phi$, ER | Equivalence Ratio |

## SUBSCRIPTS

| | |
|---|---|
| b | Burner |
| s | Static Conditions |
| t | Total Condition |
| 4 | Compressor Exit Station (JT9D-7) |
| 5 | Turbine Inlet Station (JT9D-7) |

# APPENDIX E

# REFERENCES

## REFERENCES

1. Environmental Protection Agency, "Control of Air Pollution From Aircraft and Aircraft Engines; Emission Standards and Test Procedures for Aircraft," Federal Register 38 (136) Part II: 19076, July 13, 1973.

2. Odgers, J., and Carrier, C., "Modeling of Gas Turbine Combustors; Consideration of Combustor Efficiency and Stability," ASME 72 WA&GT-1, September 1972.

3. Sarli, V. J., Eiler, D. C., and Marshall, R. L., "Effects of Operating Variables on Gaseous Emissions," APCA Conference, New Orleans, Louisiana, October 26-28, 1975.

4. Code of Federal Aviation Regulations, Part 33, "Airworthiness Standards: Aircraft Engines," Subpart E, Paragraph 33.73, Power or Thrust Response, January 1, 1974.