TRW

CR 151751

(NASA-CR-151751) TDRSS SYSTEM CONFIGURATION STUDY FOR SPACE SHUTTLE PROGRAM Final Report (Solarex Corp., Rockville, Md.) 88 p CSCL 22B N78-29140 Unclas 00/16 27221

[redacted]

(NASA-CR-151751) TDRSS SYSTEM CONFIGURATION STUDY FOR SPACE SHUTTLE PROGRAM Final Report (TRW Defense and Space Systems Group) 117 p HC A06/MF A01 CSCL 22B N79-10117 Unclas G3/16 35982

AUG 1978 RECEIVED NASA STI FACILITY

NOV 1978 RECEIVED NASA STI FACILITY

TRW

DEFENSE AND SPACE SYSTEMS GROUP

One Space Park · Redondo Beach, California 90278

TDRSS SYSTEM CONFIGURATION STUDY
FOR
SPACE SHUTTLE PROGRAM
NASA TASK 501

FINAL REPORT

JUNE 1978

Prepared for

NATIONAL AERONAUTICS AND SPACE ADMINISTRATION
LYNDON B. JOHNSON SPACE CENTER
HOUSTON, TEXAS

UNDER CONTRACT NO. NAS 9-15303

TRW
DEFENSE AND SPACE SYSTEMS GROUP
ONE SPACE PARK · REDONDO BEACH · CALIFORNIA 90278

1. INTRODUCTION

This report is prepared for NASA Lyndon B. Johnson Space Center (JSC) in partial fulfillment of NASA contract NAS-915303 (TDRS System configuration definition study).[1] The total engineering manpower expended on this study is equivalent to three manmonths. However, the period of this study was extended over more than nine months to take advantage of the work done in the TDRSS Program. The technical results of this study are presented in this report.

This study is conducted as part of NASA TASK 501 Test Program which was set up to assure that operation of the shuttle orbiter communications systems meet the program requirements when subject to electrical condition similar to those which will be encountered during the operational mission.[2,3,4] The test program intends to implement an integrated test bed (as pictured in Figure 1-1) consisting of applicable orbiter, EVA, payload simulator, STDN, and AF/SCF as well as the TDRSS equipment. The stated intention of TASK 501 Program is to configure the test bed with prototype hardware for system development test and production hardware for system verification test. In case of TDRSS when the hardware is not available, simulators whose functional performance is certified to meet appropriate end item specification will be used. The original purpose of the study was to define this TASK 501 TDRSS Simulator with the use of actual operational TDRSS hardware. However, as the study progresses the study objective had to be scaled down to that of verifying the adequacy of the existing TDRSS Simulator and the NASA proposed modification. This change in scope was imposed by NASA because of the budgetary constraint.

The study was conducted in two steps as follows: first the functional requirements of the TDRSS hardware needed to construct a test system for TDRSS/Space Shuttle link were defined. This functional requirement task basically identifies the TDRSS functions needed to complete a TDRSS/Space Shuttle link with the existing Space Shuttle equipment now available; the results are shown in Section 2. Second, the existing TDRSS simulators and

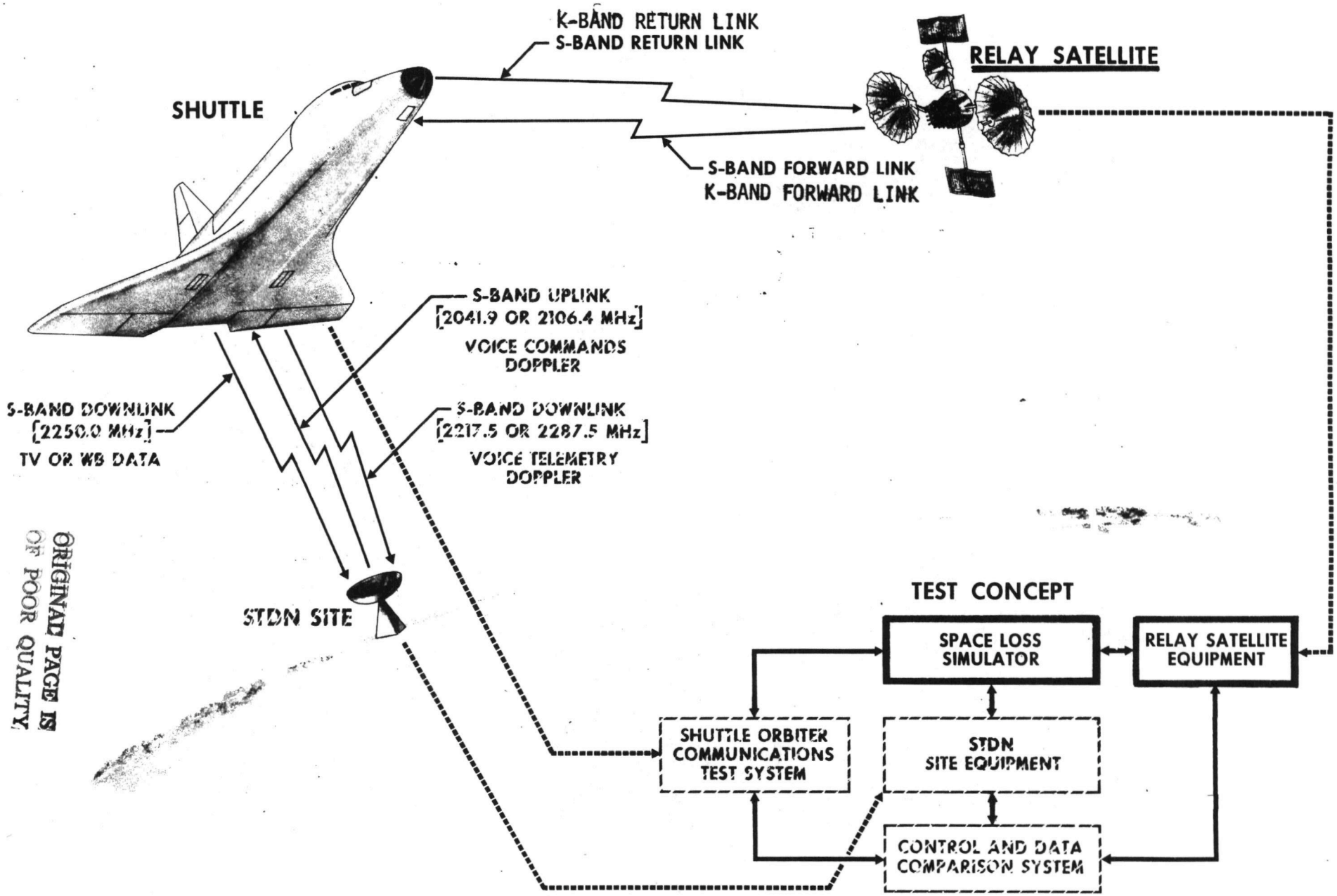

Figure 1-1. Shuttle Communications System Compatibility and Performance Test

ORIGINAL PAGE IS OF POOR QUALITY

the proposed modification (both the space and the ground segment) were then examined and compared to the TDRSS specifications and/or calculated performance data; results are presented in Section 3.

The study has essentially achieved the modified objective. Even though the existing TDRSS Simulator was built prior to the award of the TDRSS Program, it provides the basic functions required. However, some details are significantly different from the actual system performance and/or specification. With the proposed modification the Proposed TASK 501 TDRSS Simulator will be able to perform the TDRSS functions for the Space Shuttle. Any gross system error in TDRSS will show up in the TASK 501 TDRSS Simulator. However, there are significant quantitative differences in the performance of the TASK 501 TDRSS Simulator and the actual TDRSS operational system. Nevertheless, for the limited funding, the proposed simulator represents the best solution of evaluating the use of TDRSS for Space Shuttle.

The TDRSS Program is still being designed; Critical Design Review for many of the subsystems and components have not yet been held; design changes may be made. The information provided in this report is current as of April 1978, but does not necessarily represent those in the ultimate TDRSS system. For this reason, it is recommended that ESL continually monitor the progress of the TDRSS Program and update the Simulator as necessary.

2. TDRSS CONFIGURATION FOR SHUTTLE

The Space Shuttle will have at its disposal a large number of RF links to communicate with the NASA ground facilities. As depicted in Figure 2-1, these links include those through the Tracking and Data Relay Satellite System (TDRSS), STDN, and SCF.[1] STDN and SCF are existing systems; whereas, TDRSS is presently being designed as a joint effort by Western Union, TRW, and Harris. Western Union is the prime contractor; TRW is responsible for overall system design, the satellites and their payload plus part of the ground station; and Harris is providing the RF and signal processing portion of the ground station.

In this section, a brief description of the TDRSS when it is utilized to support the Space Shuttle Vehicle is presented as the basis for this report. The description will be limited to only those TDRSS capabilities being utilized for the Shuttle; other TDRSS capabilities will not be discussed.

The TDRSS is comprised of a ground station and three identical satellites, referred to as East, West, and an On-Orbit spare. Each satellite is configured to provide Space Shuttle with two distinct classes of service:

1) S-band single access (SSA) — two identical, duplex, S-band single access channels

2) K-band single access (KSA) — two identical, duplex, K-band single access channels.

The TDRSS and Shuttle link utilizes two 4.9 meter diameter, parabolic mesh reflector antennas in each TDRSS satellite. Each dish accommodates a combined S-band and K-band feed. Considering the three satellites, the total capacity is six channels of KSA-SSA communication service; sharing of the reflector will place a constraint on operating the KSA and SSA channels as a pair pointing in the same direction.

2.1 SSA SERVICE

The SSA service processing equipment chain between the Shuttle (or other user satellite) and TDRSS data interface is presented in Figure 2-2.[5]

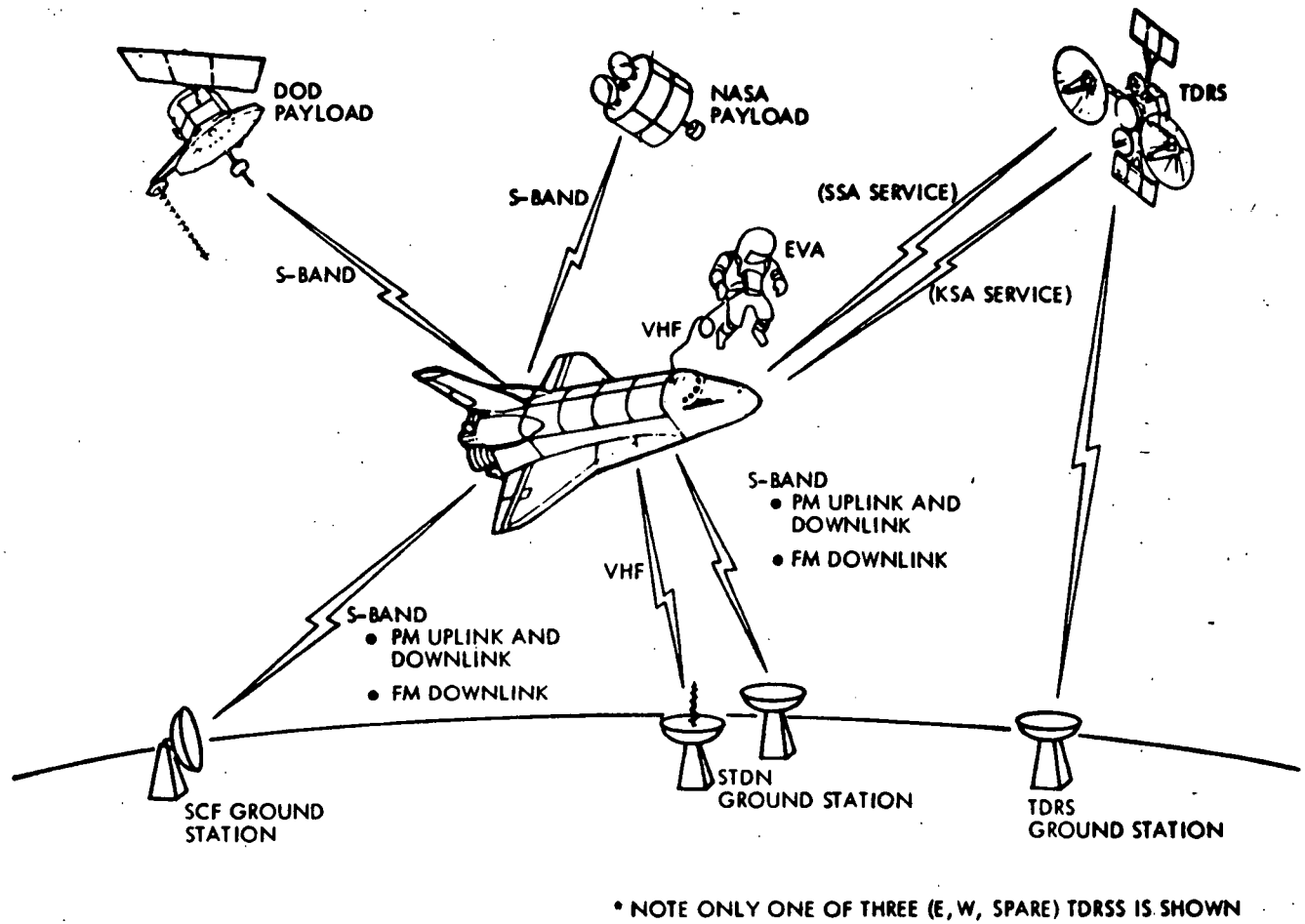

Figure 2-1. RF Link Configuration

ORIGINAL PAGE IS
OF POOR QUALITY

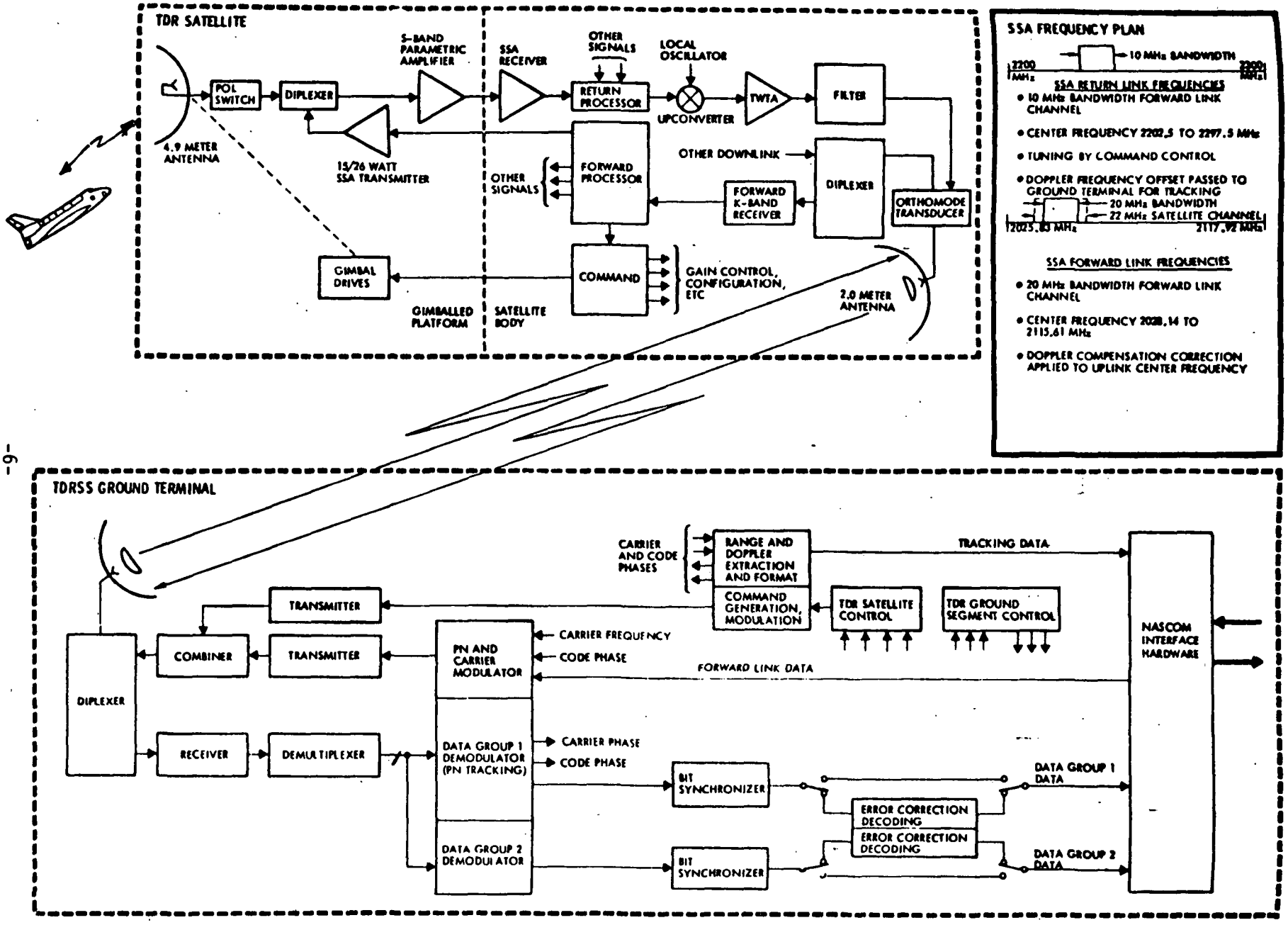

Figure 2-2. SSA Link Processing Simplified Block Diagram

ORIGINAL PAGE IS OF POOR QUALITY

2.1.1 SSA Return Service[5]

Space Shuttle signals received by the S-band feed on the SA antenna are routed by coaxial cable to the S-band diplexer in the equipment compartment on the back of the antenna. From the diplexer receive-output port, the signals are connected to one of the redundant SSA uncooled parametric amplifiers by a coaxial redundancy selection switch.

Parametric amplifiers with sufficient gain to set the receive noise temperature are used for low noise amplification to meet receiver G/T requirements. The signal is routed to the SSA receiver on the TDRS body by the coaxial cable. There it is further amplified, filtered, and input to the return processor.

The return processor uses a synthesizer-generated local oscillator to translate the return signal from any SSA channel to a common intermediate frequency. The synthesizer frequency is set by command and provides across-the-band coverage between 2200 to 2300 MHz in 0.5 MHz steps. Additional tuning in the Ground Segment provides continuous tuning across the SSA band. The signal is bandpass filtered to 10 MHz and frequency division multiplexed (FDM) with the other downlink services. Two independent FDM downlink SSA channels are provided, one for each of the two SSA receivers.

The downlink signal is a composite of return link signals and TDRSS telemetry. This composite is upconverted and amplified in a quasilinear TWTA. It is filtered, combined with wideband KSA downlink and uplink channels in diplexer and orthomode transducer, and transmitted via the 2.0 meter antenna to the ground terminal. Here it is received by a 60 foot cassegrain antenna, amplified by a low-noise uncooled parametric amplifier, downconverted to a convenient intermediate frequency, and routed to appropriate processing equipment. The SSA channels are separated by the downlink FDM demultiplexer, and the signals are routed to data group 2 (DG2) demodulators.

After demodulation, the signal which is biphase-L modulated by rate 1/3 convolutionally encoded data at either 96 or 192 kbps data rate are timed and level quantized by the soft-decision bit synchronizers. The signal errors are corrected by rate 1/3 Viterbi-algorithm decoders. The data are then routed to the TDRSS/NASCOM interface.

Both SSA antennas can point at a single user satellite to increase the effective TDRS antenna gain to system noise temperature ratio (G/T) by postdetection combining. This allows the TDRS to receive signals from a degraded Shuttle not otherwise able to communicate. The two SSA return link signals are combined and designed to yield 2.5 dB improvement in effective TDRS G/T.

2.1.2 SSA Forward Service[5]

SSA forward link data are input to the TDRSS through the NASCOM interface at rates of 72 or 32 kbps.

The forward link data are first rate 1/3 convolutionally encoded and added modulo-2 to the 11.232 M chip/sec, 1023 chip length PN code. This composite is then biphase modulated onto the command channel IF carrier.

The forward link IF output of the biphase modulator is combined into the TDRSS uplink signal by the ground terminal FDM multiplexer, and the composite is transmitted to the satellite. The signal is received by the TDRS 2.0 meter antenna and translated to a convenient IF frequency by the K-band uplink receiver.

This IF signal is input to the forward processor. The SSA forward link signal is demultiplexed from the composite and translated to the desired S-band frequency by a synthesizer generated local oscillator. This synthesizer is tunable in 0.5 MHz steps. The ground terminal applies tuning to the uplink carrier frequency to obtain the required forward link frequency. The forward link signal frequency in the uplink composite signal is also varied slightly to provide doppler compensation for the predicted combined uplink and forward link doppler effects.

The forward link signal crosses the SA antenna deployment hinge and gimbal axes in a coaxial cable. In the antenna module it is amplified by a traveling wavetube amplifier transmitter to either 26 or 15 watts, and routed to the 4.9 meter antenna S-band focal point feed. The power level is selected in accordance with the support schedule. Output power is set by a command controlled attenuator in the TWTA RF drive chain. Antenna

gimbal angles are set by command to point the S-band for forward link beam at the desired Shuttle. Pointing angles are derived in the ground terminal. The signal parameters are summarized on Table 2-1[6] and the preliminary return link power budget on Table 2-2.[7]

Table 2-1. SSA Signal Parameters*

	FORWARD LINK	RETURN LINK
DATA FORMAT	NRZ-L	NRZ-L
DATA RATE		
MODE 1	32 KBPS	96 KBPS
MODE 2	72 KBPS	192 KBPS
CONVOLUTIONAL CODE		
RATE	1/3	1/3
CONSTRAINT LENGTH	7	7
CONVERSION TO BI-PHASE-L	CONVOLUTIONALLY ENCODED NRZ-L DATA SHALL BE CONVERTED TO BI-PHASE-L	CONVOLUTIONALLY ENCODED NRZ-L DATA SHALL BE CONVERTED TO BI-PHASE-L
PN SEQUENCE		
RATE	11.232 M CHIPS/SEC +0.1	NONE
LENGTH	1023	–
CARRIER MODULATION	PSK + $\pi/2$ RAD	PSK + $\pi/2$ RAD
EIRP (MIN)		
MODE 1	–	13 DBW
MODE 2	–	16 DBW
MODE 3 (TRACKING ONLY)	–	-6 DBW
CARRIER FREQUENCIES		
GROUND TO/FROM TDRSS	14,679.50 AND 14,719.50 MHZ	13,677.50 AND 13,697.50 MHZ
SHUTTLE TO/FROM TDRSS	2025.83-2117.92 MHZ	2217.5-2287.5 MHZ

*Forward link power budget is not yet available.

Table 2-2. Preliminary Return Link Power Budget[7]

	SSA		KSA			
	MODE 1	MODE 2	MODE 1			MODE 2
EIRP, DBW	13	16		48.3		46.5
C/N_O AT GROUND,DB HZ	58.3	61.3		92.0		90.3
			CHANNEL 1	CHANNEL 2	CHANNEL 3	
POWER SPLIT			-14.0	-8.0	-1.0	–
INFORMATION BIT RATE,DB	49.8 (96 KBPS)	52.8 (192 KBPS)	52.8 (192 KBPS)	63.0 (2 MBPS)	77 (50 MBPS)	–
E_B/N_O INTO DEMOD,DB	8.5	8.4	25.2	21.0	14.0	–
IMPLEMENTATION DEGRADATION LOSS,DB	3.6	3.6	3.8	3.8	3.6	–
NET E_B/N_O,DB	4.9	4.8	21.4	17.2	10.4	–
THEORETICAL REQUIRED,DB	3.4	3.4	9.6	9.6	4.6	89.0
MARGIN,DB	1.5	1.4	11.8	7.6	5.8	1.3

2.2 KSA SERVICE[5]

Figure 2-3 shows the KSA service processing chain between the Shuttle and the ground terminal interface with NASA.

2.2.1 KSA Return Service

The KSA return signal from the user is received by the K-band cassegrain feed of the 4.9 meter antenna. The cassegrain feed is a five-horn monopulse design. Energy collected by four of these horn is compared to form two autotrack error signals, one for each pointing axis. The error signals are modulated by orthogonal reference signals, and both are added to the data channel at a level low enough to preclude data channel performance degradation. Error signal processing is done by a single-channel autotrack front end.

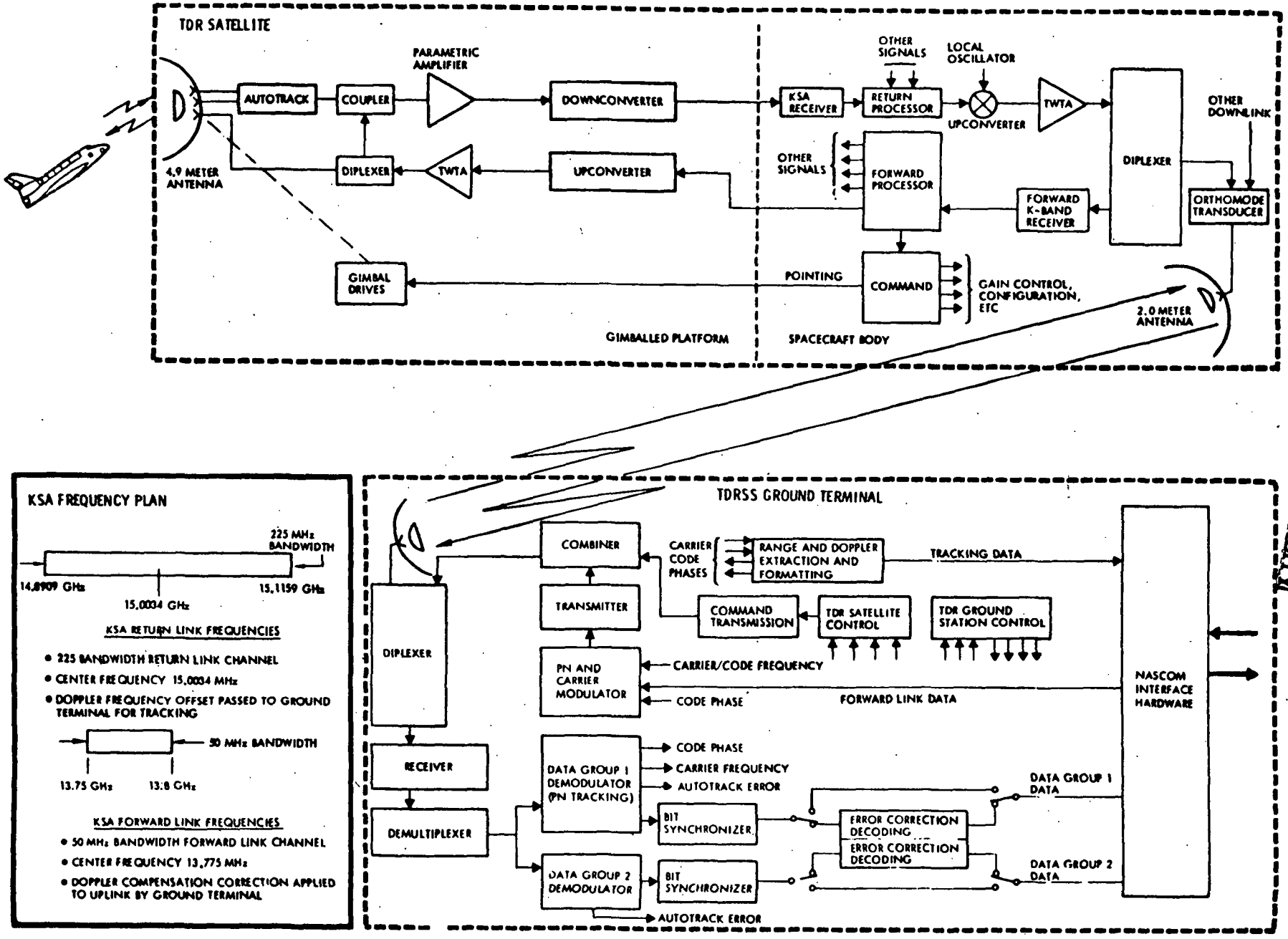

Figure 2-3. KSA Link Processing Simplified Block Diagram

ORIGINAL PAGE IS OF POOR QUALITY

The KSA return link signal is isolated from the forward link signal by a diplexer, and it is amplified by a low noise uncooled parametric amplifier. The signal is downconverted to IF, amplified sufficiently to prevent noise degradation by transmission loss, and routed by coaxial cable across the gimbal axis and deployment hinge to the KSA IF amplifier. Here the KSA return signal is amplified, and its level controlled by command. The signal is input to the return processor where it is combined into the composite downlink or switched to the dedicated KSA channel.

The dedicated KSA downlink channel consists of an upconverter and a TWTA. The converter translates the signal to the KSA return frequency, and a TWTA amplifies it for transmission to the ground.

The composite KSA downlink channel is combined with other return signals and TDRS telemetry to form the TDRS composite downlink signal. The composite downlink signal is upconverted, amplified, and transmitted in the same way as the dedicated channel except that the composite channel TWTA operates in a backed-off quasilinear mode to reduce intermodulation distortion. The composite channel TWTA output is filtered and diplexed with the uplink signal. The two filtered signals are combined in an orthomode transducer and are transmitted to the ground terminal with orthogonal linear polarizations. The dedicated KSA and the TDRS composite downlink signals overlap in frequency. Isolation is provided by the use of polarization separation. Both KSA channels have 225 MHz bandwidth.

Ground terminal KSA processing is identical to the SSA signal processing, except the data rates are higher in the DG2 links. Special high data rate demodulators process 300 Mbps users. Standard KSA demodulators demodulate data up to 100 Mbps uncoded data or up to 50 Mbps coded data. Two 300 Mbps demodulators are provided. All KSA return links are equalized to meet NASA requirements for channel linearity.

KSA antenna pointing error signals are extracted from the KSA return link signal amplitude with the autotrack reference signals. The reference signals are identical to those used in the signal-channel autotrack front end of the TDRS. Reference signals are generated in the ground terminal and are phase synchronized with the TDRS reference using an epoch timing signal from TDRS telemetry. The two KSA tracking and antenna error signals

are filtered, A/D converted, and used to generate pointing commands to close the autotrack pointing loop and keep the TDRS antenna pointed at the user satellite.

K-band Shuttle support is provided using the KSA return link channel and special Shuttle demodulators. Two K-band Shuttle support modes are provided. Mode 1 supports three digital channels with data rates of 2 to 50 Mbps, 16 kbps to 2 Mbps, and 192 kbps. Mode 2 substitutes a 4.2 MHz bandwidth FM channel for the high data rate digital channel.

2.2.2 KSA Forward Service

The KSA forward data processing and handling are identical to those of the SSA forward data, except a wideband mode permits transmission up to 25 Mbps forward link data without PN coding. The minimum KSA forward link data rate is 1000 bps. Since only one KSA forward link frequency is used, there is no variation of the uplink signal frequency other than doppler compensation. The TDRS uses a TWTA as the KSA transmitter to meet the combined requirements of efficiency, bandwidth, and high operating frequency. High power (49.0 dBw) and lower power (45.5 dBw) KSA forward link EIRPs are obtained by controlling the TWTA drive level. The KSA signal parameters are summarized in Table 2-3 and the preliminary return link power budget in Table 2-2.

Table 2-3. KSA Signal Characteristics[6]

PARAMETERS	FORWARD LINK	RETURN LINK					
		MODE 1			MODE 2		
		CHANNEL 1	CHANNEL 2	CHANNEL 3	VIDEO	SUBCARRIER I	SUBCARRIER Q
DATA RATE (KBPS)	1 TO 216	192	16 TO 2000	2000 TO 50,000	ANALOG 3 DB BW = 4.2 MHZ	16 TO 2000	192
DATA FORMAT	NRZ-L	NRZ-L, M, S	NRZ-L, M, S	NRZ-L, M, S	NA	NRZ-L, M, S BI-PHASE L, M, S	NRZ-L, M, S BI-PHASE L, M, S
CONVOLUTIONAL CODING	NONE	NONE	NONE	YES	NA		
RATE				1/2			
CONSTRAINT LENGTH				7			
CONVERSION TO BI-PHASE-L	YES	NA			NA		
PN SEQUENCE	GOLD CODE	NONE			NONE		
RATE	31/1469 X 96 OF CARRIER FREQUENCY						
LENGTH	$2^{10} - 1$						
DATA MODULATION	MODULE-2 ADDED ASYNCHRONOUSLY TO PN CODE						
MODULATION	PSK, $\pm \pi/2$ RADS	QDSB/PSK*	QDSB/PSK	PSK	FM	QPSK	QPSK
EIRP MIN (BER = 10^{-5})	–	48.3 DBW			46.5 DBW		
CARRIER FREQUENCY GROUND TO/FROM TDRS							
KSA-1 KSA-2	14,625.00 AND 15,200.00 MHZ	13,528.40 AND 13,928.40 MHZ					
SHUTTLE TO/FROM TDRS	13,775	15,003.4 MHZ					

*QDSB: QUADRATURE DOUBLE SIDEBAND MODULATION

3. ESTL TDRSS SYSTEM CONFIGURATION AND REQUIREMENTS

To ensure that operation of the Shuttle Orbiter Communications systems meets the program requirements when subjected to electrical conditions similar to those which will be encountered during operational mission, NASA has set up a TASK 501 Test Program to conduct end-to-end RF system test in a laboratory environment.[2,3,4] The test program is divided into two phases: system development testing, and system verification testing. Both tests will be based on the same technical requirement except that system development testing will be conducted with less formal rigor and in greater depth than verification testing. These testings require an integrated test bed consisting of applicable Orbiter, extra vehicular activity (EVA), payload simulator, STDN, and AF/SCF, as well as the TDRSS equipment. Figure 3-1 presents a functional diagram of the hardware test configuration that will be utilized.

Under NASA TASK 501, the communication and tracking system will be configured with prototye hardware for system development test and production hardware for system verification except where such hardware is not readily available (TDRSS and Payload for example). In these cases, simulators whose functional performance is certified to meet appropriate end item specification will be used. Tests will be accomplished one link at a time with other links activated as required for interference evaluation. These system level tests will be accomplished through application of controlled signals, representative of operational signals, into the transmit end of each link and evaluation of these signals as outputed from the receive end of the link. This evaluation is done for different RF link conditions, data rates and modulation indices as appropriate; includes contingency modes and performance curves with similar data plots based on mission predictions of RF strength, doppler, etc., for each channel; and determines the adequacy of the system to support program and mission requirements.

For the purpose of this study, the link under consideration is that of the Shuttle orbiter communication via TDRSS. The remainder of the report will be limited to the discussion of these links. Specifically, it will deal with those TDRSS capabilities in both the satellite and ground segment as related to Shuttle communication links. Functionally, this link is depicted in Figure 3-2. Shuttle Orbiter communication can be routed through

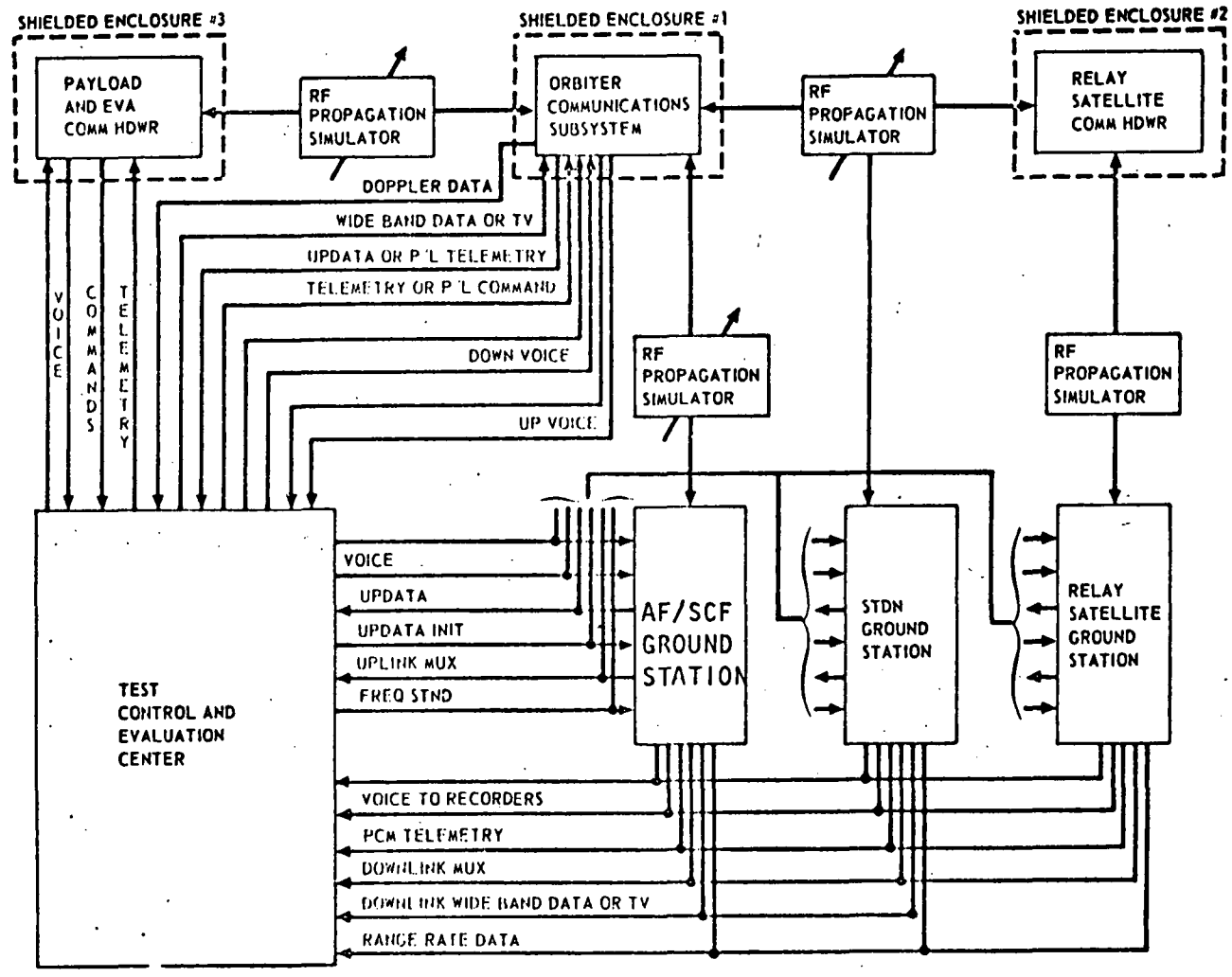

Figure 3-1. ESTL Functional Block Diagram

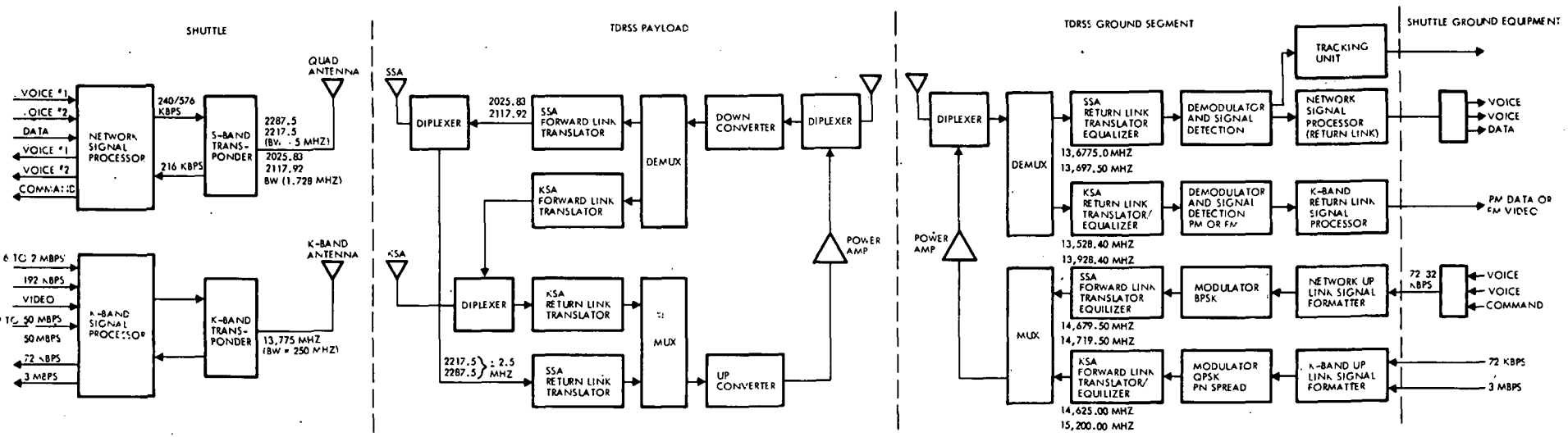

Figure 3-2. Shuttle — TDRSS Link Functional Block Diagram

ORIGINAL PAGE IS OF POOR QUALITY

the TDRSS through either S-band or K-band RF links via the TDRSS satellite to TDRSS ground station and then forward to NASA at NASCOM interface. To fulfill TASK 501 requirements, the TDRSS hardware for the test configuration shall consist of prototype hardware for the development test and production hardware for the system verification system test. However, at this stage of development, the TDRSS program which has not yet held their Critical Design Review and such hardware will not be available. NASA is currently considering using an existing TDRSS Simulator which was built by Motorola prior to the award of the actual TDRSS Program. The block diagrams of this space segment simulator and ground segment simulator are shown in Figures 3-3 and 3-4, respectively.[8,9] As a comparison the block diagram of the actual TDRSS Space segment and ground segment are also shown in Figures 3-5 and 3-6, respectively. As shown in block diagrams, the space segment of the ESTL TDRSS simulator is very much like the actual TDRSS space segment in that both are bent pipe linear transponders with AGC to control the downlink output and operate with same modulation formats. However, the ESTL simulator specification does not match those of the actual TDRSS space segment transponder and is significantly worse than the current predicted performance. Some performance parameters of the simulator and of the actual transponder are summarized in Table 3-1.[8,9,10]

Design of the TDRSS transponder processor is still undergoing improvement as well as change to accommodate adverse RF interference; no result is available yet. However, in normal operating conditions, the TDRSS transponder is expected to operate as a linear channel as specified.

The design of the ground portion of the TDRSS design is not yet complete. Available information indicated that ESTL simulator with proposed modification will substantially meet the functional requirements for the TDRSS ground segment. Since ESTL will procure these additional equipment from the same manufacturer and per same specification as those for the actual TDRSS Program, the ground station simulator should perform in the same manner as the actual ground segment. However, the design of the ground station is not yet completed. It is suggested that ESTL continue to monitor its development and update the simulator as necessary. As a reference a list of Shuttle applicable TDRSS hardware is summarized in Table 3-2 and their specifications if available are also included.

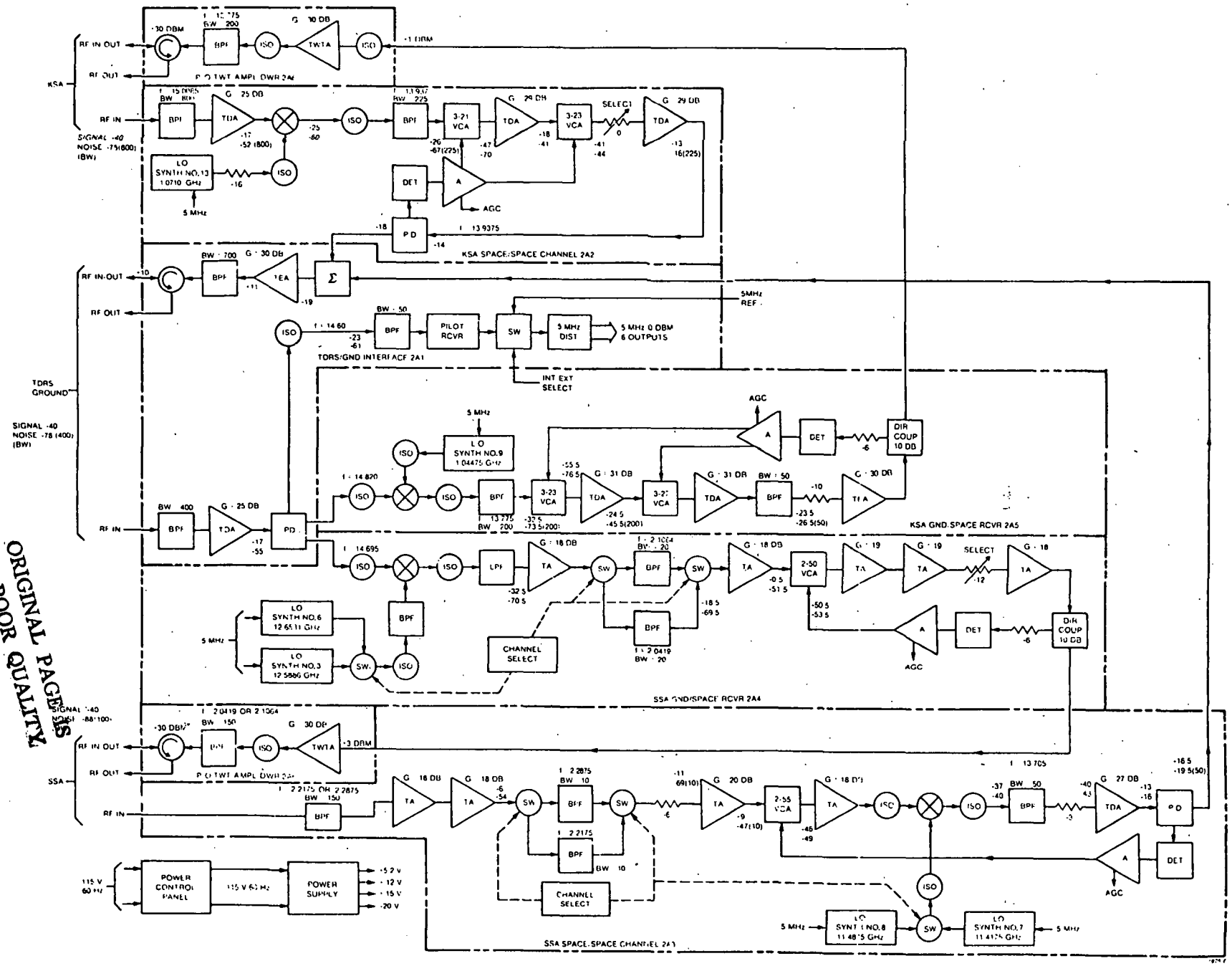

Figure 3-3. TASK 501 Space Segment Simulator Functional Block Diagram

ORIGINAL PAGE IS OF POOR QUALITY

ORIGINAL PAGE IS
OF POOR QUALITY

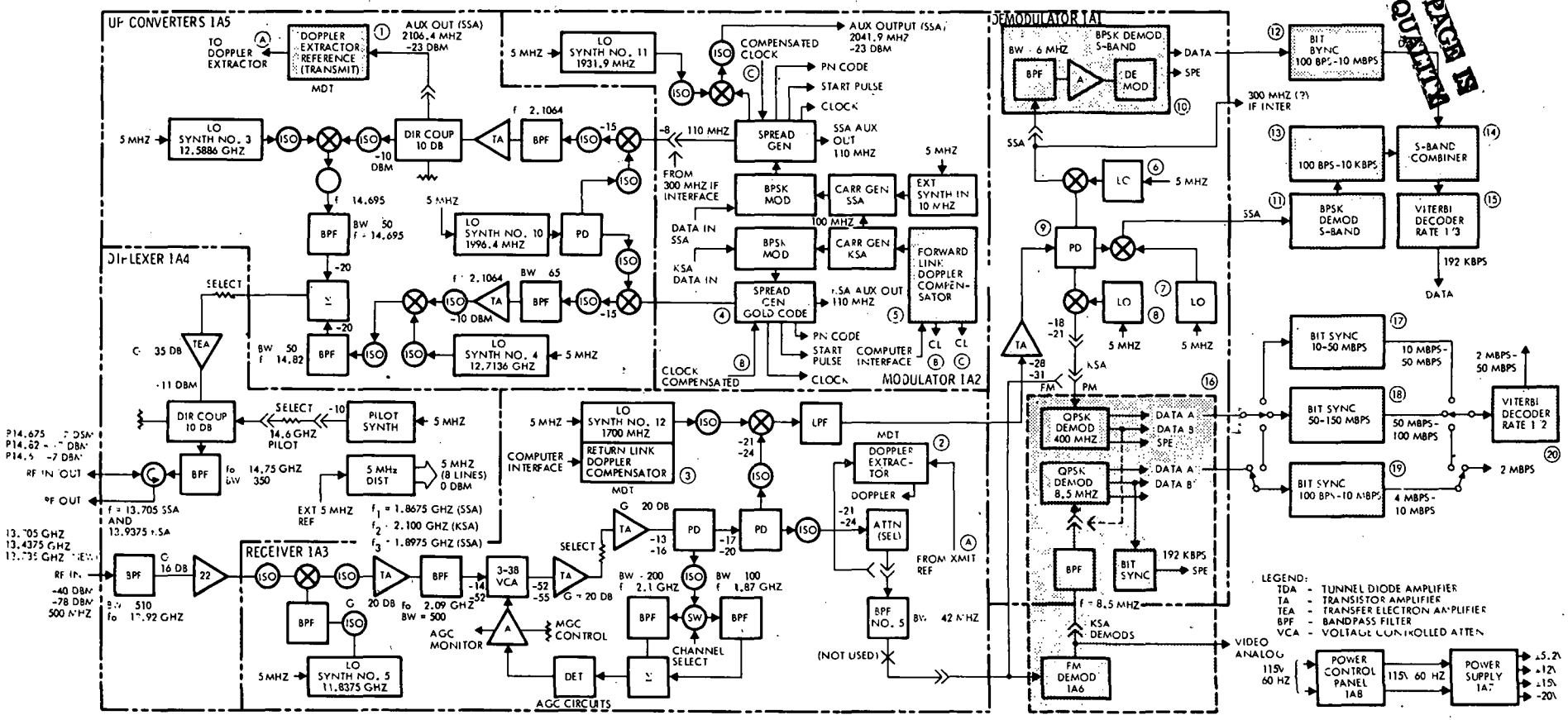

Figure 3-4. TASK 501 Ground Segment Simulator Functional Diagram

PRECEDING PAGE BLANK NOT FILMED

ORIGINAL PAGE IS OF POOR QUALITY

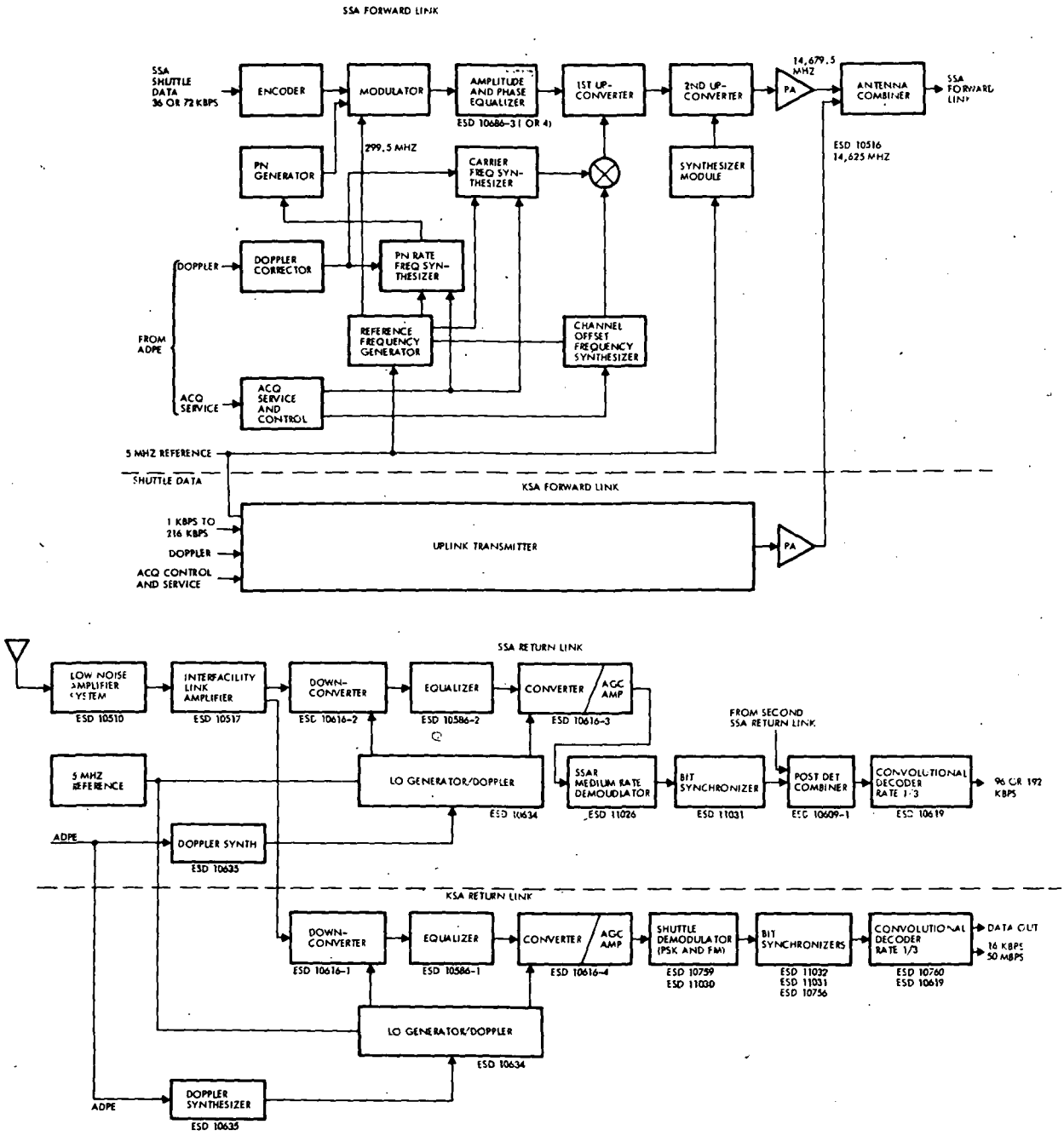

Figure 3-6. TDRSS Ground Segment Shuttle Links

Table 3-1. TDRSS Channel Response Characteristics Summary — Actual TDRSS Channel Versus TASK 501 Simulator

PARAMETERS	SSA				KSA				TASK 501 SIMULATOR
	FORWARD LINK		RETURN LINK		FORWARD LINK		RETURN LINK		
	SPECIFICATION	ESTIMATED PERFOR-MANCE	SPECIFICATION	ESTIMATED PERFOR-MANCE	SPECIFICATION	ESTIMATED PERFOR-MANCE	SPECIFICATION	ESTIMATED PERFOR-MANCE	
GAIN FLATNESS (DB P-TO-P)									
WIDEBAND	2.5	1.4	2.5	1.3	2.5	1.3	2.5	1.6	2
NARROWBAND	1.0	1.1	1.2	1.0	1.0	1.0	1.2	1.4	
PHASE LINEARITY (DEG P-TO-P)									
NARROWBAND	11.20	8.64	12.0	8.1	11.2	7.7	12.0	11.0	22
PROPAGATION TIME VARIATION (NSEC P-TO-P)	30	15	30	28	30	18	30	10	NOT SPECIFIED

WIDEBAND: ±10 MHZ FOR SSA FORWARD LINK ±5 MHZ FOR SSA RETURN LINK
±25 MHZ FOR KSA FORWARD LINK ±11.25 MHZ FOR KSA RETURN LINK

NARROWBAND: ±7 MHZ FOR SSA FORWARD LINK ±80 MHZ FOR KSA RETURN LINK
±17.5 MHZ FOR KSA FORWARD LINK ±3.5 MHZ FOR SSA RETURN LINK

Table 3-2. TDRSS Hardware for TASK 501

SEGMENT	SPECIFICATION NO. (TRW SPECIFICATION)
SATELLITE	
K-BAND FILTER	
K-BAND 30 WATT TWT	EQ4-1740
K-BAND UPCONVERTER	EQ4-1800
RETURN PROCESSOR 1/2 FLIGHT UNIT	EQ4-2031
RETURN FREQUENCY SYNTHESIZER (2)	EQ4-2035
FORWARD PROCESSOR 1/2 FLIGHT UNIT	EQ4-2032
SSA 26 WATTS TWTA	EQ4-1739
FORWARD FREQUENCY SYNTHESIZER (2)	EQ4-2035
MASTER SDU	EQ4-2034
MASTER FREQUENCY GENERATOR	EQ4-2015
KSA UPCONVERTER	EQ4-1800
KSA 1.5 WATT TWTA	EQ4-1741
KSA PREAMPLIFIER/DOWNCONVERTER	EQ4-1802
KSA PARAMP	EQ4-1742
KSA DIPLEXER	EQ4-1750
SSA PARAMP	EQ4-1743
SSA DIPLEXER	EQ4-1752
GROUND	
FORWARD LINK	
ENCODER	
MODULATOR	ESD 10584
AMPLITUDE AND PHASE EQUALIZER	
FIRST UPCONVERTER	ESD 10574
SECOND UPCONVERTER	
POWER AMPLIFIER	ESD 10576
ANTENNA COMBINER	

Table 3-2. TDRSS Hardware for TASK 501 (Continued)

SEGMENT	SPECIFICATION NO. (TRW SPECIFICATION)
GROUND (Continued)	
SYNTHESIZER MODULE	
CARRIER FREQUENCY SYNTHESIZER	
REFERENCE FREQUENCY GENERATOR	
PN RATE FREQUENCY SYNTHESIZER	
ACQUISITION SERVICE AND CONTROL	
DOPPLER CORRECTOR	
PN GENERATOR	
EQUALIZER	ESD-10586-3&4
RETURN LINK	
LOW NOISE AMPLIFIER SYSTEM	ESD 10517
INTERFACILITY LINK AMPLIFIER	ESD 10510
DOWNCONVERTER	ESD 10616-1, 2, 3, AND 4
EQUALIZER	ESD 10586-1 AND 2
DOPPLER SYNTHESIZER	ESD 10635
5 MHZ REFERENCE	
LO GENERATOR/DOPPLER	ESD 10634
SSAR MEDIUM RATE DEMODULATOR	ESD 11026
LMR BIT SYNCHRONIZER	ESD 11031
CONVOLUTIONAL DECODER RATE 1/3	ESD 10619
SHUTTLE DEMODULATOR (PSK AND FM)	ESD 10759
HIGH RATE BIT SYNCHRONIZER	ESD 10759
ULTRA HIGH RATE BIT SYNCHRONIZER	ESD 10756
CONVOLUTIONAL DECODER RATE 1/3	ESD 11032
RATE 1/2 150 MBPS DECODER	ESD 10760
POST DETECTION COMBINER	ESD 10609-1

NOTE: EQ4-XXXX SPECIFICATIONS ARE GENERATED BY TRW SYSTEMS AND ESD XXXX ARE GENERATED BY HARRIS ESD.

The proposed ESTL TDRSS Simulator will have performed all the essential functions of the TDRSS. However, the actual hardware is substantially different than the prototype and production equipment. The test results will functionally represent the Shuttle communication link through the TDRSS. However, it will not verify the actual quantitative performance of the actual TDRSS system.

REFERENCE

1. Proposal for "TDRS System Configuration Study," Volume I, Technical Proposal in Response to NASA JFC, RFP No. 9-BC 73-40-7-79P, TRW 32142. 4 May 1977.

2. Space Shuttle Program NASA TASK 501, "Communications and Tracking Systems Ground Testing — System Development Plan," NASA Lyndon B. Johnson Space Center, Houston, Texas, Report No. JSC 09687. December 1975.

3. Space Shuttle Program NASA TASK 501, "Communication and Tracking Systems Ground Testing — Verification Plan," NASA Lyndon B. Johnson Space Center Houston, Texas, Report No. JSC 09685. December 1975.

4. Space Shuttle Program NASA TASK 501, System Development Test Requirements and Status Report for TDRS S-band Relay Link. First issue: "Requirements." NASA Lyndon B. Johnson Space Center, Houston, Texas, Report No. JSC 11757. February 1977.

5. "Telecommunication Services Via a Tracking and Data Relay Satellite System, System Design Report," Volume I, System Design, TRW Report 29000-20-003. 17 March 1977.

6. "Satellite Systems — SS TDRSS Program Performance Specification for Telecommunications Services (NASA S-805-1 MOD)" Western Union Document INU-00-01 Revision A. 13 December 1976.

7. "TDRSS Monthly Progress Report MA-09," TRW Defense and Space Systems TDRSS Report 29000-600-002-014. April 1978.

8. TDRSS Operation and Maintenance Instruction — Ground Station Simulator, Volume I NASA Support Manual Tracking Data Relay Satellite System, Contract No. NAS9-14945; Motorola Report 68-P01184L. 30 November 1976.

9. Ibid, Volume 2, Satellite Simulator.

10. H.B. Poza, "TPM (Technical Parameter Monitor) Issue No. 8," TRW IOC TDRSS-78-310-061. 24 March 1978.

11. Western Union Space Comm. TDRSS Program, "TDRSS Ground Segment Specification," Western Union Document WU-02-02, Rev. B. 11 May 1977.

SYM	LTR	REVISIONS DESCRIPTION	DATE	APPROVED
	A	SEE E.O.	10/1/67	A.C.
	B	SEE E.O.	10/27/67	A.C.
	C	SEE E.O.	11/1/67	A.C.
	D	SEE E.O.	1/4/78	A.C.
	E	SEE E.O.	1/24/78	A.C.
	F	SEE E.O.	2/16/78	A.C.
	G	SEE E.O.	6/3	W.W.J.F.

UNIT	BLOCK DIAGRAM NO.
FWD. PROG.	A-292603
AFT. PROG.	A-292604
S/W PROG.	A-292605
NAV. SWITCH	A-292610
TRANSMITTER	A-292611
L.O. GEN. RCVR.	A-292612
TORSION CPR.	A-292613
S.W. PROG. CPR.	A-292614
A.FWD. PROG. CPR.	A-292615
NAV. SWITCH CPR.	A-292616
F.WD.&TRN. SYN.	A-292617

TRANSMITTER RECEIVE ELEMENTS TO NAV. RECEIVER				
ELEMENT	DEPLETION	NAV. WATTS	DISPLACEMENT	NAV. RECEIVER
1-C1A	1-C1A-1	1000 MILLIWATTS	1-C1A	1-C1A-1
1-C1B	1-C1B-1	1000 MILLIWATTS	1-C1B	1-C1B-1
1-C1C	1-C1C-1	1000 MILLIWATTS	1-C1C	1-C1C-1
1-C1D	1-C1D-1	1000 MILLIWATTS	1-C1D	1-C1D-1
1-C1E	1-C1E-1	1000 MILLIWATTS	1-C1E	1-C1E-1
1-C1F	1-C1F-1	1000 MILLIWATTS	1-C1F	1-C1F-1
1-C1G	1-C1G-1	1000 MILLIWATTS	1-C1G	1-C1G-1
1-C1H	1-C1H-1	1000 MILLIWATTS	1-C1H	1-C1H-1
1-C1I	1-C1I-1	1000 MILLIWATTS	1-C1I	1-C1I-1
1-C1J	1-C1J-1	1000 MILLIWATTS	1-C1J	1-C1J-1

RECEIVE ELEMENTS TO NAV. RECEIVER				
ELEMENT	DEPLETION	NAV. WATTS	DISPLACEMENT	NAV. RECEIVER
1-C1K	1-C1K-1	1000 MILLIWATTS	1-C1K	1-C1K-1
1-C1L	1-C1L-1	1000 MILLIWATTS	1-C1L	1-C1L-1
1-C1M	1-C1M-1	1000 MILLIWATTS	1-C1M	1-C1M-1
1-C1N	1-C1N-1	1000 MILLIWATTS	1-C1N	1-C1N-1
1-C1O	1-C1O-1	1000 MILLIWATTS	1-C1O	1-C1O-1
1-C1P	1-C1P-1	1000 MILLIWATTS	1-C1P	1-C1P-1
1-C1Q	1-C1Q-1	1000 MILLIWATTS	1-C1Q	1-C1Q-1
1-C1R	1-C1R-1	1000 MILLIWATTS	1-C1R	1-C1R-1
1-C1S	1-C1S-1	1000 MILLIWATTS	1-C1S	1-C1S-1
1-C1T	1-C1T-1	1000 MILLIWATTS	1-C1T	1-C1T-1
1-C1U	1-C1U-1	1000 MILLIWATTS	1-C1U	1-C1U-1
1-C1V	1-C1V-1	1000 MILLIWATTS	1-C1V	1-C1V-1
1-C1W	1-C1W-1	1000 MILLIWATTS	1-C1W	1-C1W-1
1-C1X	1-C1X-1	1000 MILLIWATTS	1-C1X	1-C1X-1
1-C1Y	1-C1Y-1	1000 MILLIWATTS	1-C1Y	1-C1Y-1
1-C1Z	1-C1Z-1	1000 MILLIWATTS	1-C1Z	1-C1Z-1

NOTES:
1. FOR CURRENT UNIT BLOCK DIAGRAM SEE LATEST REVISION OF DRAWING LISTED IN DRAWING BLOCK.

CONTRACT NO.	DATE	THE BOEING COMPANY SEATTLE, WASHINGTON	
DRAWN		TRW	
CHECKED		BLOCK DIAGRAM, COMBINED TACAN	
ENGINEER		TELECOMMUNICATIONS SUBSYSTEM	
APPROVED		11982	292601
DATE			

FRAME 292601 G

292601 G SHEET 2