(NASA-CR-161173) SATELLITE POWER SYSTEM (SPS) CONCEPT DEFINITION STUDY (EXHIBIT C) Final Review (Rockwell International Corp., Downey, Calif.) 477 p HC A21/MF A01 CSCL 22B G3/15
N79-19071
Unclas
16439

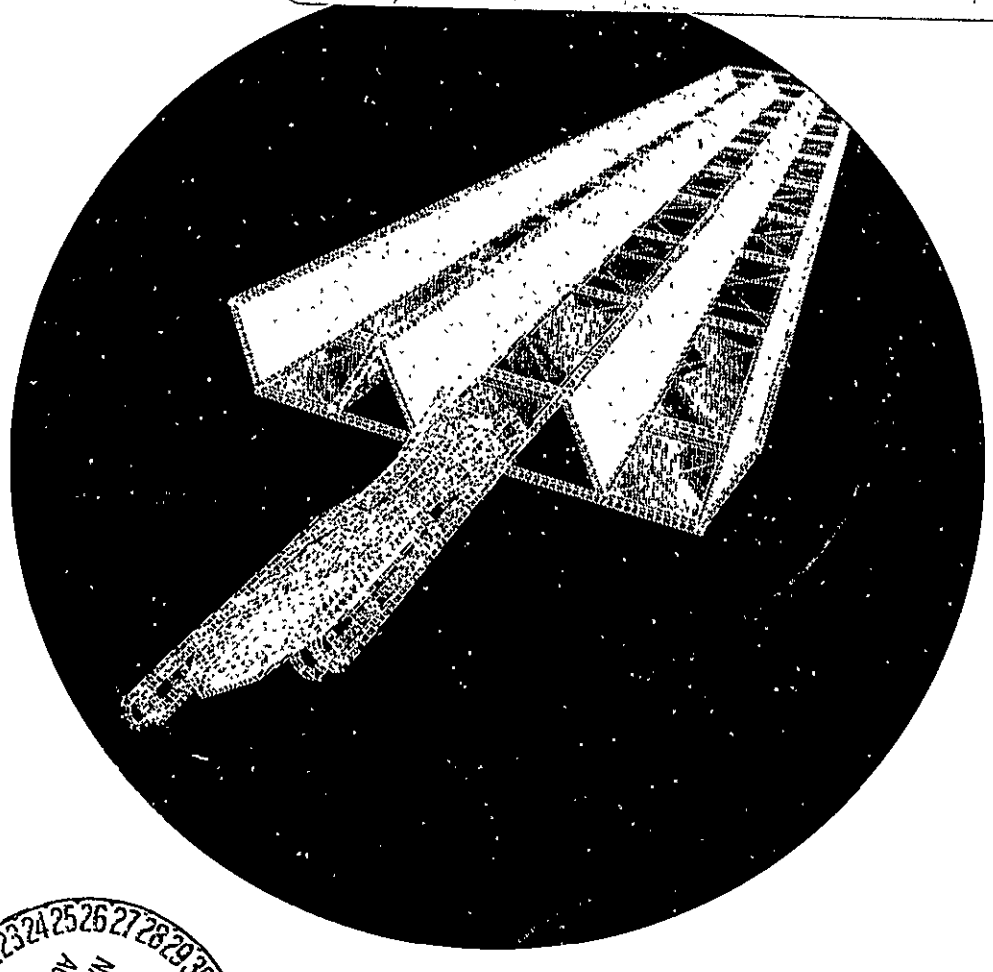

SSD 79-0076

SATELLITE POWER SYSTEM (SPS) CONCEPT DEFINITION STUDY (EXHIBIT C) FINAL PERFORMANCE REVIEW

MARSHALL SPACE FLIGHT CENTER

MARCH 21, 1979

Satellite Systems Division
Space Systems Group
Rockwell International

APR 1979
RECEIVED
NASA STI FACILITY
ACCESS DEPT.

NAS8-32475
DPD 558
DR MA-03

SSD 79-0076

Final Review

SATELLITE POWER SYSTEMS (SPS) CONCEPT DEFINITION STUDY (EXHIBIT C)

March 21, 1979

NATIONAL AERONAUTICS AND SPACE ADMINISTRATION
GEORGE C. MARSHALL SPACE FLIGHT CENTER

MARSHALL SPACE FLIGHT CENTER
ALABAMA 35812

G.M. Hanley
SPS Program Manager

Satellite Systems Division
Space Systems Group

Rockwell International

EXECUTIVE SUMMARY

G. M. HANLEY

DESIGN DEFINITION

- REFERENCE CONCEPT - A. A. NUSSBERGER
- SOLID-STATE CONCEPTS - W. V. McRAE
- MICROWAVE TRANSMISSION SYSTEM - C. Y. TOMITA
- LASER ENVIRONMENTAL STUDY - G. M. HANLEY

CONSTRUCTION & OPERATIONS

- R. F. WADSWORTH

TRANSPORTATION SYSTEM DEFIN.

- R. P. BERGERON

PROGRAM AND COST DATA

- F. W. VON FLUE

STUDY FLOW

A time-related study flow diagram that summarizes the study approach is shown in this figure. The major data base was documentation from the previous Rockwell SPS Concept Definition Study (Exhibits A and B). Additional data included documentation of the Boeing Company SPS Concept Definition Study and results of NASA (MSFC and JSC) in-house SPS studies.

During the first 3 months of the study, major emphasis was placed on an update of the point design defined in Contract Exhibits A and B. The update resulted from additional trade studies conducted during the first 3 months. The updated point design and similar data from the Boeing Company studies and NASA in-house studies resulted in a preliminary description by NASA and DOE of a reference system. The purpose of the reference system is to provide a specific single data base for the SPS concept evaluation being conducted by DOE. The reference system was then defined and a report was issued by NASA/DOE that describes this system and contains key trade studies leading to definition of this system. This system description formed the basis for a series of studies (construction, transportation, experiment/verification program, and cost) that further defined the concept and program. In addition, a series of trade studies at the total system level and at the subsystem level were conducted to identify modifications to the currently-defined reference system and to define alternative system concepts which have the potential for significant improvements.

The major outputs of the study are shown in this figure. The constructability studies resulted in the definition of the concepts for satellite, rectenna, and satellite construction base construction. Transportation analyses resulted in definition of heavy-lift launch vehicle (HLLV), electric orbit transfer vehicle (EOTV), personnel orbit transfer vehicle (POTV), and intra-orbit transfer vehicle (IOTV) as well as overall operations related to transportation systems. The experiment/verification program definition resulted in the definition of elements for the Ground-Based Experimental Research (GBER) and Key Technology plans. These studies also resulted in conceptual approaches for early space technology verification. The cost analysis defined the overall program and cost data for all program elements and phases.

This data will form the basis for further program definition and is the basis for recommended future effort.

STUDY FLOW

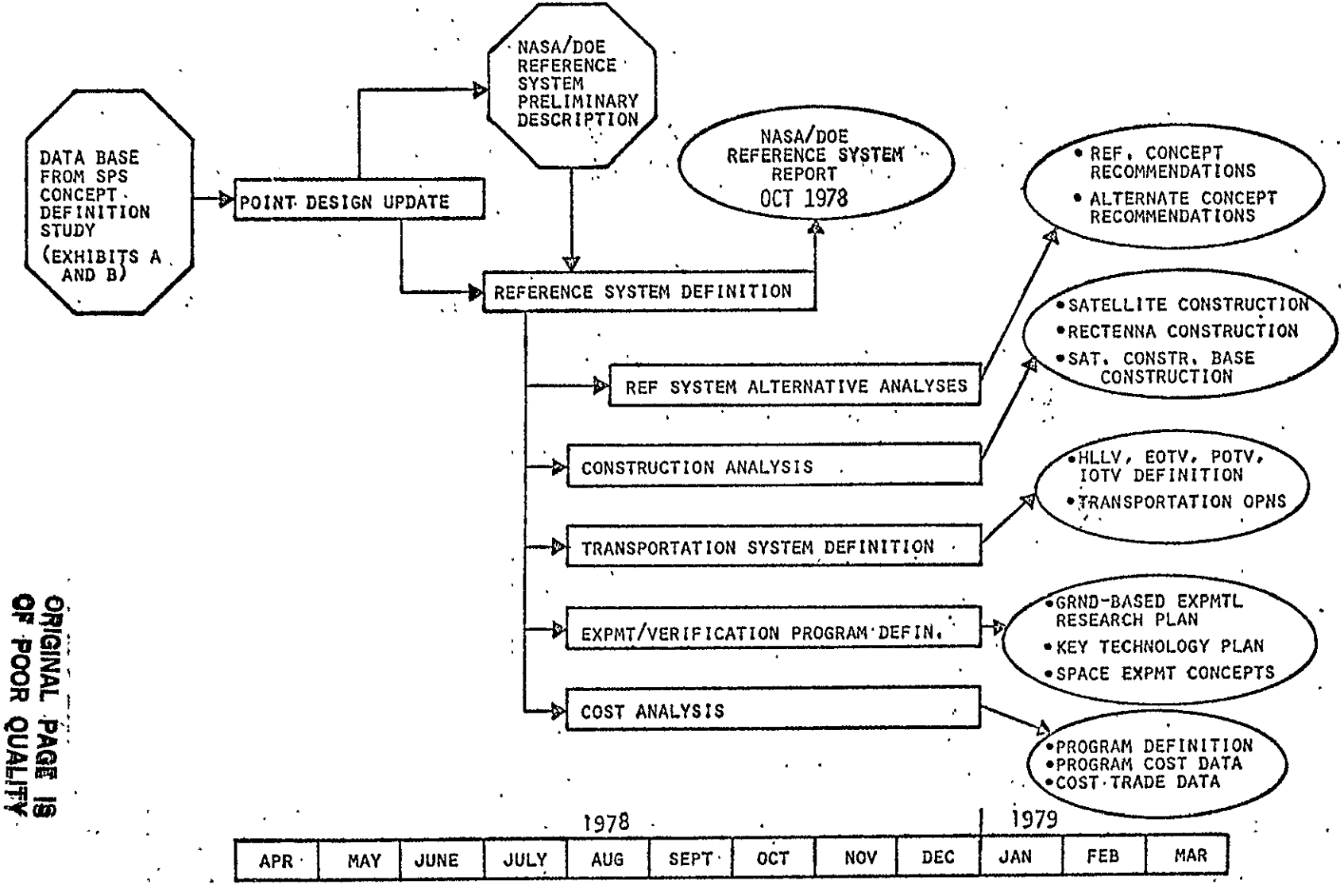

ORIGINAL PAGE IS OF POOR QUALITY

SUMMARY TOPICS

This chart is self-explanatory.

SUMMARY TOPICS

SYSTEM DEFINITION

- REFERENCE CONCEPT
- MAJOR ALTERNATIVE STUDY RESULTS
- SOLID STATE MICROWAVE TRANSMISSION CONCEPTS
- LASER TRANSMISSION ENVIRONMENTAL ANALYSIS

SPECIAL EMPHASIS STUDIES

- SATELLITE CONSTRUCTION
- SATELLITE CONSTRUCTION BASE CONSTRUCTION
- RECTENNA CONSTRUCTION
- SPACE LOGISTICS

TRANSPORTATION SYSTEM STUDIES

- HEAVY LIFT LAUNCH VEHICLE
- ELECTRIC ORBIT TRANSFER VEHICLE
- PERSONNEL ORBIT TRANSFER VEHICLE

PROGRAM DEFINITION

- PROGRAM DESCRIPTION
- PROGRAM COST

ORIGINAL PAGE IS
OF POOR QUALITY

REFERENCE SATELLITE CONCEPTS

The reference system defined by NASA and DOE contains the two satellites shown in this figure. The reference system has the characteristics shown on the next chart. The major difference between the two satellites is the energy conversion approach; one uses silicon solar cells in a planar, non-concentrated array and the other uses GaAs solar cells in a planar array with CR=2. The microwave antenna on both satellites is located at one end of the satellite. Power at the utility interface on the ground is 5 GW. A phased array is used for the rectenna.

The construction location, GEO, is the same as previously described for the Rockwell system. The transportation system is comprised of elements similar to those described for the Rockwell point design.

The purpose of the reference system is to provide DOE with a specific and consistent set of data on the SPS for purposes of evaluation. Following preliminary definition of this concept, trade studies were conducted on this contract to further define the characteristics of the system. These studies were concentrated on the GaAs system concept.

REFERENCE SATELLITE CONCEPTS

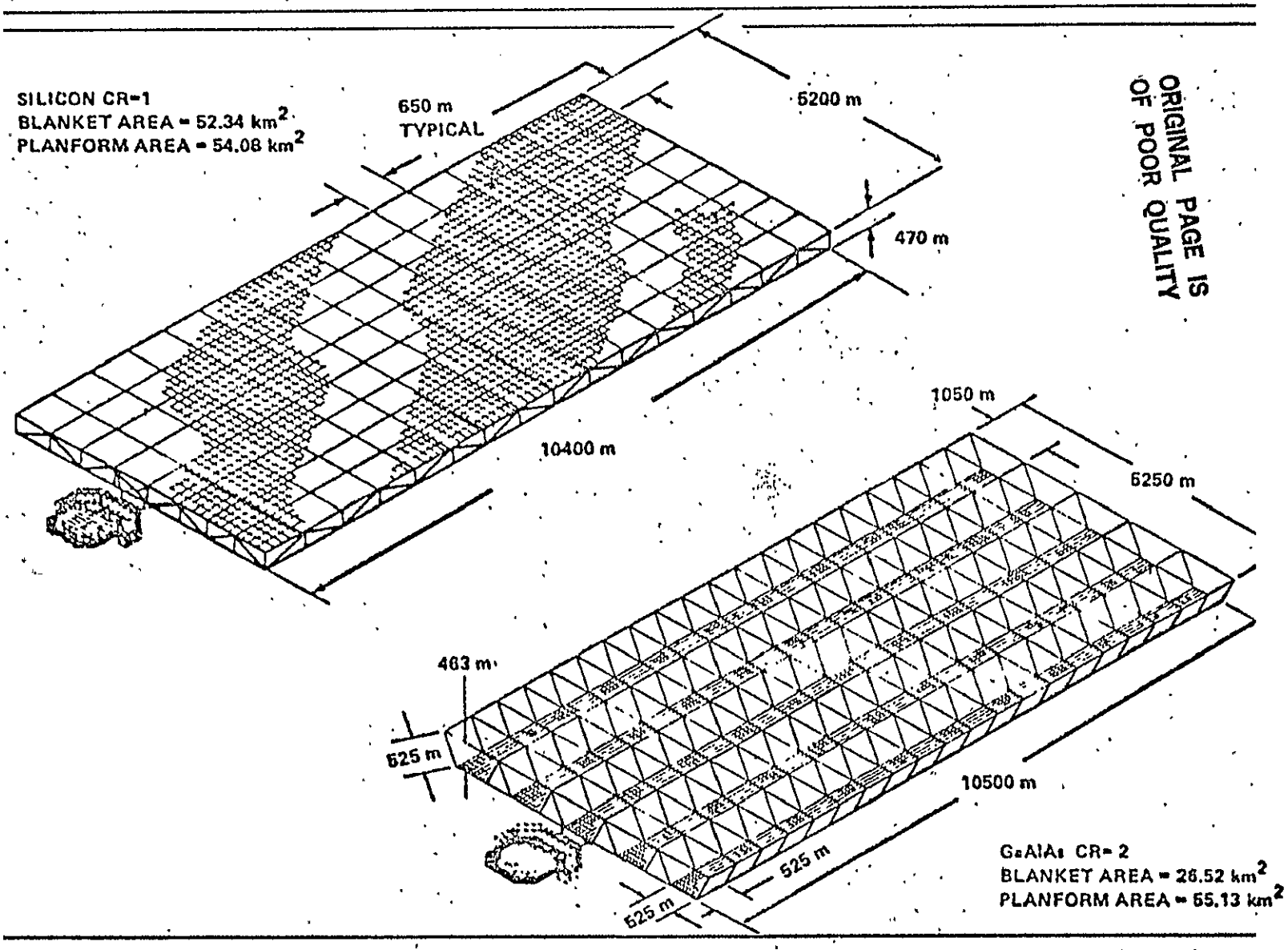

ORIGINAL PAGE IS
OF POOR QUALITY

REFERENCE SYSTEM CHARACTERISTICS

This chart is self-explanatory.

REFERENCE SYSTEM CHARACTERISTICS

SPS GENERATION CAPABILITY (UTILITY INTERFACE)		5 GW
OVERALL DIMENSIONS (KM)		5.3 x 10.4
SATELLITE MASS (KG)		34×10^6 51×10^6
POWER CONVERSION—PHOTOVOLTAIC		GaAlAs (CR=2) SILICON (CR = 1)
STRUCTURE MATERIAL		GRAPHITE COMPOSITE
CONSTRUCTION LOCATION		GEO
TRANSPORTATION		
• EARTH-TO-LEO	CARGO (PAYLOAD)	VERTICAL TAKEOFF, WINGED TWO-STAGE (424,000 KG)
	PERSONNEL (NUMBER)	MODIFIED SHUTTLE (75)
• LEO-TO-GEO	CARGO	DEDICATED ELEC. OTV
	PERSONNEL (NUMBER)	TWO-STAGE LOX/LH_2 (75)
MICROWAVE POWER TRANSMISSION		
• NUMBER OF ANTENNAS		1
• ANTENNA POINTING/CONTROL		CONTROL MOMENT GYROS (CMG's)
• DC-RF CONVERTER		KLYSTRON
• FREQUENCY (GHz)		2.45
• RECTENNA DIMENSIONS (KM)		10 x 13
• RECTENNA POWER DENSITY (MW/CM^2)		
	CENTER	23
	EDGE	1

ORIGINAL PAGE IS OF POOR QUALITY

ALTERNATIVE STUDIES

This chart is self-explanatory

ALTERNATIVE STUDIES

- COPLANAR VERSUS TRIANGULAR SOLAR ARRAY TROUGH ARRANGEMENT
- NUMBER OF SOLAR ARRAY TROUGHS
- CENTRAL VERSUS END-MOUNTED ANTENNA
- ALUMINUM VERSUS COMPOSITE STRUCTURE
- ANTENNA STRUCTURAL CONCEPT
- ALTERNATIVE RECTENNA PHASED ARRAYS
- SOLID-STATE MICROWAVE TRANSMISSION CONCEPTS

ORIGINAL PAGE IS
OF POOR QUALITY

FACTORS INFLUENCING ANTENNA LOCATION

The location of the antenna may have an influence on several system characteristics including (1) satellite mass, (2) attitude control and stationkeeping, (3) microwave transmission, (4) thermal control, and (5) satellite construction.

The impact on mass was already shown on the previous chart. As shown, a three trough end-mounted concept has a mass 2.2×10^6 kg greater than the center-mounted antenna concept. The mass difference is attributable to increased power distribution mass caused by longer distribution distances for the end-mounted antenna concept.

Stationkeeping requirements are virtually identical for end- or center-mounted antenna concepts. The major stationkeeping requirement is due to solar pressure perturbation. Although the solar pressure perturbation is cyclical over a year, the orbital excursions are unacceptable because of the increased amount of geosynchronous space occupied by the satellite without corrections. Because of the assymetry of the end-mounted antenna concept, the attitude control requirements due to solar pressure are large. If these torques were controlled separately from stationkeeping, 4.0% of the spacecraft mass would be required in propellants over 30 years (as compared to a total of 5.6% for all attitude control requirements). By combining the solar pressure and other stationkeeping corrections with attitude control corrections, the center-mounted and end-mounted concepts have virtually the same propellant mass requirements because of the dominance of solar pressure stationkeeping, which is the same for both concepts. Because of the amount of solar pressure stationkeeping correction required, the SPS troughs can be partially pointed toward the sun to reduce losses due to excursions of the sun north and south of the equator without an attitude control propellant penalty.

Microwave transmission interference with the inboard collector array structure also was considered as a potential penalty for the center-mounted antenna concept. However, because of the large antenna aperature, spreading of the beam and side lobe formation is negligible in the neighborhood of the satellite. As long as no structure is located such that a normal from the antenna intersects it, no interference should occur. The center-mounted concept is designed to satisfy this constraint.

Because carry-through and rotary joint structure is located directly behind the microwave antenna where waste heat from the klystrons is being rejected, there is some concern of the thermal impacts. Thermal control can be achieved to an acceptable level for either aluminum or graphite composites by surface coating or surface covering at a negligible weight penalty.

Satellite construction studies indicate some additional construction complexity due to the center located antenna. At this time, the complexity is difficult to trade off against the additional mass required for the end-mounted concept.

As a result of these trade studies, it was concluded that either antenna location results in a feasible concept. The only significant penalty identified was the mass increase for the end-mounted antenna of 2.2×10^6 kg. For this reason, the center-mounted concept is preferred, but either satellite concept is acceptable.

FACTORS INFLUENCING ANTENNA LOCATION

FACTOR	IMPACT
• SATELLITE MASS	• END-MOUNTED 2.2×10^6 kg HEAVIER
• ATTITUDE CONTROL/ STATIONKEEPING	• COMBINING SOLAR PRESSURE STATIONKEEPING WITH ATTITUDE CONTROL RESULTS IN NO DIFFERENCE
• MICROWAVE TRANSMISSION	• CURRENT CENTER-MOUNTED ANTENNA DESIGN DOES NOT RESULT IN MW BEAM INTERFERENCE WITH STRUCTURE
• THERMAL CONTROL	• PROTECTION FROM HEATING OF CENTER STRUCTURE BY KLYSTRONS AVOIDED WITH NEGLIGIBLE WEIGHT IMPACT
• SATELLITE CONSTRUCTION	• CENTER-MOUNTED CONSTRUCTION MORE COMPLEX

CENTER-MOUNTED ANTENNA PREFERRED (LESS MASS), BUT EITHER IS ACCEPTABLE

ORIGINAL PAGE IS OF POOR QUALITY

NASTRANS STRUCTURAL ANALYSIS SUMMARY

The triangular trough arrangement concept (Rockwell point design) was used to conduct a detailed structural analysis using the NASTRAN computer model. It was assumed that construction occurred at a uniform temperature of 0°C, that calculated equilibrium temperatures occurred during normal operation in the sun, and that a minimum temperature of -150°C occurs during an eclipse of the sun by the earth. Results of this analysis showed maximum structural deflections at the solar array tips of 100 m for aluminum structure and 1.1 m for composite structure. Detailed analysis of tribeam loading revealed that local loading for aluminum structure caused by deflections exceeded crippling allowables of the elemental caps for a 10 mil thickness aluminum structure. For some regions, material thicknesses up to 30 mils would be required. If all members were constrained to a 30 mil aluminum material thickness, a structural weight of up to 10×10^6 kg would result for aluminum structure compared to 1.2×10^6 kg for composite structure. This maximum value for aluminum could be reduced by about one-half by selectively using 30 mil structure only in the lateral structure where crippling allowables are exceeded and 10 mil structure in the longitudinal structure.

The major problem with the composite structure is the current lack of knowledge on lifetime in orbit. The 30-year SPS requirement is much more severe than for other spacecraft.

As a result of these trade studies, it was concluded that either aluminum or composite structure can be used for SPS. Because of the lower deflections, induced stresses, and lower weight of composite structure, it is recommended for the satellite structure. Research is required to assure either that current composite structure applicable to SPS will survive the space environment for 30 years or that composite structure materials can be formulated that will survive the space environment for 30 years. Aluminum structure can be carried as a viable alternative.

NASTRANS STRUCTURAL ANALYSIS SUMMARY

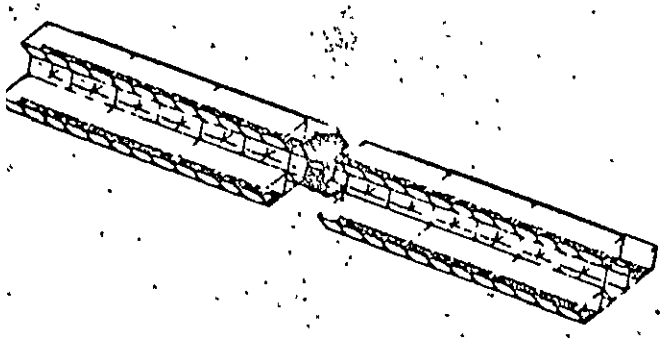

ASSUMPTIONS

- 3-TROUGH CONFIGURATION
- THERMAL CONSTRAINTS
  - EQUILIBRIUM OPERATING TEMPERATURES
  - MINIMUM TEMPERATURE DURING ECLIPSE = -150°C
  - CONSTRUCTION TEMPERATURE = 0°C
- COMPOSITE & ALUMINUM STRUCTURES

RESULTS

- MAXIMUM DEFLECTIONS
  - ALUMINUM - 100 M
  - COMPOSITE - 1.1 M
- ROTATING JOINT DEFLECTIONS
  - ALUMINUM - 0.88 M
  - COMPOSITE - NEGLIGIBLE
- ADDITIONAL STRUCTURAL
  - ANALYSIS INDICATES THAT ALUMINUM STRUCTURE THICKNESS SHOULD BE 30 MILS
  - RESULTS IN 5 TO 10.0 MILLION KG ALUMINUM STRUCTURE WEIGHT COMPARED TO COMPOSITE WEIGHT OF 1.2 MILLION KG
- DESPITE LARGE DEFLECTIONS, ALUMINUM STRUCTURE WILL WORK
- COMPOSITE PROBLEM IS 30 YEAR LIFETIME

ORIGINAL PAGE IS OF POOR QUALITY

RECOMMENDED CHANGES TO REFERENCE SYSTEM
OVERALL GaAs SATELLITE CONCEPT

As a result of the trade studies, several changes to the GaAs solar array satellite reference concept are recommended. This figure illustrates the recommended satellite concept and its characteristics. The concept has 3 bays containing GaAs solar arrays and flat reflectors giving CR=2. The microwave antenna is located in the center of the solar array. Because of partial pointing toward the sun as the seasons vary, the efficiency due to seasonal variations is greater than the reference concept which is assumed to remain perpendicular to the orbit plane at all times. Additionally, the output on the ground is 4.61 GW rather than the reference concept 5 GW because of reductions in efficiency in the microwave transmission chain. Sizing of the solar blanket has been altered to reflect these changes.

ORIGINAL PAGE IS OF POOR QUALITY

RECOMMENDED CHANGES TO REFERENCE SYSTEM
Overall GaAs Satellite Concept

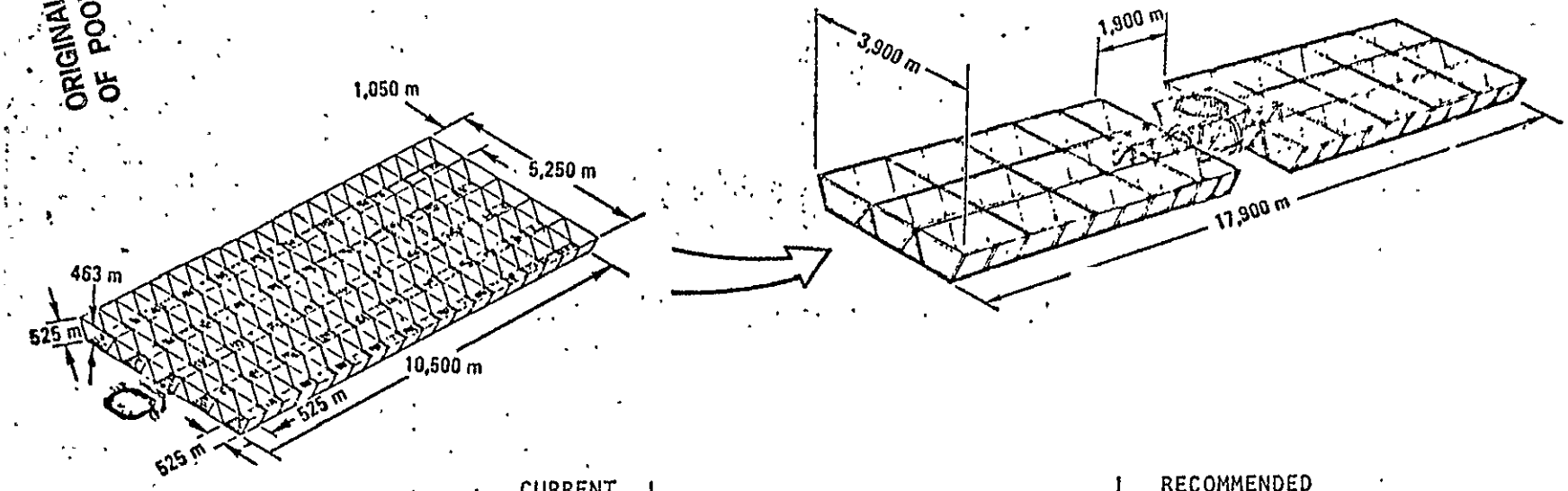

	CURRENT CONCEPT	REASON FOR CHANGE	RECOMMENDED CONCEPT
UTILITY POWER	5 GW	• EFFICIENCY CHAIN	4.61 GW
ANTENNA LOCATION	END	• LOWER MASS (2×10^6 KG) • STRUCTURE INTERFERENCE NOT A PROBLEM	CENTER
BAY GEOMETRY	5x20 BAYS	• EASIER CONSTRUCTION	3x10 BAYS
OVERALL DIMEN.	5.3x10.5 KM	• ARRAY PACKING FACTOR • REDUCED POWER	3.9x17.9 KM
OVERALL EFF.	6.97%	• PARTIAL SUN TRACKING • SMALL CHANGES IN EFF. CHAIN	6.47%
MASS	34×10^6 KG	• RESULT OF CHANGES	30.7×10^6 KG

ALTERNATIVE RECTENNA CONCEPTS

Several rectenna phased array designs have been considered for application to SPS. This figure compares the characteristics of these concepts. The number of elements in the array decrease from top to bottom in this figure. However, as the number of elements decrease, the aperature efficiency decreases. Of the concepts illustrated, the dense array, using stripline interconnections, is easiest to mass produce and install in addition to having a high efficiency. The dense array of stripline interconnected dipoles is the recommended concept.

ALTERNATIVE RECTENNA CONCEPTS

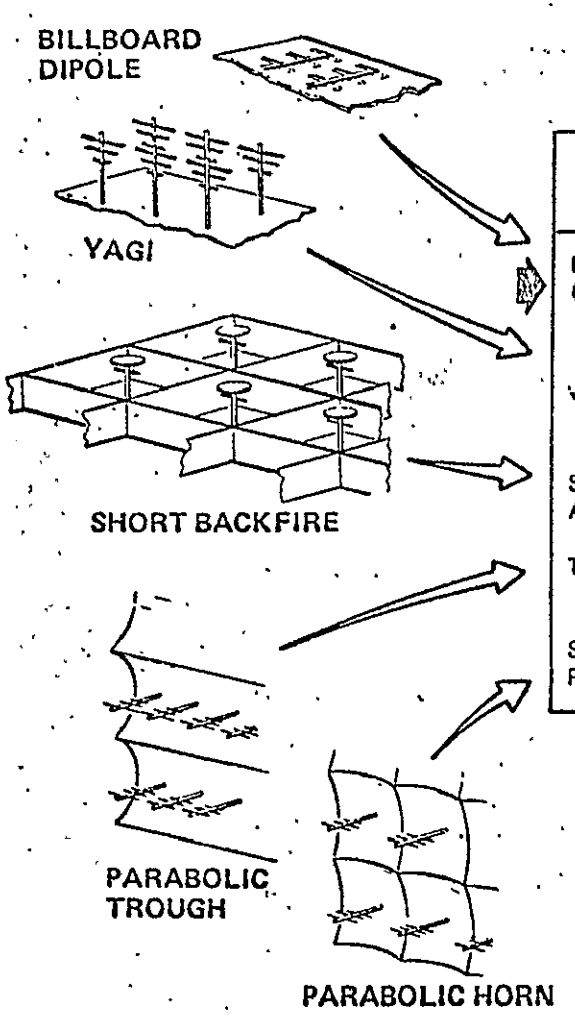

CONCEPT	NUMBER OF ELEMENTS (9 X 15 M AREA)	DESCRIPTION	COMMENTS
DENSE ARRAY (BILLBOARD)	36044	DIPOLES, $\lambda/2$ SPACING SQUARE CLUSTERS OF 49 ELEMENTS	STRIPLINE INTERCONNECT 0.5% MATCHING LOSS } NEEDS STUDY EDGE EFFECTS } I^2R LOSS – 0.5% TO 5.5 KM
YAGI ARRAY	9011	λ SPACING, RECTANGULAR CLUSTERS OF 12 ELEMENTS	MUTUAL COUPLING EFFECT NEEDS STUDY
SHORT BACKFIRE ARRAY	2254	2λ SPACING, SQUARE CLUSTERS OF 4 ELEMENTS	BEAMWIDTH SLIGHTLY TOO NARROW NEEDS STUDY
TROUGH	2205	18 PARABOLIC TROUGHS YAGI FEEDS SPACED λ	APERTURE EFFICIENCY $<80\%$
SQUARE PARABOLAS	540	540 PARABOLAS YAGI FED	APERTURE EFFICIENCY $<70\%$

STATUS OF SOLID-STATE ANTENNA CONCEPTS

Two overall approaches are being considered for the solid state microwave transmission concepts: antenna-mounted and solar array-mounted. The antenna mounted concepts include two means of solving the power conditioning problem: (1) series/parallel connection of the power amplifiers to obtain up to 2,000 volts and (2) the use of a two-stage, high power dc/dc converter approach. The parallel/series approach suffers a severely reduced efficiency because of phase matching. A conversion efficiency of 40% results compared to 85% for klystrons.

Two approaches have been identified for the solar-array-mounted concepts: (1) use of high-power wave-guides to collect and distribute microwave energy from array-mounted solid-state conversion devices to a reflecting antenna and (2) a sandwich approach which has the solar cells on one side and antenna on the other side. Since the sandwich concept must be earth oriented to direct the microwave beam, it is necessary to use reflectors to direct solar energy on the solar cells. Studies of the waveguide approach have indicated very difficult technology problems related to RF mode control. Initial studies of the reflector concept have shown that the approach is economically competative with the reference concept and that the utility power level is only 0.78 GW compared to 5 GW for the reference concept.

STATUS OF SOLID-STATE ANTENNA CONCEPTS

ANTENNA MOUNTED CONCEPTS

- TWO ALTERNATE POWER CONDITIONING APPROACHES
  - SERIES-PARALLEL
  - HIGH POWER DC/DC CONVERTERS
- SERIES-PARALLEL SUFFERS SEVERELY REDUCED EFFICIENCY
  - PHASE MATCHING
  - 40% η COMPARED TO 85% η FOR KLYSTRON
- HIGH POWER DC/DC CONVERTERS MAY PROVIDE ANSWER
  - 2-STAGE CONVERSION
- SEVERAL SOLUTIONS EXIST TO THERMAL PROBLEMS

SOLAR ARRAY MOUNTED CONCEPTS

- TWO ALTERNATIVE SYSTEM APPROACHES:
  - WAVEGUIDE CONCEPT
  - REFLECTOR CONCEPT
- THERMAL PROBLEMS SOLVED BY DEVICE DISTRIBUTION OVER ARRAY SURFACE
- WAVEGUIDE APPROACH HAS PROBLEM OF RF MODE CONTROL IN WAVEGUIDE
  - HIGH RISK APPROACH
- REFLECTOR CONCEPT HAS DC/RF CONVERSION AND RF TRANSMISSION ON REAR OF SOLAR BLANKET
  - LOWER UTILITY INTERFACE POWER - 0.78 GW
  - ECONOMICS COMPETATIVE WITH BASE-LINE CONCEPT

DUAL MICROWAVE ANTENNA SOLID-STATE CONCEPT

Because of the differences between the klystron and solid state systems, the overall microwave system design may be significantly different. In order to meet the thermal constraints, it is necessary to reduce the maximum power density. This can be accomplished by increasing the antenna area while reradiating heat from both sides of the antenna. However, as the antenna area increases, the power output must be decreased to satisfy the 23 mW/cm^2 RF energy constraints in the atmosphere to avoid potential microwave interference with the D and F layers of the atmosphere. Such a concept is illustrated in this figure. The area of each of 2 antennas is about twice the area of the klystron antenna and each antenna has about half the power output of the klystron antenna. Although the total power output of each satellite system is about 5 GW at the utility interface on the ground, two rectennas of about half the area each of the klystron concept rectennas are needed to collect the energy.

DUAL MICROWAVE ANTENNA SOLID-STATE CONCEPT

CR = 2

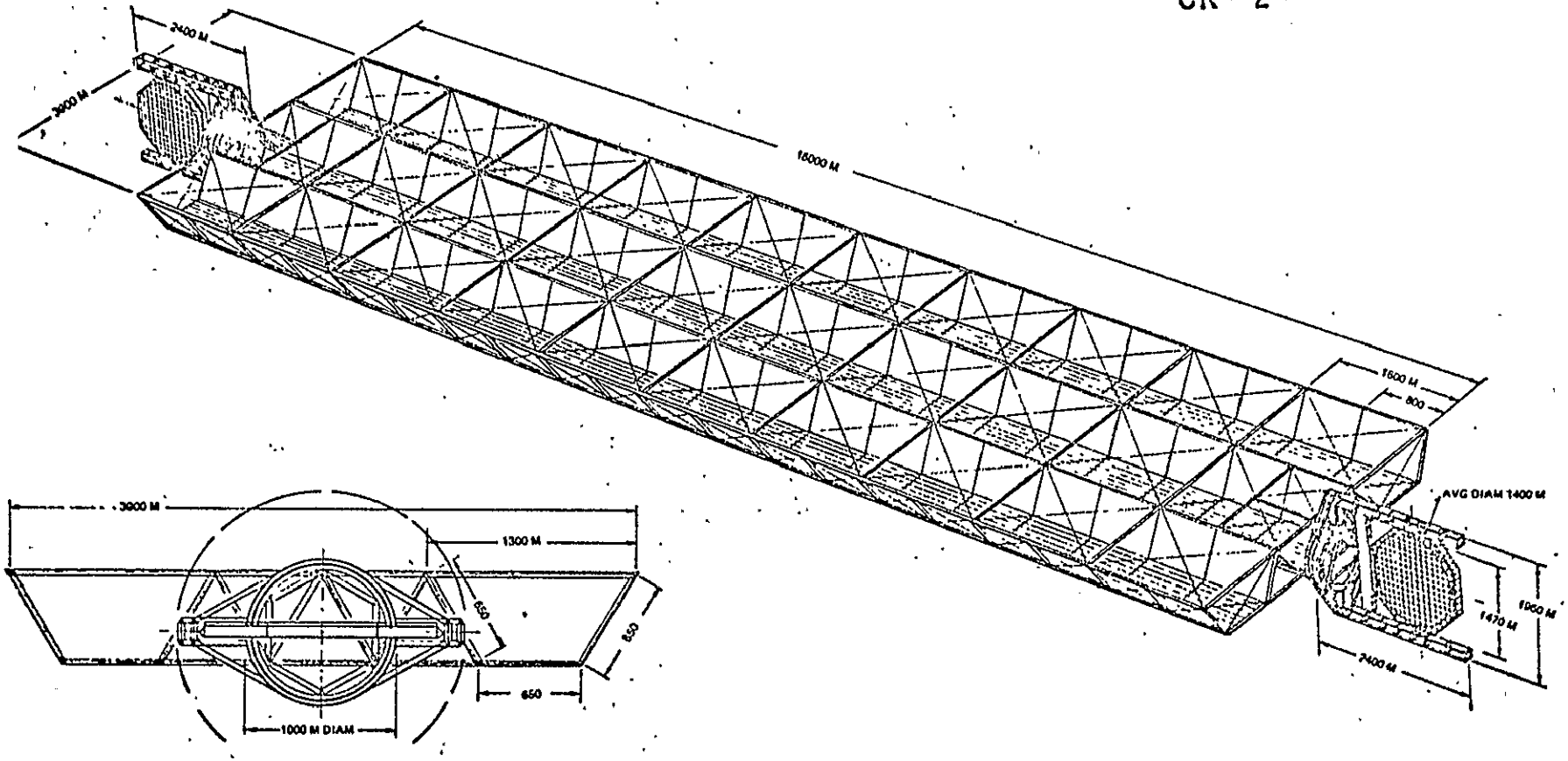

SANDWICH PANEL SPS CONCEPT

Another approach to the solution of both the thermal and power distribution problems is to combine the solar array and the antenna. One concept that uses this approach is shown in this figure. The solid state power amplifiers in this concept are uniformly distributed on the back of the solar array. The thermal problem is solved because of the low density of the power amplifiers, and the power distribution problem is solved by the back to back location of the power source and the solid state power amplifier. However, since the antenna must be earth oriented it is necessary to direct the sunlight on the solar array using large reflectors. The concept in this figure has a nominal concentration ratio of 2. The large reflector rotates to face the sun and reflects the sunlight onto multiple reflectors that concentrate the solar energy on the solar array. Because the maximum microwave energy must be limited to 23 mW/cm^2 near the earth, this particular concept is limited to 0.816 GW of power at the utility interface due to the large microwave antenna aperature. Despite the relatively low power output, preliminary cost estimates indicate that this concept is competitive with the reference concept. This approach allows use of "sandwich panels" that contain the solar cell blanket, the solid-state amplifier, and the transmitting antenna. This concept requires considerable additional study to conduct an evaluation and comparison with the reference concept and the other solid-state microwave systems previously described. This approach could also be used with klystrons.

SANDWICH PANEL SPS CONCEPT

ORIGINAL PAGE IS
OF POOR QUALITY

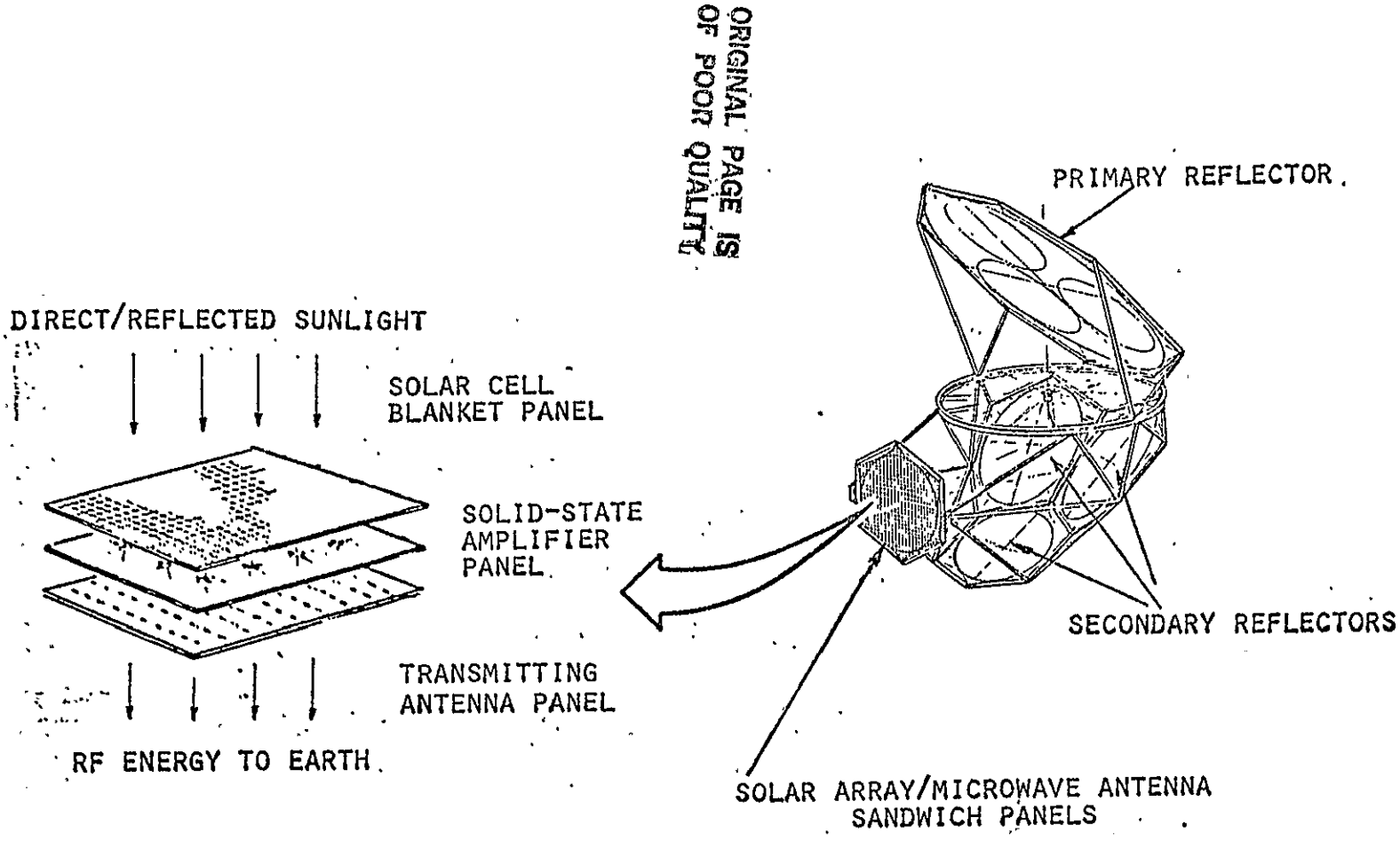

SOME SP/SPS CONCEPT SENSITIVITIES

This chart summarizes the parametric effects of changing several system parameters. The bottom curve assumes that the solar cells have an efficiency which is related to the reference GaAs solar cells. As the concentration ratio on the cell increases, the power output increases even though the diameter of the sandwich panel decreases. As shown, at CR = 4.2, the installation cost decreases from \$2755/kW (CR = 1.9) to \$2366/kW. Increasing solar cell efficiency by 50% (which could be achieved with cascaded solar cells) also increases the power output and reduces installation costs. The upper curve adds the impact of increasing the maximum allowable microwave intensity at the earth from 23 mW/cm^2 to 40 mW/cm^2. Once again, a significant increase in power output and decrease in installation cost occurs.

SOME SP/SPS CONCEPT SENSITIVITIES

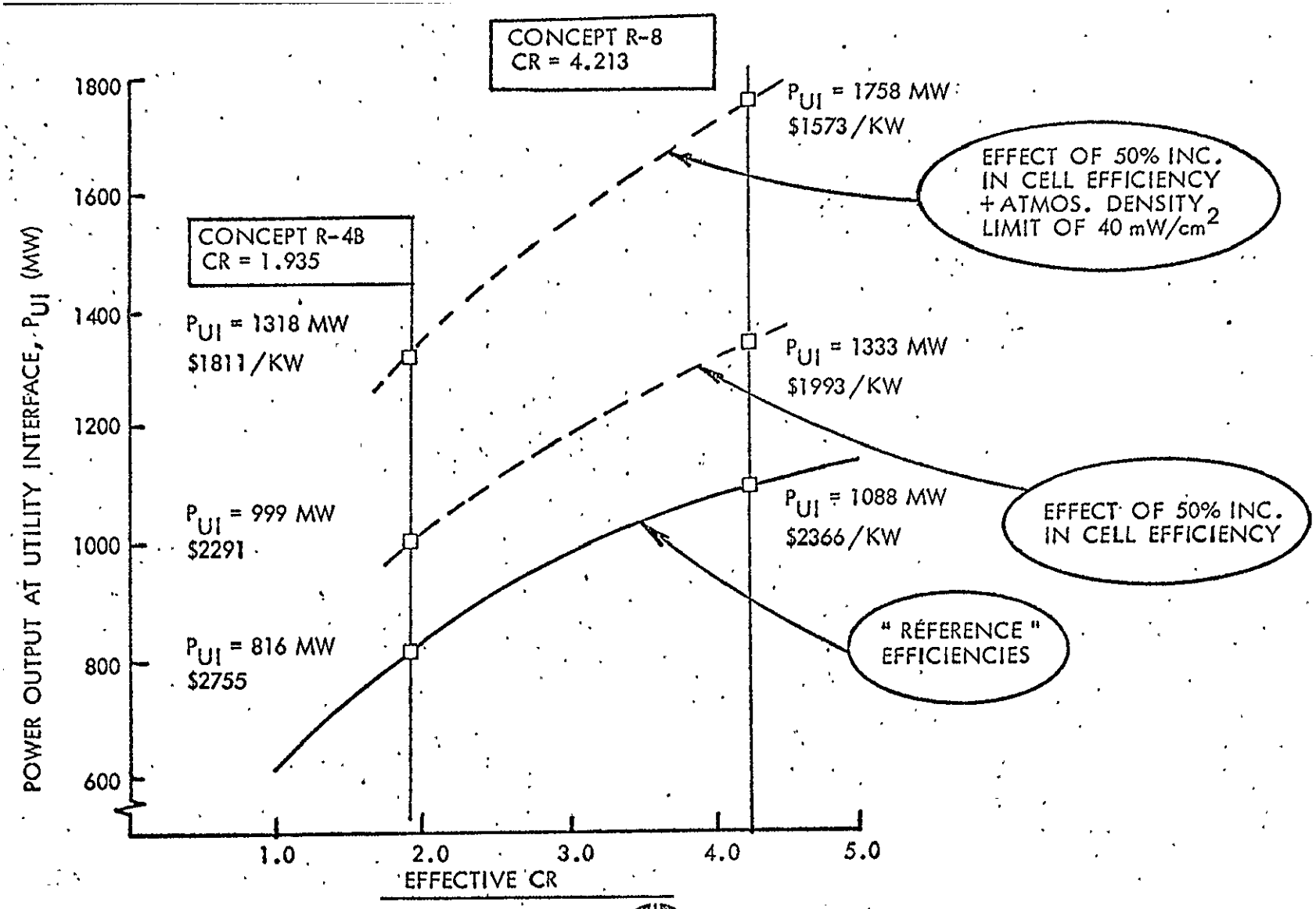

LASER ENVIRONMENTAL IMPACT STUDY SUMMARY

This chart is self-explanatory.

LASER ENVIRONMENTAL IMPACT STUDY SUMMARY

CONSIDERED:

- GLOBAL CLIMATIC CHANGES - NO SIGNIFICANT IMPACT
- WEATHER MODIFICATIONS AT RECEPTOR LOCATIONS - LESS THAN CURRENT SYSTEM
- THERMAL HEATING OF LOWER TROPOSPHERE - LOCAL TURBULENCE
- ENVIRONMENTAL IMPACT ON BIRDS & INSECTS - UNCERTAIN
- IONOSPHERIC LASER/PLASMA INTERACTION - NO SIGNIFICANT IMPACT
- PERTURBATION OF PLASMA CHEMISTRY IN MESOSPHERE AND THERMOSPHERE PROBABLY NEGLIGIBLE (NEEDS CONFIRMING RESEARCH)
- SERIOUS ENVIRONMENTAL MODIFICATIONS - NOT POSSIBLE

GENERALLY CONCLUDED NO DANGER OF SERIOUS ENVIRONMENTAL DAMAGE COULD BE FOUND

SIGNIFICANT LASER TECHNOLOGY IMPROVEMENT NECESSARY TO ACHIEVE SPS GOALS

ORIGINAL PAGE IS
OF POOR QUALITY

COMPARISON OF CONSTRUCTION CONCEPT APPROACHES

Two basic approaches, illustrated in this figure were considered for the SCB: a single-pass facility that constructs all bays simultaneously and a multipass serpentine facility that constructs one bay at a time. These approaches were compared to develop design data, construction functions and timelines, crew functions, and crew size.

The multipass serpentine facility is attached to tracks on a translation platform. The platform consists of three sections attached to one another by sliding guideways which permit lateral movement during repositioning operations. Elevating frame attach fittings are used to secure the platform to the partially completed satellite to permit movement of the facility relative to the satellite. Such a movement is required as each longitudinal bay is completed. All elements of the satellite are constructed in this facility, including the solar array and the microwave antenna.

The single-pass construction facility does not require a translating platform because it never has to translate laterally relative to the satellite. All of the construction functions occur simultaneously in the longitudinal direction for all three troughs. The solar blankets are installed by means of dispensers which are located along the bottoms of the troughs. The reflector dispensers are located on the diagonals of each trough. The longitudinal tribeams are continuously manufactured in the tribeam facilities. Lateral tribeams are simultaneously manufactured to the proper length and are attached to the longitudinals.

The differences in facility mass, crew size, construction equipment, and construction complexity for the serpentine and single pass construction concepts are listed on this figure. The satellites evaluated consist of three and four trough configurations with either an end-mounted or center-mounted antenna. (The effect of this variation on the construction time, crew size and supporting equipment is negligible.) The relative complexity considers the operations attendant to fixture and platform translation required for serpentine construction as opposed to the single pass concept. The crew sizes reflect average manloading, since the sequence of construction operations (particularly for the single pass concept) permits return of some personnel to earth prior to satellite completion. Support equipment requirements (e.g., tribeam fabricators) vary with the construction concept. For single pass construction, all troughs are completed simultaneously instead of in series. However, the serpentine fixture is required to operate from both sides, which requires two sets of dispensing equipment. The serpentine method results in a smaller crew size, and in general, less supporting equipment. The SCB mass for the two concepts is essentially the same. The platform accounts for a large percentage of the serpentine SCB mass. Precursor operations attendant to constructing a platform almost 3 km long in three sections which translate relative to one another are formidable. The sequence of translating these sections and the construction fixture many times during the construction of one satellite involves considerable operational complexity and risk. In addition, the concept involves several sequences of securing and releasing the platform to and from the partially completed satellite structure (2 meter tribeam sections) by means of elevating attach mechanisms. Detailed study will be required to evaluate the feasibility of this operation relative to the stress concentrations involved. For these reasons, the single pass concept is preferred.

COMPARISON OF CONSTRUCTION CONCEPT APPROACHES

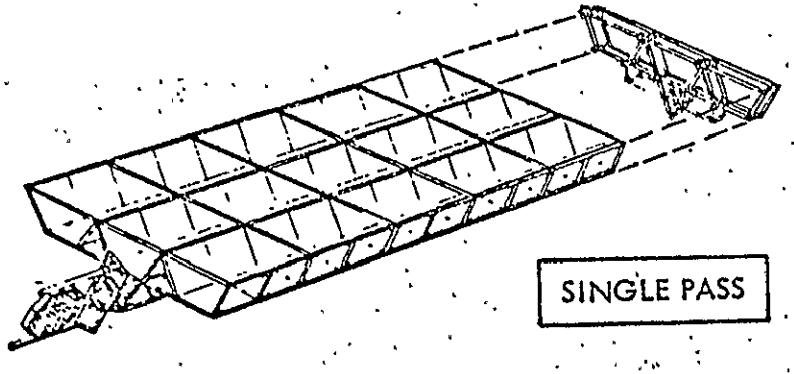

SINGLE PASS

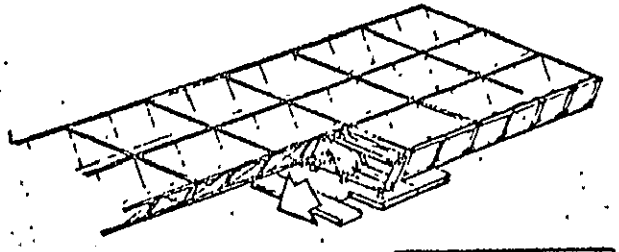

MULTI-PASS SERPENTINE

• CONSTRUCTION TIME	108 DAYS (180 DAYS)	180 DAYS
• CREW SIZE (AVERAGE)	376 (332)	266
• CONST. FACILITY MASS (KG)	5.3×10^6	5.2×10^6
• RELATIVE CONST. COMPLEXITY	1	4.5
• TRIBEAM FABRICATORS	28	26

ORIGINAL PAGE IS OF POOR QUALITY

SINGLE-PASS SATELLITE CONSTRUCTION BASE (SCB)

The satellite construction base (SCB) for producing the three trough, center-mounted antenna is shown. The SCB consists basically of three trough fixtures used for simultaneous construction of the three troughs, and a center fixture to fabricate both the rotary joint and the structure which connects the two wings and provides support for the rotary joint.

The solar blankets are installed by means of dispensers which are located along the bottoms of the lower troughs, 36 - 40, and the elevated trough section 38 and 39 (where a short section of elevated solar blanket is required because of interference created by the extension of the center connecting structure into each wing).

The reflector dispensers are located on the diagonals of each trough as designated by 41 - 43.

The crew habitat, power modules, warehousing and docking facilities, 44, are located at the top of the SCB center structure.

SINGLE-PASS SATELLITE CONSTRUCTION BASE (SCB)

EQUIPMENT & LOCATION DESCRIPTIONS

(1)—(10) LONGITUDINAL TRI BEAM FABRICATORS

(11)—(17) CONNECTING CENTER STRUCTURE ROTARY JOINT SUPPORT TRIBEAM FABRICATORS

(18)—(26) CROSSBEAM TRIBEAM FABRICATORS

(27)—(32) DIAGONAL TRIBEAM FABRICATOR

(33)—(35) CENTER STRUCTURE CROSSBEAM & ROTARY JOINT TRIBEAM FABRICATOR

(36)—(40) SOLAR BLANKET DISPENSING AREAS

(41)—(43) REFLECTOR DISPENSING AREAS

(44) CENTRAL HABITAT AND WAREHOUSING

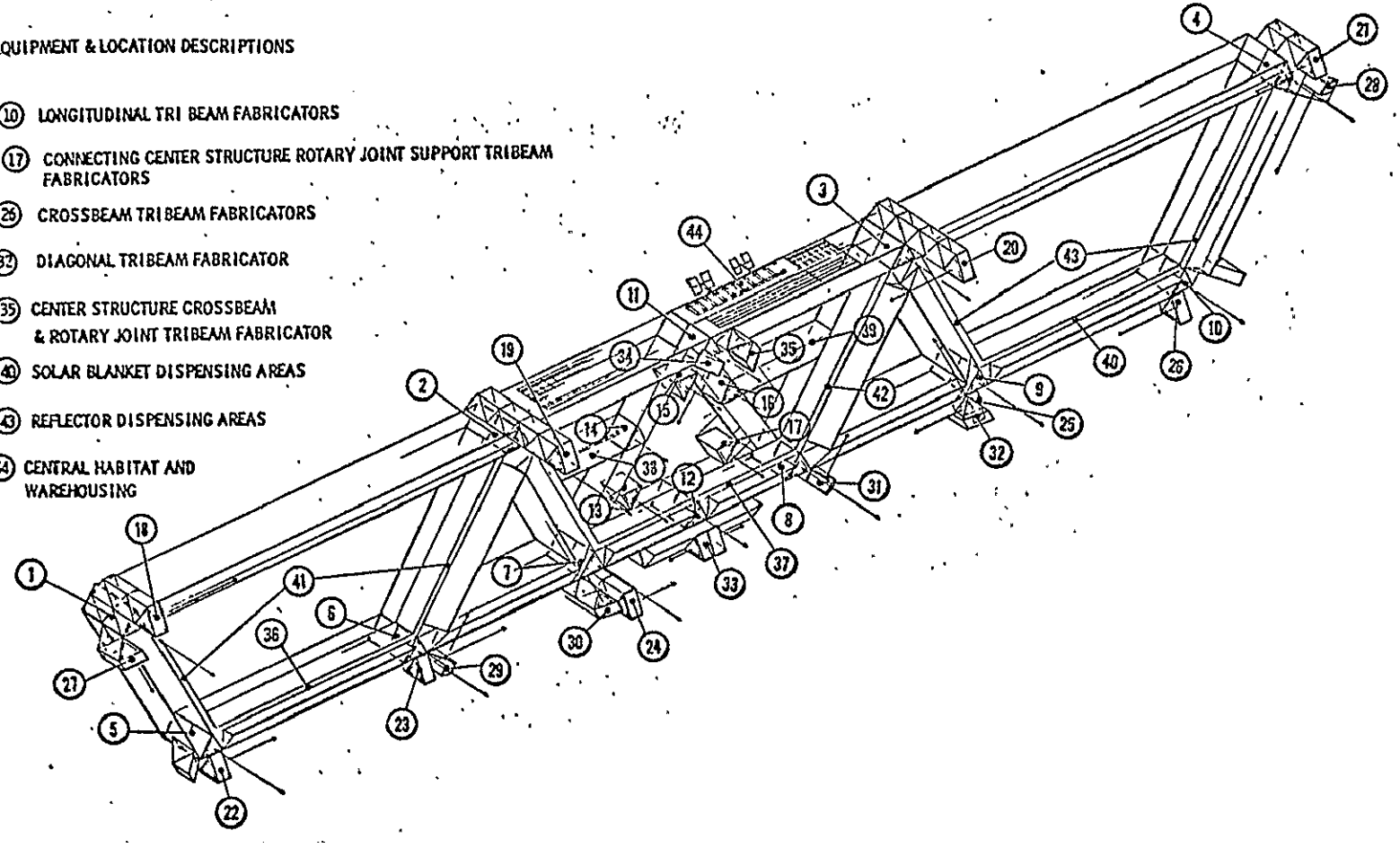

ANTENNA SUPPORTING STRUCTURE
ASSEMBLY SEQUENCE

This figure illustrates the sequence of events for construction. The construction facility, previously shown, initially constructs the rotary joint. A small, separate facility completes construction of the antenna section. The main construction facility then constructs the solar array section. The timeline used for this sequence assumes that total construction is accomplished in 180 days.

ANTENNA SUPPORTING STRUCTURE ASSEMBLY SEQUENCE

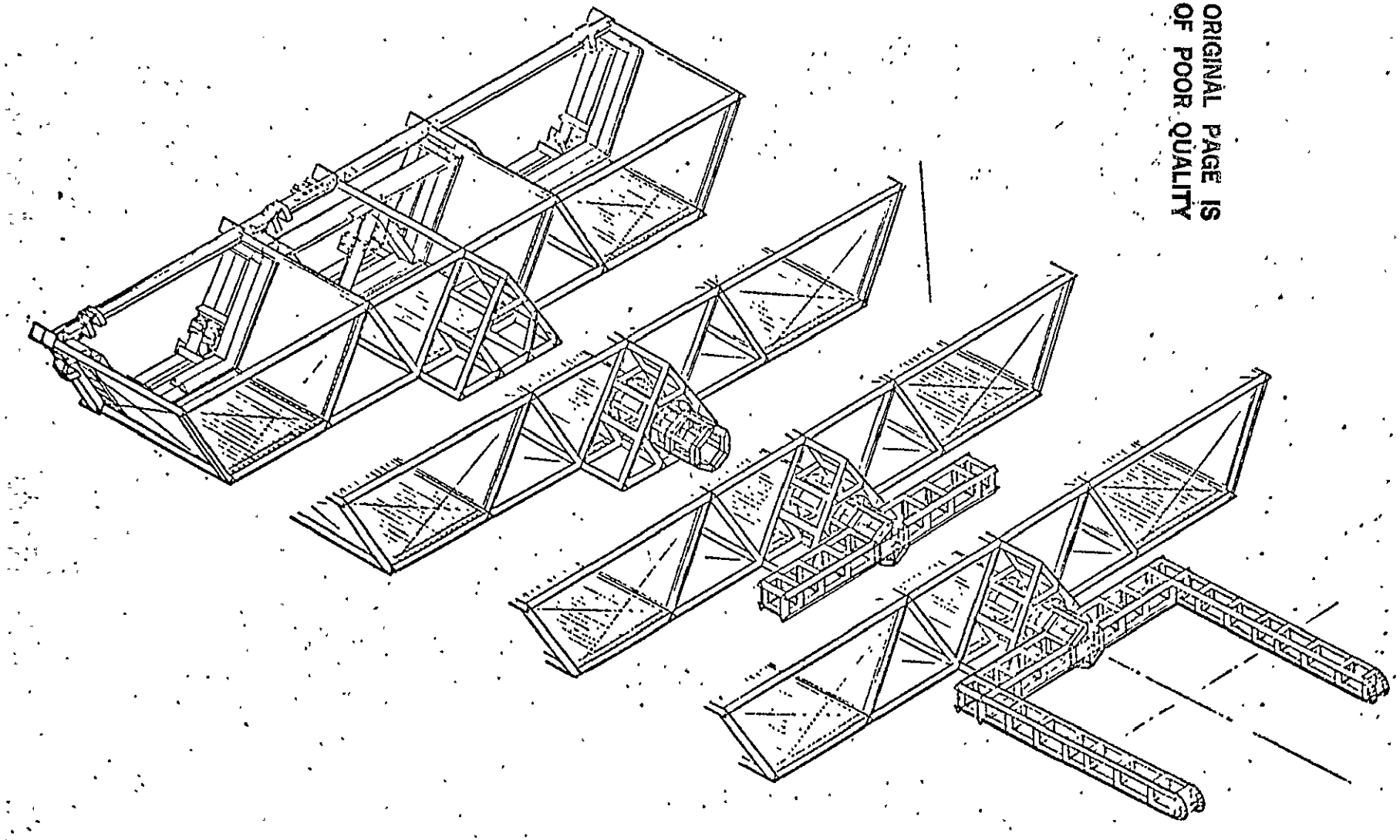

ORIGINAL PAGE IS OF POOR QUALITY

TYPICAL SOLAR ARRAY BAY CONSTRUCTION

The perspective drawing illustrates the near-completion of the first three 800-meter "bays" in the lower corner of the satellite with a section of the outside reflector panels cutaway. It can be seen that the solar blankets are laid out in horizontal strips but that the reflector panels are vertically oriented. The structure of an 800-meter bay is estimated to take one 8-hour shift to fabricate. During this time, the solar blankets are "played out" - from 25-meter rolls - and edge-attached to longitudinal lines of composite materials; the reflectors are refurled (to be shown later) and also loosely constrained by vertical lines. Upon reaching the end of a bay, the construction facility is stopped and, during the next five 8-hour shifts, the cross frame members are attached, the solar blankets are secured and the reflector panels are tensioned.

TYPICAL SOLAR ARRAY BAY CONSTRUCTION

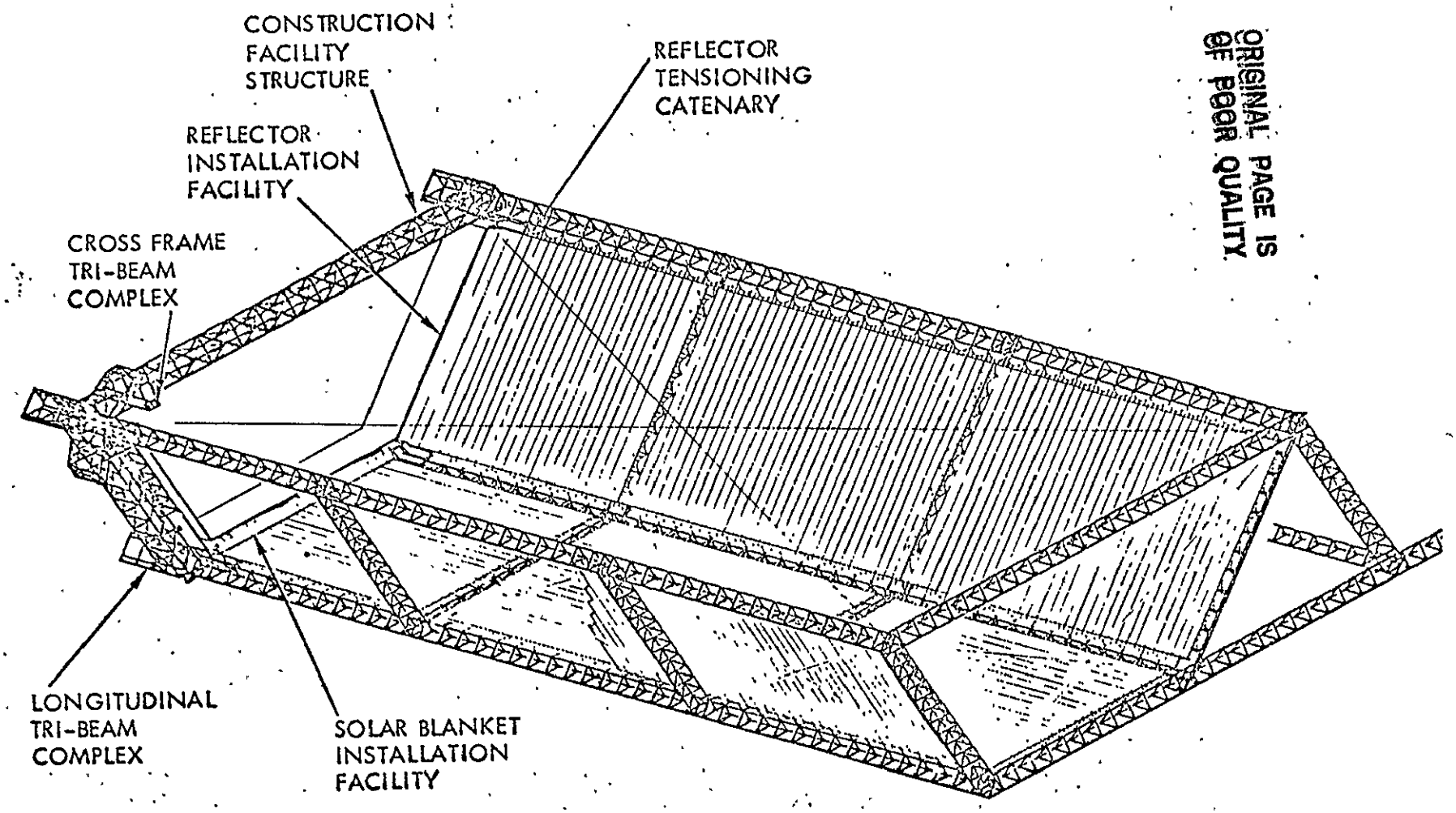

ORIGINAL PAGE IS OF POOR QUALITY

REFLECTOR PACKAGING AND INSTALLATION

The reflector panels, measuring 600-m × 800-m, are pleated at 25-m intervals to produce an accordian type fold as shown. They are then rolled along the plane of the end pleat into a roll 25-m long and 1.2-m diameter which is the configuration for transporting into orbit.

When installed, each reflector panel is suspended within the 800-m bay by longitudinal catenaries attached to the upper and lower longerons and by leading and trailing edge catenaries attached to the forward and aft diagonal members of the transverse frames. The catenaries are attached to the trailing and leading diagonal transverse beams and to the longerons. Two panels are required for each 800-m bay of each trough or a total of 144 panels for the entire satellite.

REFLECTOR PACKAGING AND INSTALLATION

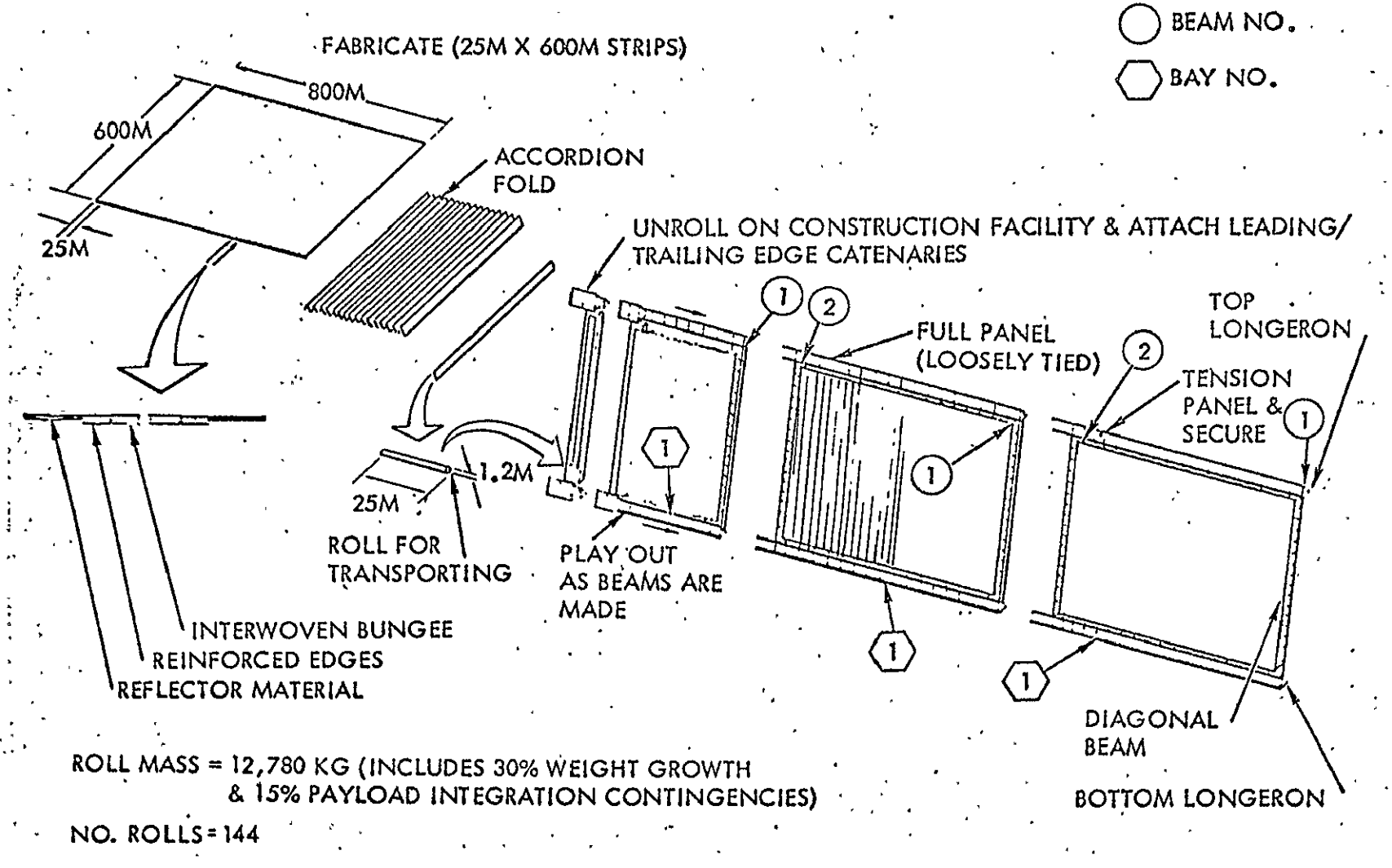

ROLL MASS = 12,780 KG (INCLUDES 30% WEIGHT GROWTH & 15% PAYLOAD INTEGRATION CONTINGENCIES)

NO. ROLLS = 144

ORIGINAL PAGE IS OF POOR QUALITY

SOLAR BLANKET INSTALLATION CONCEPT

(The callouts indicated by the circled numbers are given on the two pages following the figure.)

The solar blanket in each 800 m long bay is a structurally independent installation suspended by side and end catenaries attached to the longerons and cross beams respectively, and by longitudinal cables stretched between the blanket strips. Each blanket strip is approximately 25 m wide and 750 m long, and is packaged in a 25 m wide roll by 0.6 m in diameter. Each two bays of solar blankets are electrically connected in series, constituting a functional module which produces the required voltage.

Initially the blanket rolls are transported from the SCB warehouse area by a transporter/loader (1) which inserts the rolls into the dispensers (6). The leading edge of the blanket strips with end catenaries attached, are then threaded through the roller arrangement and attached to the trailing edge of the cross beam just completed. The longitudinal cables to which the side edges of the blanket will be fastened are threaded from the cable dispenser (13) and attached in a similar manner. The longitudinal catenaries are fabricated on the middle deck, fed into the dispensing spindle (15) and then attached to the cross beam trailing edge.

Solar blankets and catenaries are attached to the longitudinal cables by foldover tabs which are applied by automatic fastening equipment. As the cross beam advances the blanket strips, longitudinal catenaries and cables are payed out. The two outside cables are attached to the longitudinal catenaries, the two longitudinal catenaries to their respective longerons, and the inside edges of adjacent blanket strips to their stabilizing cables. Upon completion of the bay and the next following cross beam, the trailing edges of the blankets (i.e., the trailing transverse catenaries) and the trailing end of the longitudinal catenaries are attached to the leading edge of that cross beam. The installation is then tensioned and electrical connections completed.

ORIGINAL PAGE IS
OF POOR QUALITY

SOLAR CELL BLANKET INSTALLATION CONCEPT

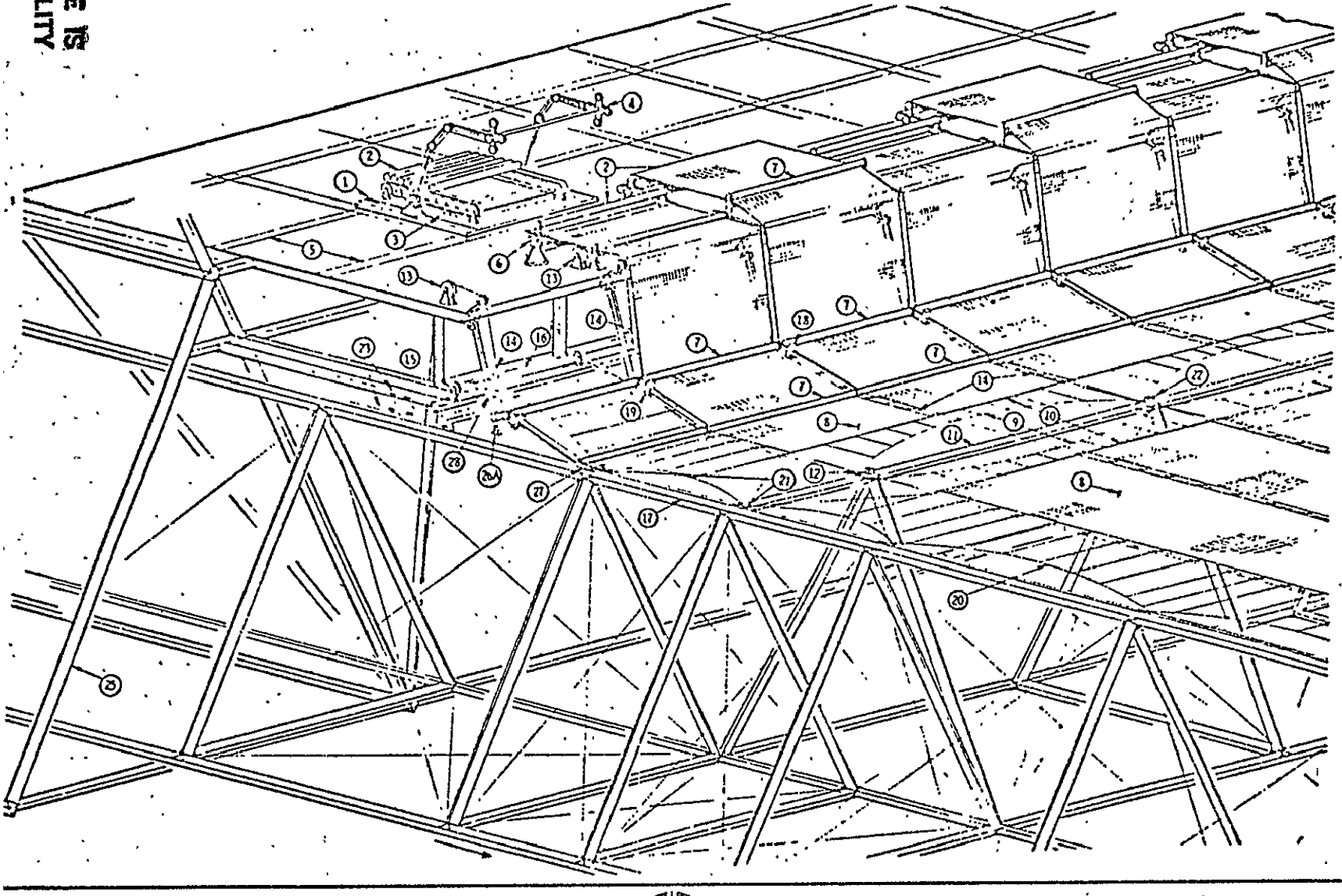

MANNED OPERATIONS AT SOLAR ARRAY INSTALLATION STATIONS

The primary operations occurring at the upper, middle, and lower deck stations during beam fabrication and solar blanket installation are identified. The locations of the manned manipulator modules (MMM) required to support the installations also are shown. The modules are mounted on transverse tracks and are spaced so that each module services approximately one-fourth of the 27 installation stations across the span of the crossbeam.

MANNED OPERATIONS AT SOLAR ARRAY INSTALLATION STATIONS

UPPER DECK

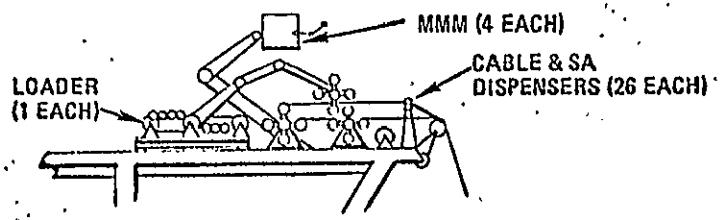

- DELIVER SA ROLLS TO LOADER
- LOADER INSERTS ROLLS IN DISPENSERS
- ROLLS THREADED THRU ROLLER SYSTEM
- DISPENSER MONITORING

4 MEN

MIDDLE DECK

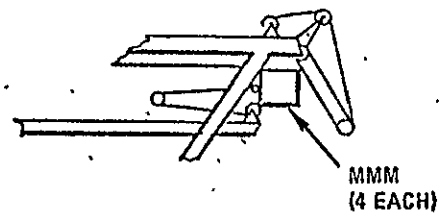

- FABRICATE & THREAD LONG CATENARY
- CATENARY/CABLE ATTACH MONITORING

4 MEN

LOWER DECK

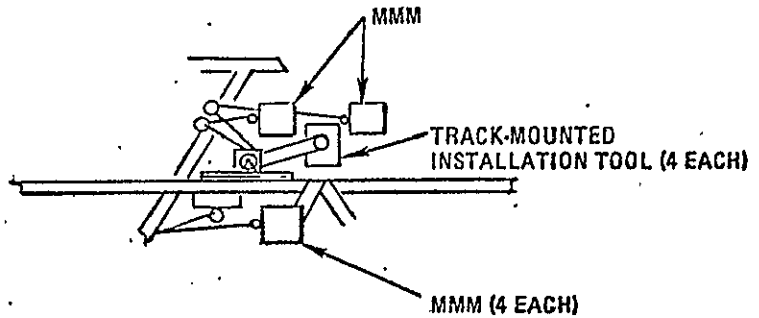

- INSTALL SADDLE CLAMPS
- INSTALL SWITCH GEARS, SM & RAC ASSP
- INSTALL INSULATION MOUNTS
- ATTACH & TENSION SA'S
- INSTALL FEEDER & DM&C BUS
- MAKE ELECTRICAL CONNECTIONS

12 MEN

ORIGINAL PAGE IS OF POOR QUALITY

ANTENNA SUPPORTING STRUCTURE FABRICATION

This series depicts the sequence of antenna construction operations. Initially, the yoke base is constructed in place across the face of the rotary joint utilizing a beam fabricator (or two beam fabricators working in opposite directions) which is free flown from its storage location on the SCB into its initial position and attached to the slip ring structure.

Upon completion of the yoke base, the beam fabricator is repositioned to construct each yoke arm as shown. The strengthening ties at the corners are fabricated elsewhere on the facility and then moved into place.

Following completion of the yoke arms, a beam fabricator is used to construct utilizing the yoke base as a platform. The gantry is then attached to tracks on the yoke arms. Elevating mechanisms at each end of the gantry provide for moving it to greater or lesser depths within the arms as may be required in the antenna construction and RF mechanical module installation operations. The elevating mechanisms also provide for raising the gantry clear of the structure for stowing along the yoke base when not in use.

ANTENNA SUPPORTING STRUCTURE FABRICATION

YOKE ARM CONSTRUCTION

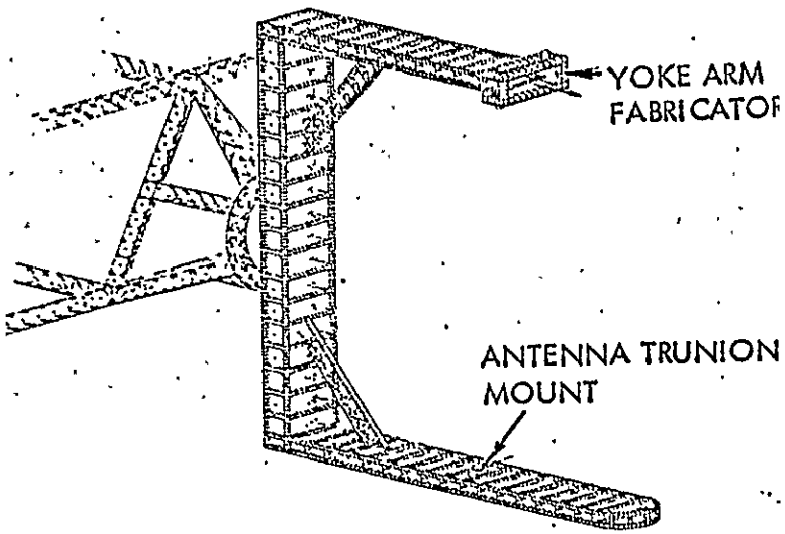

YOKE AND GANTRY INSTALLATION

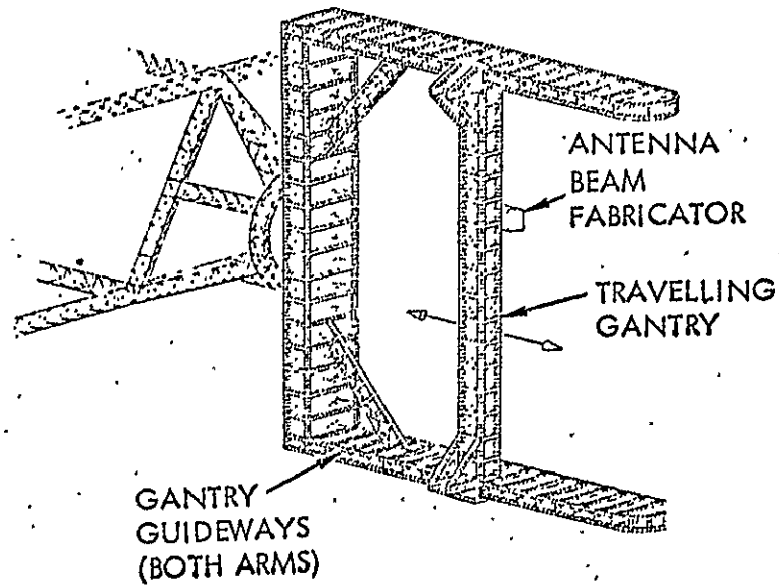

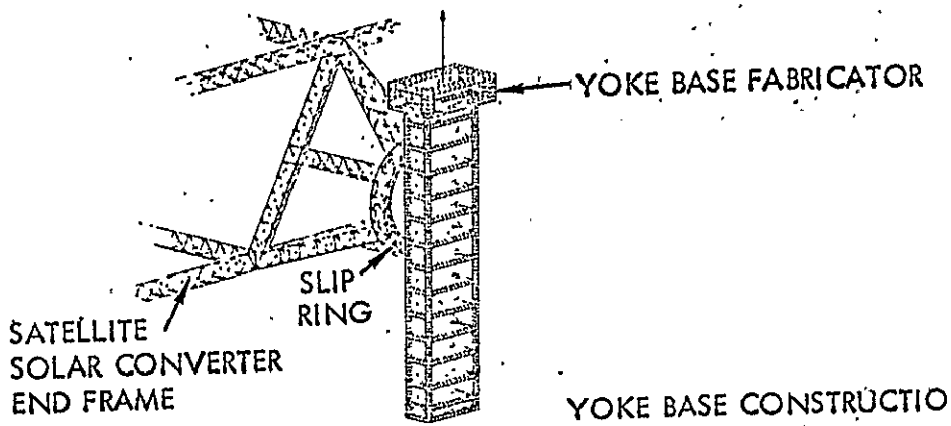

YOKE BASE CONSTRUCTION

ORIGINAL PAGE IS
OF POOR QUALITY

ANTENNA PRIMARY STRUCTURE FABRICATION

The antenna primary structure is constructed by beam fabricators mounted to the lower side of the gantry. Initially, the antenna center beam structure which attaches to the trunnions is fabricated and installed in the trunnions, which are then locked into position. Following this operation, the gantry-mounted fabricator progress outward from the center beam, completing one-half of the structure, in successive passes. The gantry is then relocated and the fabricator constructs the remaining half of the antenna. After removal of the fabricator, the gantry is then used for installation of secondary structure and RF elements.

ANTENNA PRIMARY STRUCTURE FABRICATION

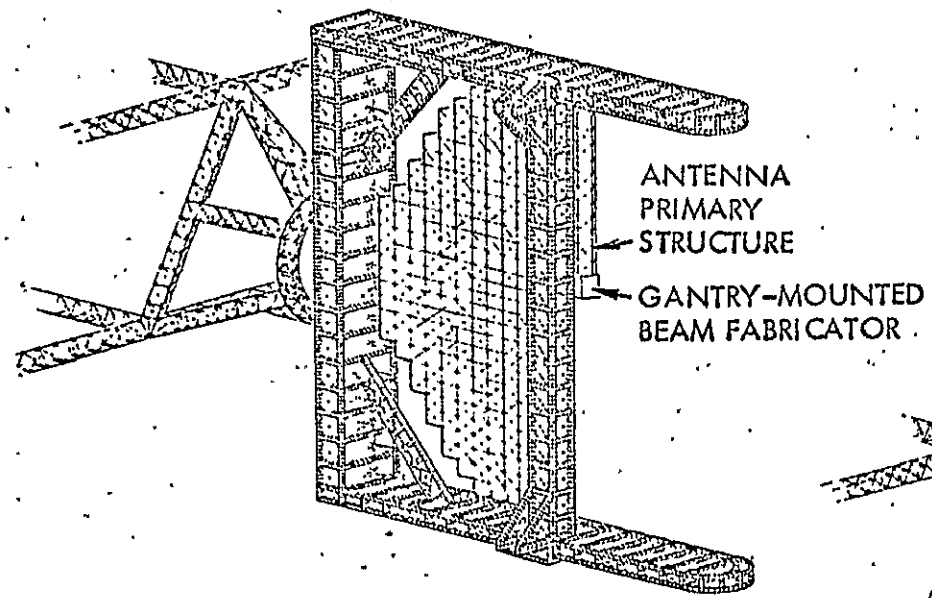

ANTENNA PRIMARY STRUCTURE
FABRICATION

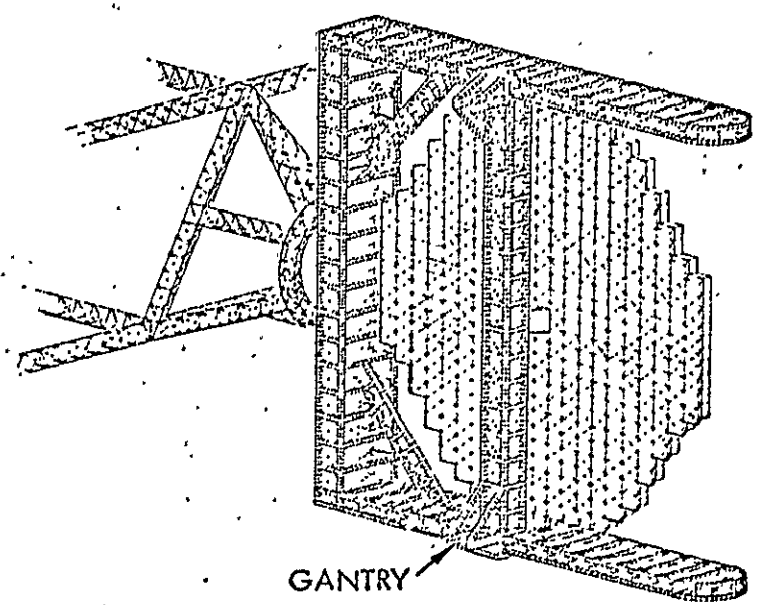

SPACE-FRAME ANTENNA CONSTRUCTION CONCEPT
END MOUNTED

ORIGINAL PAGE IS
OF POOR QUALITY

OVERALL SATELLITE CONSTRUCTION SCENARIO

Because of the large size of the SCB, it is necessary to define the approach to its construction starting with the basic space shuttle resources and elements that can be brought up from earth in the shuttle. A detailed study of this process was conducted, including an overview of the total build-up to start the satellite construction process at geosynchronous orbit.

The overall sequence of events is illustrated in the figure. The initial step in satellite precursor operations is establishment of a LEO base as shown in the lower left of the figure. Crew and power modules are transported to LEO by Shuttle derivatives and assembled. When the base is fully operational, Shuttle external tanks are delivered and mated to form construction fixtures for SCB construction. This figure shows a completed SCB. Since the more economical HLLV will not be available and since overall plans specify an EOTV test vehicle, it is probable that only the center trough of the SCB would be constructed initially. This trough would be used to fabricate the pilot plant EOTV with antenna. After proof of concept and SPS go-ahead, the remainder of the SCB would be completed, the fleet of EOTV's constructed, and the SCB transferred to GEO, using one or more EOTV's for propulsion and altitude control. Upon reaching GEO, satellite construction would commence, with the logistics support as shown at the right of the figure.

OVERALL SATELLITE CONSTRUCTION SCENARIO

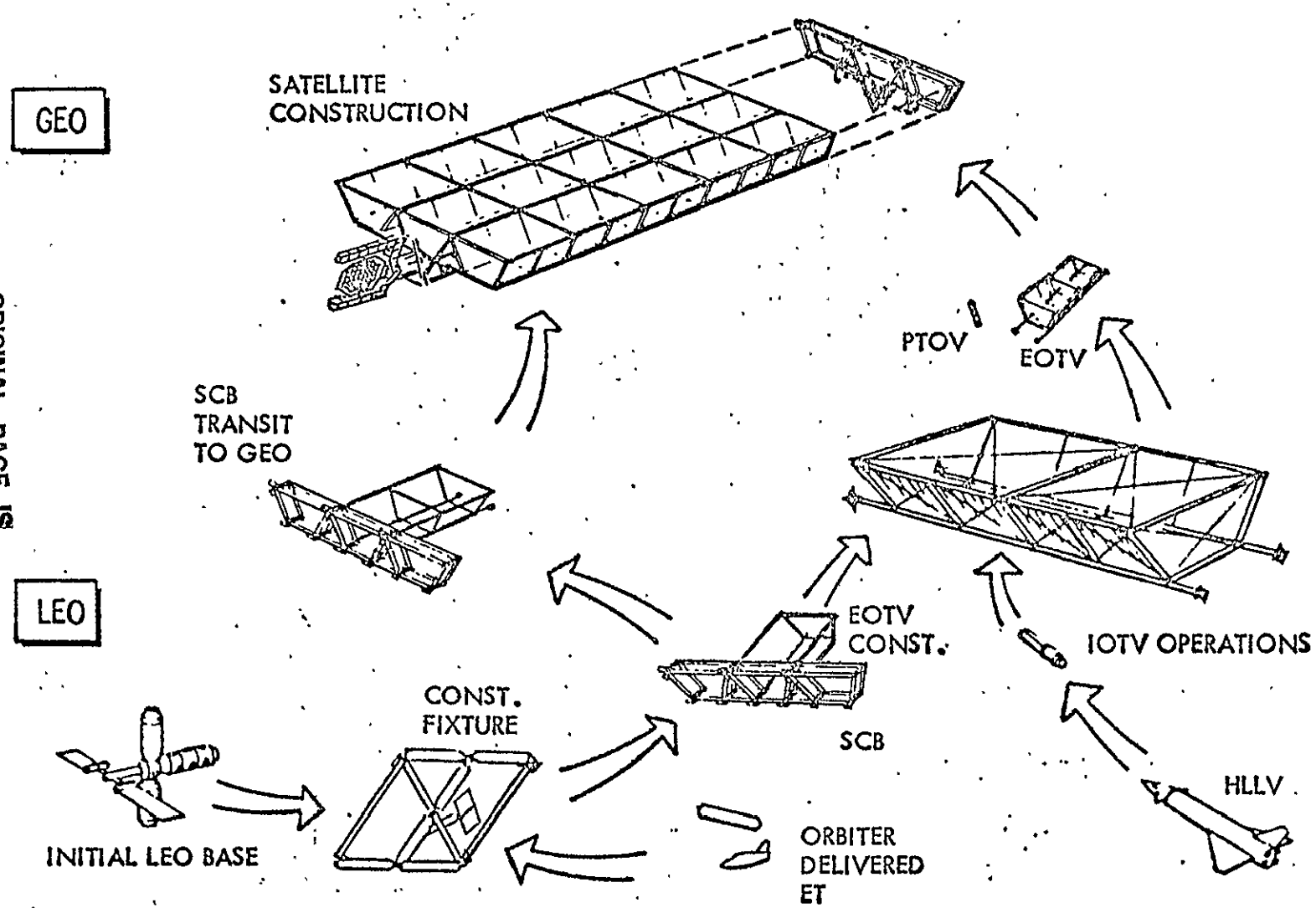

ORIGINAL PAGE IS OF POOR QUALITY

TRIANGULAR ELEMENT FABRICATION FACILITY

This facility is for the purpose of producing the longitudinal and cross-beam pods which will be installed in the SCB for subsequent construction of EOTV and satellite tribeams. It is comprised of six shuttle ET's joined together as shown. The structure which attaches the orbiter to the aft section of the ET is utilized for joining the ET's and is augmented by pre-fabricated bracing delivered by the orbiter. A triangular element comprised of 2 meter tribeams is mounted within the triangle formed by the ET's and provides the structure required for mounting the 2 meter beam machines which are used for constructing the outer triangle of the tribeam pod, or fabricator. A total of six beam machines are required; three for longitudinal beams and three for crossbeams. A crew facilities and power module, shown at the left of the chart, provides crew habitat and the electrical power required to operate life support and the beam machines. Reaction control pods attached to the ET's provide the required altitude control.

TRIANGULAR ELEMENT FABRICATION FACILITY

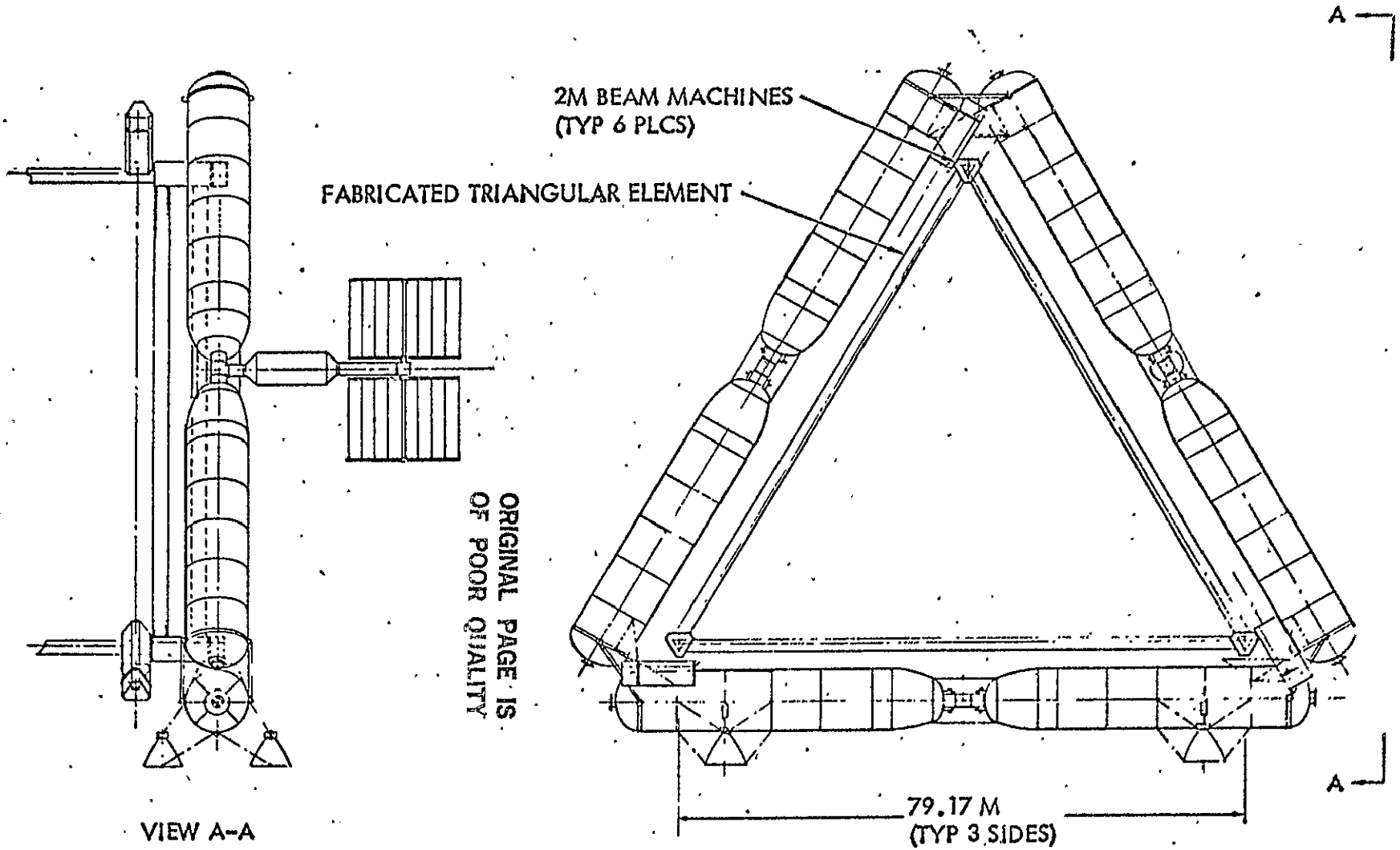

ORIGINAL PAGE IS
OF POOR QUALITY

MOBILE 79M GIRDER FABRICATION FACILITY

The primary structure of the SCB consists of a diamond cross section formed by two triangles. A mobile diamond-shaped fixture formed by joining 8 orbiter external tanks is utilized for SCB primary structure fabrication. The beam machines are located at the tips of the structure enclosed by the external tanks. Nine machines are required to construct the four longerons, the four cross beams and the diagonal beam. A combination crew and power module provides crew facilities and electrical power.

MOBILE 79M GIRDER FABRICATION FACILITY

ORIGINAL PAGE IS
OF POOR QUALITY

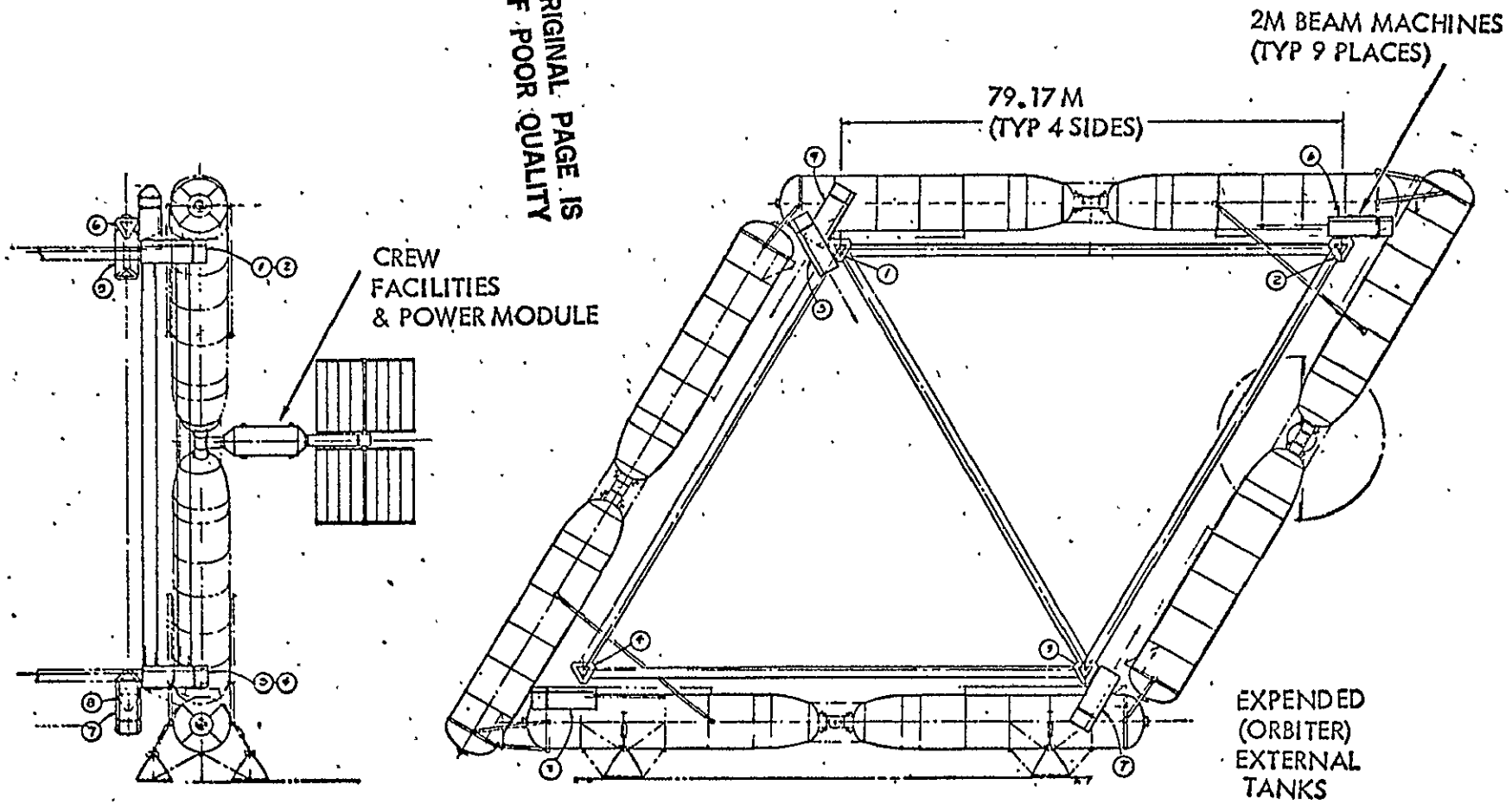

PARALLEL FABRICATION OF EOTV'S

Upon completion of the SCB in LEO, construction of the EOTV fleet can commence. Since the EOTV cross section is the same as one trough of the satellite, the SCB is utilized for the EOTV construction as shown in this figure. However, it is probable that the SCB would be used initially to construct an EOTV with end-mounted antenna as a test article for proof of concept. As was previously mentioned, it is likely that the SCB will not be completely constructed until after the proof of concept demonstration. Only the center portion would be built for this purpose. When it is fully constructed, the SCB could produce two EOTV's simultaneously as shown in this figure.

PARALLEL FABRICATION OF EOTV'S

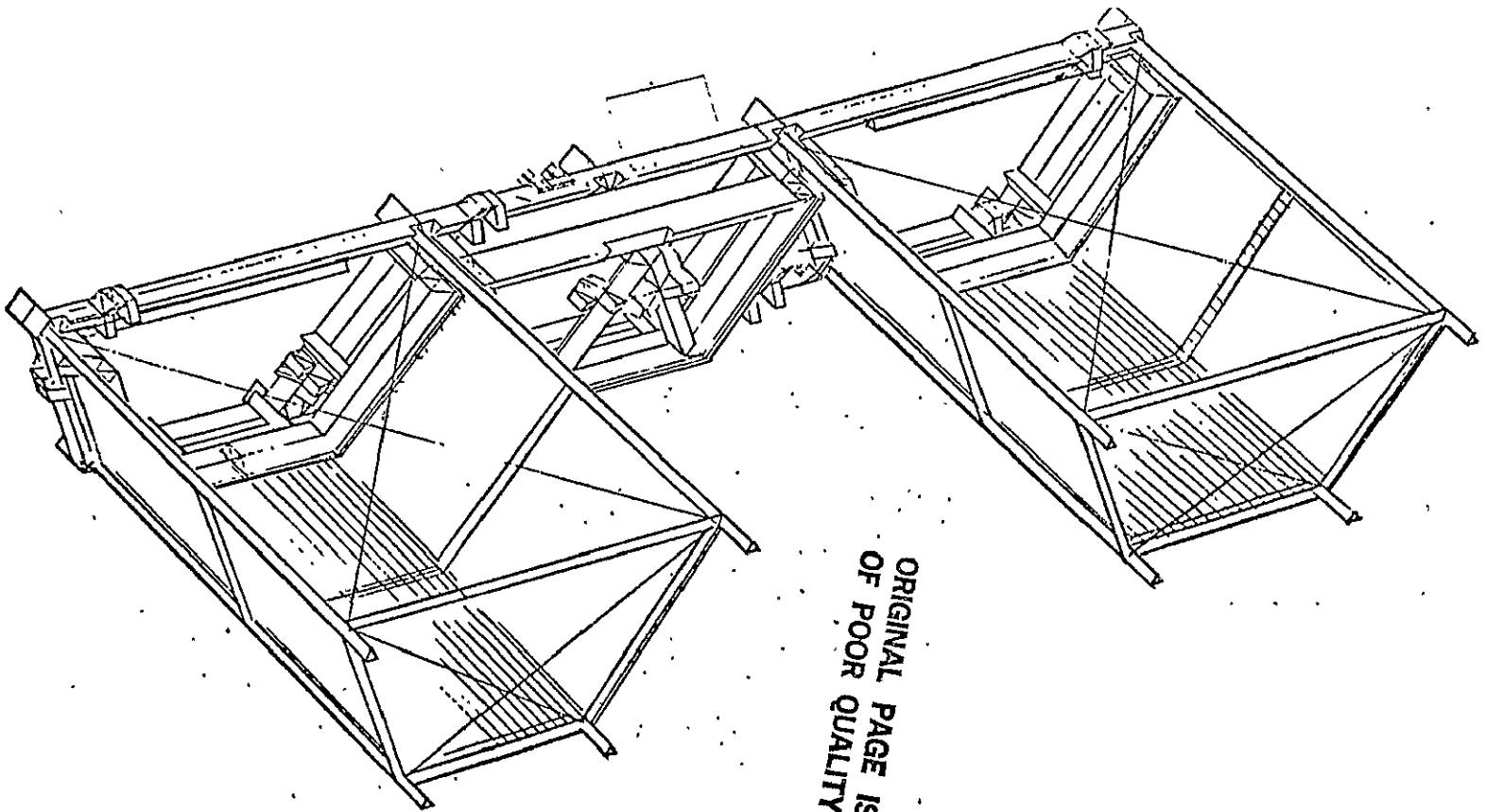

ORIGINAL PAGE IS
OF POOR QUALITY

OPERATIONAL GROUND RECEIVING FACILITY (RECTENNA)

This perspective is a representation of a typical operational ground site. The receiving panels are arranged in rows within the inner ellipse. Immediately outside the eclipse is a series of power poles which carry the 40 kV dc buses around the perimeter of the panel installation. The 500 kV ac towers also ring the basic ellipse, but at a greater distance. The power conversion stations are located between the two arrays of power transmission lines. The entire site is fenced in for security as shown.

OPERATIONAL GROUND RECEIVING FACILITY (RECTENNA)

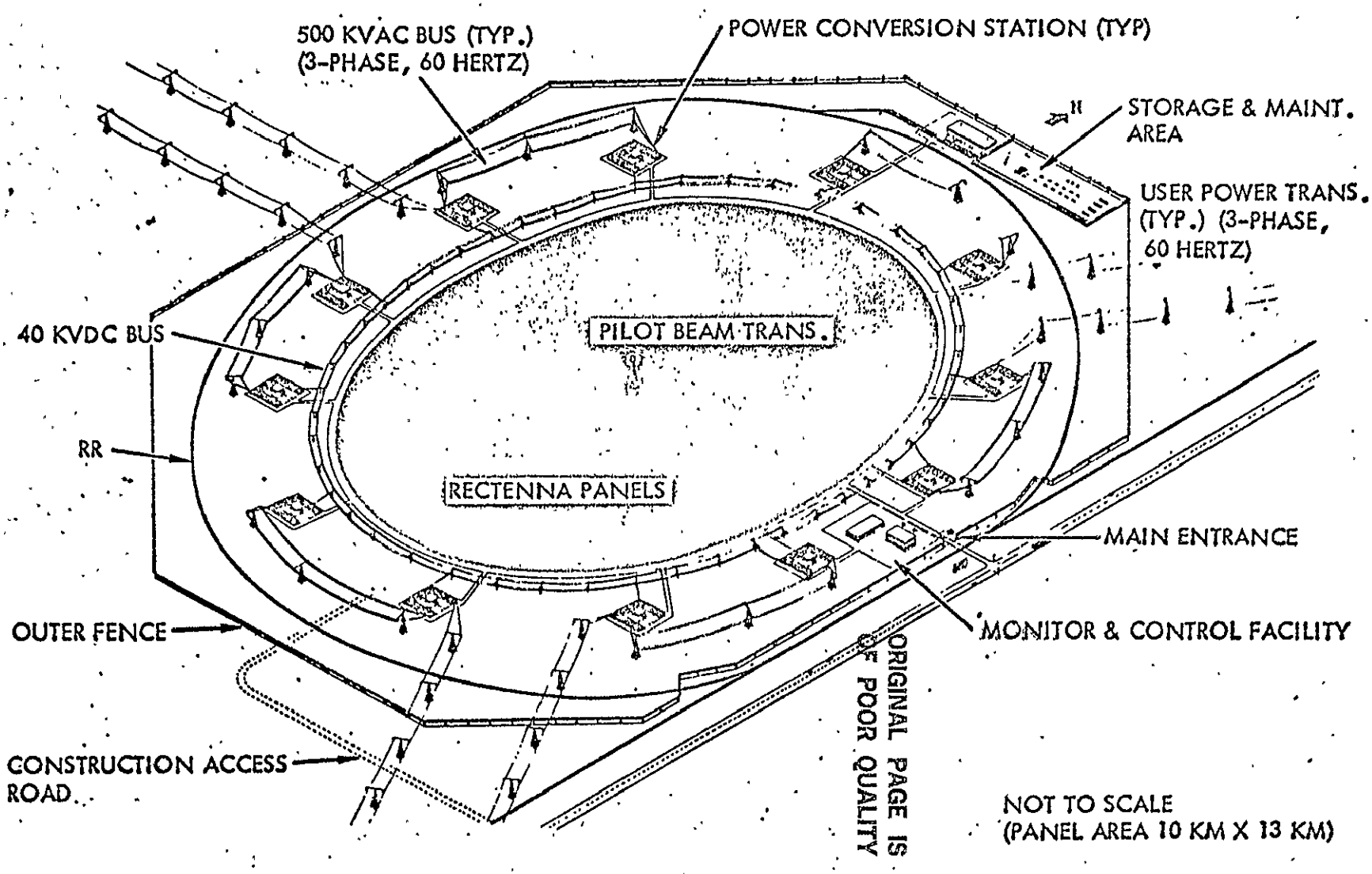

ORIGINAL PAGE IS OF POOR QUALITY

RECTENNA CONSTRUCTION SEQUENCE

There are nine major activities involved in rectenna site construction. In this chart, starting from left to right, the site must be surveyed, utilities and other supporting facilities installed, reference coordinates laid out, and the site cleared and leveled. Following this, more precise grading of the actual panel rows is conducted, footing trenches excavated, concrete poured, and the panels installed. The 40 kV dc and 500 kV ac periphery buses must then be installed, separated by the connecting converter stations.

RECTENNA CONSTRUCTION SEQUENCE

SITE SURVEY ENGINEERING

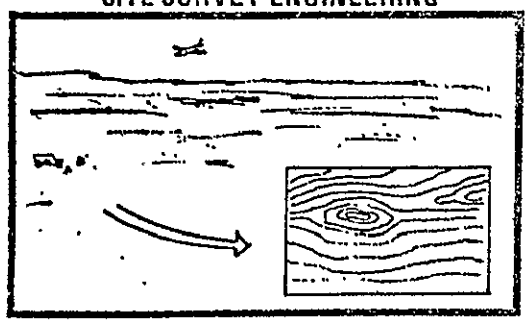

SUPPORT FACILITIES INSTALLATION

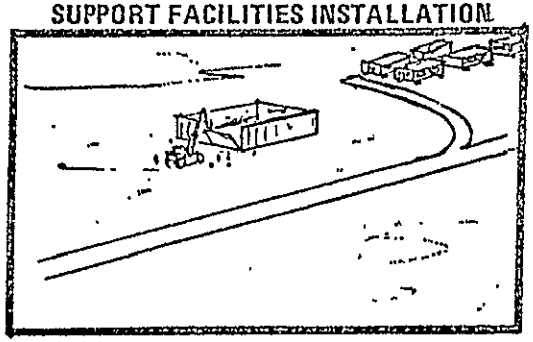

REFERENCE COORDINATES

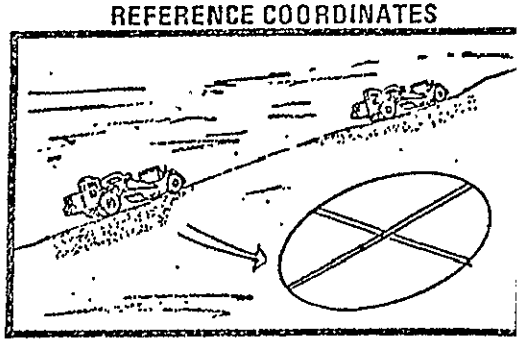

SITE CLEARING

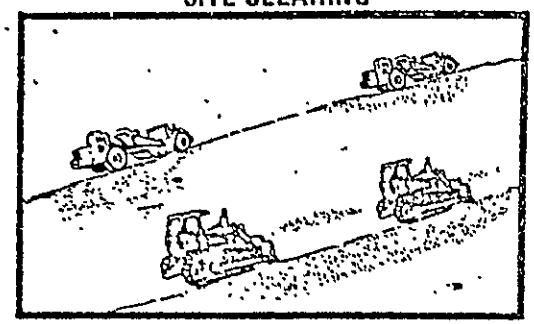

PANEL PAD GRADING

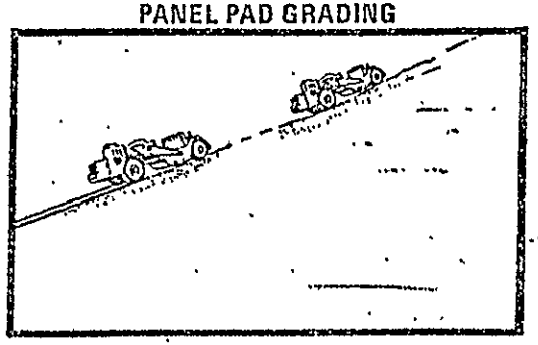

PANEL INSTALLATION OPERATIONS

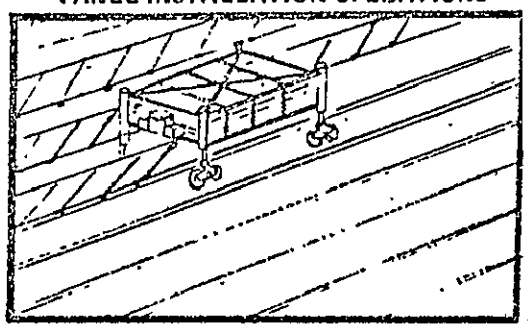

40 KVDC BUS INSTALLATION

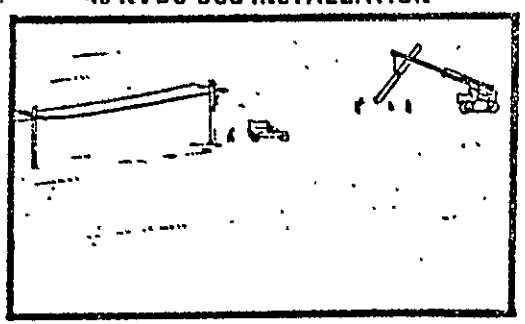

CONVERTER STATION INSTALLATION

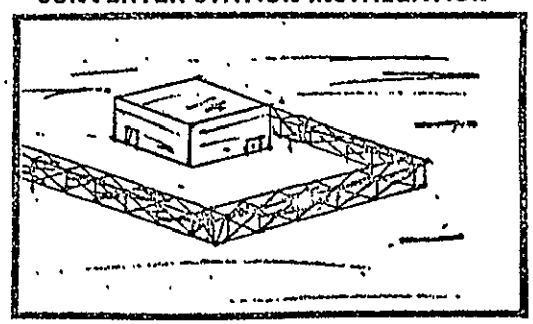

500 KVAC BUS INSTALLATION

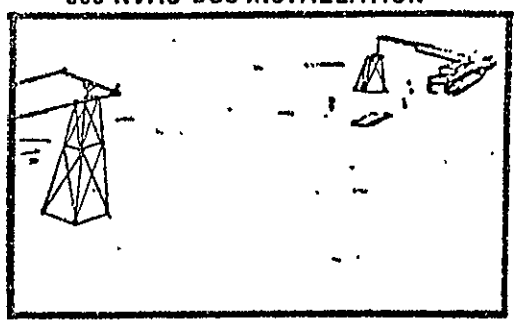

ORIGINAL PAGE IS
OF POOR QUALITY

PANEL INSTALLATION

The panels are secured to two continuous concrete footings. A trade-off which considered eight individual footings versus continuous footings was made. A maximum wind force of 90 m/hr was assumed. It was determined that the amount of concrete required for either approach was essentially the same, but that the continuous footing concept was easier to install.

Each panel is secured to the footings at eight locations by fixtures which are imbedded in the concrete during the pouring operation. Mounting attachments which provide for longitudinal and lateral adjustment are secured to the fittings. Screw jacks on each of the rear attach points provide for panel adjustment and alignment.

The panel switch gears and feeder lines are mounted above ground behind each panel as shown, although it is recognized that either above or below ground runs for the feeders is feasible.

PANEL INSTALLATION

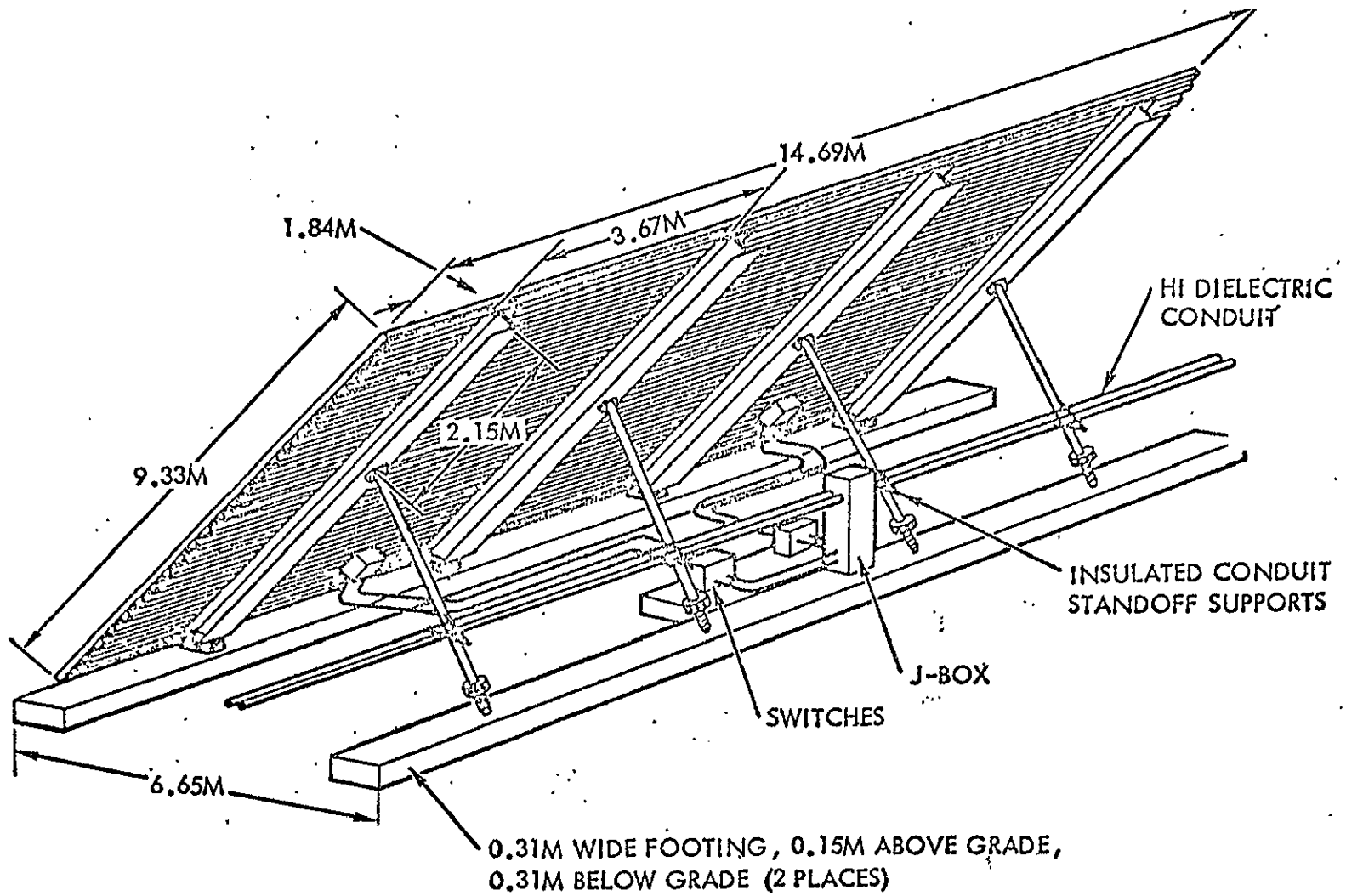

RECTENNA SITE CONSTRUCTION SCHEDULE

The construction schedule is predicted on an overall time span of completion of approximately 15 months. This schedule assumes that the site selection already has been made and that the procedures incident to land acquisition have been completed. The overall approach, after installation of utilities and support facilities, entails clearing and grading in sections, followed by footing excavation, concrete pouring, and panel installation. Manpower and equipment estimates, summarized in subsequent charts, are based on this schedule.

ORIGINAL PAGE IS OF POOR QUALITY

RECTENNA SITE CONSTRUCTION SCHEDULE

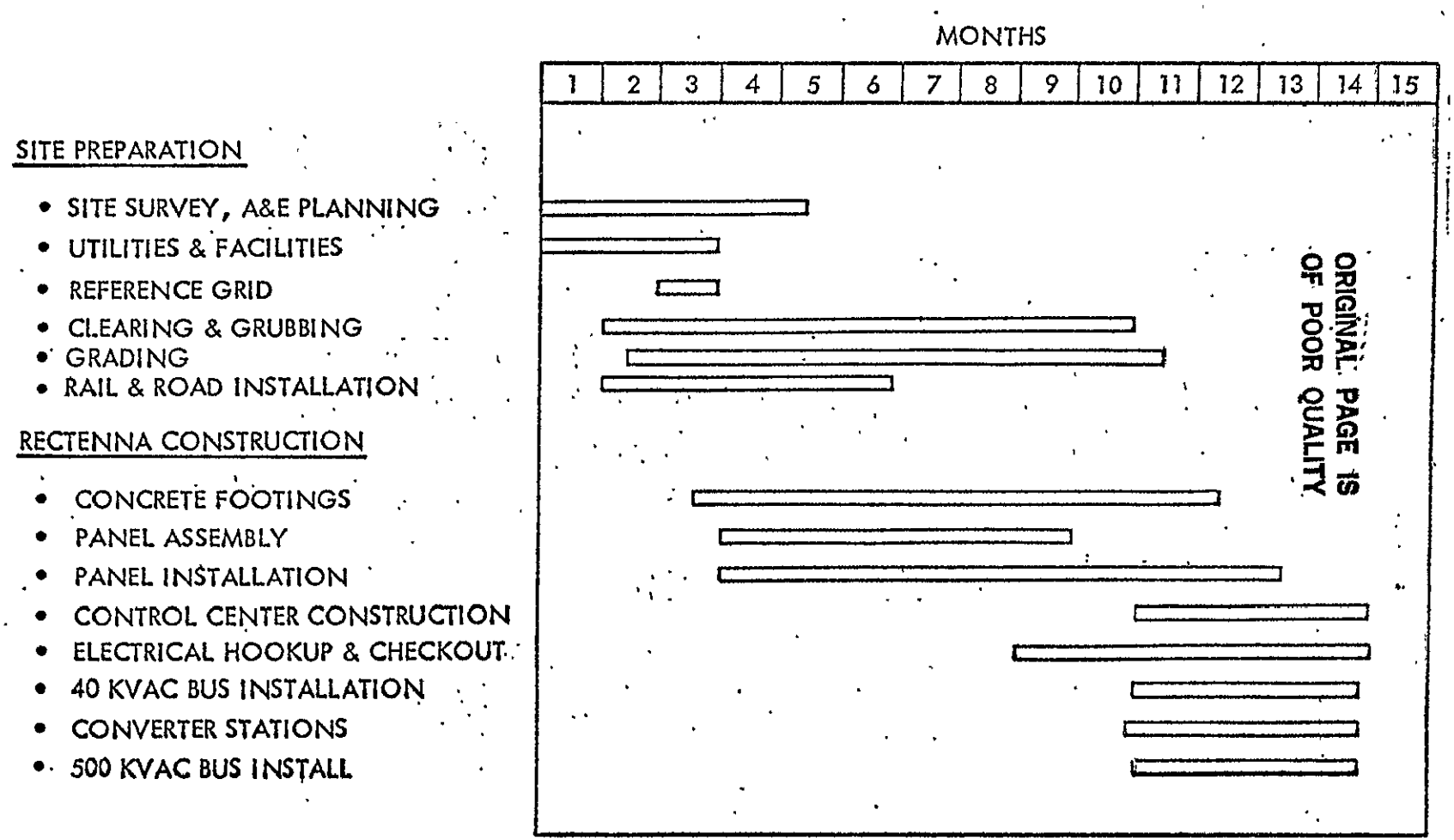

ORIGINAL PAGE IS
OF POOR QUALITY

CONSTRUCTION SUMMARY

Rectenna mass, crew requirements, and equipment needs are summarized. Approximately 85% of the total 1207×10^6 kg attributed to panels is steel. The concrete requirements, approximating the volume of Hoover Dam, are predicted on a 90 mph wind. Additional analysis may result in a lowering of this requirement.

Of the equipment; electrical installation trucks (panel trucks) and concrete trucks comprise the greatest numerical requirement. All equipment, with the exception of installers and trucks used to deliver and install panels, is of current design and in service.

CONSTRUCTION SUMMARY

- SCHEDULE: 15 MONTHS

RECTENNA MASS -	PANELS	1207×10^6 kg
	CONCRETE	7176
	FEEDERS	1
	REINFORCE STEEL	51
		8435×10^6 kg

- CREW

SHIFT SIZE	2474
TOTAL CREW FOR 24 HR/7DAY OPERATION	9272

- EQUIPMENT

SCRAPERS/GRADERS	67
DUMP TRUCKS	50
BULLDOZERS	50
CRANES	34
BACK HOES	17
TRACTOR/TRAILER TRUCKS	48
CONCRETE TRUCKS	190
CONCRETE POURING RIGS	10
PANEL INSTALLERS	40
PANEL MAGAZINE TRUCKS	14
ELECTRICAL INSTALLATION TRUCKS	229
MISC. JEEPS, PICKUPS, ETC.	-

ORIGINAL PAGE IS
OF POOR QUALITY

SPS SPACE TRANSPORTATION SCENARIO

The current reference concept uses a two-stage LO_2/LH_2-propelled approach. The first stage provides part of the ascent ΔV and returns to LEO. The second stage provides the remainder of the ascent ΔV to carry the crew and cargo to GEO. It also provides the ΔV to return the crew to LEO.

The alternate scenario illustrated on this chart uses a single stage to transport crew between LEO and GEO. The stage is filled with LO_2/LH_2 propellant at LEO which is used to carry the crew to GEO. At GEO, the stage is refueled for a return of the crew to LEO. Propellants are carried to GEO from LEO by the EOTV. The SPS HLLV carries the construction, crew expendables, and POTV propellants to LEO. The shuttle orbiter carries the crew and crew module to LEO.

Although significant propellant savings occur using this mode compared to the reference concept, the total mass saved is small compared to the construction mass. The major impact is in the much smaller stage size realized using this approach.

SPS SPACE TRANSPORTATION SCENARIO

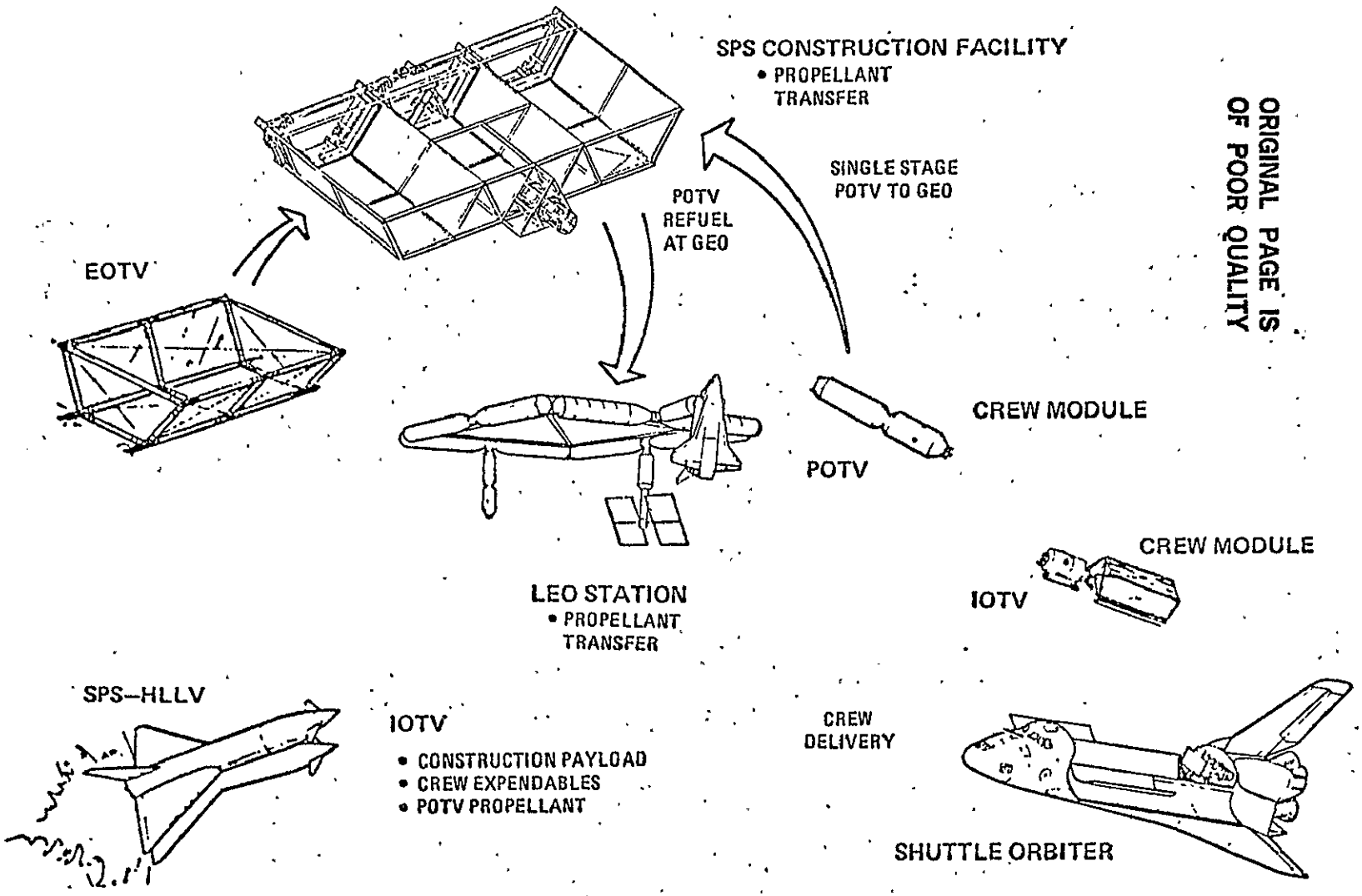

ORIGINAL PAGE IS OF POOR QUALITY

TWO-STAGE, PARALLEL BURN HLLV CONCEPT

Mass properties data and key concept features of the updated HLLV configuration are identified.

TWO-STAGE, PARALLEL BURN HLLV CONCEPT

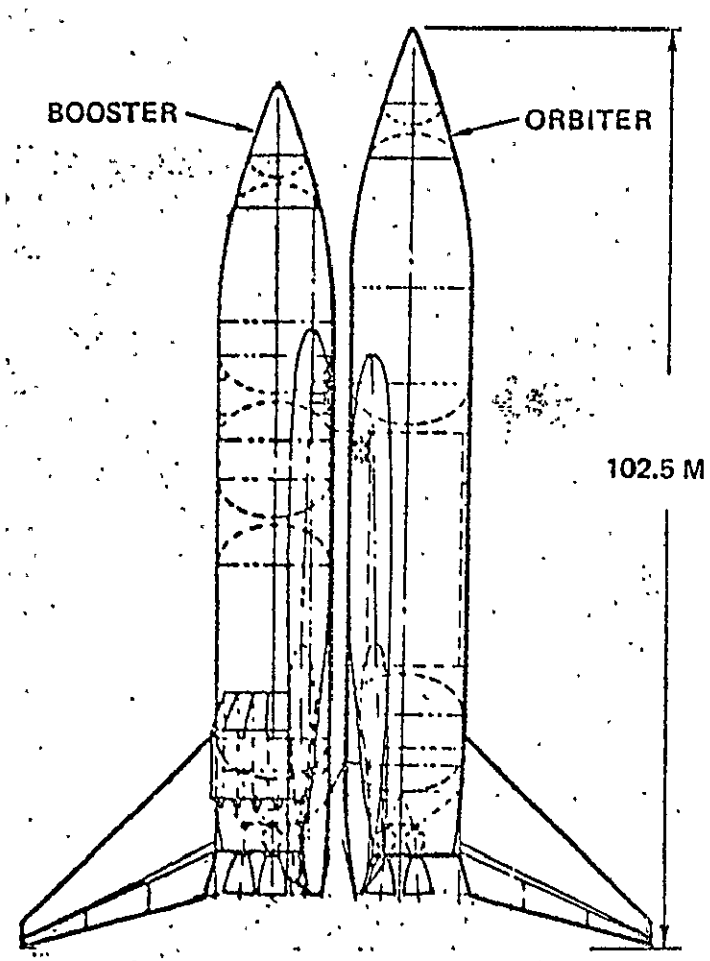

MASS PROPERTIES		
	10^6 KG	10^6 LB
GLOW	7.135	15.73
BLOW	4.831	10.65
WP_1	4.359	9.61
U LOW	2.177	4.80
WP_2	1.579	3.48
PAYLOAD	0.231	0.510

ORIGINAL PAGE IS OF POOR QUALITY

CONCEPT FEATURES

- LOX/RP C.G. CYCLE 1ST STAGE
- LOX/LH_2 (STAGED COMBUSTION) 2ND STAGE
- PROPELLANT CROSSFEED—PARALLEL BURN
- STAGING VELOCITY, 2127 M/S (6978 F/S)
- STAGING ALTITUDE, 55 KM (181,000 FT)

SINGLE-STAGE TO ORBIT HLLV CONCEPT (STAR-RAKER)

A horizontal take-off and landing single stage to orbit concept also is being considered as an alternative to the vertical take-off HLLV's. This concept, shown in this figure, uses air-breathing engines for take-off, cruise, and acceleration up to 6,200 ft/s and rocket engines for parallel burn with the air-breather between 6,200 ft/s and 7,200 ft/s and for final injection to orbit. This concept carries 91,000 kg of payload to orbit. Take-off and landing can be accomplished with standard airport runway lengths.

SINGLE-STAGE TO ORBIT HLLV CONCEPT (STAR-RAKER)

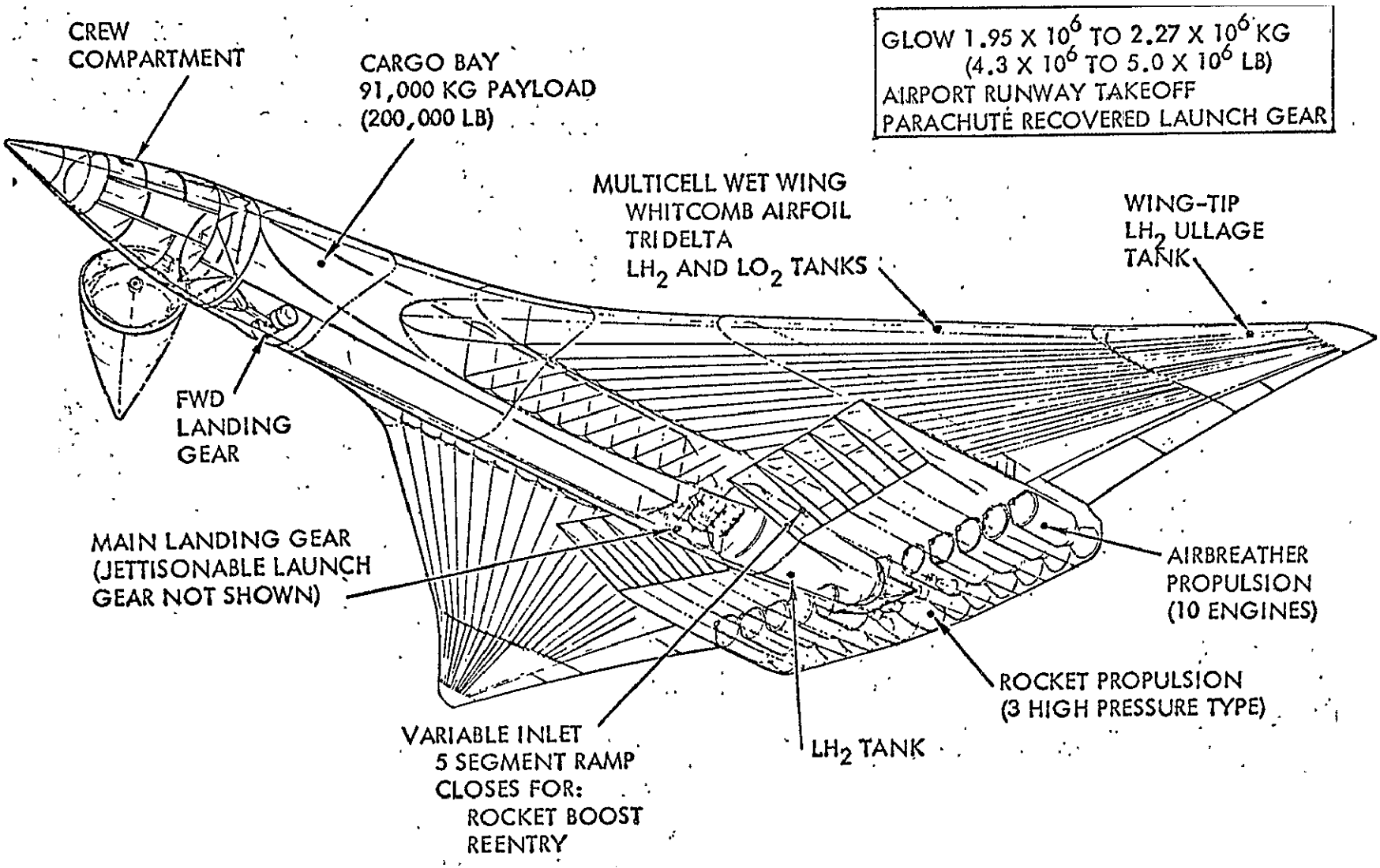

ORIGINAL PAGE IS
OF POOR QUALITY

EOTV CONFIGURATION

Pertinent characteristics of the updated EOTV configuration are illustrated. The vehicle has a down payload capability (GEO-to-LEO) of 526,000 kg.

EOTV CONFIGURATION

EOTV DRY WT. - 10^6 KG
EOTV WET WT. - 1.67×10^6 KG
PAYLOAD WT. - 5.26×10^6 KG

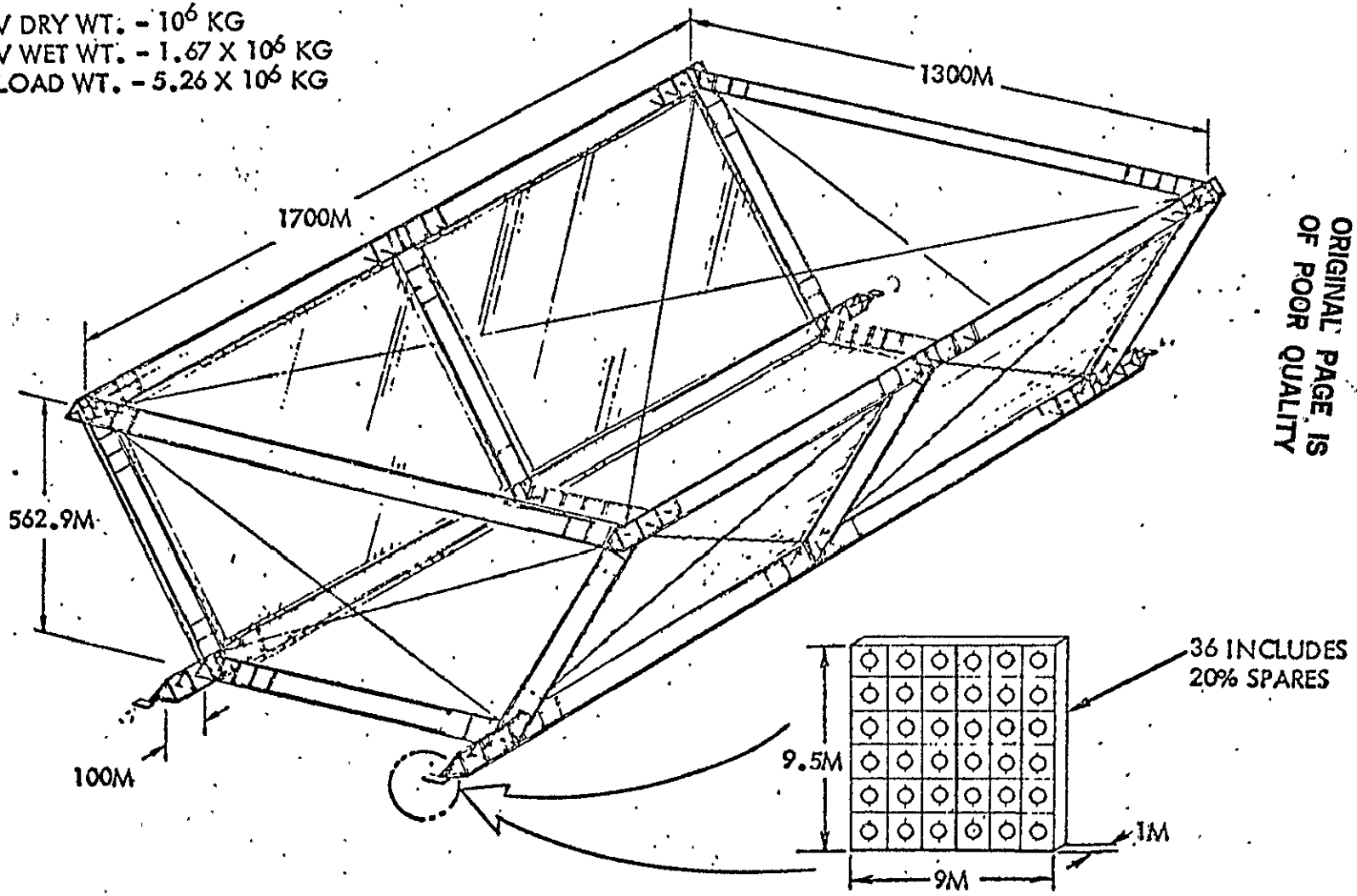

ORIGINAL PAGE IS
OF POOR QUALITY

POTV CONFIGURATION

The reference POTV configuration selected is illustrated and significant parameters identified.

A potential alternate would be an integrated 30 man crew module and OTV capable of being carried in the growth STS payload bay.

POTV CONFIGURATION

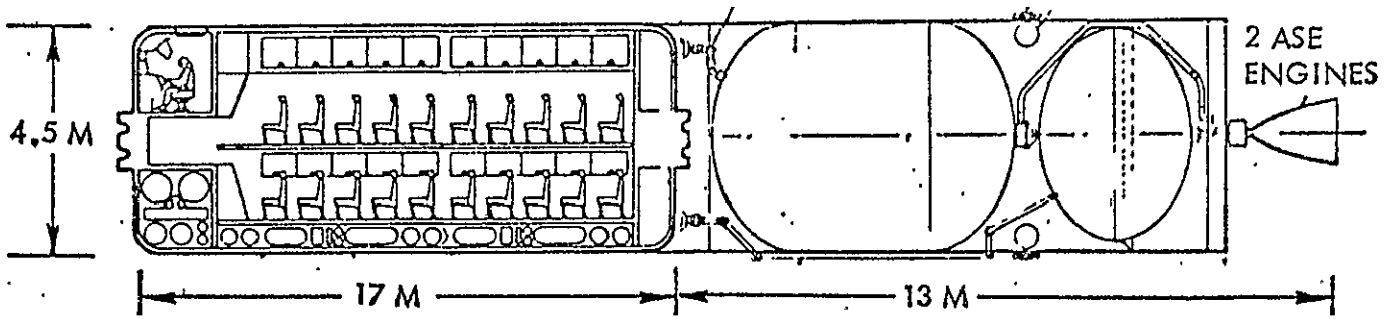

• 60 MAN CREW MODULE	18,000 KG
• SINGLE STAGE OTV (GEO REFUELING)	36,000 KG
• BOTH ELEMENTS CAPABLE OF GROWTH STS LAUNCH	

ORIGINAL PAGE IS OF POOR QUALITY

SPS EVOLUTIONARY DEVELOPMENT PLAN ELEMENTS

A major portion of this contract was devoted to development of a technology plan. The principal elements of the SPS development plan are summarized in this figure. Four major elements comprise this plan:

- Microwave Ground-Based Exploratory Research Program
- Key Technology Program (other than microwave)
- SPS Orbital Test Platform Demonstration Program
- Pilot Plant Demonstration Phase

The microwave ground-based exploratory research program provides the seed-bed for prototype development of microwave transmission systems. This program will result in key microwave environmental data for evaluation of the microwave transmission system. The key technology program will develop the needed technology in all other SPS technology areas. The orbital test program will result in an end-to-end technology verification of the SPS under operational environmental conditions at geosynchronous orbit. The pilot-plant phase will result in an end-to-end system demonstration of SPS.

SPS EVOLUTIONARY DEVELOPMENT PLAN ELEMENTS

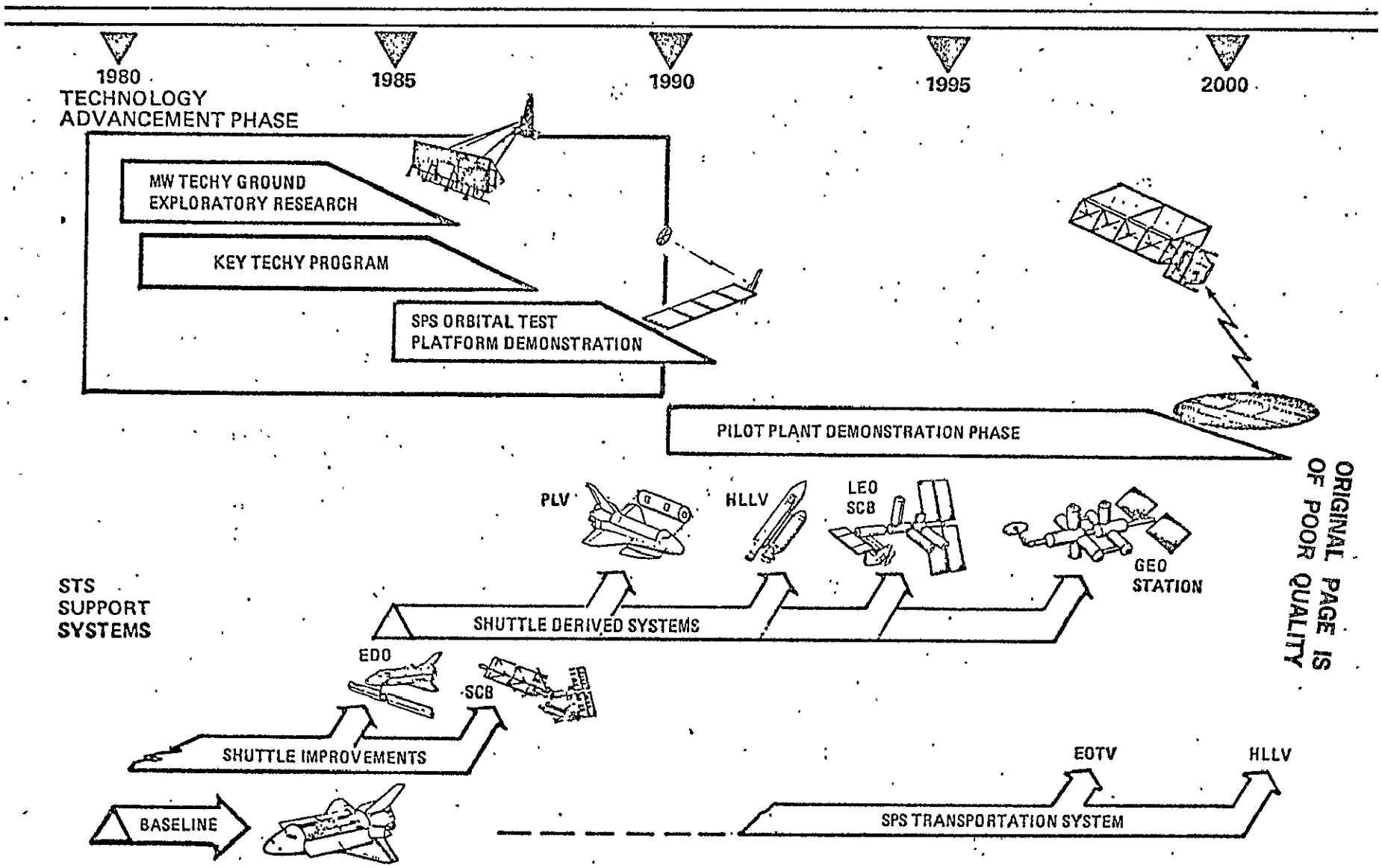

ORIGINAL PAGE IS OF POOR QUALITY

TECHNOLOGY PLANNING

This chart is self-explanatory.

DETAILED PLANS FOR NEAR-TERM TECHNOLOGY DEVELOPMENT

GaAs SOLAR CELL

PROPOSAL FOR 2-YEAR PROTOTYPE CELL DEVELOPMENT

MICROWAVE TRANSMISSION SYSTEM

- EARLY DEVELOPMENT OF SOLID-STATE POWER AMPLIFIERS

POWER DISTRIBUTION

PLAN FOR DC/DC CONVERTERS AND SWITCH GEAR ADEQUATE TO SUPPORT 1985-1990 ORBITAL TEST PLATFORM DEMONSTRATION

ORIGINAL PAGE IS OF POOR QUALITY

SPS MULTI-TEST PLATFORM EVOLUTION

This chart summarizes the possible evolution of the SPS multi-test platform. Two developmental paths reflect (1) a high-legacy large orbital test system and (2) an alternative low-cost geosat system for early environmental and inverted test range evaluations. Both silicon and GaAs solar array options could be available to space system developments.

SPS MULTI-TEST PLATFORM EVOLUTION

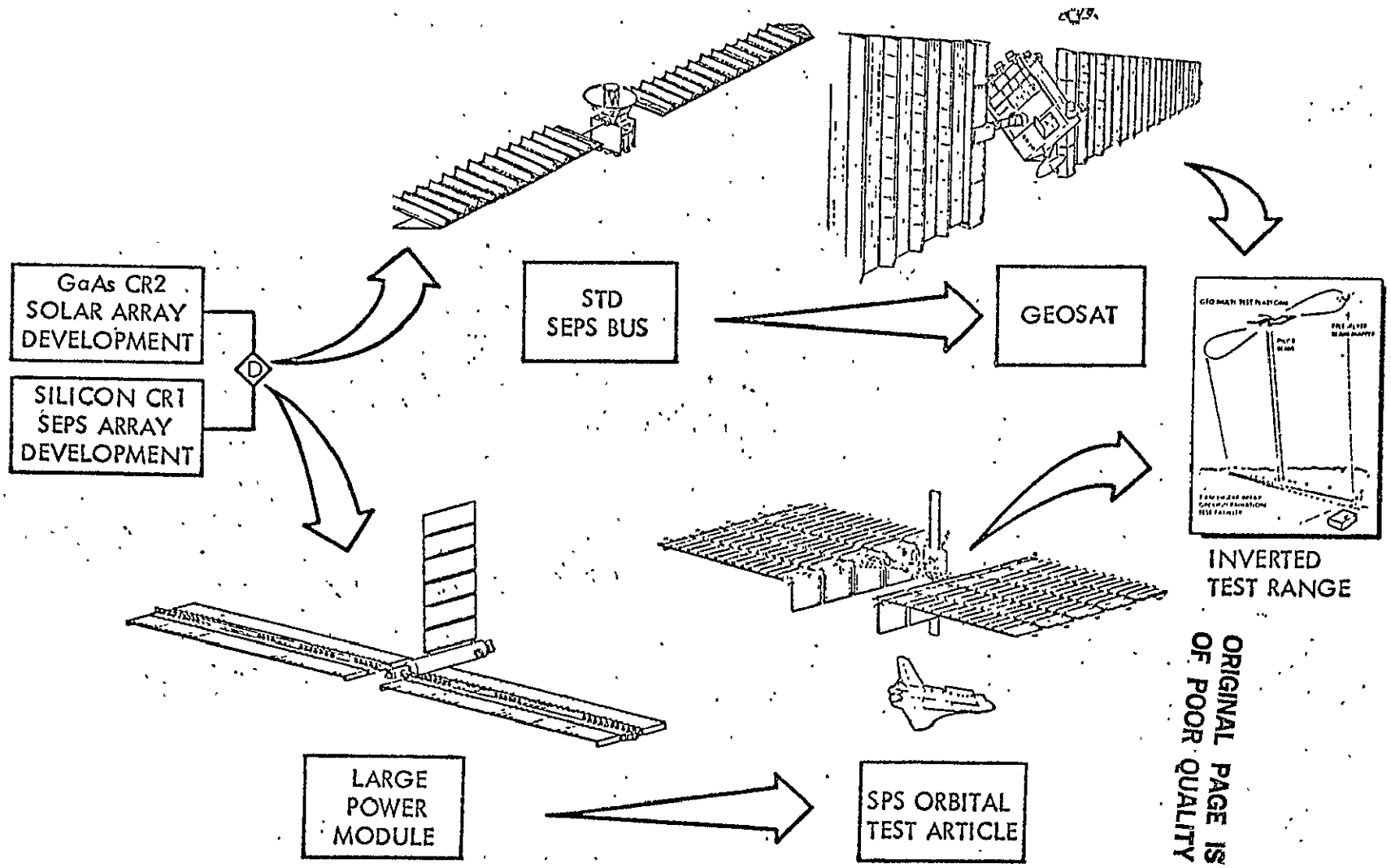

ORIGINAL PAGE IS
OF POOR QUALITY

SPS PILOT PLANT IN FINAL PHASES OF CONSTRUCTION

Completion of the SPS Technology Advancement phase by 1990 will provide the technical confidence to proceed with the full-scale pilot-plant demonstration phase. The primary objective of this development phase is to demonstrate commercial viability of the SPS system to those utility firms and consortiums that would ultimately capitalize and operate the production system.

The pilot-plant satellite would be constructed in LEO using a Shuttle-derived HLLV for mass transfer and construction support systems. The satellite is transferred to geosynchronous orbit by an electric-propulsion system. The system operates in the same mode as the full-scale satellite by directing a microwave power beam at a total power level of several hundred megawatts to a standard modular segment of the proposed operational ground rectenna. The demonstration/operational period would range from six months to a few years, during which time the SPS elements of the full-scale solar power satellite would be operated in the operational environment. Operational data would provide the quantitative basis for analyses which would support full SPS commercial capability.

The initial step is establishment of a LEO base, previously described, that is capable of constructing a single trough of the satellite. The pilot-plant demonstrator, shown near completion in this figure, is sized to the projected EOTV power level of 335 MW at the array. Allowing for radiation degradation and power distribution losses, power to the microwave antenna would be approximately 285 MW. Microwave transmission losses would reduce this value to about 230 MW at the rectenna. This would result in recovery of 8 MW of power for a 7-km-diameter rectenna or 2 MW of power for a 1.75-km-rectenna.

SPS PILOT PLANT IN FINAL PHASES OF CONSTRUCTION

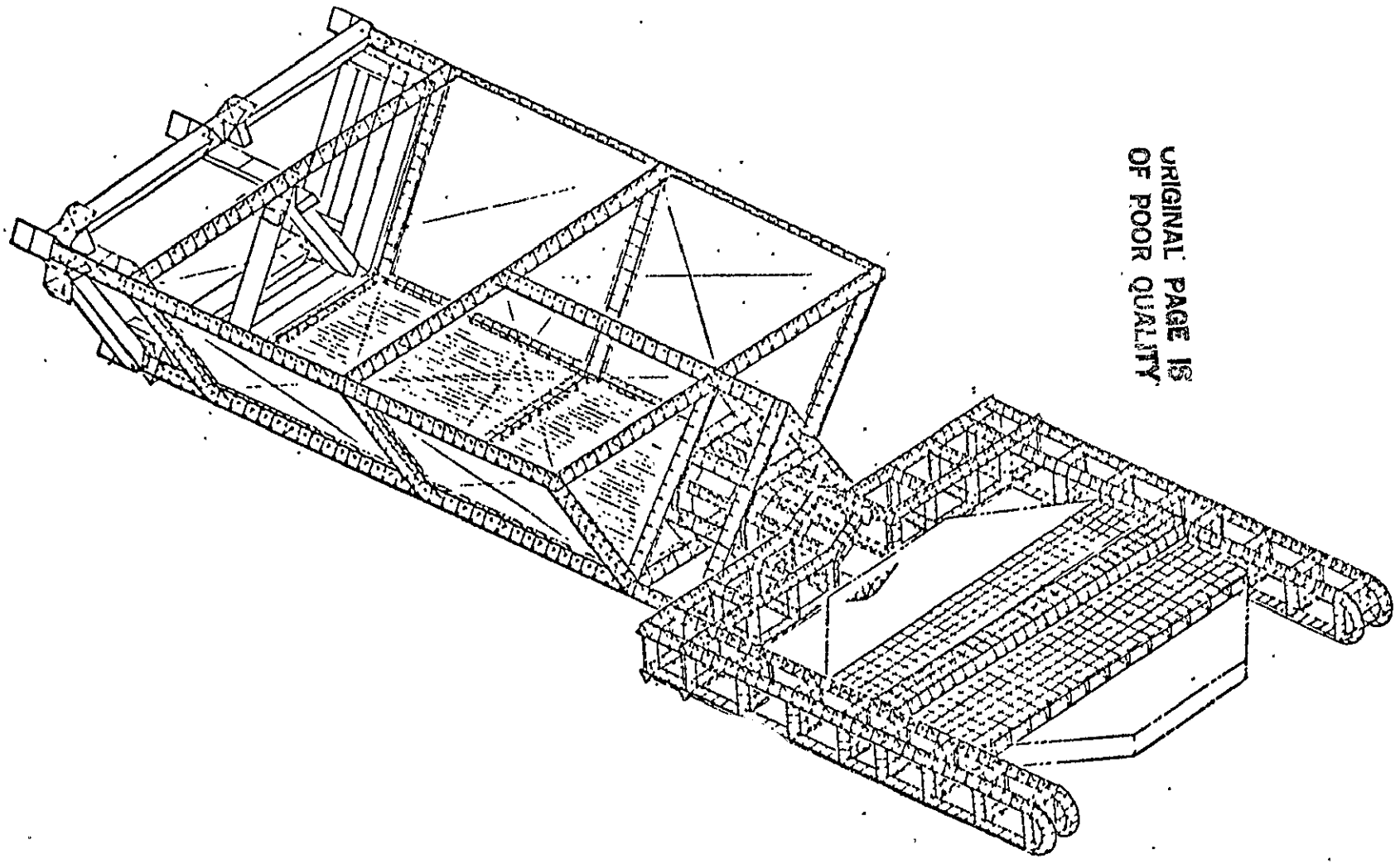

ORIGINAL PAGE IS
OF POOR QUALITY

MAJOR OBSERVATIONS

This chart is self-explanatory.

MAJOR OBSERVATIONS

- CURRENT REFERENCE CONCEPT COULD BE MODIFIED BASED ON CURRENT STUDY RESULTS
  - FURTHER DETAILING OF THIS CONCEPT IS NOT BENEFICIAL
- POTENTIALLY ATTRACTIVE SOLID STATE CONCEPTS HAVE EMERGED
  - NEED TRADE STUDIES AND DETAILED DEFINITION
- OVERALL SATELLITE CONSTRUCTION CONCEPTS PROVIDE PRELIMINARY FEASIBILITY
  - UPDATES REQUIRED FOR SIGNIFICANTLY DIFFERENT CONCEPTS
- GROUND RECEIVING STATION DEFINITION ADEQUATE EXCEPT FOR LIGHTNING PROTECTION
- EOTV AND POTV DEFINITION ADEQUATE
  - HLLV NEEDS FURTHER DEFINITION
- NEAR-TERM TECHNOLOGY DEVELOPMENT DEFINED
  - ACCEPTANCE AND IMPLEMENTATION NEEDED
- SPS COSTS SENSITIVE TO COST GOALS FOR SOLAR CELLS AND DC/RF DEVICES
  - NEED BETTER DEFINITION OF MANUFACTURING COST AND CONCEPT APPROACHES TO REDUCE SENSITIVITY

ORIGINAL PAGE IS OF POOR QUALITY

EXECUTIVE SUMMARY

G. M. HANLEY

DESIGN DEFINITION

- REFERENCE CONCEPT - A. A. NUSSBERGER
- SOLID-STATE CONCEPTS - W. V. McRAE
- MICROWAVE TRANSMISSION SYSTEM - C. Y. TOMITA
- LASER ENVIRONMENTAL STUDY - G. M. HANLEY

CONSTRUCTION & OPERATIONS

- R. F. WADSWORTH

TRANSPORTATION SYSTEM DEFIN.

- R. P. BERGERON

PROGRAM AND COST DATA

- F. W. VON FLUE

ORIGINAL PAGE IS OF POOR QUALITY

PRECEDING PAGE BLANK NOT FILMED

REFERENCE CONCEPT BRIEFING OUTLINE

The briefing outline for describing the Rockwell SPS Satellite System Concept definition is given.

REFERENCE CONCEPT BRIEFING OUTLINE

- SPS SATELLITE CONFIGURATION ISSUES
  - SOLAR CELL SELECTION
  - SATELLITE SHAPE
    - REFLECTOR SLANT ANGLE
    - COPLANAR CONFIGURATION
    - ANTENNA STRUCTURAL DESIGN
    - KLYSTRON INSTALLATION
  - STRUCTURAL ANALYSIS
  - SYSTEM SIZING
    - SEASONAL VARIATIONS IN POWER
    - SPECULAR REFLECTANCE
    - ENVIRONMENTAL DEGRADATION OF POWER
    - EFFICIENCY CHAIN
- SATELLITE CONFIGURATION DEFINITION
- POWER DISTRIBUTION TECHNOLOGY ISSUES
- RECTENNA CONCEPT
- SPS SATELLITE SYSTEM CHARACTERISTICS

PROJECTED SOLAR CELL COST COMPARISON

Solar cell comparisons were made to show major satellite considerations between silicon and gallium arsenide. Amorphous silicon (A-Si) was included in the comparison to represent a relatively low cost solar cell material at lower conversion efficiency. Present status on the A-Si is about 5.5% efficiency with a theoretical efficiency of about 15%. A cost analysis based on materials cost, cell manufacturing process costs, and blanket manufacturing process costs was performed for the three solar cell configurations. Terrestrial silicon cost model is shown to meet the DOE 1986 technology goal of $0.50/Wp. Note that the SPS solar cell cost allocation is based on 1990 technology cutoff and for this technology date the DOE terrestrial goals are $0.10 to $0.30/Wp. For reference comparison, total solar cell cost($/m^2) estimates for GaAs and Si SPS solar arrays made by Arthur D. Little Co. Inc. are shown.

PROJECTED SOLAR CELL COST COMPARISON

COST MODEL

SOLAR CELL CONFIGURATION	CELL/BLANKET MAT'L S/m^2	CELL PROCESS S/m^2	BLANKET PROCESS S/m^2	TOTAL S/m^2	*ADL REFERENCE (COMPARISON) TOTAL S/m^2
$GaAs/Al_2O_3$	36.815	17.00	17.00	70.815	67.0
SILICON	13.251	17.00	17.00	47.251	53.0
A-SILICON	3.096	17.00	17.00	37.096	—
TERRESTRIAL[1] SILICON	21.4	22.0	23.5	66.9	

MATERIAL COSTS:
GALLIUM - $500/KG
As - 150/KG
SAPPHIRE - 325/KG
SILICON - 60/KG
OTHERS - 20/KG

*REFERENCE: "EVAL OF SOLAR CELLS & ARRAYS FOR POTENTIAL SOLAR POWER SATELLITE APPLICATIONS"
ARTHUR D. LITTLE INC. NASA9-15294, MARCH 31, 1978

(1) JPL—LOW-COST SILICON SOLAR ARRAY PROJECT

PRICE ALLOCATION GUIDELINE
NON-INGOT 1986 TECHNOLOGY
$0.50/$W_P$

NOTE: 1990 TECHNOLOGY GOAL
$0.10 TO $0.30/$W_P$

ORIGINAL PAGE IS OF POOR QUALITY

SOLAR CELL TRADE RESULTS

The relative performance, effect on mass, and cost are shown for the three solar cell configurations. Environmental degradation factors of 0.96 and 0.85 were selected for the comparison. The greatest mass penalty is with the single crystal silicon due primarily to its heavier cross section. The mass penalty shown for A-Si is due to its lower efficiency (10 to 14%). The GaAs (CR=1) configuration is used as a reference for comparison.

The major impacts on cost are solar cell, transportation and structure cost deltas. Single crystal silicon costs look competitive to GaAs CR=1 for the case where radiation degradation factor of 0.96 was taken. A-Si begins to look cost attractive at the higher efficiency of 14%.

Mass factors used in the analysis are shown at the bottom of the chart.

SOLAR CELL TRADE RESULTS

PARAMETER	GaAs		Si		A-Si *	
CONCENTRATION RATIO	2	1	1	1	1	1
EFFICIENCY (AMO, 28 C)	20%	20%	17.3%	17.3%	10%	14%
ENVIR. DEGRAD. FACTOR	0.96	0.96	0.96	0.85	0.85	0.85
SPECIFIC PWR OUTPUT (W/m^2)	340.9	205	170	150	86.6	121
SOLAR CELL AREA FACTOR	0.602	1.0 ($49.96 \times 10^6\ m^2$)	1.21	1.367	2.37	1.693
MASS FACTOR	0.705	1.0 (19.215×10^6 kg)	1.75	1.971	1.719	1.239
COST FACTOR	0.622	1.0 (4.731B)	0.972	1.11	1.40	1.045

MASS FACTORS

GaAs = 0.252 kg/m^2
Si = 0.426 kg/m^2
A-Si = 0.143 kg/m^2
ΔStructure = 0.087 kg/m^2 (S.A.)

PDC = $(A_1/A_2)^2$ MAIN FEEDERS
= (A_1/A_2) REMAINDER

Reflectors = 0.018 kg/m^2

*A-Si—Amorphous Silicon

ORIGINAL PAGE IS OF POOR QUALITY

SOLAR ARRAY COST COMPARISONS

This chart shows the parametric cost comparison with A-Si cost as a parameter. In this comparison, the A-Si cell process cost was reduced from \$17.0 m^2 to reduce the total A-Si solar cell cost down to \$20.0/m^2. The chart shows A-Si varying in efficiency from 10% to 14% compared to fixed efficiencies for single crystal silicon and gallium arsenide. As shown, the A-Silicon must achieve both low cost (~\$20/m^2) and high efficiency (14%) to approach the GaAs CR=2 costs.

Material cost factors used in the analysis are shown in the chart.

SOLAR ARRAY COST COMPARISONS

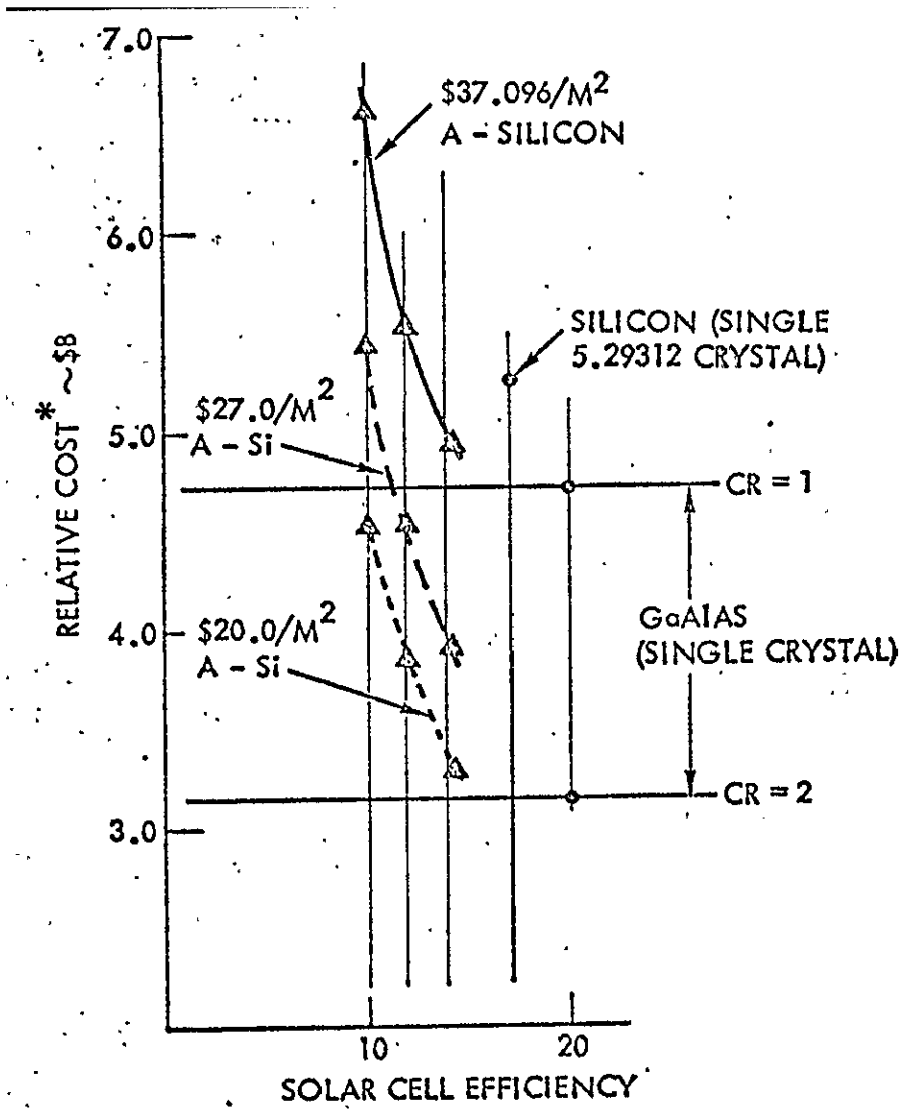

MATERIAL COST FACTORS ($/KG)

Ga	=	500
As	=	150
Al_2O_3	=	325
Si	=	60
Al. Kapton	=	143 (reflectors)
Structure	=	80.66
Conductors	=	1.52
Switch gear	=	65
Others	=	20
Transportation	=	$37.5 (to GEO)

ORIGINAL PAGE IS OF POOR QUALITY

PRELIMINARY TRADE RESULTS

The preliminary trade results show that GaAs Solar cells remain the preferred cell material (compared to silicon). This is based on its higher efficiency (20% vs 17.3%); lower space radiation degradation (16% vs 30%); greater potential for self-annealing out of radiation damage (125°C threshold temperature vs >500°C); lower specific weight (0.252 kg/m^2 vs 0.427 kg/m^2); its compatibility with concentrators; improved temperature coefficient; smaller cell area, potential for cell efficiency improvement (the multiple band gap concept is essentially a gallium arsenide cell with potential of 25-30% cell efficiency) and lower overall SPS cost.

Silicon offers advantages in that silicon material is easily available; however, scale up is required to obtain the necessary quantity of semi-grade silicon (e.g., 11850 metric tons per 5 GW). A more mature silicon technology exists. Gallium arsenide solar cell development will require a new industry in reclaiming gallium from bauxite and in producing the required solar cells $\sim 30 \times 10^6$ m^2 per 5 GW.

The remainder of results are self-explanatory.

PRELIMINARY TRADE RESULTS

- GaAs SOLAR CELL REMAINS "BEST" CELL MATERIAL (COMPARED TO SILICON)
  - HIGHER CONVERSION EFFICIENCY (20% VS 17.3%)
  - LESS SPACE RADIATION DEGRADATION (.84 VS .70)
  - GREATER POTENTIAL FOR SELF ANNEALING OF RADIATION DAMAGE ($125^{0}C$ VS $500^{0}C$)
  - LOWER SPECIFIC WEIGHT (0.252 KG/M^2 VS 0.427 KG/M^2)
  - COMPATIBLE WITH CONCENTRATION (CR=2 VS CR=1)
  - IMPROVED TEMPERATURE COEFFICIENT ($-0.0017V/^{0}C$ VS $-0.00215V/^{0}C$)
  - SMALLER SOLAR CELL AREA (28.4×10^{0} M^2 VS 56.3×10^{6} M^2)
  - POTENTIAL FOR CELL EFFICIENCY IMPROVEMENT (MULTIPLE BANDGAP 25-30%)
  - LOWER SPS OVERALL COST (3130.2$\overline{M}$ VS 5257$\overline{M}$ NORMALIZED)
- SILICON OFFERS SOME ADVANTAGES
  - BETTER MAT'L AVAILABILITY ASSURANCE [67000 MT OF SILICON REQUIRED TO PRODUCE 11850 MT SEMI CONDUCTOR GRADE SILICON (SeG-Si)]
    NOTE: APPROX. 9,750,000 MT BAUXITE REQUIRED TO PRODUCE 390 MT GALLIUM FOR 1 SPS
  - MORE MATURE SOLAR CELL INDUSTRY (GALLIUM ARSENIDE SOLAR CELLS REQUIRE NEW INDUSTRY)

ORIGINAL PAGE IS OF POOR QUALITY

C-2

REFLECTOR SHAPE

The geometry and ray traces for the Vee-trough design for a 60° and 71° reflector slant angle are shown. As illustrated, for a CR=2 the slant angle is 60°, and for a CR=2.576 the reflector slant angle is 71°. Performance, weight, and cost comparisons were made for the satellite configurations with reflector angles of 60°, 65° and 71°. Weight items affected included array structure, solar cells, reflectors, and electrical conductors. The net weight variation is minor.

SPS subsystem costs were compared including transportation differences. As the reflector angles increase, even with the savings of cost/mass shown, it is insufficient to overcome the penalty from the added structure complexity. The recommendation resulting from this comparison is that the earlier baseline, utilizing CR=2 and 60° slant angle, should be retained.

REFLECTOR SHAPE

Parameter	REFLECTOR ANGLE 60°	65°	71°
CR_{GEOM} CR_{EFF} (EOL)	2.0 1.83	2.286 2.067	2.576 2.308
Solar cell area (10^6 m^2)	1.0 (30.06)	0.898	0.818
Reflector surface (10^6 m^2)	1.0 (60.12)	1.366	1.981
Satellite length (km) Cross-section beam length (km) Blanket width (m)	20.09 11.1 600	19.35 11.92 550	19.11 13.3 500
Mass (10^6 kg)	1.0 (13.619)	0.977	0.9982
Cost ($M)	1.0 (3201.99)	0.9497	0.9352

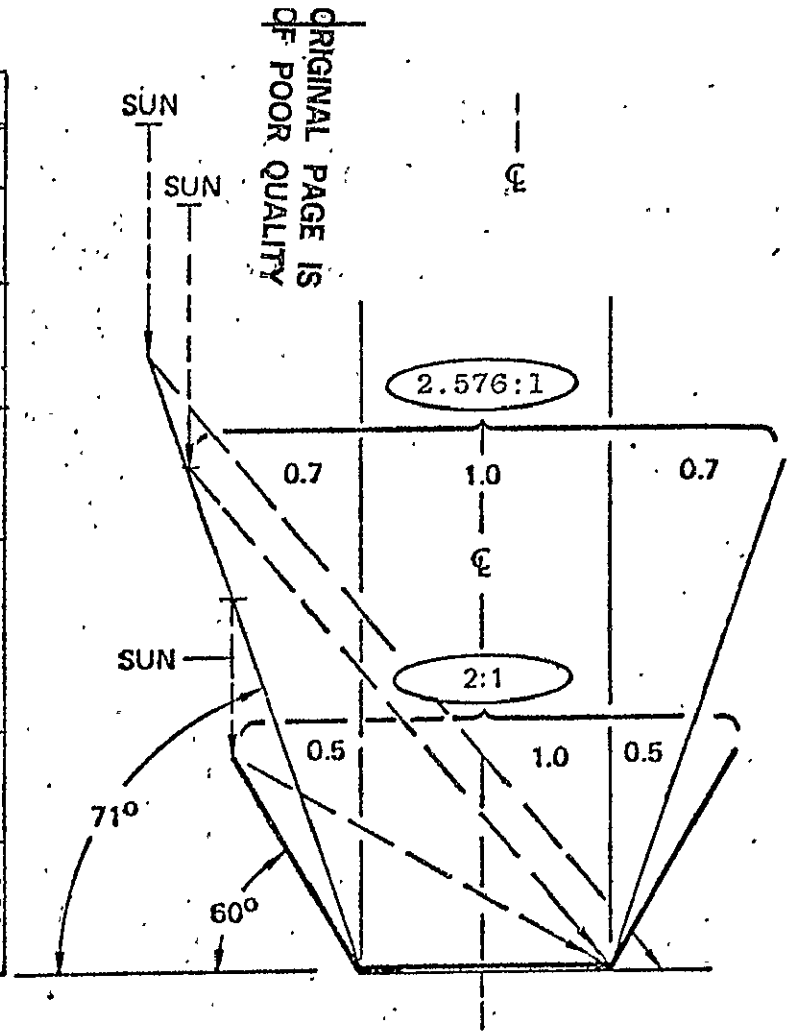

ORIGINAL PAGE IS OF POOR QUALITY

COPLANAR SATELLITE CONFIGURATION AND CONSTRUCTION CONCEPT

This chart shows the reference coplanar satellite configuration used in the various trade off comparisons. This concept utilizes GaAlAs solar arrays at a concentration ratio of 2. The solar panels are arranged in a 4×9 matrix to provide power to the end mounted antenna. The last bay of solar panels can be removed by reducing the misorientation allowance during summer solstice from 23.5° to 14.48° by tipping the entire configuration 9.02°. This approach is part of the attitude control and stationkeeping subsystem considerations and has a major impact on solar array sizing, i.e., reducing the overall solar array area requirements from $30.6\times10^6 m^2$ to $28.4\times10^6 m^2$.

COPLANAR SATELLITE CONFIGURATION & CONSTRUCTION CONCEPT

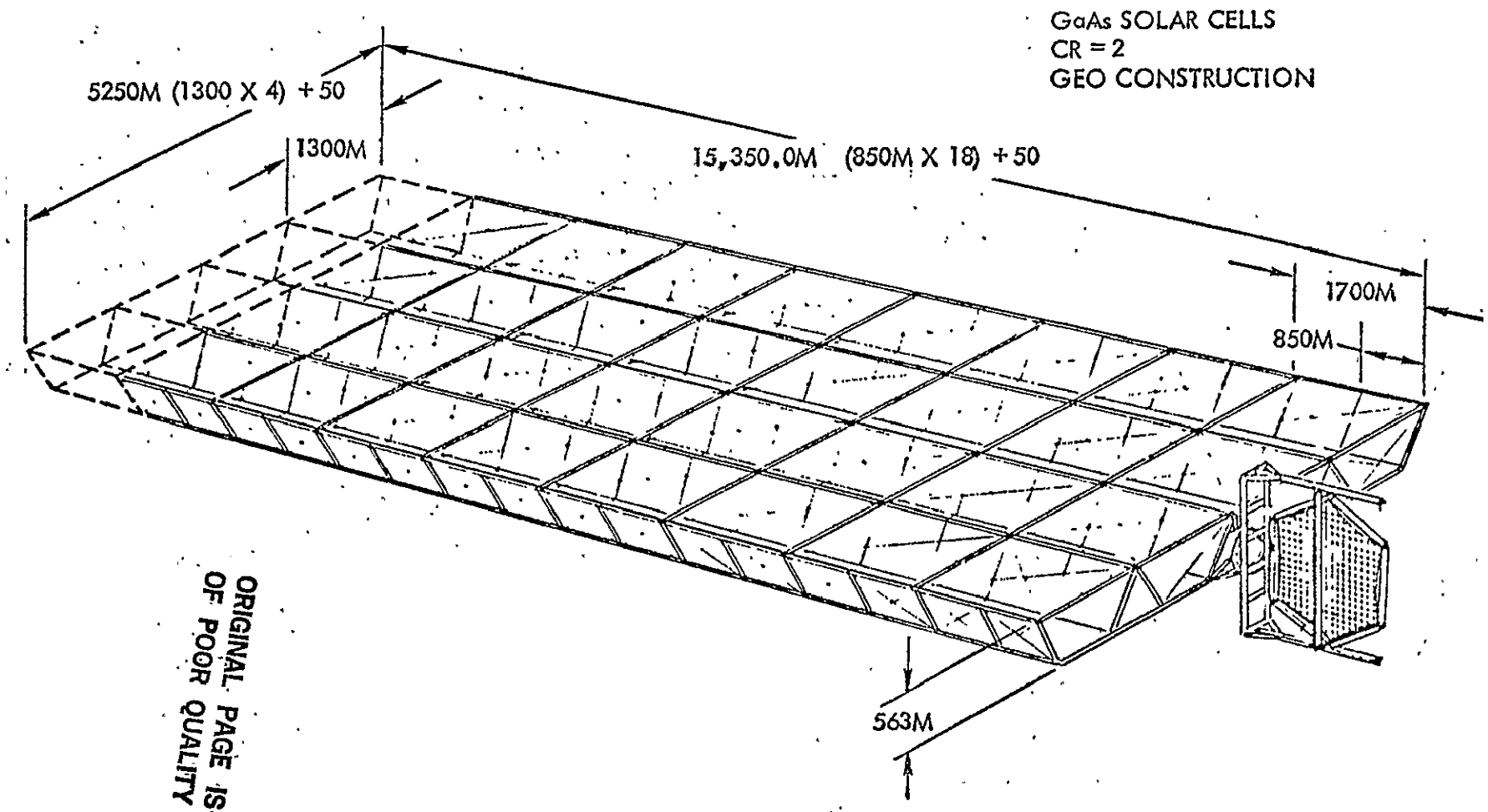

ORIGINAL PAGE IS OF POOR QUALITY

CONFIGURATION OPTIONS

This chart identifies eight (8) different configuration options compared in the trade study. The major comparisons showed the impact from: solar cell material selection (GaAs and Silicon), concentration ratio, antenna mounting position (end and center), radiation annealable and non-annealable assumptions, and solar array width and length ratio.

For the study, solar cell and power distribution efficiencies were held constant at the values shown in the lower right.

CONFIGURATION OPTIONS

REFERENCE CO-PLANAR
(GaAs CR=2 SELF ANNEALING)
END MT. ANTENNA
CENTER MT. ANTENNA

GaAs CO-PLANAR
(CR=1; END MOUNTED ANT.)
SELF ANNEALABLE
NON ANNEALABLE

SILICON CO-PLANAR
(CR=1, END MT. ANTENNA)
INDUCED ANNEALABLE
NON ANNEALABLE

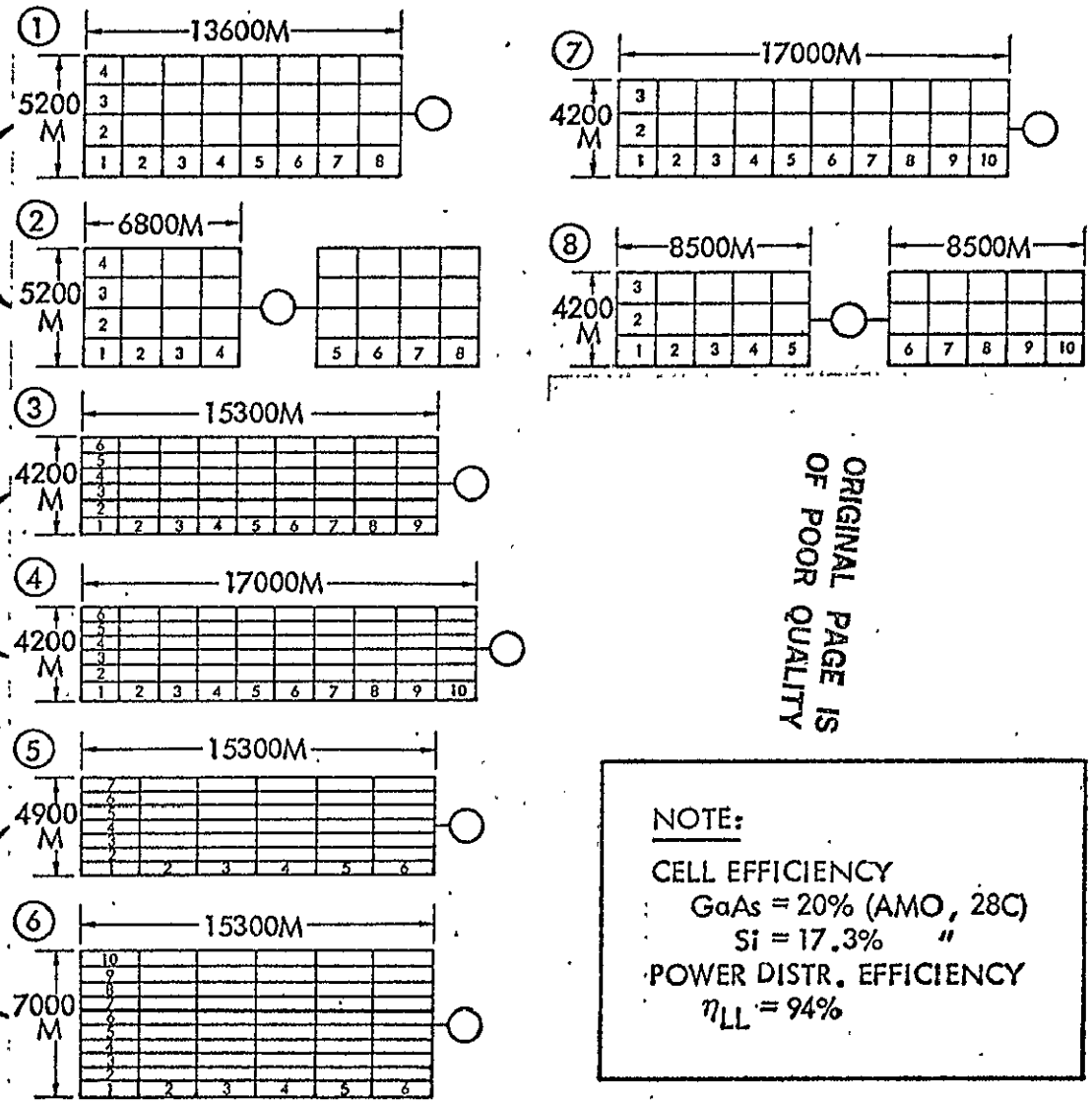

ORIGINAL PAGE IS OF POOR QUALITY

NOTE:

CELL EFFICIENCY
GaAs = 20% (AMO, 28C)
Si = 17.3% "
POWER DISTR. EFFICIENCY
η_{LL} = 94%

CONFIGURATION OPTION COMPARISON DATA

This chart presents the summary comparison data on the eight configuration options studied. Option 1 and 2 is GaAs CR=2 for end mounted and center mounted antennas. Option 6 and 7 differ from 1 and 2 in that a narrow width is utilized (i.e., 3 trough wide vs 4). Options 3 and 4 are the GaAs CR=1 for annealable and nonannealable considerations. Options 4 and 5 are silicon CR=1 for annealable and nonannealable. The First Quarter baseline (i.e., 2 tier configuration) is presented for reference only.

Conclusions reached from the data is that the difference between 4 trough width and 3 trough width in terms of weight is negligible (<400,000 kg). However, there is a significant weight savings for a center mounted antenna ($\sim 2.0 \times 10^6$ kg). This is due to the savings in power distribution weight. A small difference in weight is shown between annealable and nonannealable GaAs CR=1. Major weight differences are shown for the silicon vs gallium arsneide and for annealable vs nonannealable silicon.

CONFIGURATION OPTION COMPARISON DATA

CONFIGURATION	1	2	3	4	5	6	7	8	FIRST Q BASELINE
CELL MATERIAL	GaAs	→	→	→	Si	→	GaAs	→	→
CONC RATIO	2	→	1	→	→	→	2	→	→
ANT MOUNT	END	CENTER	END	→	→	→	→	CENTER	→
RADIATION DEGRAD FACTOR	.96	→	→	.84	.96	.70	.96	→	→
CELL OUTPUT (W/M^2)	362.7	→	218.2	190.9	182.9	133.4	362.7	→	336.6
SOLAR CELL AREA (10^6 M^2)	28.4	→	47.2	53.95	56.3	77.2	28.4	→	30.6
REFLECTOR AREA (10^6 M^2)	57.6	→	—	—	—	—	57.6	→	61.2 (650)
BAY DIMENSIONS (M)	700 X 1700	→	→	→	700 X 2550	→	750 X 1700	→	600 X 1600
NUMBER SOLAR CELL BAYS	4 X 8 = 32	→	6 X 9 = 54	6 X 10 = 60	7 X 6 = 42	10 X 6 = 60	3 X 10 = 30	→	3 X 12 = 36 (1350)
REFL BAY DIMENSION (M)	1300 X 1700	→	—	—	—	—	1400 X 1700	→	1250 X 1600
PLAN FORM (M)	5200 X 13600	→	4200 X 15300	4200 X 17000	4900 X 15300	7000 X 15300	4200 X 17000	→	3850 X 19200
PLAN FORM AREA (10^6 M^2)	70.72	→	64.3	71.4	74.97	107.1	71.4	→	73.92
NO. SWITCHGEAR (ON ARRAY)	1120	→	1890	2100	2436	3480	1140	→	1260
COLLECTOR ARRAY (10^6 KG)									
STRUCTURE & MECH	2.156	→	2.043	2.168	2.230	2.791	2.156	→	3.825
SOLAR PANELS	7.258	→	11.897	13.595	23.988	34.506	7.258	→	7.722
SOLAR REFLECTORS	1.182	→	—	—	—	—	1.182	→	1.108
POWER DISTRIBUTION	2.719	1.55	2.879	2.545	3.058	3.87	3.03	1.272	1.081
ATT CONTROL/IMS/ROT JT	.385	→	.350	.389	.408	.583	.385	→	.385
	(13.699)	(12.53)	(17.259)	(18.697)	(29.684)	(41.750)	(14.011)	(12.253)	(14.127)
ANTENNA SECTION	16.297	→	→	→	→	→	→	→	→
SUBTOTAL	29.996	28.827	33.556	34.994	45.981	58.047	30.308	28.55	30.424
25% GROWTH	7.499	7.206	8.389	8.749	11.495	14.512	7.577	7.137	7.606
TOTAL	37.495	36.033	41.945	43.743	57.476	72.559	37.885	35.687	38.029

ORIGINAL PAGE IS OF POOR QUALITY

SATELLITE CONFIGURATION SUMMARY

This chart summarizes the results of the study to define the preferred satellite configuration shape. GaAs CR=2 is the preferred concept and shows a significant mass savings compared to CR=1 (6.3 to 8.1×10^6 kg) and/or Silicon CR=1 (21.8 to 36.9×10^6 kg). A 60° reflector angle is preferred because of its simpler structural design requirements. The center mounted antenna leads to a significant mass savings (1.5 to 1.8×10^6 kg) due to shorter conductor lengths. This consideration is important when considering design uncertainties in the power distribution subsystem. A three trough configuration results in a narrow cross section and this leads to a preferred "single pass" construction scenario. The remaining conclusions are self-explanatory.

SATELLITE CONFIGURATION SUMMARY

• GaAs CR = 2	- GaAs CR = 1 SATELLITE WEIGHT PENALTY RANGE 6.26×10^6 KG TO 8.06×10^6 KG. SILICON CR = 1 SATELLITE WEIGHT PENALTY RANGE 21.8×10^6 KG TO 36.9×10^6 KG.
• 60^0 REFLECTOR SLANT ANGLE	- COST/MASS SAVINGS INSUFFICIENT (AT GREATER ANGLES) TO OVERCOME ADDED COMPLEXITY.
• CENTER MOUNTED ANTENNA	- OFFERS LOWEST WEIGHT OF THOSE STUDIED. SIGNIFICANT POWER DISTRIBUTION WEIGHT SAVINGS RANGE 1.5×10^6 KG TO 1.8×10^6 KG.
• THREE TROUGH REFLECTORS	- LIGHTEST WEIGHT OF THOSE STUDIED. SINGLE PASS CONSTRUCTION SCENARIO IS PREFERRED AND NARROW CONFIGURATION SIGNIFICANTLY REDUCES SIZE OF CONSTRUCTION FIXTURE.
• SPACE FRAME ANTENNA STRUCTURE	- ACCEPTABLE WEIGHT PENALTY. COMPRESSION FRAME SYSTEM REQUIRES COMPLEX CABLE SYSTEM AND MAJOR CONCERN WITH FREQUENCY RESPONSE, CONCAVITY (BOWING), FAILURE EFFECTS, AND PHASE CONTROL/ATTITUDE CONTROL INTERFERENCES.
• KLYSTRON BACKSIDE INSTALLATION	- REQUIRES HIGH TEMPERATURE COMPOSITES FOR STRUCTURAL MATERIALS BUT AVOIDS 3% BLOCKAGE FOR "POKE THROUGH".

SPS COMPUTER PROGRAM STRUCTURAL MODEL

Using the substructure features of NASTRAN, the two tier design configuration for Exhibit A/B was modeled. The sketch, using the CRT printouts, depict the buildup of the SPS structure through the combination of the substrutures. The right-hand wing is a combination of three translated Substructure No. 1 units. Similarly, the left-hand wing is a combination of three Substructure No. 4 units. The center structure is a combination of the center section, Substructure No. 2, and the antenna and rotating ring, Substructure No. 3. Finally, the center section, the left-hand wing, and right-hand wing are combined to form the SPS structural model.

SPS COMPUTER PROGRAM STRUCTURAL MODEL

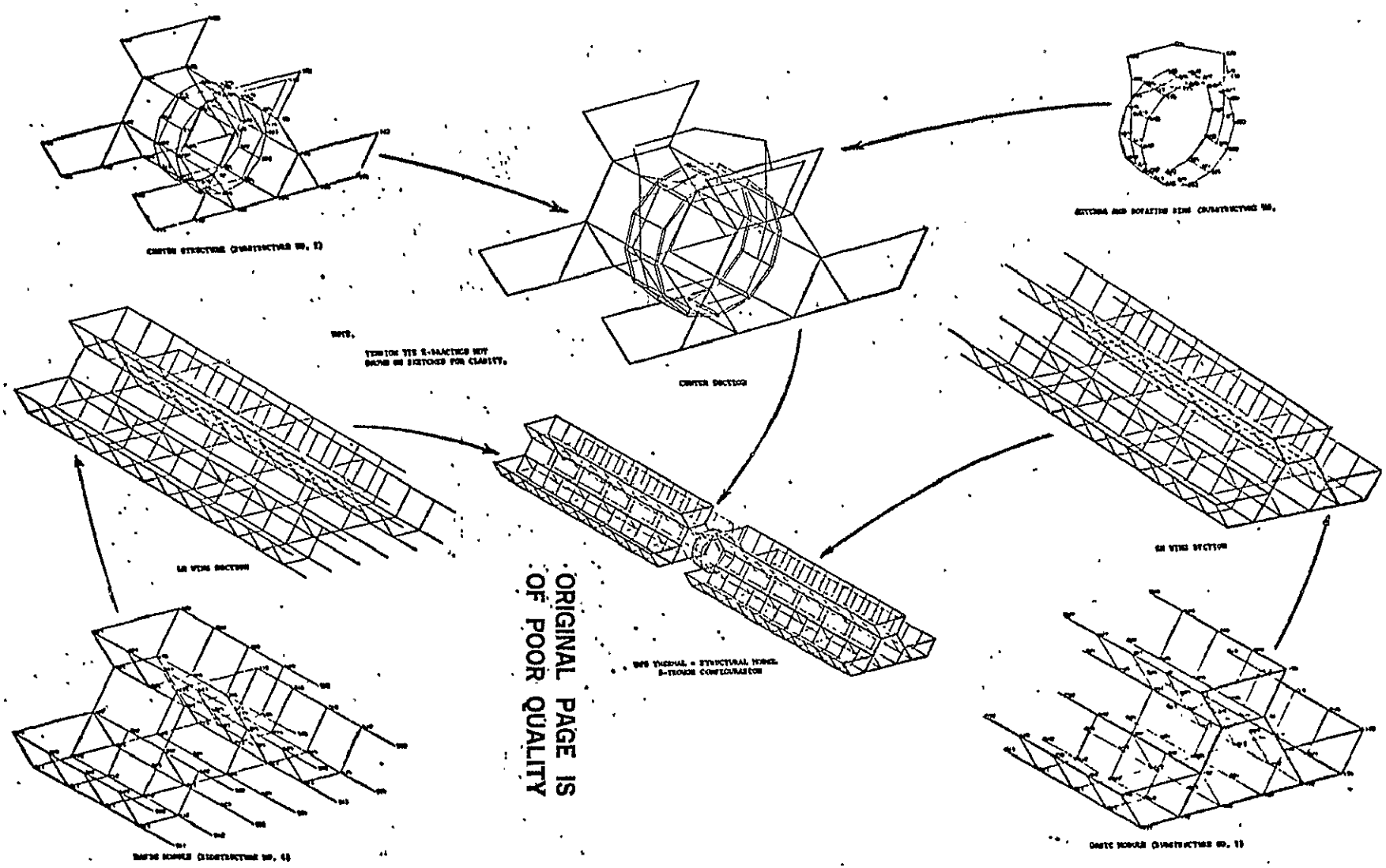

ORIGINAL PAGE IS
OF POOR QUALITY

BASIC MODULE TEMPERATURES

This chart shows a portion of the temperatures used for the solar trough members in the computer program analysis. The thermal effects are highly dependent upon the assembly temperature of the elements; however, due to lack of an assembly temperature profile, an assembly temperature of 0°C was used.

BASIC MODULE TEMPERATURES

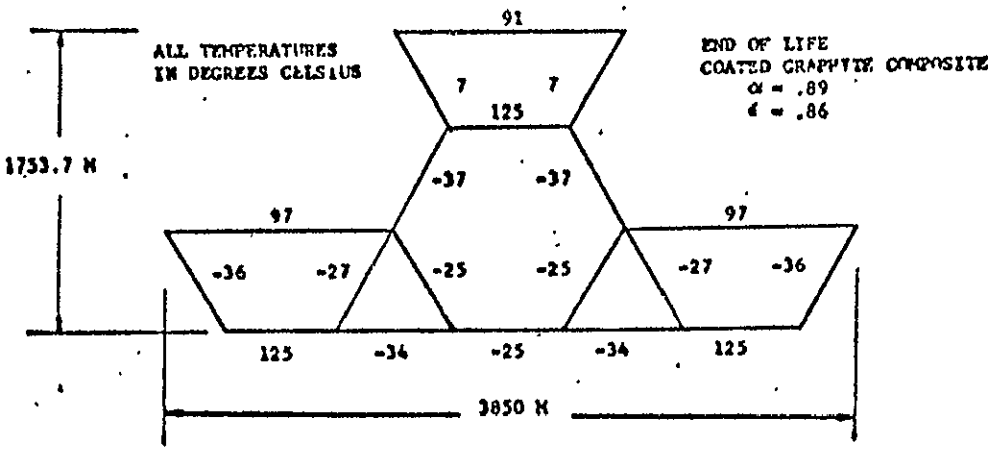

Graphite Structural Configuration Temperatures

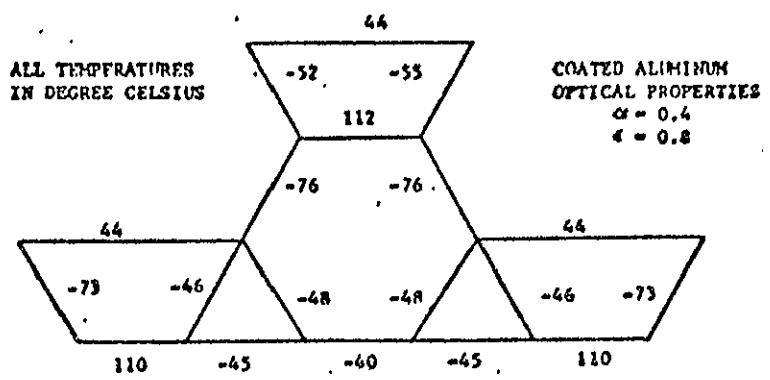

Aluminum Structural Configuration Temperatures

ORIGINAL PAGE IS
OF POOR QUALITY

DEFLECTIONS—SPS UNITS

This chart summarizes the end deflections of the SPS unit for the three analysis cases considered. The pretension, the force necessary to keep the X-braces from becoming compressed under the given thermal and loading environment, is as follows:

Aluminum design	Steel X-bracing	552 MPa (80 Ksi)
Graphite design	Graphite X-bracing	137 MPa (20 Ksi)

DEFLECTIONS - SPS UNIT

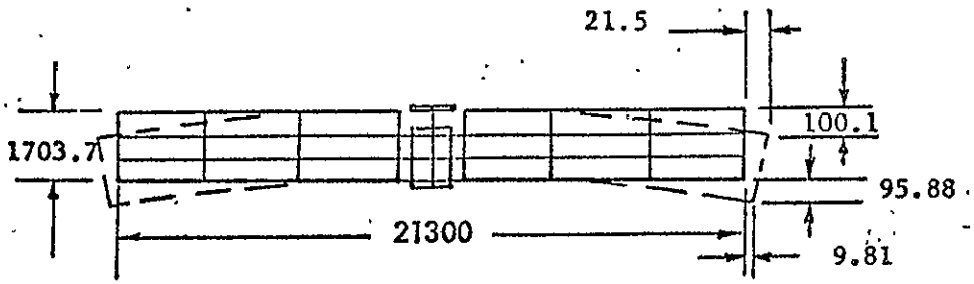

NOTE:
· ALL DIMENSIONS IN METERS

a) Case 1. Aluminum, No Pretension in X-Bracing

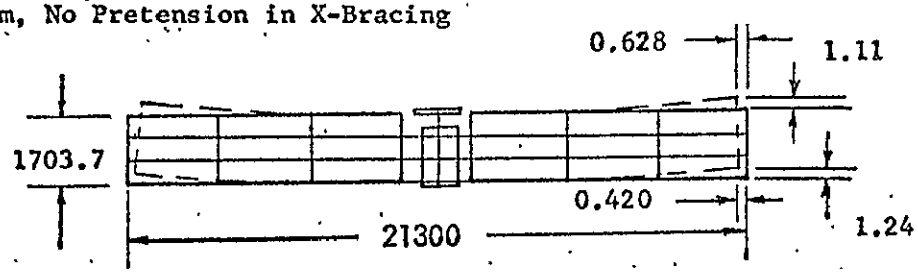

b) Case 2. Composite, Pretension in X-Bracing

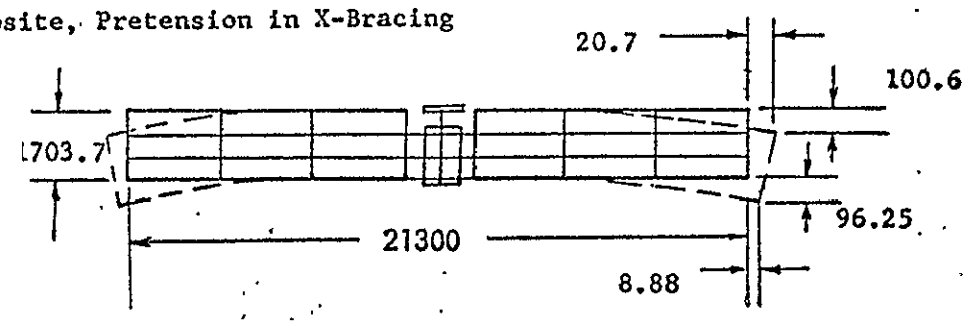

c) Case 3. Aluminum, Pretension in X-Bracing

ORIGINAL PAGE IS OF POOR QUALITY

DEFLECTIONS ARE SEVERAL ORDERS OF MAGNITUDE LARGER FOR ALUMINUM AS FOR GRAPHITE MATERIAL.

RESULTS—STRESS

The chart presents the stress of selected members for the graphite and aluminum material construction under pre-tensioning. As shown in the table, the stresses are much higher for the aluminum case than for the graphite case. The maximum bending stresses for many of the members exceed the crippling allowables of the elemental beam caps.

RESULTS - STRESS

STRESS MAGNITUDES ARE 3 TIMES AND LARGER FOR ALUMINUM AS FOR GRAPHITE MATERIAL.

TABLE . COMPRESSIVE STRESS COMPARISON

ELEMENT NO.	CASE 2, COMPOSITE				CASE 3, ALUMINUM			
	AXIAL STRESS		MAX. BEND STRESS		AXIAL STRESS		MAX. BEND STRESS	
	MPa	(KSI)	MPa	(KSI)	MPa	(KSI)	MPa	(KSI)
101	-1.01	(-.14)	-8.72	(-1.26)	-5.88	(-.85)	-131.7	(-19.10)
102	-1.02	(-.14)	-1.89	(-.27)	-2.85	(-.41)	-58.4	(-8.47)
103	-0.87	(-.12)	-1.47	(-.21)	-9.54	(-1.38)	-72.7	(-10.50)
104	-1.02	(-.14)	-1.89	(-.27)	-2.85	(-.41)	-58.4	(-8.47)
105	-1.02	(-.14)	-8.72	(-1.26)	-5.88	(-.85)	-131.7	(-19.10)
106	-1.99	(-.28)	-4.98	(-.72)	-9.81	(-1.42)	-41.3	(-5.99)
107	-7.68	(-1.11)	-15.90	(-2.31)	-10.31	(-1.50)	-80.2	(-11.63)
108	-0.71	(-.10)	-2.21	(-.32)	-3.20	(-.46)	-8.4	(-1.22)
109	-7.68	(-1.11)	-15.92	(-2.31)	-10.03	(-1.45)	-80.2	(-11.63)
114	-0.21	(-.03)	-1.15	(-.16)	-2.74	(-.39)	-129.5	(-18.78)
115	-0.70	(-.10)	-2.60	(-.37)	-4.46	(-.64)	-22.5	(-3.26)
116	-7.65	(-1.11)	-16.59	(-2.41)	-15.70	(-2.28)	-110.1	(-15.97)
117	-0.21	(-.03)	-1.52	(-.17)	-2.74	(-.39)	-129.5	(-18.78)
118	-1.19	(-.17)	-3.85	(-.55)	-5.02	(-.73)	-59.5	(-8.63)
119	-7.61	(-1.10)	-1.52	(-.22)	-11.06	(-1.68)	-36.1	(-5.24)
1204	-2.08	(-.30)	-2.73	(-.39)	-8.26	(-1.20)	-80.7	(-11.70)
1206	-7.58	(-1.10)	-17.62	(-2.56)	-27.48	(-3.99)	-85.1	(-12.34)
1208	-7.01	(-1.02)	-18.09	(-2.62)	-8.66	(-1.26)	-49.6	(-7.19)
1210	-6.94	(-1.01)	-18.53	(-2.69)	-9.83	(-1.43)	-37.1	(-5.38)
1214	-6.90	(-1.00)	-16.22	(-2.35)	-12.71	(-1.84)	-17.7	(-2.57)
1213	-7.53	(-1.09)	-9.11	(-1.32)	-32.55	(-4.72)	-102.6	(-14.88)

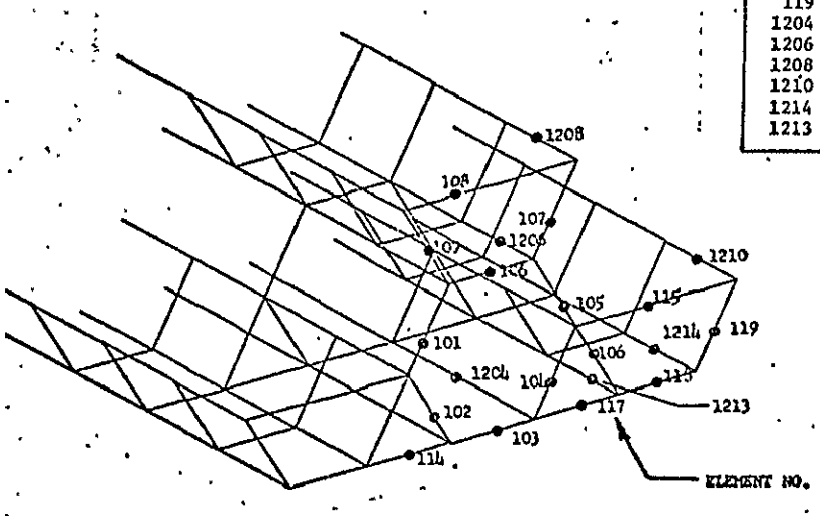

Element Identification Number

ORIGINAL PAGE IS OF POOR QUALITY

SPECULAR REFLECTANCE (0.4 μm - 0.9 μm)

A more appropriate concentrator reflectivity can be derived from measured data in the conversion band of GaAlAs. Data measured at Sandia for aluminized Teflon indicate a beginning-of-life magnitude of 0.87, and this value will be applied to the SPS reflectors. Lifetime deterioration estimates also have been recomputed. A math model of the meteoroid exposure levels has been developed. The model indicates that a loss of about one-half of one percent can be expected. Because of the relatively low temperatures of the reflectors, thermal cycling degradation due to eclipse passage should be slight and is estimated to be one percent. The reflector radiator resistance has been increased from earlier estimates because it has been shown that the test data used as a basis for predicting radiation losses greatly exceeded the operation spacecraft environmental exposure. Consideration of these factors indicates that an end-of-life value of 0.827 can be expected.

SPECULAR REFLECTANCE (0.4 μm - 0.9 μm)

ORIGINAL PAGE IS OF POOR QUALITY

- SILVERED GLASS—0.83
- 3M SCOTCHCAL 500—0.85 (ALUMINIZED ACRYLIC)
- SHELDAHL ALUMINIZED TEFLON—0.87 [1] (B.O.L.)
- THIRTY-YEAR DEGRADATION FACTORS
  - METEOROID FACTOR = 0.995
  - THERMAL CYCLING = 0.990 (DUE TO EXPANSION/CONTRACTION INITIATED BY ECLIPSE PASSAGE)
  - RADIATION RESISTANCE = 0.965
  - 30-YEAR E.O.L. REFLECTIVITY = 0.827

- SPS 30-YR DOSAGE, $<10^9$ RAD
- MECHANICAL REFLECTANCE DEGRADATION FOR KAPTON, 5×10^{10} RAD

(JPL—SOLAR SAIL WORK, WALLY ROWE)

[1] REFERENCE: R. B. PETTIT
NASA A77-49074

SOLAR PROTON MODEL ENVIRONMENT

Different solar proton models are presented in the figure. One major difference in the models is how the low energy portion of the solar flares are accounted. Present measured data is limited to proton energies of >10 MeV (essentially solar cycles 19 and 20). A conservative extrapolation assumes a power law spectrum at low energies and a more optimistic assumption is that the exponential rigidity spectral description holds below 10 MeV. The Rockwell concept is based on the Aerospace model shown by the dashed line. This differs from the GPS Ø3 Aerospace model in that a safety factor (SF) of 1.0 is used rather than SF = 1.5. The GPS Ø3 model is recommended for use during the five peak years, e.g., 1978 through 1982. Since the SPS program spans a total of 60 years it did not seem reasonable to impose a penalty by superimposing continuous peak years. Because of the very significant variations in these models and their impacts on design it is recommended that more detailed study be made to better define the SPS solar proton environment for the years of interest.

SOLAR PROTON MODEL ENVIRONMENT

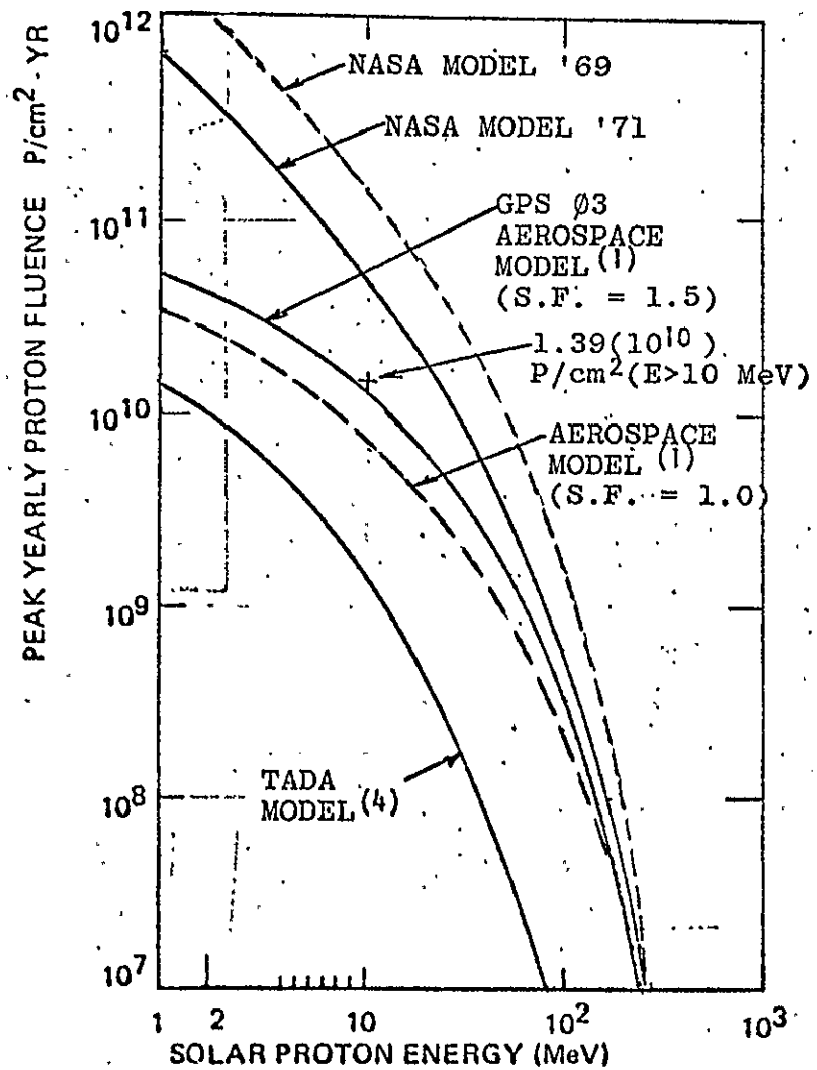

SOLAR CYCLE NO.	PERIOD OF CYCLE	DURATION OF MAXIMUM ACTIVITY
19	1953-1964	1955-1961
20	1964-1975	1965-1972
21	1975-1986	1977-1983

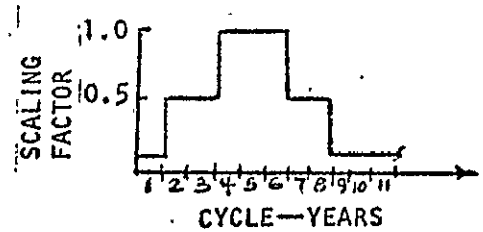

REFERENCES:

1. R. G. PRUETT—AEROSPACE CORP.
2. DR. B. E. ANSPAUGH—JPL
3. DR. A. MEULENBERG, JR—COMSAT
4. H. Y. TADA—TRW

SOLAR CELL DAMAGE EQUIVALENT/MEV
ELECTRON FLUENCE VS SHIELD DENSITY

The solar array electrical output is affected by the on-orbit environment which includes trapped particle radiation, solar flare proton radiation, ultraviolet radiation, and the temperature cycling associated with the eclipse seasons. The natural trapped particle radiation environment was obtained from the "Solar Cell Radiation Handbook," TRW Report 21945-6001-RV-00. The trapped electrons are based on the AE-4 model of the outer radiation zone electron environment. The solar flare proton model was obtained by averaging the integral flux values for the 19th and 20th solar cycles similar to the Aerospace model recommended for GPS phase 3 satellite design (Reference: R. G. Pruett - Aerospace Corporation). The values for damage equivalent 1 Mev electrons are taken from "A Proposal for Global Positioning Satellite Electrical Power Subsystem," General Electric, Space Division Proposal No. N-30065, 28 Feb. 1974.

The impact from a single event ('72 single worst recorded event) is shown for comparison.

SOLAR CELL DAMAGE EQUIVALENT 1-MeV ELECTRON FLUENCE VS. SHIELD DENSITY

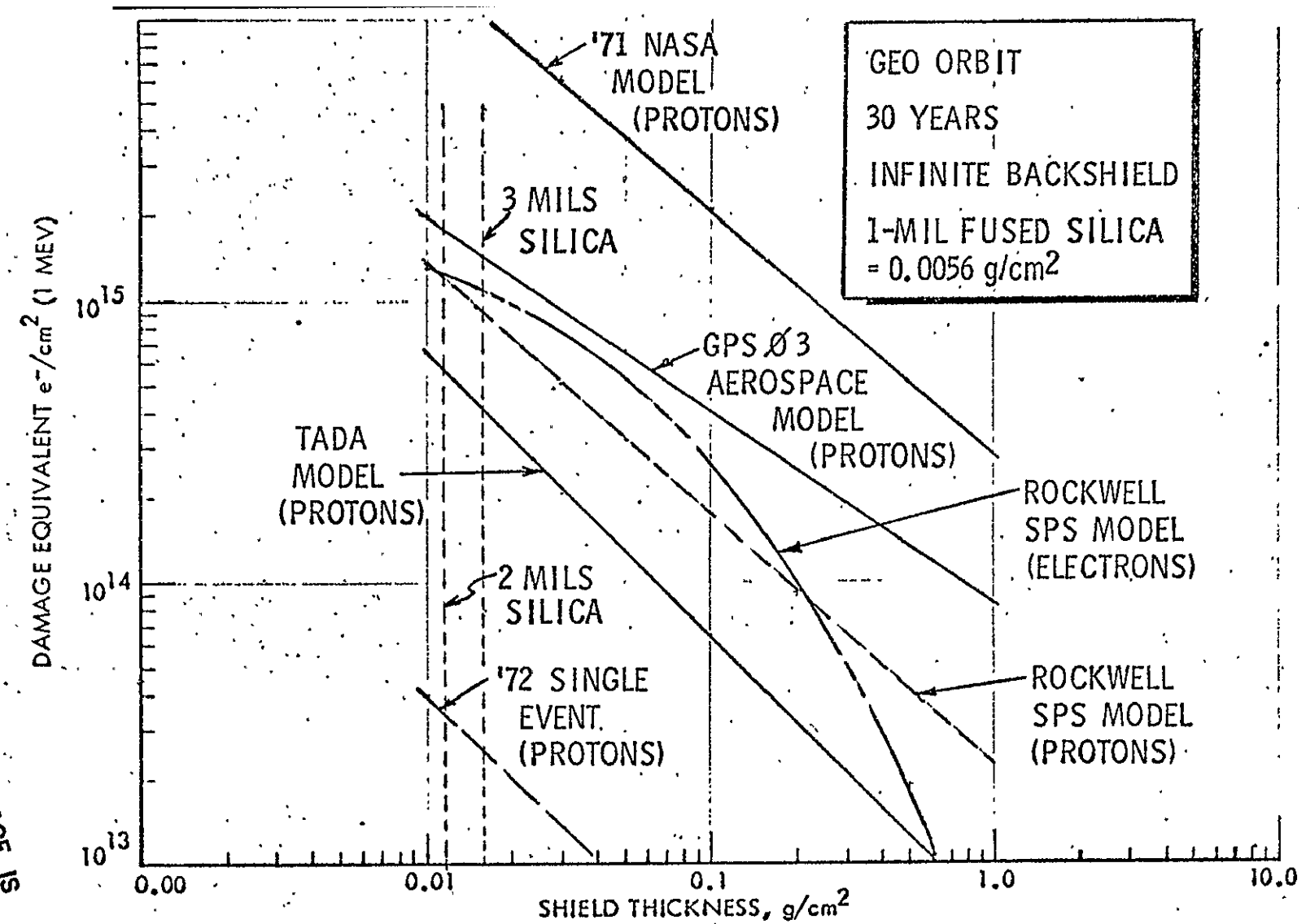

ORIGINAL PAGE IS OF POOR QUALITY

TOTAL 1-MeV EQUIVALENT FLUENCE (e^-/cm^2) - 30 YEARS

The 30 GEO equivalent 1 MeV fluence (e^-/cm^2) is obtained for a solar proton model using peak yearly proton fluence and applying an appropriate scale factor (5.3) for a complete 11 year solar cycle. The values for an 11 year cycle are then multiplied by a factor of 3 to obtain a 30 year model. The values in the Table are calculated for the solar flare models shown previously. This includes 2.35×10^{15} for GEO trapped electron 1 MeV equivalent for 30 years. The Boeing predictions are given for comparison. It is obvious that major differences result from the assumptions taken for accounting of protons below 10 MeV and with Rockwell including significant 1 MeV equivalent trapped electron fluence (2.35×10^{15} e/cm^2). Some later data indicates that the trapped electron fluence may be approximately a factor of 3 greater than shown by the AE 4 model. Reference - Private Communication: M. Teage, J. I. Vetti, "AEI7 (High) AEI7 (Low) Material electron environment model data decks," NASA Goddard Space Science Data Center).

The Hughes model noted was based on trapped electrons, M. Teage and J. I. Vetti, "AE-7 Trapped Electron Environment" (to be published), and the total accumulated proton fluences for the 20th solar cycle (E. G. Stassingopoulos and J. H. King, "An Emperical Model of Energetic Solar Proton Fluxes with Applications to Earth Orbiting Spacecraft", NASA GSFC X-601-72-489, December 1972.

TOTAL 1-MeV EQUIVALENT FLUENCE (e^-/cm^2) - 30 YEARS

SOLAR FLARE PROTON MODEL	NASA '71 MODEL	GPS PHASE 3 AEROSPACE MODEL	TADA MODEL	ROCKWELL SPS MODEL
SILICON 3-MIL COVER 2-MIL BACK SUBSTRATE	2.55×10^{16}	5.6×10^{15}	3.3×10^{15}	4.4×10^{15}

NOTE:

(1) INCLUDES 2.35×10^{15} FOR GEO TRAPPED ELECTRON 1-MeV EQUIVALENT FOR 30 YEARS

(2) BOEING MODEL PREDICTS 2×10^{16} 1-MeV ELECTRON EQUIV/cm^2 USING CONSERVATIVE EXTRAPOLATION ASSUMING POWER LAW SPECTRUM AT LOW PROTON ENERGIES (<10 MeV THE MORE OPTIMISTIC ASSUMPTION OF EXPONDENTIAL RIGIDITY SPECTRAL YIELDS 2.5×10^{15} 1-MeV ELECTRON EQUIV/cm^2. BOEING STATES 30 YR ELECTRON FLUENCE $= 2.9 \times 10^{14}$ e/cm^2 (Phase 1 Final Briefing, Volume VII, December 1978)

(3) HUGHES MODEL PREDICTS 5.2×10^{15} 1-MeV ELECTRON EQUIV/cm^2, 30 YEARS GEO Reference: (AlGa)As-GaAs Solar Cell Study for Rockwell International, L. J. Goldhammer, R. Knechtli, S. Kamath, and R. Loo; Final Report, November 1977. Note: 3-mil cover, 2-mil Kapton substrate.

ORIGINAL PAGE IS OF POOR QUALITY

NORMALIZED MAXIMUM POWER VS 1-MEV ELECTRON FLUENCE

This chart shows effects of 1 Mev electron radiation on solar cell power output. The data indicates significant differences between the reference sources. In the solar cell comparisons at Rockwell, the curve identified for 50 μm silicon extrapolated JPL - Solar Cell Radiation Handbook was used. This data is taken from several references and represents the mean behavior of n-p silicon solar cell production in the United States. Solar cells produced with significantly different compositions may not show the same radiation loss. The significance of the data is that thinner silicon solar cells, percentagewise, show less radiation degradation than thicker cells.

NORMALIZED MAXIMUM POWER VS. 1 MeV ELECTRON FLUENCE

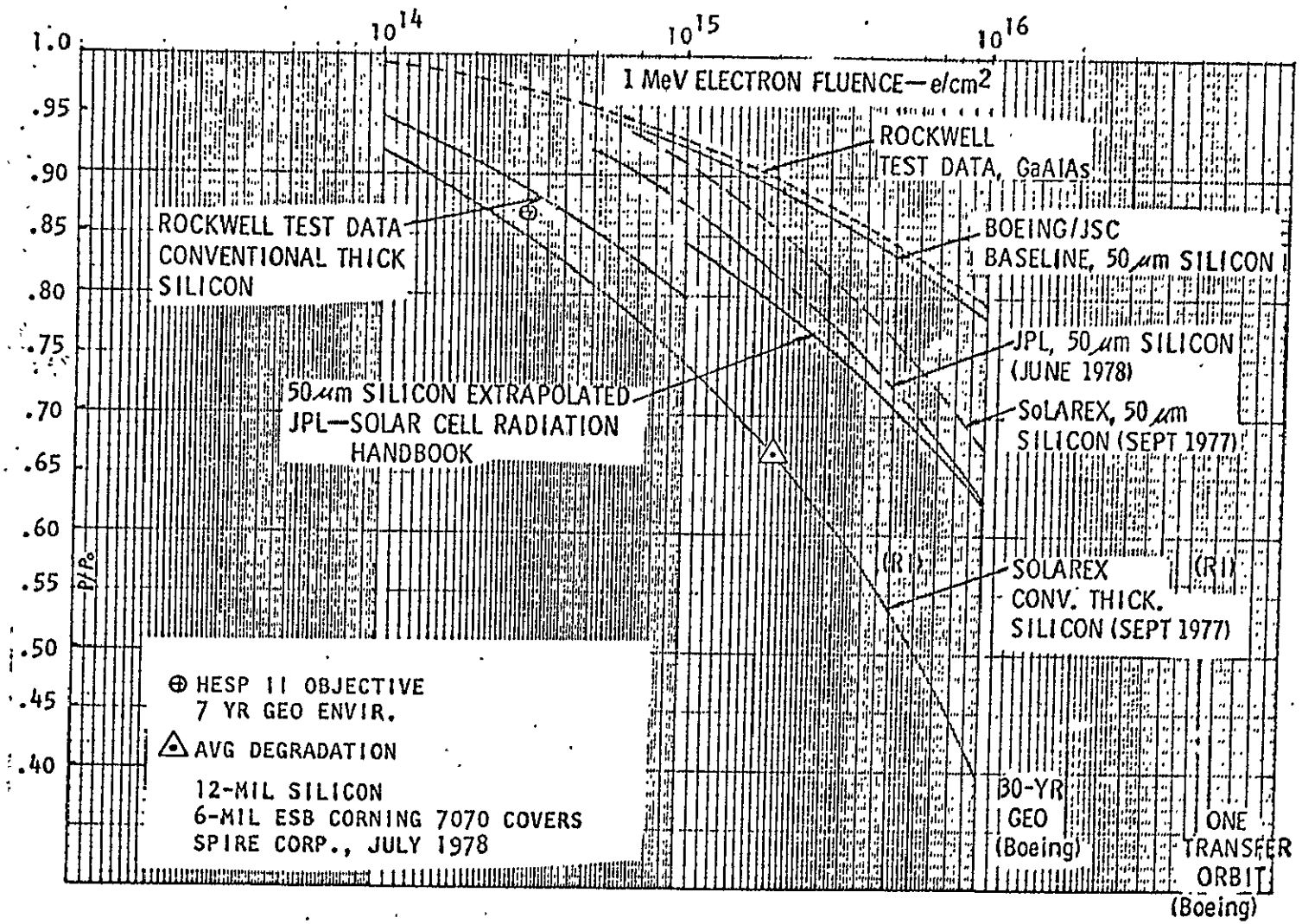

ORIGINAL PAGE IS OF POOR QUALITY

RELATIVE DAMAGE COEFFICIENTS FOR SPACE PROTON IRRADIATION (Pmax)

The results of several studies of proton damage have been summarized in terms of relative silicon solar cell damage as a function of proton energy. These relative damage results, normalized to 10 Mev proton damage, are shown in the Figure (taken from JPL Publication 77-56, Solar Cell Radiation Handbook). Results for several coverslide thicknesses are also shown. The dashed line is the result of GaAs solar cell test data at Rockwell. The equivalent 1 Mev fluence for gallium arsenide solar cells cannot be determined at this time. Only when radiation tests are conducted in which the damage coefficients for both electrons and protons are determined can the equivalent 1 Mev fluence be calculated for gallium arsenide solar cells.

For the present, we are assuming that the equivalent 1 Mev electron fluence for gallium arsenide is reasonably close to silicon for the energy levels of interest (above the cutoff levels with shielding).

The possibility of thermal annealing of radiation damage is of critical importance. Heavier protective cover and solar array substrate thicknesses soon lead to unacceptable weight penalties which can be avoided if thermal annealing is found to be sufficiently effective.

RELATIVE DAMAGE COEFFICIENTS FOR SPACE PROTON IRRADIATION (P_{max})

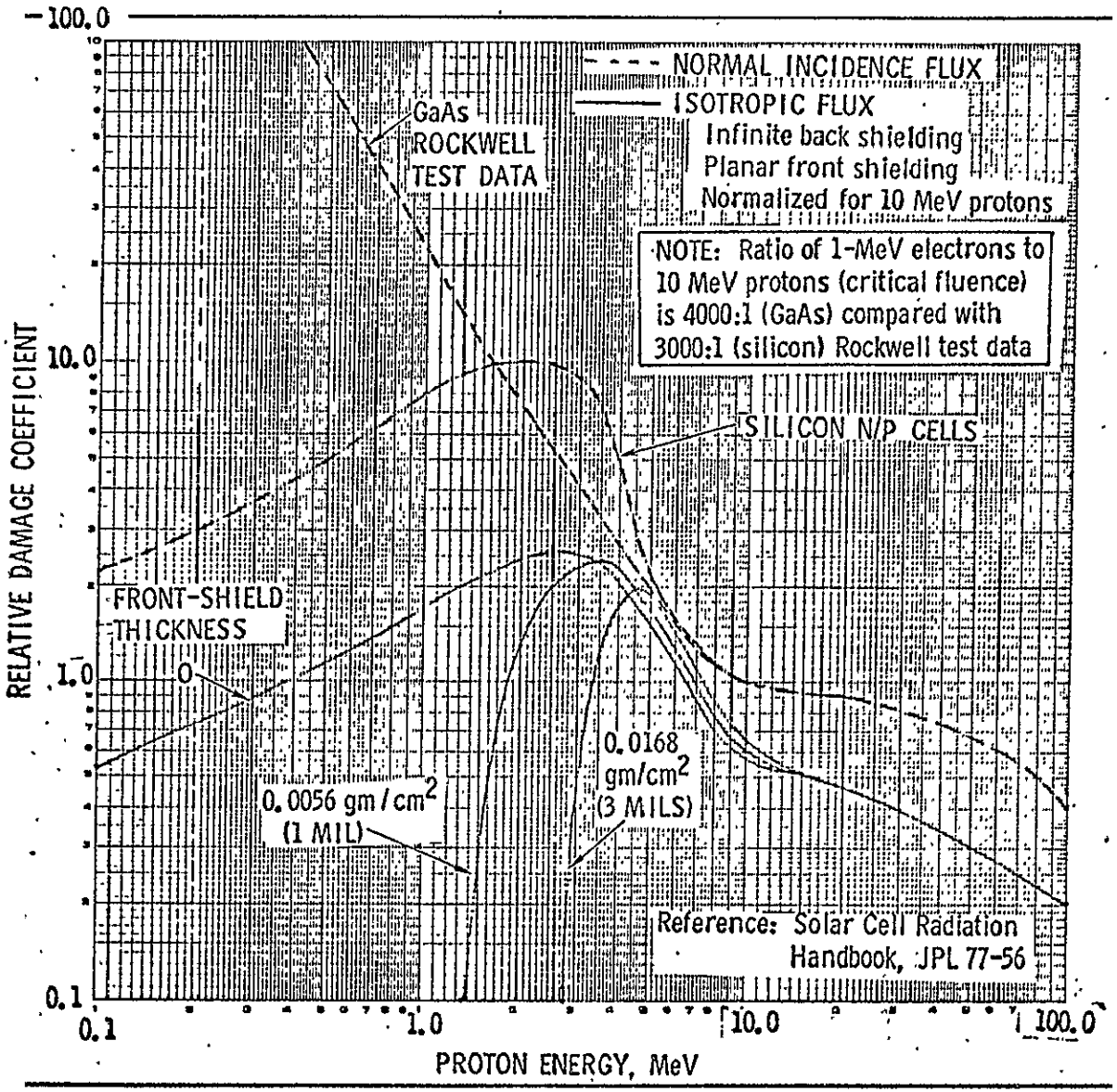

ORIGINAL PAGE IS
OF POOR QUALITY

SOLAR CELL ANNEALING CHARACTERISTICS - ISSUE RESOLUTION

This chart presents an outline of a recommended technology plan designed to determine the radiation damage annealing characteristics for both GaAs and Si solar cells. This would be essentially a 2 year program using selected solar cells, with dedicated test equipment/instrumentation and every effort made to "tighten up" on test procedures and tolerances.

Both GaAs and Si would be irradiated for proton and electron effects followed by annealing (both thermal and laser induced). The annealing tests would be repeated on an array level (something greater than single cells). The advanced thin film GaAs solar cell proposed for the SPS would be included in the test when these experimental cells become available.

SOLAR CELL ANNEALING CHARACTERISTICS—ISSUE RESOLUTION

- USE "BEST" CELLS AVAILABLE
  - GaAlAs/GaAs — SHALLOW JUNCTION (SELECTIVE)
  - Si — 50-μm THICK (ESB COVERS)
- AR COAT & EDGE COAT (INERT EPOXY)
- TEST AT
  - PROTONS — 10 MeV, 3 MeV, 1 MeV, 0.5 MeV
  - ELECTRONS — 1 MeV

GaAlAs/GaAs: ONE WEEK ANNEALING TIME, 140-160°C
CORRECT BY ANALYSIS TO 125°C

- SILICON: COMPARABLE CO_2 LASER ANNEALING

NOTE: Repeat annealing tests on array level

- EVALUATE RELATIVE DAMAGE COEFFICIENTS
- MODEL THIN GaAlAs/Al_2O_3 SOLAR CELL
- TEST GaAlAs/Al_2O_3 EXPERIMENTAL CELLS (WHEN AVAILABLE)

Two-year program with dedicated test equipment/instrumentation, improved test procedures/tolerances/instrumentation, and selected solar cells.

ORIGINAL PAGE IS
OF POOR QUALITY

SOLAR ARRAY EFFICIENCY CHAIN

An updated SPS solar array efficiency chain is shown. These values have been corrected for improved solar cell performance as a result of the satellite being tipped 9.02° during summer solstice, thereby, reducing the inclination angle to the sun from 23.5° to 14.48°. These values were used to size the solar array for satellite concept definition.

A continuous review of subsystem efficiencies is maintained in order to provide updated efficiency factors for the design of the SPS. The summer solstice is taken as the sizing requirement since power output is a minimum during this period.

SOLAR ARRAY EFFICIENCY CHAIN

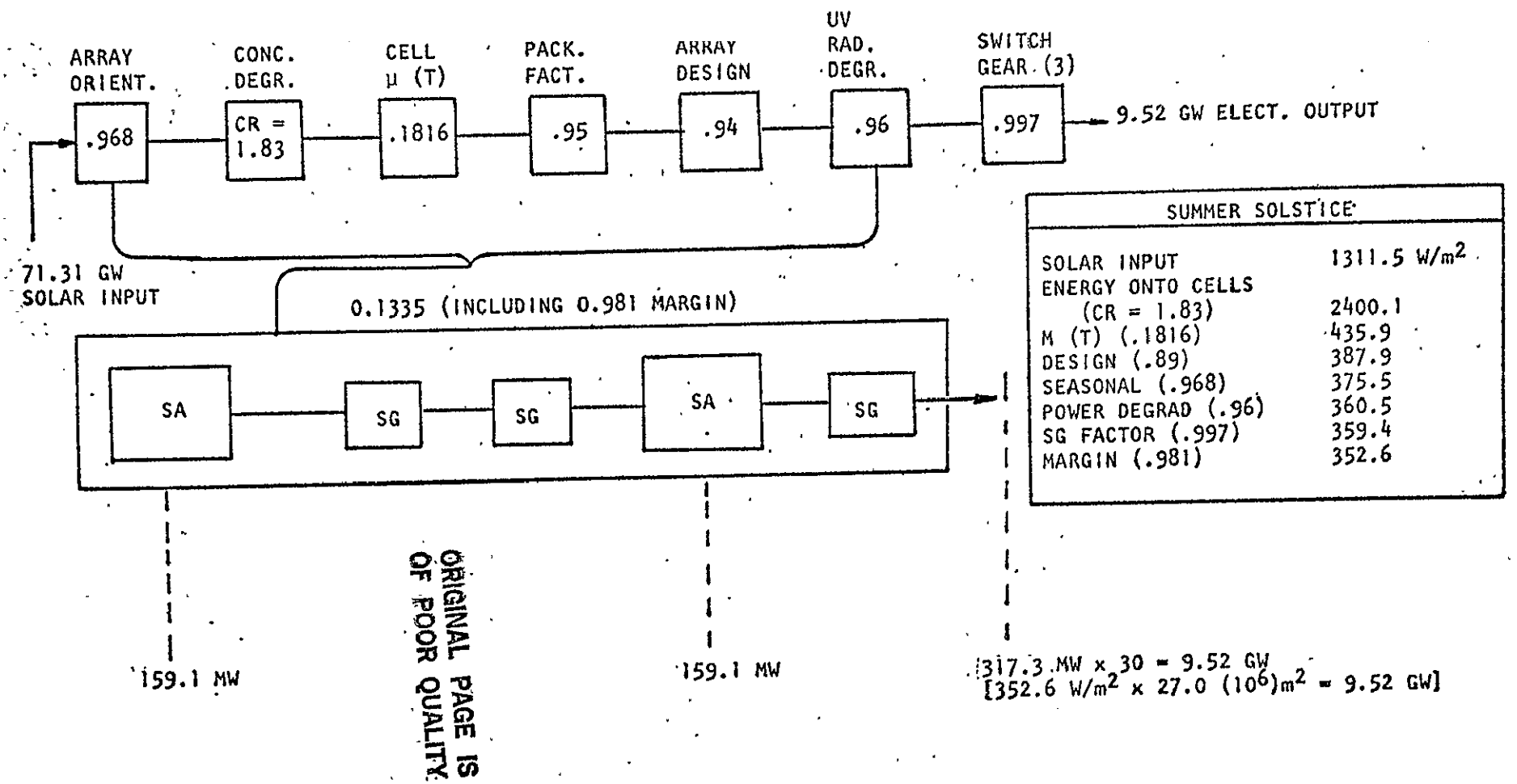

SUMMER SOLSTICE	
SOLAR INPUT	1311.5 W/m^2
ENERGY ONTO CELLS (CR = 1.83)	2400.1
M (T) (.1816)	435.9
DESIGN (.89)	387.9
SEASONAL (.968)	375.5
POWER DEGRAD (.96)	360.5
SG FACTOR (.997)	359.4
MARGIN (.981)	352.6

ORIGINAL PAGE IS OF POOR QUALITY

SYSTEM EFFICIENCY CHAIN – PHOTOVOLTAIC (CR=2)

This chart shows the device/element power efficiency estimates established to-date. The overall efficiency of operations is presently estimated to be approximately 6.47%.

The efficiency chain illustrates the sensitivity of component efficiencies and, in particular, shows the impact on overall efficiency by a slight change in switch gear efficiency, i.e., $\eta_{SG} = .999^{14} = .986$ reference case compared to $.995^{14} = .932$ should the switch gear individual efficiency factor reduce from .999 to .995. The reference system is sized to the following efficiency factors: power distribution = .9381, microwave antenna = .7608; ground system = .6791, and power generation = .1335.

SYSTEM EFFICIENCY CHAIN - PHOTOVOLTAIC (CR-2)

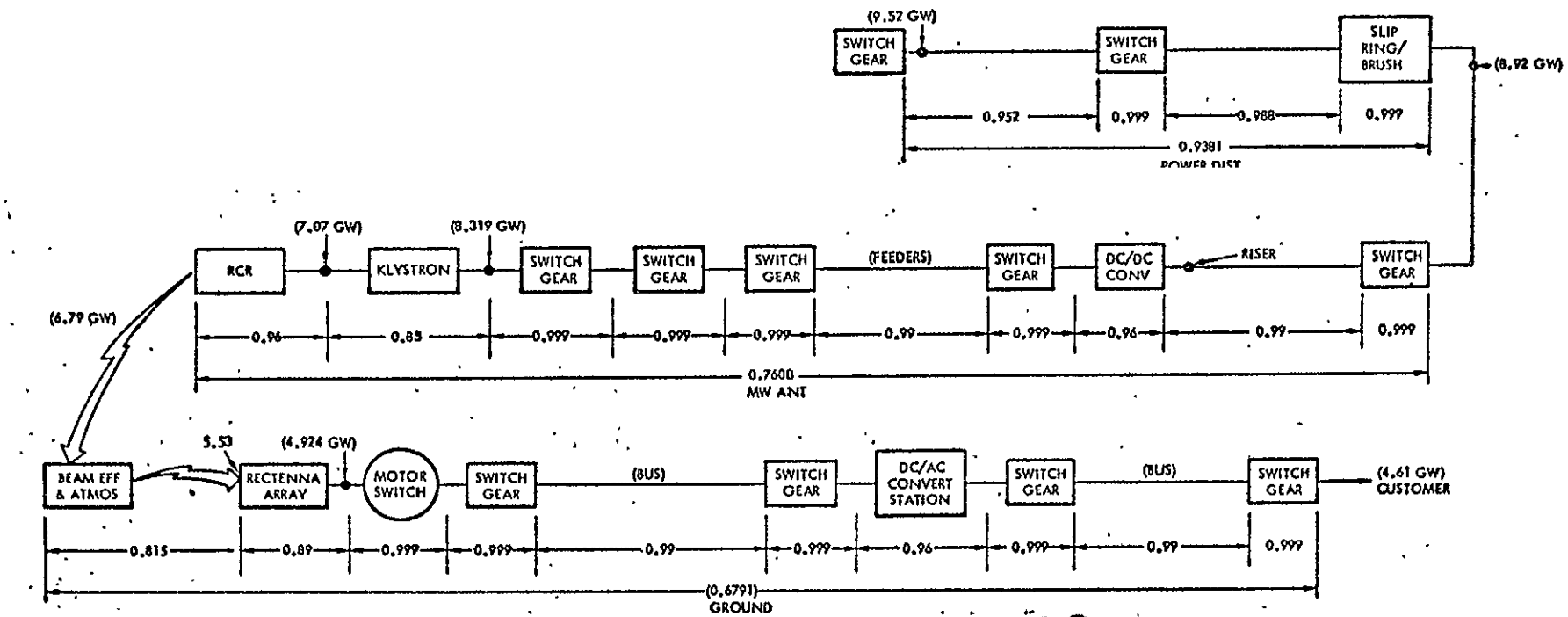

= POWER GEN. X POWER DIST. X MW ANT. X GROUND
(13.35%) (93.81%) (76.08%) (67.91%)
6.47%
(5.6% BASED ON TOTAL INTERCEPTED AREA)

$\eta_{SG} = .999^{14} = .986$
NOTE $.995^{14} = .932$

ORIGINAL PAGE IS OF POOR QUALITY

SYSTEM SIZING SUMMARY

This chart presents a summary of the considerations that affect the satellite sizing model. A major area of concern is definition of the space environment for 30 years GEO satellite operation. The selection of a solar flare model and interpretation of proton particles with energy less than 10 Mev can impact definition of equivalent 1 Mev electron fluence levels by at least one order of magnitude. The importance of this could greatly be minimized if solar cell annealing out of radiation damage can be verified. A technology program is recommended to resolve the issue of solar cell annealing and establish annealing characteristics. The summary is self-explanatory.

SYSTEM SIZING SUMMARY

- SEASONAL POWER VARIATIONS (EXCESS POWER) SHOULD BE INCLUDED IN DESIGN CRITERIA
- 30 YEAR EOL REFLECTIVITY 0.827 IS A REASONABLE DESIGN VALUE
- NEED MORE STUDY TO ESTABLISH SPS SOLAR PROTON ENVIRONMENT FOR 30-60 YEARS TIME PERIOD OF INTEREST (ROCKWELL MODEL LOOKS OK FOR FIRST CUT)
- NEED MORE TEST DATA TO DETERMINE SPACE RADIATION DEGRADATION OF 50 μM SILICON AND 25 μM GaAlAs/Al_2O_3

  NOTE: TECHNOLOGY PROGRAM IS REQUIRED AND HAS TO INCLUDE ANNEALING CHARACTERISTICS
- EFFICIENCY CHAIN IS DYNAMIC AND REQUIRES CONTINUING UPDATE

ORIGINAL PAGE IS OF POOR QUALITY

SOLAR ARRAY DIMENSIONS

This chart depicts the Rockwell configuration for center mounted antenna. It is a 3 bay by 10 bay configuration, 3900 m wide × 17,900 m long. The solar array panel is 600 m wide × 750 m long. Two of these panels make up a voltage string (45.7 kV). The 600 m width consists of 24 rolls each 25 meters wide. The solar array design factors are given. Sizing of the array is based on the solar constant at summer solstice (1319.5 W/m^2), an end of life concentration ratio of 1.83, an operating temperature of 113 C and the design factors listed in the table. A design margin factor of .975 is retained to match available area of 27×10^6 m^2. The total power at the array output is 9.52 GW.

SOLAR ARRAY DIMENSIONS

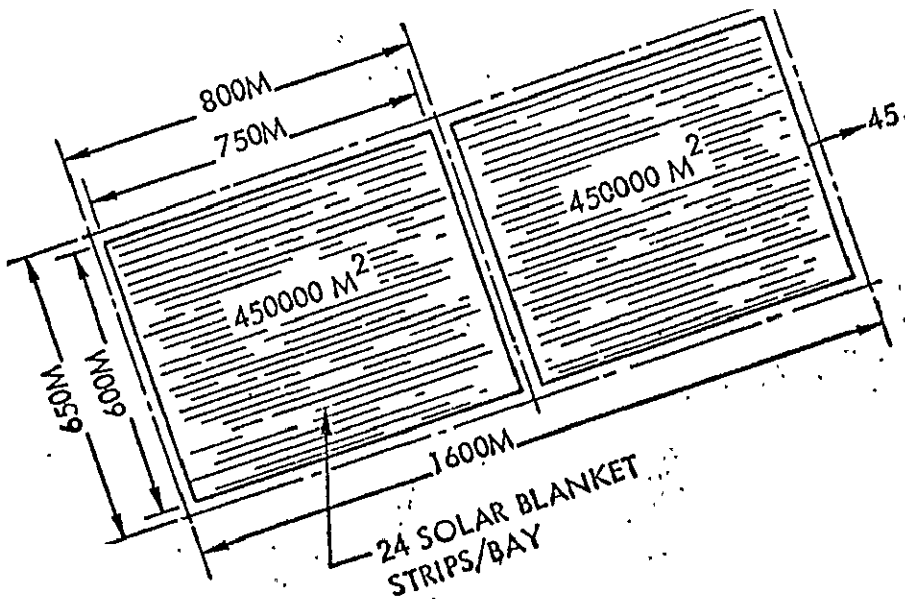

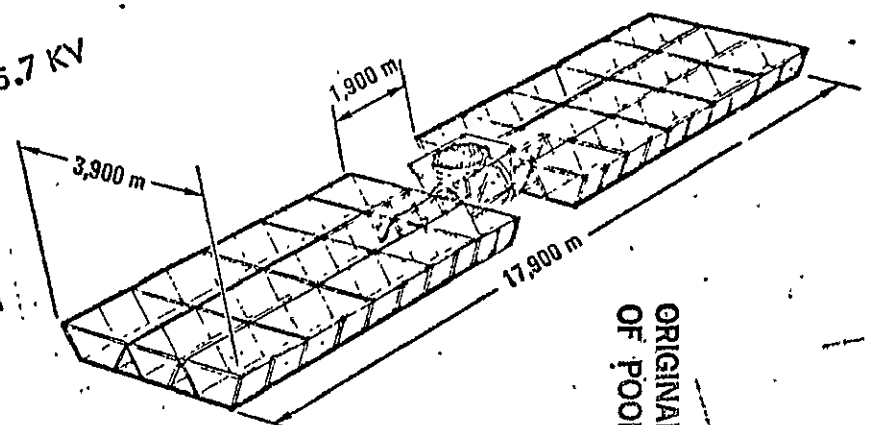

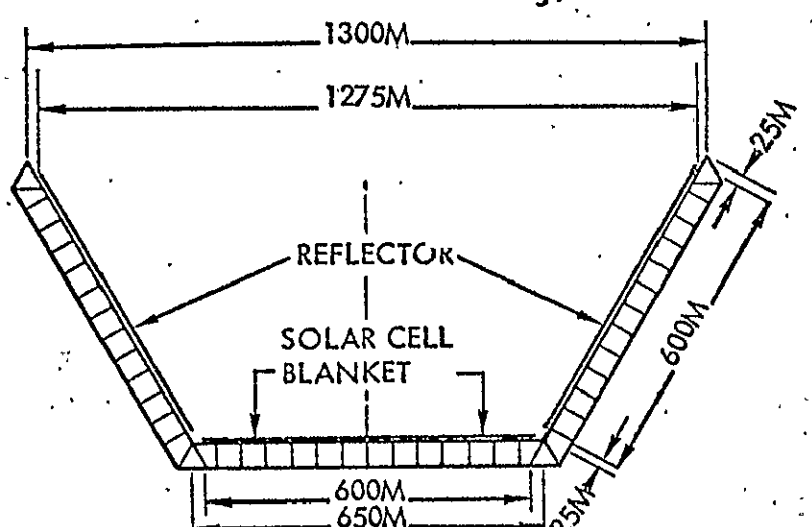

ORIGINAL PAGE IS OF POOR QUALITY

SOLAR ARRAY DESIGN FACTORS

SOLAR INPUT	1311.5 W/m^2
ENERGY ONTO CELL (CR = 1.83)	2400.1
OPERATIONS TEMPERATURE	113 C
$\eta(T)$	435.9
DESIGN FACTOR (.89)	387.9
SEASONAL FACTOR (.968)	375.5
DEGRAD. FACTOR (.96)	360.5
SG FACTOR (.997)	359.4
MARGIN (.981)	352.6

SOLAR ARRAY PWR. OUTPUT = 352.6 W/m^2 X 27.0 (10^6) m^2
= 9.52 GW

SOLAR ARRAY CONFIGURATION - TYPICAL SEGMENT (1 OF 30)

This chart illustrates the electrical flow diagram of a typical solar cell bay. Switching devices ① through ③ operate the satellite power system. These devices may be used as switching devices or fault isolation. Switching device ⑤ used to regulate the voltage output of the array. The power network is entirely under the control of the on-board data processing system. Switching device ④ is the final switchgear of the solar cell bay at the summing bus. This device may incorporate current overload detection. The device may be used to isolate the bay and may not be incorporated in the data processing system. The outputs of the bays are routed to the appropriate summing bus and slip ring pair.

SOLAR ARRAY CONFIGURATION - TYPICAL SEGMENT (1 OF 30)

ORIGINAL PAGE IS
OF POOR QUALITY

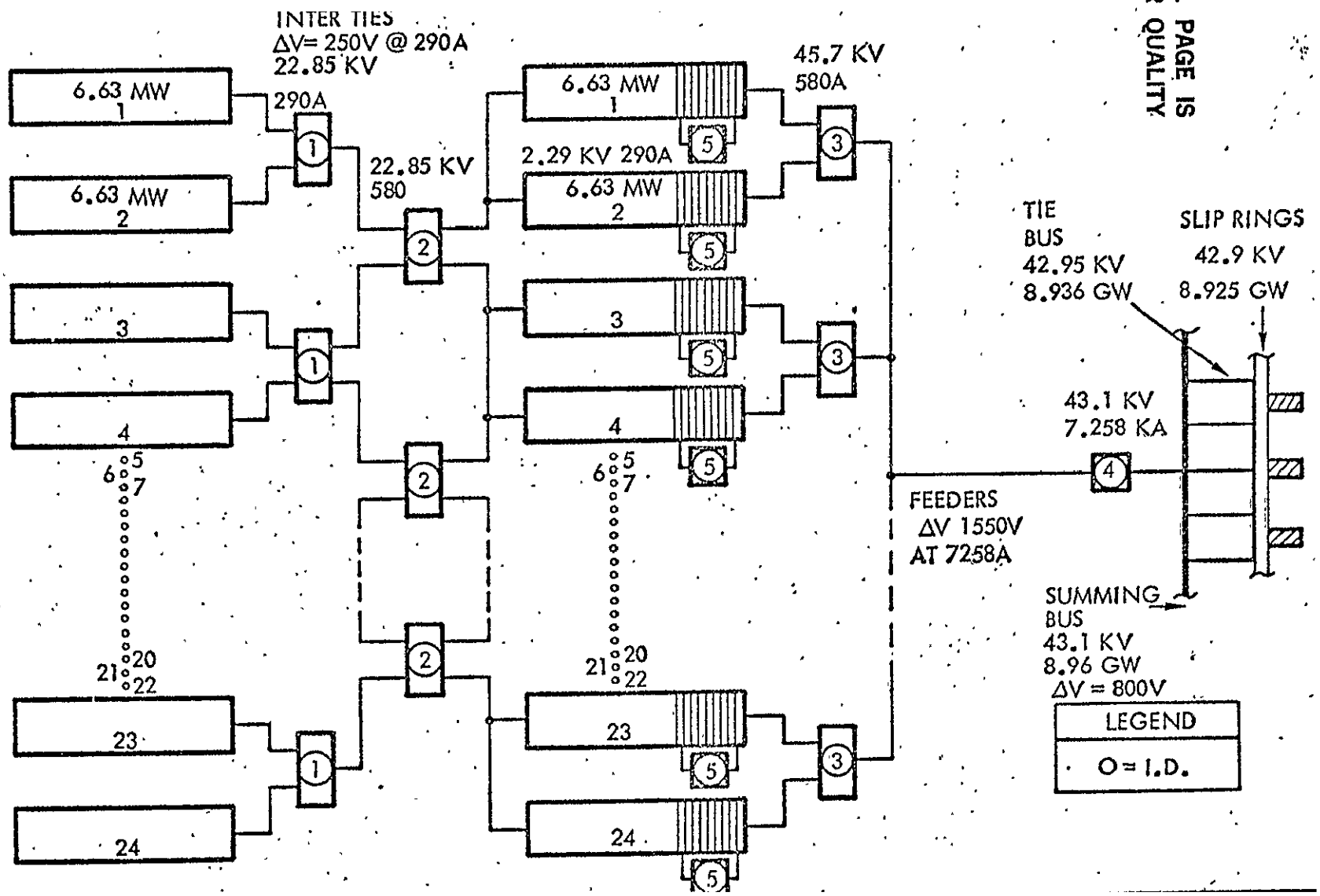

118PD132832

PDS SIMPLIFIED BLOCK DIAGRAM

This chart shows a simplified SPS power distribution system for the solar photovoltaic three trough-end mounted antenna concept. The distribution system consists of the solar array interties, main feeders, switchgears, summing busses, tie busses, slip rings, regulators, high and low dc-dc converters, battery charging system, array subsystem bus, and subsystem cabling. The interties transfers the power from the solar array to the main feeders. The on-board data processing system performs the required switching of the submodules to maintain the bus regulation as required for the satellite power system. The power from the main feeders is transferred to a split summing bus via switchgear. Tie busses then connect the summing busses to the slip rings. A split summing bus and two sets of slip rings gives redundancy on the antenna in case of a partial power failure on the array. Individual klystron dc voltage conversion is performed by centralized converters (one for each brush assembly). A battery and battery charging system is for partial power to keep the klystrons warm and required housekeeping tasks during the eclipse periods.

PDS SIMPLIFIED BLOCK DIAGRAM

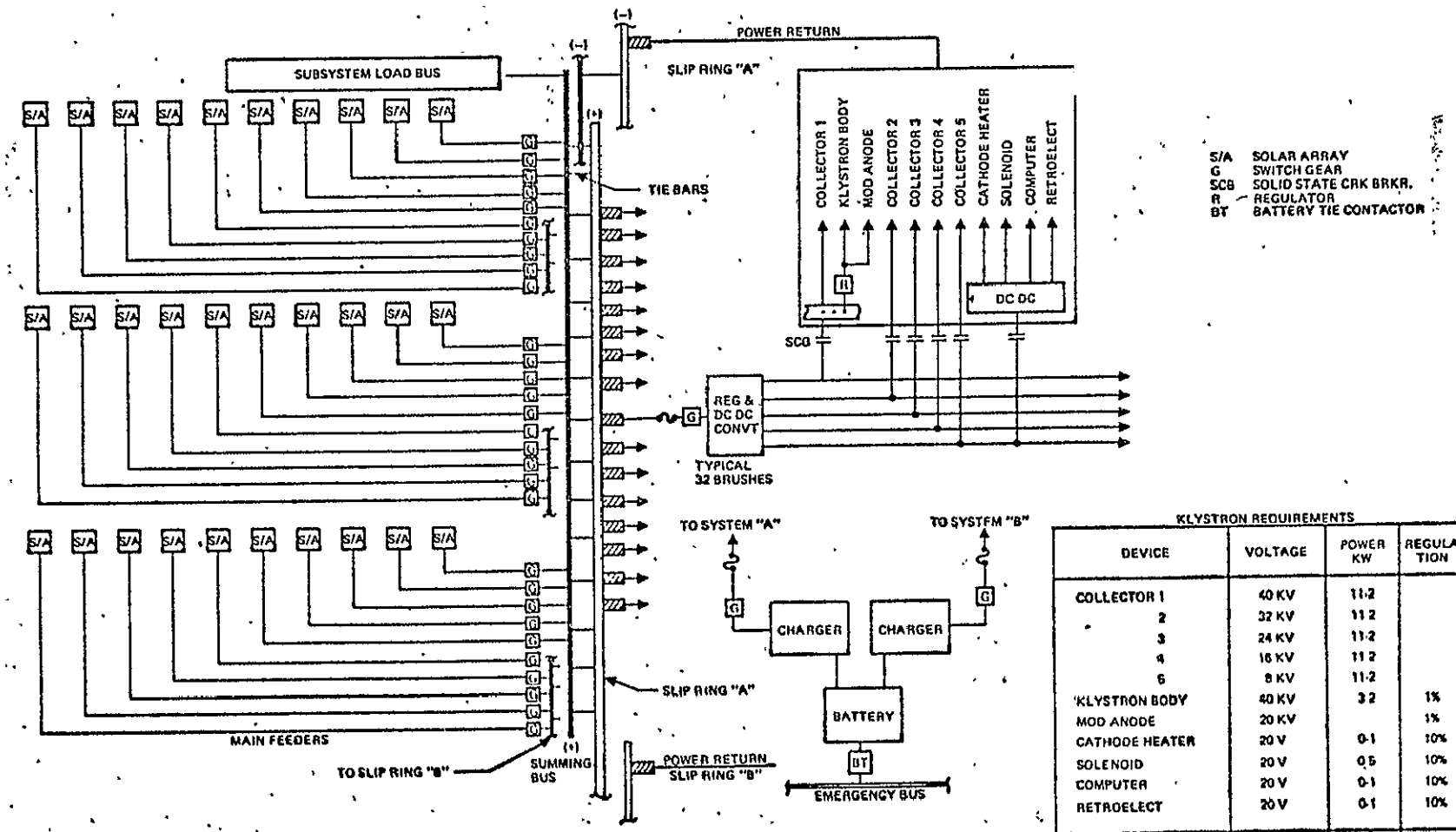

KLYSTRON REQUIREMENTS

DEVICE	VOLTAGE	POWER KW	REGULATION
COLLECTOR 1	40 KV	11.2	
2	32 KV	11.2	
3	24 KV	11.2	
4	16 KV	11.2	
5	8 KV	11.2	
KLYSTRON BODY	40 KV	3.2	1%
MOD ANODE	20 KV		1%
CATHODE HEATER	20 V	0.1	10%
SOLENOID	20 V	0.5	10%
COMPUTER	20 V	0.1	10%
RETROELECT	20 V	0.1	10%
TOTAL		59.8	

MICROWAVE ANTENNA—POWER DISTRIBUTION

The rotating elements of the power distribution system consist of the slip ring brushes, the power risers and dc-dc converters, the secondary feeders, and the dc-RF converters (klystrons). The distribution concept selected permits full operational capability with almost any single failure. For example, riser or dc-dc converter failures are overcome by oversizing of buses and converters; permitting increased current loads on remaining functional paths; secondary bus failures are overcome by providing secondary power paths for every mechanical module; etc.

The chart identifies the power/current levels (maximum) required at every switching point. Also shown is the emergency bus and energy storage subsystem required to maintain powered status for supporting subsystems and klystron filaments during periods of solar eclipse.

MICROWAVE ANTENNA - POWER DISTRIBUTION

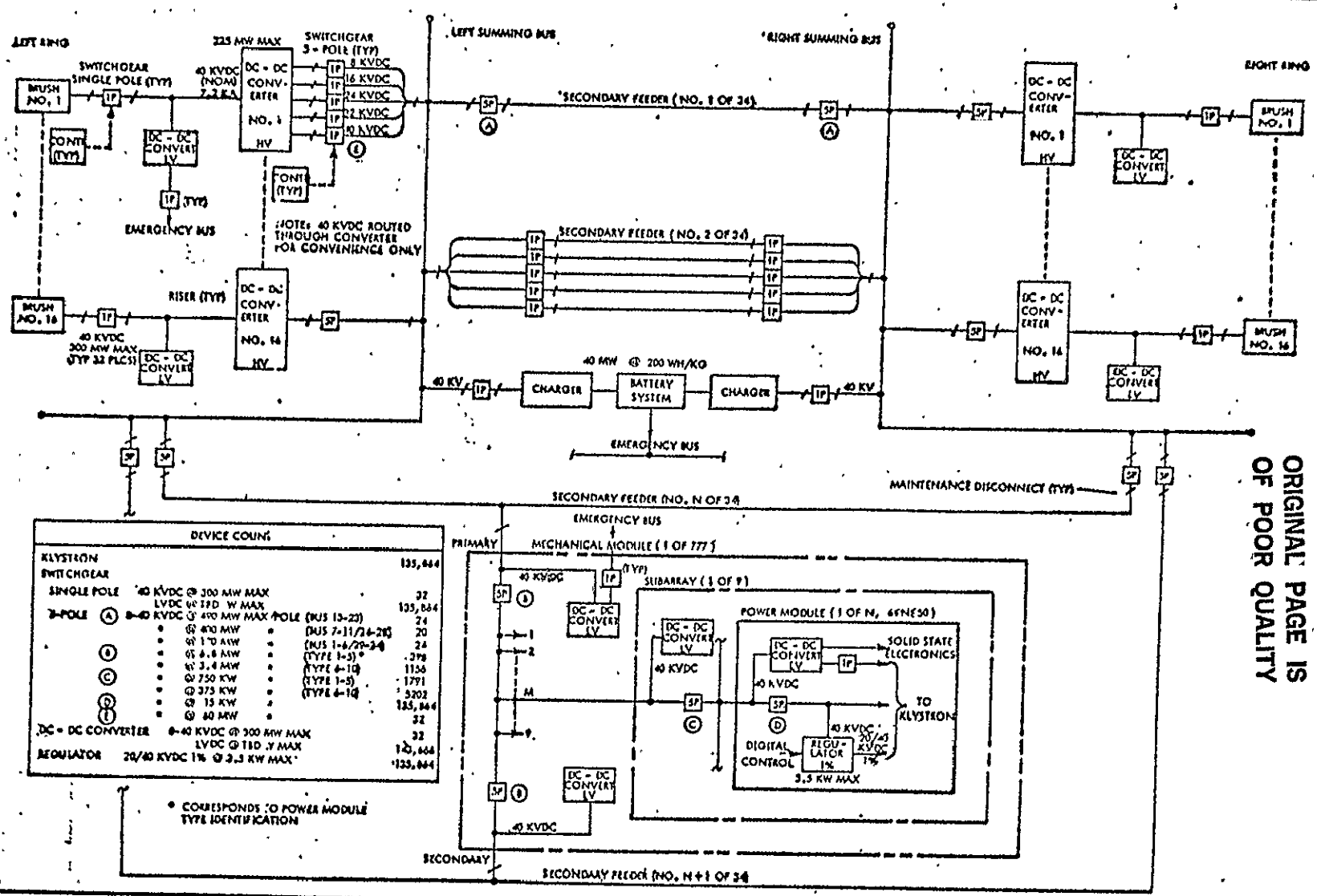

DEVICE COUNT			
KLYSTRON			135,864
SWITCHGEAR			
SINGLE POLE	40 KVDC @ 300 MW MAX		32
	LVDC @ TBD W MAX		135,864
3-POLE (A)	8-40 KVDC @ 450 MW MAX/POLE	(BUS 13-23)	24
	@ 450 MW	(BUS 7-11/26-28)	20
	@ 1.70 MW	(BUS 1-6/29-34)	24
(B)	@ 6.6 MW	(TYPE 1-5)	298
	@ 3.4 MW	(TYPE 6-10)	1156
(C)	@ 750 KW	(TYPE 1-5)	1791
	@ 375 KW	(TYPE 6-10)	5202
(D)	@ 15 KW		135,864
(E)	@ 60 MW		32
DC - DC CONVERTER	8-40 KVDC @ 300 MW MAX		32
	LVDC @ TBD W MAX		135,864
REGULATOR	20/40 KVDC 1% @ 3.5 KW MAX*		135,864

* CORRESPONDS TO POWER MODULE TYPE IDENTIFICATION

ORIGINAL PAGE IS OF POOR QUALITY

SOLAR PHOTOVOLTAIC POWER CONVERSION MASS STATEMENT - ~10° kg
END MOUNTED ANTENNA

Collector Array

The structure and mechanism weight of 1.122×10^6 kg (-0.138×10^6 kg) is the result of reduction in secondary structure allowance in the power distribution subsystem.

The power source weight of 7.855×10^6 kg (-0.585×10^6 kg)* is the result of size reduction by the reduction of required power from 10.3 GW to 9.51 GW.

The power distribution and control weight of $.872\times10^6$ kg (-1.731×10^6 kg) is the result of a complete new analysis of conductor and conditioning equipment requirements associated with the center mounted antenna (essentially shorter conductor lengths.

There were no changes in the weight of the attitude control or information management systems.

It should be noted that this mass statement is based on delivering 4.61 GW at the utility interface (9.51 GW solar array output).

*Compared to 2nd Quarter

SOLAR PHOTOVOLTAIC POWER CONVERSION MASS STATEMENT (~10^0 KG) — CO-PLANAR (3-TROUGH)

SUBSYSTEM	ANTENNA MOUNT END 3RD QUARTER DEC 6-7, 1978	ANTENNA MOUNT CENTER 4TH QUARTER MAR 21, 1979
COLLECTOR ARRAY		
STRUCTURE AND MECHANISMS	(1.260)	(1.122)
PRIMARY STRUCTURE	0.702	0.702
SECONDARY STRUCTURE	0.358	0.187
MECHANISM	0.200	0.233
ATTITUDE CONTROL	(0.116)	(0.116)
POWER SOURCE	(7.855)	(7.855)
SOLAR PANELS	6.818	6.818
SOLAR REFLECTORS	1.037	1.037
POWER DISTRIBUTION AND CONTROL	(2.603)	(0.872)
POWER CONDITIONING EQUIPMENT	[0.193]	[0.193]
POWER DISTRIBUTION	[2.410]	[0.679
CONDUCTORS AND INSULATION	2.367	0.646
SLIP RINGS	0.043	0.043
INFORMATION MANAGEMENT & CONTROL	(0.050)	(0.050)
DATA PROCESSING	0.021	0.021
INSTRUMENTATION	0.029	0.029
TOTAL ARRAY (DRY)	11.887	10.015

ORIGINAL PAGE IS OF POOR QUALITY

SOLAR PHOTOVOLTAIC POWER CONVERSION MASS STATEMENT – ~10^6 kg (CONT.)
END MOUNTED ANTENNA

Antenna Section

The antenna structure and mechanism weight of 0.977×10^6 kg was the result of calculated weights from a layout drawing of the gimbal structure and re-sizing of the actual antenna itself.

The power distribution and control weight of 4.505×10^6 was the result of a new analysis of the system.

The center mounted antenna configuration results in a mass savings of 2.336×10^6 when compared to an end mounted antenna configuration.

SOLAR PHOTOVOLTAIC POWER CONVERSION MASS STATEMENT ($\sim 10^6$ KG) —CO-PLANAR (3-TROUGH) (Cont.)

SUBSYSTEM	ANTENNA MOUNT END 3RD QUARTER DEC 6-7, 1978	ANTENNA MOUNT CENTER 4TH QUARTER MAR 21, 1979
ANTENNA SECTION		
STRUCTURE AND MECHANISM	(0.977)	(0.977)
PRIMARY STRUCTURE	0.120	0.120
SECONDARY STRUCTURE	0.599	0.599
ANTENNA	0.067	0.067
MECHANISM	0.191	0.191
THERMAL CONTROL	(1.408)	(1.408)
KLYSTRON COOLING	0.851	0.851
INSULATION	0.557	0.557
RADIATOR	—	—
MICROWAVE POWER	(7.012)	(7.012)
KLYSTRONS	4.250	4.250
ATT. SEN. ELECTRONICS & PHASE CONTROL	0.142	0.142
WAVEGUIDES	2.620	2.620
POWER DISTRIBUTION AND CONTROL	(4.505)	(4.505)
POWER CONDITIONING EQUIPMENT	[1.901]	[1.901]
POWER DISTRIBUTION	[2.604]	[2.604]
CONDUCTOR & INSULATION	2.587	2.587
SLIP RING BRUSHES	0.017	0.017
INFORMATION MANAGEMENT AND CONTROL	(0.630)	(0.630)
DATA PROCESSING	0.380	0.380
INSTRUMENTATION	0.250	0.250
TOTAL ANTENNA SECTION	14.532	14.532
TOTAL SPS (DRY)	26.416	24.547
GROWTH, 25%	6.604	6.137
TOTAL SPS (DRY) WITH GROWTH	33.02	30.684

ORIGINAL PAGE IS OF POOR QUALITY

POWER DISTRIBUTION TECHNOLOGY SUMMARY

This chart shows the two key system recommendations for power distribution technology advancement. The SPS concept as currently defined is very dependent upon the development of high power, voltage, and efficiency (at extremely light weight) dc converters and switchgear. The specific weights of dc converters are presently close to an order of magnitude greater than desired. An immediate technology program is recommended to establish a basis for extrapolation to the SPS satellite converter weights. Switchgear technology status based on terrestrial components appear supportive of the weight and efficiency goals of SPS. A need is obvious to validate this technology applied to SPS space application.

POWER DISTRIBUTION TECHNOLOGY SUMMARY

- LIGHTWEIGHT DC CONVERTER IMPORTANT TO SPS (SATELLITE SYSTEM & EOTV)
  - ROCKWELL CONCEPT UTILIZES 0.1971 KG/KW SPECIFIC WEIGHT—TECHNOLOGY EXTRAPOLATION BELOW 0.59 KG/KW <u>HIGH RISK!</u>
  - NEED TECHNOLOGY PROGRAM TO EXTEND WEIGHT PROJECTIONS
- END-TO-END EFFICIENCY CHAIN VERY SENSITIVE TO SWITCH GEAR COMPONENT EFFICIENCY (14 S.G. IN SERIES)
  - S.G. WEIGHT & EFFICIENCY GOALS (0.99682 KG/KW & 99.9%) APPEAR ACHIEVABLE
  - NEED TECHNOLOGY PROGRAM TO VALIDATE SWITCH GEAR CONCEPT IN TERMS OF SPACE APPLICATION (SPS)

ORIGINAL PAGE IS OF POOR QUALITY

REFERENCE SATELLITE CONFIGURATION CHARACTERISTICS

The next four charts summarize reference satellite configuration characteristics taken from the Reference System Report, United States Department of Energy and the National Aeronautical and Space Administration, October 1978. Matched against these reference characteristics are the major Rockwell study alternatives. The reference characteristics are grouped into three levels: (I) Basic - top level characteristics which are solidly established and rarely subjected to a change; (II) System - derived characteristics (primarily physical descriptions) from the selected subsystem point designs; and (III) Subsystem - selected subsystem physical and performance characteristics subject to change dependent upon current trade off evaluations.

The current Rockwell point design is sized to deliver 4.61 Gigawatts to the utility interface. This is being recommended along with alternative configurations, e.g., 3 trough planar array with a center mounted antenna. Planform, solar array blanket area, reflector area and weight are derived from sizing parameters such as overall efficiency.

REFERENCE SATELLITE CONFIGURATION CHARACTERISTICS

LEVEL	PARAMETER	NASA/DOE REFERENCE CHARACTERISTICS	RI CONCEPT CHANGE
I BASIC	FREQUENCY	2.45 GHz	
	POWER DENSITY	23 MW/CM^2 (RECT. CENTER) 1 MW/CM^2 (RECT. EDGE)	
	CONSTRUCTION LOCATION	GEO	
	OPERATIONAL ORBIT	GEO	
	TRANSMISSION TECHNIQUE	MICROWAVE	
	PHOTOVOLTAIC TECHNIQUE	GaAlAs SOLAR CELLS, CR = 2 Si SOLAR CELLS, CR = 1	
II SYSTEM	PWR @ UTILITIES INTERF.	5.0 GW	4.61 GW
	SOLAR ARRAY CONFIG.	PLANAR	
	NUMBER OF TROUGHS	5 (GaAs)	3
	ANTENNA MOUNT	END	CENTER
	PLAN FORM	55.13 KM^2 (GaAs) 54.08 KM^2 (Si)	62.4 KM^2 65.5 KM^2
	SOLAR BLANKET AREA	26.52 KM^2 (GaAs) 52.34 KM^2 (Si)	27.0 KM^2 56.3 KM^2
	REFLECTOR AREA	53.04 KM^2 (GaAs)	54.0 KM^2
	OVERALL EFFICIENCY	6.97% (GaAs) 7.0% (Si)	6.47% 6.18%
	WEIGHT	34.16×10^6 KG (GaAs) 50.98×10^6 KG (Si)	30.68×10^6 KG 52.46×10^6 KG

REFERENCE SATELLITE CONFIGURATION CHARACTERISTICS (CONT.)

LEVEL	PARAMETER	NASA/DOE REFERENCE CHARACTERISTICS	RI CONCEPT CHANGE
II SYSTEM (CONT.)	HLLV	2-STG, V-LAUNCH, SEQ. BURN, HORIZ. LAND, WINGED, REUSABLE, 425 MT TO LEO	PARALLEL BURN 227 MT TO LEO
	COTV	INDEPENDENT, REUSABLE, ELECTRIC ENGINE-POWERED	
	PLV	MODIFIED SPACE SHUTTLE ORBITER	
	POTV	2-STAGE, REUSABLE, CHEM. FUEL	
III SUBSYSTEM	POWER CONVER./DISTRIB.		
	GaAs—BLANKET MATERIAL	KAPTON (25 μM)	
	CELL THICKNESS	25 μM	
	CELL SUBSTRATE	SYNTHETIC SAPPHIRE (INVERSE ORIENTATION)	
	BOL CELL EFFICIENCY	20% (AMO, 28 C)	
	OPS TEMPERATURE	113 C (η = 18.15%)	
	BLANKET WEIGHT	0.252 KG/M^2	
	REFLECTOR MATERIAL	AL-KAPTON (12.5 μM)	
	BLANKET STOWAGE	ROLL-UP	
	REFLECTOR STOWAGE	ACCORDIAN-FOLD & ROLL-UP	
	PROJECTED COST	\$71/M^2 (SOLAR BLANKET)	
	Si—CELL THICKNESS	50 μM	
	BOL CELL EFFICIENCY	17.3% (AMO, 28 C)	
	OPS TEMPERATURE	36.5 C (η = 15.6%	
	ANNEALING ASSUMPTION	INDUCED (CO_2 LASER 500 C)	

PRECEDING PAGE BLANK NOT FILMED

REFERENCE SATELLITE CONFIGURATION CHARACTERISTICS (CONT.)

LEVEL	PARAMETER	NASA/DOE REFERENCE CHARACTERISTICS	RI CONCEPT CHANGE
III SUBSYSTEM (CONT.)	Si—PROJECTED COST	$35/M^2 (SOLAR BLANKET)	
	COVER	BOROSILICATE, 75 μM ELECTRICALLY BONDED (FRONT & BACK)	
	INTERCONNECTS	SILVER-PLATED COPPER (12.5 μM)	
	STOWAGE	ROLL-UP OR FOLDED	
	ARRAY OUTPUT VOLTAGE	40 TO 50 KV	
	CONDUCTORS	ALUMINUM	
	POWER TRANSFER (ROT. JOINT)	SLIP RINGS/BRUSHES	
	STRUCTURES		
	GEN. CONSTRUCTION MATERIAL	GRAPHITE COMPOSITES	
	ANTENNA CONFIGURATION	SPACE FRAME	
	ANTENNA PRIMARY STRUCTURE	OPEN TRUSS, AUTOMATIC, FAB. IN SPACE (130 M DEEP)	
	ANTENNA SECONDARY STRUCTURE	DEPLOY. CUBIC TRUSS (9.93 M DEEP)	
	ROTARY JOINT	350 METERS DIAMETER	
	SLOTTED WAVEGUIDES	ALUMINUM	
	KLYSTRON INSTALLATION	BACKSIDE OF ANTENNA	
	ATT. CONTR. & STA. KEEPING		
	OPERATIONS	X-POP (LONG AXIS ⊥ ORBIT PLANE)	
	ANTENNA POINTING	CMG's	
	RCS—THRUSTER TYPE	ARGON ION BOMBARDMENT	
	THRUSTER GIMBAL	INDIVIDUALLY	
	NO. OF THRUSTERS	64 (16 PER CORNER)	
	GRID LIFETIME	5000 HOURS	
	MTBF	5 YEARS	
	AVERAGE POWER	34 MEGAWATTS	
	SPECIFIC IMPULSE	13,000 SEC	
	THRUST	13 N	
	PROPELLANT STORAGE	CRYOGENIC	

PRECEDING PAGE BLANK NOT FILMED.

REFERENCE SATELLITE CONFIGURATION CHARACTERISTICS (CONT.)

LEVEL	PARAMETER	NASA/DOE REFERENCE CHARACTERISTICS	RI CONCEPT CHANGES
III SUBSYSTEM (CONT.)	MICROWAVE		
	MICROWAVE CONVERTER	KLYSTRON	
	MICROWAVE BEAM	10 dB EDGE TAPER GAUSSIAN (88% RADIATING ENERGY WITHIN 5 KM RADIUS ⊥ BORESIGHT)	
	BEAM WIDTH	1.2 ARC MINUTES	
	AMPLITUDE TOLERANCE	±1 dB ACROSS SUBARRAY	
	ANT./SUBARRAY MECH. ALIGNMENT	±3 ARC MINUTES (GRATING LOBE CONSTRAINED TO ≤ 0.01 MW/CM^2)	
	NO. OF SUBARRAYS	7220 (10×10 M)	6993 (10.2×11.64 M)
	NO. OF POWER TUBES	36 PER SUBARRAY AT CENTER 4 PER SUBARRAY AT EDGE 101,552 TOTAL	50 6 135,864 TOTAL
	POWER PER TUBE	70 KW	50 KW
	FIRST SIDE LOBE	0.08 MW/CM^2	
	GRATING LOBES	<0.01 MW/CM^2	
	ERROR BUDGET—TOTAL RMS Ø ERROR	10°	
	—MAX BEAM Ø ERROR AT EDGE OF TRANSMIT ARRAY	2°	
	POWER RADIATED (TRANSMIT ARRAY)	6.72 GW	6.79 GW
	THERMAL LIMITS (ANTENNA)	22 KW/M^2	21 KW/M^2
	MPTS EFFICIENCY	63%	61.4%
	RECTENNA PANELS	MULTIPLE ELEMENTS FEEDING SINGLE DIODES OPEN-FACED	(STRIPLINE) OPAQUE

ORIGINAL PAGE IS OF POOR QUALITY

PRECEDING PAGE BLANK NOT FILMED

THE SP*/SPS CONCEPT
(*SANDWICH PANEL)

The concept of an SP/SPS is based on the use of advanced technology solid-state amplifiers and GaAs solar cells. In order to circumvent the mass penalties, efficiency losses and development risks associated with power distribution and control, the solar cells would be placed directly in contact with the solid state amplifiers as shown; thus, the name "Sandwich Panel." Conversion of light to RF energy would be accomplished through an estimated panel thickness of between 1 to 5 inches, depending on radiator design and thermal considerations. The most direct design approach is to constrain the solar cell blanket area to a size equivalent to the transmitting antenna area and employing a transmitting aperture with uniform illumination. In the material to follow, these constraints apply.

THE SP*/SPS CONCEPT
(*Sandwich Panel)

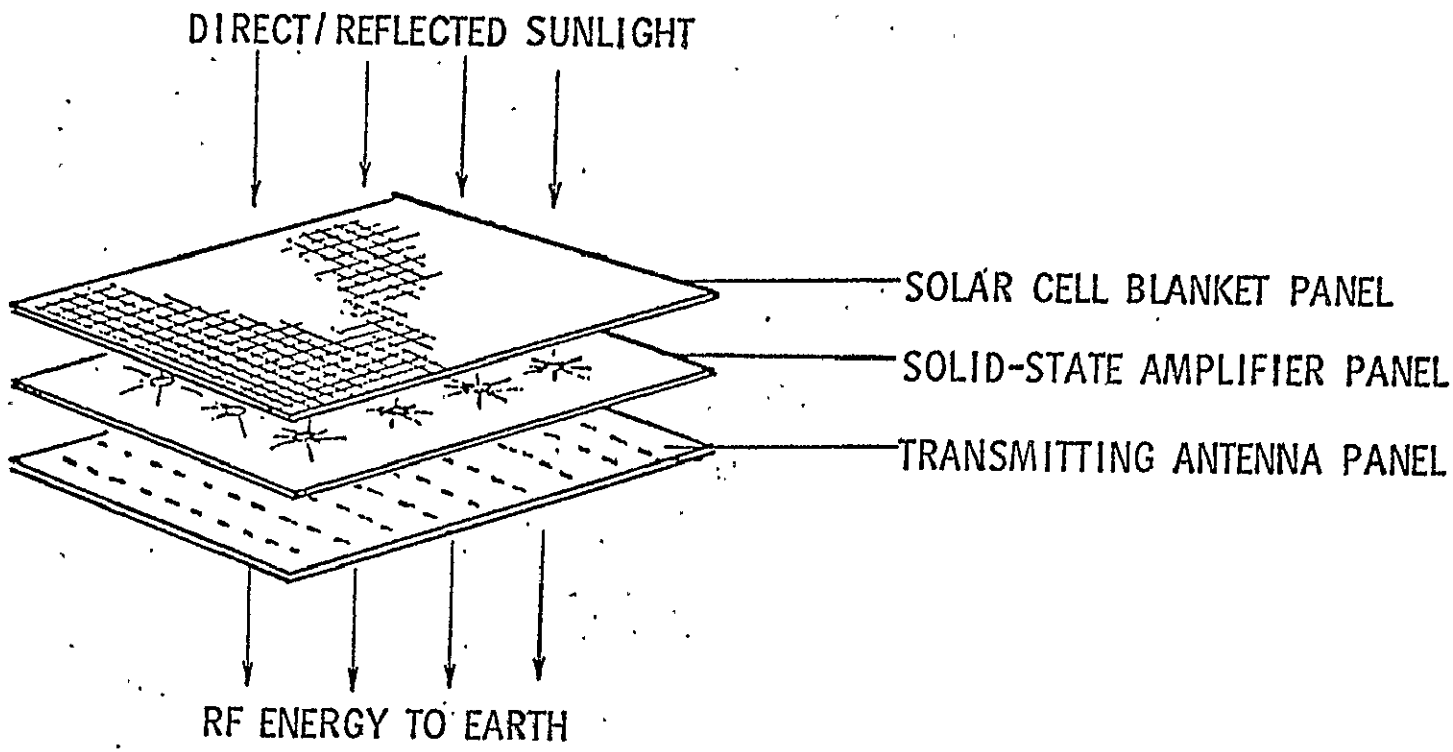

- Initial design constraint: solar cell area $\leq$ trans. antenna area

ORIGINAL PAGE IS
OF POOR QUALITY

SP/SPS CONCEPT R-4B

The SP/SPS configuration shown uses a double set of flat mirrors to reflect sunlight to the solar cells of the Sandwich Panel. The three secondary reflectors and the SP are fixed in Earth equatorial space. The single primary reflector is always sun-oriented requiring a daily rotation of 360° and an annual "tilt" of plus-and-minus 11.75°. For the concept shown, an average annual effective concentration ratio of just under 2 was achieved. This resulted in an SP diameter of 2.181 kilometers and power delivered to the utility interface of 816 megawatts. Methods for computing these values will be shown.

SP/SPS CONCEPT R-4B

SIDE VIEW

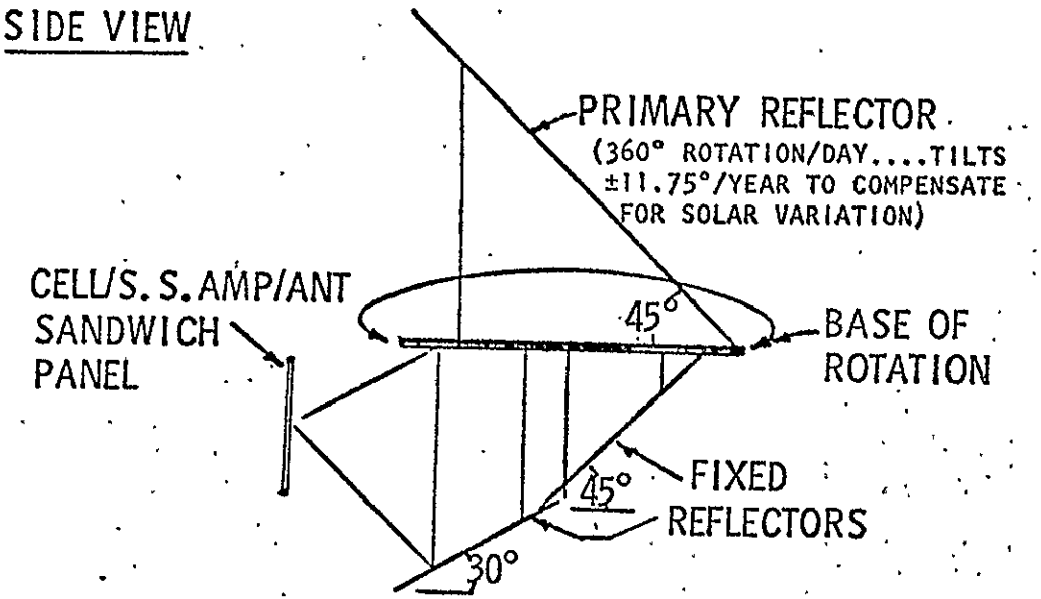

PLAN VIEW

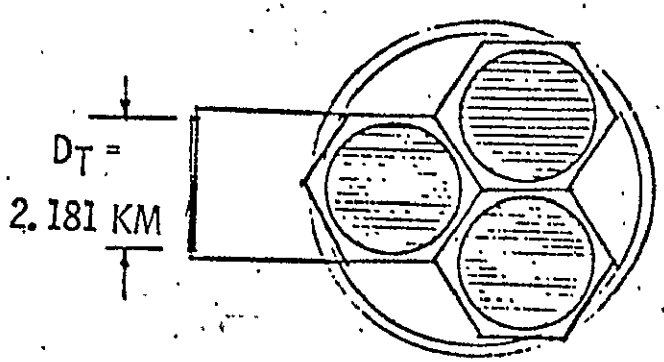

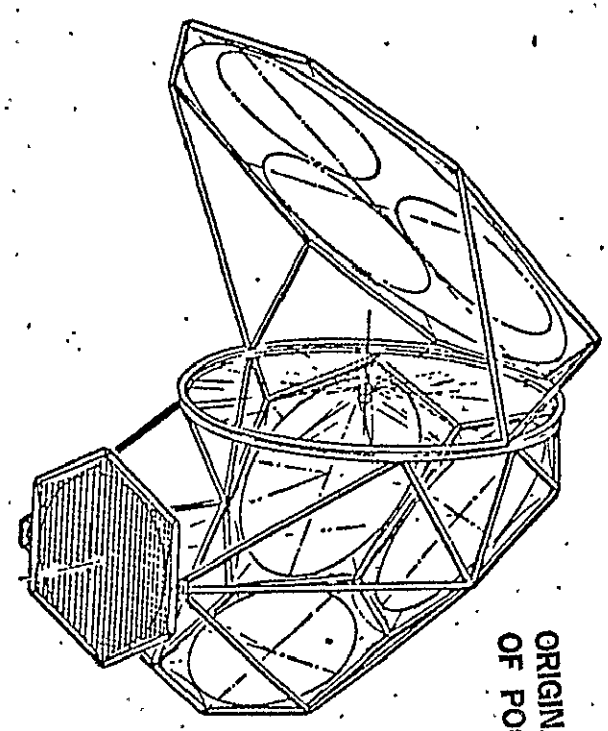

- P_T = 1237 MW
- P_{UI} = 816 MW

ORIGINAL PAGE IS OF POOR QUALITY

NASA/DOE REFERENCE SYSTEM EFFICIENCY CHAIN
(Modifications Shown for SP/SPS Concepts)

The efficiency chain for the NASA/DOE Reference System is shown. For calculating convenience, the chain has been grouped into three categories; the satellite's "configurational" efficiency and "fixed" efficiency, and the "rectenna" efficiency. Modifications to the Reference System's "fixed" efficiency are those dealing only with power distribution and control. The "rectenna" efficiency was downgraded to reflect the lower energy collection efficiency inherent in using a uniformly illuminated aperture. Since the SP/SPS designs will be different and varied, the "configurational" efficiency must be calculated for each concept.

NASA/DOE REFERENCE SYSTEM EFFICIENCY CHAIN
(Modifications Shown for SP/SPS Concepts)

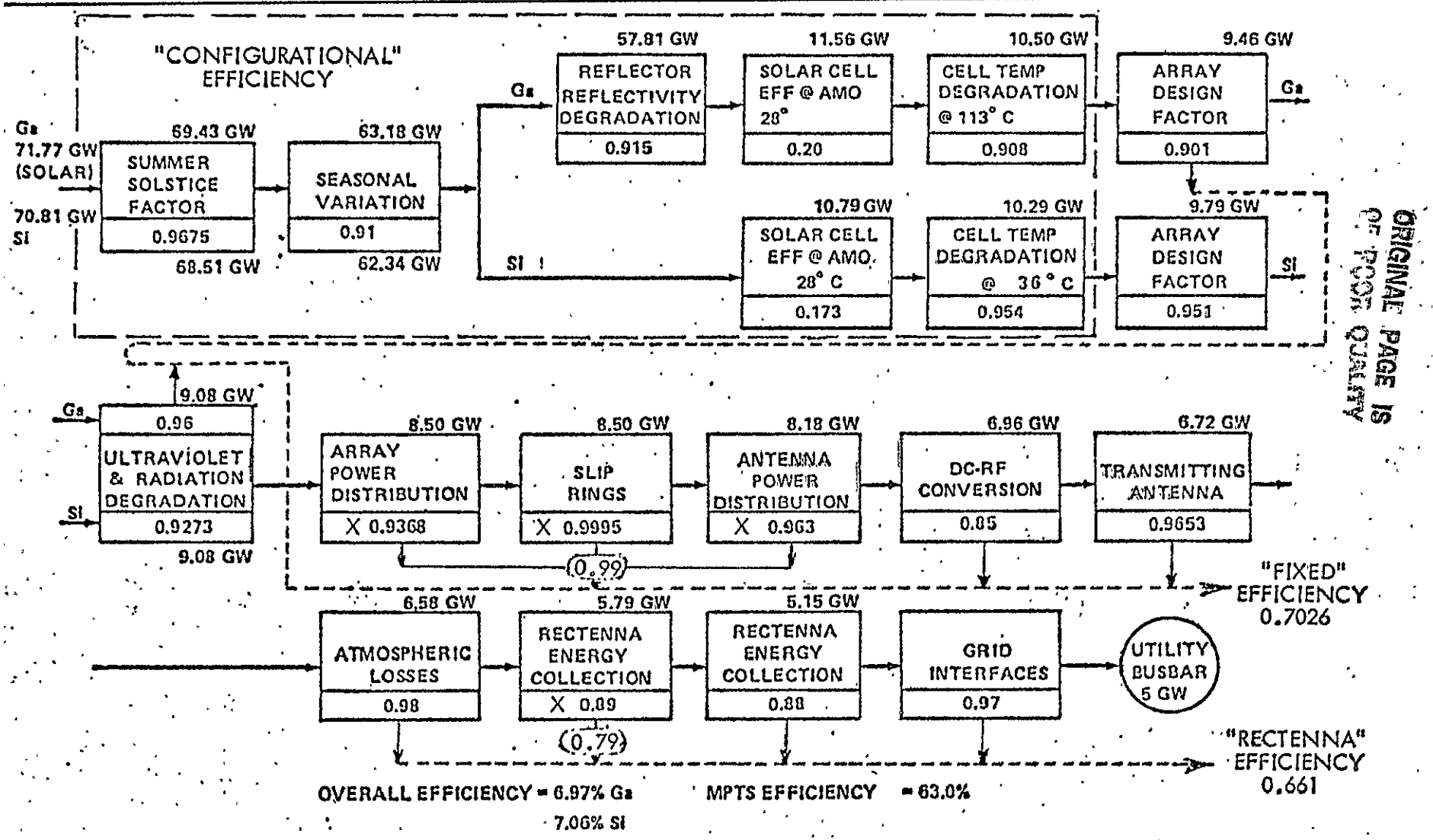

ORIGINAL PAGE IS OF POOR QUALITY

ESTIMATING CAPITAL COSTS OF SP/SPS CONCEPTS

Assuming that all sociopolitical and technological barriers can be overcome, the "bottom line" for SPS is generally understood to be its competitive position based on average unit capital costs. Shown is the recipe for estimating the capital costs of SP/SPS concepts. Abbreviated symbols that will be used in following this procedure are also introduced.

ESTIMATING CAPITAL COSTS OF SP/SPS CONCEPTS

- CALCULATE "CONFIGURATIONAL" EFFICIENCY, E_C
- MULTIPLY BY "FIXED" EFFICIENCY AND CALCULATE THE FOLLOWING:
  - POWER TRANSMITTED PER M^2 OF ANTENNA AREA, $P_{T/M^2} = 950.6\ E_c$
  - AREA OF TRANSMITTING ANTENNA, $A_T = \sqrt{\frac{4623}{P_{T/M^2}}}$
  - POWER TRANSMITTED BY SATELLITE, $P_T = A_T P_{T/M^2}$
  - REFLECTOR AREA, $A_{REF} = f\ (A_T)$
  - AREA OF RECTENNA, $A_R = \frac{57.5}{A_T}$
  - POWER OUTPUT AT UTILITY INTERFACE, $P_{UI} = 0.66\ P_T$
- USING MASS RELATIONSHIPS, CALCULATE SATELLITE MASS
- USING SYSTEM COST RELATIONSHIPS, CALCULATE THE FOLLOWING:
  - SATELLITE COSTS
  - ASSEMBLY & SUPPORT COSTS
  - TRANSPORTATION COSTS
  - RECTENNA COSTS
  - A&E, SEM AND CONTINGENCY COSTS

$$\text{CAPITAL COSTS PER KW} = \frac{\text{SYSTEM COSTS}}{P_{UI}}$$

CALCULATING CONFIGURATIONAL EFFICIENCY

The most challenging design objective of the SP/SPS concept is to achieve the highest number of "configurational" efficiency. As will be seen, this involves a trade between adding multiple reflectors to obtain a large effective concentration ratio (CR_E) and the response of the solar cells to the higher CR_E. From the equations on the previous chart one can seesee that a higher CR_E results in a smaller diameter SP yet with a greater power level delivered to the utility interface (P_{UI}). Ways to improve configurational efficiency which sould be explored are noted.

CALCULATING "CONFIGURATIONAL" EFFICIENCY

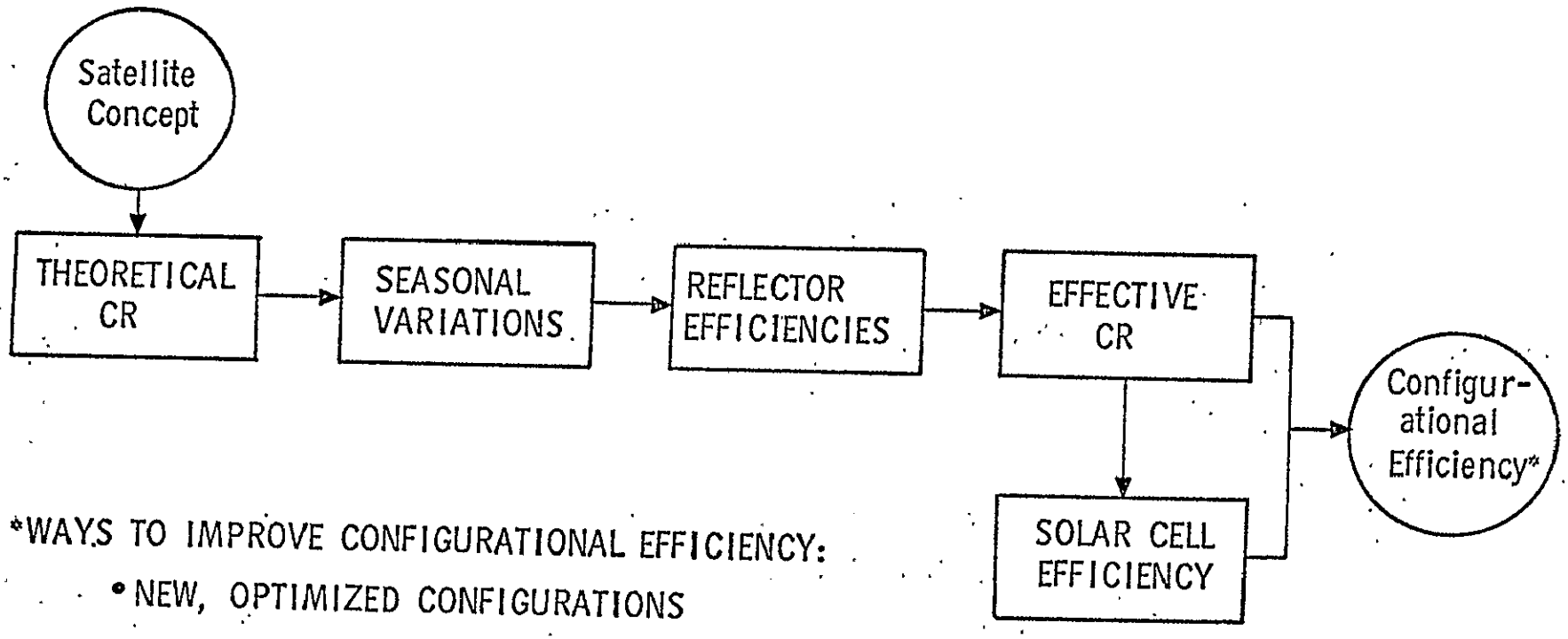

*WAYS TO IMPROVE CONFIGURATIONAL EFFICIENCY:

- NEW, OPTIMIZED CONFIGURATIONS
- HIGHER REFLECTOR EFFICIENCIES
- OPTICAL COATINGS TO REDUCE SOLAR CELL TEMPS
- MULTI-BAND GAP SOLAR CELLS

ORIGINAL PAGE IS OF POOR QUALITY

SOLAR CELL EFFICIENCY ESTIMATES FOR SP/SPS CONCEPTS

This (preliminary) plot of GaAlAs cell efficiency as a function of effective CR indicates that the simple addition of reflectors will not have an unlimited payoff. Indeed - as will be shown - there is an optimum design area beyond which systems capital costs are increased. It is emphasized that this is a preliminary working plot with no filtering techniques introduced to decrease the heat load on the cells.

SOLAR CELL EFFICIENCY ESTIMATES FOR SP/SPS CONCEPTS

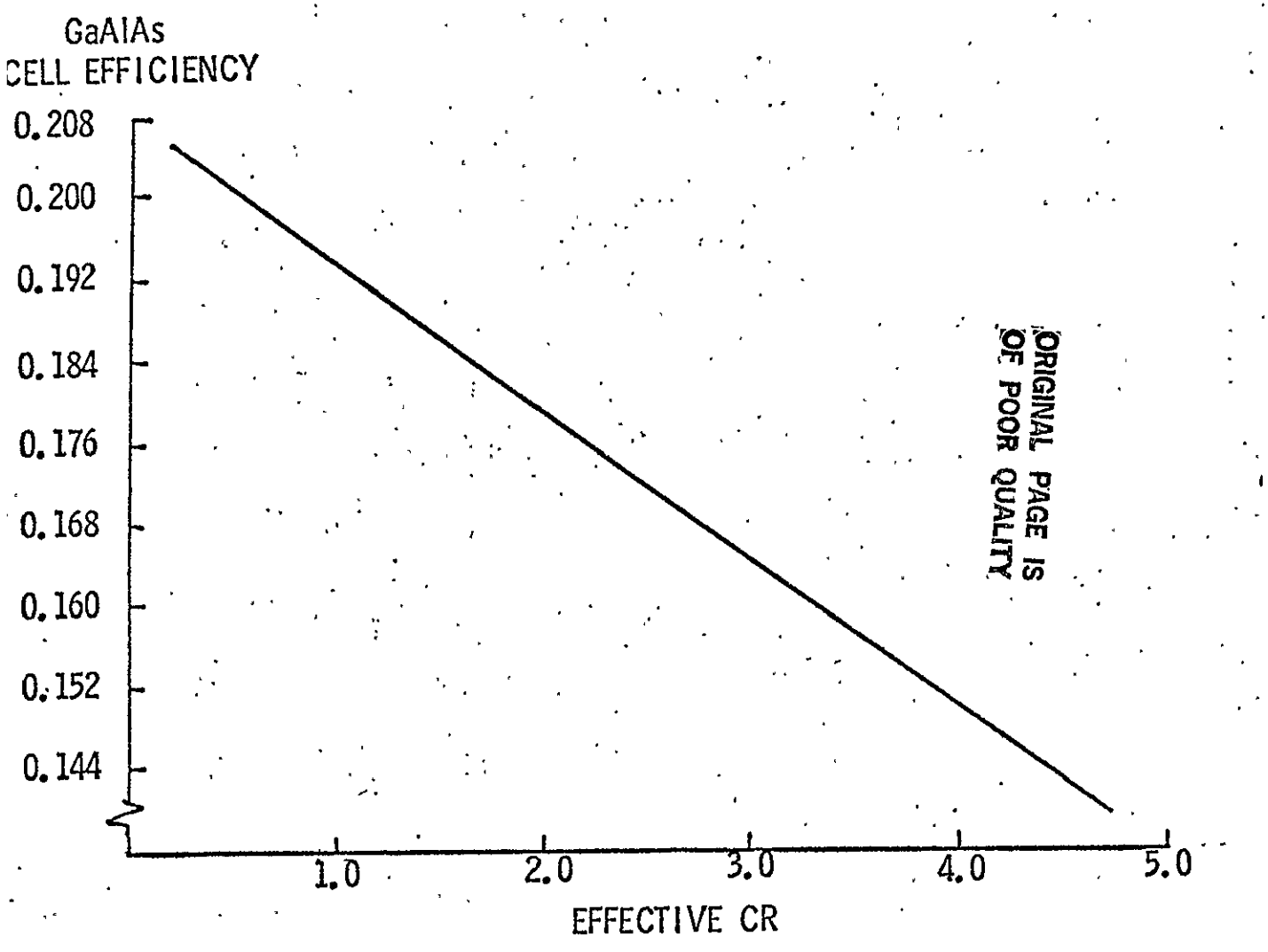

ORIGINAL PAGE IS
OF POOR QUALITY

ATMOSPHERIC POWER DENSITY LIMITS

The importance of achieving a high "configurational" efficiency in order to reduce the SP (or antenna) diameter is reflected in these curves which show the upper limit power that can be transmitted for various antenna diameters. For concept R-4B, shown previously, the antenna diameter of 2.181 km is right at the knee of the curve. A decrease in the antenna diameter (i.e., an increase in "configurational" efficiency) will have a significant payoff in allowable power transmitted from the satellite. Alternatively, if it can be determined that the power density limit can be increased from 23 mW/cm^2 to, say, 40 mW/cm^2, then allowable power levels are also increased significantly. The capital cost sensitivity to charges in the atmospheric power density limits will be shown.

ATMOSPHERIC POWER DENSITY LIMITS

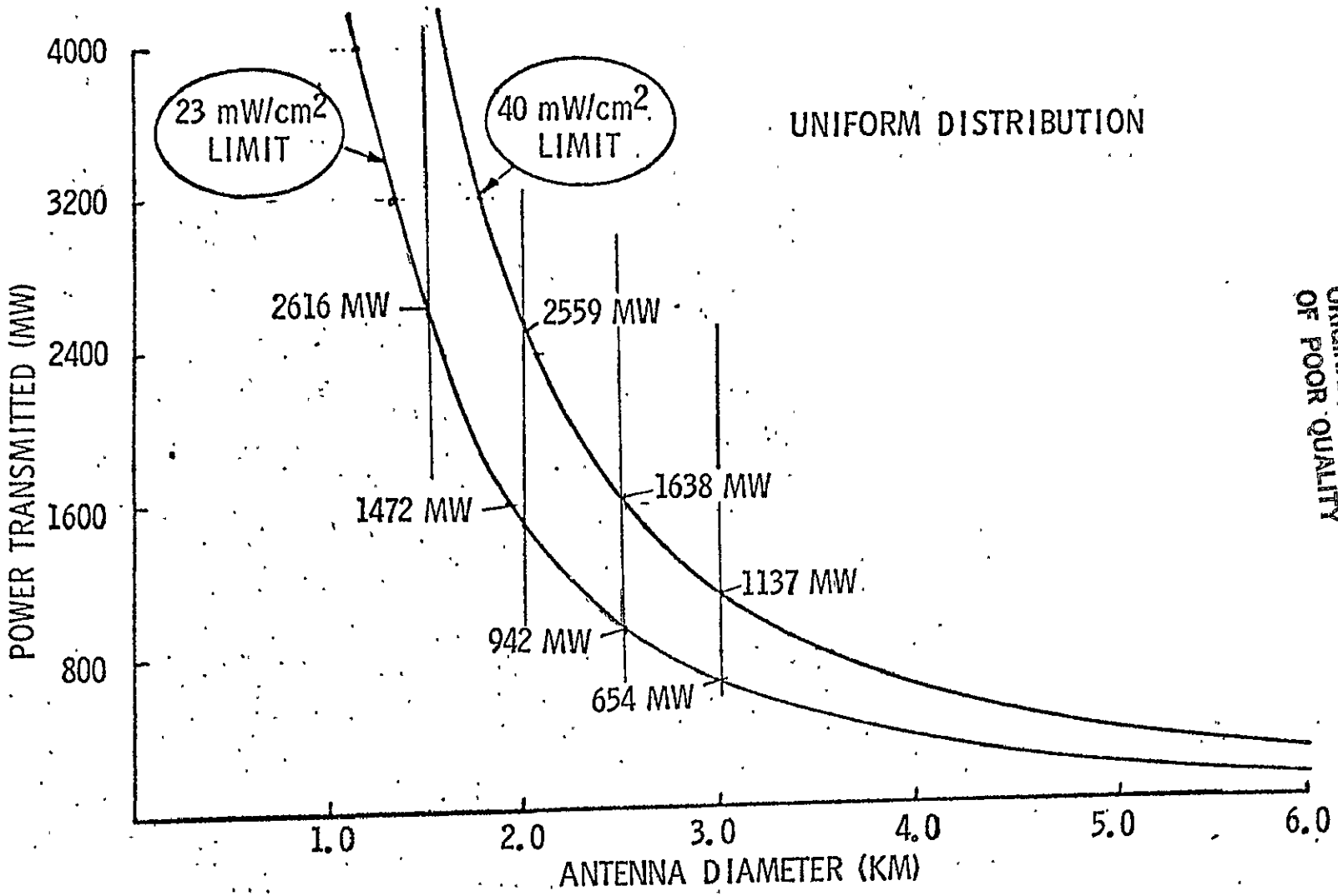

ORIGINAL PAGE IS OF POOR QUALITY

SATELLITE MASS AND SYSTEM COST ASSUMPTIONS

The assumptions used in calculating the capital costs of an SP/SPS are shown. Wherever possible, mass and cost estimates used in generating the DOE/NASA reference system were employed.

SATELLITE MASS AND SYSTEM COST ASSUMPTIONS

SATELLITE MASS ASSUMPTIONS		
SOLAR CELLS	0.252 KG/M^2	TO THESE MASS ASSUMPTIONS ADD 25% FOR GROWTH MARGIN
SOLID STATE AMPS	0.600 KG/KW	
ANTENNA PANELS	0.750 KG/M^2	
REFLECTORS	0.020 KG/M^2	
IMS & PHASE CONTROL	NASA/DOE REF. EST.	
STRUCTURES, ET. AL.	EST. BASED ON SIZE	

SYSTEM COST ASSUMPTIONS	$67/M^2	
SATELLITE COSTS		
SOLAR CELLS	$67/M^2	TO THESE COST ASSUMPTIONS ADD 16% FOR A&E, SEM AND CONTINGENCY
SOLID STATE AMPS	$100/KW	
ANTENNA PANELS	$10/M^2	
REFLECTORS	$3/M^2	
IMS & PHASE CONTROL	$200x10^6	
STRUCTURES, ET. AL.	$50/KG	
ASSEMBLY & SUPPORT COSTS	10% SAT. COSTS	
TRANSPORTATION COSTS	$41/KG (TO GEO)	
RECTENNA COSTS	$40/M^2 BEAM AREA)	

ORIGINAL PAGE IS OF POOR QUALITY

SIZING THE SP/SPS CONCEPT R-4B

An example calculation, based on concept R-4B, is shown to illustrate the first steps in estimating SP/SPS capital costs. One should note that a reflector efficiency of 0.85 was used, and with the double-reflector concept this equates to $0.85^2 = 0.7225$. The solar cell efficiency is obtained from the preliminary plot shown earlier and when multiplied by the effective CR, yields a "configurational" efficiency of 0.348. By following the "recipe" previously described, the power delivered to the utility interface can then be calculated.

SIZING THE SP/SPS CONCEPT R-4B

THEORETICAL CR = 2.814
SEASONAL VAR'N = 0.9578
REFLECTOR EFF. = 0.7225

→ EFFECTIVE CR = 1.935
SOLAR CELL EFF = 0.18

→ CONFIGURATIONAL EFFICIENCY, $E_C = 0.348$

$$P_{T/M^2} = 950.6 \times 0.348 = 331 \text{ W/M}^2$$

$$A_T = \sqrt{\frac{4623}{331}} = 3.737 \text{ KM}^2 \quad (D_T = 2.18 \text{ KM})$$

$$P_T = 3.737 \times 331 = 1{,}237 \text{ MW}$$

$$A_{REFL} = 9.95 \times 3.737 = 37.2 \text{ KM}^2$$

$$A_R = \frac{57.5}{3.737} = 15.39 \text{ KM}^2$$

$$P_{UI} = 0.66 \times 1{,}237 = 816 \text{ MW}$$

CAPITAL COST ESTIMATES FOR CONCEPT R-4B

The data shown is a continuation of estimating SP/SPS capital costs for concept R-4B. From the material presented in prior charts, the data generated is self-explanatory. Given that the $2,755 per kilowatt is a representative capital cost, then the concept is in the competitive reach of the DOE/NASA reference system capital costs, e.g., approximately $2,400 per kilowatt.

CAPITAL COST* EQUATION FOR SP/SPS CONCEPT
*(Dollars Per Kilowatt at Utility Interface)

$$\$257.69 + \$251.55\, E_{CF}^{-1} + \underbrace{\$74.36\, CR_E E_{CF}^{-1}} + \$676.36\, E_{CF}^{-1} A_T^{-1} + \underbrace{4{,}252.47\, E_{CF}^{-1} A_T^{-2}}$$

NOTE: THIS TERM IS A FUNCTION ONLY OF SOLAR CELL EFFICIENCY, E_{SC}.

EXAMPLES:
- 18% E_{SC} → \$413.11
- 36% E_{SC} → \$206.56

NOTE: THIS TERM IS A FUNCTION ONLY OF THE ATMOSPHERIC DENSITY LIMIT.

EXAMPLES:
- 23 mW/cm^2 → \$874.41
- 46 mW/cm^2 → \$437.21

LEGEND:

E_{CF} - CONFIGURATIONAL EFFICIENCY - IS THE PRODUCT OF E_{SC} (SOLAR CELL EFFICIENCY) TIMES CR_E (EFFECTIVE CONCENTRATION RATIO)

A_T - AREA OF TRANSMITTING ANTENNA IN KM^2

$A_T = 2.205\, E_{CF}^{-\frac{1}{2}}$ (AT 23 mW/cm^2)

ORIGINAL PAGE IS OF POOR QUALITY

SOME SP/SPS CONCEPT SENSITIVITIES

A second SP/SPS concept with eight reflectors (one primary and seven secondaries) was configured and the capital cost estimating process repeated. The results showed a more competitive capital cost, e.g., $2,366 per kilowatt, with power delivered to the utility interface of slightly in excess of one gigawatt. Questions naturally arose as to the potential impact of multi-band gap cells of higher efficiency and of increased atmospheric power density limits. This chart depicts the results of some of the selected (arbitrarily) parameters. The sharp reductions in SP/SPS capital costs may or may not be achievable, but the theoretical potential of the concepts clearly dictate that they be explored to a greater depth.

SOME SP/SPS CONCEPT SENSITIVITIES

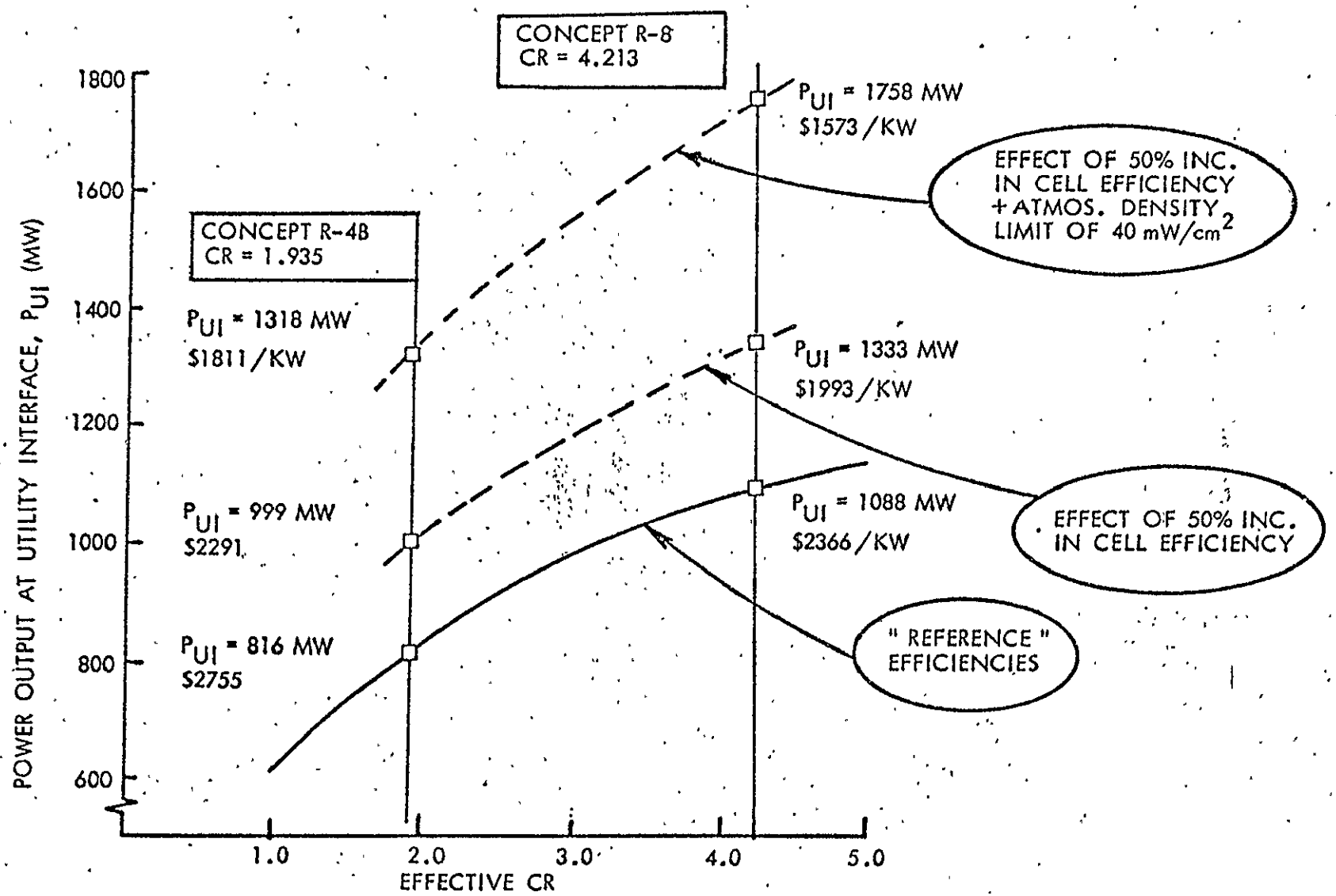

ORIGINAL PAGE IS OF POOR QUALITY

POTENTIAL ADVANTAGES OF THE SP/SPS CONCEPT

The potential advantages of the SP/SPS concept can be summarized as follows: Fewer technological barriers to overcome; safer to build and operate; more reliable; and lower costs.

POTENTIAL ADVANTAGES OF THE SP/SPS CONCEPT

- ALLEVIATES/BYPASSES CONCERNS:

  TECHNOLOGICAL ADVANCES IN POWER DISTRIBUTION AND CONTROL
  REQUIREMENTS FOR HI TEMPERATURE COMPOSITE STRUCTURES
  ASSEMBLY, OPS AND MAINTENANCE IN A HI VOLTAGE, HI TEMP
  ENVIRONMENT POWER TRANSFER ACROSS A ROTARY JOINT

- RELIABILITY OF MWPTS SHOULD BE GREATLY ENHANCED
- POWER LEVELS OF 1 TO 2 GW MORE ADAPTABLE FOR EXPORT MARKET
- HIGHER DENSITY PACKAGING FOR LAUNCH VEHICLE INTEGRATION
- POC/DEMO SATELLITE MAY BE MORE COMPATIBLE WITH SCHEDULE AND FUNDING
- POSTULATED ADVANCES IN SOLAR CELL, SOLID STATE AMPLIFIER AND REFLECTOR EFFICIENCIES COULD SIGNIFICANTLY ENHANCE COMPETITIVE POSTURE OF SPS

ORIGINAL PAGE IS
OF POOR QUALITY

DOMAINS OF MOST PROMISING SP/SPS DESIGN CONCEPTS

From the data presented, the obvious question to be raised is: What is the most cost effective SP/SPS configuration? By laying out additional design concepts, parametric relationships relative to a range of effective concentration ratios were developed. Recall that the first step in the process of estimating capital costs results in the computation of power delivered to the utility interface. These results are shown as the dashed line on the chart and correlate with the right side axis. Typically, minimum costs relate to maximum powers and the initial reaction is that an optimum design will have a CR_E in the range of from 7 to 8. But - as shown by the solid line - continuing through the process, the minimum capital costs occurred at a CR_E of between 4 and 5. The minimums at that range are a result of the decrease in solar cell efficiency with the corresponding increase in CR_E. These data are based on an atmospheric power density limit of 23 mW/cm^2.

DOMAINS OF MOST PROMISING SP/SPS DESIGN CONCEPTS

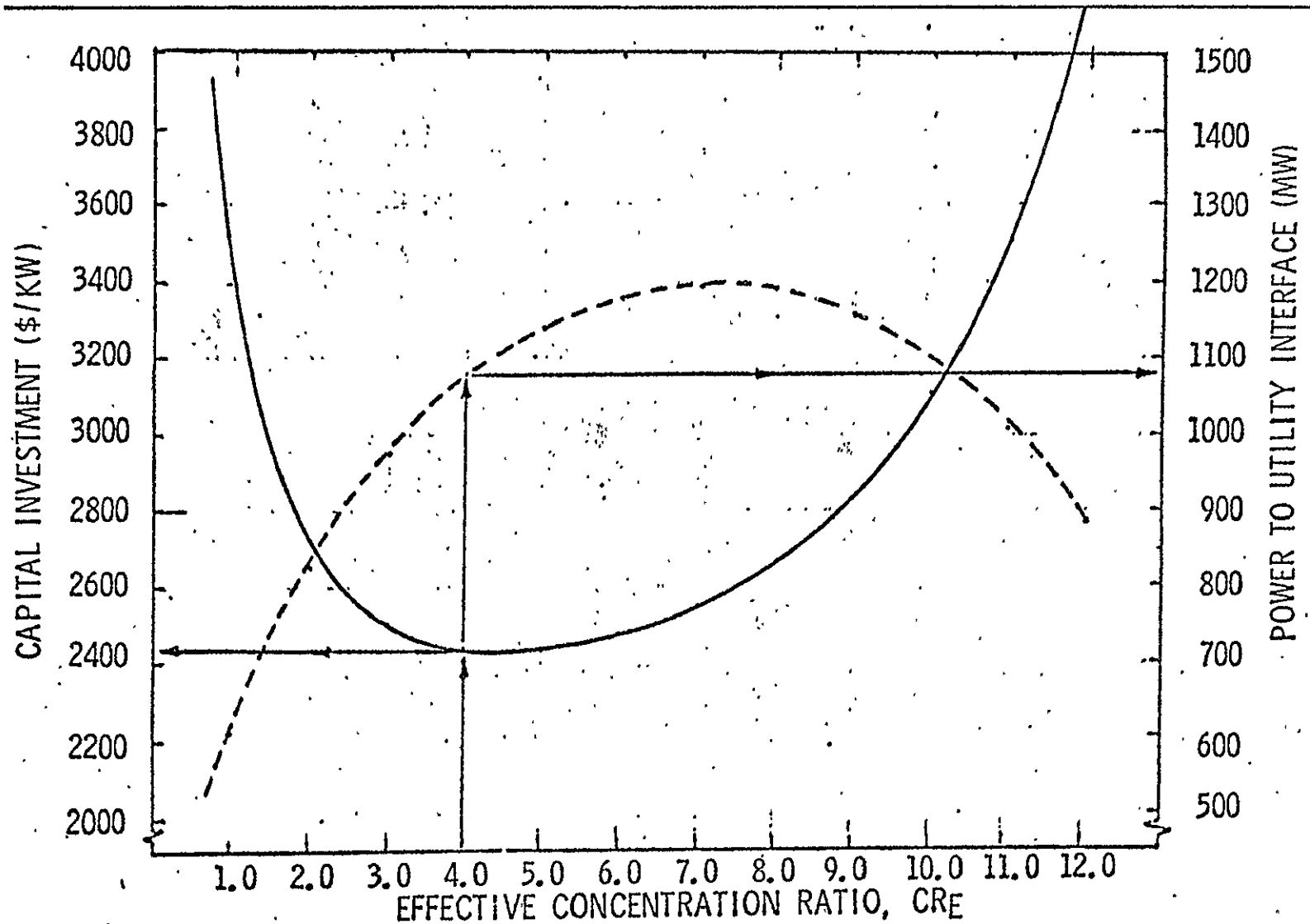

IMPLICATIONS OF CONFIGURATIONAL ANALYSES

The first two Technology Implications listed are clearly evident at this stage of the configurational analysis. To a lesser capital-cost-impact degree, the third item listed is nevertheless of equal programmatic importance in that it represents an achievable near-term objective. Of course much greater in-depth work need to be conducted in the design and analysis of SP/SPS concepts. But the potential appears promising.

IMPLICATIONS OF CONFIGURATIONAL ANALYSES

TECHNOLOGY IMPLICATIONS*

- ATMOSPHERIC DENSITY LIMIT DEFINITION
- MULTI-BAND GAP SOLAR CELL DEVELOPMENT
- OPTICAL FILTERING AND MATERIAL REFLECTIVITY

DESIGN/ANALYSIS IMPLICATIONS

- CONCEPTUALIZE CR_E RANGES OF FROM 4 TO 8
- DESIGN SANDWICH PANEL SUBSYSTEMS
- ANALYZE SANDWICH PANEL THERMAL INTERACTIONS
- REFINE SATELLITE MASS AND SYSTEM COST ESTIMATES

*ASSUMES SOLID STATE TECHNOLOGY IN WORK

MAJOR CONCERNS OF THE SP/SPS CONCEPT

Listed are the major concerns initially expressed about the SP/SPS concept approach. Preliminary analyses conducted by individuals in the NASA and industry indicate promise on the resolution of each of these concerns.

MAJOR CONCERNS OF THE SP/SPS CONCEPT

- SATELLITE CONFIGURATION, SIZE
- ORIENTATION AND ANTENNA POINTING
- MWPTS PHASE CONTROL
- SP THERMAL COMPATABILITY
- UNIFORM vs GAUSSIAN POWER DISTRIBUTION
- SOLID STATE TECHNOLOGIES
- SYSTEM POWER LEVELS

COST TRADES FOR SP/SPS CONCEPTS OF EQUAL E_{CF}

The design preferences referred to on the previous chart may not ultimately represent realistic objectives for a CR_E of 4. There are other design alternatives, however, that may allow one to approach the lower capital costs. Designing to a higher CR_E is an alternative that was exercised to develop the comparative data shown. For example; although more than twice the reflector area (and supporting structures) are required for an E_{CE} of 1.20 with a CR_E of 8 as opposed to a CR_E of 4, it may be more technologically realistic to achieve a solar cell efficiency of 15% with the CR_E of 8 than 30% with the CR_E of 4. The configurational analyses give an insight into some of the alternative concepts to be pursued as the SP/SPS is studied in greater depth.

COST TRADES FOR SP/SPS CONCEPTS OF EQUAL E_{CF}

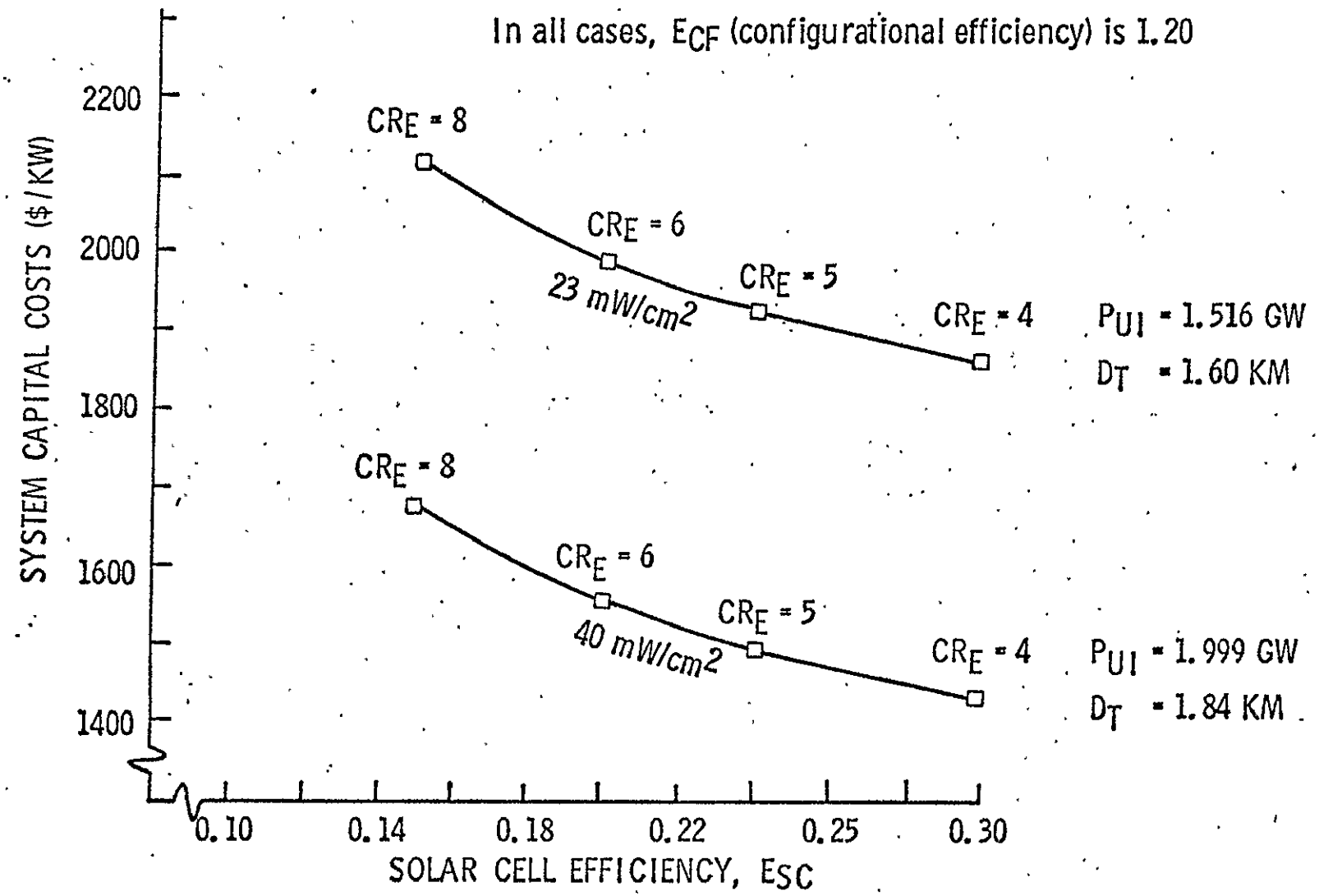

SP/SPS CONCEPT SENSITIVITIES FOR CR_E OF 4.0

The magnitude of capital cost impacts attributable to increasing solar cell efficiencies and/or atmospheric power density limits on an SP/SPS concept with a CR_E of 4.0 is shown. A line (dashed) indicating satellites of identical size illustrates changes in power levels (P_{UI}) experienced for combinations of E_{SC} and power density limits. The dramatic decrease in capital costs yields a clear indication of design preferences.

S

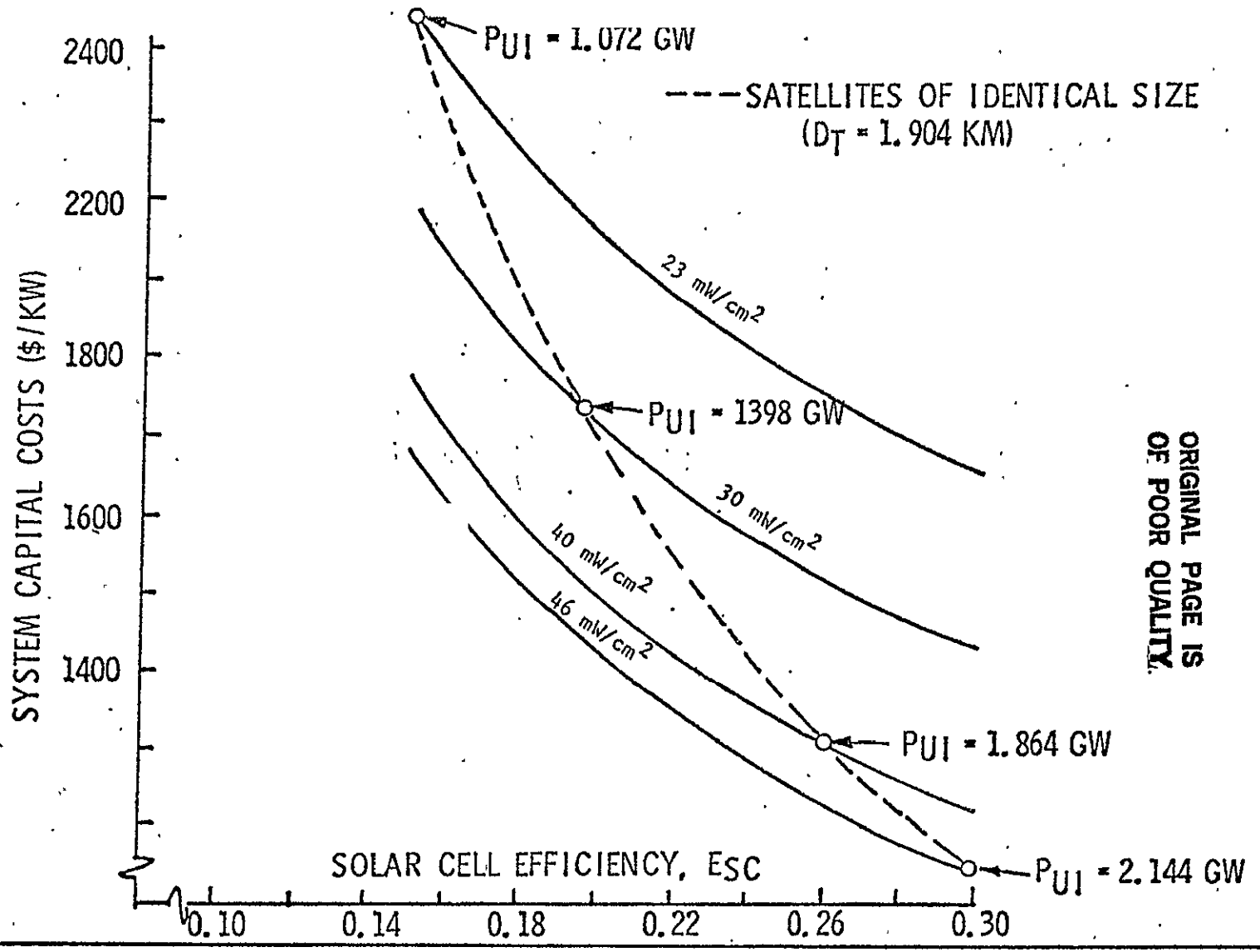

ORIGINAL PAGE IS OF POOR QUALITY

CAPITAL COST* EQUATION FOR SP/SPS CONCEPT
(DOLLARS PER KILOWATT AT UTILITY INTERFACE)

In order to gain more visibility into the contribution of ingredients that constitute capital costs, the "recipe" given earlier was refined and boiled down to the single equation shown. Of the four variable terms in the equation, note that "configurational" efficiency, E_{CF}, is in the denominator of each. Note also - as indicated on the chart - the relative impacts of solar cell efficiency and of the atmospheric density limit. When one is operating in the range of $2,000 per kilowatt, the significance of these numbers is readily apparent.

CA

SATELLITE MASS ESTIMATES (10^6 KG)

SOLAR CELLS	0.942
SOLID STATE AMPS	0.773
ANTENNA PANELS	2.803
REFLECTORS	0.744
IMS & PHASE CONTROL	0.772
STRUCTURES, ET AL	2.000
GROWTH MARGIN	2.009
	10.043

SYSTEM COST ESTIMATES ($\$10^6$)

SATELLITE COSTS		828.15
SOLAR CELLS	250.38	
SOLID STATE AMPS	128.85	
ANTENNA PANELS	37.37	
REFLECTORS	111.55	
IMS & PHASE CONTROL	200.00	
STRUCTURES, ET AL	100.00	
ASSEMBLY & SUPPORT COSTS		82.82
TRANSPORTATION COSTS		411.76
RECTENNA COSTS		615.60
A&E, SEM & CONTINGENCY COSTS		310.13
		2,248.46

CAPITAL COST ESTIMATE = $2,755/KW

ORIGINAL PAGE IS OF POOR QUALITY

SPS ANTENNA CONCEPTS

PRECEDING PAGE BLANK NOT FILMED

MICROWAVE TRANSMISSION SYSTEM—SATELLITE ANTENNA

This chart depicts the basic configuration, including overall dimensions of the selected antenna structure concept.

The smallest antenna building block is the power module, which varies in size from the one illustrated (which is used at the center portion of the antenna) to 3.40 by 5.82 meters at the periphery of the antenna. Ten different power module sizes are used to comprise the antenna element. Each power module has a klystron located in its center. The power modules are arranged into subarrays measuring 10.2 by 11.64 meters. Each subarray has its own phase control electronics. Nine subarrays are connected to form a mechanical module 30.82 by 34.92 meters.

MICROWAVE TRANSMISSION SYSTEM - SATELLITE ANTENNA

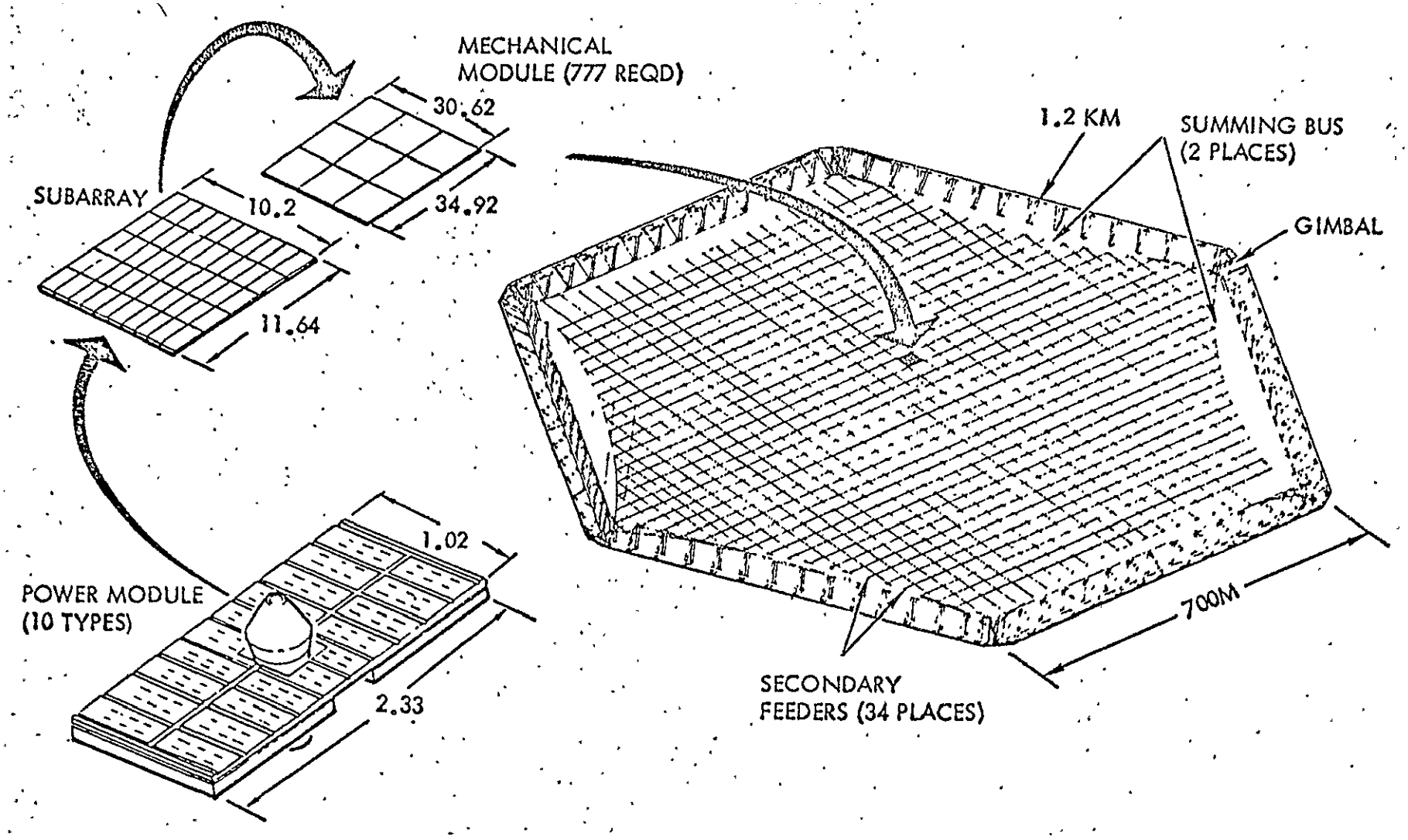

SOLID STATE ANTENNA CONCEPT

The antenna array is composed of a series of modular units of diminishing size. The major unit is the mechanical module which consists of a graphite-epon structure. The structure is attached to the dual set of crossed catenary cables, which are attached to a compression frame at the array edge and form a tension-web (trampoline structure). Each 30.62 × 92-m mechanical module is an assembly of nine 10.20 × 11.64-m subarrays. Each subarray is a radiating element in the total array. As such, it has a single transmitting phase which is set by the retro-electronics associated with the subarray.

The subarrays are formed out of power modules. Each power module has a single dc-to-microwave converter together with its associated radiator. In the point design, these are resonant cavity radiators (RCR's). There are ten types of power modules, all with converters of the same power, but differing in size.

A typical power module assembly consisting of a 50 kW, solid state dc-RF converter installed on a typical power module is also illustrated.

SOLID STATE ANTENNA CONCEPT

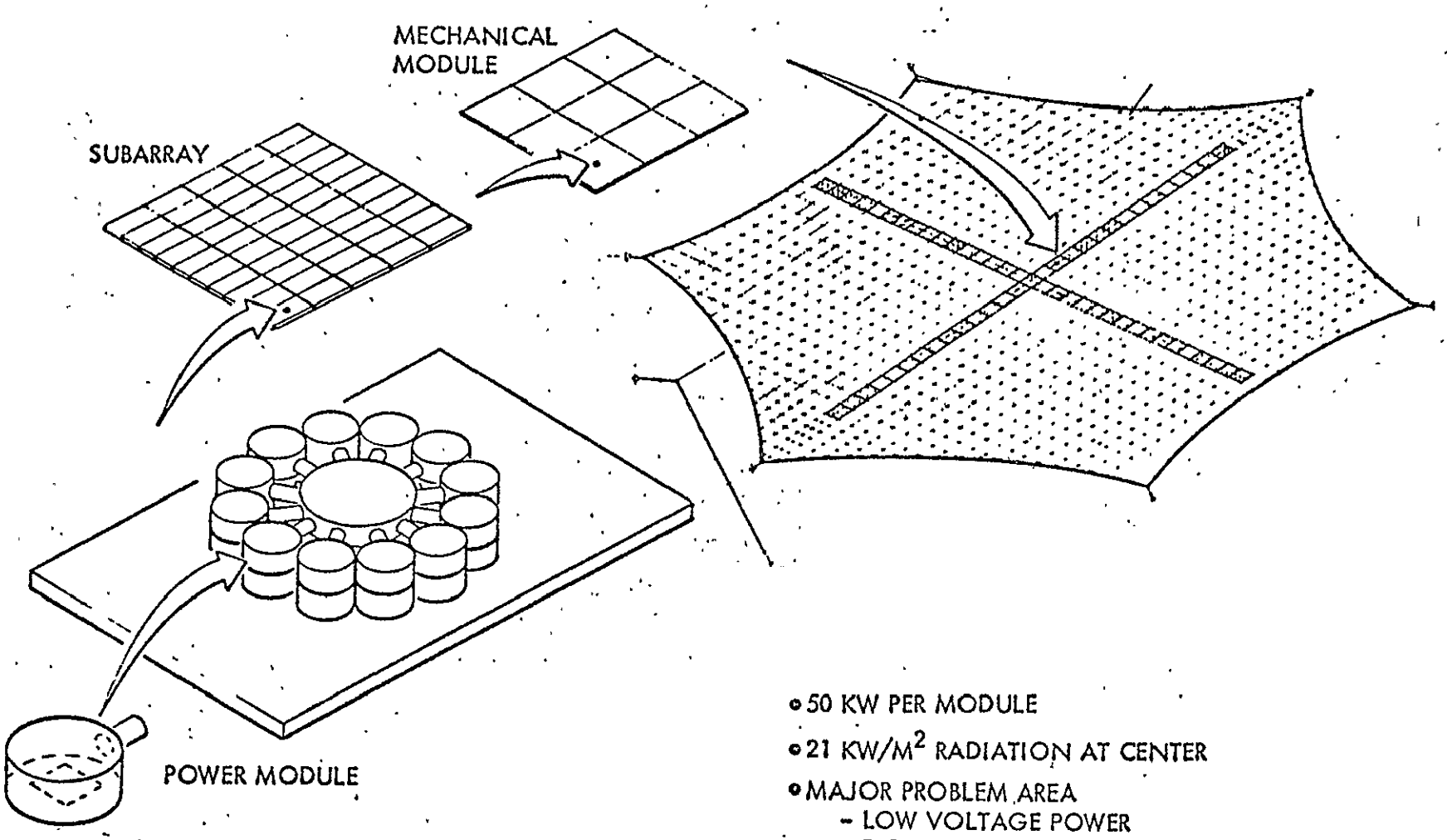

- 50 KW PER MODULE
- 21 KW/M^2 RADIATION AT CENTER
- MAJOR PROBLEM AREA
  - LOW VOLTAGE POWER DISTRIBUTION SYSTEM
  - THERMAL CONTROL

PROJECTED SOLID STATE POWER MODULE EFFICIENCY REQUIREMENTS TO ACHIEVE OVERALL EFFICIENCIES OF AT LEAST 78%

The projected solid state power module efficiencies will decrease as output power increases due to the effects of additional combiners and module stacking.

PROJECTED SOLID STATE POWER MODULE EFFICIENCY REQUIREMENTS TO ACHIEVE OVERALL EFFICIENCIES OF AT LEAST 78%

ITEM	POWER OUTPUT AT 2.45 GHz			
	500 W	1 KW	10 KW	50 KW
BASIC AMPLIFIER CIRCUIT EFFICIENCY	92%	90%	90%	95%
OUTPUT RADIAL LINE COMBINER EFFICIENCY	95% (0.23DB)	95% (0.23DB)	94% (0.27DB)	93% (0.27DB)
MULTI-MODULE OUTPUT RADIAL LINE COMBINER EFFICIENCY	-	-	93% (0.31DB)	92% (0.03BDB)
STACKING EFFICIENCY	-	-	-	95%
OVERALL EFFICIENCY	90%	85.5%	79%	78%

ORIGINAL PAGE IS OF POOR QUALITY

Rockwell International

68PD130735X

SPS SOLID STATE POWER MODULE CANDIDATES USING CONVENTIONAL POWER COMBINING TECHNIQUES

Based on the previous transistor electrical performance and physical profile projections, a wide range of solid state power module options are available. Current optimization estimates indicate that the 1 kW to 5 kW output power range appears to be best for the solid state power module.

SPS SOLID STATE POWER MODULE CANDIDATES

USING CONVENTIONAL POWER COMBINING TECHNIQUES

ITEM	POWER OUTPUT AT 2.45 GHz			
	500W	1KW	10KW	50KW
BASIC AMPLIFIER CONFIGURATION	115W Single Stage Class C or E (≤ 90% Efficiency)	236W Push Pull Class C or E (≤ 86% Efficiency)	247W Push Pull Class C or E (≤ 79% Efficiency)	260W Push Pull Class C or E (≤ 78% Efficiency)
COUPLER CONFIGURATION	5 Way-Radial Line (Fused Silica or Sapphire)	5 Way-Radial Line (Fused Silica or Sapphire)	10-1KW Modules on a 10 Way-Radial Line Coupler (Fused Silica or Sapphire)	12-2.6KW Modules on a 12 Way-Radial Line Coupler stacked with another 12 Modules (Sapphire)
SUPPLY VOLTAGE	40V	40V	25V	40V
TRANSISTOR CANDIDATE	GaAs Bipolar	GaAs Bipolar	GaAs FET	GaAs Bipolar
NUMBER OF INDIVIDUAL SS POWER MODULES	13,586,400	6,793,200	679,320	135,864
INDIVIDUAL SS POWER SIZE	4" Diam x 2"	4" Diam x 2"	17" Diam x 3"	20" Diam x 8"
INDIV. SS PWR MOD WGT (with DC/DC Conv.)	2.5 lb.	2.7 lb.	22 lb.	83 lb.
STATUS	Could be built now with push-pull @ 50%-60% eff. using 10-way combiner	Significant R&D required for transistor	Significant R&D required for circuit eff., combiner loss and transistor out-	Significant R&D required for circuit eff., combiner loss, thermal management and transistor output

ORIGINAL PAGE IS OF POOR QUALITY

PRELIMINARY IMPLICATIONS FOR SPS SOLID STATE POWER MODULE AND MPTS ARRAY CONFIGURATIONS

The preliminary implications for the SPS solid state power module approach indicate a lower optimum module output power (1 kW - 5 kW) compared with the klystron (50 kW). The preliminary implications also indicate a significant change in the size, weight and complexity of the solid state module power distribution system. Increased complexities and reduced efficiencies associated with the solid state module power distribution system, in the present point design configuration, appear to require an alternate SPS configuration for the solid state approach.

PRELIMINARY IMPLICATIONS FOR SPS SOLID STATE POWER MODULE AND MPTS ARRAY CONFIGURATIONS

SOLID STATE POWER MODULE CONFIGURATION	DESIGN DRIVER	REASONS
• 1 KW TO 5 KW POWER MODULE	• POWER DISTRIBUTION DC/DC CONVERTER.	• CAPACITANCE LIMITATION ON TRANSFORMER WINDINGS.
	• THERMAL PROFILE	• TEMPERATURE LIMITATIONS ON STACKED MODULES.
	• EFFICIENCY	• LOWER POWER MODULES ARE MORE EFFICIENT
• HIGH TEMPERATURE (ALLOY) BONDING	• LIFE-TIME	• CONVENTIONAL BONDS WILL FAIL OVER 200°C.
• MATCHED SERIES TRANSISTOR PAIRS* (NOT A GOOD IDEA FROM EFFICIENCY STANDPOINT)	• LIFE-TIME	• TRANSISTOR FAILURES TEND TO INCREASE AS BREAKDOWN VOLTAGE IS APPROACHED.
• MPTS ARRAY SIZE AND POWER DISTRIBUTION CHANGE	• POWER MODULE & ELECTRONICS TEMPERATURE	• BASE TEMPERATURES IN EXCESS OF 250°C ARE ANTICIPATED. ≠
• MICROWAVE POWER DISTRIBUTION SYSTEM MAJOR CHANGES.	• TRANSISTOR BREAKDOWN VOLTAGE	• LOW VOLTAGE (<100v) HIGH CURRENT PROBLEM.

*WHAT WE NEED IS A TRANSISTOR, CAPABLE OF DELIVERING 92% EFFICIENCY AT 2.45 GHz, WITH A SIMPLE STRUCTURE, HIGH TEMPERATURE CAPABILITY AND A BREAKDOWN VOLTAGE IN EXCESS OF 300v.

≠ELECTRONICS ARE PRIMARY THERMAL DESIGN DRIVER (<100°C).

ORIGINAL PAGE IS OF POOR QUALITY

DC/RF SOLID-STATE/WAVEGUIDE SPS CONCEPTS

The data presented in the following charts develop a series of ideas as to the feasibility of adapting the dc/RF, solid-state, waveguide principles, developed by Aerospace Corporation GSSPS to the MSFC four-trough galium-arsenide SPS under study contract to Rockwell International.

The facing chart shows the general arrangement of the Aerospace GSSPS and the Rockwell SPS systems. In the spring and fall of each year, the solar collector panels of GSSPS obscure each other. Aerospace Corporation suggests a twice-per-orbit libration about the satellite roll axis to minimize this obscuration. In the winter and summer, the panels do not obscure each other due to the 23.5-degree angle between the earth equatorial and ecliptic planes. The libration cycles must be phased to cause a once-a-year precession if synchronization with the changing sun angle is to be maintained. All of these maneuvers may require a complex attitude control system for the 47 km long string-like satellite to maintain sun-pointing of the solar panels and earth-pointing (to latitudes not on the equator) of the lens antenna.

The Rockwell configuration simplifies sun-pointing of solar cells and earth-pointing of the reflector-antenna using a simple mechanical rotary joint and pivot system containing no electrical or RF components. The satellite attitude is perpendicular to the equatorial orbit plane with the antenna located on the South Pole end of the satellite pointing toward northern earth latitudes. For south latitude antenna-pointing, the antenna is mounted on the North Pole end of the satellite. Ion propulsion units maintain active control over satellite attitude and either control-moment gyros or simple electric motor drives maintain earth-pointing of the antenna. The Aerospace Corporation GSSPS uses a three-layer (butterfly dipole/phase-shifter/butterfly dipole) lense antenna to transmit energy, emitted from a horn mounted on the end of the 47 km long main waveguide, in a coherent manner to earth. Latitude pointing and minor longitude pointing is accomplished by wave-front phasing and may require some mechanical pointing to maintain low sidelobe requirements.

The Rockwell configuration uses a paraboloidal wire mesh antenna to reflect and collimate energy transmitted by a waveguide mounted transmitter horn that is designed as a field lens to emit a spherical wave front. The waveguide horn is located at the focal point of the paraboloidal, wire mesh mirror.

DC/RF SOLIDSTATE/WAVE-GUIDE SPS CONCEPTS

ROCKWELL INTERNATIONAL CONFIGURATION

PERPENDICULAR TO EQUATORIAL ORBIT TYPE

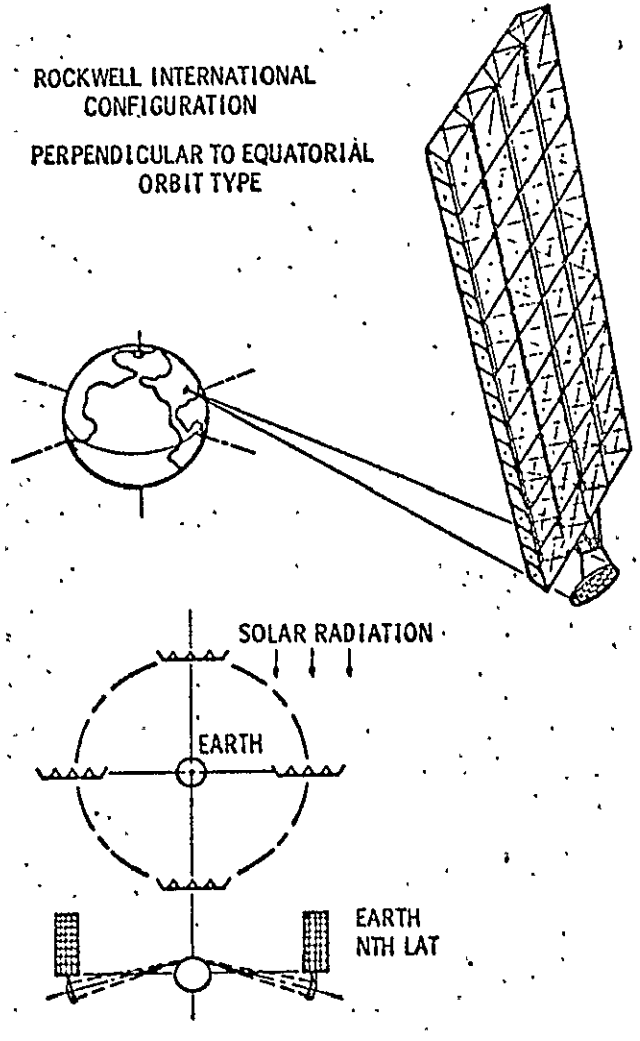

AEROSPACE CORPORATION CONFIGURATION

GRAVITY GRADIENT TYPE

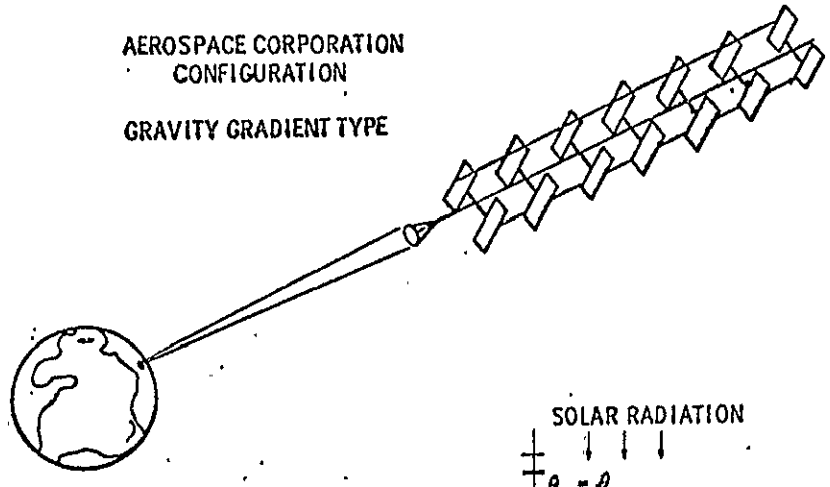

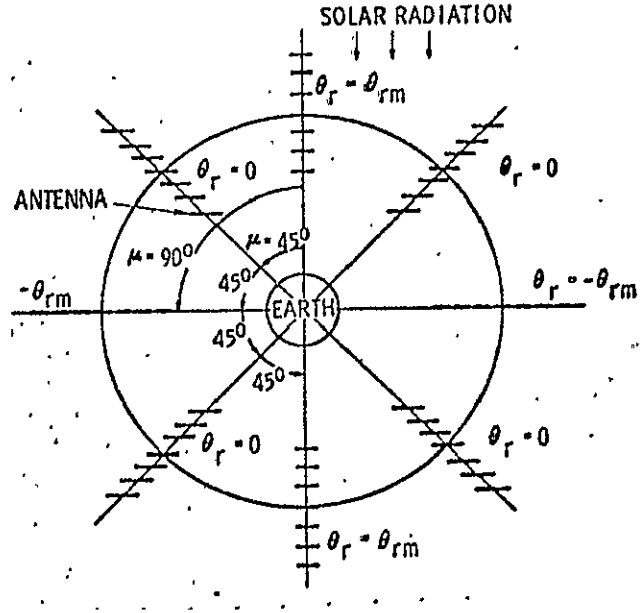

ORIGINAL PAGE IS OF POOR QUALITY

SOLID-STATE SATELLITE POWER SYSTEM

The general configuration of the Rockwell/MSFC four-trough SPS is shown on the facing chart. An antenna support structure is attached to the 600-m centrally located triangular structure. The support structure includes a rotary ring assembly and an antenna assembly attached by pivots to the rotating element of the ring assembly. The rotating ring (axis along SPS centerline) permits the daily rotation of the antenna; the pivot permits latitude antenna pointing.

RF waveguides and solar cell panel in transverse orientation are shown.

SOLID STATE SATELLITE POWER SYSTEM

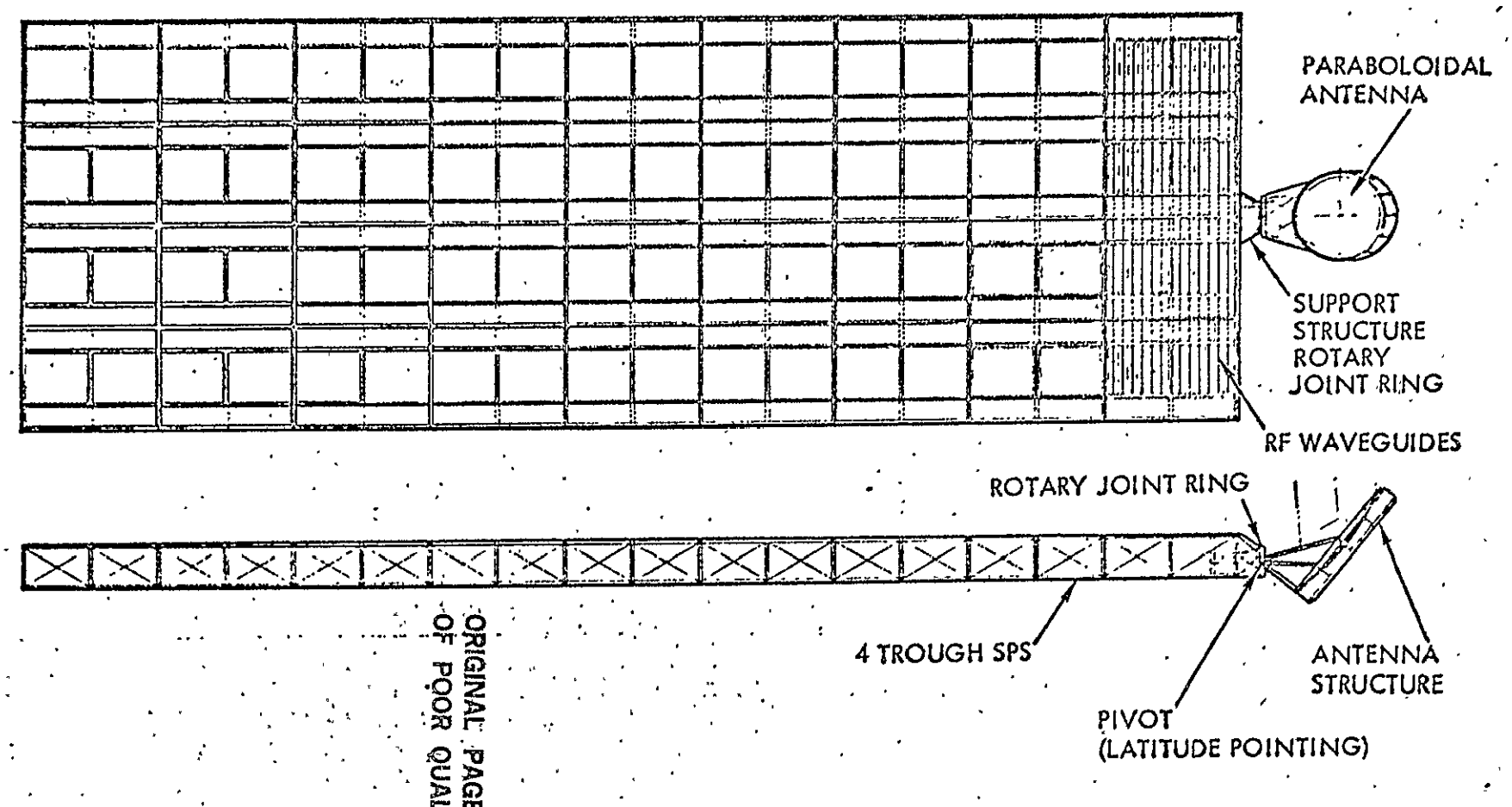

ORIGINAL PAGE IS OF POOR QUALITY

LIGHT-TO-MICROWAVE CONVERTER (LITOMIC)

This chart illustrates the basic elements of the sandwich panel concept.

LIGHT-TO-MICROWAVE CONVERTER (LITOMIC)

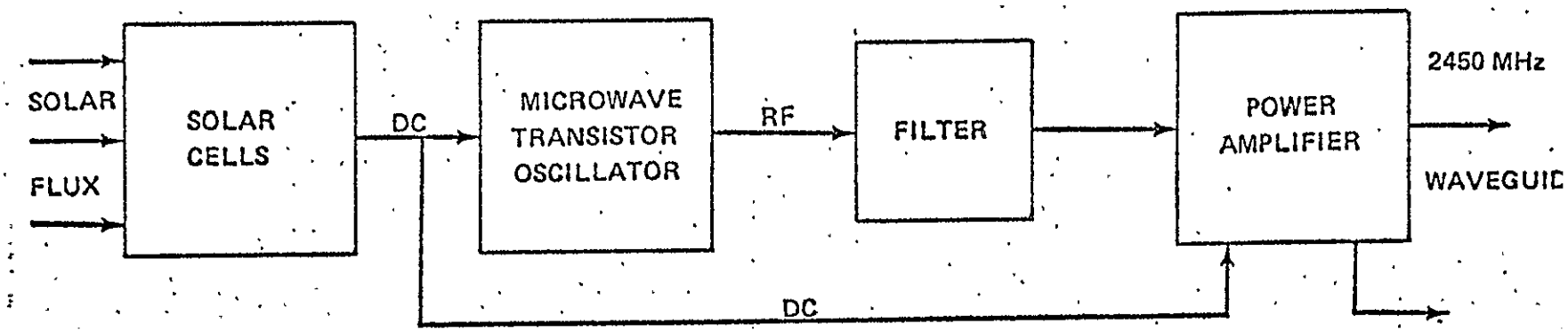

(a) MODULE TYPE A

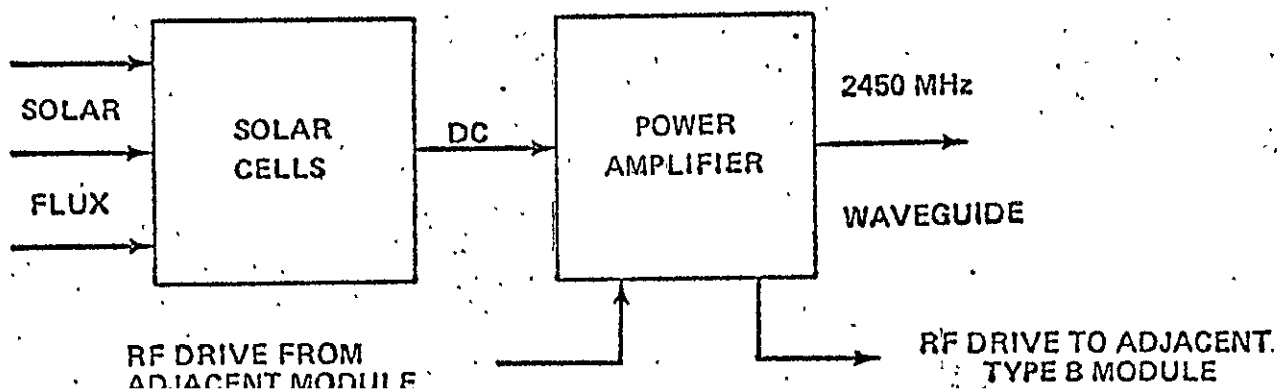

(b) MODULE TYPE B

ORIGINAL PAGE IS OF POOR QUALITY

ALTERNATIVE SOLID STATE ANTENNA CONCEPTS

The present satellite point design utilizes HV klystron dc-RF converters to convert the dc power generated to the 2.45 GHz microwave state. The power for the RF converters is transferred at 40 kV dc (nominal) across the antenna slip rings, converted to five selected HV dc voltages and utilized by the klystrons.

Solid state dc-RF converters require an input voltage of less than 100 V (present design indicate an input voltage of approximately 40 V dc). If the appropriate voltage (40 V dc) is generated the current carrying capacity of the rings would need to be prohibitively large (one-half of approximately 10 GW @ 40 V $\approx 125\times10^6$ amps). If relatively high voltage is generated (20-40 kV dc) and transferred across the rings, the subsequent dc-dc conversion results as large increases in antenna mass ($10\text{-}20\times10^6$ kg) considering both the conversion elements and the additional thermal control requirements.

It was therefore concluded that the present satellite design concept was not compatible with a solid state dc-RF converter concept. Three alternate configuration concepts are identified which eliminate the power distribution effects but still present significant design problems although these are now in different areas. All three concepts restructure the solar blanket configuration to develop the low voltages required by the solid state devices and locate the dc-RF converters immediately adjacent to the solar blankets to reduce I^2R losses.

In the first alternative satellite the construction form is the same as the point design, however, the summed RF energy must now be transferred over a waveguide rotating joint with a capacity of over 4 GW @ 2.45 GHz.

The second alternative completely restructures the satellite and requires that the plane of the solar blanket be sun stabilized. The collected RF energy is transmitted to a free-flying stationkeeping satellite and retransmitted to the receiving rectenna. In order to control the RF beam it will be necessary to provide extremely precise stationkeeping and pointing/focusing control.

The third alternative shown is similar to the second except that the satellite is stabilized to the rectenna boresite and the variable sun angle is compensated for by using an attached (or if desirable a free-flying) reflecting mirror. The point accuracies required for this concept would be significantly less than for the second alternative.

ORIGINAL PAGE IS
OF POOR QUALITY

ALTERNATIVE SOLID STATE ANTENNA CONCEPTS

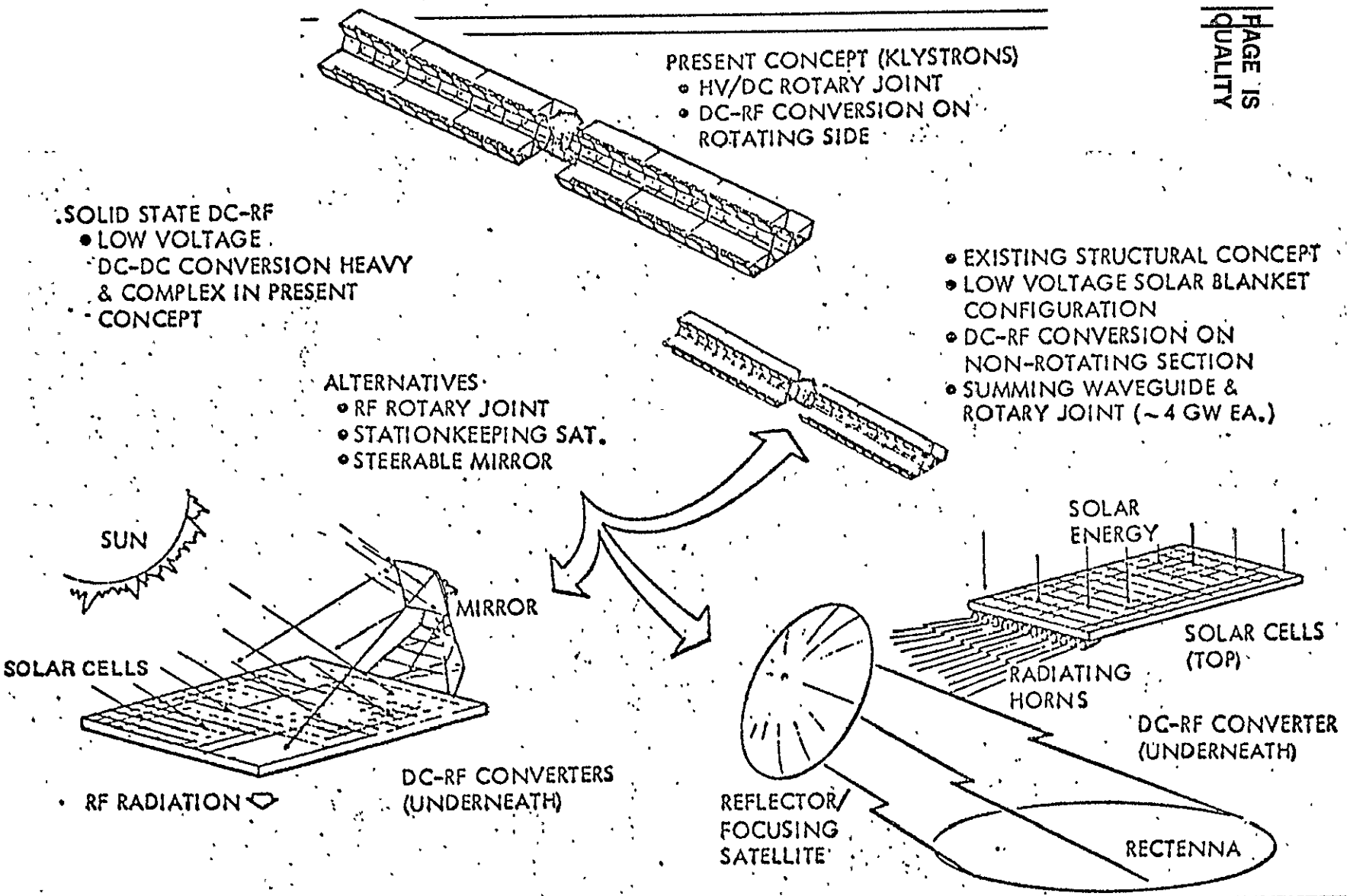

SP/SPS CONCEPT R-4B

The SP/SPS configuration shown uses a double set of flat mirrors to reflect sunlight to the solar cells of the Sandwich Panel. The three secondary reflectors and the SP are fixed in Earth equatorial space. The single primary reflector is always sun-oriented requiring a daily rotation of 360° and an annual "tilt" of plus-and-minus 11.75°. For the concept shown, an average annual effective concentration ratio of just under 2 was achieved. This resulted in an SP diameter of 2.181 kilometers and power delivered to the utility interface of 816 megawatts. Methods for computing these values will be shown.

SOLID STATE SOLAR CELL SANDWICH CONCEPT

SIDE VIEW

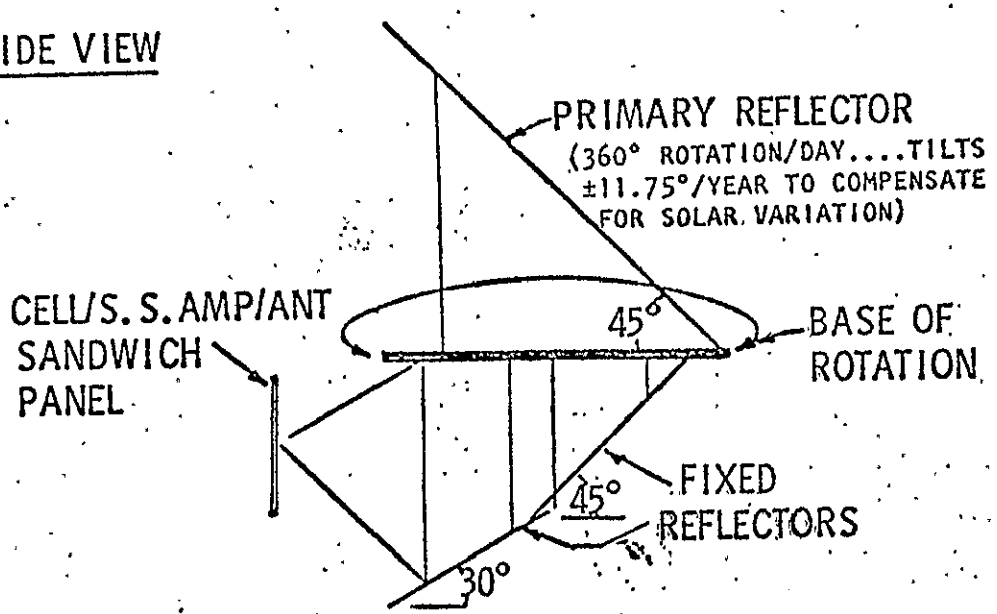

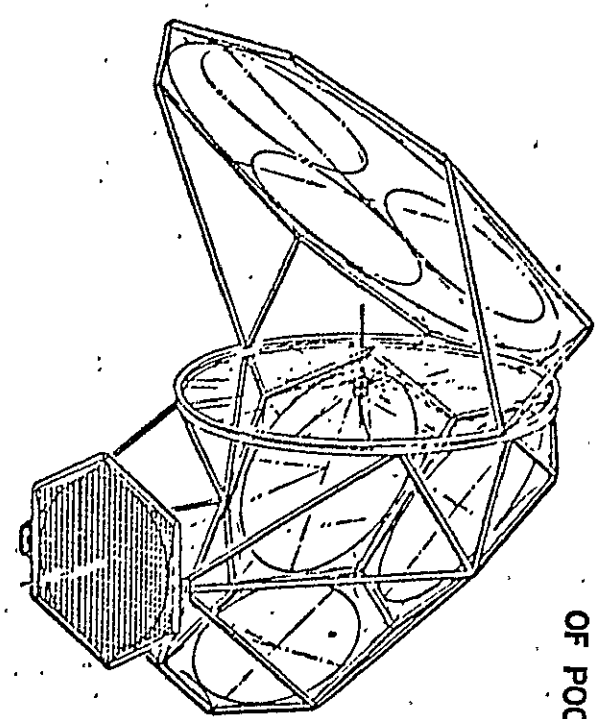

PLAN VIEW

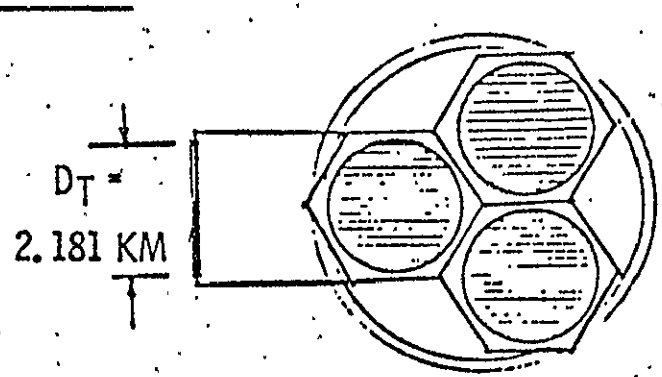

- P_T = 1237 MW
- P_{UI} = 816 MW

ORIGINAL PAGE IS
OF POOR QUALITY

ANTENNA FOOTPRINT

The antenna footprint from an SPS satellite antenna is presented. The concentric ellipses represented certain sidelobe levels and power levels as labeled. The dimensions (miles) of the sidelobes are also marked to indicate the distance of the sidelobe from the center.

EARTH ILLUMINATION FROM SPS EQUATORIAL SATELLITE ANTENNA

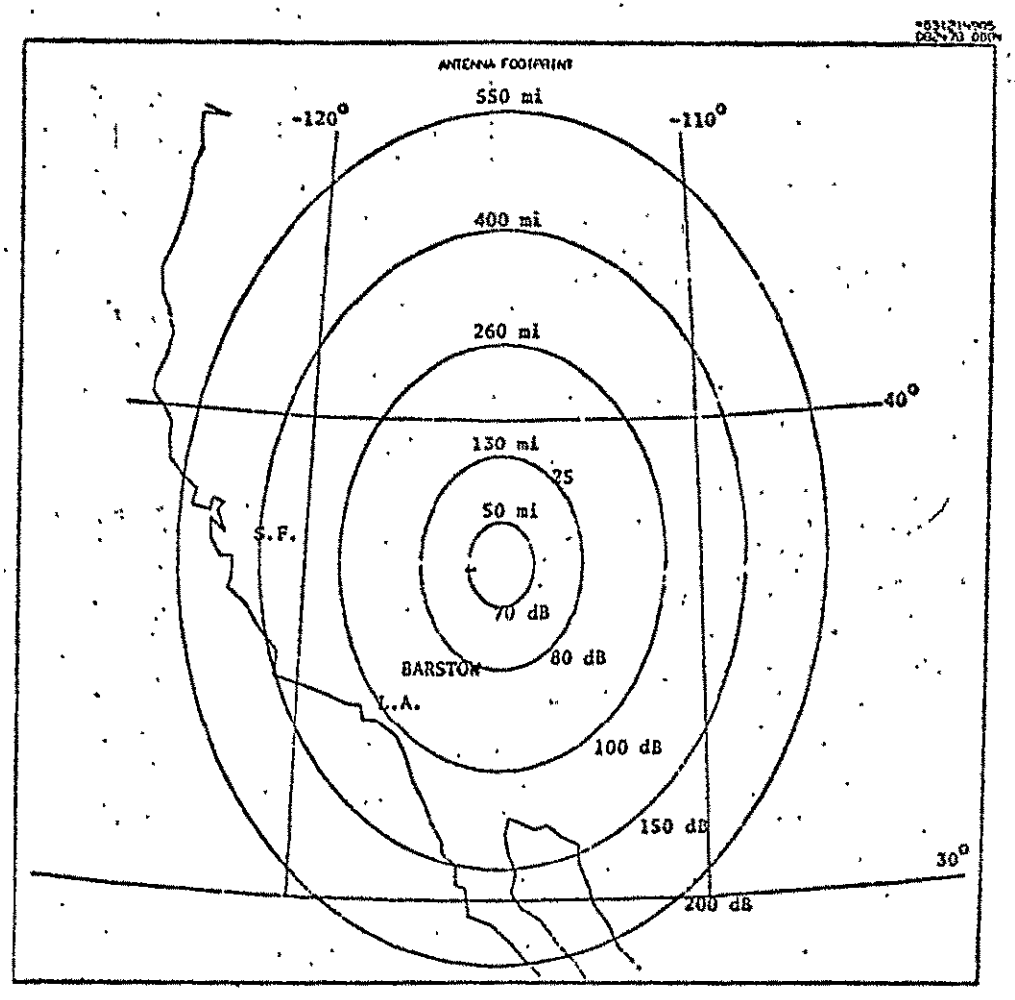

ORIGINAL PAGE IS OF POOR QUALITY

98PD131777

SOLID STATE DEVICES

ORIGINAL PAGE IS
OF POOR QUALITY

PRECEDING PAGE BLANK NOT FILMED

SOLID STATE AMPLIFIER TRANSISTOR CANDIDATES

Four basic transistor types can be considered as potential candidates for the solid state power module.

SOLID STATE AMPLIFIER TRANSISTOR* CANDIDATES

TRANSISTOR CANDIDATE	ADVANTAGE	DISADVANTAGE
GaAs BIPOLAR	- HIGH BREAKDOWN VOLTAGE (~ 40v)	- SLIGHTLY LOWER POWER & GAIN COMPARED WITH GaAs FET
GaAs FET	- HIGH POWER & GAIN	- LOWEST BREAKDOWN VOLTAGE (~ 25v) - SURFACE EFFECT LIMITATIONS
GaAs STATIC INDUCTION TRANSISTOR	- HIGHEST BREAKDOWN VOLTAGE POTENTIAL (~ 70v)	- OUTPUT POWERS ARE LOW WITH PRESENT DEVICES
HETEROJUNCTION BIPOLAR TRANSISTOR	- HIGHEST EFFICIENCY POTENTIAL - HIGH OUTPUT POWER POTENTIAL	- HIGHEST DEVELOPMENT COSTS

* APPEARS TO BE THE ONLY SOLID STATE DEVICE CAPABLE OF MEETING THE HIGH EFFICIENCY REQUIREMENTS.

COMPARISON OF GaAs BIPOLAR AND GaAs FET PROJECTED PERFORMANCE PARAMETERS

The projected transistor performance parameters can be estimated from previous performance projections.

ORIGINAL PAGE IS
OF POOR QUALITY

COMPARISON OF GaAs BIPOLAR & GaAs FET PROJECTED PERFORMANCE PARAMETERS

Item	GaAs Bipolar	GaAs FET
• Power Output	90W	108W
• Efficiency *	≥ 78%	≤ 90%
• Spurious Outputs Below Carrier	> 50 dB	> 50 dB
• Gain	20 dB	22 dB
• Voltage †	≤ 40 V	< 25 V
• Junction Temperature [180°C Ambient, θ = 1°C/W]	< 200°C [170°C Limit]	< 200°C [170°C Limit]
• Class ∓	C	E
• MTBF	< 11 Years [$J \leq 2 \cdot 10^4$ A/CM^2, T_J = 200°C]	< 12 Years [$J \leq 2 \cdot 10^4$ A/CM^2, T_J = 200°C]
• Radiation Hardness ∓		
Rads (Si)		
Neutron	$\leq 10^{15}$ N/CM.^{2}	
• 1 dB Compression Point (P_0)	130W	140W

* Transistors Will Require Internal Input/Output Matching Networks.

† High FET Source Drain Breakdown Voltage Requires Inlaid n^+ Source - Drain.

∓ Degradation In Fall Time Due to R-C (1-2Ω & 3 - 10pf) Favors Class C for Bipolar and Class E for FET.

∓ Abrupt Emitter-Base Junction & Optimum Base Width Will Increase Bipolar Hardness.

ORIGINAL PAGE IS OF POOR QUALITY

Rockwell International
68PD130730X

COMPARISON OF GaAs BIPOLAR AND GaAs FET PROJECTED PHYSICAL PARAMETERS

The projected transistor physical parameters can be estimated from present transistor physical profiles.

COMPARISON OF GaAs BIPOLAR & GaAs FET PROJECTED PHYSICAL PARAMETERS

ITEM	GaAs BIPOLAR	GaAs FET
• Substrate material	GaAs, Sapphire, BeO or Spinel	GaAs, Sapphire, BeO or Spinel
• Chip Size	200 mil x 50 mil	300 mil x 100 mil
• Chip Thickness	8 mil (Thick GaAs)	10 mil (Thin GaAs)
• Geometry*	Interdigitated	Interdigitated
• Metallization Profile	Cr/Pt/Au, Au/Ge Ti/W/Au, Au/Sn, Au/Zn	AuGe/Pt (Thermal Aging) Ni/Au/Ge, Cr/Pt/Au, Au/Cr-Pt Al (per: Ti/W/Au (Burnout)
• Emitter or Gate Length	1.5μ	2.0μ (4.5μ channel)
• Emitter or Gate Width	60μ	≤ 5000μ
• Junction	Ion Implant	Inlaid N^+ source & drain*
• Doping	N^+ $2 \cdot 10^{18}$ cm^{-3} (3μ) N 10^{17} cm^{-3} (5μ)	N^+ region 3 10^{18} cm^{-3} N region (0.2μ thick) 10^{17} cm^{-3}
• Die-Package (if applicable)	BeO	BeO
• Number of Individual Cells	200 (60μ)	100 (250μ)

* Interdigitated chosen for lowest r_b', good ferquency response and output power and reasonable processing requirements.

\+ 20 250μ wide FETs connected in parallel ($\lambda/10$ limitation constrains individual gate widths.)

* For high source-drain breakdown voltage.

ORIGINAL PAGE IS OF POOR QUALITY

Rockwell International

68PD130731X

TRANSISTOR COLLECTOR BREAKDOWN VOLTAGE (VB_C)

This chart illustrates the functional relationship between the base width (W_B), epitaxial width (W_{EPI}) and doping concentration (N_A, N_O) of the various types of transistor configurations investigated.

TRANSISTOR COLLECTOR BREAKDOWN VOLTAGE (BV_C)

- THEORETICALLY, THE BASIC FORM OF BV_C SHOWS A FUNCTIONAL RELATIONSHIP BETWEEN BASE WIDTH (W_B), EPITAXIAL WIDTH (W_{EPI}) AND DOPING CONCENTRATION (N_A, N_D). IN GENERAL:

$$BV_C = \frac{e\, N_A\, W_B^2}{2\, \epsilon_r\, \epsilon_0} \qquad \text{(UNIFORM BASE ALLOY TRANSISTOR)}$$

$$BV_C = \frac{e}{\epsilon_r\, \epsilon_0}\left[N_A\, W_{EPI}\, W_B - \frac{\bar{N}_D\, W_{EPI}^2}{2} + \frac{N_A\, W_B^2}{2}\right] \text{(DOUBLE DIFFUSED TRANSISTOR)}$$

- FOR OPTIMUM CONDITIONS WITH THE DOUBLE DIFFUSED TRANSISTOR:

$$W_{EPI\ (OPT)} = \frac{N_A\, W_B}{N_D}$$

$$BV_C \approx \frac{e\, N_A\, W_B^2}{2\, \epsilon_r\, \epsilon_0} \qquad (N_A \approx 2\cdot 10^{19}/cm^3,\ N_D \approx 5\cdot 10^{20}/cm^3)$$

- IF W_B IS APPROXIMATELY 4μ AND ϵ_r IS 12:

$$BV_C \approx 25V$$

- IT IS READILY APPARENT THAT THE TRANSISTOR BREAKDOWN VOLTAGE IS A FUNCTION OF DOPING AND DEVICE STRUCTURE.

ORIGINAL PAGE IS OF POOR QUALITY

FLOW CHART - GENERAL METHOD

This chart is self-explanatory.

FLOW CHART - GENERAL METHOD

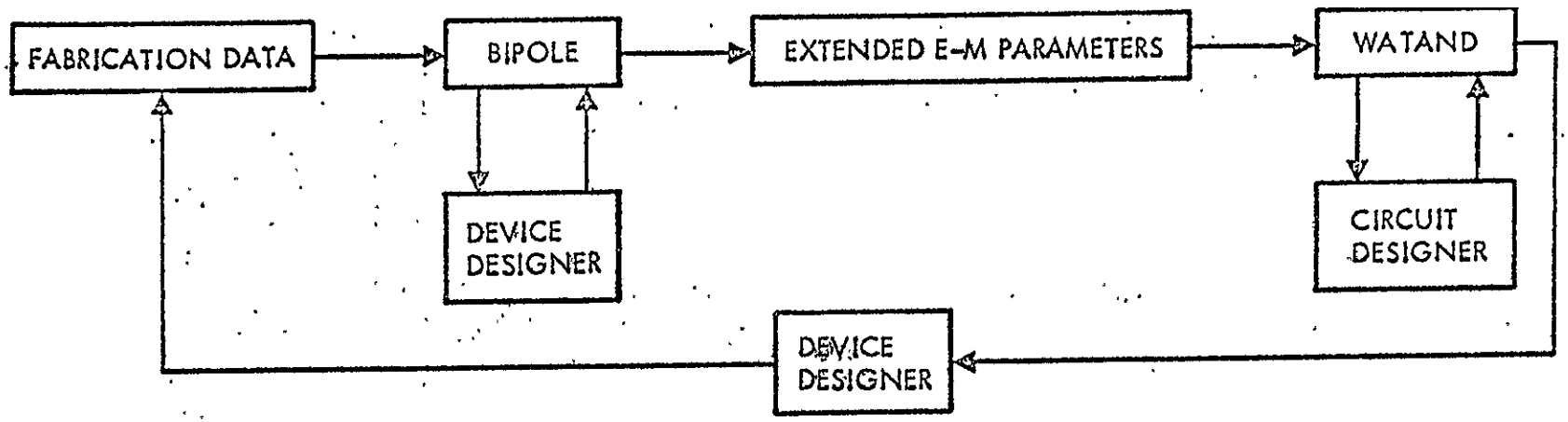

ORIGINAL PAGE IS OF POOR QUALITY

SUMMARY SPECIFICATION AND PERFORMANCE DATA

This chart summarizes the parametric data utilized during the various computer simulations as well as establishing power outputs for each of the transistor configurations studied.

SUMMARY SPECIFICATION AND PERFORMANCE DATA

	Units	Si (915 MHz)	Si (2.45 GHz)	GaAs (2.45 GHz)	LFP
B	cm	1.0	1.33	1.33	2.46
L	μm	2.0	1.5	1.5	260
X_{epi}	μm	3.5	2.0	2.00	80
N_{epi}	cm^{-3}	8×10^{15}	2.5×10^{16}	2.5×10^{16}	0.9×10^{14}
X_{j1}	μm	0.3	0.20	0.147	7.5
X_{j2}	μm	0.6	0.37	0.429	19.0
ρe_e/sq	ohm	22	31	93.9	0.44
ρe_b/sq	ohm	311	447	1520	75.5
ρe_{be}/sq	ohm	2640	3530	2170	419.0
V_{cbr}	V	62.7	31.7	33.	1340
V_{ebr}	V	6.3	6.5	—	12.8
I_k	A	2.8	8.8	8.8	10.1
X_{jbim}	μm	0.4	0.22	0.22	–
N_{jbim}	cm^{-3}	1×10^{18}	2.0×10^{18}	2×10^{18}	–
X_{bim}	μm	0.07	0.05	0.10	–
$f_{t\,max}$	GHz	2.89	6.14	10.7	0.016
f_{mosc}	GHz max	19.1	19.9	19.4	0.110
W_{nom}	watts	22.	35.	36.	1690.

Note: For the implanted profiles

$$X_{bim} = \sqrt{2}\,\sigma,$$
$$N_{jbim} = \phi/(\sqrt{2\pi}\,\sigma)$$
$$X_{bim} = x_p$$
$$n(x) = [\phi/\sqrt{2\pi}\sigma]\,\exp-[(x - x_p)/\sqrt{2}\sigma]^2$$

ORIGINAL PAGE IS OF POOR QUALITY

118PD132974

CIRCUIT SCHEMATIC MODELS USED IN STUDY

This chart is self-explanatory.

CIRCUIT SCHEMATIC MODELS USED IN STUDY

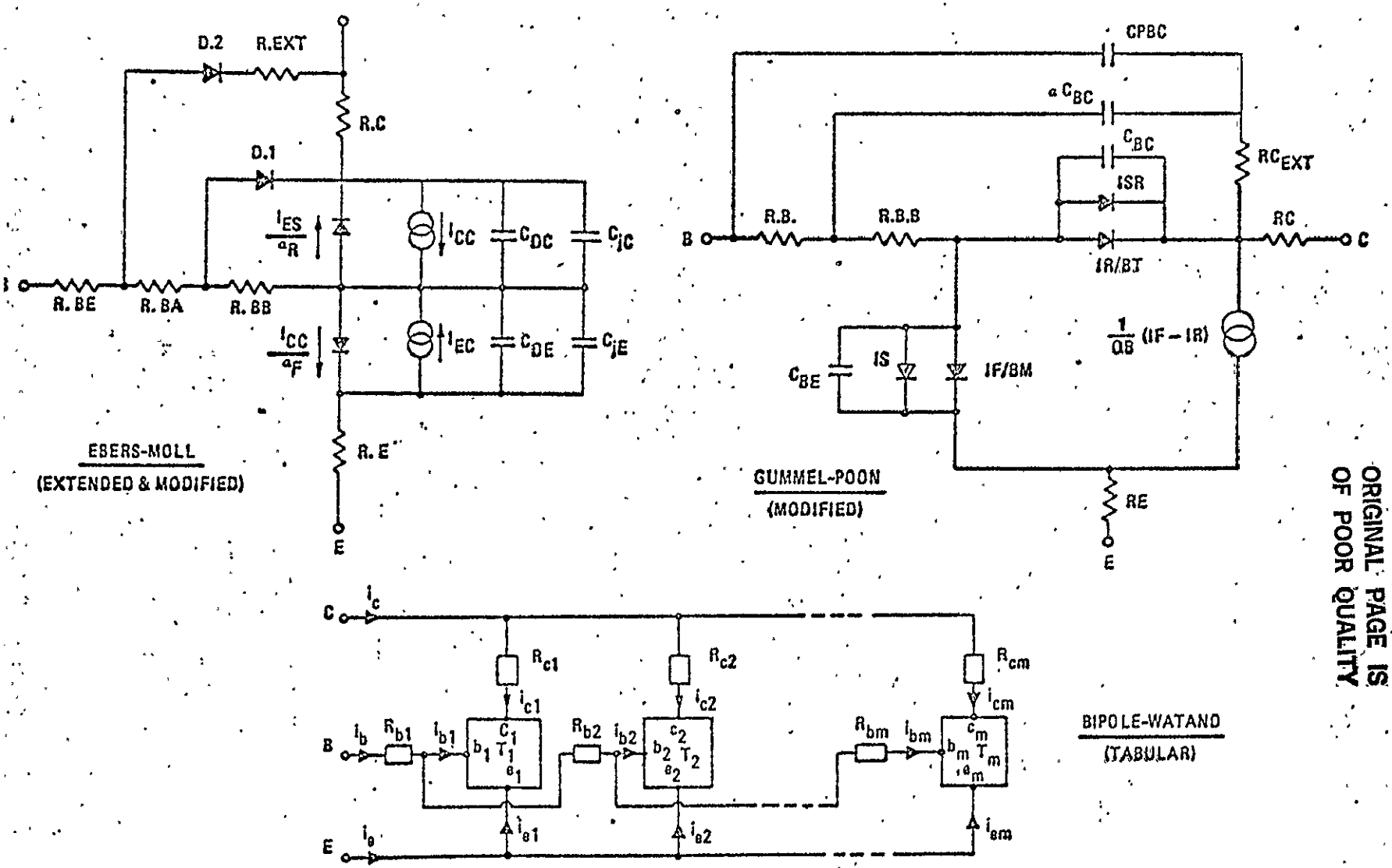

ORIGINAL PAGE IS OF POOR QUALITY

HIGH TEMPERATURE STUDY (SILICON, 2.45 GHz)
BIPOLE-WATAND

This chart shows the results if a high temperature study using BIPOLE-WATAND for the silicon transistor at 2.45 GHz. The value of collector resistance is indicated at each temperature.

HIGH TEMPERATURE STUDY (SILICON, 2.45 GHz)
BIPOLE-WATAND

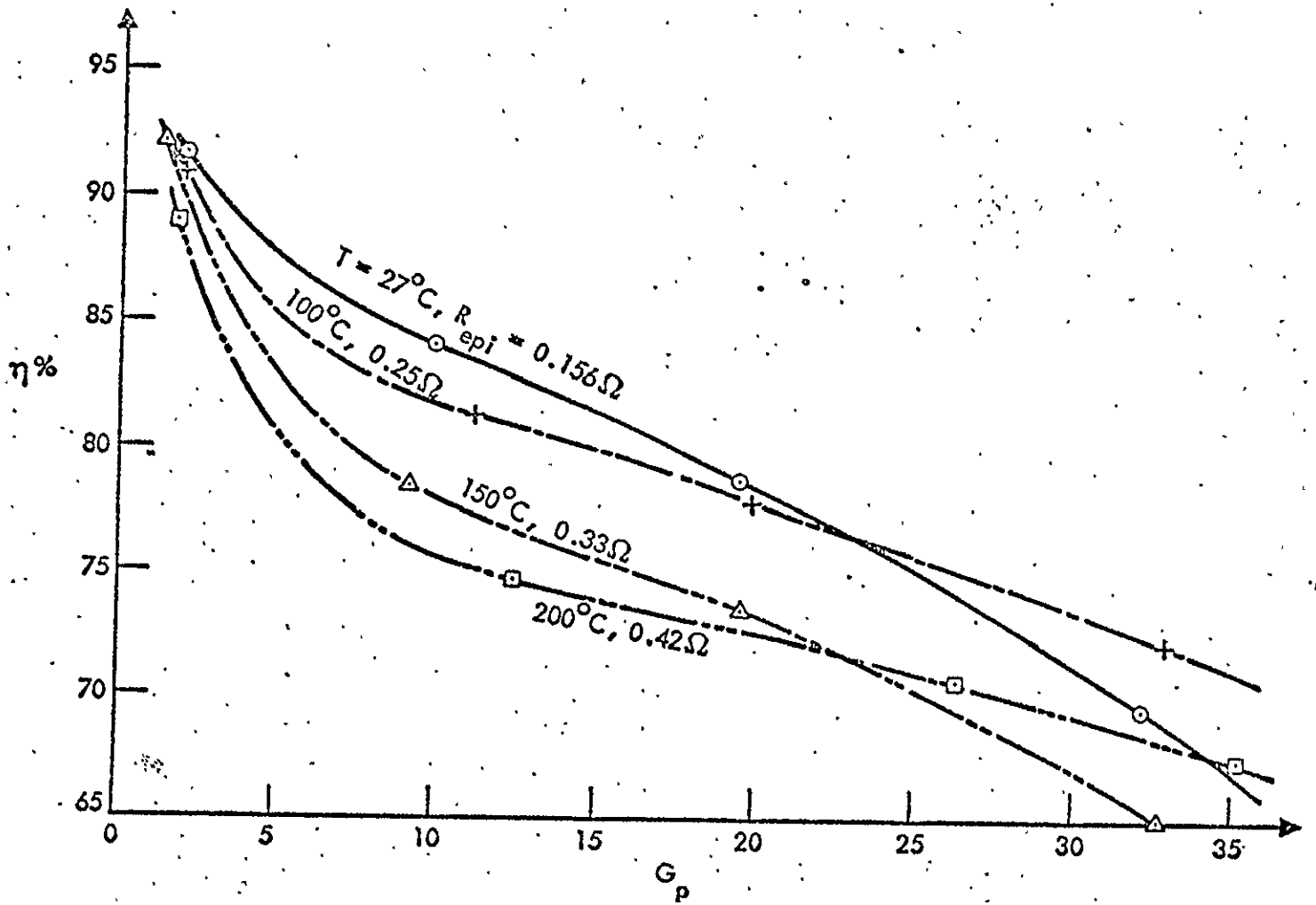

ORIGINAL PAGE IS OF POOR QUALITY

HIGH TEMPERATURE STUDY (GaAs, 2.45 GHz)
BIPOLE-WATAND

This chart shows the results of a high temperature study using BIPOLE-WATAND for the GaAs transistor at 2.45 GHz. Collector resistance is shown at each temperature.

HIGH TEMPERATURE STUDY (GaAs, 2.45 GHz)
BIPOLE-WATAND

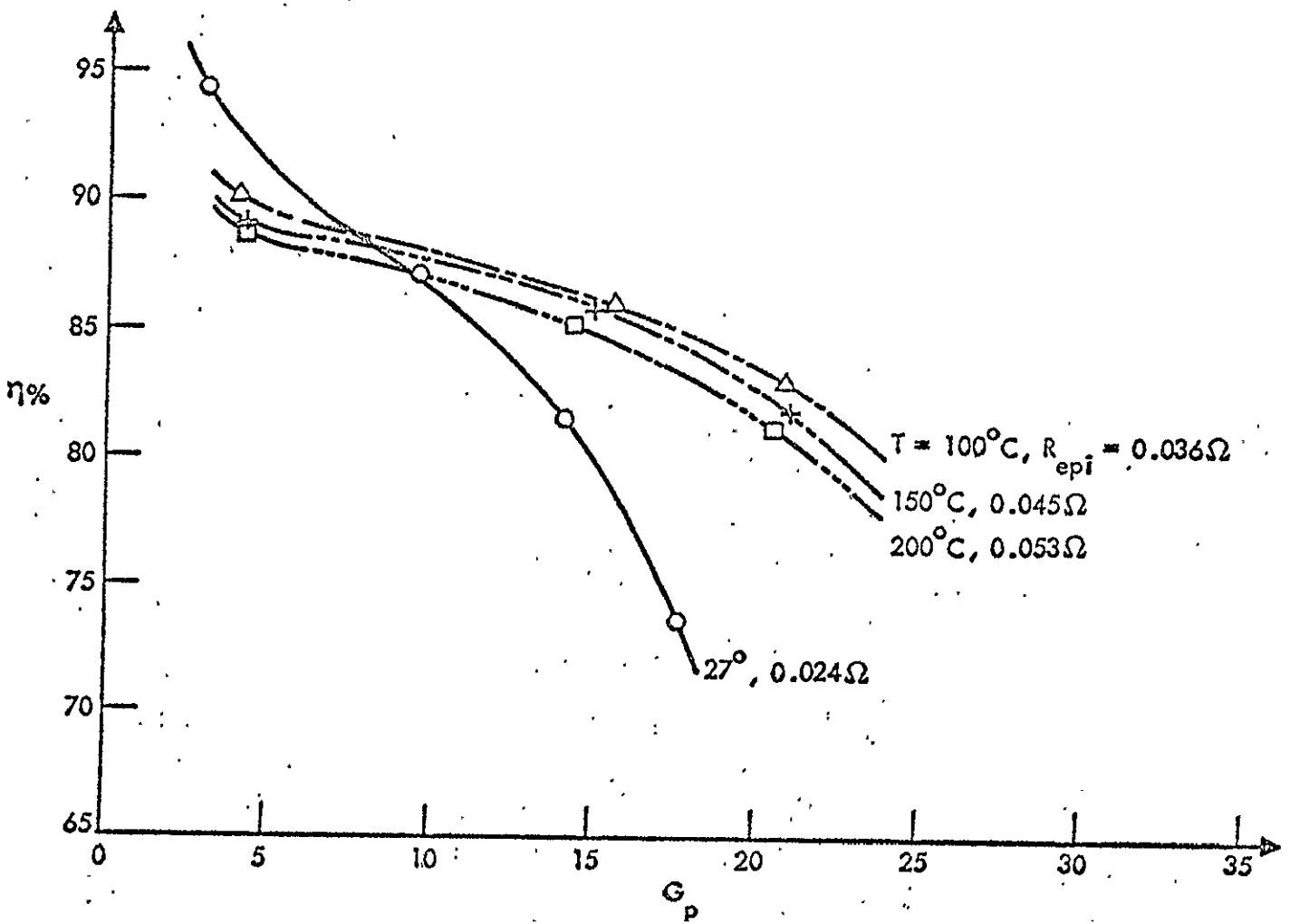

RECTENNA STUDIES

ORIGINAL PAGE IS
OF POOR QUALITY

PRECEDING PAGE BLANK NOT FILMED

OPERATIONAL GROUND RECEIVING FACILITY (RECTENNA) TYPICAL

This perspective is a representation of a typical operational ground site. The receiving panels are arranged in rows within the inner ellipse. Immediately outside the eclipse is a series of power poles which carry the 40 kV dc buses around the perimeter of the panel installation. The 500 kV ac towers also ring the basic ellipse, but at a greater distance. The power conversion stations are located between the two arrays of power transmission lines. The entire site is fenced in for security as shown.

OPERATIONAL GROUND RECEIVING FACILITY (RECTENNA) - TYPICAL

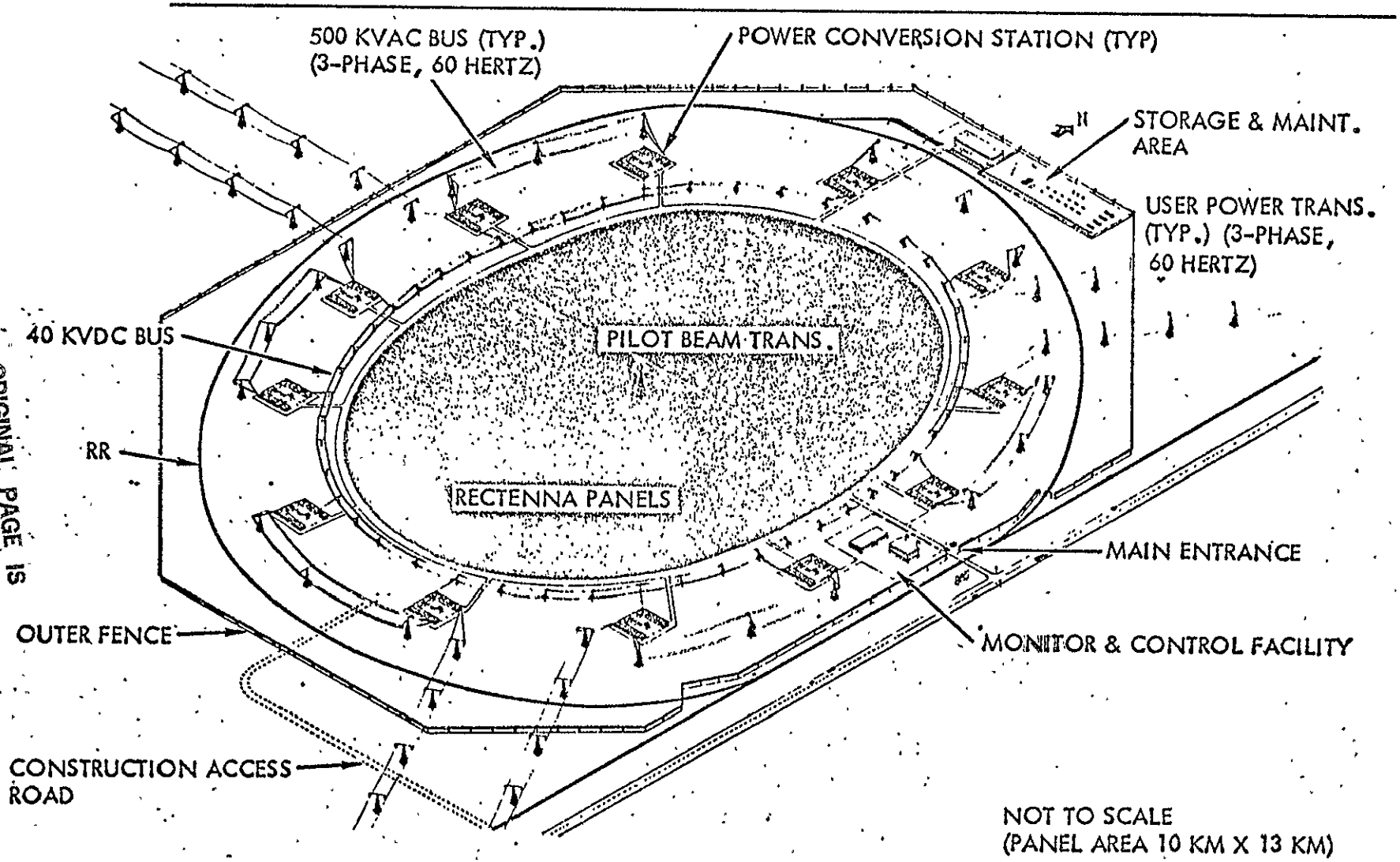

ORIGINAL PAGE IS OF POOR QUALITY

PANEL INSTALLATION

The panels are secured to two continuous concrete footings. A trade-off which considered eight individual footings versus continuous footings was made. A maximum wind force of 90 m/hr was assumed. It was determined that the amount of concrete required for either approach was essentially the same, but that the continuous footing concept was easier to install.

Each panel is secured to the footings at eight locations by fixtures which are imbedded in the concrete during the pouring operation. Mounting attachments which provide for longitudinal and lateral adjustment are secured to the fittings. Screw jacks on each of the rear attach points provide for panel adjustment and alignment.

The panel switch gears and feeder lines are mounted above ground behind each panel as shown, although it is recognized that either above or below ground runs for the feeders is feasible.

PANEL INSTALLATION

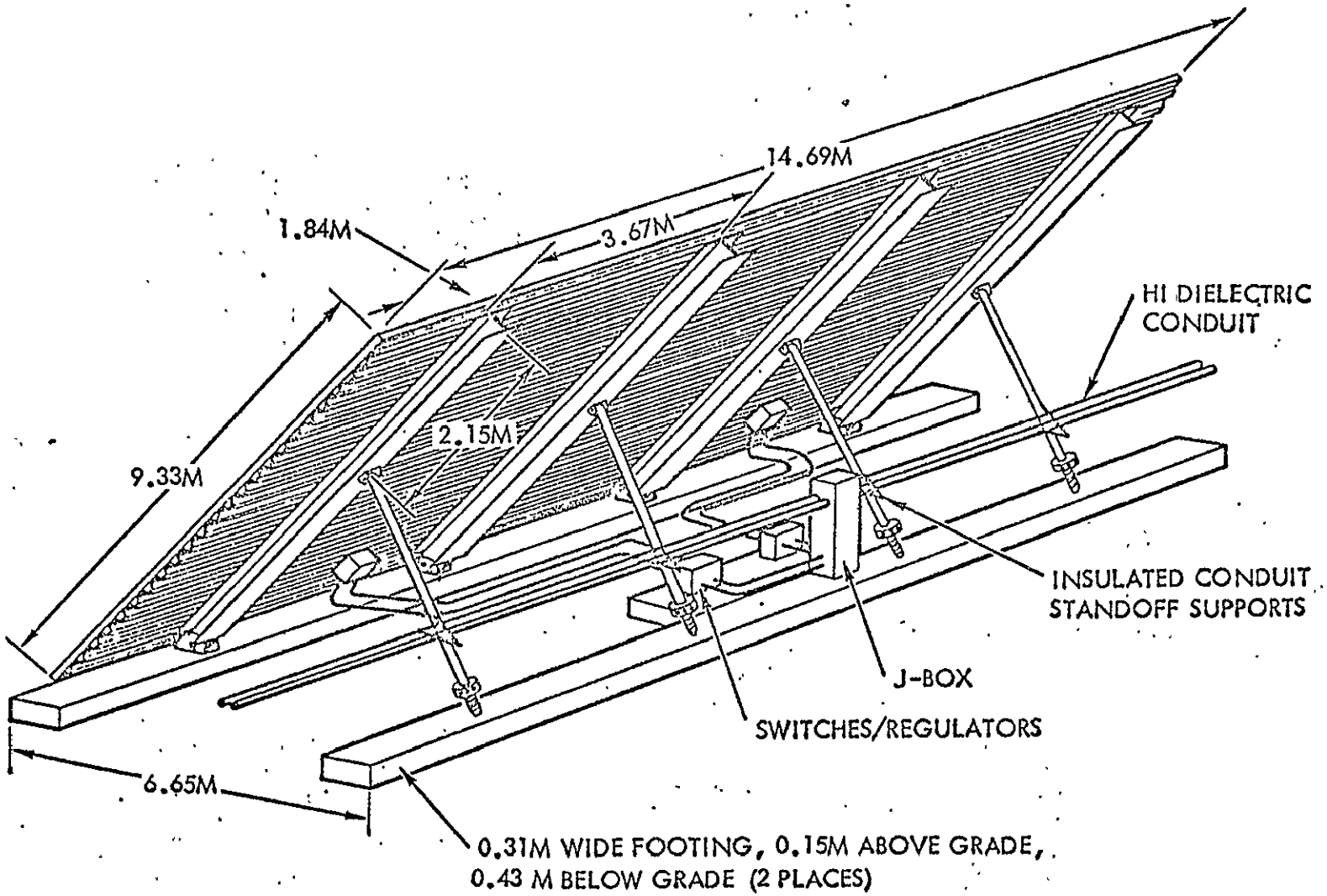

ORIGINAL PAGE IS OF POOR QUALITY

RECTENNA POWER DENSITY - PLAN VIEW
(34°N LATITUDE) - OCT. 18, 1978

This chart presents the average incident RF power levels in five zones of the SPS rectenna farm. This farm is assumed to be located at 30°N Latitude and at 0 Longitude relative to the SPS satellite. Total incident power at the receiving dipoles is defined as 5.53 GW and irradiates 102.1 km^2 of panel surface area. Total number of individual panels exceeds 580,000. Voltage strings (series rectifier circuit) output 40.5 kV @ 0.321 amps. Total number of rectifier diodes (assuming a single diode type) exceeds 330×10^6.

RECTENNA POWER DENSITY PATTERN - PLAN VIEW
(34° N LATITUDE) - OCT. 18, 1978

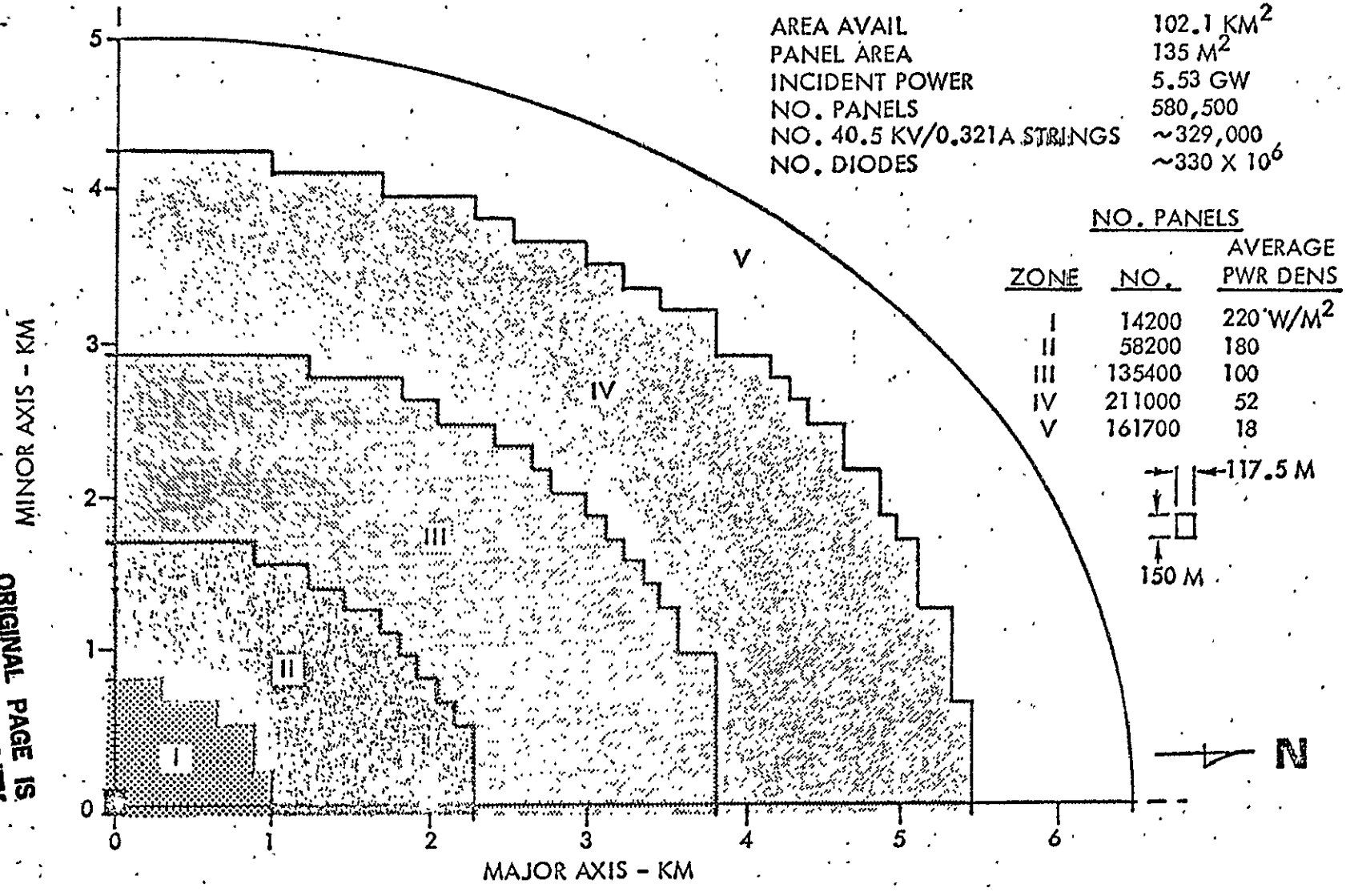

AREA AVAIL	102.1 KM^2
PANEL AREA	135 M^2
INCIDENT POWER	5.53 GW
NO. PANELS	580,500
NO. 40.5 KV/0.321A STRINGS	~329,000
NO. DIODES	~330 X 10^6

NO. PANELS

ZONE	NO.	AVERAGE PWR DENS
I	14200	220 W/M^2
II	58200	180
III	135400	100
IV	211000	52
V	161700	18

ORIGINAL PAGE IS OF POOR QUALITY

RECTENNA CONCEPTS

The basic objective of this study was to establish feasible receiving/rectifying antenna (rectenna) concepts that would establish overall losses of less than 2%. Five areas of potential losses were considered: 1) I^2R losses between the RF dipoles and the rectifier circuits, 2) beam width associated losses, 3) aperature losses, 4) diode losses, and 5) off-axis losses. I^2R losses are controlled by limiting path lengths; beam width is maximized and aperature losses are minimized by controlling the number and pattern of the dipole clusters, and finally diode loss effects are minimized by proper selection of the diode operating wattage.

Concurrently, costs must be minimized by reducing the total number of components in the rectenna field.

RECTENNA CONCEPTS

OBJECTIVES:

MINIMIZE LOSSES (GOAL <2% LOSS)	OFF AXIS	BEAMWIDTH>3° @ 2% POINT (19.5° @ 3 DB POINT)
	APERTURE	ARRAY LESS THAN PARABOLA
	ELEMENT INTERCONNECT	DETAIL DESIGN
	DIODE	> 6 W/DIODE
MINIMIZE COST	MINIMUM NUMBER OF ELEMENTS	

ALTERNATIVE RECTENNA CONCEPT

This chart illustrates the five antenna concepts that were considered. The data shown is self-explanatory.

ALTERNATIVE RECTENNA CONCEPT

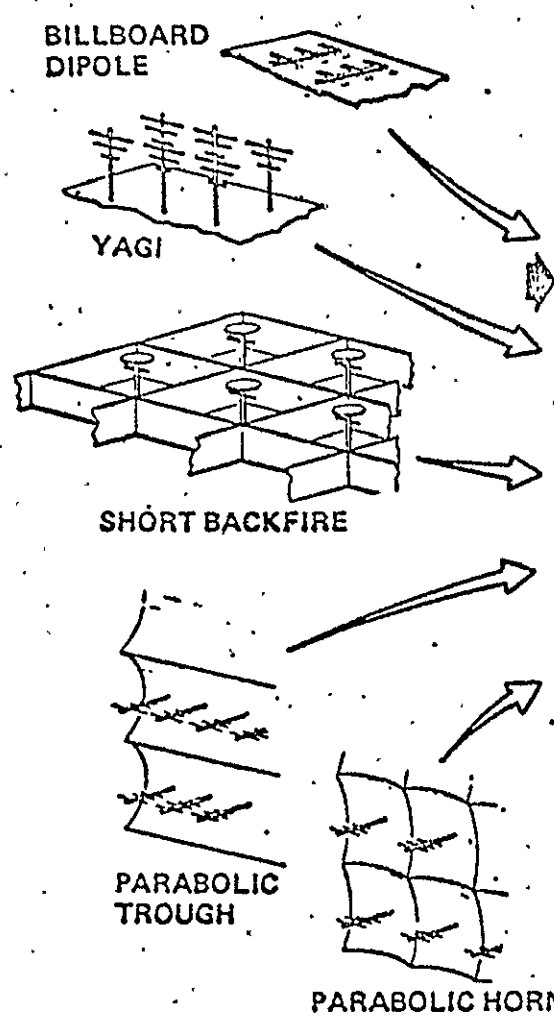

CONCEPT	NUMBER OF ELEMENTS (9 X 15 M AREA)	DESCRIPTION	COMMENTS
DENSE ARRAY (BILLBOARD)	36044	DIPOLES, $\lambda/2$ SPACING SQUARE CLUSTERS OF 49 ELEMENTS	STRIPLINE INTERCONNECT 0.5% MATCHING LOSS } NEEDS STUDY EDGE EFFECTS } NEEDS STUDY I^2R LOSS – 0.5% TO 5.5 KM
YAGI ARRAY	9011	λ SPACING, RECTANGULAR CLUSTERS OF 12 ELEMENTS	MUTUAL COUPLING EFFECT NEEDS STUDY
SHORT BACKFIRE ARRAY	2254	2λ SPACING, SQUARE CLUSTERS OF 4 ELEMENTS	BEAMWIDTH SLIGHTLY TOO NARROW NEEDS STUDY
TROUGH	2205	18 PARABOLIC TROUGHS YAGI FEEDS SPACED λ	APERTURE EFFICIENCY <80%
SQUARE PARABOLAS	540	540 PARABOLAS YAGI FED	APERTURE EFFICIENCY <70%

ORIGINAL PAGE IS OF POOR QUALITY

POLARIZATION CONSIDERATIONS

This chart is self-explanatory.

POLARIZATION CONSIDERATIONS

FARADAY ROTATION (HANDBOOK OF GEOPHYSICS AND SPACE ENVIRONMENT)

TYPICAL $\Omega = 450°$ TO $3600°$ AT 100 MHZ - DIURNAL VARIATION

$$\Omega \propto \frac{1}{f^2}$$

AT 2.45 GHZ

TYPICAL $\Omega = .75°$ TO $6°$

IF UNCORRECTED LOSS = .024 DB = .55%

POSSIBLY LARGER UNDER ATYPICAL CONDITIONS

ORIGINAL PAGE IS
OF POOR QUALITY

MPTS SIGNIFICANT STUDY FINDINGS

- SOLID STATE CONCEPT STRONG CONTENDER TO KLYSTRON BASELINE
- SILICON BIPOLAR DEVICES WILL NOT MEET TEMPERATURE REQUIREMENTS
- SOLID STATE LOWER POWER, LIGHTWEIGHT SPS POTENTIAL KEY TO LOWER COST PER KW

ORIGINAL PAGE IS OF POOR QUALITY

PRECEDING PAGE BLANK NOT FILMED

LASER ENVIRONMENTAL IMPACT STUDY

OBJECTIVE

The major emphasis in this study was to establish whether the use of laser power transfer concepts would cause any adverse effects upon the intervening atmosphere during space-to-earth transmission. A secondary objective was to derive a candidate transmission system; defining a representative transmission concept, establishing a realistic atmospheric model, and defining a realizable ground receiver concept. A major guideline was that the approach selected was to assume a realistic probability of availability in the time period of interest (CFY 1990-2000).

Finally, several ancillary issues were examined to determine system applicability to the derived operating goals.

The study was performed for Rockwell International by R. E. Beverly III, PHD, Consulting Physicist, under direct subcontract.

LASER ENVIRONMENTAL IMPACT STUDY

OBJECTIVE

- EMPHASIS IS ON ENVIRONMENTAL IMPACT OF SPACE-TO-EARTH TRANSMISSION
- SECONDARY OBJECTIVE IS TO DERIVE RELEVANT CHARACTERISTICS FOR LASER POWER GENERATION, ATMOSPHERIC TRANSMISSION & RECEPTOR ELECTRICAL CONVERSION
- ANCILLARY ISSUES (BEAM SPREADING, SAFETY & SECURITY, MASS & VOLUME. TECH. GROWTH) ALSO ARE CONSIDERED

Study performed for Rockwell International by Dr. R. E. Beverly, III of Columbus, Ohio under subcontract M9M 8BNB-896662D.

INITIAL CONDITIONS

The initial conditions established by Rockwell is as shown on the facing chart. These conditions were selected to permit the establishment of a laser concept that could be considered in parallel with the reference microwave concept. The selection of CO or CO_2 Electric Discharge Laser (EDL) concepts was based upon the maturity of EDL approaches and the uncertainty of the availability of the more exotic and potentially more efficient concepts that have recently been discussed in the available literature.

INITIAL CONDITIONS

- OPERATIONAL ORBIT—GEO
- LASER (OR LASERS) TO BE GROUPED TO UTILIZE TOTAL OUTPUT OF BASELINE PHOTOVOLTAIC SYSTEM (9.4 GW)
- ZENITH ANGLE $\theta = 50°$
- ELECTRIC DISCHARGE LASER (EDL) TYPE SYSTEM CONSIDERED
  - CO OR CO_2 GAS TYPES
  - MORE ADVANCED TECHNOLOGY NEEDED FOR SPS APPLICATION

ORIGINAL PAGE IS OF POOR QUALITY

EOL LASER SYSTEM

A very simplified schematic block diagram of the various elements of the laser based system is shown in the facing diagram. The three (3) elements are defined as the satellite lasers, the atmosphere, and the ground receivers (receptors).

The satellite element consists of the basic power source, the laser, the laser support subsystems, and the thermal control subsystem (radiators). The ground element includes the recepter (in this case a thermal boiler), turbines and generators, and a power distribution system similar to existing hydro-electric or thermo-electric systems.

EDL LASER SYSTEM

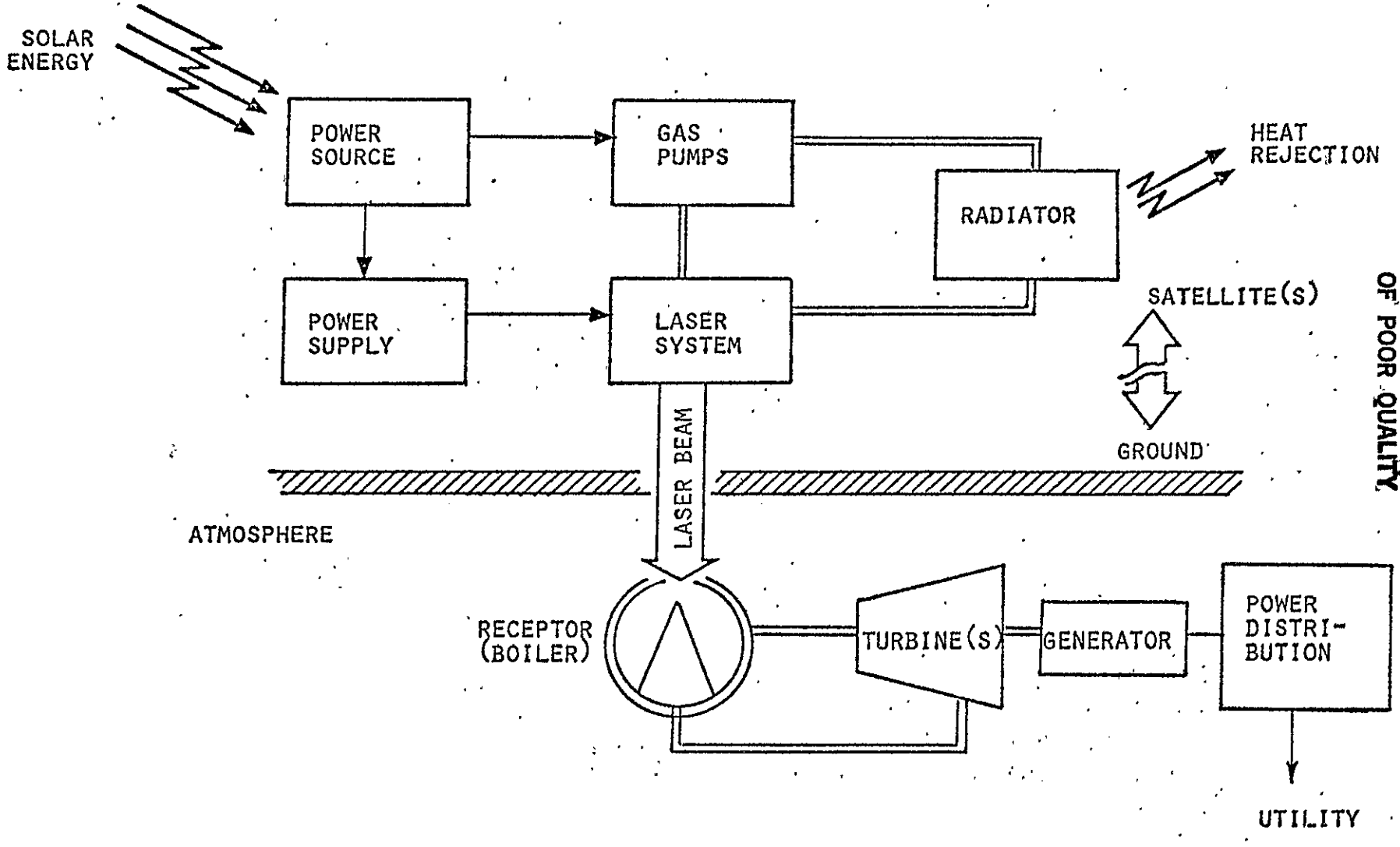

ORIGINAL PAGE IS OF POOR QUALITY

CW DISCHARGE CHARACTERISTICS

This chart is self-explanatory.

CW DISCHARGE CHARACTERISTICS

Discharge Type	Advantages	Disadvantages	Suitability	
			CO	CO_2
Self-sustained discharge	Simple, reliable, highly evolved technology; scaling behavior well understood	Low to moderate discharge efficiency; low specific and volumetric power loadings	No	Yes
Non-self-sustained discharge				
(1) Electron-beam-sustained discharge	Improved discharge efficiency; high specific and volumetric power loadings, scaling behavior understood	Poor reliability, X-ray hazards, complex maintenance, e-beam transmission foil blow out leads to a loss of lasant gases	Yes	Yes
(2) Pulser-sustainer discharge	Less complicated and smaller than e-beam-sustained devices; comparable volumetric and specific power loadings may be possible with further research; promises to be more reliable	Scalability to large devices not demonstrated, discharge efficiencies comparable to e-beam-sustained devices not yet achieved; technology not highly evolved	Yes	Yes

ORIGINAL PAGE IS OF POOR QUALITY

SPACE BASED LASER TRANSMITTER
PRINCIPLE OPTICAL CANDIDATES

The three most likely optical systems applicable to the laser satellite concept are shown on the facing chart. All are reflective, metal-surface optics because of the power densities involved.

The simplest concept, prime-focus, is considered unacceptable because of the significant beam spread due to diffraction when the obstruction (in this case the laser) is greater than 10% of the mirror diameter. With a mirror diameter of 25 m the laser beam would have to be less than 2.5 m in diameter.

The off-axis system suffers from the difficulty of configuring large-area off-axis mirror sections. Thus the cassigrain system has been selected for further design analysis.

The major disadvantage of the Cassegrain system is the requirement that the secondary (smaller) mirror be capable of withstanding vary large power densities (~3 kW/cm^2). The secondary mirror will thus require some form of active cooling. (In comparison, the primary mirror must accommodate power densities of the order of 10-20 W/cm^2).

SPACE-BASED LASER TRANSMITTER PRINCIPAL OPTICAL CANDIDATES

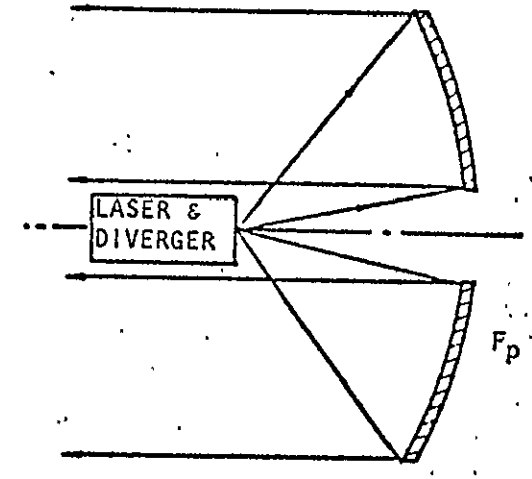

(a) PRIME-FOCUS SYSTEM

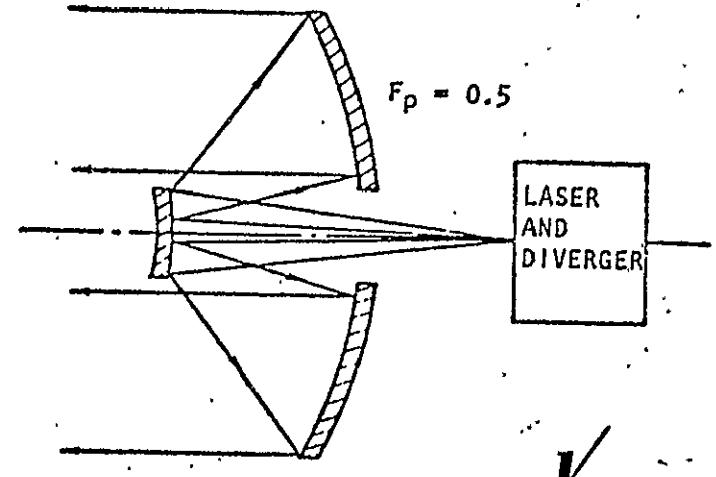

(b) CASSEGRAIN SYSTEM

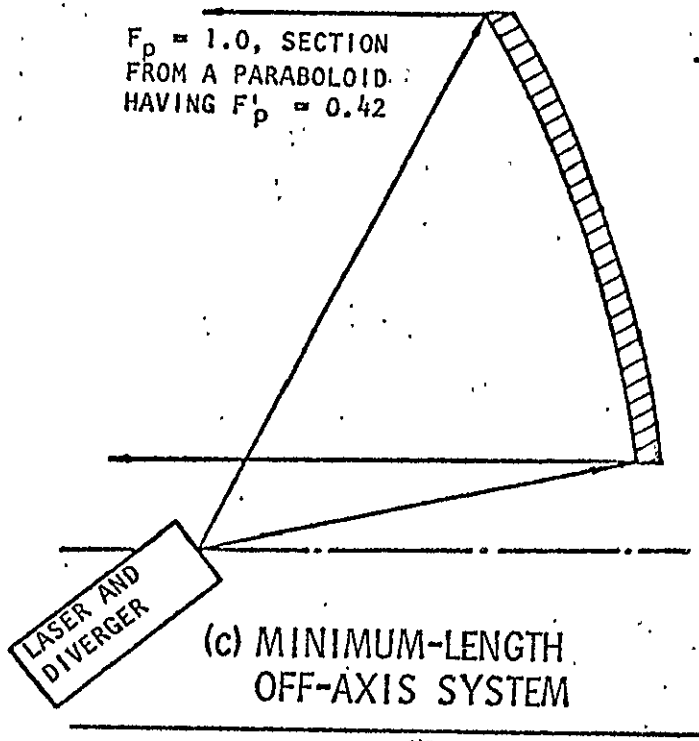

(c) MINIMUM-LENGTH OFF-AXIS SYSTEM

ORIGINAL PAGE IS OF POOR QUALITY

OPTICAL SYSTEM SPECIFICATIONS - PRELIMINARY

This chart presents a very preliminary estimate of the specification for a realizable laser optical system. A reasonable estimate for the required pointing accuracy (2×10^{-7} rad) has been included for reference.

OPTICAL SYSTEM SPECIFICATIONS—PRELIMINARY

- OPTICAL CONFIGURATION—CASSEGRAIN TELESCOPE
- PRIMARY MIRROR

  Composition: Be or BeCu/Ag overcoated
  Reflectivity: 0.9938
  Diameter, D_p = 25.0 m
  Average incident power density: ≃20 W/cm^2
  Thermal heat load (laser only): 1.3 kW/m^2
- SECONDARY MIRROR

  Composition: Cu/OCLI coating
  Reflectivity: 0.998
  Diameter, D_S = 2.00 m
  Average incident power density: ≃3 kW/cm^2
  Thermal heat load (laser only): 64 kW/m^2
  Cooling method: conduction
- CENTRAL OBSCURATION RATIO, ϵ = 0.08
- MIRROR FIGURE CONTROL—DEFORMABLE SURFACE
- TRANSMITTER EFFICIENCY—0.992
- POINTING ACCURACY—2 x 10^{-7} rad

ORIGINAL PAGE IS OF POOR QUALITY

ATMOSPHERIC TRANSMISSION

This chart presents, in summary, the conditions, influences, and effects of the atmosphere upon the transmitted laser power beam. Of major interest is the fact that of all the constituents of the atmospher only water vapor, and in certain locals, the pollutants, will have any significant effect. It is therefore reasonable to achieve higher transmission efficiencies when the receptor is located at significant elevations (e.g., on a mountain top). Of course this makes site selection even more difficult.

ATMOSPHERIC TRANSMISSION

ASSUMPTIONS

- STANDARD MIDLATITUDE ATMOSPHERIC CONDITIONS
- WAVELENGTH $\lambda(\mu m)$ 9.105 - 9.369
- $\theta = 50°$

MAJOR INFLUENCES

- WATER VAPOR
- POLLUTANTS

ABSORPTION EFFECTS

- AT 0.5 KM ELEVATION 81-98%
- AT 3.5 KM ELEVATION (MOUNTAIN TOP) 36-99%

CANDIDATE RECEPTOR CONCEPTS

This chart identifies four (4) receptor concept candidates. In the chart are summarized the data concerning type, efficiency, operating wavelength, stage of development and certain inherent limitations.

CANDIDATE RECEPTOR CONCEPTS

Candidate System	Type	Wave-length, μm	Efficiency	Dev. Stage	Limitations
• Photovoltaic cells					
HgCdTe	Semicond.	4-18	0.50	Research	Expensive; degradation by the terrestrial environment
PbSnTe	Semicond.	4-13	0.50	Research	
• Tuned optical diode	Semicond.	?	?	Research	Fragile; limited power handling capability
• Heat engines					
⇨ Boiler	Mechanical	UV thru IR	0.40	Advanced	—
Laser	Mechanical		0.50	Explor.	Window strength
Photon	Mechanical		0.60-0.75	Research	Lack of high-temperature materials, window strength
⇨ Energy exchanger/ binary cycle	Mechanical		0.75	Research	Scaling uncertain
• TELEC	Thermoelec.	Near to mid IR	0.42	Research	Scaling uncertain

ORIGINAL PAGE IS OF POOR QUALITY

GROUND RECEIVING STATION - LASER RECEPTOR HEAT ENGINE CONCEPT

This chart illustrates a simplified ground receiving station. The station system consists of a thermal receiver/converter, a turbine-generator set, and the appropriate power distribution elements (switchgear, relays, filters, buses, etc.).

The laser beam, which has been focused into a beam <30 m in diameter, is pointed into the receptor (boiler) opening where the contained heat is used to heat a metallic media into its fluid state. This moter metallic substance is then used, either directly, or with water (steam) as an intermediary fluid, to drive turbine-generators. The power density on the inside surface of the receptor is estimated to approach 35 kW/m^2 (~26 suns).

GROUND RECEIVING STATION—LASER RECEPTOR HEAT ENGINE CONCEPT

- BEAM DIAMETER ≈ 30 M
- POWER DENSITY ≈ 35 KW/M^2 (~26 SUNS) (INTERNAL SURFACE)

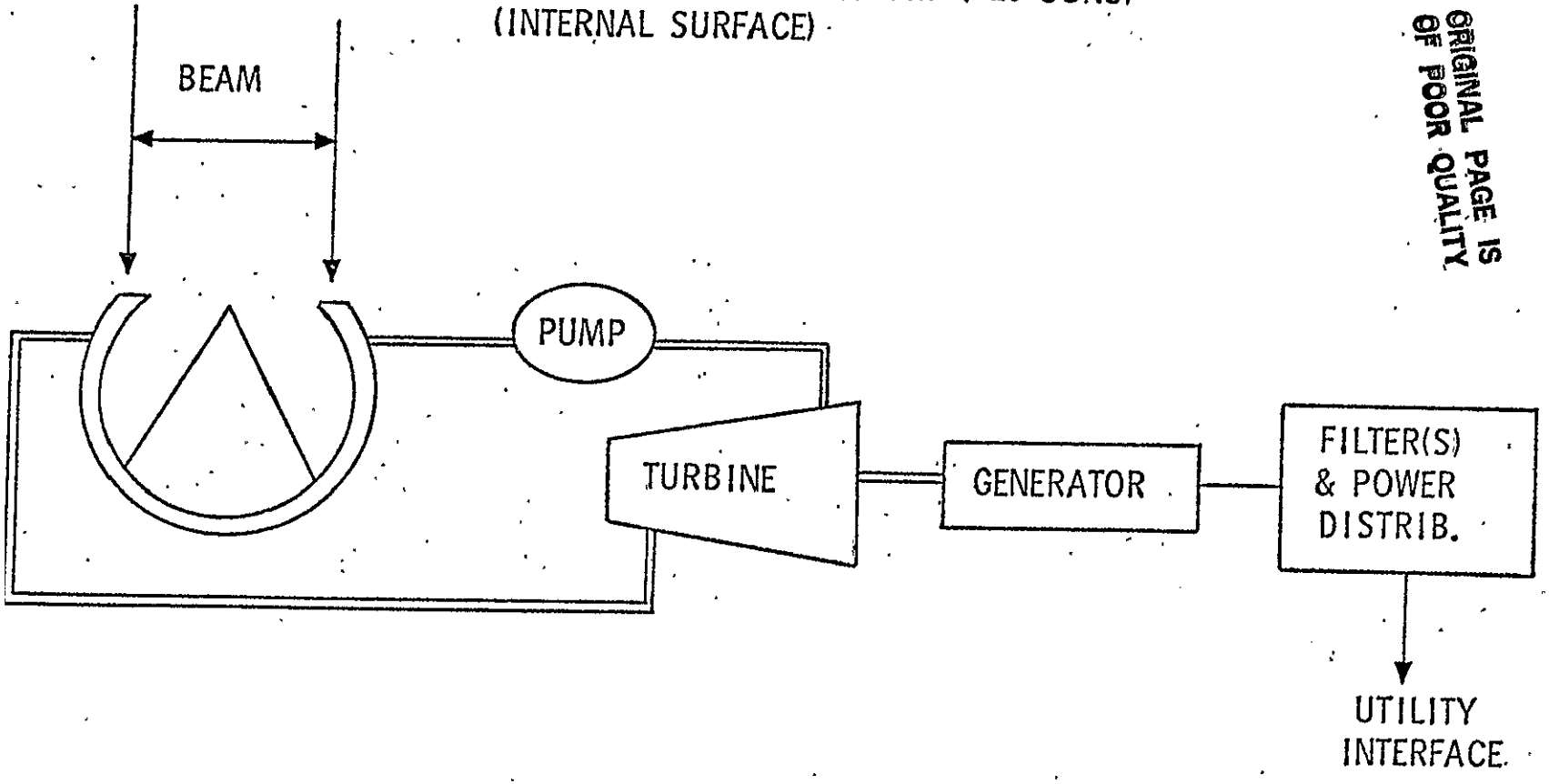

ORIGINAL PAGE IS OF POOR QUALITY

SELECTED SPS - LASER SYSTEM MODEL

This chart is self-explanatory.

SELECTED SPS LASER SYSTEM MODEL

- SUPERSONIC, CLOSED-CYCLE FLOW, CO ELECTRIC-DISCHARGE LASER WITH LINE SELECTION
- PULSER-SUSTAINER TYPE OF LASER DISCHARGE
- TOTAL OF 20 OR 24 INDEPENDENTLY CONTROLLABLE LASER SYSTEMS AND OPTICAL TRANSMITTERS, EACH WITH AN OUTPUT POWER OF $\simeq$100 MW
- ADAPTIVE, ON-AXIS CASSEGRAIN OPTICAL TRANSMITTER
- HEAT ENGINE RECEPTOR (EITHER ADVANCED BRAYTON CYCLE OR LOCKHEED ENERGY EXCHANGER WITH BINARY CYCLE)
- HIGH-ELEVATION RECEPTOR SITE PREFERRED
- OPERATION WITH CLOSELY PACKED RECEPTOR-DEVICE CLUSTERS LOCATED AT A COMMON SITE FEASIBLE WITH THE EXACT NUMBER OF RECEPTORS PER SITE DEPENDING UPON THE DESIRED POWER-PLANT ELECTRICAL RATING

ORIGINAL PAGE IS OF POOR QUALITY

SATELLITE POWER SYSTEMS (SPS)
LASER POWER TRANSMISSION

This chart depicts the antenna cluster mounted at the end of the reference photovoltaic concept. In this concept the basic structure of the antenna is assembled to be nearly identical in both cases.

Total power transmission from a single satellite is estimated to be approximately t.43 GW.

SATELLITE POWER SYSTEM (SPS) LASER POWER TRANSMISSION

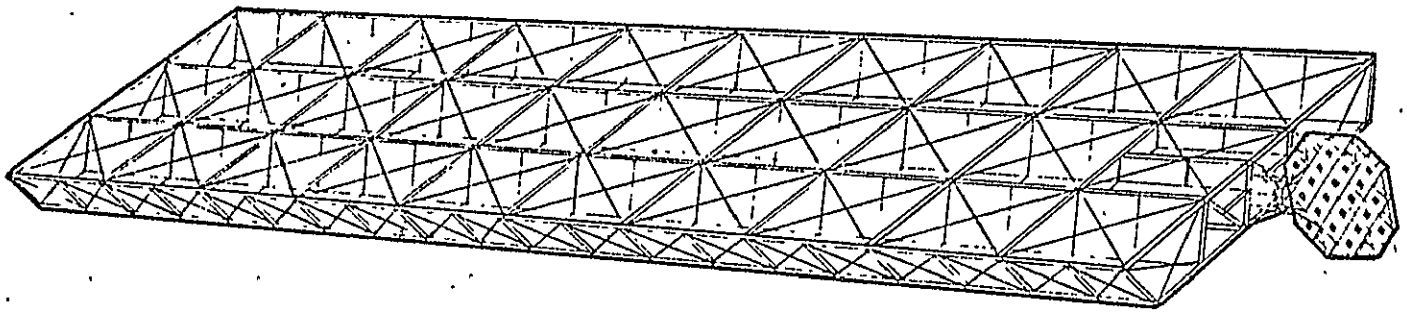

SOLAR CELL POWER	10 GW
POWER DISTRIBUTION EFFICIENCY	94%
LASER CONVERSION EFFICIENCY	15% (EST 1990)
TRANSMITTED POWER	1.43 GW

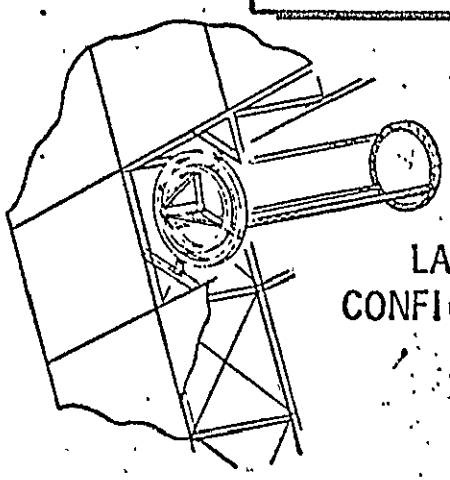

LASER CONFIGURATION

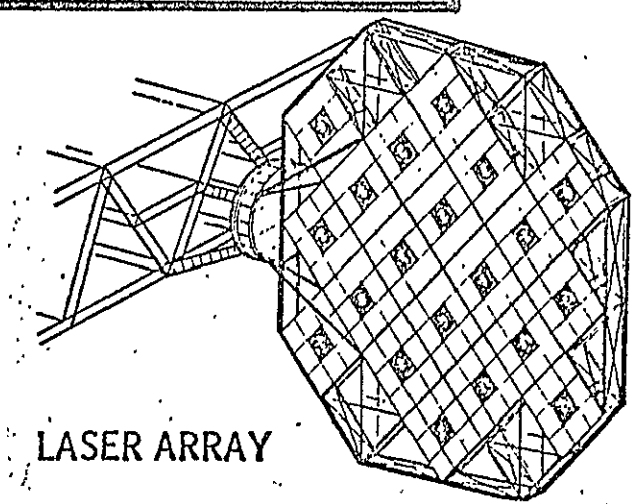

LASER ARRAY

ORIGINAL PAGE IS OF POOR QUALITY

LASER POWER TRANSMISSION - SPS SYSTEM EFFICIENCY CHAIN

This chart shows that the laser support subsystems immediately use up 49.9% of the available energy simply to condition the operating laser. Overall system efficiency (of the laser network and ground system only) is estimated to be less than 15.3%.

LASER POWER TRANSMISSION—SPS SYSTEM CHAIN EFFICIENCY

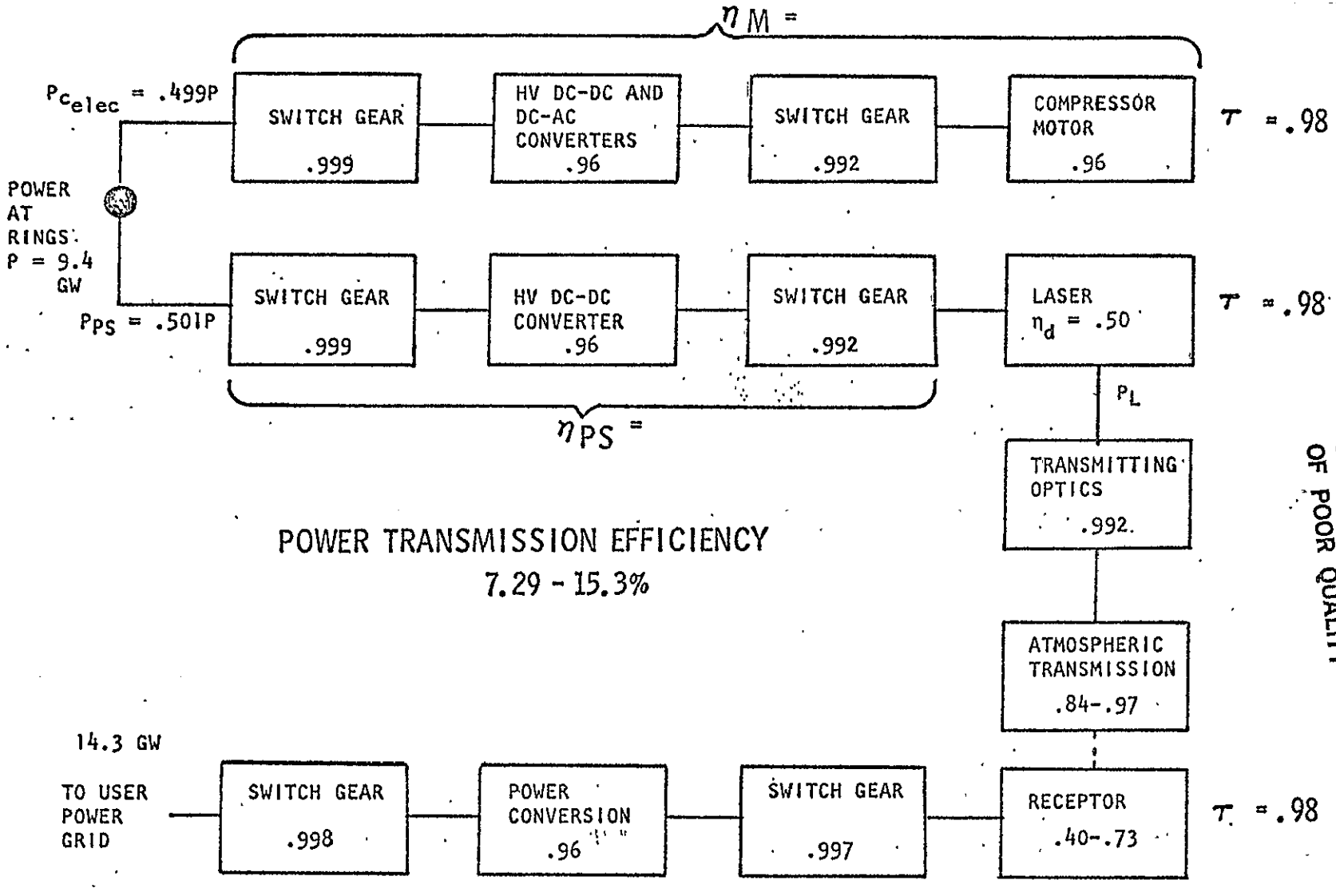

POWER TRANSMISSION EFFICIENCY
7.29 - 15.3%

ORIGINAL PAGE IS OF POOR QUALITY

ELECTRICAL, MECHANICAL AND THERMAL POWER

This chart summarizes the power estimates at various points of the satellite laser system for a system designed to handle either 20 or 24 independent lasers.

ELECTRICAL, MECHANICAL, AND THERMAL POWER CO EDL WITH SUPERSONIC GAS FLOW

Parameter	No. of Independent Laser Systems	
	20	24
Total power input per system	470.0 MW_e	392.0 MW_e
Laser output power, P_L	109.8 MW	91.61 MW
Compressor mechanical power, $P_{c_{mech}}$	209.7 MW_m	174.9 MW_m
Compressor electrical power, $P_{c_{elec}}$	234.3 MW_e	183.2 MW_e
Discharge electrical power, P_E	219.7 MW_e	183.2 MW_e
Discharge power supply power, P_{PS}	235.7 MW_e	196.5 MW_e
Waste heat power, Q_W	288.0 MW_{th}	240.3 MW_{th}
Space radiator area, A_r	78,830 m^2	65,750 m^2

ORIGINAL PAGE IS OF POOR QUALITY

LASER SYSTEM MASS ESTIMATES

This chart summarizes the total satellite laser system mass for the 20 and 24 laser unit approaches. Total mass is nearly identical (difference of less than 5000 kg, 0.017%). Specific mass for both concepts is estimated to be 13.3×10^3 kg/kW.

LASER SYSTEM MASS ESTIMATES

SUBSYSTEM DESCRIPTION	MASS (10^3 KG)/LASER SYSTEM	
	20 LASERS	24 LASERS
POWER SOURCES		
• Laser discharge power supply	471.4	393.2
• Compressor motor and power converter	585.8	488.5
COMPRESSOR	21.0	17.5
WASTE HEAT EXCHANGER	57.6	48.1
LASER FLUID, DUCTING, CHANNEL, AND OPTICS	146.8	122.4
SPACE WASTE-HEAT RADIATOR	157.7	131.5
TRANSMITTING OPTICS		
• Primary mirror	19.5	19.5
• Secondary mirror	1.1	1.1
TOTAL LASER SYSTEM MASS	1,460.9	1,221.8
TOTAL MASS FOR ALL SYSTEMS	29,218.0	29,323.2
MASS/RADIANT OUTPUT POWER (KG/KW)	13.3	13.3

ORIGINAL PAGE IS OF POOR QUALITY

SYSTEM MASS COMPARISON
CO (EDL) LASER VS KLYSTRON MICROWAVE TRANSMITTER

Assuming the same power availability for both concepts, a single satellite can transmit 6.79 GW and 2.196 GW of the microwave and laser concepts, respectively. This equals to efficiencies of 72.2 and 23.4%. If the total power requirements at the utility interface are firm the laser concept will require 186 satellites as compared to 60 for the reference baseline.

Since a major cost factor of the system is the cost of delivery of mass to orbit, the laser approach will increase launch costs to approximately 5.5 times the cost estimate for the microwave based approach.

SYSTEM MASS COMPARISON
CO (EDL) LASER VS. KLYSTRON MICROWAVE TRANSMITTER

	MICROWAVE	LASER
POWER		
INPUT (GW)	9.4	9.4
OUTPUT (GW)	6.79	2.196
EFFICIENCY (%)	72.2	23.4
MASS	(33.020)	(62.96)
POWER SOURCE (10^6 KG)	11.84	11.84
ANTENNA (10^6 KG)	14.532	38.484
STRUCTURE	(0.977)	(0.977)
POWER DISTRIBUTION	(4.505)	(4.505)
INFORMATION SYSTEMS	(0.630)	(0.630)
THERMAL	(1.405)	(3.154)
SUBARRAYS	(7.012)	(29.218)
CONTINGENCY (25%) (10^6 KG)	6.604	12.592
NUMBER OF SATELLITES ON ORBIT (BASED ON A RADIANT PWR AT ANT. OUTPUT)	60	186
TOTAL MASS TO GEO (10^6 KG)	1981	11,711
COST OF TRANSPORT TO ORBIT	N	5.91 N

ORIGINAL PAGE IS OF POOR QUALITY

ANCILLARY ISSUES

This chart is self-explanatory.

ANCILLARY ISSUES

- BEAM SPREADING

  NEGLIGIBLE

- SAFETY AND SECURITY

  - TRANSMISSION AIR ZONE RESTRICTED
    - OCULAR HAZARD DUE TO SPECULAR REFLECTIONS
    - SHUT-OFF RESPONSE TIME TOO SLOW (0.285 SEC)

- TECHNOLOGY

  (SEE NEXT CHART)

- MASS/VOLUME

  (PRIOR CHART)

ORIGINAL PAGE IS
OF POOR QUALITY

TECHNOLOGY GROWTH

Three major areas must be considered in terms of desired technology advancement or growth. The specific path selected depends, of course, upon the question of the eventual selection of new, theoretical approaches over those for which much technical data exists.

For example, if an EDL concept is selected the applicability of existing data to system scaled up by a factor of 1000 must be investigated. In addition the determination of a feasible method of cooling large-area transmissive windows at power levels on the order of 100 MW must be made. A third concern in the design of large scale EDL's is the ability to maintain and/or rejuvenate the active gases in the desired closed cycle system.

If a new concept such as direct solar pumping, or the so called free electron laser (FEL) is selected it becomes necessary to provide significant resources to proceed from the present theoretical status to a proven hardware status in an extremely short period of time (10 years).

Finally the examination of materials and techniques applicable to the ground elements must be initiated at the earliest possible time.

TECHNOLOGY GROWTH

CONSIDERABLE RESEARCH AND DEVELOPMENT REQUIRED FOR:

- EDL CONCEPTS
  - SCALING FACTORS OF 1000 IN OUTPUT POWER
  - COOLING METHODS FOR LARGE-AREA TRANSMISSIVE LASER WINDOW (INCIDENT POWER LEVEL ≈ 100 MW)
  - GAS PURIFICATION/REJUVINATION IN CLOSED-CYCLE SYSTEM
- NEW LASER CONCEPTS
  - DIRECT SOLAR PUMPED LASER
  - FREE-ELECTRON LASER (FEL)
- GROUND RECEPTOR/SYSTEM CONCEPTS
  - HIGH-TEMPERATURE MATERIALS/FLUIDS
  - ENERGY EXCHANGER/BINARY CYCLE
  - OTHER

SUMMARY OF ENVIRONMENTAL IMPACT ISSUES

This chart is self-explanatory.

SUMMARY OF ENVIRONMENTAL IMPACT ISSUES

- GLOBAL CLIMATIC CHANGE HIGHLY IMPROBABLE
- MESOSCALE WEATHER MODIFICATIONS AT RECEPTOR LOCATIONS LESS SIGNIFICANT THAN CONVENTIONAL OR NUCLEAR ELECTRIC POWER PLANTS OF COMPARABLE POWER RATING
- THERMAL HEATING OF THE LOWER TROPOSPHERE BY LASER BEAM WILL PROMOTE WASTE-HEAT DISPERSAL BY VERTICAL MIXING—SEVERE TURBULENCE HAZARD TO AIRCRAFT
- ENVIRONMENTAL IMPACT ON BIRDS & INSECTS UNCERTAIN
- LASER-PLASMA INTERACTIONS IN IONOSPHERE INSIGNIFICANT
- LASER-BEAM PERTURBATION OF PLASMA CHEMISTRY IN THE MESOSPHERE AND THERMOSPHERE BELIEVED OF NEGLIGIBLE MAGNITUDE AND CONSEQUENCE —CONFIRMING RESEARCH NEEDED
- SERIOUS ENVIRONMENTAL MODIFICATIONS SUCH AS DEPLETION OF THE OZONE CONCENTRATION IN THE STRATOSPHERE NOT POSSIBLE

STUDY CONCLUSIONS

This chart is self-explanatory.

STUDY CONCLUSIONS

- CURRENT STATE-OF-THE-ART SUPERSONIC-FLOW CO EDL CAPABLE OF ACHIEVING THE HIGHEST TOTAL SPS LASER TRANSMISSION EFFICIENCY ($\simeq$16%)
- SIGNIFICANT TECHNOLOGY IMPROVEMENT NECESSARY TO REALIZE CLOSED-CYCLE LASER DEVICE CAPABLE OF PERFORMANCE GOALS
- TWO VIABLE RECEPTOR CONCEPTS IDENTIFIED WHICH PROJECT LASER ENERGY CONVERSION EFFICIENCIES OF 40 TO 73%
- HIGH-ELEVATION RECEPTOR SITES PREFERRED, FROM ENVIRONMENTAL AND SYSTEM EFFICIENCY STANDPOINTS
- RESTRICTION OF AIRCRAFT FOR SAFETY MAY HAVE SERIOUS CONSEQUENCES —NEEDS STUDY TO DETERMINE FEASIBILITY & IMPACT
- NO EFFECTS COULD BE FOUND WHICH PRESENT A REAL DANGER OF SERIOUS INJURY TO THE ENVIRONMENT—ENVIRONMENTAL IMPACT ON BIRDS & INSECTS POTENTIALLY A PROBLEM WHICH NEEDS FURTHER ASSESSMENT

RECOMMENDATIONS

This chart is self-explanatory.

RECOMMENDATIONS

- BECAUSE OF LOW SYSTEM EFFICIENCY & LARGE SPECIFIC MASS OF THE CURRENT PHOTOVOLTAIC-EDL SPS CONCEPT, FUTURE EFFORT NEEDS TO ADDRESS FEASIBILITY OF ADVANCED LASER SYSTEMS IN SPS TIME FRAME.
- POSSIBLE PERTURBATIONS OF UPPER-ATMOSPHERE PLASMA CHEMISTRY BY AN INTENSE IR-PHOTO FLUX NEEDS MORE DETAILED ANALYSIS
- FEASIBILITY AND IMPACT OF AIRCRAFT RESTRICTIONS NEED FURTHER STUDY.
- IMPACT ON BIRDS AND INSECTS SHOULD BE EVALUATED FURTHER

EXECUTIVE SUMMARY

G. M. HANLEY

DESIGN DEFINITION

- REFERENCE CONCEPT - A. A. NUSSBERGER
- SOLID-STATE CONCEPTS - W. V. McRAE
- MICROWAVE TRANSMISSION SYSTEM - C. Y. TOMITA
- LASER ENVIRONMENTAL STUDY - G. M. HANLEY

CONSTRUCTION & OPERATIONS

- R. F. WADSWORTH

TRANSPORTATION SYSTEM DEFIN.

- R. P. BERGERON

PROGRAM AND COST DATA

- F. W. VON FLUE

PRECEDING PAGE BLANK NOT FILMED

OPERATIONS ANALYSIS

- CONFIGURATION AND CONSTRUCTION OPTIONS
- SERPENTINE CONSTRUCTION CONCEPT
- REFERENCE CONFIGURATION CONCEPT
- PRECURSOR OPERATIONS
- RECTENNA CONSTRUCTION

PRECEDING PAGE BLANK NOT FILMED

COPLANAR SATELLITE AND CONSTRUCTION OPTIONS

This chart shows the 3-trough coplanar satellite with center mounted antenna and with an end mounted antenna together with their applicable optional construction techniques. (The effect of increasing the satellite width to four troughs, with attendant reduction in lengths, is shown on the next two charts.) The serpentine construction technique offers the potential of a small SCB and small crew size but offers little flexibility for reducing construction time since each trough is constructed serially; also it is less appropriate for the center mounted antenna configuration. The single pass construction technique has somewhat the opposite characteristics.

SATELLITE AND CONSTRUCTION OPTIONS

BASIC SATELLITE CONFIGURATIONS

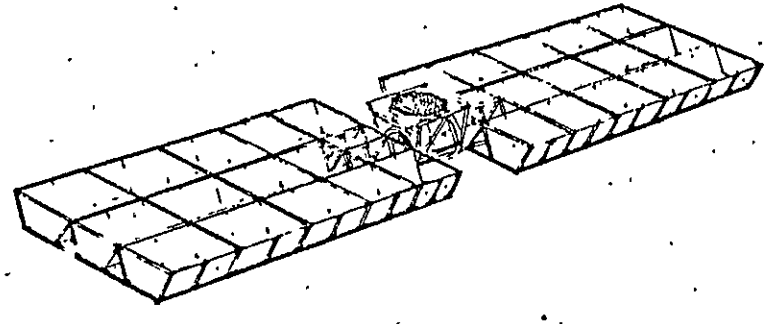

CENTER MOUNTED ANTENNA

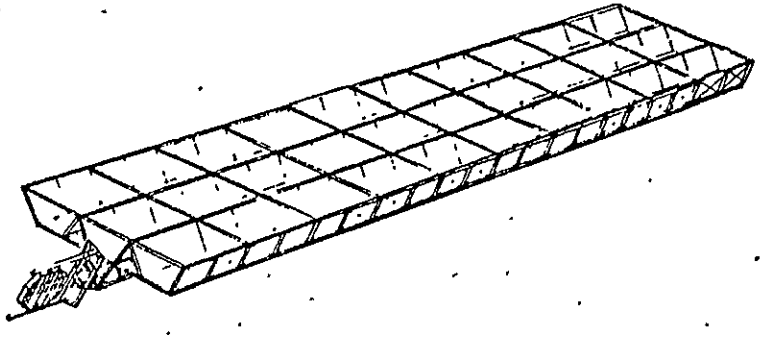

END MOUNTED ANTENNA

CONSTRUCTION CONCEPTS

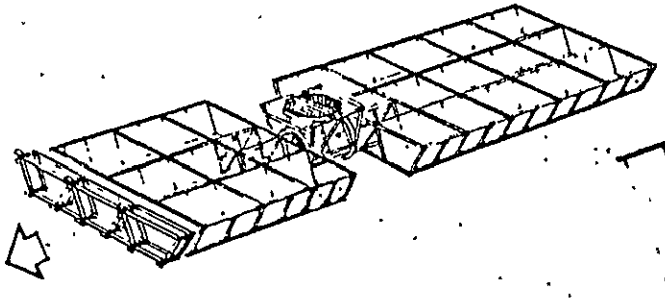

SINGLE PASS

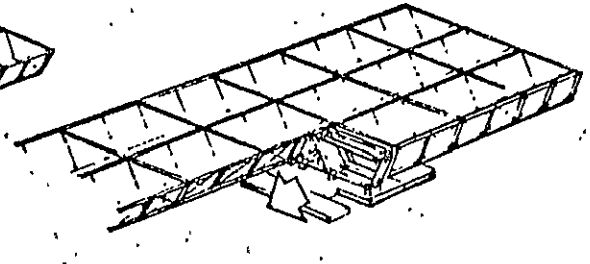

MULTI-PASS SERPENTINE

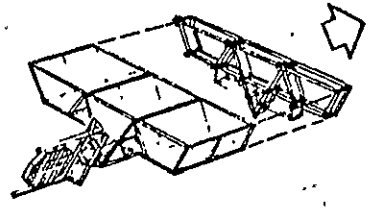

SINGLE PASS

3- AND 4- THROUGH SATELLITES WITH CENTER MOUNTED ANTENNA

The center mounted antenna is shown for the same trough configurations displayed on the previous chart. The difference in satellite mass for these configurations as compared to the end-mounted versions is largely attributable to power distribution. (Parallel build, single pass construction was selected for these configurations since the complexity associated with serpentine build of a center-mounted antenna configuration appeared to be excessive.)

From a constructability standpoint the 3-trough satellite is more desirable than the 4-trough configuration because the SCB is narrower, of lower mass, and requires a smaller crew size.

C3

3- AND 4-TROUGH SATELLITES WITH CENTER MOUNTED ANTENNA

SATELLITE CONFIGURATION	SCB CONFIGURATION	CONSTR CONCEPT
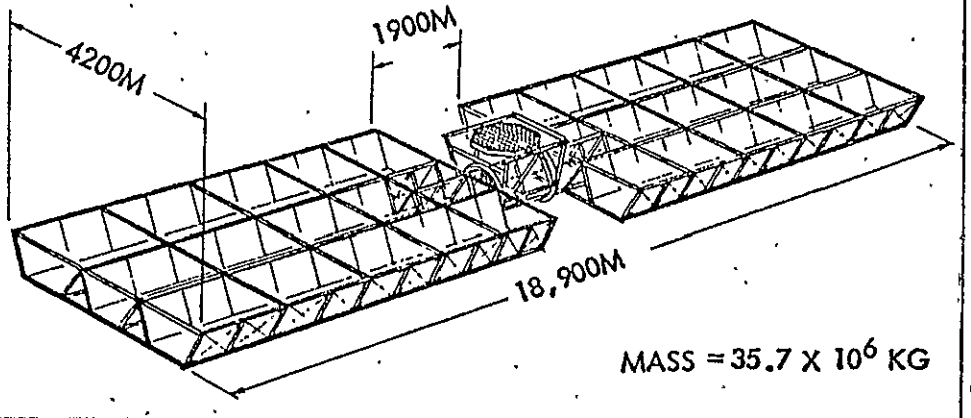 MASS = 35.7 X 10^6 KG	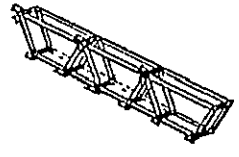 MASS = 5.3 X 10^6 KG	SINGLE PASS
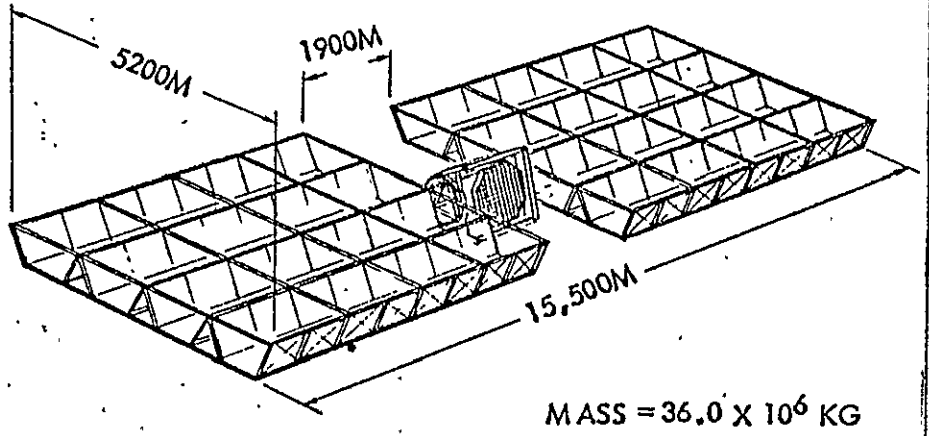 MASS = 36.0 X 10^6 KG	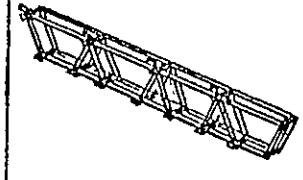 MASS = 6.5 X 10^6 KG	SINGLE PASS

3- AND 4- TROUGH SATELLITES WITH END MOUNTED ANTENNA

Three and four trough versions of the satellite end-mounted antenna configurations are shown. The solar blanket area is the same for each version. Two different construction concepts have been identified; parallel build single pass for the three troughs and serpentine for the four troughs. It can be shown that the single pass concept possess potential for shortening the nominal 180 day construction schedule; the serpentine concept, because of sequential trough construction, requires the entire 180 days. While the mass of the SCB used for serpentine construction is slightly less than for the single pass SCB, the serpentine SCB, featuring a large platform with sliding sections, is more complex.

3- AND 4-TROUGH SATELLITES WITH END MOUNTED ANTENNA

SATELLITE CONFIGURATION	SCB CONFIGURATION	CONSTR CONCEPT
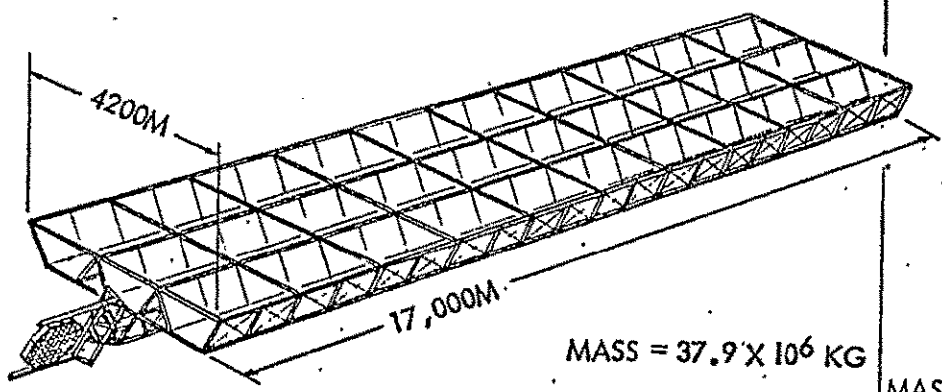 MASS = 37.9 X 10^6 KG	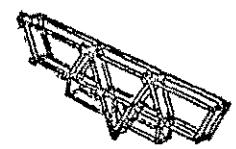 MASS = 5.3 X 10^6 KG	PARALLEL BUILD SINGLE PASS
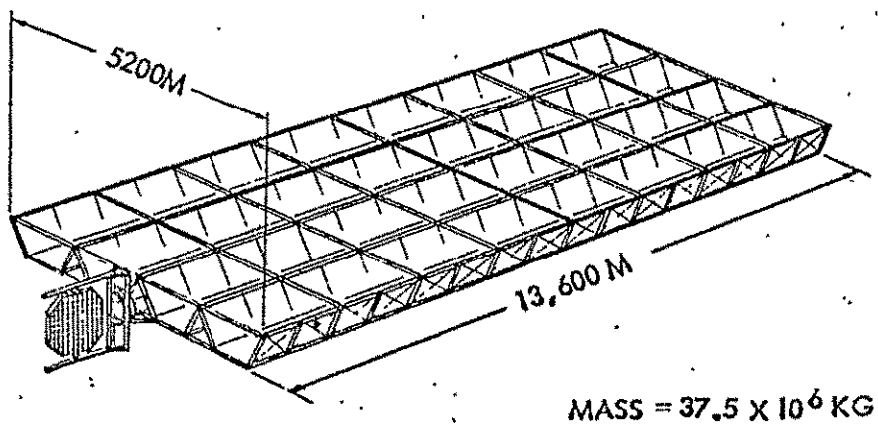 MASS = 37.5 X 10^6 KG	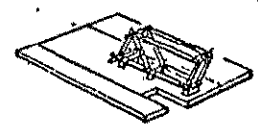 MASS = 5.2 X 10^6 KG	SERPENTINE 4 PASSES

ORIGINAL PAGE IS OF POOR QUALITY

CONSTRUCTION COMPARISON

The differences in facility mass, crew sizes, construction equipment, and construction complexity for the serpentine and single pass construction concepts are shown. The satellites evaluated consist of the three and four trough configurations with either end-mounted or center-mounted antenna. (The effect of this variation on the construction time, crew size and supporting equipment is negligible.) The serpentine concept requires a pass for each trough as opposed to the single pass concept wherein all troughs are constructed simultaneously. The relative complexity (or program risk) considers the operations attendant to fixture and platform translation required for serpentine construction, as opposed to the single pass concept.

The crew sizes reflect average manloading, since the sequence of construction operations, particularly with the single pass concept, permits returning of some personnel to earth prior to satellite completion.

The support equipment requirements (e.g., tribeam fabricators) vary with the construction concept in that for a single pass construction, all troughs and solar converter equipment are completed simultaneously instead of in series. However, the serpentine fixture is required to operate from both sides, which requires two sets of dispensing equipment.

It is noted that the serpentine method results in a smaller crew sizes, and in general, less supporting equipment. The SCB mass for the two concepts is essentially the same, with the platform accounting for a large percentage of the serpentine SCB mass. However, the precursor operations attendant to constructing a platform almost 3 km long in three sections which translate relative to one another are formidable. Moreover, the sequence of translating these sections and the construction fixture many times during the construction of one satellite involves considerable operational complexity and risk. In addition, the concept involves several sequences of securing and releasing the platform to and from the partially completed satellite structure (2 meter tribeam sections) by means of elevating attach mechanisms. Detailed study will be required to evaluate the feasibility of this operation relative to the stress concentrations involved. For these reasons, the single pass concept is preferred.

CONSTRUCTABILITY COMPARISON
(180 DAY CONSTRUCTION SCHEDULE)

CONSTRUCTION CONCEPT	SATELLITE CONFIGURATION	PASSES	CONST. COMPLEX	CREW SIZE (AVG)	SCB MASS KG x 10^-6 *	BEAM FABRICATORS		FREE-FLYERS		MANNED MANIP. MODULES	CREW/CARGO LV'S
						SOLAR CONV.	ANTENNA	SOLAR CONV.	ANTENNA		
MULTI-PASS SERPENTINE	FOUR TROUGHS	4	6	266	5.2	22	4	4	6	16	5
	THREE TROUGHS	3	4.5	266	5.2	22	4	4	6	16	5
SINGLE PASS	FOUR TROUGHS	1	1.33	392	6.5	32	4	8	6	64	20
	THREE TROUGHS	1	1	332	5.3	24	4	6	6	48	15

*INCLUDES 25% GROWTH

ORIGINAL PAGE IS OF POOR QUALITY

SCENARIO FOR SERPENTINE CONSTRUCTION OF A COPLANAR SATELLITE

PRECEDING PAGE BLANK NOT FILMED

INTEGRATED FABRICATION FIXTURE

The fixture shown is for the serpentine construction concept. This entails beam fabrication from each side of the fixture as shown, for example by the duplicate sets of longeron beam fabricators, denoted by (8A) and (8B). In addition to fabricators for the basic satellite structure, fabricators for the antenna frame are shown (8E). The concept for building the antenna frame a half at a time will be sequently covered. Antenna RF elements are installed from the two assembly and installation stations, (15). Crew, power, warehousing and receiving facilities are grouped on the central portion of the fixture, indicated by (2) through (5). The rotating joint assembly fixture, (10), is located in the triangle formed by the two left diagonals.

The fixture is mounted on a platform in tracks which provide for transverse and longitudinal movement. The movement is effected by means of 3 translation carriages, (12), which are attached to tracks in the platform, shown in the last chart.

INTEGRATED FABRICATION FACILITY

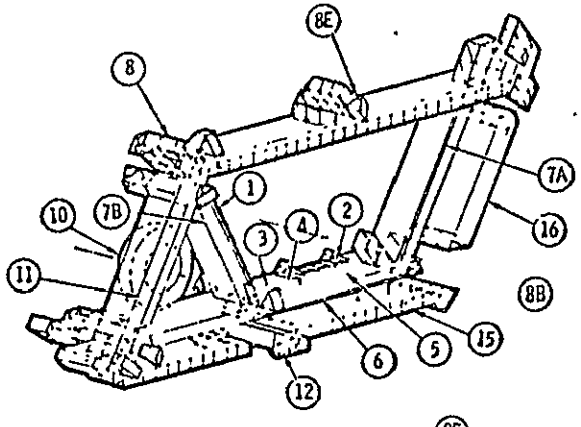

INTEGRATED FABRICATION FIXTURE

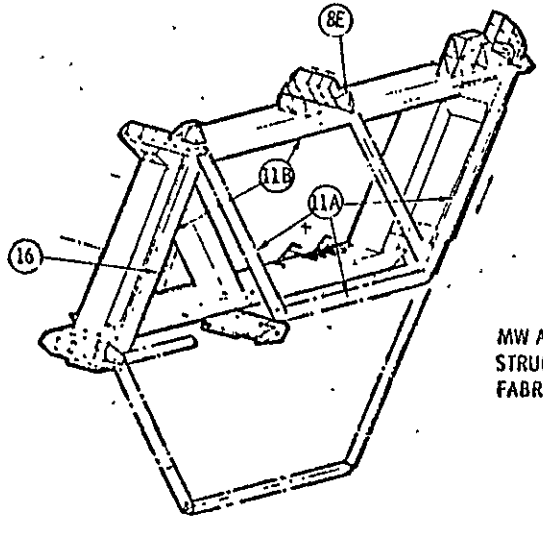

MW ANTENNA STRUCTURE FABRICATION

1. CONSTRUCTION FIXTURE
2. MAIN SUPPORT FACILITIES & EQUIPMENT
3. WAREHOUSE
4. CARGO RECEIVING
5. POTV DOCKING
6. SOLAR BLANKET & PDS INST STATION
7A. 2 REFLECTOR INSTALLATION STATIONS ON UNDERSIDE (+X) OF DIAGONAL
7B. 2 REFLECTOR INSTALLATION STATIONS, ONE EACH ON +Y & -Y SIDE OF DIAGONAL BRACE
8. BEAM FAB/INST WORK STATIONS
8A. LONGERON TRIBEAM FABRICATORS, +Y (3 PLACES (5 PLACES FOR TROUGH 1))
8B. LONGERON TRIBEAM FABRICATORS, -Y (3 PLACES (5 PLACES FOR TROUGH 1))
8C. DIAGONAL TRIBEAM FABRICATORS, (2 PLACES (3 PLACES FOR TROUGH 1))
8D. TRANSVERSE BEAM FABRICATORS (3 PLACES)
8E. ANTENNA FRAME TRIBEAM FABRICATORS (6 PLACES)
9. INTRABASE LOGISTICS VEHICLES
10. ROTATING JOINT ASSEMBLY FIXTURE
11. ANTENNA FRAME FAB FIXTURE
11A. LOWER HALF
11B. UPPER HALF
12. CONSTRUCTION FIXTURE TRANSLATION CARRIAGE (3 PLACES)

SATELLITE CONSTRUCTION BASE (SCB)
(SERPENTINE CONSTRUCTION)

The translation platform is shown here with the construction facility attached to the tracks, (18) by the three translating carriages. The platform consists of three sections attached to one another by means of sliding guideways, (17) which permit lateral relative movement during the repositioning operations as shown on the bottom figure and as described in other charts. The elevating frame attach fittings, (14), are used to secure the platform to the partially completed satellite and to thus permit movement of the construction facility relative to the satellite.

(The callouts indicated by the circled numbers are identified on the following chart).

SATELLITE CONSTRUCTION BASE (SCB)
(SERPENTINE CONSTRUCTION)

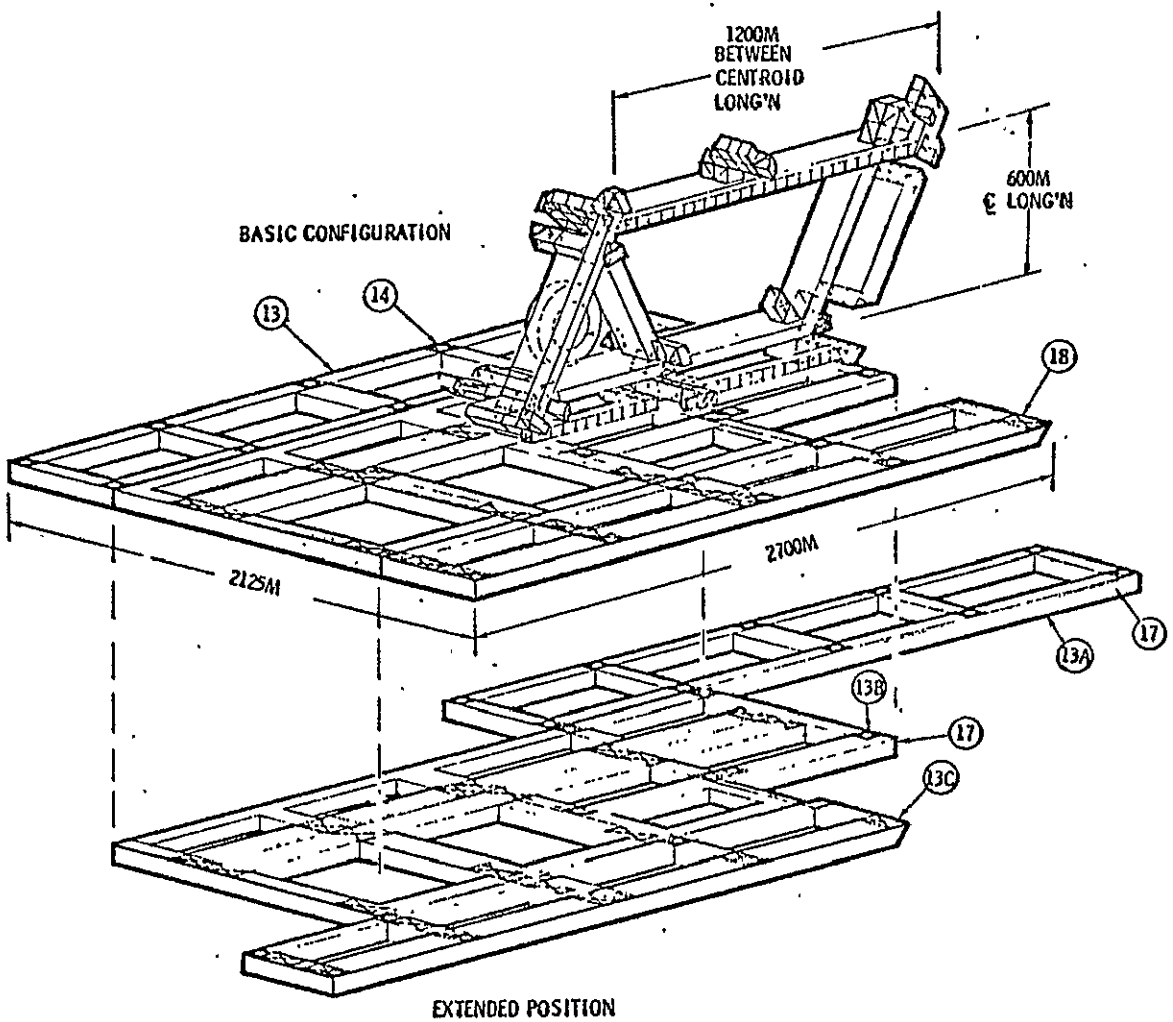

ORIGINAL PAGE IS
OF POOR QUALITY

(1) CONSTRUCTION FIXTURE
(2) MAIN SUPPORT FACILITIES & EQUIPMENT
(3) WAREHOUSE
(4) CARGO RECEIVING
(5) POTV DOCKING
(6) SOLAR BLANKET & PDS INST STATION
(7A) 2 REFLECTOR INSTALLATION STATIONS ON UNDERSIDE (+X) OF DIAGONAL
(7B) 2 REFLECTOR INSTALLATION STATIONS, ONE EACH ON +Y & -Y SIDE OF DIAGONAL BRACE
(8) BEAM FAB/INST WORK STATIONS
(8A) LONGERON TRIBEAM FABRICATORS, +Y (3 PLACES (5 PLACES FOR TROUGH 1))
(8B) LONGERON TRIBEAM FABRICATORS, -Y (3 PLACES (5 PLACES FOR TROUGH 1))
(8C) DIAGONAL TRIBEAM FABRICATORS, (2 PLACES (3 PLACES FOR TROUGH 1))
(8D) TRANSVERSE BEAM FABRICATORS (3 PLACES)
(8E) ANTENNA FRAME TRIBEAM FABRICATORS (6 PLACES)
(9) INTRABASE LOGISTICS VEHICLES
(10) ROTATING JOINT ASSEMBLY FIXTURE
(11) ANTENNA FRAME FAB FIXTURE
(11A) LOWER HALF
(11B) UPPER HALF
(12) CONSTRUCTION FIXTURE TRANSLATION CARRIAGE (3 PLACES)
(13) TRANSLATION PLATFORM
(13A) SECTION A
(13B) SECTION B
(13C) SECTION C
(14) ELEVATING FRAME ATTACH FITTING (18 PLACES)
(15) RF ASSY & INST STATION (2 PLACES)
(16) ANTENNA TRANSLATION GUIDEWAYS (2 PLACES)
(17) PLATFORM SLIDING GUIDEWAYS (2 PLACES)
(18) FACILITY TRAVELWAY
(19) INTEGRATED FABRICATION FACILITY

PRECEDING PAGE BLANK NOT FILMED

TROUGH 1 CONSTRUCTION

Five tribeam fabricators for making longerons are indicated in the upper right hand view on the chart. All five are used in the first pass as trough 1 is built. In constructing the remaining troughs only three fabricators (1, 2, 3) are required. The longerons are continuous members for the entire length of the satellite. Only four tribeam fabricators are required for making the cross beams except for the first pass which requires six. The cross beams are continuous for their respective lengths. In making the solar converter troughs the initial frame is constructed using the fixture as the tooling jig. The longerons are then fabricated away from the face of the SCB moving the frame with them. As they move out, the solar blankets, reflectors, power feeders and other elements of the solar converter are dispensed. At the completion of the length of each bay, fabrication in the longitudinal direction is stopped, the beams for the next frame (which have been fabricated during construction of the longerons) are connected in place to the longerons and the solar blankets and reflectors are tensioned between the frames to complete the bay.

The translating platform supports the fixture assembly and all SCB facilities. It is designed to move with the rest of the SCB in the longitudinal direction but can also be locked to the completed structure to perform its functions at the end of each trough. The fixture assembly is mounted in tracks on the platform which permit movement of the fixture both laterally and longitudinally. The platform extends 775 m wider than the structure of the trough being constructed. After the last frame of trough 1 is completed the translation platform is clamped to the longerons of trough 1. The fixture assembly is first translated in the longitudinal direction to clear the last frame, then translated laterally to be in line for construction of trough 2. It is then translated longitudinally back along the side of trough 1 to be in position for fabrication of the first frame of trough 2. After the first frame of trough 2 is completed and tied into the last frame of trough 1, the translation platform is released from the trough 1 longerons and translated to the left to again be in the position with respect to the fixture assembly shown on the right hand side of the chart.

TROUGH 1 CONSTRUCTION

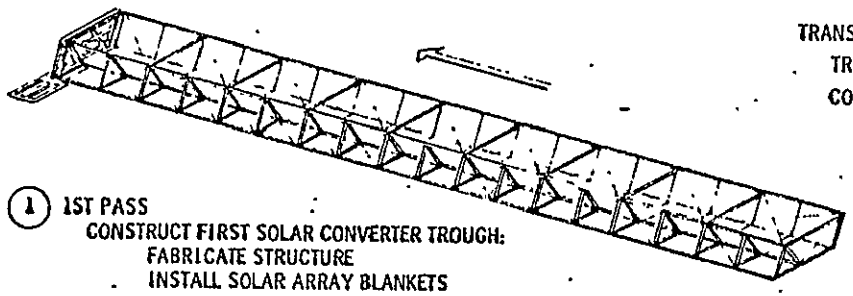

(1) 1ST PASS
CONSTRUCT FIRST SOLAR CONVERTER TROUGH:
- FABRICATE STRUCTURE
- INSTALL SOLAR ARRAY BLANKETS
- INSTALL POWER DISTRIBUTION SYSTEM AND CONTROL EQUIPMENT
- INSTALL REFLECTORS

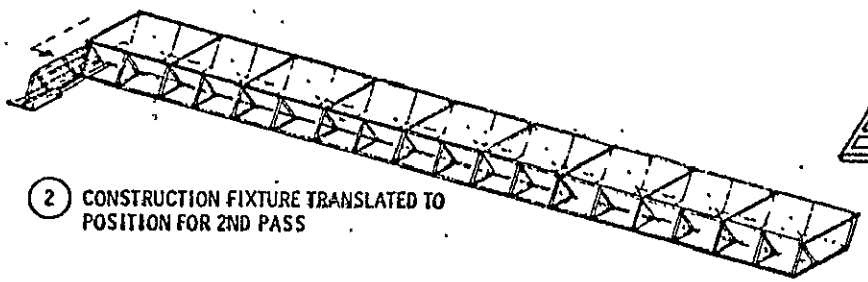

(2) CONSTRUCTION FIXTURE TRANSLATED TO POSITION FOR 2ND PASS

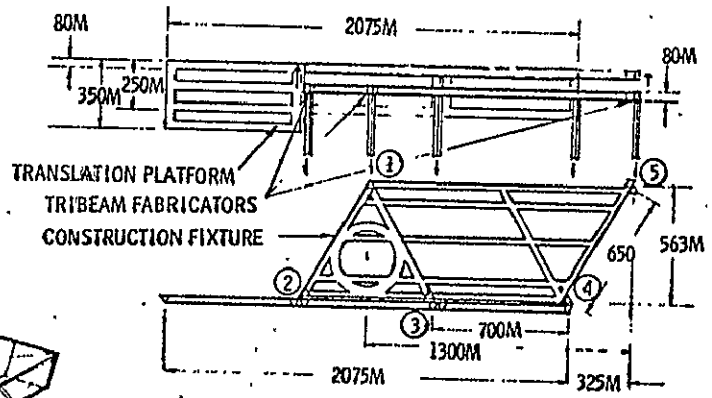

SATELLITE CONSTRUCTION BASE (SCB)

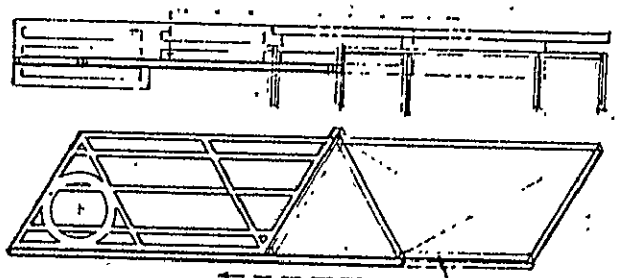

COMPLETED SOLAR CONVERTER TROUGH

TROUGH 2 AND MW ANTENNA FRAME CONSTRUCTION

This series of charts illustrate the serpentine coplanar satellite configuration and construction concept. The constructure fixture is designed for simultaneous fabrication of the antenna on the -Y face while the second trough is being fabricated from the +Y face. The SCB geometry and the sequence of construction of the solar converter portion of the satellite make it necessary that the antenna and rotary joint installations be completed prior to starting construction of the third trough. The rotary joint can be assembled and checked out independently on the special circular jig any time during construcation of the first two troughs. Antenna frame fabrication is initiated simultaneously with start of construction of trough No. 2. Installation of the RF elements is started as soon as the tension web installation is completed. Fabrication of the antenna yoke and rotary joint standoff support structure occurs after completion of trough No. 2 since those operations take place on the +Y side of the construction fixture.

The 50-m tribeam fabricators produce the structure for the antenna frame. Referring to the middle view on the chart, the lower one-half portion of the frame is fabricated first using the part of the fixture indicated by the heavy dashed lines. This half-frame is closed out across the top with the temporary 50-m tribeam tie bar indicated for stabilization during the remainder of the assembly operations. This frame half is then translated to a position below the translation platform (arrows and phantom outline in the middle view) and the upper half is fabricated using the heavy solid line part of the fixture, and the two-halfs are joined to form the hex-shaped frame.

The lower right-hand view shows that the SCB provides for up-down translation of the antenna in the X-Z plane. The position of the tie bar is variable from the X-Y plane of the base of the translating platform to the X-Y plane of the upper cross frame of the construction fixture. This permits installation of the tension web, installation of the RF mechanical modules (antenna upper-half installed from the upper RF assembly and installation facility, antenna bottom half installed from the lower RF facility), and alignment of the completed antenna with the rotary joint. Assembly and checkout of the subarrays and mechanical modules is also accomplished at the RF facilities.

TROUGH 2 AND MW ANTENNA CONSTRUCTION & RF INSTALLATION

(3) & (4) 2ND PASS

CONSTRUCT SECOND SOLAR CONVERTER TROUGH
CONSTRUCT MW ANTENNA STRUCTURE AND SLIP RING ASSEMBLY
ASSEMBLE AND INSTALL ANTENNA RF ELEMENTS

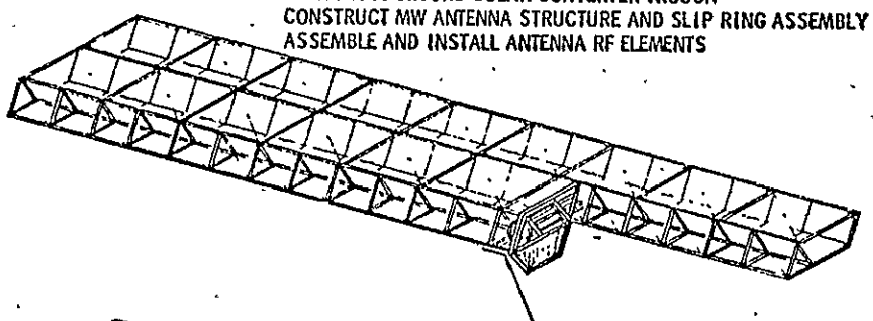

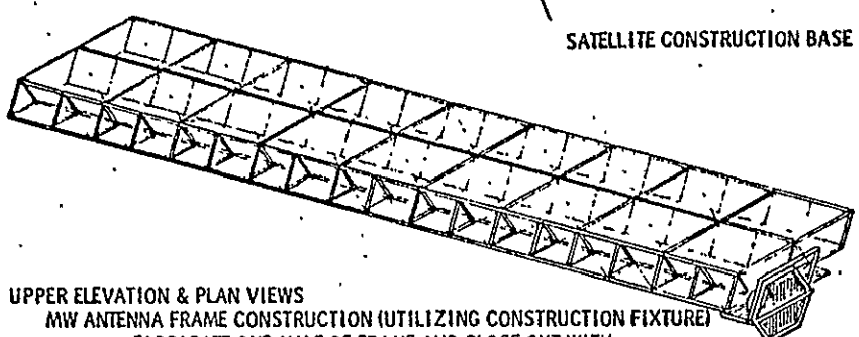

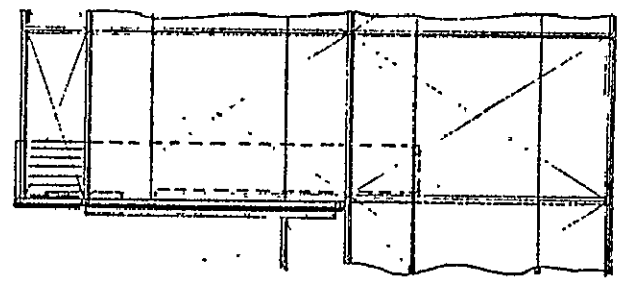

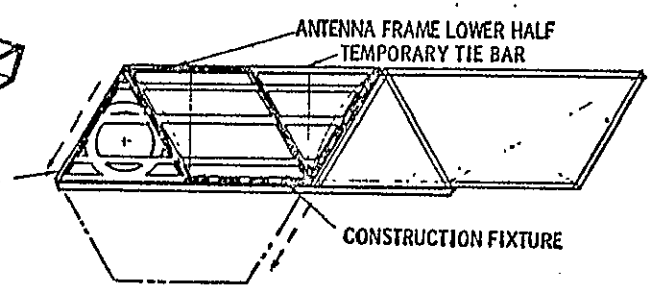

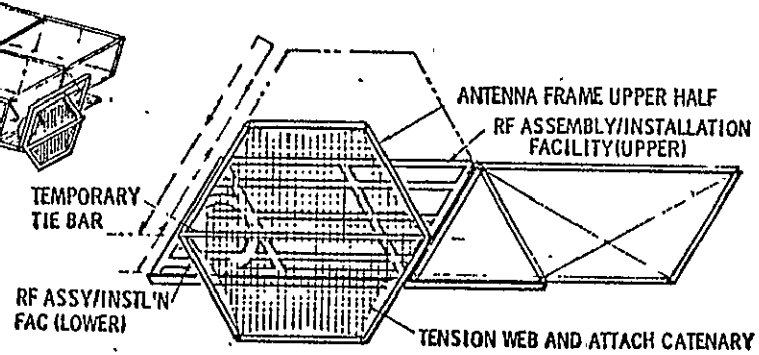

UPPER ELEVATION & PLAN VIEWS
- MW ANTENNA FRAME CONSTRUCTION (UTILIZING CONSTRUCTION FIXTURE)
  - FABRICATE ONE-HALF OF FRAME AND CLOSE OUT WITH TEMPORARY TIEBAR (80M GIRDER)
  - TRANSLATE HALF FRAME TO LOWER POSITION
  - CONSTRUCT UPPER HALF OF FRAME AND JOIN TO LOWER HALF
  - INSTALL TENSION WEB

LOWER ELEVATION VIEW
- ANTENNA RF ELEMENTS ASSEMBLY AND INSTALLATION (RF ASSEMBLY/INSTALLATION FACILITY LOCATED ON SPS CONSTRUCTION BASE)
  - ASSEMBLE AND C/O SUBARRAY
  - ASSEMBLE AND C/O MECHANICAL MODULES AND PWR DISTR ELEMENTS
  - INSTALL MECHANICAL MODULES AND POWER DISTRIBUTION SYSTEM ON ANTENNA TENSION WEB

SHEET 2 OF 6

ANTENNA ROTARY JOINT AND YOKE CONSTRUCTION

Upon completion of trough No. 2 the slip ring supports and antenna yoke shown on the chart are fabricated using one of the available 50-m tribeam fabricators. The slip ring supports are joined to the solar converter structure and the slip-ring is removed from its jig and installed on the supports. The base of the antenna yoke is fabricated parallel to the translating base, the antenna is translated to be centered in the projection of the base, and the trunnion support arms are built out in the -Y direction to pass through extensions of the antenna center line on which the trunnions are located. Guideways are provided along the trunnion support arms which engage the trunnions as the support arms are fabricated outward. The translation platform is used to move the center line of the antenna/yoke coincident with the center line of the rotary joint and the yoke is attached to the rotary joint.

ANTENNA ROTARY JOINT & YOKE CONSTRUCTION

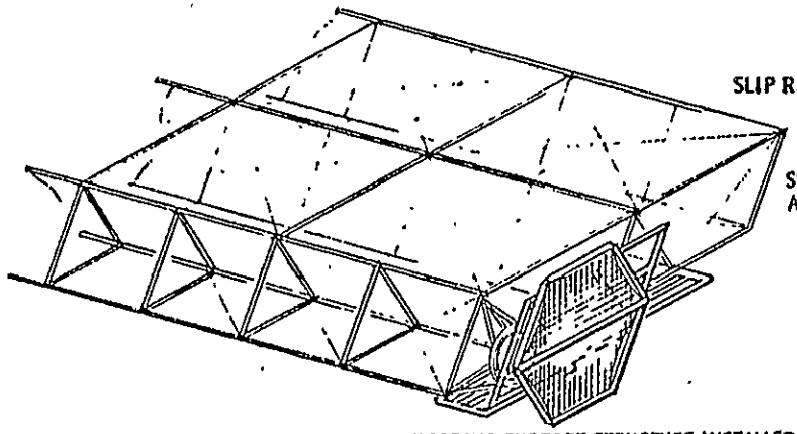

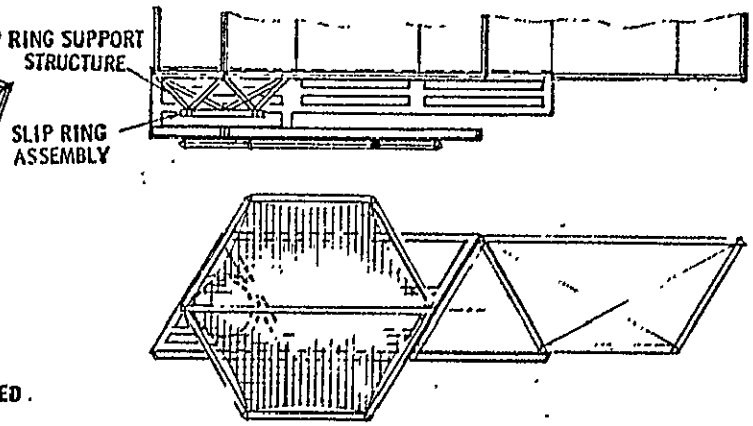

5 SLIPRING SUPPORT STRUCTURE INSTALLED.

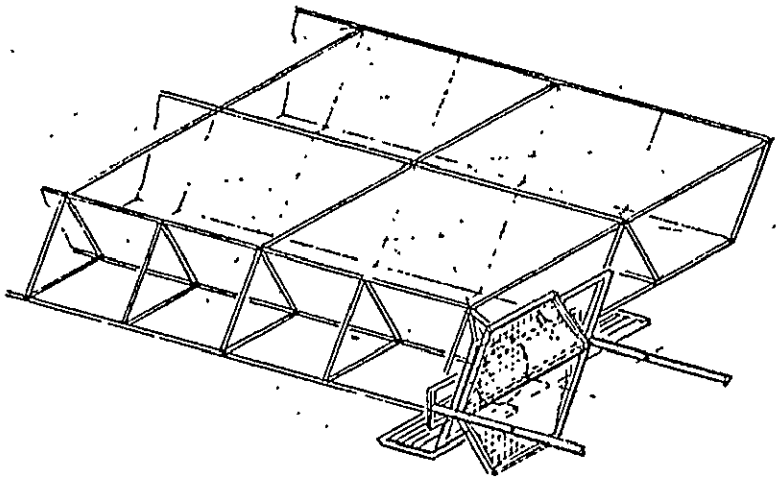

ANTENNA CENTER TRANSLATED TO BE COINCIDENT WITH SLIPRING CENTER VIA TRANSLATION PLATFORM
TRUNNION SUPPORT BASE PLATFORM FABRICATED ONTO OUTER SLIPRING

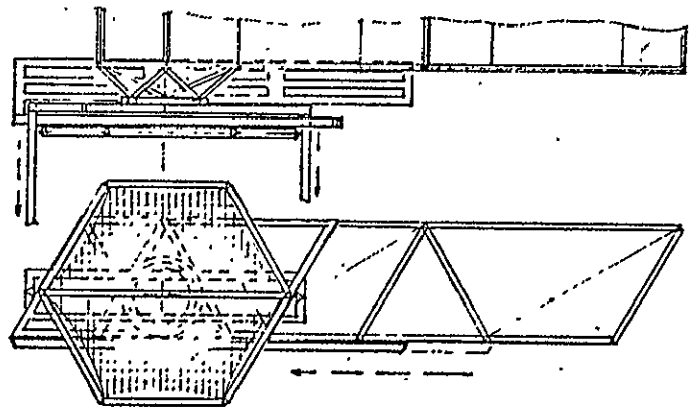

TRUNNION SUPPORT ARMS BUILT OUT FROM BASE PLATFORM
BRACING STRUCT. FOR TSA ADDED
CRAWLER SYSTEM INSTALLED ON TEMPORARY ANTENNA FRAME TIEBAR

ORIGINAL PAGE IS OF POOR QUALITY

ANTENNA MOUNTING AND ROTATION

Referring to the chart a crawler system installed on the temporary tie bar is used to translate the antenna along the trunnion guideways to its gimble plane. The gimbles are secured, azimuth control elements are installed, and electrical power, information management and control system connections are made utilizing the crawler system. Since the slip ring and yoke base are necessarily constructed on opposite sides of the construction fixture it is necessary to rotate the slip ring and antenna assembly 120° as shown to release the construction base. The construction base is then translated into position to start construction of trough No. 3 (see next chart) through a series of operations similar to those described for moving from trough No. 1.

ANTENNA MOUNTING & ROTATION

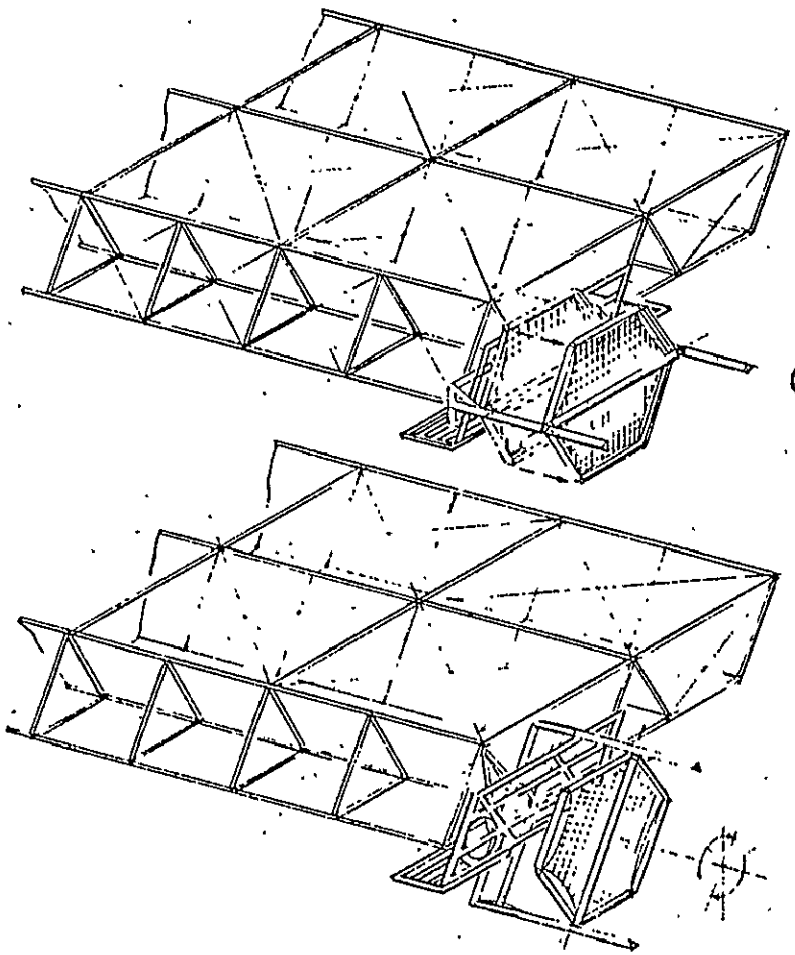

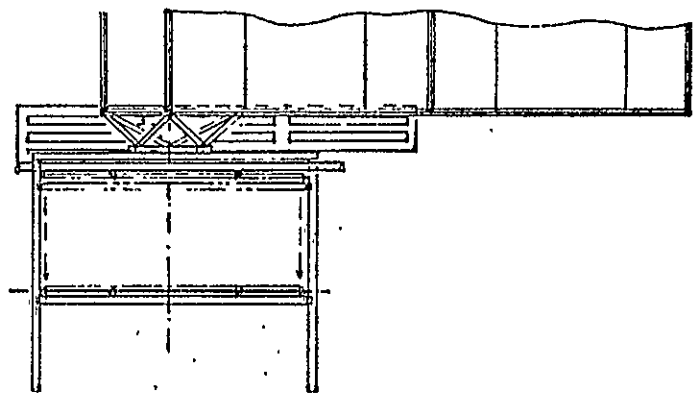

(7) ANTENNA TRANSLATED TO GIMBAL PLANE VIA
CRAWLER SYSTEM ON TIE GIRDER
GIMBAL PICKUP ASSY ADDED
ANTENNA SECURED TO TRUNNION SUPPORT ARMS

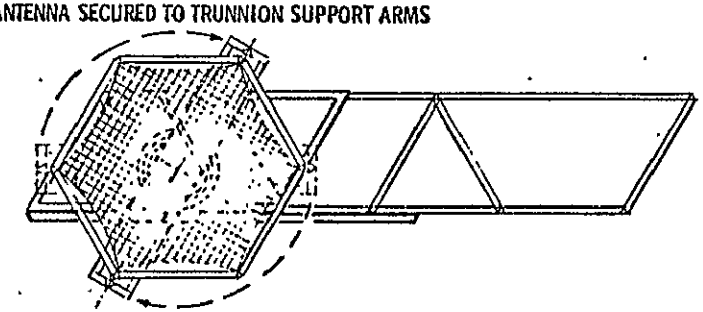

(8) ANTENNA/TRUNNION ARMS ROTATED 120°

SCB TRANSLATION FOR TROUGH 3 CONSTRUCTION

The completed antenna installation is shown. At this time the temporary tie bar is removed from the antenna frame and installed in the guideways of the trunnion support arms to become the permanent antenna maintenance platform. Translation of the platform along the guideways, together with the crawler system which transverses its length, provides access to the entire antenna surface. The platform is stored at the base of the yoke during normal satellite operation.

Construction of troughs No. 3 and No. 4 is identical to construction of No's 1 and 2. The completed satellite has been shown previously. After checking out the satellite the SCB is secured and flown away to the site for construction of the next satellite.

SCB TRANSLATION FOR TROUGH 3 CONSTRUCTION

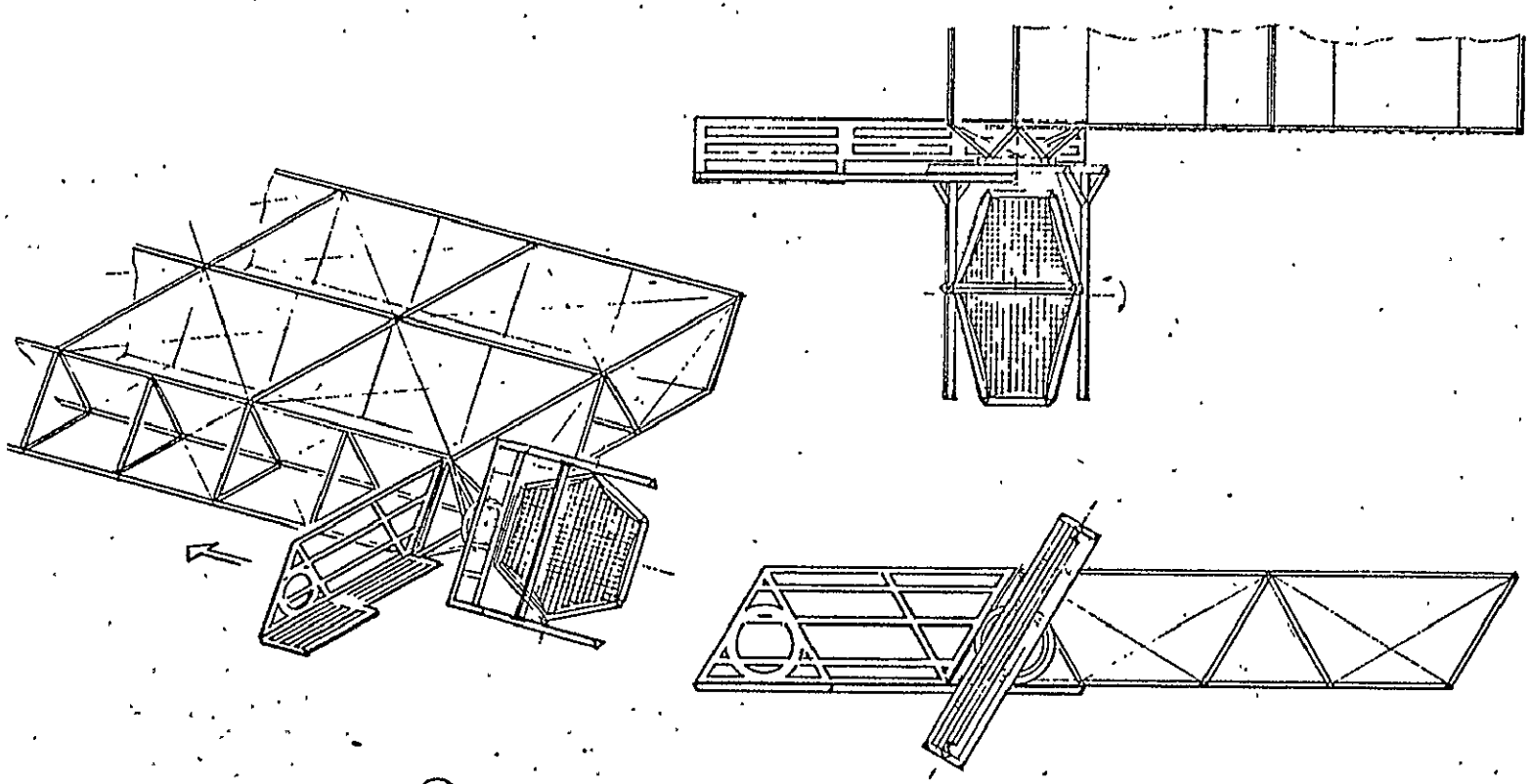

(9) TEMPORARY TIEBAR TRANSFERRED FROM ANTENNA STRUCTURE TO TRUNNION SUPPORT BECOMES PERMANENT MAINTENANCE PLATFORM

- FABRICATION FACILITY TRANSLATES TO NEW POSITION START OF PASS 3.

COMPLETED SATELLITE

This chart shows the completed satellite. The SCB, which has just finished the fourth pass, will now be detached from the satellite and moved to the next operational satellite location for construction of that satellite.

COMPLETED SATELLITE

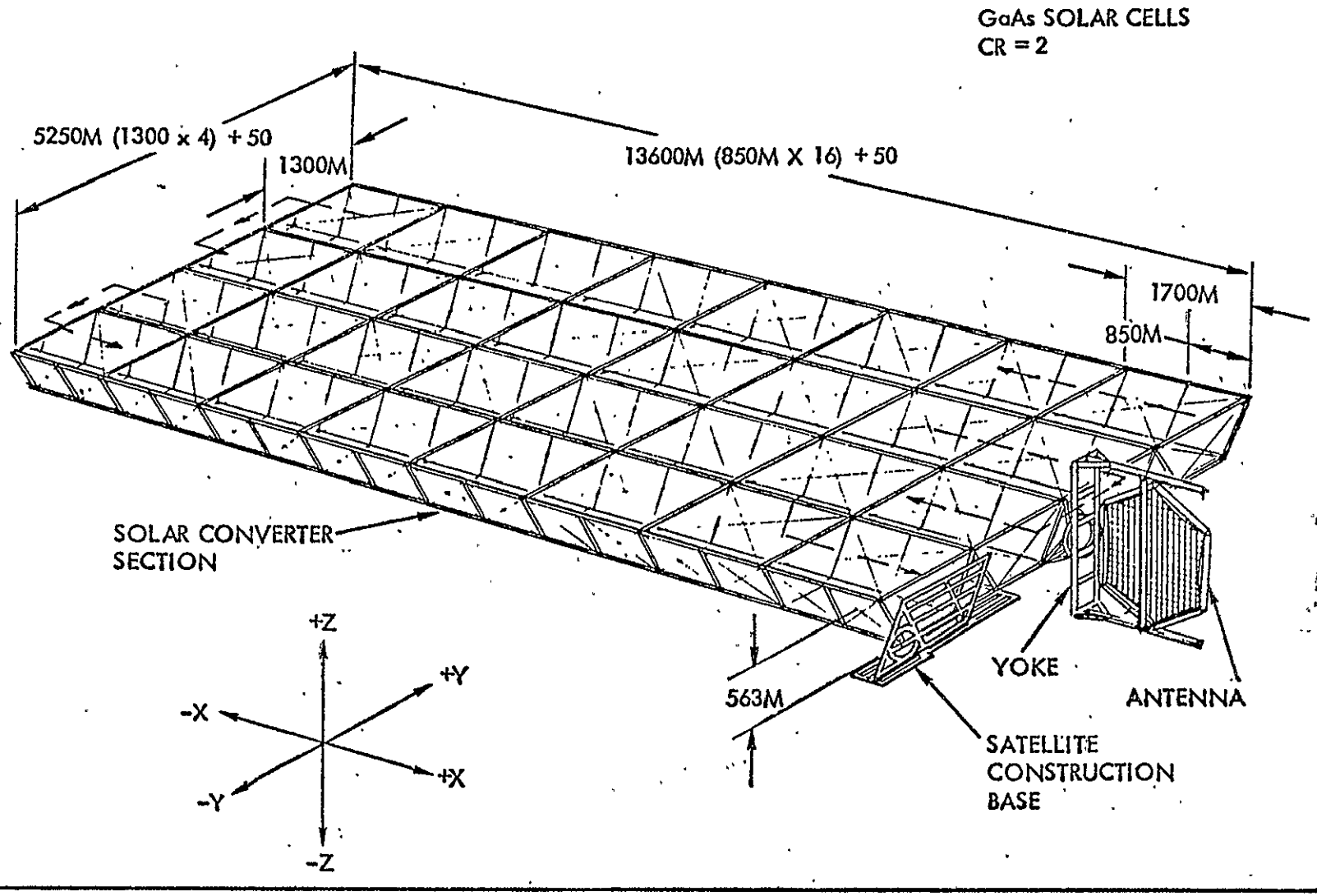

ORIGINAL PAGE IS OF POOR QUALITY

REFERENCE CONFIGURATION

PRECEDING PAGE BLANK NOT FILMED

REFERENCE CONFIGURATION

The Rockwell configuration (Reference concept) for a coplanar satellite with an end-mounted antenna is shown. The satellite has three troughs, each with ten bays, and is 3900 meters wide at the longeron points and 16,000 meters long (less antenna). Twenty-four solar blanket strips, measuring 25 meters by 750 meters, are installed in each bay along the bottom of the trough. The reflectors are attached to the inner diagonal sides of the troughs as indicated. The space frame end-mounted antenna with slip rings, support structure, and trunnion arms extends 1750 meters from the basic satellite.

REFERENCE CONFIGURATION
SPS

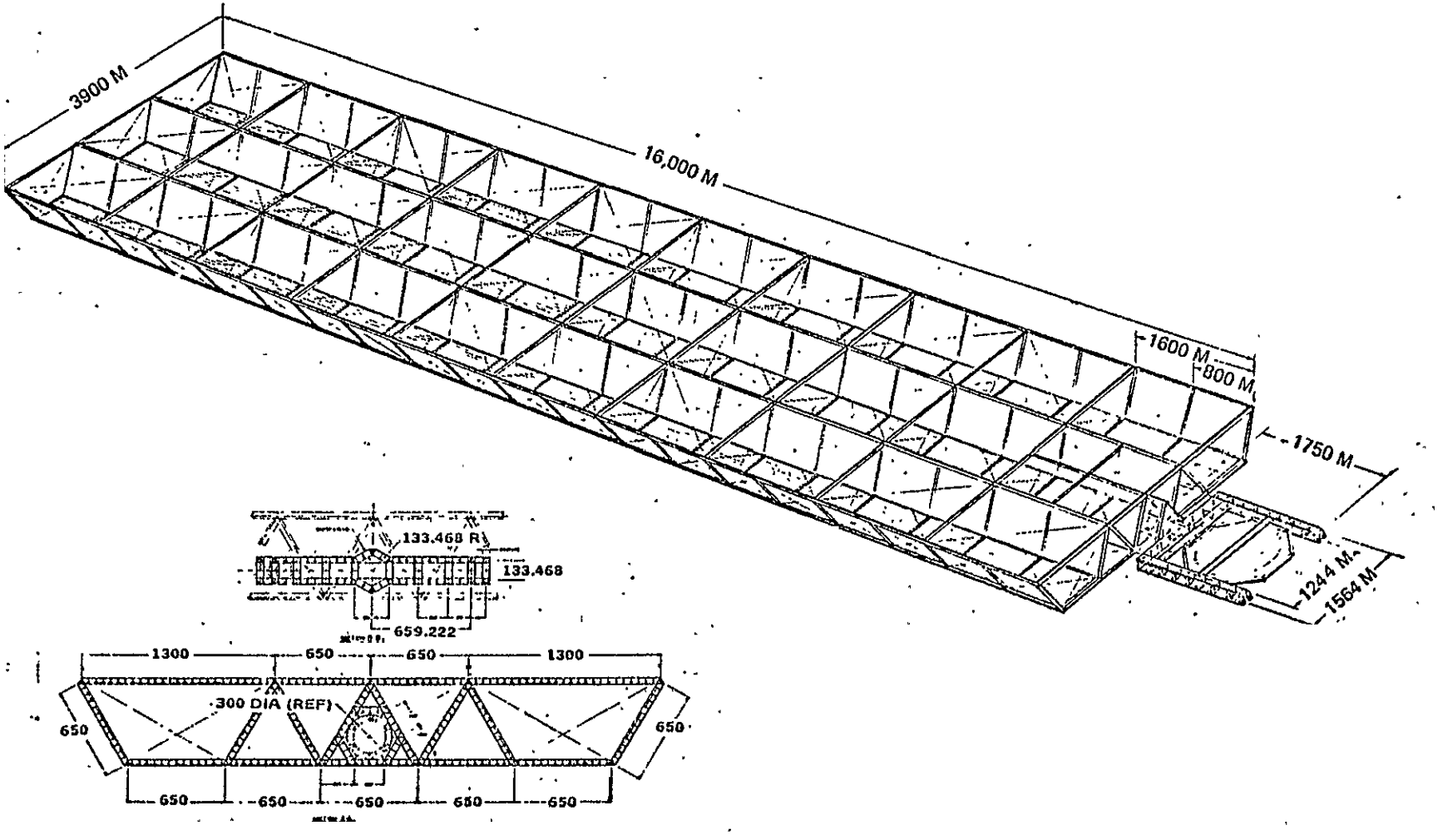

SATELLITE CONSTRUCTION BASE (SCB)

A three view representation of the SCB, including the twenty-seven tribeam fabricators is shown. The three solar blanket dispensing areas are installed along the bottom of each trough. The reflector dispensing areas are located on the inner faces of the six diagonal members forming the sides of the trough. The central habitat, landing area and warehouse is shown at approximately the middle of the top transverse element. Additional auxiliary bases are situated at the bottom of each trough. The additional structure shown in the center trough provides fixtures for constructing the rotary joint and its supporting structure.

SATELLITE CONSTRUCTION BASE (SCB)

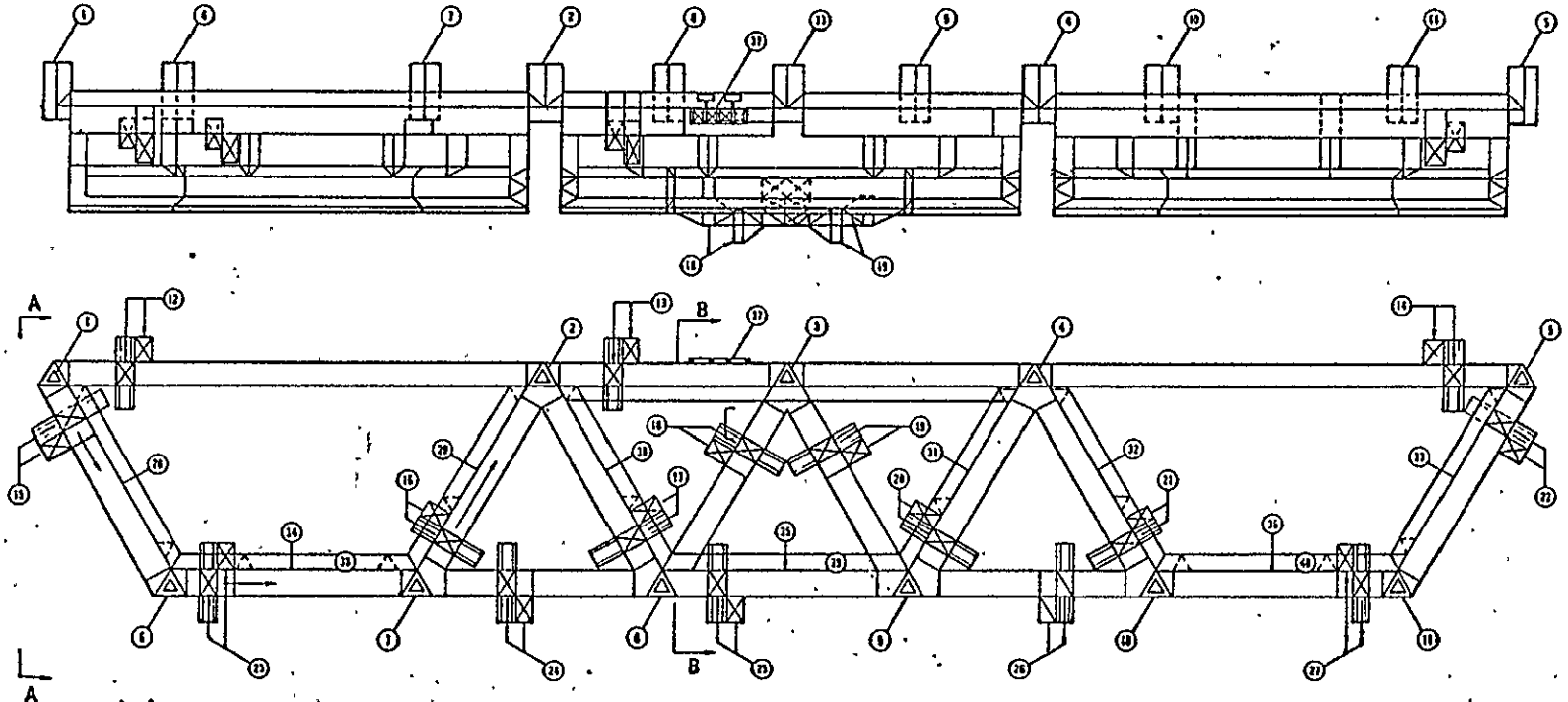

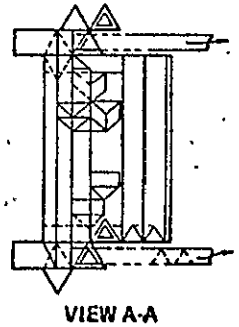

VIEW A-A

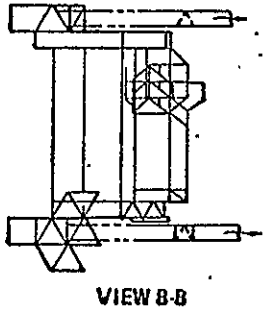

VIEW B-B

EQUIPMENT & LOCATION DESCRIPTIONS

(1) THRU (11) LONGITUDINAL TRIBEAM FABRICATION PODS

(12) THRU (27) CROSSBEAM FABRICATION PODS

(28) THRU (33) REFLECTOR DISPENSING AREAS

(34) THRU (36) SOLAR BLANKET DISPENSING AREAS

(37) CENTRAL HABITAT-LANDING & WAREHOUSING

(38) THRU (39) AUX HAB/COMPLEX BLANKET FACILITIES

ORIGINAL PAGE IS
OF POOR QUALITY

INTEGRATED SATELLITE CONSTRUCTION BASE

This is a perspective of the preceding chart.

INTEGRATED SATELLITE CONSTRUCTION BASE

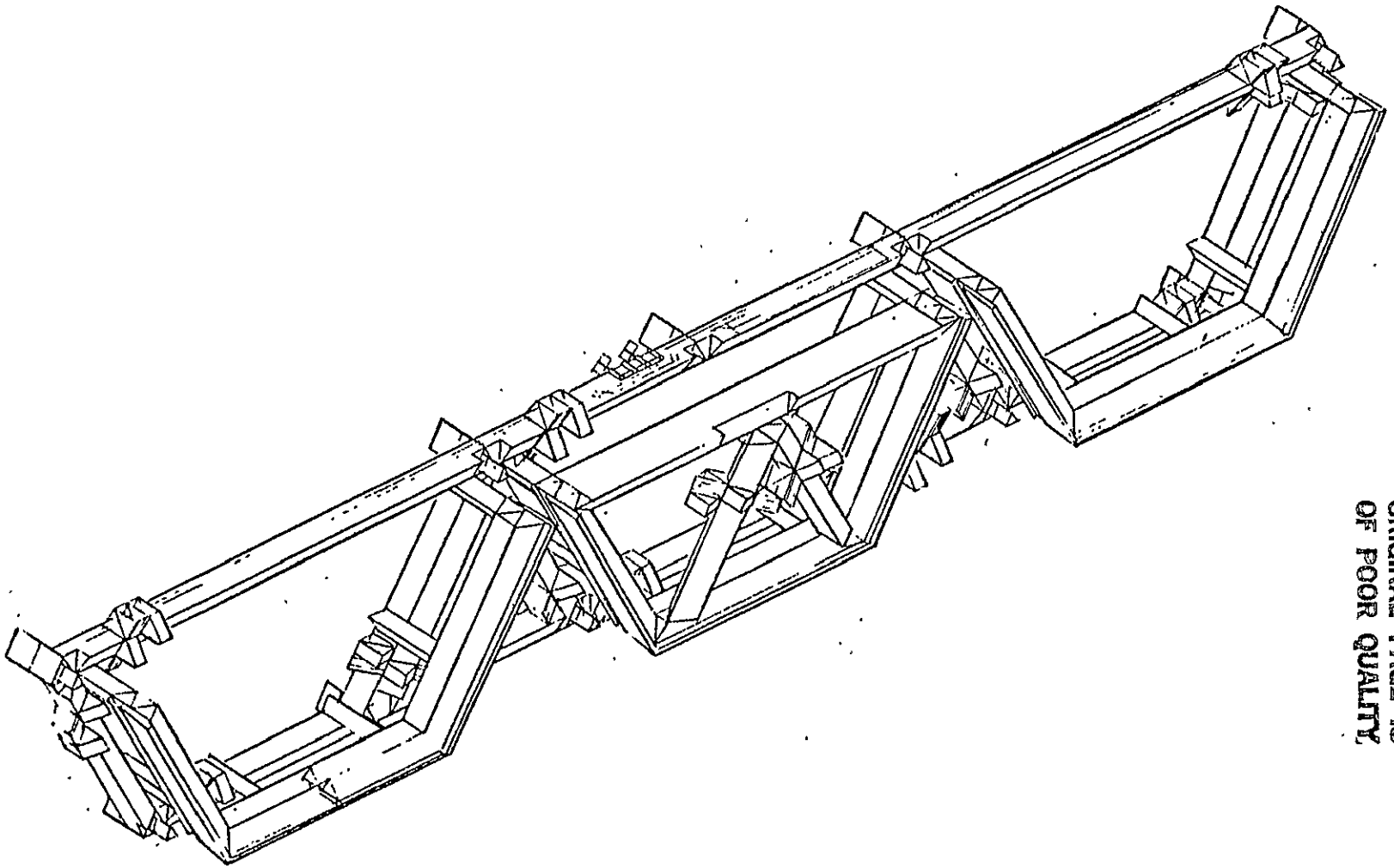

ORIGINAL PAGE IS
OF POOR QUALITY

SLIP RING INTERFACE STRUCTURE

The satellite structure and solar converter is constructed in a single pass, utilizing the integrated SCB. Initially construction of the longitudinal members of the slip ring interface structure is initiated and the members fabricated to a length which will permit attachment to the triangular frame shown in the chart. The frame is then constructed. Following this operation, fabrication of the longitudinal members is resumed until the triangular frame is positioned the proper distance away from the face of the SCB so that the second triangular frame can be completed.

SLIP RING INTERFACE STRUCTURE

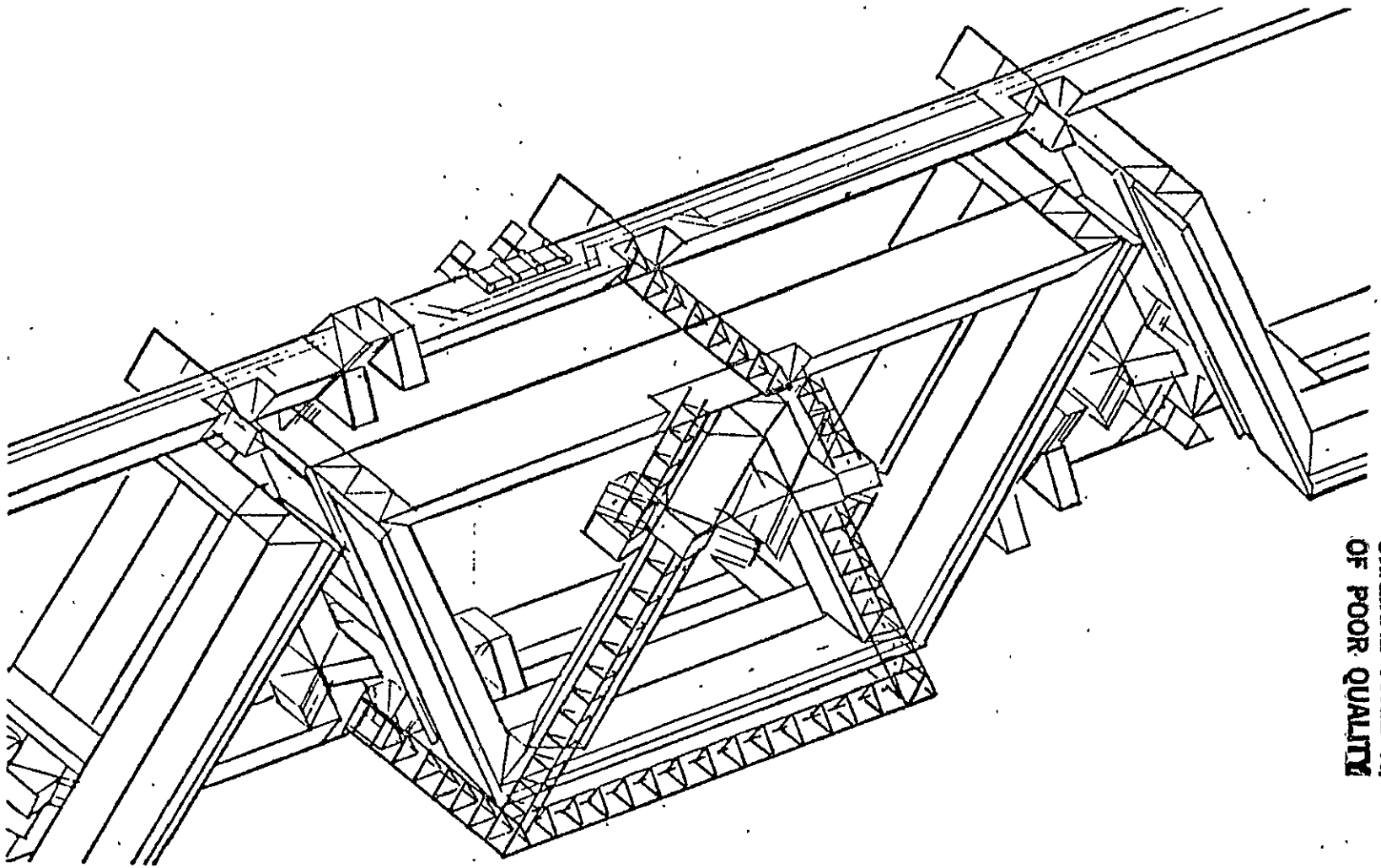

ORIGINAL PAGE IS
OF POOR QUALITY

ANTENNA SUPPORTING STRUCTURE ASSEMBLY SEQUENCE

The sequence of assembling the antenna supporting structure is shown. After completion of the slip ring interface structure and slip ring supporting structure, the slip rings are installed and the antenna yoke base fabricated as shown in the two center illustrations. When the yoke base has been completed, the yoke arms are fabricated as shown in the right hand illustration. Subsequently, the antenna trunnions will be installed and the antenna structure assembled.

ANTENNA SUPPORTING STRUCTURE
ASSEMBLY SEQUENCE

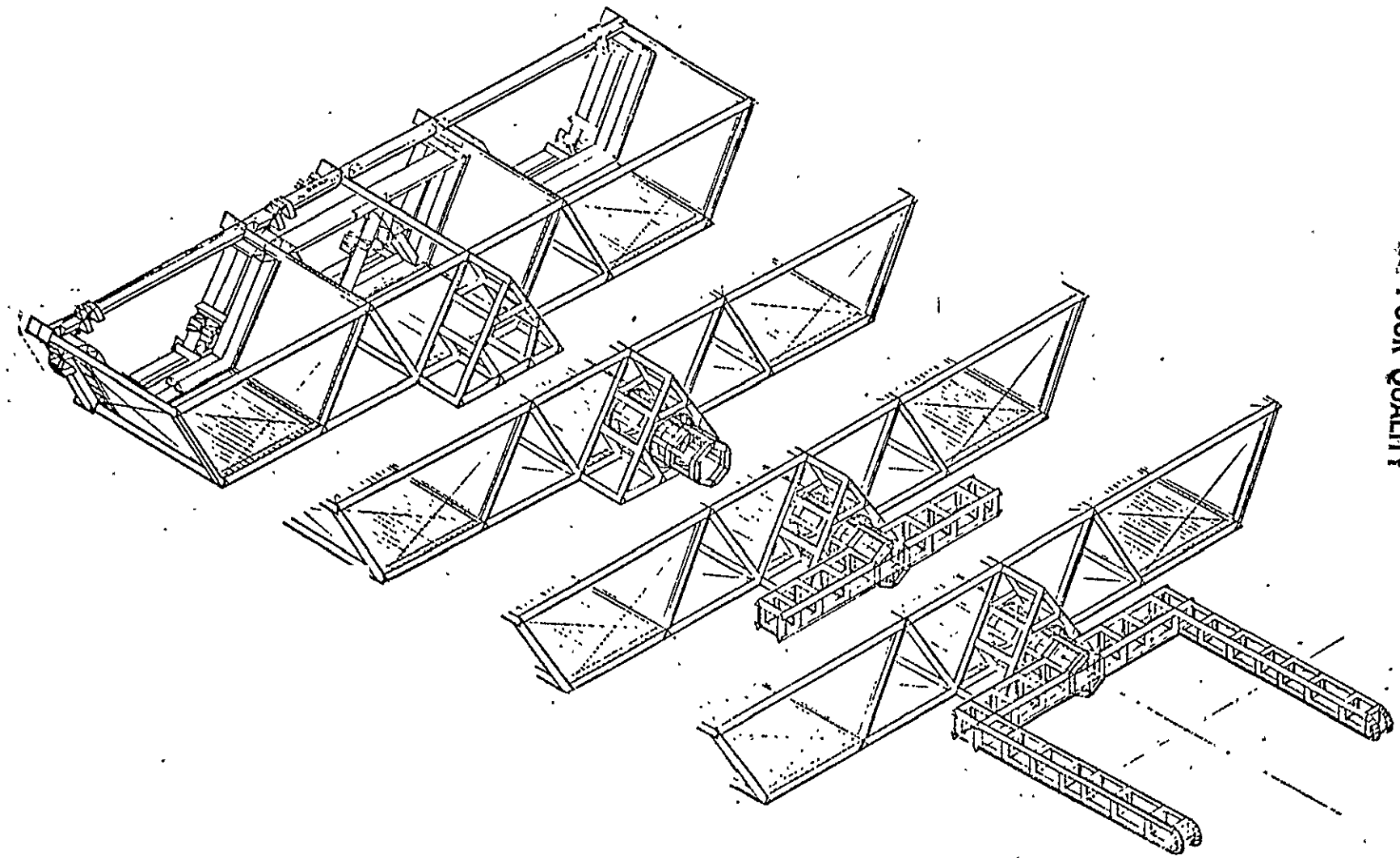

ORIGINAL PAGE IS
OF POOR QUALITY

ANTENNA CONSTRUCTION CONCEPT A

This concept utilizes two sets of travelers which move on tracks installed on the yoke arms. Each set consists of two travelers, one on each yoke arm, connected by cables. One set travels on the upper yoke arm surfaces; the other set travels on the bottom of the arms as shown in the figure. Platforms are attached to the cables and can be positioned on the cables as desired. The mobile RF assembly facility is shown in position in the lower yoke arm of the figure. Mobile beam fabricating facilities are packed on the lower traveler cable/platform system.

Construction of the antenna primary and secondary structure begins at the antenna edge nearest the rotary joint. The lower traveler system fabricates the first structural row (primary and secondary structures) which is secured to the upper traveler system for correct positioning. The second structural row is then fabricated, being connected to the first row during the fabrication process. When the completed structure has progressed to the antenna gimbal plane, the gimbal (or trunnion) interface structure is installed and the partially completed antenna structure connected to the yoke arms by the trunnions joints. At this point, since the structure is attached to the yoke, the upper traveler system can be released from the antenna structure to begin installation of RF elements in that portion of the antenna structure thus far completed. The lower traveler assembly proceeds with the completion of the remainder of the antenna structure.

Upon completion of the antenna, the RF assembly facility is relocated to the SCB where assembly of RF elements for the next satellite is started. The two traveler cable/platform systems remain in their track on the yoke arms to support antenna maintenance activities after the satellite is operational.

ANTENNA CONSTRUCTION CONCEPT "A"

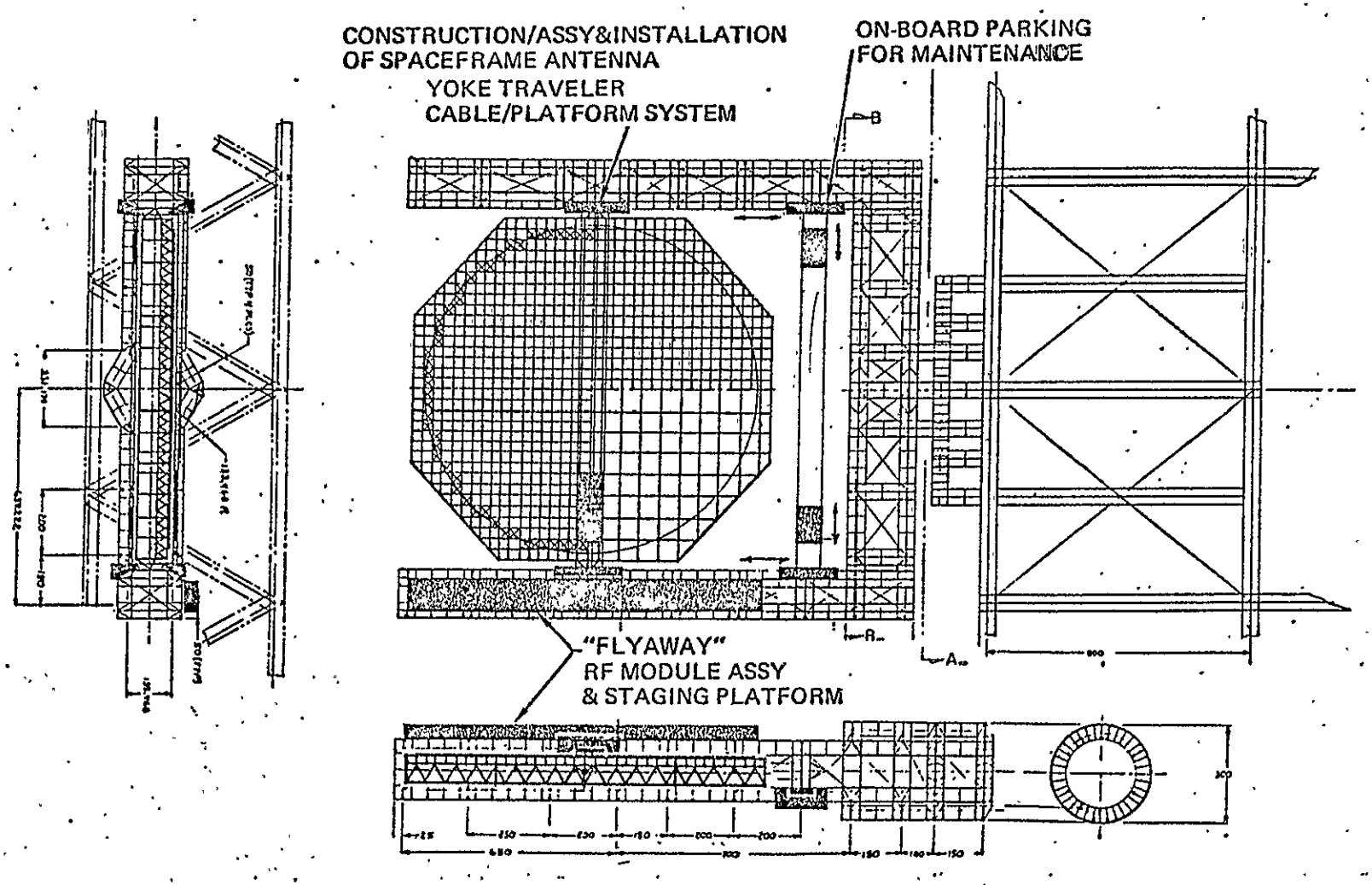

ORIGINAL PAGE IS
OF POOR QUALITY

ANTENNA CONSTRUCTION CONCEPT A (PERSP.)

A perspective of Concept A is depicted in the chart. The traveler set which rides tracks on the upper face of the yoke arms is positioned adjacent to the slip ring, or rotary joint. The platforms which traverse the cables of this set have been positioned and attached to the first structural row of the antenna structure. The other traveler set, which is equipped with cables for securing both primary and secondary structural fabrication equipment, has almost advanced to the gimbal plane of the antenna. The fly away platform used to support assembly and installation of antenna RF elements is shown on the right yoke arm. This facility presently is approximately 1 km in length. It is probable that detailed engineering studies of the equipment and activities required for RF assembly would result in a reduction of facility size.

ANTENNA CONSTRUCTION CONCEPT "A" (PERSP)
TRAVELER/-CABLE/PLATFORM SYSTEM

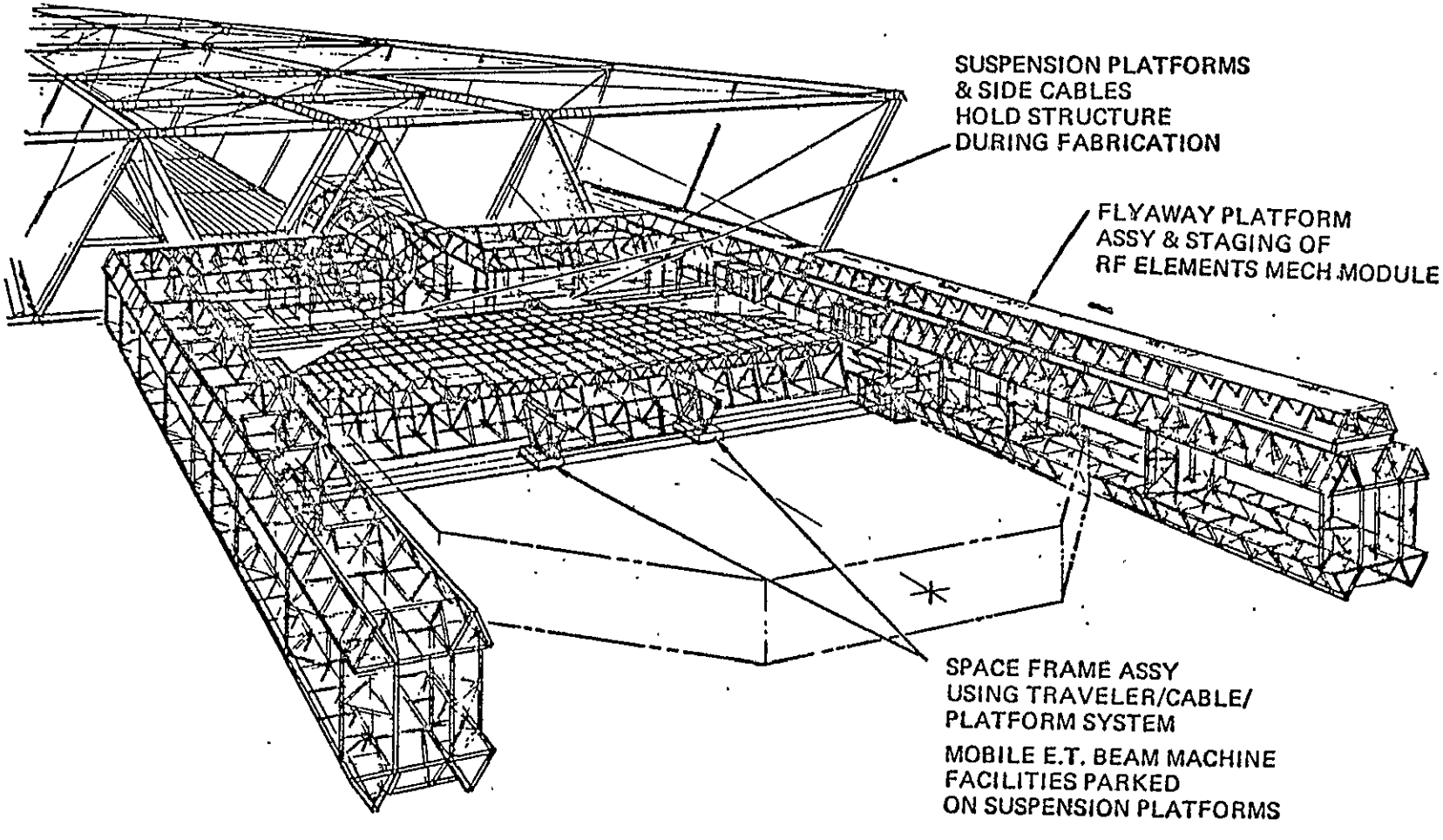

ORIGINAL PAGE IS
OF POOR QUALITY

SOLAR BLANKET DEPLOYMENT FACILITY (ELEVATION)

An elevation of the solar blanket deployment facility is shown. This facility provides for the installation of tension cables, switchgears, distribution feeders, and other equipment associated with the solar blankets. An auxiliary base (15), including crew habitat (17), a docking and service module (16), and a power module (shown to the left of the crew habitat) has been established at each of the three deployment facilities. Capability has been retained, however, for movement of logistics and personnel to and from the central base to the auxiliary base, since more extensive warehousing and servicing facilities exist at the central location, and arriving payloads will be a mix.

The top deck of the facility contains a cargo loading deck which can receive cargo from either the central base or from an EOTV via transfer tugs (IOTV's). A warehousing area is provided on the next lower deck (23). Means of transferring material from this area to the main deck are provided by the inter-deck elevator (24), and the material transit system (22). Supply elevators (3) and (9) are utilized for deliveries of material or manned manipulator modules to the lower deck. POTV's arriving from LEO can dock as indicated at the right of the illustration.

The first step in solar blanket deployment is to load the blanket rolls in the twenty-four dispensers (5) installed in each of the three facilities. This is accomplished by a logistics vehicle (4) which traverses the entire trough width, loading each dispenser as it progresses. It is estimated that the vehicle can load the 24 dispensers in 6 hours (15 minutes per dispenser). The dispensers must be loaded prior to the fabrication of each bay, a six shift operation, so additional time is available if required by contingencies.

The blankets are attached to the tension cables which are strung at either side of the blanket strip by an attach machine (7). Other stations for attaching side and end catenaries and electrical components are also shown as indicated in the number index at the left.

The triangular section at the bottom right of the chart represents the 50 meter crossbeam in the positon for attachment of solar blankets, cables, etc., and installation of switchgears and other electrical components.

SOLAR BLANKET DEPLOYMENT FACILITY (ELEVATION)

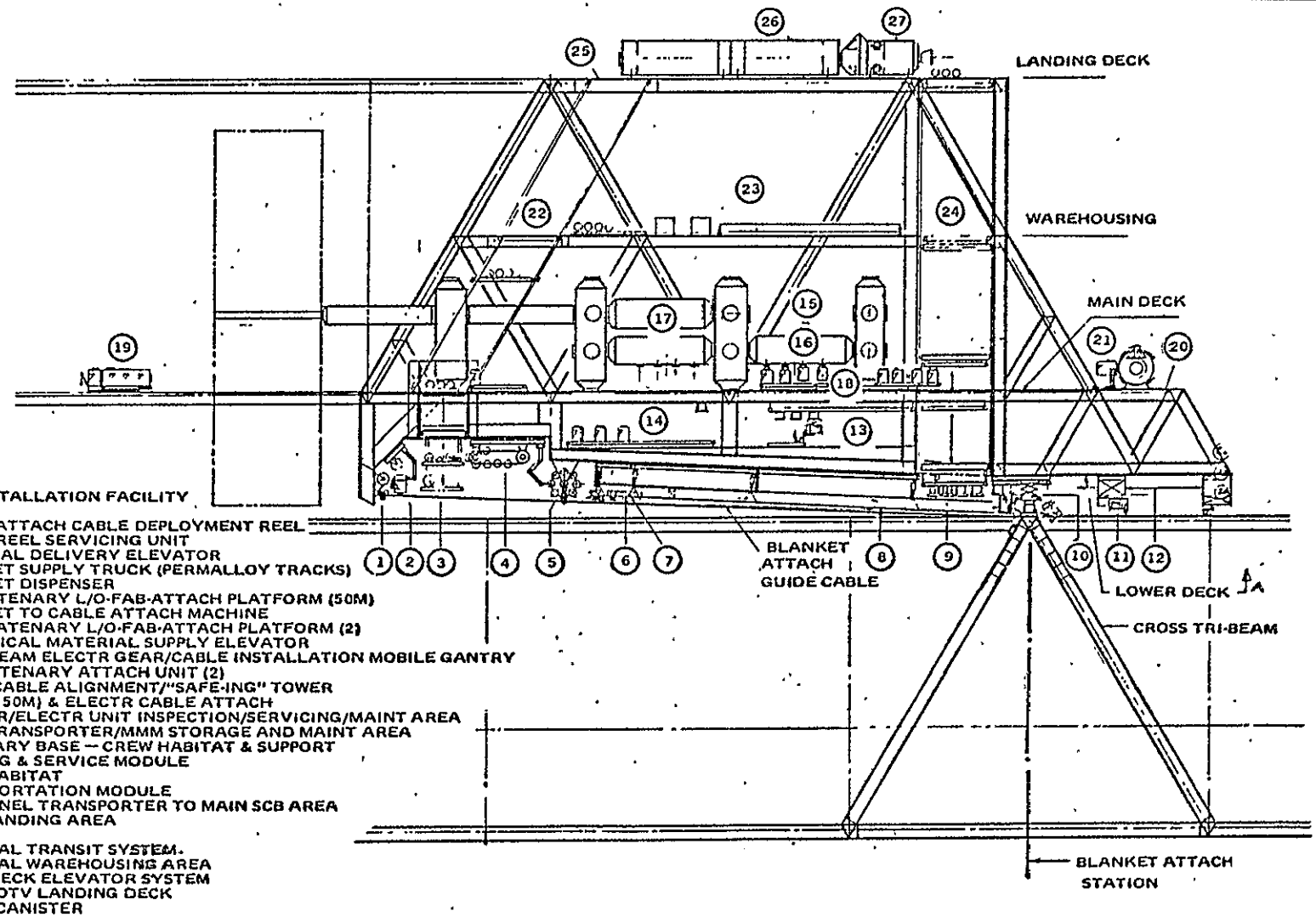

BLANKET INSTALLATION FACILITY

1 GUIDE/ATTACH CABLE DEPLOYMENT REEL
2 CABLE REEL SERVICING UNIT
3 MATERIAL DELIVERY ELEVATOR
4 BLANKET SUPPLY TRUCK (PERMALLOY TRACKS)
5 BLANKET DISPENSER
6 END CATENARY L/O-FAB-ATTACH PLATFORM (50M)
7 BLANKET TO CABLE ATTACH MACHINE
8 EDGE CATENARY L/O-FAB-ATTACH PLATFORM (2)
9 ELECTRICAL MATERIAL SUPPLY ELEVATOR
10 CROSSBEAM ELECTR GEAR/CABLE INSTALLATION MOBILE GANTRY
11 SIDE CATENARY ATTACH UNIT (2)
12 GUIDE CABLE ALIGNMENT/"SAFE-ING" TOWER (EVERY 50M) & ELECTR CABLE ATTACH
13 SW GEAR/ELECTR UNIT INSPECTION/SERVICING/MAINT AREA
14 CREW TRANSPORTER/MMM STORAGE AND MAINT AREA
15 AUXILIARY BASE — CREW HABITAT & SUPPORT
16 DOCKING & SERVICE MODULE
17 CREW HABITAT
18 TRANSPORTATION MODULE
19 PERSONNEL TRANSPORTER TO MAIN SCB AREA
20 POTV LANDING AREA
21 POTV
22 MATERIAL TRANSIT SYSTEM
23 MATERIAL WAREHOUSING AREA
24 INTER-DECK ELEVATOR SYSTEM
25 CARGO-OTV LANDING DECK
26 CARGO CANISTER
27 OTV TO SCB CARGO TRANSFER TUG

ORIGINAL PAGE IS OF POOR QUALITY

INSTALLATION OPERATIONS AT CROSSBEAMS

Switchgear assemblies, secondary power feeders, DM&C elements sub-multiplexers and remote acquisition and control (RAC) units and DM&C buses are located on the crossbeams at the ends of the blanket strips. Alternate crossbeams mount 23 and 12 switch assemblies respectively. Saddle clamps are attached to the crossbeams at 25 m intervals to coincide with the blanket strip edges. The saddle clamp assemblies provide connectors for attachment and tensioning of cables and catenaries, mounting provisions for secondary feeder insulators, and a saddle for support of the switch assemblies.

INSTALLATION OPERATIONS AT CROSSBEAMS

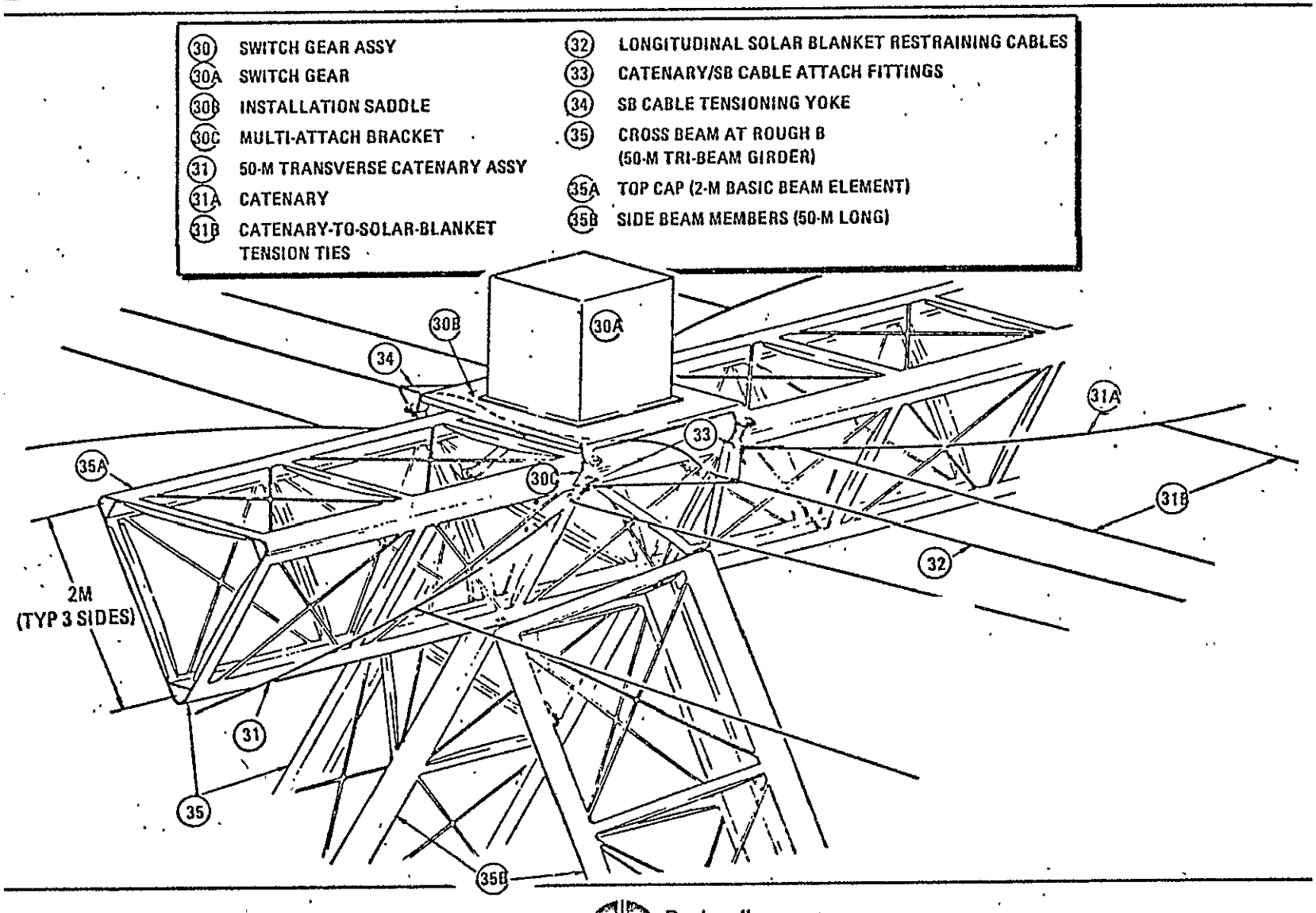

MANNED MANIPULATOR MODULE AND CREW TRANSPORT MODULE

One of the satellite construction guidelines entailed no planned EVA. Accordingly, construction and installation operations concepts have leaned heavily on automated activities, assisted by manned manipulator modules. A typical manipulator module is shown. It's primary elements are the control cab, the support base, and the bilateral manipulator. The base rotates around the center line of the boom attach wrist and the control cab rotates 360° around the vertical axis of its base. The cab provides a shirt-sleeve environment, and can be operated by one man, but has sufficient space to accommodate two suited astronauts. The life support system is sized to support three persons for short periods of time (e.g., a rescue operation). One docking port is located at the top of the cab and one at the bottom of the base, providing dual exits. Facility power is provided through the boom. The boom operation is controlled from the cab with secondary control capability at the platform. The MMM contains provisions for lights and TV cameras.

A crew transport module is depicted to the right of the MMM. It's life support capabilities are less than the MMM. It's primary purpose is to rotate MMM crews for operations requiring more than one shift (e.g., solar blanket electrical installation) without having to remove the MMM and replace it with a similar unit.

MANNED MANIPULATOR MODULE & CREW TRANSPORT MODULE

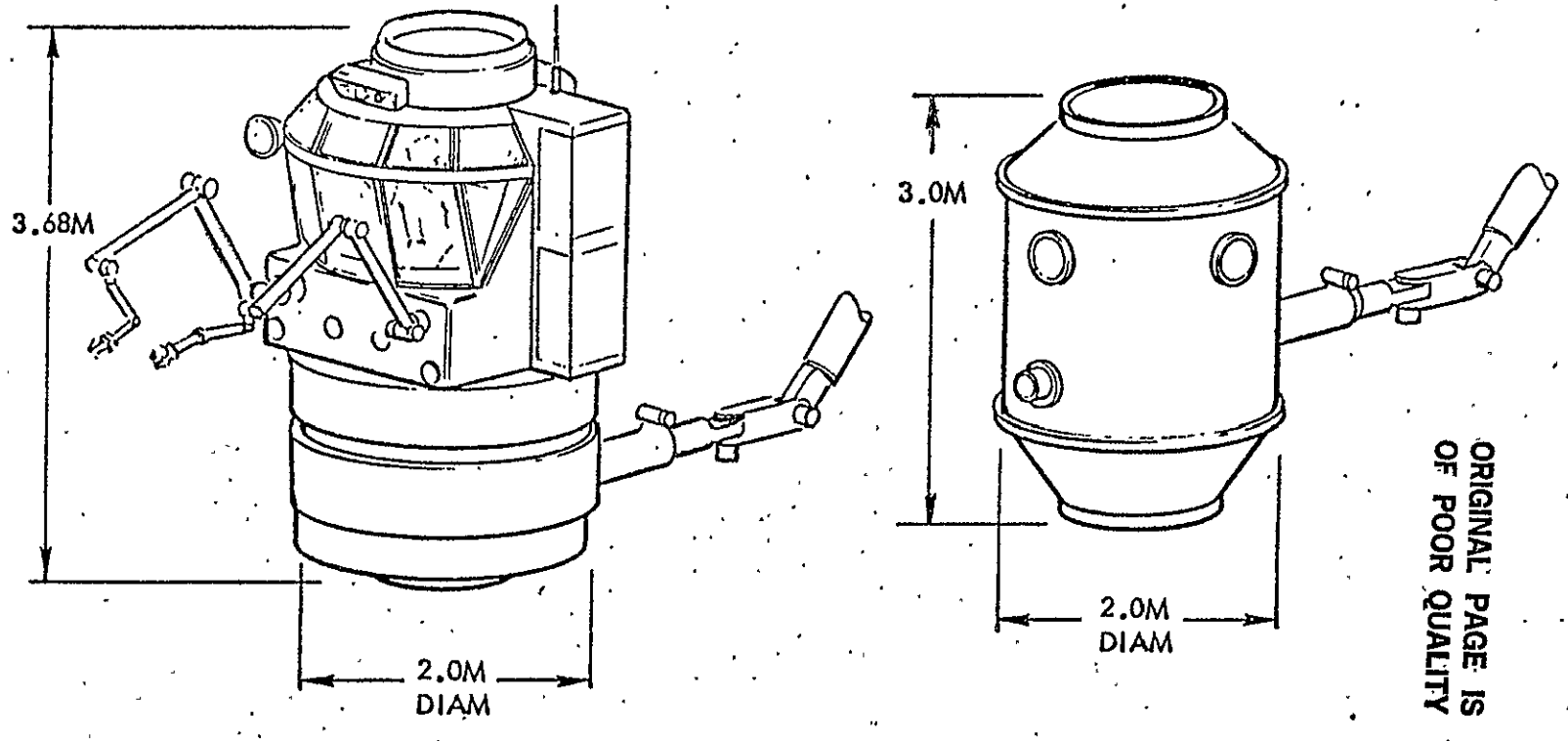

ORIGINAL PAGE IS
OF POOR QUALITY

SWITCHGEAR INSTALLATION

A traveling gantry, or platform installs and connects the electrical components, and attaches and tensions the various cables. The gantry is equipped with two MMM's and a switchgear assembly dispenser. The saddle clamps already have been installed on the crossbeam (this operation taking place in the tribeam fabrication facility) and the cables attached. The MMM to the right has a tensioning tool used to apply the correct tension to the cables and then clamp them.

SWITCH GEAR INSTALLATION

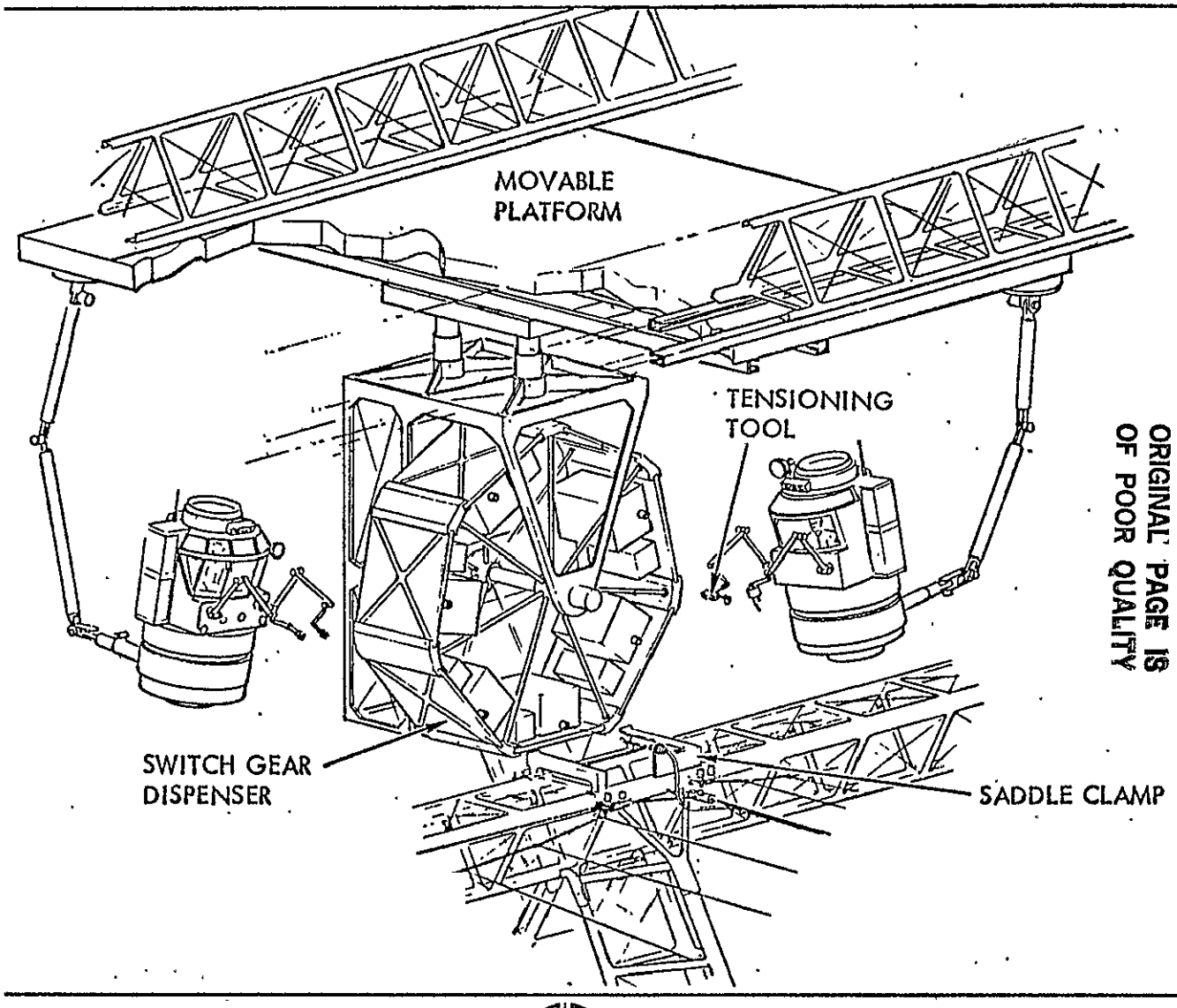

ORIGINAL PAGE IS
OF POOR QUALITY

CABLE TENSIONING DEVICE

This chart shows another view of the tensioning tool. The tensioning yokes are attached to the brackets with the clamp already attached. MMM's apply the tensioning screw jack at the left of the chart until the longitudinal cable is tensioned to the proper value. The end of the tool pushes against the clamp mounted on the yoke to maintain tautness. The cable clamp is then secured to the longitudinal cable.

CABLE TENSIONING DEVICE

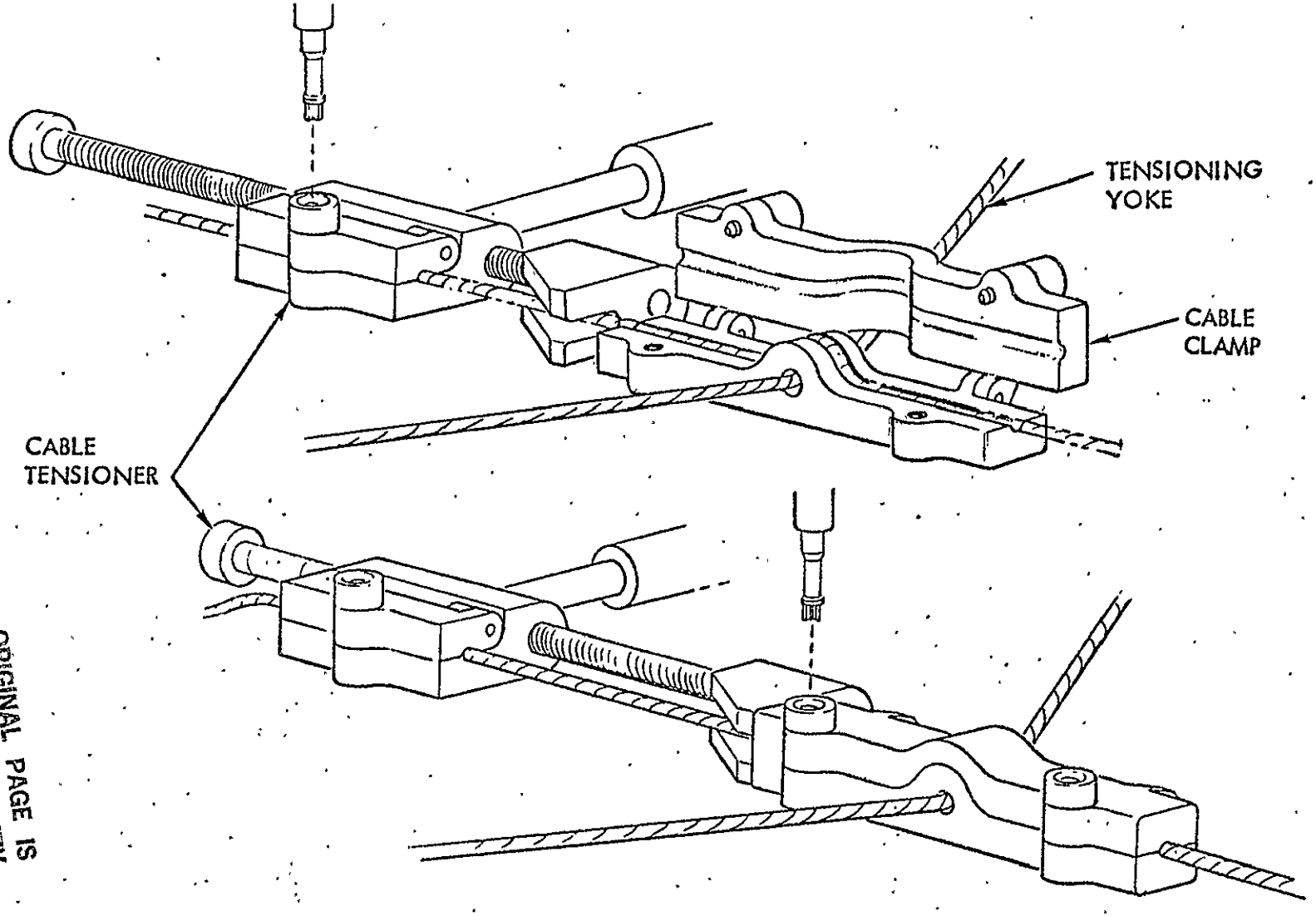

ORIGINAL PAGE IS OF POOR QUALITY

SWITCHGEAR ASSEMBLY DETAIL

In this chart, the switchgear magazine has been indexed to the proper position for installing the switchgear assembly, which is automatically inserted into the keyways on the saddle clamp and locked into position. An electrical connector attached to wiring from the solar blanket is automatically inserted into its flanged mating receptacle as the assembly advances into position.

SWITCH GEAR INSTALLATION DETAIL

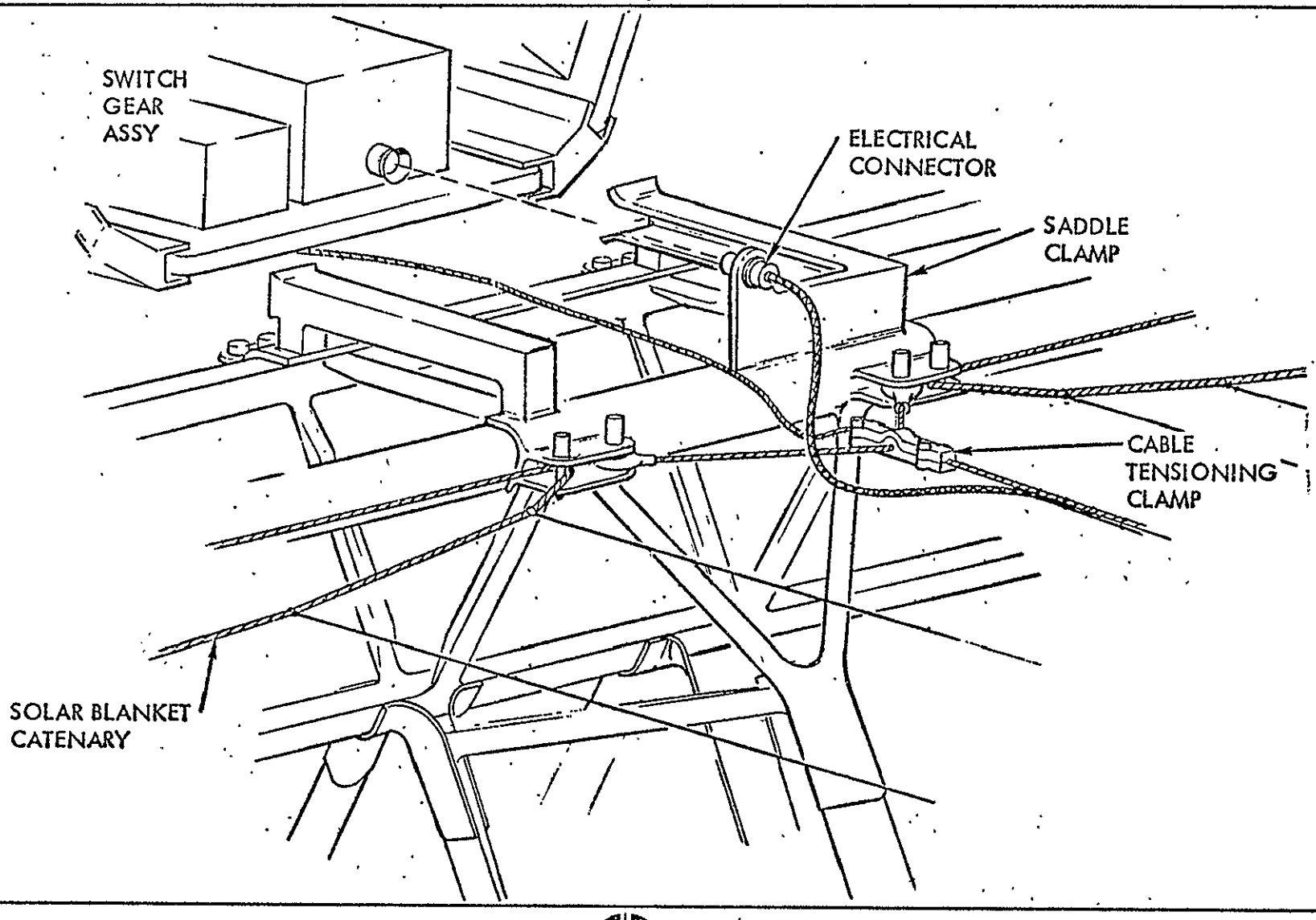

ORIGINAL PAGE IS
OF POOR QUALITY

SECONDARY FEEDER INSTALLATION

After the cables have been attached and tensioned and the switchgear assembly installed, secondary feeders must be secured to alternate cross-beams. This process utilizes the same gantry previously described. The aluminum feeder roll is mounted on the brackets which are attached to the magazine. As the gantry traverses laterally from one installation point to the next, the feeder is unrolled and welded to insulation mounts which have been installed at the tribeam fabrication facility.

SECONDARY FEEDER INSTALLATION

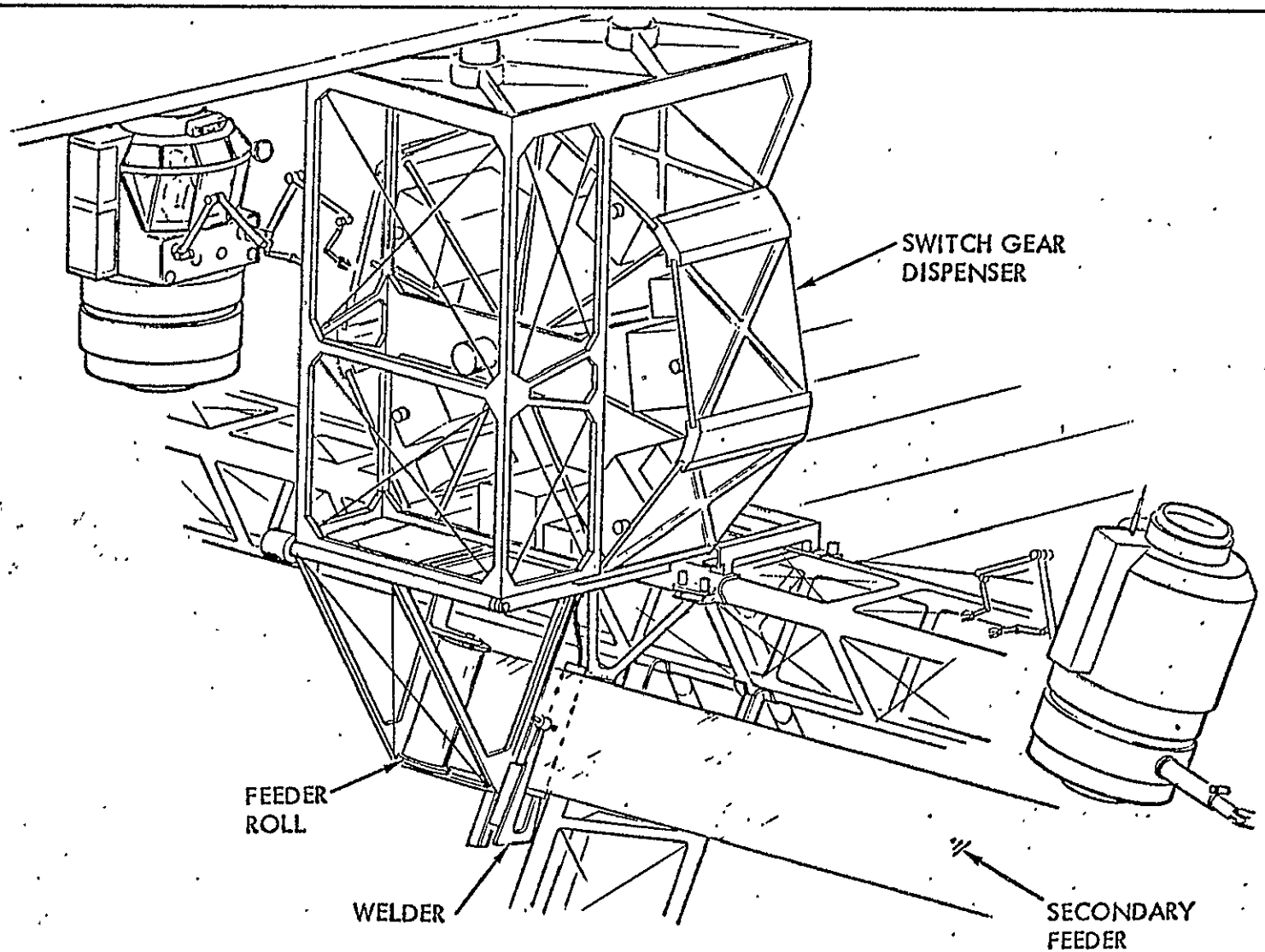

ORIGINAL PAGE IS
OF POOR QUALITY

PRECURSOR OPERATIONS

PRECEDING PAGE BLANK NOT FILMED

OVERALL SATELLITE CONSTRUCTION SCENARIO

The initial step in satellite precursor operations is establishment of a LEO base as shown in the lower left of the chart. Crew and power modules are transported to LEO by Shuttle derivatives and assembled. When the base is fully operational, Shuttle external tanks are delivered and mated to form construction fixtures for SCB construction. The chart shows a completed SCB. Since the more economical HLLV will not be available and since overall plans specify an EOTV test vehicle, it is probable that only the center trough of the SCB would be constructed initially. This trough would be used to fabricate the pilot plant EOTV with antenna. After proof of concept and SPS go-ahead, the remainder of the SCB would be completed, the fleet of EOTV's constructed, and the SCB transferred to GEO, using one or more EOTV's for propulsion and altitude control. Upon reaching GEO, satellite construction would commence, with the logistics support as shown at the right of the chart.

OVERALL SATELLITE CONSTRUCTION SCENARIO

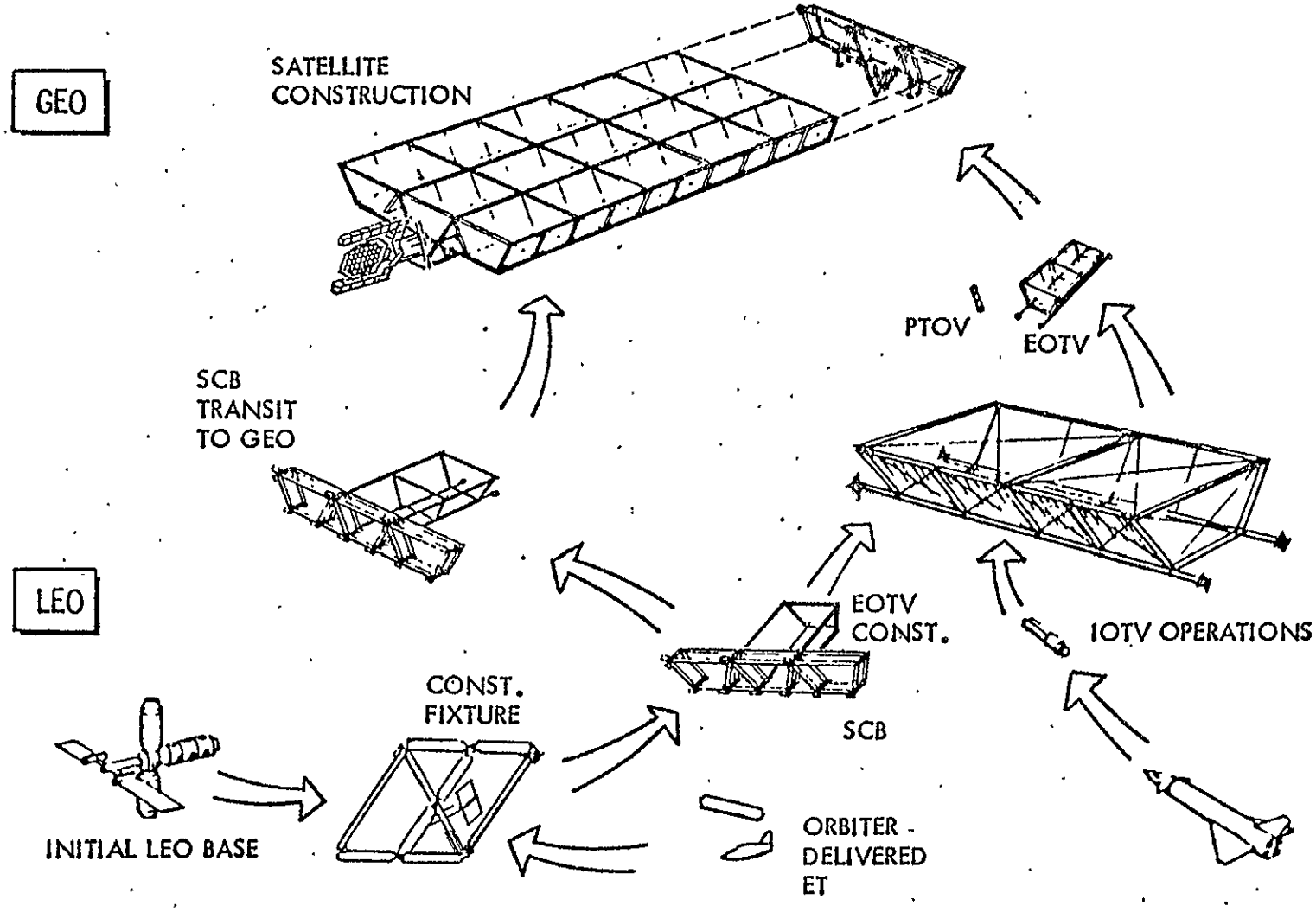

RENDEZVOUS AND DOCKING EXTERNAL TANKS

Two ET's are shown secured together by a module to which is docked a combination crew habitat and power module. A 2 meter beam machine has been installed by manned manipulator modules and has fabricated the beam shown at the bottom of the two ET's. This beam forms a part of the inner triangular structure which provides mounting for beam machines.

RENDEZVOUS & DOCKING EXTERNAL TANKS

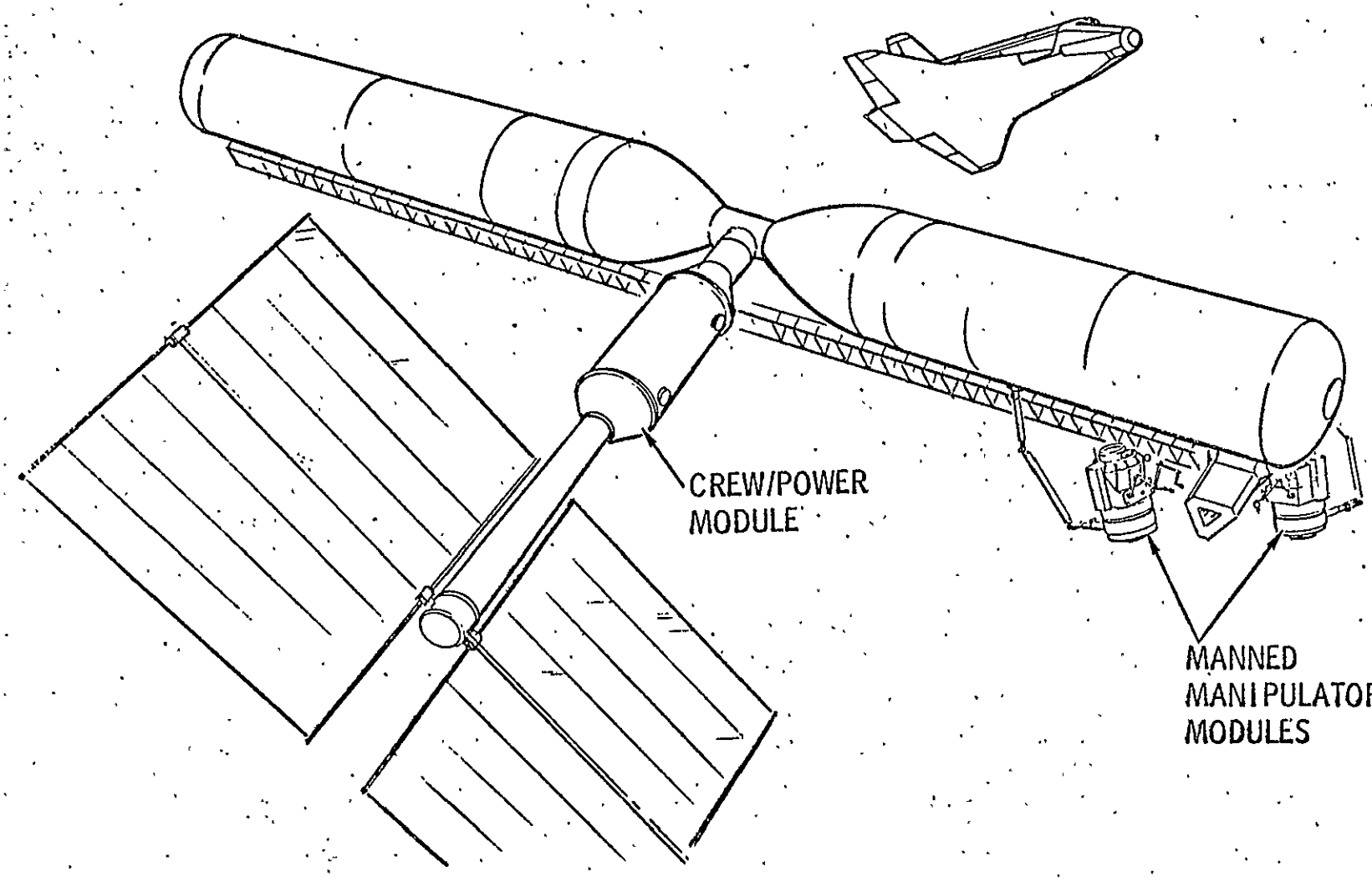

ORIGINAL PAGE IS
OF POOR QUALITY

MOBILE 79 M GIRDER FABRICATION FACILITY

The primary structure of the SCB consists of a diamond cross section formed by two triangles. A mobile diamond-shaped fixture formed by joining 8 orbiter external tanks is utilized for SCB primary structure fabrication. The beam machines are located at the tips of the structure enclosed by the external tanks. Nine machines are required to construct the four longerons, the four crossbeams and the diagonal beam. A combination crew and power module provides crew facilities and electrical power.

MOBILE 79M GIRDER FABRICATION FACILITY
(RIGHT HAND SHOWN)

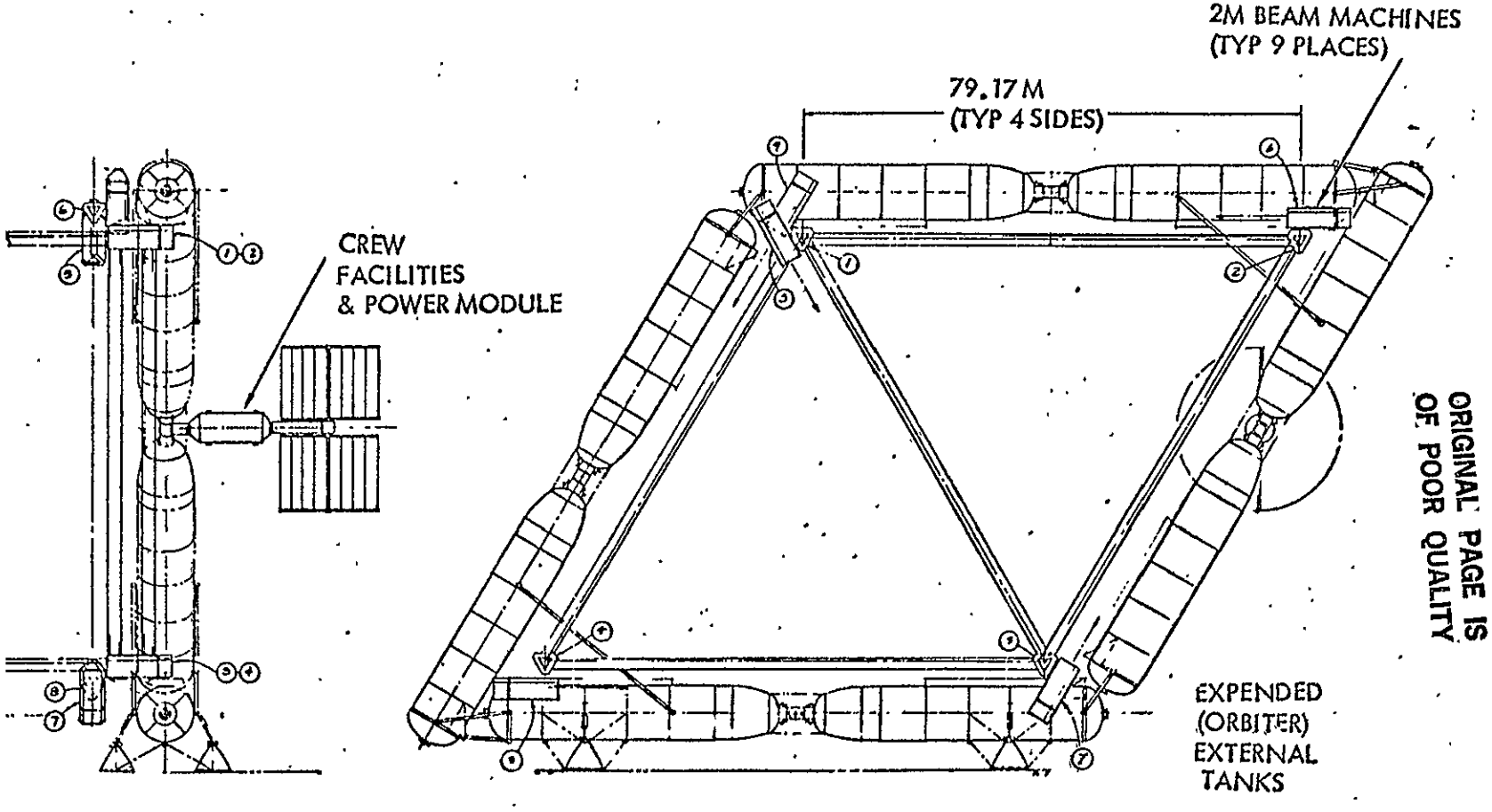

ORIGINAL PAGE IS
OF POOR QUALITY

INTERSECTION/INTERFACE - LONGITUDINAL POD WITH DIAMOND GIRDER

This chart shows structural interface details of a longitudinal pod intersection with the SCB diamond girder. Two mobile girder fabrication facilities have made attachments to the pod and are progressing outward in opposite directions, fabricating the diamond girder as they advance.

INTERSECTION/INTERFACE - LONGITUDINAL POD WITH DIAMOND GIRDER

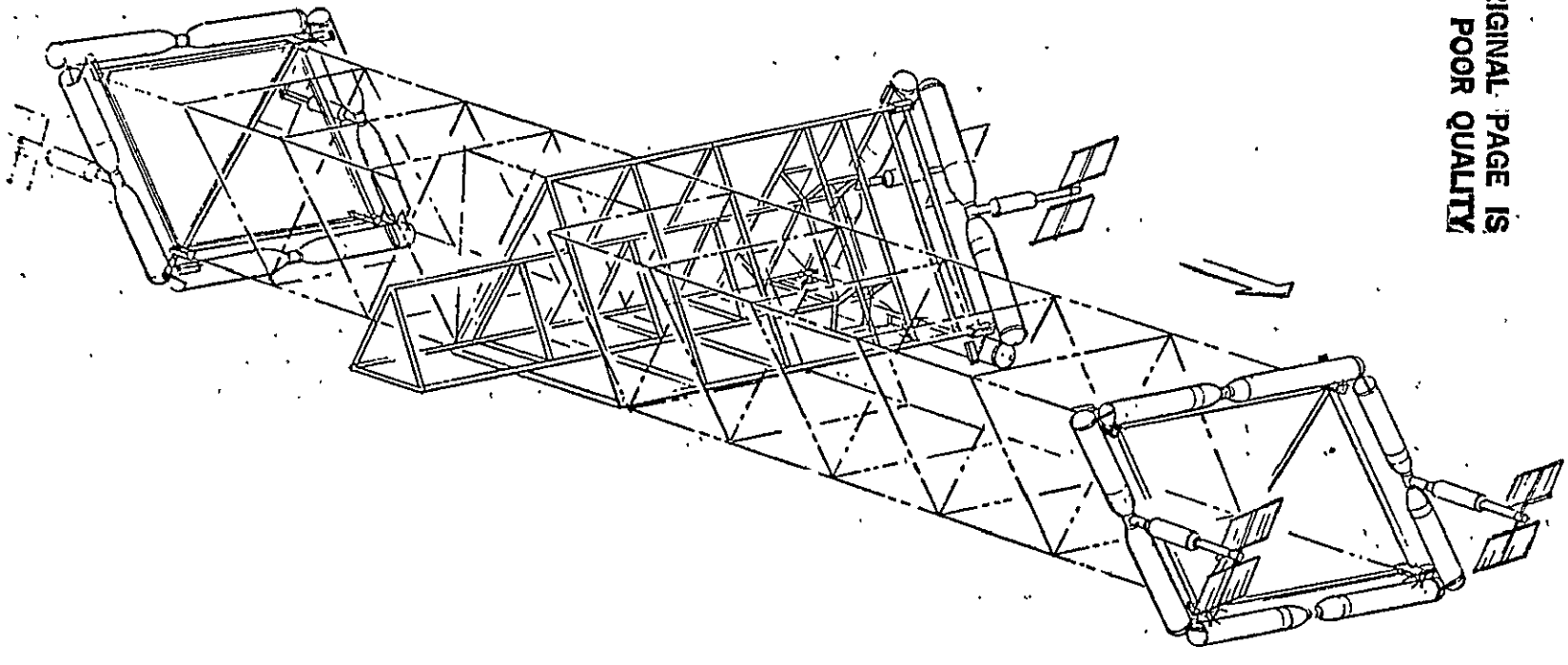

ORIGINAL PAGE IS
OF POOR QUALITY

CONSTRUCTION OF SCB TOP DECK GIRDER

The initial step in the SCB construction is to fabricate a tribeam longeron pod, or fabricator, as shown in the upper center of the chart. Two mobile 79 meter girder fabrication facilities are then positioned on either side of the longeron pod and fabricate sufficient lengths of the diamond-shaped girder to allow for attachment to the pod. When the attachment is complete, the girder fabricators resume fabrication, moving away in opposite directions from the pod as shown. At the proper spacing intervals, additional longeron pods are inserted, until the entire upper deck of the SCB has been completed. However, for the precursor concept shown herein, only sufficient deck length to support completion of the center trough would be constructed initially.

CONSTRUCTION OF SCB TOP DECK GIRDER

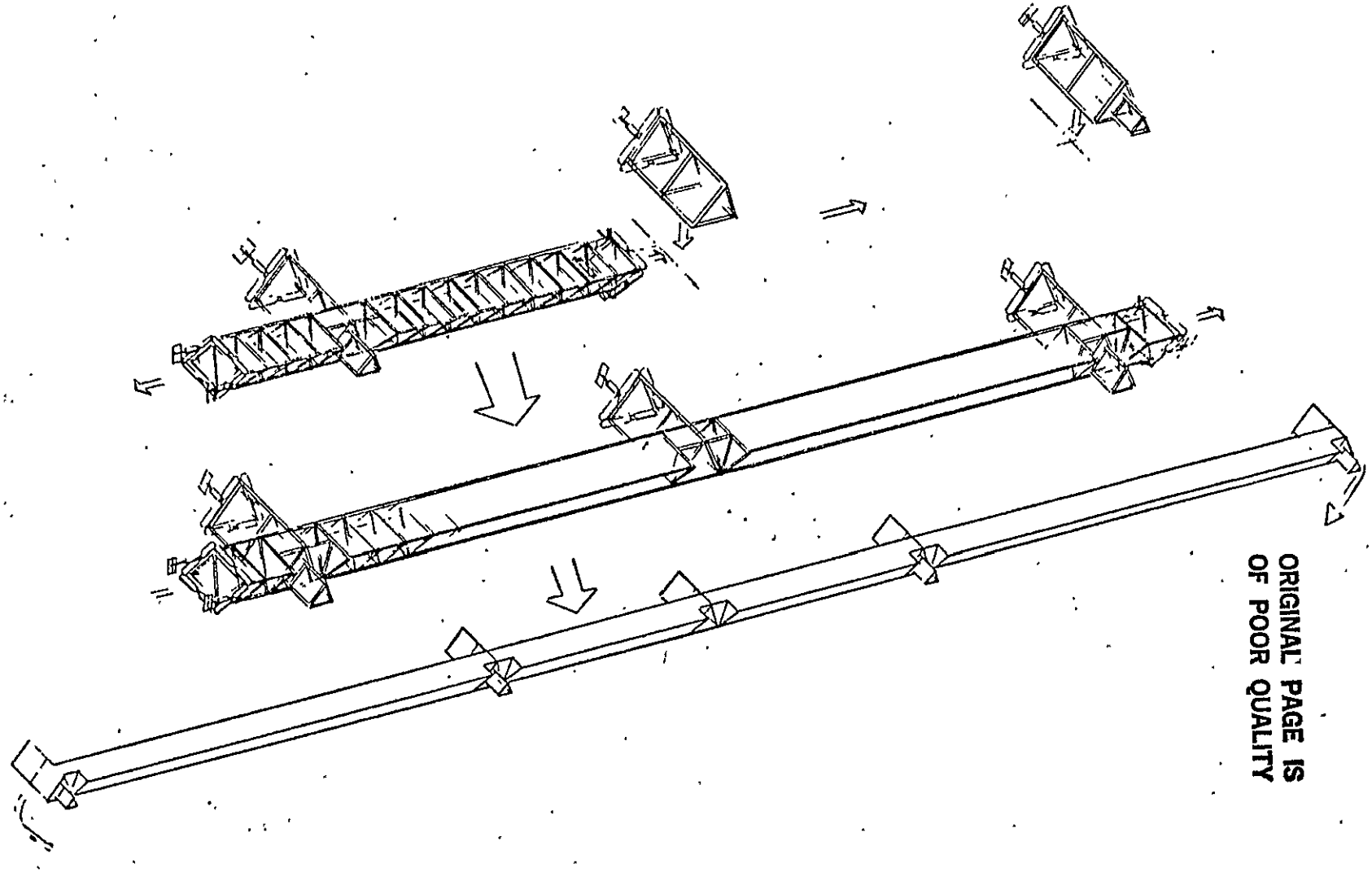

ORIGINAL PAGE IS
OF POOR QUALITY

ASSEMBLY SEQUENCE - SCB MAIN STRUCTURAL ELEMENTS

As shown on the preceding chart, initial fabrication commences at the center of the top deck (1), progressing outwards on each side until the top of the center trough has been completed. One side of the center trough is then fabricated downward at the proper angle (2), turning the corner at the bottom to complete the lower deck. The other side of the trough is fabricated as shown for attachment to the lower deck, completing the main structure of the center trough. This is followed by installation of the secondary structure (solar converter installation and slip ring facilities). After construction of the SPS precursor satellite, the remainder of the primary structure is completed in the sequence shown, progressing outward on the upper deck, completing the end diagonals and lower deck, and then the remaining diagonals, followed by installation of the outboard troughs secondary structure and installation facilities.

ASSEMBLY SEQUENCE - SCB MAIN STRUCTURAL ELEMENTS

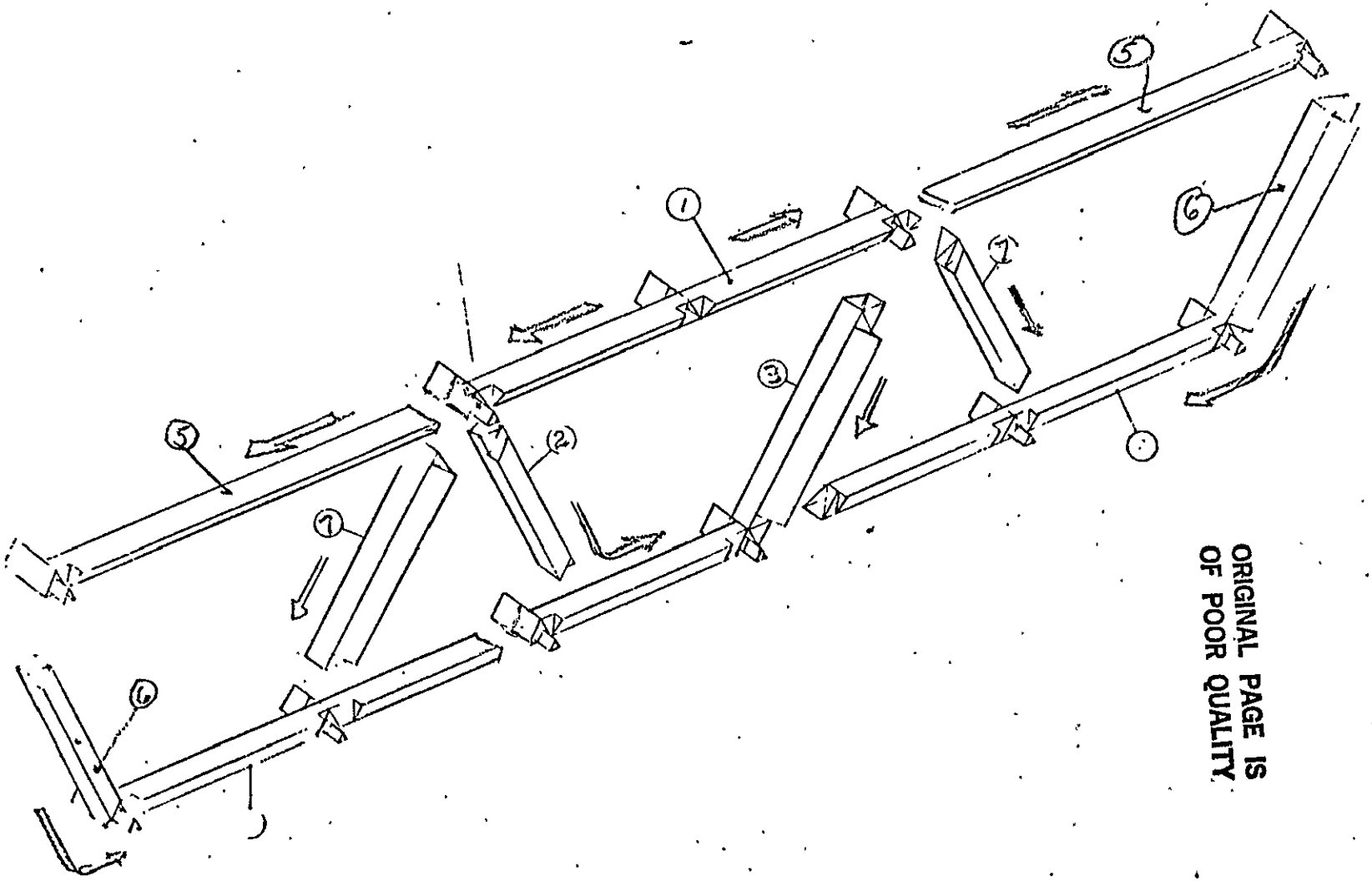

ORIGINAL PAGE IS
OF POOR QUALITY

EOTV/DEMO SPS
SATELLITE CONSTRUCTION BASE (PERSPECTIVE)

This is a perspective of the preceding chart. In the left an exploded view shows the primary and secondary structure. The completed base is at the right.

EOTV/DEMO SPS
SATELLITE CONSTRUCTION BASE (PERSP)

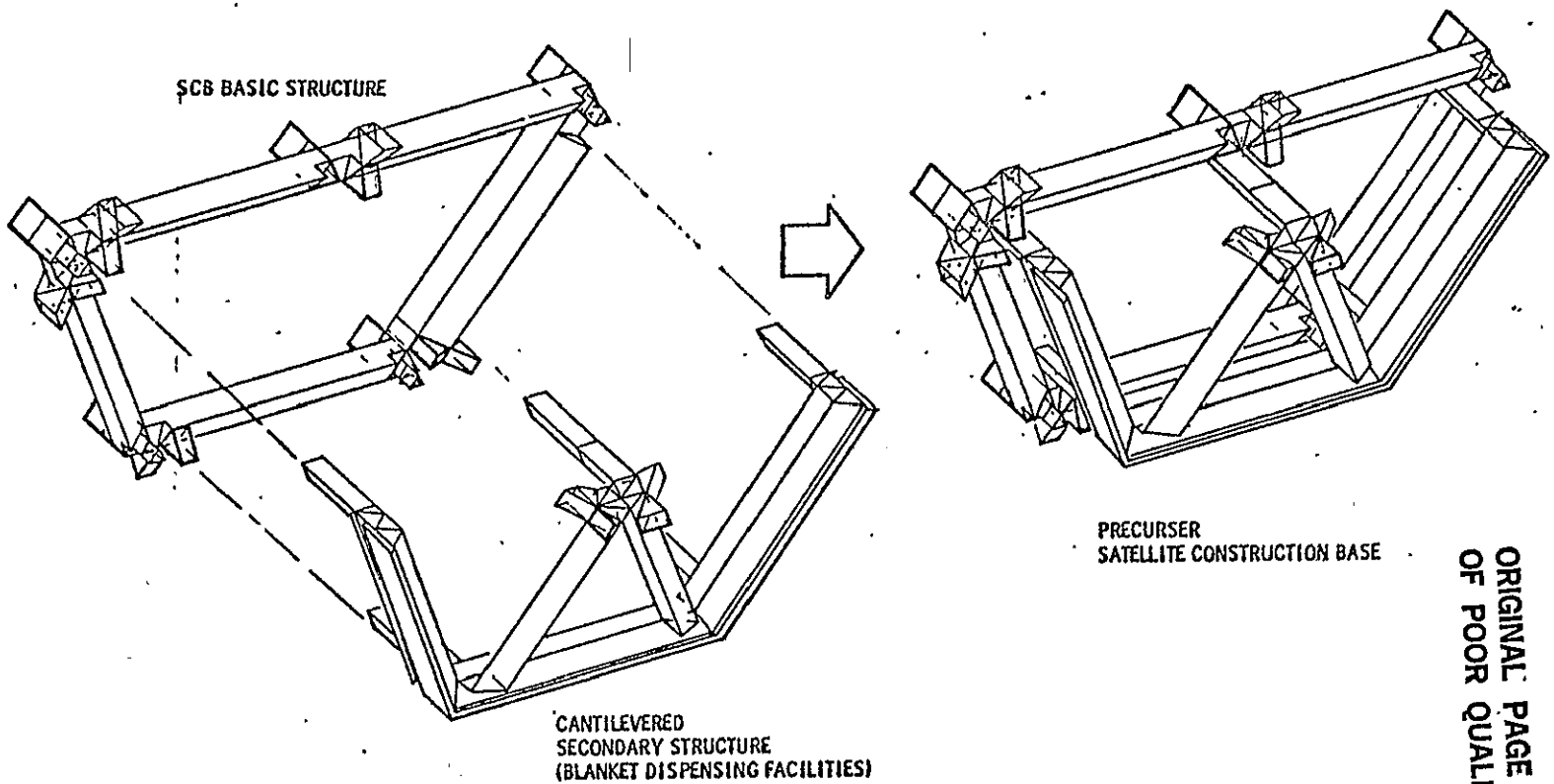

ORIGINAL PAGE IS
OF POOR QUALITY

EOTV/DEMO SPS REFERENCE CONFIGURATION

An end view of the slip rings and antenna supporting structure is shown. The bottom view shows the location of the slip rings or rotary joint relative to the EOTV structure. This configuration is identical to the installation in the center trough of the satellite.

The upper portion of the chart shows the location of the structure which forms the rotating portion of the joint. The transverse element is the base of the U shaped structure which contains the trunnion joints and the antenna.

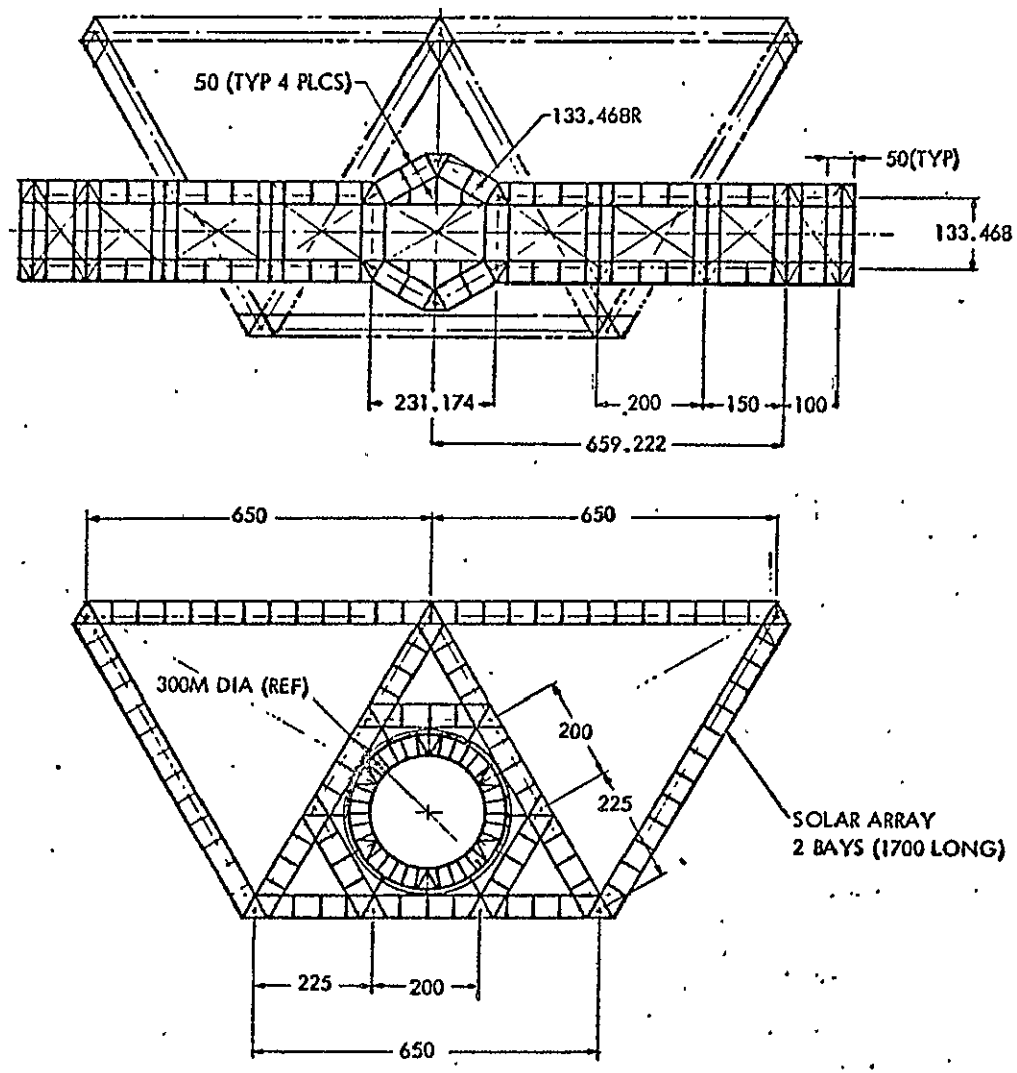

ORIGINAL PAGE IS
OF POOR QUALITY

EOTV/DEMO SPS CONSTRUCTION SEQUENCE
SPACE FRAME ANTENNA

The mobile platform has adapters which contain the beam fabricators required for installation of the antenna structure. Only sufficient structure to support the number of mechanical modules required for test purposes will be completed.

EOTV/DEMO SPS CONSTRUCTION SEQUENCE
SPACE FRAME ANTENNA

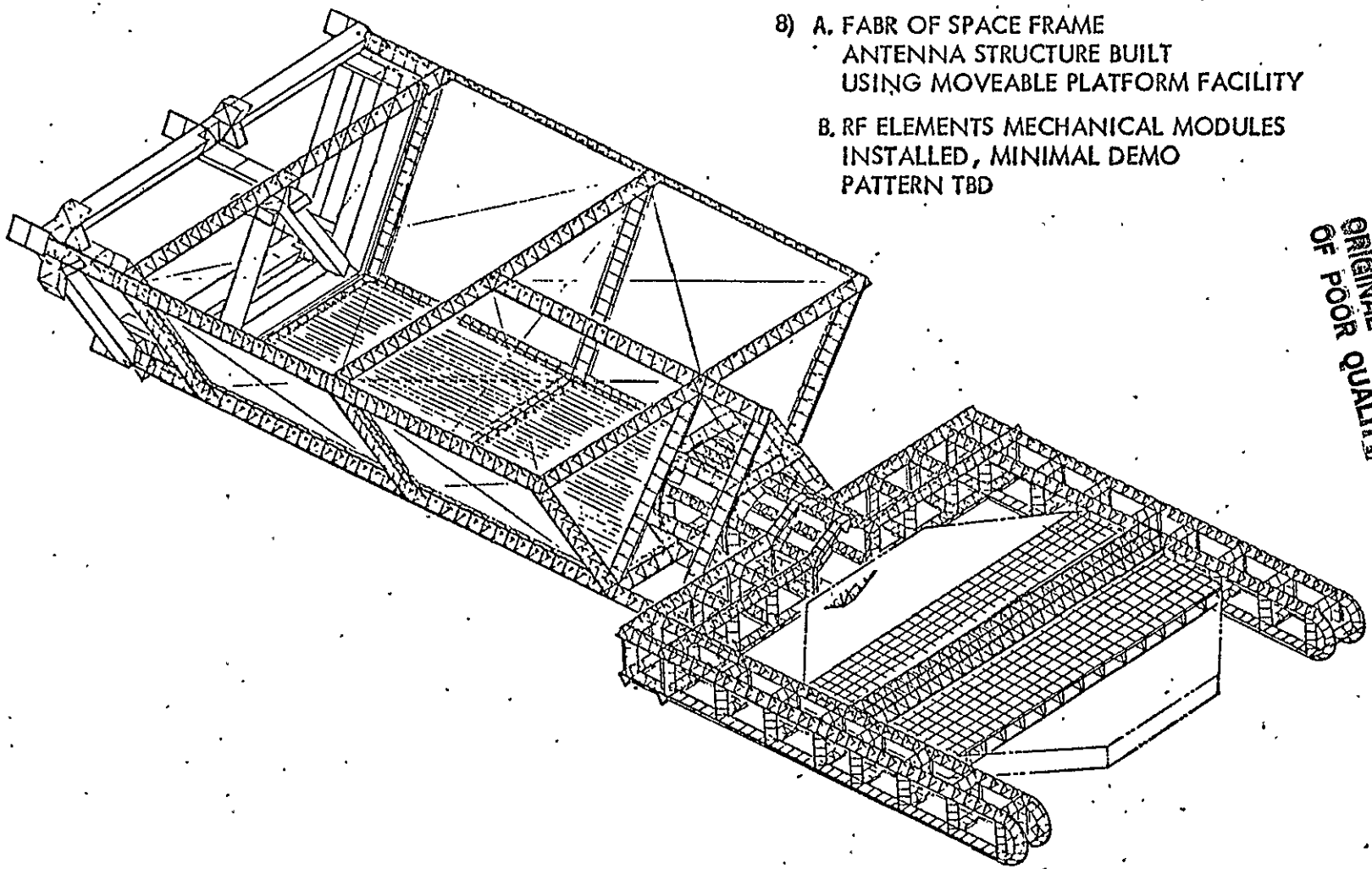

8) A. FABR OF SPACE FRAME ANTENNA STRUCTURE BUILT USING MOVEABLE PLATFORM FACILITY

B. RF ELEMENTS MECHANICAL MODULES INSTALLED, MINIMAL DEMO PATTERN TBD

ORIGINAL PAGE IS OF POOR QUALITY

EOTV/DEMO SPS CONSTRUCTION SEQUENCE
ELECTRICAL PROPULSION SYSTEM INSTALLATION

This chart shows the virtually completed SPS precursor satellite. Both solar converter bays and the required portion of the antenna have been completed. Any additional installation work on the electrical propulsion pods installed on the end of the bay just disconnected from the SCB will be accomplished by free flying facilities.

EOTV/DEMO SPS CONSTRUCTION SEQUENCE
ELECTRICAL PROPULSION SYSTEM INSTALLATION

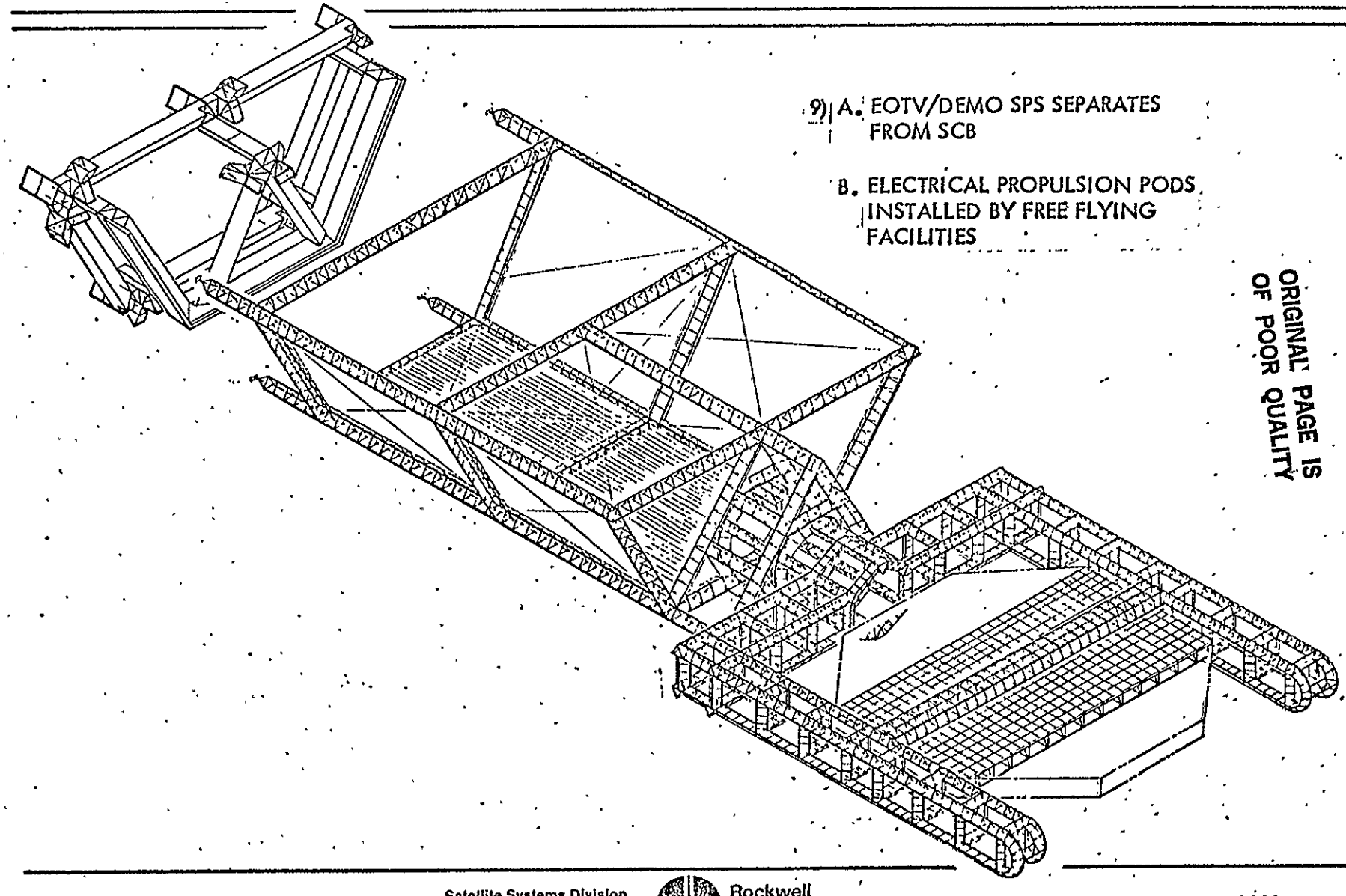

9) A. EOTV/DEMO SPS SEPARATES FROM SCB

B. ELECTRICAL PROPULSION PODS INSTALLED BY FREE FLYING FACILITIES

ORIGINAL PAGE IS OF POOR QUALITY

OPERATIONAL SATELLITE CONSTRUCTION BASE

Following completion of the SCB, the initial fleet of six EOTV's is constructed. The last of the six EOTV's is then utilized to transport the SCB to the GEO location where the first satellite will be constructed.

OPERATIONAL SATELLITE CONSTRUCTION BASE

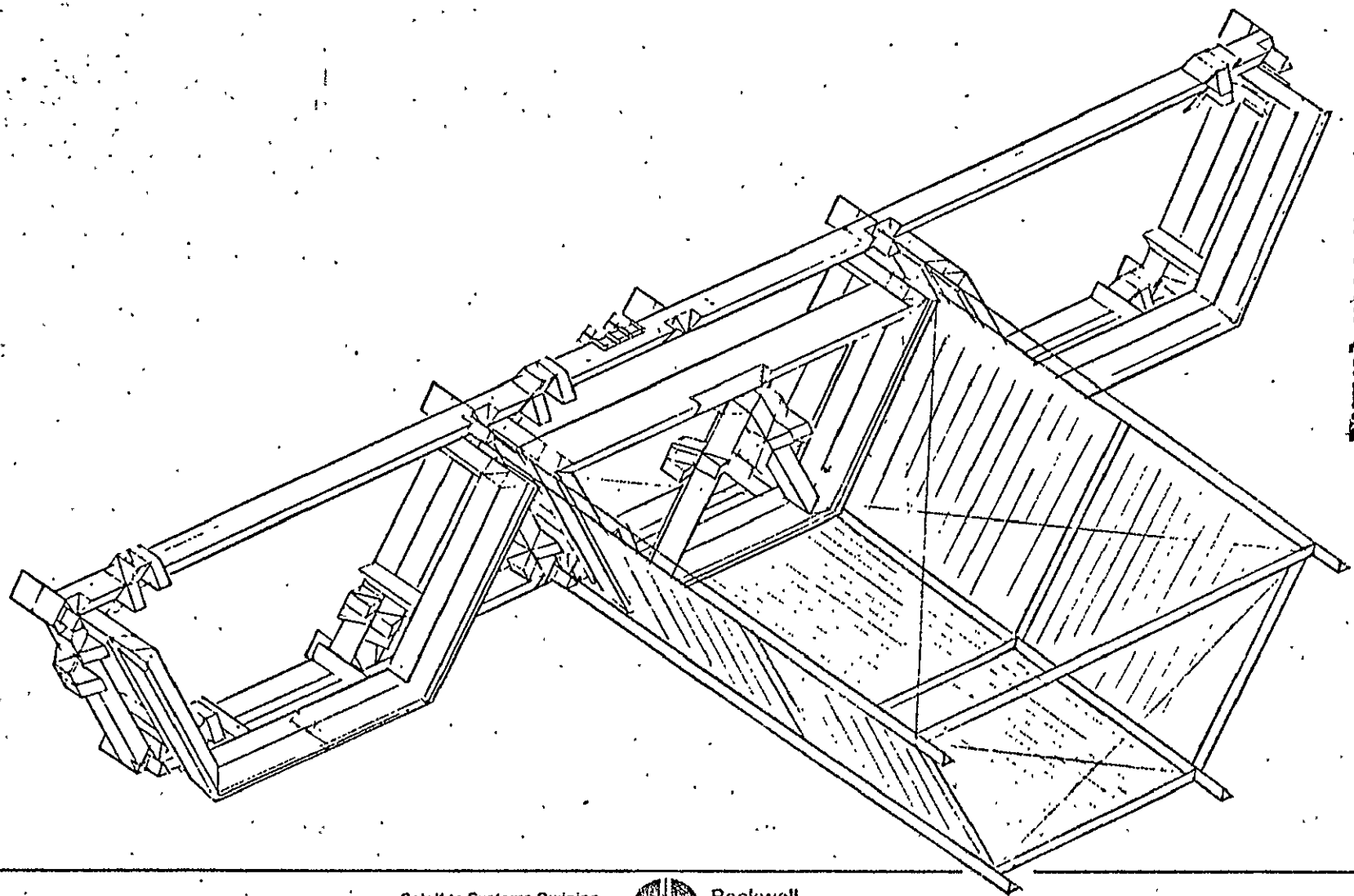

ORIGINAL PAGE IS
OF POOR QUALITY

RECTENNA CONSTRUCTABILITY

PRECEDING PAGE BLANK NOT FILMED

OPERATIONAL GROUND RECEIVING FACILITY (RECTENNA) TYPICAL

This perspective is a representation of a typical operational ground site. The receiving panels are arranged in rows within the inner ellipse. Immediately outside the eclipse is a series of power poles which carry the 40 kV dc buses around the perimeter of the panel installation. The 500 kV ac towers also ring the basic ellipse, but at a greater distance. The power conversion stations are located between the two arrays of power transmission lines. The entire site is fenced in for security as shown.

OPERATIONAL GROUND RECEIVING FACILITY (RECTENNA) - TYPICAL

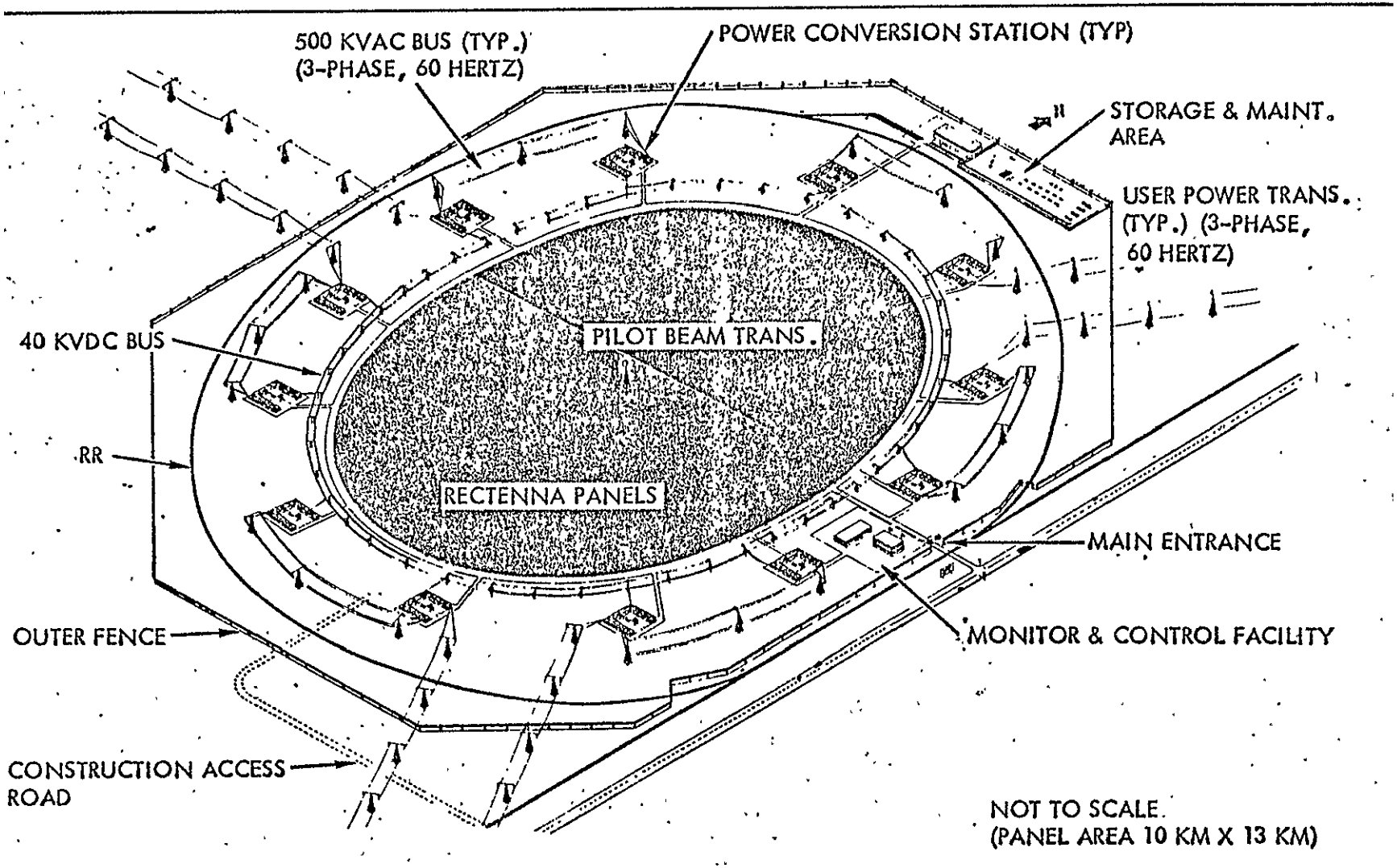

PANEL INSTALLATION

The panels are secured to two continuous concrete footings. A trade-off which considered eight individual footings versus continuous footings was made. A maximum wind force of 90 m/hr was assumed. It was determined that the amount of concrete required for either approach was essentially the same, but that the continuous footing concept was easier to install.

Each panel is secured to the footings at eight locations by fixtures which are imbedded in the concrete during the pouring operation. Mounting attachments which provide for longitudinal and lateral adjustment are secured to the fittings. Screw jacks on each of the rear attach points provide for panel adjustment and alignment.

The panel switch gears and feeder lines are mounted above ground behind each panel as shown, although it is recognized that either above or below ground runs for the feeders is feasible.

ORIGINAL PAGE IS
OF POOR QUALITY

PANEL INSTALLATION

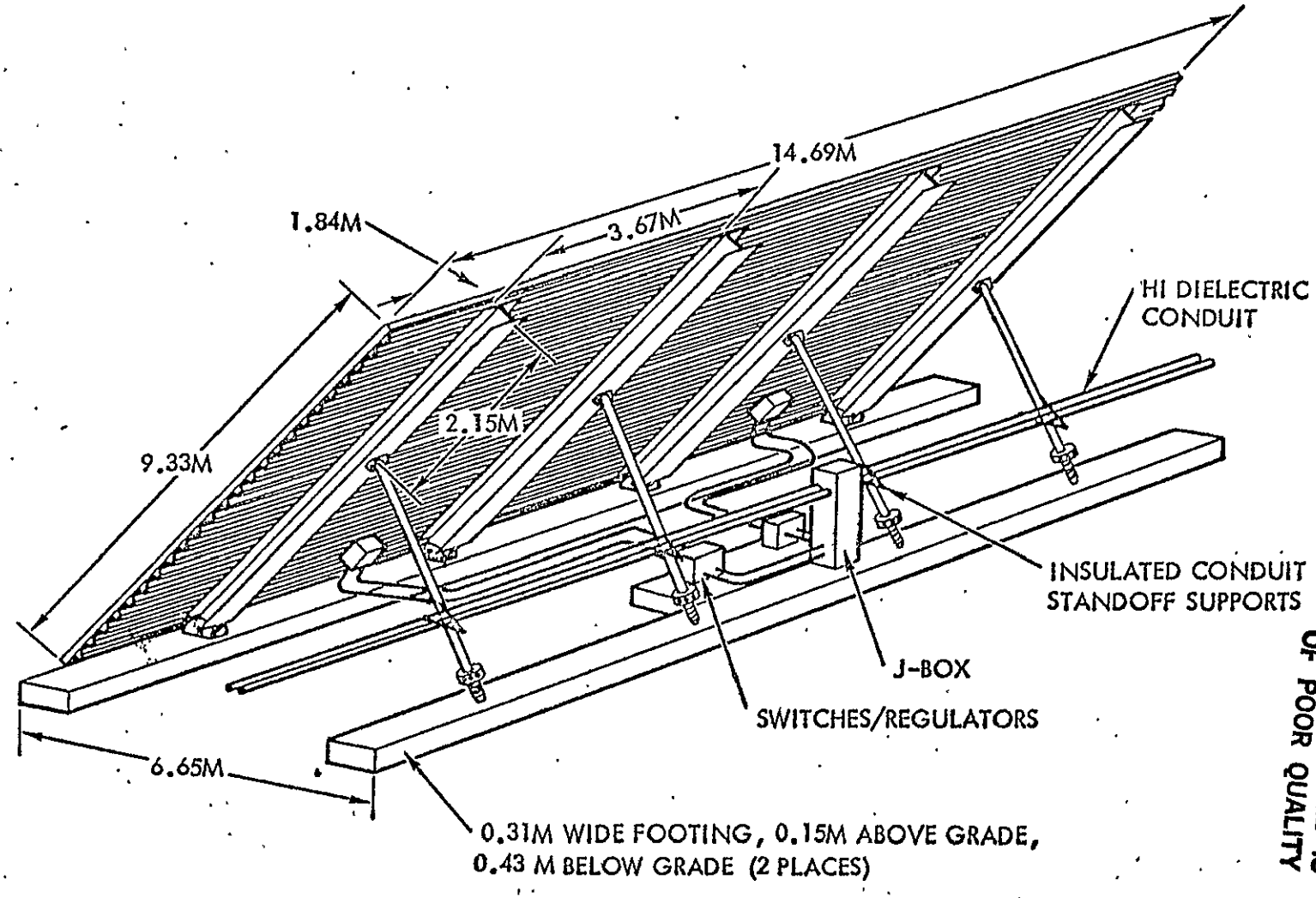

ORIGINAL PAGE IS OF POOR QUALITY

RECTENNA CONSTRUCTION SEQUENCE

There are nine major activities involved in rectenna site construction. In this chart, starting from left to right, the site must be surveyed, utilities and other supporting facilities installed, reference coordinates laid out, and the site cleared and leveled. Following this, more precise grading of the actual panel rows is conducted, footing trenches excavated, concrete poured, and the panels installed. The 40 kV dc and 500 kV ac periphery buses must then be installed, separated by the connecting converter stations.

RECTENNA CONSTRUCTION SEQUENCE

SITE SURVEY ENGINEERING

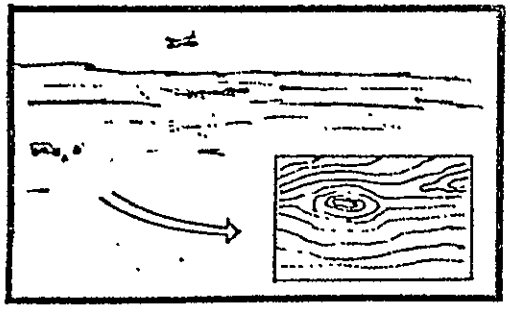

SUPPORT FACILITIES INSTALLATION

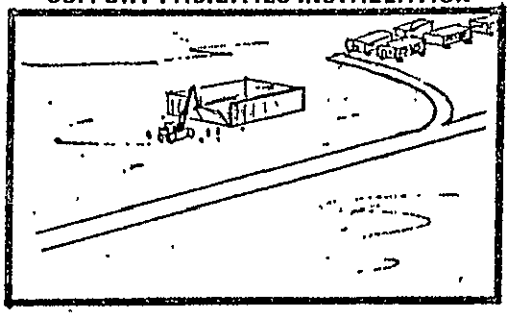

REFERENCE COORDINATES

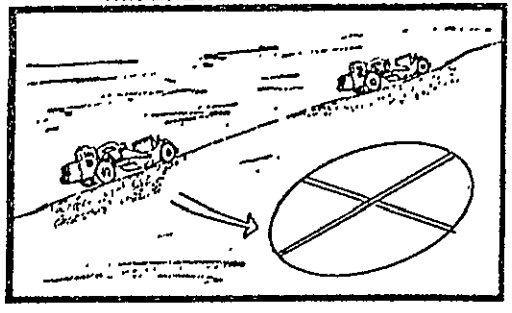

SITE CLEARING

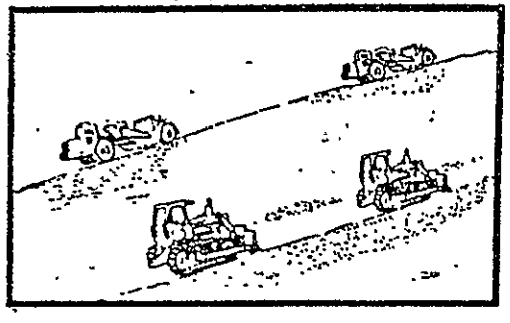

PANEL PAD GRADING

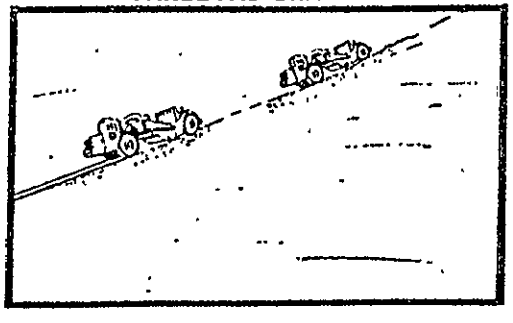

PANEL INSTRUMENT OPERATIONS

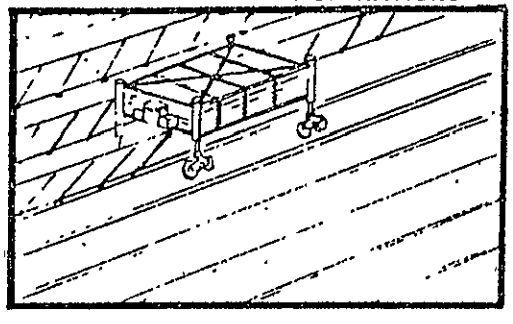

40 KVDC BUS INSTALLATION

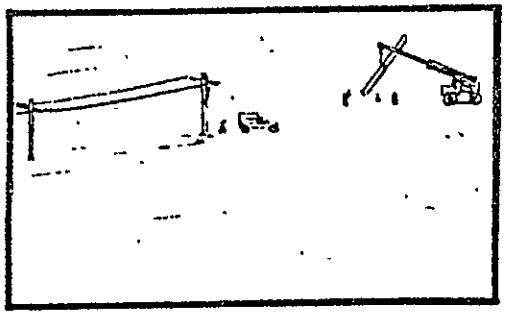

CONVERTER STATION INSTALLATION

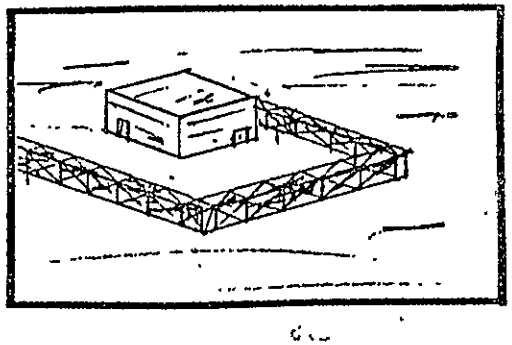

500 KVAC BUS INSTALLATION

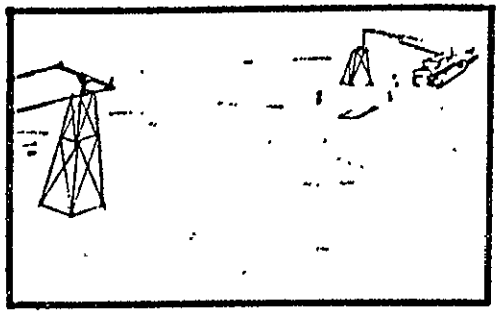

ORIGINAL PAGE IS OF POOR QUALITY

RECTENNA SITE CONSTRUCTION SCHEDULE

The construction schedule is predicted on an overall time span of completion of approximately 15 months. This schedule assumes that the site selection already has been made and that the procedures incident to land acquisition have been completed. The overall approach, after installation of utilities and support facilities, entails clearing and grading in sections, followed by footing excavation, concrete pouring, and panel installation. Manpower and equipment estimates, summarized in subsequent charts, are based on this schedule.

RECTENNA SITE CONSTRUCTION SCHEDULE

SITE PREPARATION

- SITE SURVEY, A&E PLANNING
- UTILITIES & FACILITIES
- REFERENCE GRID
- CLEARING & GRUBBING
- GRADING
- RAIL & ROAD INSTALLATION

RECTENNA CONSTRUCTION

- CONCRETE FOOTINGS
- PANEL ASSEMBLY
- PANEL INSTALLATION
- CONTROL CENTER CONSTRUCTION
- ELECTRICAL HOOKUP & CHECKOUT
- 40 KVAC BUS INSTALLATION
- CONVERTER STATIONS
- 500 KVAC BUS INSTALL

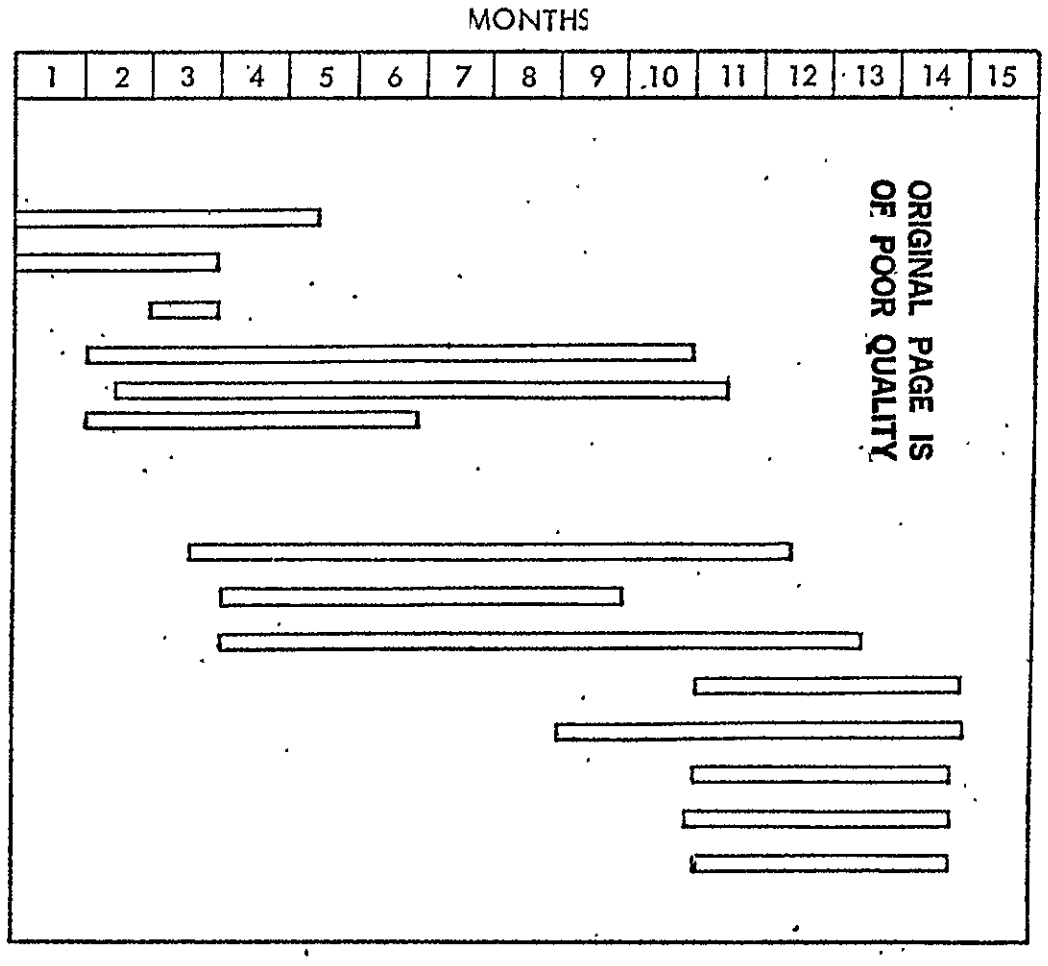

ORIGINAL PAGE IS OF POOR QUALITY

CENTRAL PANEL FACTORY

The concept of a central panel factory to assembly rectenna panels was selected. A concept for such a factory is shown. The factory sizing (i.e., number of assembly lines) was based on a required production rate of 108 panels per hour and reflects largely automatic processing. The panel structure (I beams and hats) are first assembled, the substrate containing the electronic elements secured, and the panel is checked out. Completed panels are conveyed to a magazine where they are loaded for delivery to the installation site. Upon completion of a rectenna farm, the equipment will be dismantled and moved to a new site.

Crew requirements are summerized in the lower left of the chart.

CENTRAL PANEL FACTORY

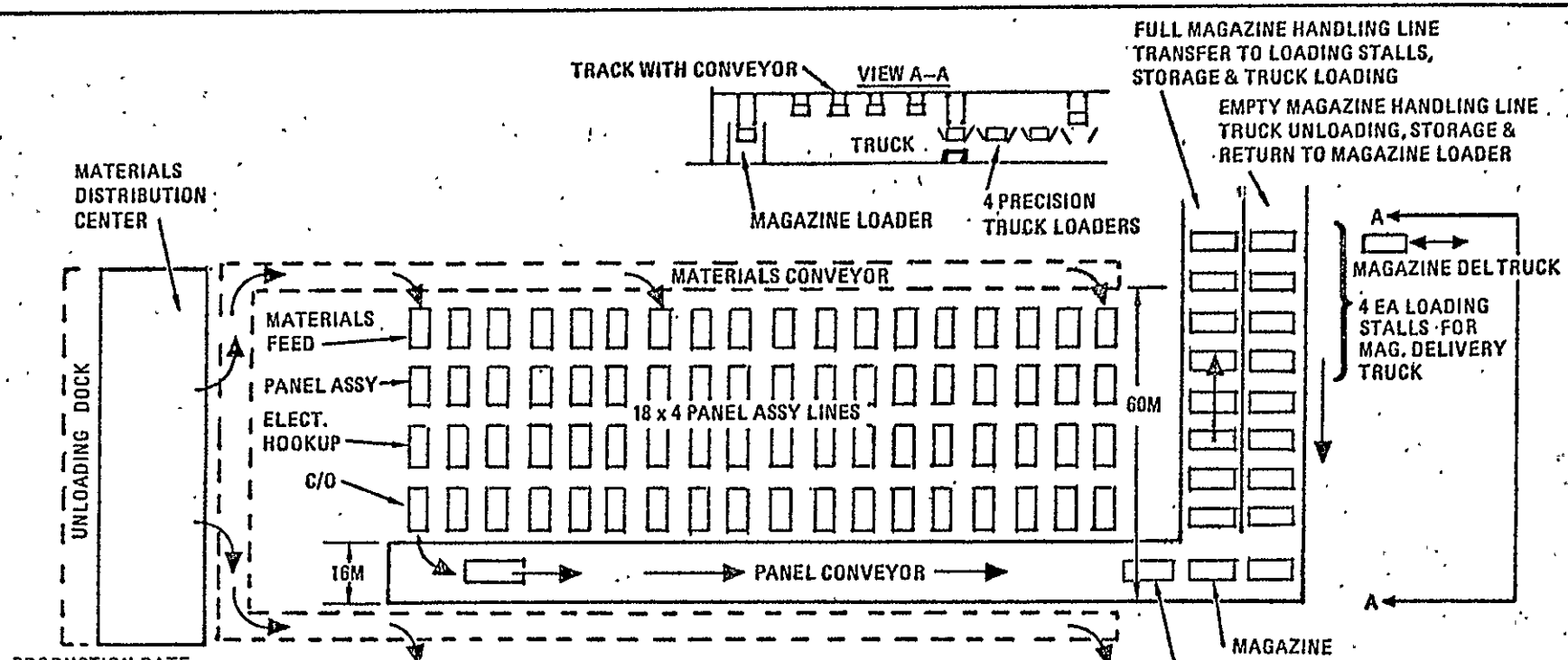

PRODUCTION RATE:
108 PANELS/HR
12.9–PANEL MAGAZINE LOADINGS/HR

CREW REQMTS:

3 MEN AT ASSY STA	
2 MEN AT ELECT. STA	
5 x 72 ASSY LINES	360
MAGAZINE LOADERS	12
MATL'S DISTRIBUTION	18
SERVICING/MAINTENANCE	36
	426
SUPERVISION	42
SHIFT CREW	468
4 SHIFT CREWS	1872

ORIGINAL PAGE IS OF POOR QUALITY

PANEL LOADING SEQUENCE

The sequence of panel loading entails (1) elevating the installation machine to permit access by the delivery truck, (2) placement of the delivery truck, (3) securing the installation machine magazine retention mechanism to the panel magazine, (4) elevating the panel magazine to permit the delivery truck to depart, and (5) lowering the bottom panel into position for attachment to the footings.

PANEL LOADING SEQUENCE

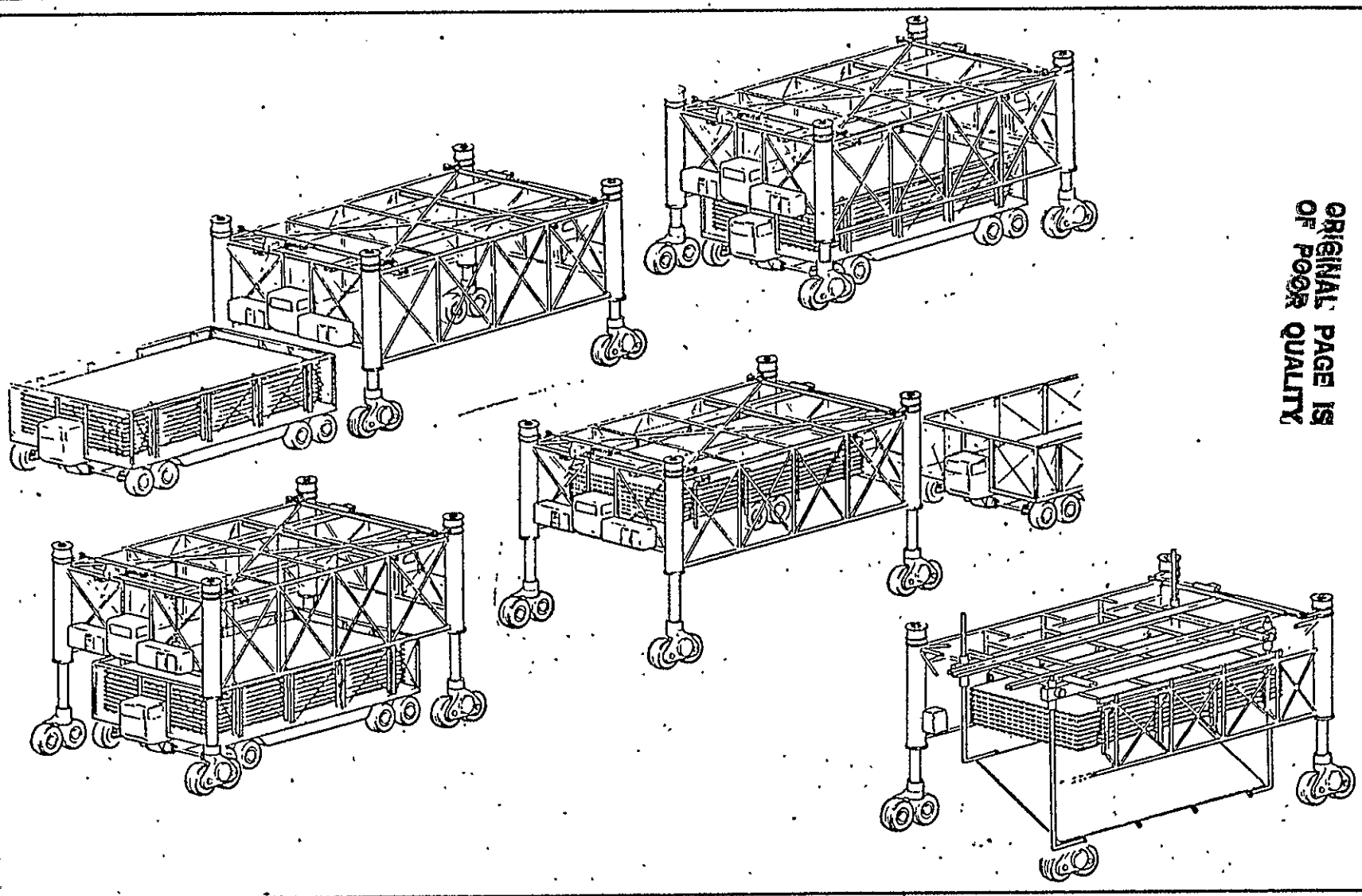

ORIGINAL PAGE IS
OF POOR QUALITY

CONSTRUCTION CREW REQUIREMENTS
(4 SHIFTS)

This chart is self-explanatory.

CONSTRUCTION CREW REQUIREMENTS
(4 SHIFTS)

	SHIFT SIZE	TOTAL	
SITE PREPARATION (SINGLE SHIFT)	280	280	
PANEL ASSEMBLY FACILITY	468	1872	4 SHIFT TOTAL
CONCRETE PRODUCTION	55	220	
FOOTING EXCAVATION	81	324	
CONCRETE POURING	289	1156	
PANEL ATTACH FITTINGS	80	320	
PANEL INSTALLATION	225	900	
ELEC. INS. & HOOKUP	1050	4200	
TOTAL	2528	9272	

NOTE: 3 8-HR SHIFTS/DAY, 7 DAYS PER WEEK, 2 DAYS OFF PER SHIFT/WEEK, 4 SHIFTS TOTAL

ORIGINAL PAGE IS OF POOR QUALITY

CONSTRUCTION SUMMARY

Rectenna mass, crew requirements, and equipment needs are summarized. Approximately 85% of the total 1207×10^6 kg attributed to panels is steel. The concrete requirements, approximating the volume of Hoover Dam, are predicted on a 90 mph wind. Additional analysis may result in a lowering of this requirement.

Of the equipment; electrical installation trucks (panel trucks) and concrete trucks comprise the greatest numerical requirement. All equipment, with the exception of installers and trucks used to deliver and install panels, is of current design and in service.

CONSTRUCTION SUMMARY

- SCHEDULE: 15 MONTHS

RECTENNA MASS -	PANELS	1207×10^6 kg
	CONCRETE	7176
	FEEDERS	1
	REINFORCE STEEL	51
		8435×10^6 kg

- CREW

SHIFT SIZE	2474
TOTAL CREW FOR 24 HR/7DAY OPERATION	9272

- EQUIPMENT

SCRAPERS/GRADERS	67
DUMP TRUCKS	50
BULLDOZERS	50
CRANES	34
BACK HOES	17
TRACTOR/TRAILER TRUCKS	48
CONCRETE TRUCKS	190
CONCRETE POURING RIGS	10
PANEL INSTALLERS	40
PANEL MAGAZINE TRUCKS	14
ELECTRICAL INSTALLATION TRUCKS	229
MISC. JEEPS, PICKUPS, ETC.	

ORIGINAL PAGE IS OF POOR QUALITY

RECTENNA CONSTRUCTION - KEY ISSUES

Five general categories comprise key issues which affect rectenna construction. Site characteristics could impact both crew/equipment requirements and the specified completion schedule. Approval of the environmental impact upon and other permits have required up to five years lead time for some projects. Site operational control is a necessary element of any undertaking of this size and has not been addressed to date. Lightening protection has been the subject of some study by Rice University, but no definite conclusions have been reached to date. Finally, resources (men, equipment, material) for one site are significant and will require considerable advance planning for manpower availability, equipment build-up, and availability of the materials.

RECTENNA CONSTRUCTABILITY - KEY ISSUES

- SITE SELECTION
  - TOPOGRAPHY
  - DRAINAGE
  - SOIL
  - PREVAILING WEATHER
  - INDUSTRY AND TRANSPORTATION
- ENVIRONMENTAL IMPACT
  - ENVIRONMENTAL IMPACT REPORT
  - PERMITS
- SITE OPERATIONAL CONTROL
  - COMMUNICATIONS
  - LOGISTICS AND TRAFFIC
  - OPERATIONAL SEQUENCE
- LIGHTNING PROTECTION
- RESOURCES AVAILABILITY
  - MATERIALS
  - EQUIPMENT
  - MANPOWER

ORIGINAL PAGE IS
OF POOR QUALITY

SUMMARY AND CONCLUSIONS

This chart is self-explanatory.

SUMMARY AND CONCLUSIONS

- OVERALL SATELLITE CONSTRUCTION CONCEPT FEASIBLE SUBJECT TO RESULTS OF PLANNED TECHNOLOGY PROGRAMS
- SINGLE PASS SATELLITE CONSTRUCTION CONCEPT LESS COMPLEX THAN SERPENTINE APPROACH
- SINGLE PASS CONCEPT ADAPTABLE TO EITHER END OR CENTER MOUNTED ANTENNA
- USE OF EXTERNAL TANKS FOR INITIAL PRECURSOR FIXTURES APPEARS FEASIBLE
- CONSTRUCTION OF SINGLE SCB TROUGH INITIALLY FOR USE IN BUILDING PRECURSOR SATELLITE DESIRABLE
  - HLLV NOT AVAILABLE
  - PROOF OF CONCEPT AT EARLY DATE DESIRABLE
  - SCB CAN BE COMPLETED LATER
- EXISTING CONSTRUCTION EQUIPMENT DESIGNS ADEQUATE FOR RECTENNA SITE CONSTRUCTION EXCEPTING PANEL INSTALLATION
- EXTENSIVE MANPOWER AND EQUIPMENT REQUIRED TO COMPLETE RECTENNA IN 15 MONTHS SCHEDULE
- VARIABILITY IN SITE CHARACTERISTICS CAN IMPACT BOTH SCHEDULE AND CREW/EQUIPMENT REQUIREMENTS
- NO MAJOR TECHNOLOGY DRIVERS FOR RECTENNA SITE CONSTRUCTION

ORIGINAL PAGE IS OF POOR QUALITY

EXECUTIVE SUMMARY

G. M. HANLEY

DESIGN DEFINITION

- REFERENCE CONCEPT
  - A. A. NUSSBERGER
- SOLID-STATE CONCEPTS
  - W. V. McRAE
- MICROWAVE TRANSMISSION SYSTEM - C. Y. TOMITA
- LASER ENVIRONMENTAL STUDY - G. M. HANLEY

CONSTRUCTION & OPERATIONS

- R. F. WADSWORTH

TRANSPORTATION SYSTEM DEFIN.

- R. P. BERGERON

PROGRAM AND COST DATA

- F. W. VGN FLUE

PRECEDING PAGE BLANK NOT FILMED

REFERENCE HLLV LAUNCH CONFIGURATION

The reference HLLV configuration is shown in the launch configuration. As illustrated, both stages have common body diameter, wing and vertical stabilizer; however, the overall length of the second stage (orbiter) is approximately 5 meters greater than the first stage (booster).

The HLLV performance has been determined by using a modified STS scaling and trajectory program. The vehicle can deliver a payload of approximately 231,000 kg to an orbital altitude of 487 km at an inclination of 31.6°.

The vehicle relative staging velocity is 2127 m/sec (6978 ft/sec) at an altitude of 55.15 km (181,000 ft) and a first stage burnout range of 88.7 km (48.5 nmi). The first stage flyback range is 387 km (211.8 nmi). For the reference HLLV configuration, all engine throttling to limit maximum dynamic pressure during the parallel burn mode is accomplished with the first or booster stage engines only (i.e., second stage engines operate at 100% rated thrust).

REFERENCE HLLV LAUNCH CONFIGURATION

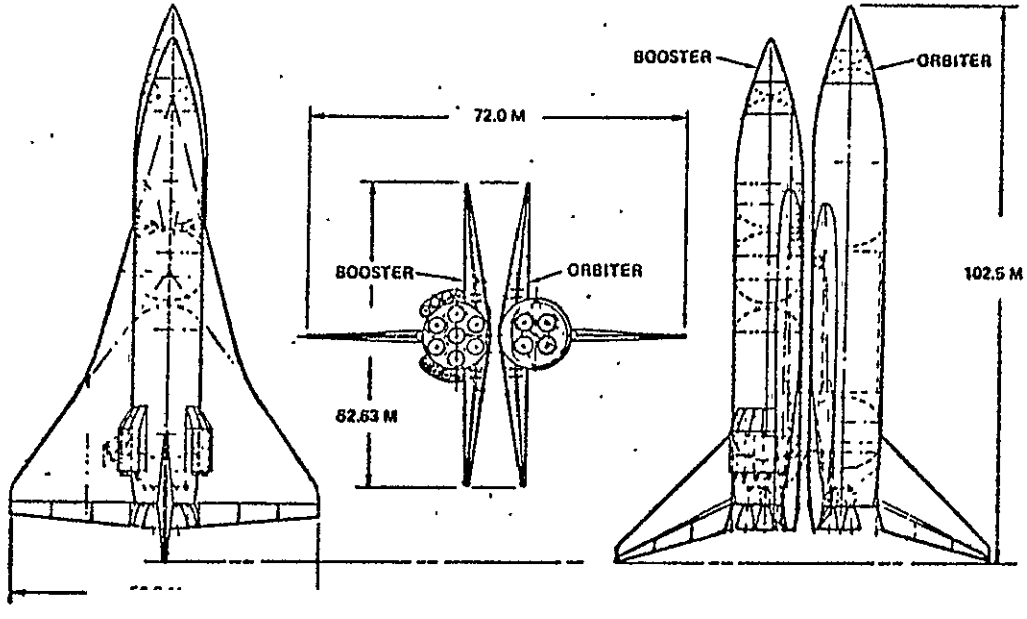

HLLV MASS PROPERTIES × 10^{-6}

	KG	LB
GLOW	7.14	15.73
BLOW	4.92	10.84
W_{P1}	4.49	9.89
ULOW	2.22	4.89
W_{P2}	1.66	3.65
PAYLOAD	0.23	0.51

HLLV FIRST STAGE (BOOSTER) - LANDING CONFIGURATION

The HLLV booster is shown in the landing configuration. The vehicle is approximately 300 feet in length with a wing span of 184 feet and a maximum clearance height of 116 ft. The nominal body diameter is 40 feet. The vehicle has a dry weight of 1,045,500 lb. Seven high P_c gas generator driven LOX/RP engines are mounted in the aft fuselage with a nominal sea level thrust of 2.3 million pounds each. Eight turbojet engines are mounted on the upper portion of the aft fuselage with a nominal thrust of 20,000 lb each.

During the booster ascent phase, the second stage LOX/LH_2 propellants are crossfed from the booster to achieve the parallel burn mode. Approximately 1.6 million pounds of propellant are crossfed from the booster to the orbiter during ascent.

HLLV FIRST STAGE (BOOSTER) - LANDING CONFIGURATION

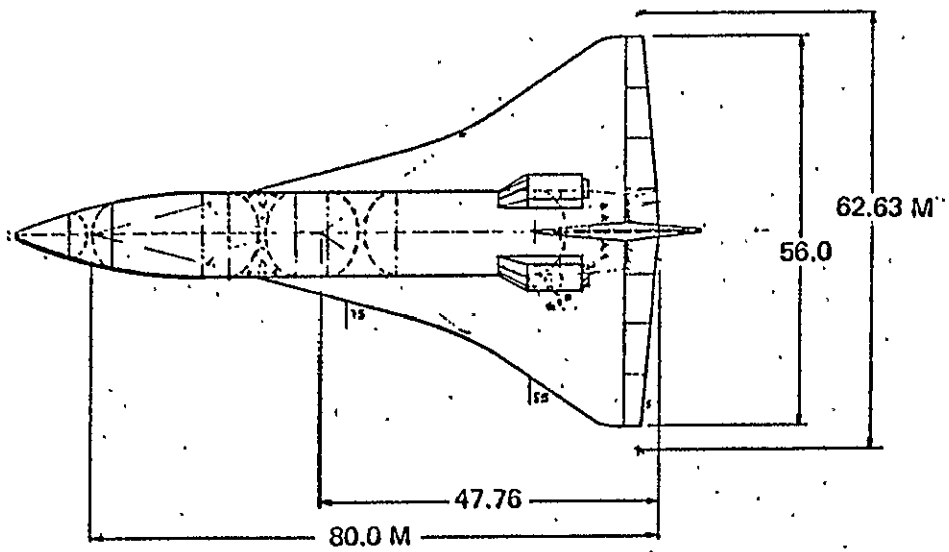

- CROSS FEED, DUAL DELTA DRY WING, L/D = 7.5

ORIGINAL PAGE IS OF POOR QUALITY

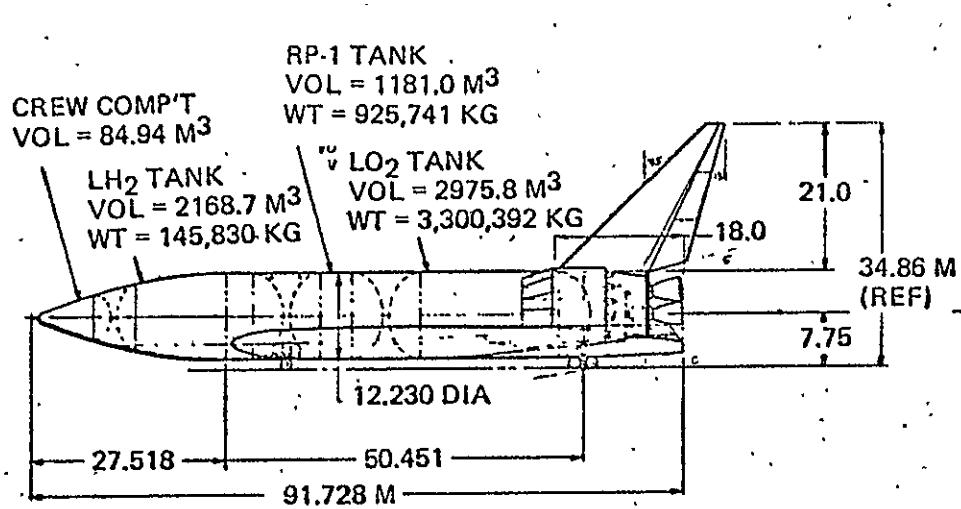

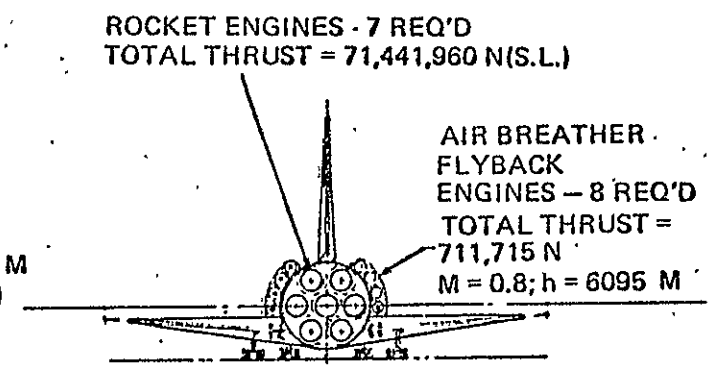

HLLV SECOND STAGE (ORBITER) - LANDING CONFIGURATION

The HLLV orbiter is depicted in the landing configuration. The vehicle is approximately 317 feet in length with the same wing span, vertical height, and nominal body diameter as the booster. The orbiter employs four high P_c staged combustion LOX/LH_2 rocket engines with a nominal sea level thrust of 1.19 million lb each.

The cargo bay is located in the mid-fuselage in a manner similar to the STS orbiter and has a length of approximately 90 feet.

HLLV SECOND STAGE (ORBITER) - LANDING CONFIGURATION

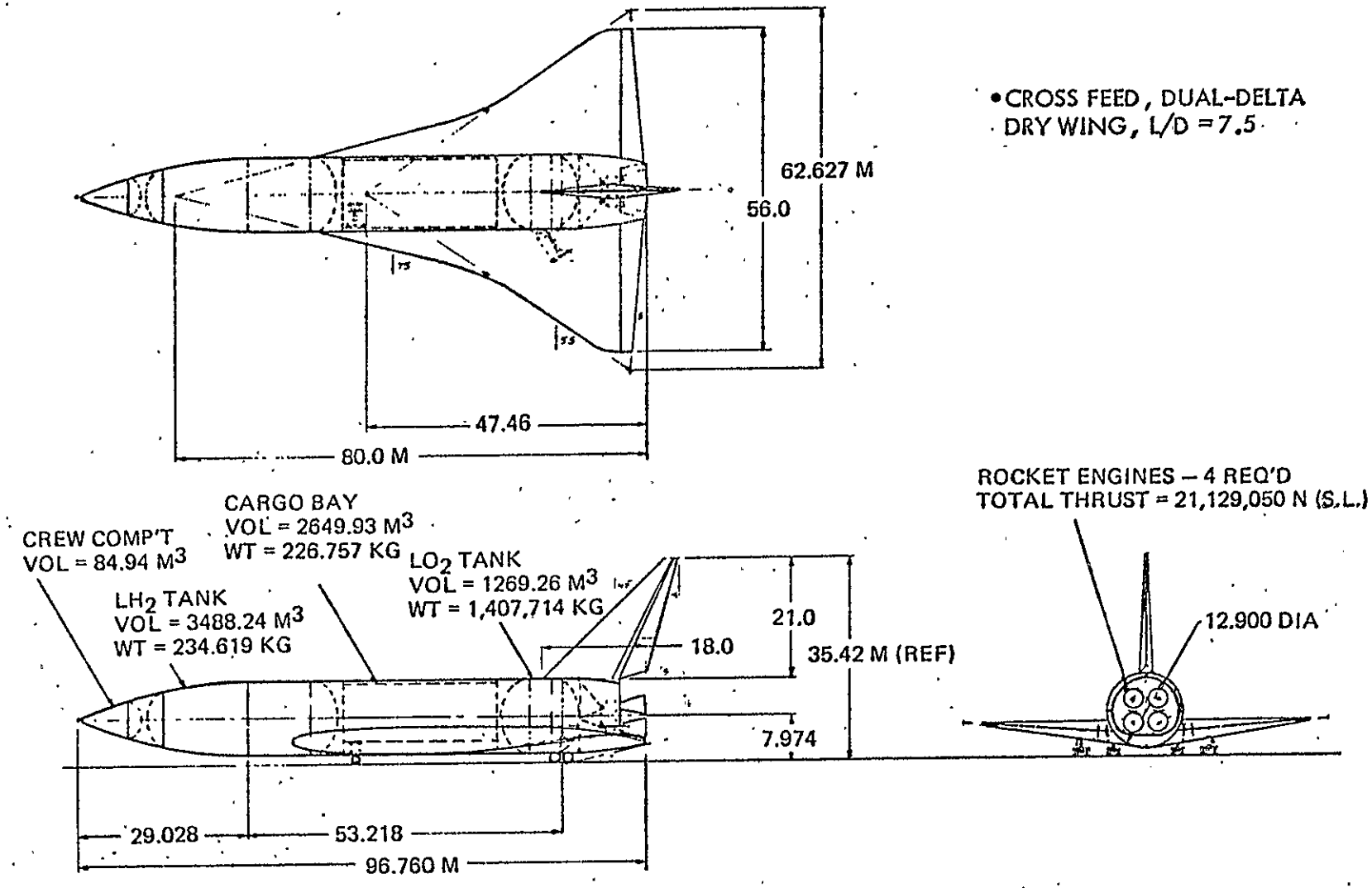

HLLV WEIGHT STATEMENT

This chart is self-explanatory.

HLLV WEIGHT STATEMENT kg x 10^{-3} (lb x 10^{-3})

SUBSYSTEM	2ND STAGE	1ST STAGE
FUSELAGE	103.41 (227.98)	130.73 (288.22)
WING	39.20 (86.41)	78.17 (172.34)
VERTICAL TAIL	5.70 (12.57)	7.21 (15.89)
CANARD	1.39 (3.07)	2.21 (4.87)
TPS	52.59 (115.94)	-
CREW COMPARTMENT	12.70 (28.00)	**
AVIONICS	3.86 (8.50)	3.40 (7.50)
PERSONNEL	1.36 (3.00)	**
ENVIRONMENTAL	2.59 (5.70)	**
PRIME POWER	5.44 (12.00)	**
HYDRAULIC SYSTEM	3.86 (8.50)	**
ASCENT ENGINES	26.93 (59.38)	67.45 (148.70)
RCS SYSTEM	9.59 (21.15)	**
LANDING GEARS	18.38 (40.51)	**
PROPULSION SYSTEMS	*	44.99 (99.18)
ATTACH AND SEPARATION	-	4.59 (10.12)
APU	-	0.91 (2.00)
FLYBACK ENGINES	-	28.55 (62.95)
FLYBACK PROPULSION SYSTEM	-	18.39 (40.54)
SUBSYSTEMS	-	25.76 (56.80)
DRY WEIGHT	286.99 (632.71)	(909.12)
GROWTH MARGIN (15%)	43.05 (94.91)	(136.37)
TOTAL INERT WT.	330.04 (727.62)	(1045.49)

*INCLUDED IN FUSELAGE WEIGHT
**ITEMS INCLUDED IN SUBSYSTEMS

ORIGINAL PAGE IS OF POOR QUALITY

HLLV PROPELLANT WEIGHT SUMMARY

This chart is self-explanatory.

HLLV PROPELLANT WEIGHT SUMMARY x 10^{-6}

	FIRST STAGE		SECOND STAGE	
	LB	KG	LB	KG
USABLE	9.607	4.358	3.481	1.579
CROSSFEED	1.612	0.732	(1.612)	(0.731)
TOTAL BURNED	7.995	3.626	5.093	2.310
RESIDUALS	0.040	0.018	0.020	0.009
RESERVES	0.045	0.020	0.024	0.011
RCS	0.010	0.005	0.018	0.008
ON-ORBIT	-	-	0.095	0.043
BOIL-OFF	-	-	0.010	0.005
FLY-BACK	0.187	0.085	-	-
TOTAL LOADED	9.889	4.486	3.648	1.655

ORIGINAL PAGE IS
OF POOR QUALITY

ENGINE PERFORMANCE PARAMETERS

Engine performance parameters used in overall HLLV synthesis are presented.

ENGINE PERFORMANCE PARAMETERS

ENGINE	SPECIFIC IMPULSE (SEC)		MIXTURE RATIO	THRUST/WEIGHT
	SEA LEVEL	VACUUM		
LOX/RP GG CYCLE	329.7	352.3	2.8:1	120
LOX/CH_4 GG CYCLE	336.9	361.3	3.5:1	120
LOX/LH_2 STAGED COMB.	337.0	466.7	6.0:1	80

ENGINE THROTTLE TRADE SUMMARY

The results of variations in throttling percentage between first and second stage engines to stay within the maximum load factor and dynamic pressure constraints, 3 g and 650 PSF respectively are presented. The propellant weight consumed by the first and second stage during ascent was held constant and the amount of crossfeed propellant from the first to second stage was allowed to vary accordingly (i.e., the second stage propellant loaded weight was allowed to vary). An assessment was made as to the effects on payload, staging velocity and gross liftoff weight (GLOW).

As may be seen, a 2.5% decrease in payload is realized when the throttle level of the first stage is reduced from 100% to 50% with a similar decrease in staging velocity. However, when throttling 100% with the second stage, essentially the same payload capability as afforded by the reference configuration was achieved at a significantly lower staging velocity (Case 66).

ENGINE THROTTLE TRADE SUMMARY

CASE	1ST STAGE THROTTLE %	STAGING VELOCITY (FT/SEC)	PAYLOAD (LB x 10^3)	2ND STAGE PROP. LOADED LB x 10^6	GLOW LB x 10^6	GLOW/PAYLOAD
REFERENCE	100	6978	509.7	3.481	15.73	30.87
85	86	6893	505.9	3.509	15.73	31.10
65	68	6887	499.6	3.543	15.72	31.46
45	50	6808	499.5	3.574	15.72	31.73
66	0	6646	508.4	3.631	15.73	30.92

FIRST STAGE PROPELLANT TRADE SUMMARY

An analysis of the effects of varying first stage propellant loading was performed. As expected, the payload capability increases as the first stage propellant mass is increased. The ratio of glow/payload weights is also improved. However, the staging velocity also increases significantly. In this trade study the first stage inert weight was not penalized for the additional TPS required at the higher staging velocities. By including that delta weight the glow/payload ratio would not be as favorable. By combining the results of this study with the throttling trade results, however, a payload increase may be achieved without the significant increase in staging velocity.

FIRST STAGE PROPELLANT TRADE SUMMARY

CASE	1ST STAGE PROP. WEIGHT (LB x 10^6)	GLOW (LB x 10^6)	PAYLOAD (LB x 10^3)	STAGING VELOCITY (FT/SEC)	GLOW/PAYLOAD
REFERENCE	7.995	15.731	509.7	6978	30.87
21	8.495	16.328	551.6	7281	29.60
22	8.995	16.921	589.0	7573	28.73
23	9.495	17.514	624.9	7852	28.03
24	9.995	18.108	659.3	8114	27.46

ORIGINAL PAGE IS OF POOR QUALITY

SECOND STAGE PROPELLANT WEIGHT SUMMARY

The second stage propellant weights were varied in a similar manner as the first stage. The results of this analysis, as might be expected, are just the opposite of those presented for the first stage weight variation. As second stage propellant weight is increased the payload weight increases but the staging velocity decreases and the glow/payload weight ratio becomes worse. Also, when the throttling function is shifted to the second stage, the penalties become worse rather than showing an improvement as in the case of first stage propellant weight increases.

SECOND STAGE PROPELLANT WEIGHT STUDY SUMMARY

CASE	SECOND STAGE PROP. WEIGHT (LB x 10^6)	STAGING VELOCITY (FT/SEC)	PAYLOAD (LB x 10^3)	GLOW (LB x 10^6)	GLOW/PAYLOAD
REFERENCE	5.093	6978	509.7	15.731	30.87
30	5.570	6608	519.6	16.310	31.39
31	6.068	6238	521.1	16.918	32.46
32	6.565	5851	515.2	17.540	34.05

ALTERNATE PROPELLANT CONCEPTS

A performance comparison was made of the reference configuration using LOX/RP with alternate propellant systems of LOX/CH_4 (Methane) and LOX/LH_2. Selected vehicle parameters are compared. Although the LOX/LH_2 configuration affords significant gains in payload capability, the considerably higher cost of LOX/LH_2 and the larger vehicle volume requirements result in a less cost effective configuration than the baseline. The increase in performance (~6%) afforded by the methane system is significant and contingent upon cost/availability in the quantities required for SPS, is the preferred propellant system.

ALTERNATE PROPELLANT CONCEPTS

VEHICLE WEIGHT (KG x 10^6)	FIRST STAGE PROPELLANT		
	LOX/RP	LOX/CH_4	LOX/LH_2
GLOW	7.135	7.151	7.532
BLOW	4.831	4.849	5.109
W_{P1}	4.359	4.372	4.385
ULOW	2.177	2.196	2.260
W_{P2}	1.579	1.564	1.552
PAYLOAD	0.231	0.245	0.318
GLOW/PAYLOAD	30.87	29.18	23.70

COMPARISON OF LIFTOFF THRUST-TO-WEIGHT

The liftoff thrust-to-weight (T/W) was reduced from the reference value of 1.30 to 1.25 in order to assess the effects. This variation in T/W resulted in approximately 1% reduction in payload capability without an appreciable change in staging velocity. The glow was also reduced slightly. The major effect was a shift of approximately 70,000 lb of second stage stored propellant over to the first stage crossfeed tanks. This shift in propellant weight should bring both vehicles within the same volumetric envelope. Selected vehicle parameters are compared with the reference HLLV configuration.

COMPARISON OF LIFTOFF T/W OF 1.25 WITH REFERENCE HLLV

	THRUST/WEIGHT 1.3 (REF)	1.25
GLOW (LB x 10^6)	15.731	15.697
PAYLOAD (LB x 10^3)	509.7	503.9
GLOW/PAYLOAD	30.87	31.15
STAGING VELOCITY (FT/SEC)	6978	7000
FIRST STAGE PROPELLANT - LOADED (LB x 10^6)	3.481	9.679
SECOND STAGE PROPELLANT - LOADED (LB x 10^6)	9.607	3.410

PERSONNEL LAUNCH VEHICLE (PLV)

The PLV is a derivative or growth version of the currently defined Space Shuttle Transportation System (STS). The configuration selected as a baseline for SPS studies is representative of various growth options evaluated in Rockwell-funded studies and NASA contracts, NAS8-32015 and NAS8-32395. The growth version or PLV is achieved by replacing the existing solid rocket boosters (SRB) with a pair of liquid rocket boosters (LRB). The existing orbiter and external tank are used in their current configuration. The added performance afforded by the LRB increases the orbiter payload capability to the reference STS orbit by approximately 54%, or a total payload capability of 45,350 kg (100,000 lb).

The LRB has a gross weight of 395,000 kg, made up of 324,000 kg of propellant (278,000 kg of LO and 46,000 kg of LH), and 71,000 kg of inert weight. The overall length of the LRB is 47.55 meters with a nominal diameter of 6.1 meters. Four Space Shuttle main engine (SSME) derivatives are employed with a gross thrust of 412.7 newtons (sea level), providing a liftoff thrust-to-weight ratio of 1.335.

PERSONNEL LAUNCH VEHICLE (PLV)

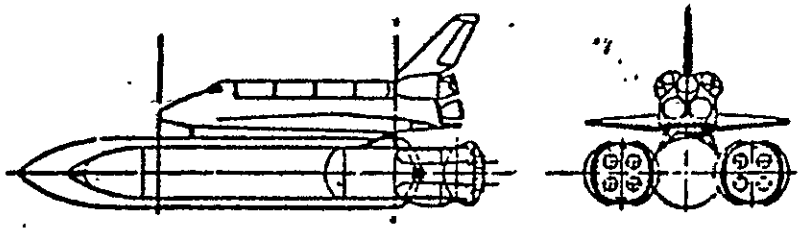

LAUNCH CONFIGURATION

PAYLOAD = 100K LB GLOW = 3.670M LB

BOOSTER (EACH):

GROSS WT = 871K LB
PROP. WT = 715K LB
INERT WT = 156K LB

SSME-35:

F = 459K LB (S.L.) (EACH)
I_{SP} = 406 SEC (S.L.)
ε = 35:1
MR = 6:1

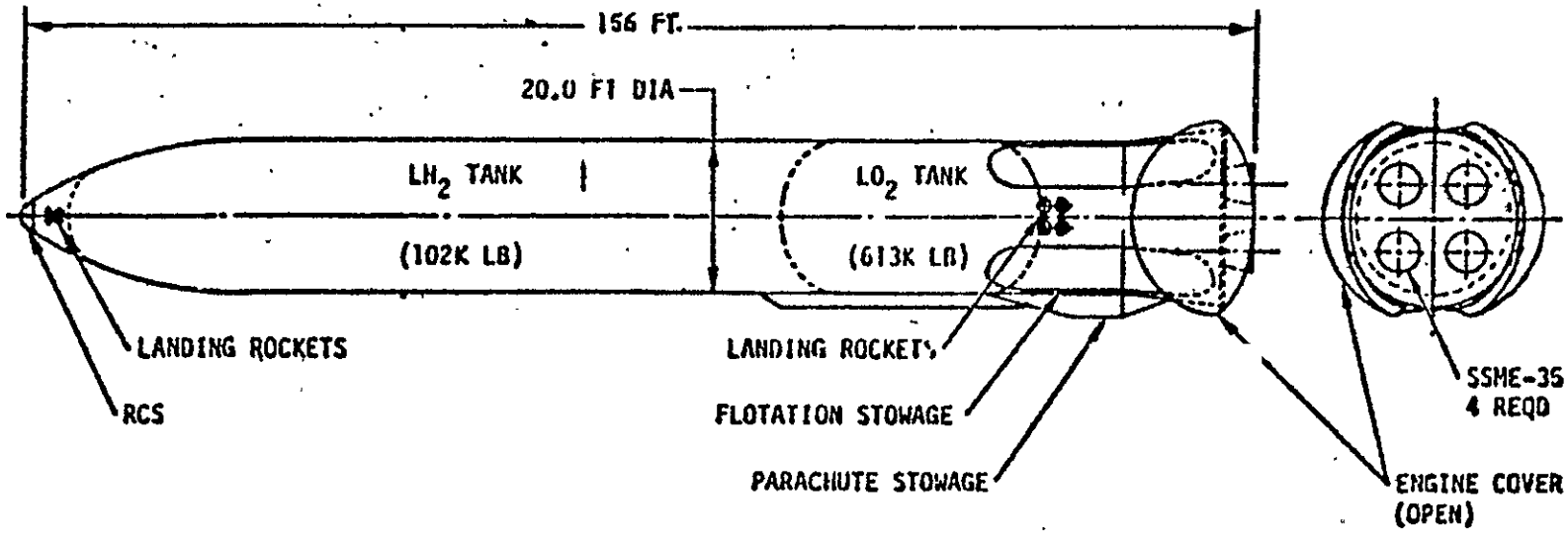

ORIGINAL PAGE IS
OF POOR QUALITY

STS HLLV CONFIGURATION

The STS-derived heavy lift launch vehicle (STS-HLLV), employed in the precursor phase of SPS, is derived by replacing the STS orbiter on the PLV with a payload module and a reusable propulsion and avionics module (PAM) to provide the required orbiter functions. The PAM may be recovered ballistically or, preferably, as a down payload for the PLV. These modifications yield an STS-HLLV with a payload capability of approximately 100,000 kg.

STS HLLV CONFIGURATION

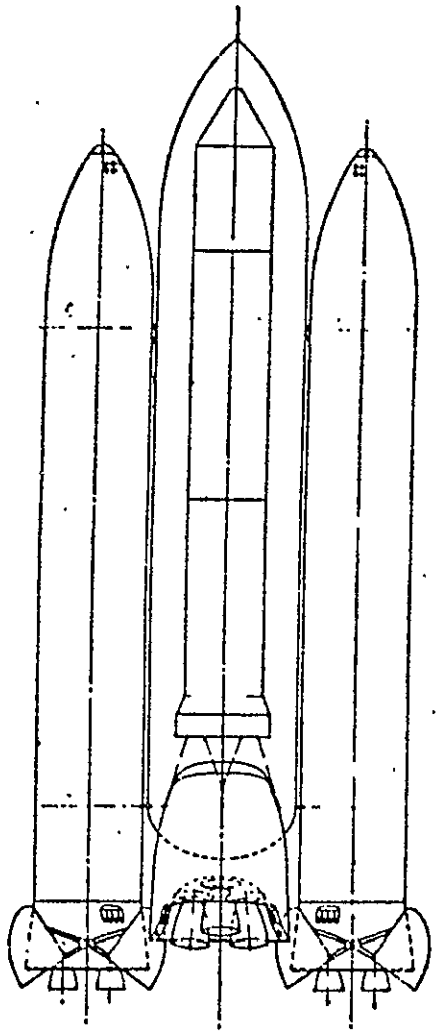

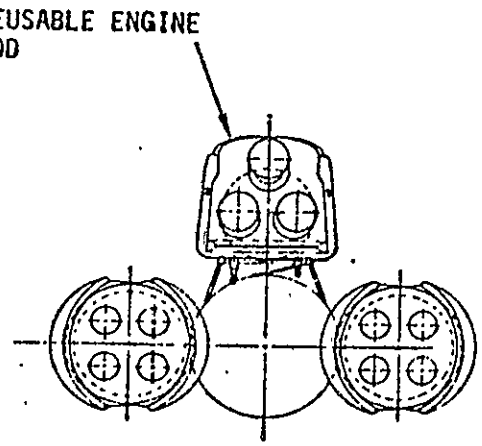

LIFTOFF WEIGHTS (10^3 kg)	
PAYLOAD	100.0
EXTENAL TANK	738.3
LRB (2)	790.0
REUSABLE POD	13.7
TOTAL	1642.0

ORIGINAL PAGE IS
OF POOR QUALITY

SELECTED EOTV CONFIGURATION

The electric OTV concept is based upon a rigid design which can accommodate two "standard" solar blanket areas of 600 meters by 750 meters from the MSFC/Rockwell baseline satellite concept. The commonality of the structural configuration and construction processes with the satellite design is noted. Since the thrust levels will be very low (as compared to chemical stages), the engines and power processing units are mounted in four arrays at the lower corners of the structure/solar array. Each array contains 36 thrusters, however, only sixty-four thrusters are capable of firing simultaneously. The additional thrusters provide redundancy when one or more arrays cannot be operated due to potential plume impingement on the solar array. Up to 16 thrusters, utilizing stored electrical power are used for attitude hold only during periods of occultation. The attitude determination system is the same as the SPS, mounted in 6 locations. Payload attach platforms are located so that loading/unloading operations can be conducted from "outside" the light weight structure.

SELECTED EOTV CONFIGURATION

EOTV DRY WT. - 1.1×10^6 KG
EOTV WET WT. - 1.76×10^6 KG
PAYLOAD WT. - 5.17×10^6 KG

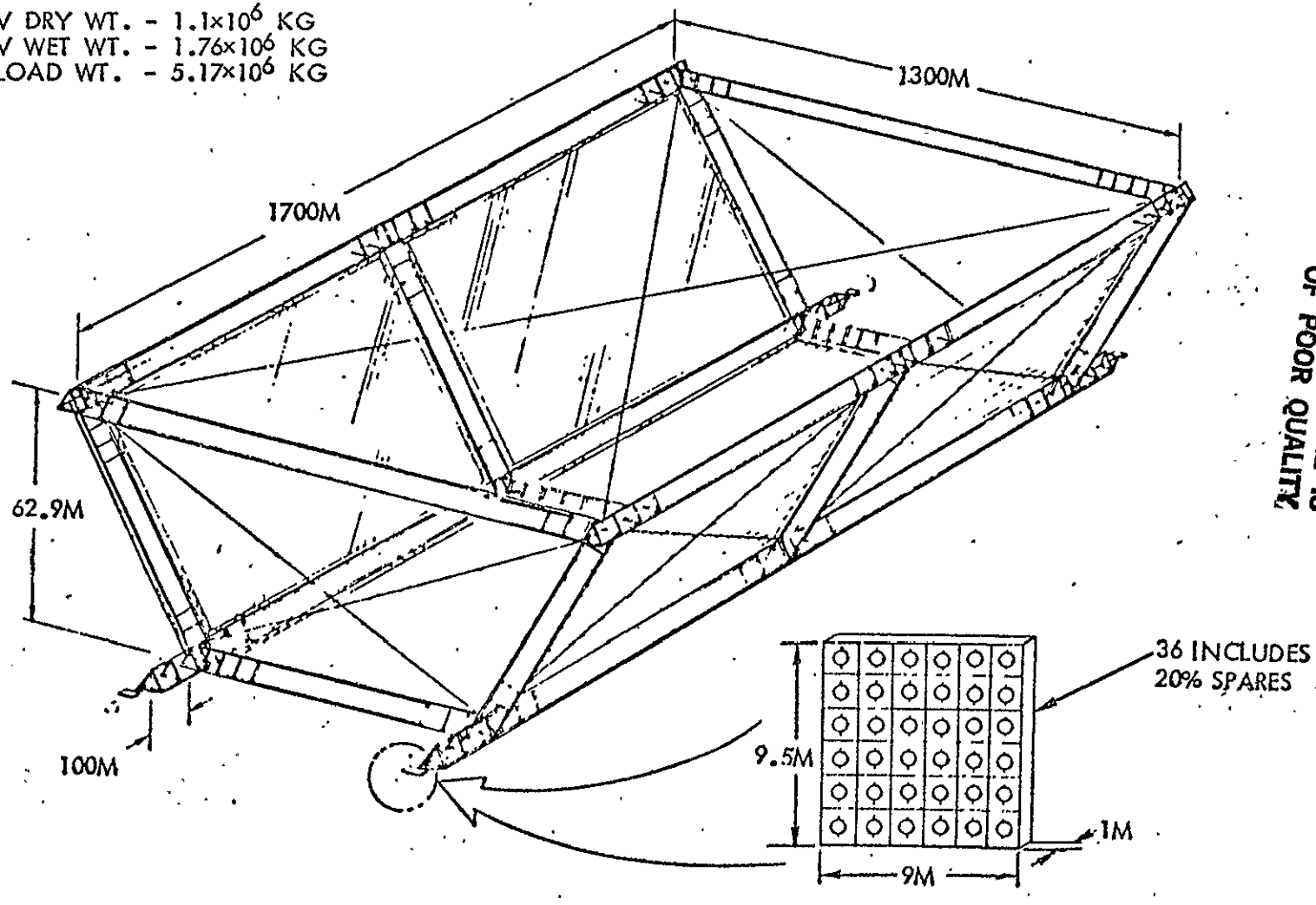

ORIGINAL PAGE IS
OF POOR QUALITY

EOTV WEIGHT/PERFORMANCE SUMMARY

The solar array weights are consistent with baseline SPS weights criteria. The thruster array weights are dictated by the size/performance of the individual thruster whose performance is fixed by available power and voltage/temperature limitations.

The major element of attitude control system weight, (the power supply) is based on the same sizing criteria as the SPS battery system.

The transfer propellant weight of 666,660 kg is the maximum that can be consumed by the thrusters during the assumed transit time of 120 days up (100 days thrusting) and the resultant return trip time of approximately 30 days (22 days thrusting).

The EOTV dry weight (including growth) is approximately 1.09×10^6 kg and has a payload delivery capability to GEO of 5.17×10^6 kg with a 10% return payload capability to LEO.

The estimated cost of $4.72/kg-payload reflects propellant costs only delivered to LEO.

EOTV WEIGHT/PERFORMANCE SUMMARY (kg)

SOLAR ARRAY		588,196
CELLS/STRUCTURE	299,756	
POWER CONDITIONING	288,440	
THRUSTER ARRAY (4)		96,685
THRUSTERS/STRUCTURE	10,979	
CONDUCTORS	4,607	
BEAMS/GIMBALS	2,256	
PROPELLANT TANKS	78,843	
ATTITUDE CONTROL SYSTEM		186,872
POWER SUPPLY	184,882	
SYSTEM COMPONENTS	274	
PROPELLANT TANKS	1,716	
EOTV INERT WEIGHT		871,753
25% GROWTH		217,938
TOTAL INERT WEIGHT		1,089,691
PROPELLANT WEIGHT		666,660
TRANSFER PROPELLANT	655,219	
ACS PROPELLANT	11,441	
EOTV LOADED WEIGHT		1,756,351
PAYLOAD WEIGHT		5,171,318
LEO DEPARTURE WEIGHT		6,927,669
PROPELLANT COST DELIVERED ($/KG P/L)		4.72

ORIGINAL PAGE IS OF POOR QUALITY

RECOMMENDED POTV CONFIGURATION

The recommended POTV configuration is shown in the mated configuration with the PM. Either element is capable of delivery from earth to LEO in the PLV; however, subsequent propellant requirements for the POTV will be delivered to LEO by the HLLV because of the lesser $/kg payload cost.

Individual propellant tanks are indicated for the LO_2 and LH_2 in this configuration because of uncertainties at this time in specific attitude control requirements. With further study, it may be advantageous to provide a common bulkhead tank as in the case of the Saturn-II, and locate the ACS at the mating station of the POTV and PM, or in the aft engine compartments - space permitting.

A construction sequence has been developed which requires a crew rotation every 90 days for crew complements in multiples of 60. The PM was synthesized on this basis. A limitation on PM size was established to assure compatibility with the PLV cargo bay dimensions and payload weight capacity (i.e., 4.5 m × 17 m and 45,000 kg).

The PM shown is based on parametric scaling data developed in previous studies. It is assumed that a command station is required to monitor and control POTV/PM functions during the flight. This function is provided in the forward section of the PM as shown. Spacing and layout of the PM is comparable to current commercial airline practice. Seating is provided on the basis of one meter, front to rear, and a width of 0.72 meter. PM mass was established on the basis of 110 kg/man (including personal effects) and approximately 190 kg/man for module mass. The PM design has provisions for 60 passengers and two flight crew members.

POTV CONFIGURATION

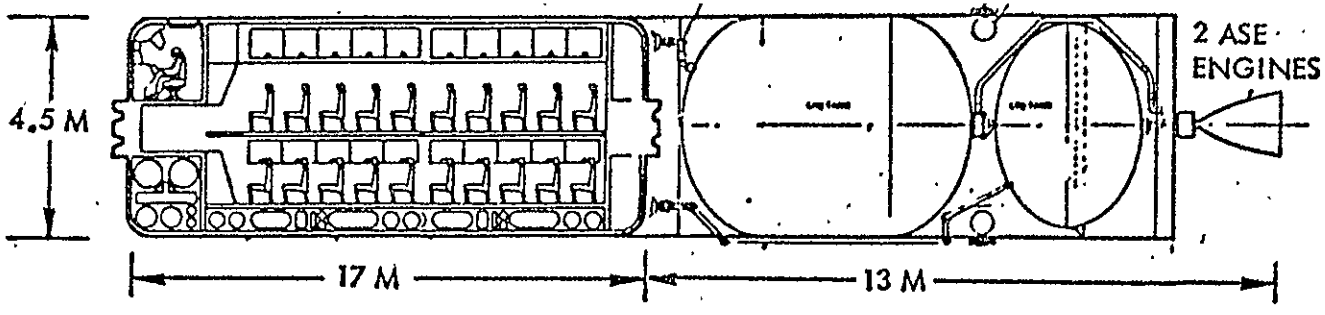

- 60 MAN CREW MODULE — 18,000 KG
- SINGLE STAGE OTV (GEO REFUELING) — 36,000 KG
- BOTH ELEMENTS CAPABLE OF GROWTH STS LAUNCH

ORIGINAL PAGE IS
OF POOR QUALITY

POTV WEIGHT SUMMARY

The recommended POTV configuration has a loaded weight of 36,000 kg and an inert weight of 3750 kg.

POTV WEIGHT SUMMARY

SUBSYSTEM	WEIGHT (kg)
TANK (5)	1,620
STRUCTURES AND LINES	702
DOCKING RING	100
ENGINE (2)	490
ATTITUDE CONTROL	235
OTHER	262
SUBTOTAL	3,409
GROWTH (10%)	341
TOTAL INERT	3,750
PROPELLANT	32,750
TOTAL LOADED	36,000

ORIGINAL PAGE IS
OF POOR QUALITY

ADVANCED SPACE ENGINE

The POTV utilizes two advanced space engines (ASE), which are similar in operation to the Space Shuttle main engine (SSME). The engine is of high performance with a staged combustion cycle capable of idle-mode operation. The engine employs autogenous pressurization and low inlet NPSH operation. A two-position nozzle is used to minimize packaging length requirements.

ADVANCED SPACE ENGINE

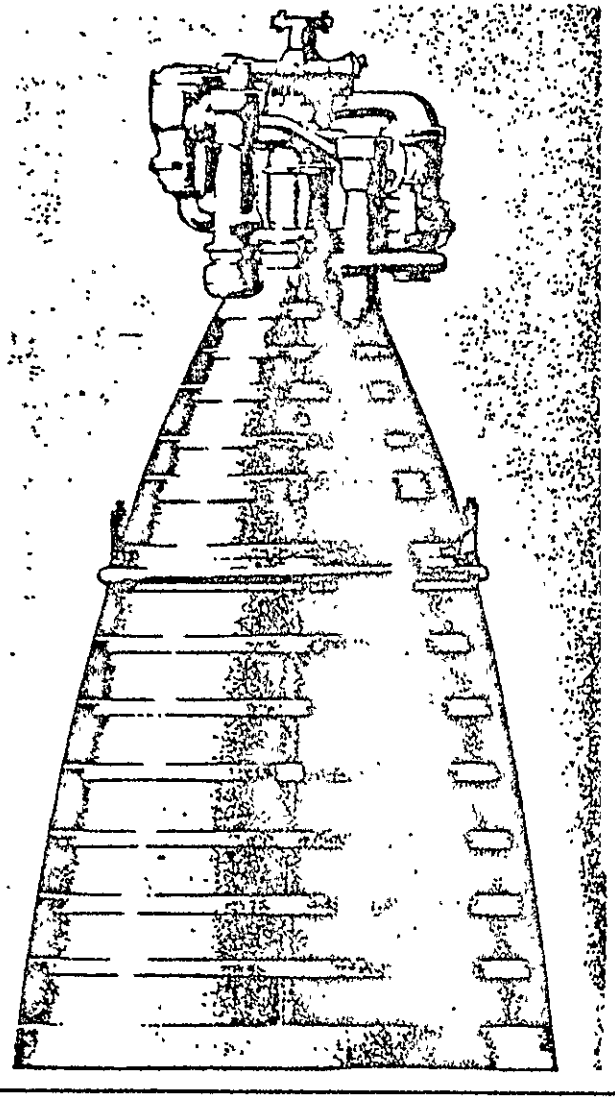

THRUST (LB)	20,000
CHAMBER PRESSURE (PSIA)	2,000
EXPANSION RATIO	400
MIXTURE RATIO	6.0
SPECIFIC IMPULSE (SEC)	473.0
DIAMETER (IN.)	48.5
LENGTH (IN.)	
NOZZLE RETRACTED	50.5
NOZZLE EXTENDED	94.0

ORIGINAL PAGE IS OF POOR QUALITY

CURRENT ASE ENGINE WEIGHT

This chart is self-explanatory.

CURRENT ASE ENGINE WEIGHT

FUEL BOOST AND MAIN PUMPS	74.5
OXIDIZER BOOST AND MAIN PUMPS	89.8
PREBURNER	12.4
DUCTING	25.0
COMBUSTION CHAMBER ASSEMBLY	62.8
REGEN. COOLED NOZZLE (ϵ = 175:1)	58.4
EXTENDABLE NOZZLE AND ACTUATORS (ϵ = 400:1)	122.0
IGNITION SYSTEM	6.1
CONTROLS, VALVES, AND ACTUATORS	74.0
HEAT EXCHANGER	14.0
TOTAL (LB)*	539.0

*BASED ON MAJOR COMPONENT CURRENT MEASURED WEIGHTS.

ORIGINAL PAGE IS
OF POOR QUALITY

ON-ORBIT MOBILITY SYSTEM (IOTV)

On-orbit mobility systems have been synthesized in terms of application and concept only. On-orbit elements considered here are powered by a chemical (LOX/LH_2) propulsion system. At least three distinct applications have been identified; (1) the need to transfer cargo from the HLLV to the EOTV in LEO and from the EOTV to the SPS construction base in GEO; (2) the need to move materials about the SPS construction base; and (3) the probable need to move men or materials between operational SPS's.

Sizing of the IOTV was based on a minimum safe separation distance between EOTV and the SPS base of 10 km. It was also assumed that a reasonable transfer time would be in the order of two hours (round trip), which equates to a ΔV requirement on the order of 3 to 5 m/sec. A single advanced space engine (ASE) is employed with a specific impulse of 473 sec.

IOTV WEIGHT SUMMARY

SUBSYSTEM	WEIGHT (kg)
ENGINE (1 ASE)	245
PROPELLANT TANKS	15
STRUCTURE AND LINES	15
DOCKING RING	100
ATTITUDE CONTROL	50
OTHER	100
SUBTOTAL	525
GROWTH (10%)	53
TOTAL INERT	578
PROPELLANT	300
TOTAL LOADED	878

ORIGINAL PAGE IS
OF POOR QUALITY

TRANSPORTATION REQUIREMENTS

The following three charts summarize the mass to orbit and vehicle flight and fleet requirements for the theoretical first unit (TFU) satellite, the total 60 year program, and shuttle growth vehicle requirements for the program.

The TFU requirements include those flight requirements for construction of the LEO base, SCB construction, and fabrication of the precursor satellite (EOTV test vehicle). The TFU fleet requirements include these requirements as well as those required to construct the first SPS.

The Total Program Requirements are given for "satellite construction" and "maintenance and operations". Except for personnel transfer flights, the mass-to-orbit and flight requirements for construction and operations and maintenance are "roughly equivalent". The vehicle fleet requirements are based upon the expected life of each vehicle type and does not include attrition or equivalent vehicle requirements to maintain an operational status.

The shuttle growth vehicle requirements are presented to better depict the impact on prior program estimates which were based on the HTO-SSTO concept.

TFU TRANSPORTATION REQUIREMENTS

	MASS x 10^6 KG		VEHICLE FLIGHTS					
	LEO	GEO	PLV	HLLV	POTV	EOTV	IOTV LEO	IOTV GEO
SATELLITE CONST. MAINT. & PACKAGING	37.12	37.12	45	163.5	45	6.5	164	164
CREW CONSUMABLES & PKG.	0.98	0.94	-	4.3	-	0.2	4	4
POTV PROPELLANTS & PKG.	2.91	1.46	-	12.8	-	0.3	13	6
EOTV CONST., MAINT. & PKG.	7.20	-	15	31.7	-	-	32	-
EOTV PROPELLANTS & PKG.	4.79	-	-	21.1	-	-	21	-
IOTV PROPELLANTS & PKG.	0.13	0.06	-	0.6	-	-	1	-
							235	174
TOTAL	53.13	39.58	60	234.0	45	7.0	409	
			VEHICLE REQUIREMENTS					
TFU FLEET			2	5	4	6	4	
GROWTH SHUTTLE VEHICLES— PRECURSOR REQUIREMENTS: • LEO BASE • SPACE CONSTR. BASE • EOTV TEST VEHICLE			PERSONNEL (PLV) 72 FLIGHTS 1 VEHICLE			CARGO CARRIER/ENGINE MODULE AND LAUNCH VEH. 129 FLIGHTS 2 VEHICLES		

ORIGINAL PAGE IS OF POOR QUALITY

TOTAL PROGRAM TRANSPORTATION REQUIREMENTS

	MASS x 10^6 KG		VEHICLE FLIGHTS					
	LEO	GEO	PLV	HLLV	POTV	EOTV	IOTV LEO	IOTV GEO
SATELLITE								
CONSTRUCTION	2197.8	2197.8	1340	9682	1220	425.1	9682	9682
OPERATIONS & MAINTENANCE	1803.0	1803.0	3694	7943	3660	348.7	7943	7943
CREW CONSUMABLES								
CONSTRUCTION	31.5	28.7	-	139	-	5.6	139	126
OPERATIONS & MAINTENANCE	86.8	86.0	-	382	-	16.6	382	379
POTV PROPELLANTS								
CONSTRUCTION	82.7	41.4	-	364	-	8.0	364	182
OPERATIONS & MAINTENANCE	267.8	133.8	-	1180	-	25.9	1180	589
EOTV CONSTRUCTION								
CONSTRUCTION	28.2	24.2	-	124	-	4.7	124	107
OPERATIONS & MAINTENANCE	22.2	19.0	-	98	-	3.7	98	84
EOTV PROPELLANTS								
CONSTRUCTION	340.3	2.0	-	1499	-	0.4	1499	9
OPERATIONS & MAINTENANCE	304.0	-	-	1339	-	-	1339	-
IOTV PROPELLANTS								
CONSTRUCTION	7.2	3.3	-	32	-	0.6	32	15
OPERATIONS & MAINTENANCE	6.6	3.0	-	29	-	0.6	29	13
SUMMARY								
CONSTRUCTION	2687.7	2297.4	1340	11,840	1220	444	11,840	10,121
OPERATIONS & MAINTENANCE	2490.4	2044.8	3694	10,971	3660	396	10,971	9,008
TOTAL	5178.1	4342.2	5034	22,811	4880	840	22,811	19,129
VEHICLE FLEET								
CONSTRUCTION	-	-	14	39	12	22	110	
OPERATIONS & MAINTENANCE	-	-	37	37	37	20	100	
TOTAL	-	-	51	76	49	42	210	

ORIGINAL PAGE IS OF POOR QUALITY

PRECEDING PAGE BLANK NOT FILMED

SHUTTLE GROWTH VEHICLE AND FLIGHT REQUIREMENTS

VEHICLE/ITEM DESCRIPTION	PRECURSOR PROGRAM	TFU	SATELLITE CONSTRUCTION	SATELLITE O&M	VEHICLE ATTRITION/RCI	TOTAL REQUIREMENTS*	PLV VEHICLE	CARGO VEHICLE
VEHICLE REQUIREMENTS								
SHUTTLE ORBITER (STANDARD VERSION)	(1)	(3)	15	37	26	78	1 EA	
SHUTTLE CARGO CARRIER & MODULE	2				1	3		1 EA
EXTERNAL TANK	(201)	(60)	1541	3694		5235	1 EA	1 EA
LIQUID ROCKET BOOSTER	(6)	(10)	34	74	216	324	2 EA	2 EA
FLIGHT REQUIREMENTS								
PERSONNEL LAUNCH VEHICLE (PLV)	(72)	(60)	1412	3694		5106		
CARGO CARRIER LAUNCH VEH. MODULE	129					129		

* Precursor & TFU requirements included in satellite construction quantity.

EXECUTIVE SUMMARY

G. M. HANLEY

DESIGN DEFINITION

- REFERENCE CONCEPT - A. A. NUSSBERGER
- SOLID-STATE CONCEPTS - W. V. McRAE
- MICROWAVE TRANSMISSION SYSTEM - C. Y. TOMITA
- LASER ENVIRONMENTAL STUDY - G. M. HANLEY

CONSTRUCTION & OPERATIONS

- R. F. WADSWORTH

TRANSPORTATION SYSTEM DEFIN.

- R. P. BERGERON

PROGRAM AND COST DATA

- F. W. VON FLUE

PRECEDING PAGE BLANK NOT FILMED

COST AND PROGRAMMATICS

This outline identifies the areas of cost, schedules, and program plans to be covered.

COST AND PROGRAMMATICS

- OVERALL APPROACH
- COST SUMS AND ANALYSIS
- SCHEDULES AND NETWORKS
- RESOURCE ANALYSIS
- INDUSTRY CONTACTS AND LITERATURE SOURCES
- CONCLUSIONS/RECOMMENDATIONS

COST AND PROGRAMMATIC GUIDELINES

The Exhibit C study considers an SPS option of 60 units with an IOC in the year 2000 and the full 300 GW capability will increase at the rate of 2 SPS or 10 GW's per year. Costs were determined for the average satellite system and for the placement of the first SPS. All costs are in 1977 dollars and standard percentage factors were used for management/integration and to provide a mass contingency.

COST AND PROGRAMMATIC GUIDELINES

- SPS IOC IS 2000 FOR 60 UNIT OPTION
- 10 GW ANNUAL BUILD RATE FOR 300 GW CAPABILITY
- 1981 - 1987 KEY TECHNOLOGY PERIOD
- 1990 SPS COMMERCIALIZATION (PHASE C/D)
- REPORT COST TO PLACE FIRST SPS
- COST ESTIMATES IN 1977 DOLLARS
- MANAGEMENT AND INTEGRATION COSTED AT 5%
- 25% MASS CONTINGENCY COSTED AS 15% BOTTOM LINE COST

ORIGINAL PAGE IS
OF POOR QUALITY

ROCKWELL COST MODEL

This chart is self-explanatory.

ROCKWELL COST MODEL

- STRUCTURED TO REFERENCED SYSTEM WBS
- UTILIZES MSFC CER DATA BASE
- INCORPORATES "GRASS ROOTS" ANALYSIS AND ROCKWELL DATA BASE
- COSTS DDT&E, TFU, ICI, RCI, AND O&M
- ACCOUNTS FOR COMPLEXITY, LEARNING, DEVELOPMENT, AND DEGREE OF AUTOMATION
- COMPUTER PROGRAM INTEGRATES COST, SCHEDULE, RISK

ORIGINAL PAGE IS
OF POOR QUALITY

SPS COST RELATIONSHIPS

Rockwell SPS reference configuration costs are identified for DDT&E, TFU, average satellite investment, and the replacement/O&M phases of the program. All costs consider a 60 unit SPS option over 30 years and the chart shows major elements of cost within each of the foregoing phases. Space transportation dominates the DDT&E and TFU activities. A single satellite of an average 60 unit SPS option costs $5.33 B, or 37% of the total $14.4 B cost. Replacement capital investment and O&M costs for the satellite are $.2 B of the $.66 B per SPS/yr.

SPS COST RELATIONSHIPS

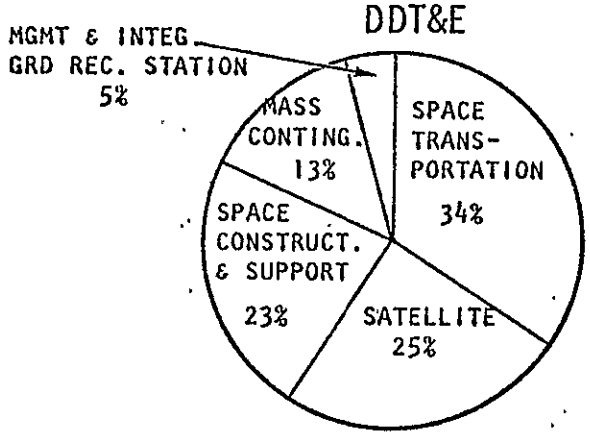

$31.6B

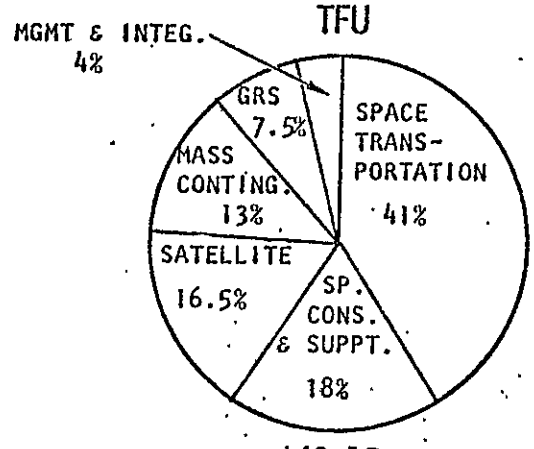

$48.1B

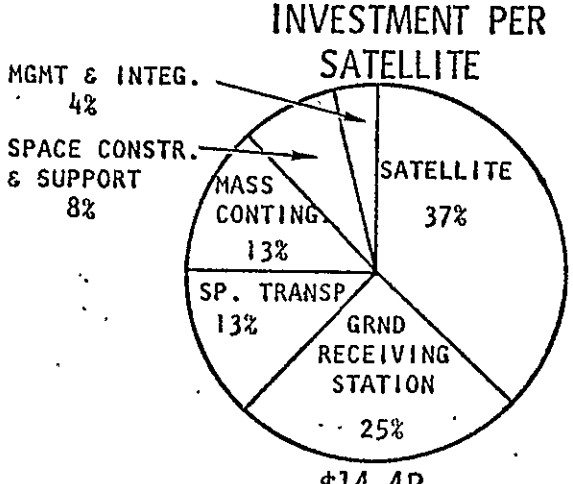

$14.4B

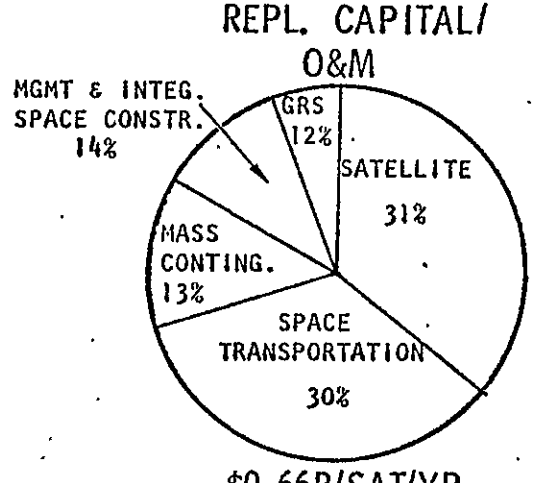

$0.66B/SAT/YR

COST RELATIONSHIP THROUGH THE FIRST SPS

DDT&E and TFU costs are combined on this chart to show projected allocations of the $79.7 B total. Cost estimates of space transportation, space construction, the satellite, and the ground receiving station include precursor/technology programs and the costs for program elements with a lifetime capability of building more than one SPS. This includes the items of space transportation, the SCB, and the LEO base. The SPS VTO/HL HLLV is a major cost contributor to space transportation along with the rectenna support structure/power collection elements of the GRS.

COST RELATIONSHIP THROUGH THE FIRST SPS

INCLUDES:
- TECHNOLOGY DEV.
- DDT&E
- TEST & EVALUATION
- FABRICATION
- ASSEMBLY
- OPERATIONAL ACCEPTANCE

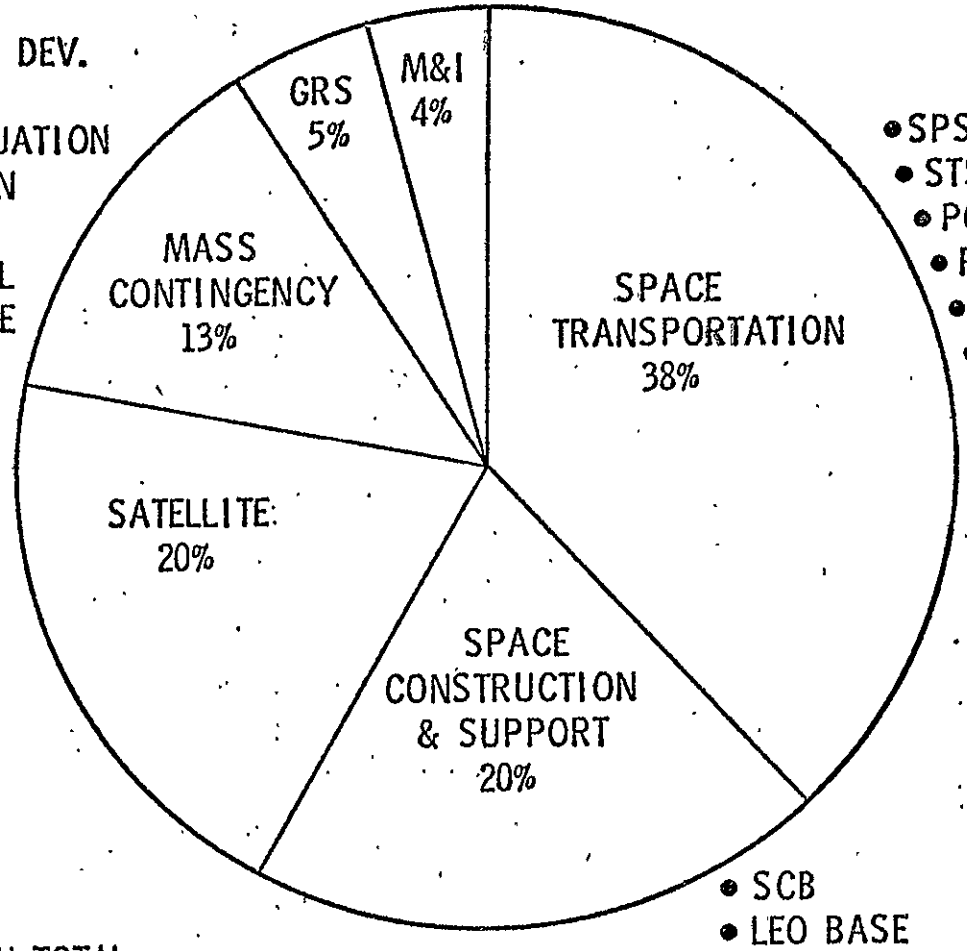

- SPS-VTO/HL HLLV
- STS-PLV
- POTV
- PM
- IOTV
- EOTV

- SCB
- LEO BASE
- O&M BASE

$79.7 BILLION TOTAL

ORIGINAL PAGE IS OF POOR QUALITY

SPS TIME PHASED COSTS

This chart displays annual funding requirements and peak year distributions of cost for the DDT&E and TFU. DDT&E costs peak at $3.87 B in 1991. This time period corresponds to the activation of heavy activity on the satellite, space construction and transportation vehicles. The TFU costs peak at $9.20 B in 1996 which is the period of system/hardware production and the beginning of space operations. Both phases accumulate to a gentle peak between the years 1995, 6, and 7.

TIME PHASED DDT&E AND TFU COSTS

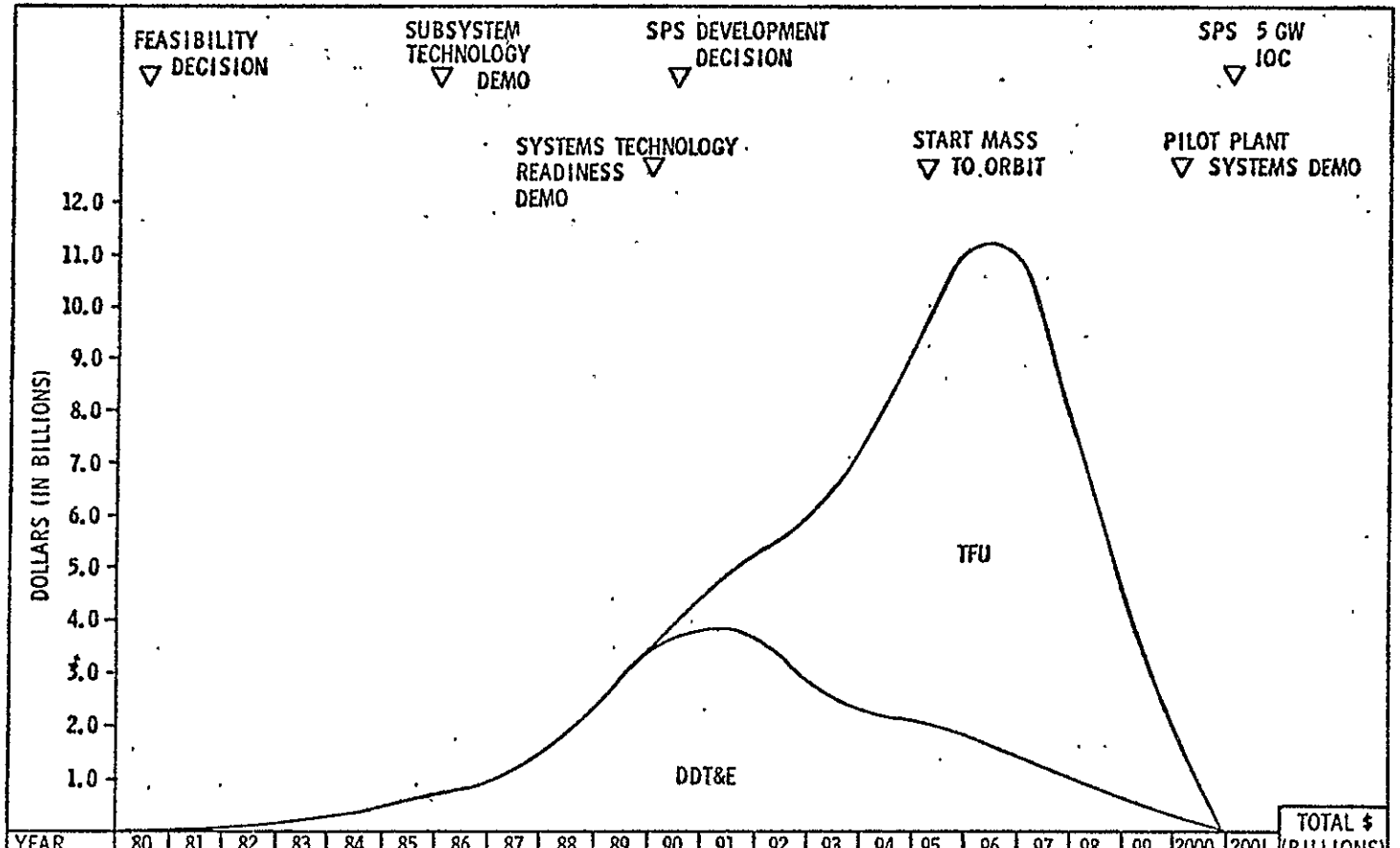

YEAR	80	81	82	83	84	85	86	87	88	89	90	91	92	93	94	95	96	97	98	99	2000	2001	TOTAL $ (BILLIONS)
DDT&E	.009	.063	.163	.301	.472	.666	.881	1.235	2.040	2.971	3.662	3.871	3.480	2.702	2.192	2.060	1.759	1.307	.886	.601	.230	0	31.551
TFU	0	0	0	0	0	0	0	0	0	.184	.535	1.139	2.101	3.524	5.691	8.016	9.197	8.471	5.999	2.768	.486	0	48.111
TOTAL	.009	.063	.163	.301	.472	.666	.881	1.235	2.040	3.155	4.197	5.010	5.581	6.226	7.883	10.076	10.956	9.778	6.885	3.369	.716	0	79.662

ORIGINAL PAGE IS OF POOR QUALITY

SPS MASTER PROGRAM SCHEDULE

This summary schedule identifies ground based exploratory research activities and key technology programs preceding the 1990 phase C/D commercialization decision. The 335 MW EOTV precursor pilot plant is shown as an extension of the systems test activity. The 1990 C/D kick-off will activate work on all major elements leading to the SCB fabrication, EOTV test article assembly, transfer to GEO and precursor testing/beam mapping. The growth Shuttle and Shuttle derived cargo carrier will have an earlier start to transfer the necessary mass to orbit. Subsequent SPS VTO-HL HLLV operations will combine with the Shuttle for full scale build of the TFU. The GRS is proceeding as an earth based receiver of MW energy.

SPS SUMMARY SCHEDULE

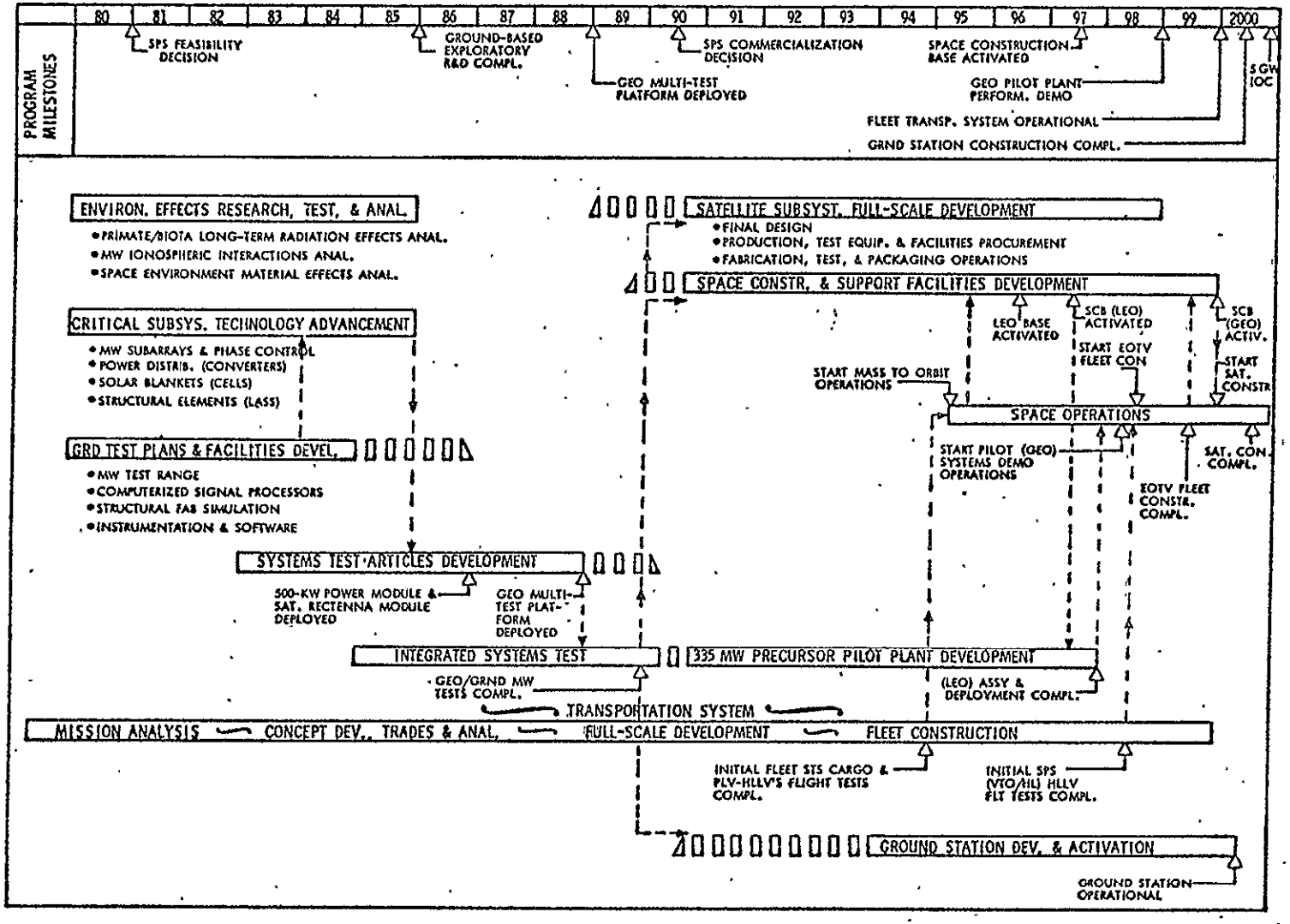

ORIGINAL PAGE IS OF POOR QUALITY

RECTENNA CONSTRUCTION SEQUENCE

Individual schedules of the construction and operational readiness activities were developed on each of the first four ground receiving stations. These schedules were then integrated into the summary flow of activities represented in this chart. The sequences of site preparation, rectenna fabrication/assembly, conversion station grid interface and GRS hook-up indicated variable operational times. However, a pattern was identified that considered the operational requirements, machine utilization, and equipment tear-down, transfer, and set-up. This study lead to the conclusion that two sets of equipment were needed to build the GRS requirements and satisfy the SPS build rate of 2 per year.

RECTENNA CONSTRUCTION SEQUENCE

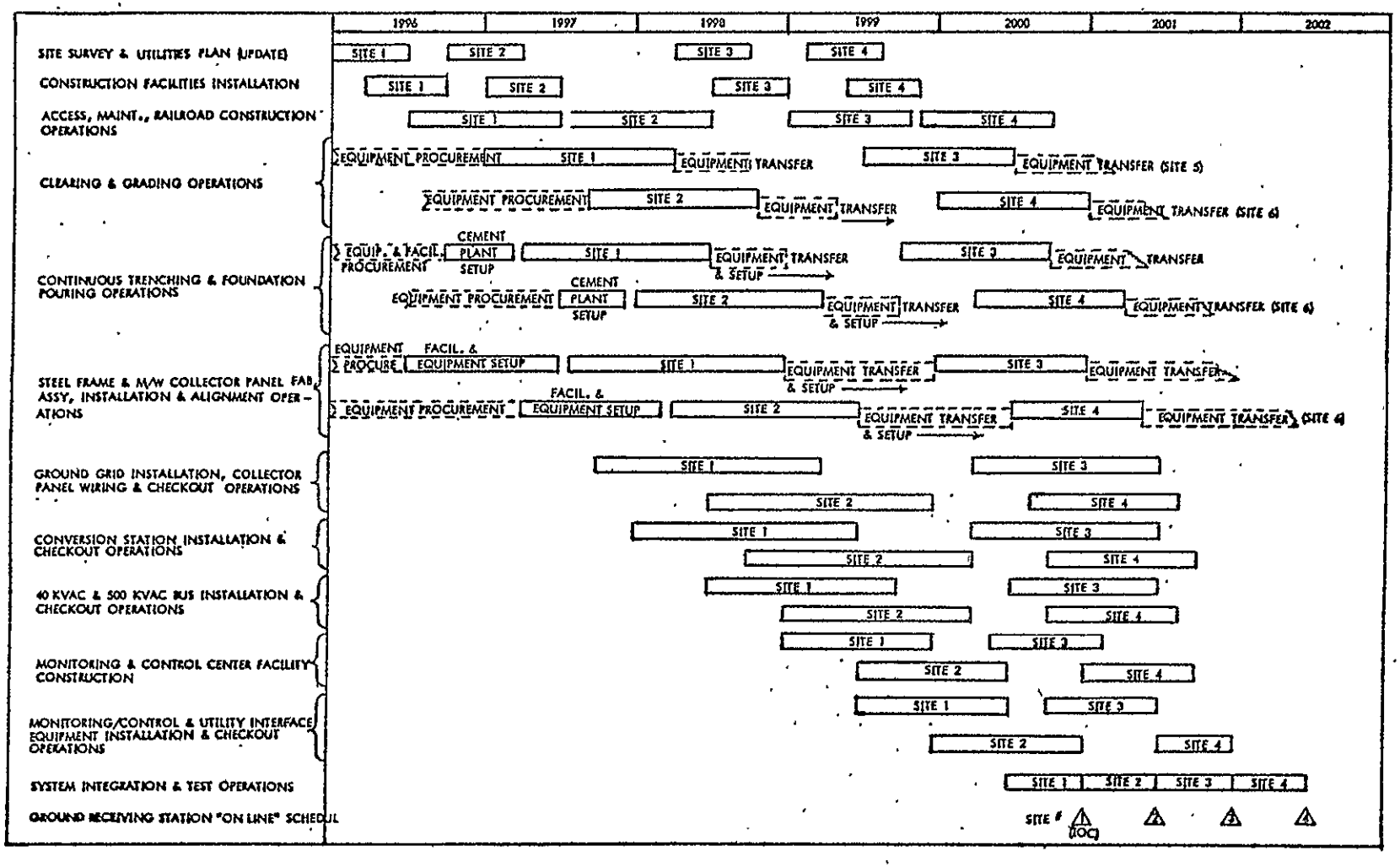

ORIGINAL PAGE IS OF POOR QUALITY

MATERIAL REQUIREMENTS FOR MAIN SATELLITE SYSTEM ELEMENTS

An analysis was completed on natural resource requirements of the satellite, GRS, and space transportation system propellants needed to complete the first SPS in the year 2000. This chart lists material requirements for satellite subsystems. A 25% mass contingency was added to the basic calculation for potential growth of the systems listed.

MATERIAL REQUIREMENTS FOR MAIN SATELLITE SYSTEM ELEMENTS

MATERIAL	STRUCTURE/ MECHANISMS x 10^6 KG	CONCEN- TRATORS x 10^6 KG	SOLAR BLANKET x 10^6 KG	POWER DISTR. & COND. x 10^6 KG	POWER MODULE (KLYSTRONS) x 10^6 KG	TOTAL WEIGHT KG x 10^6	TOTAL WEIGHT LB x 10^6
ALUMINUM	1.769	0.013	0.013	6.824	0.346	8.965	19.768
ALUMINUM OXIDE					0.531	0.531	1.171
ARSENIC			0.465			0.465	1.025
COBALT					0.242	0.242	0.533
COPPER			0.476	0.839	2.550	3.865	8.520
GALLIUM			0.432			0.432	0.952
GLASS FIBER	0.154				0.024	0.178	0.392
GOLD			1.640			1.640	3.615
GRAPHITE	0.309				0.048	0.357	0.787
IRON					0.545	0.545	1.201
KAPTON		1.283	1.219				5.517
NICKEL					0.141	0.141	0.311
PLASTIC				0.681		0.681	1.501
RESIN	0.565				0.088	0.653	1.440
SAPPHIRE			2.700			2.700	5.952
SELENIUM			(34 KG)			(34 KG)	(75 LB)
SILVER			0.172	0.006		0.178	0.392
STEEL				0.506	0.690	1.196	2.637
TEFLON			0.915			0.915	2.017
TIN			0.488			0.488	1.076
TITANIUM				0.028		0.028	0.062
ZINC			(11 KG)			(11 KG)	(24 LB)
SUBTOTAL	2.797	1.296	8.518	8.884	5.205	26.700	58.873
OTHER (ACS & THERMAL)						6.318	13.931
					TOTAL WEIGHT	33.018	72.804

ORIGINAL PAGE IS OF POOR QUALITY

INDUSTRY CONTACTS

During the cost analysis, direct contacts were made with industrial representatives who aided in the development of "grass roots" costing such as that of the support structure for the GRS. These contacts were also used to obtain equipment definitions that facilitated the development of timelines and detail scheduling of operational sequences.

INDUSTRY CONTACTS

ORGANIZATION	PURPOSE
• SME (SOCIETY OF MANUFACTURING ENGINEERS)	OBTAIN TECHNICAL DATA ON ROBOTICALS AND TECHNOLOGY STATUS
• RIVERSIDE CEMENT CO.	RECTENNA CEMENT/CONCRETE REQUIREMENTS AND PROCESSES
• MODERN ALLOYS, INC.	METHODS & EQUIPMENT FOR CONTINUOUS PLACEMENT OF RECTENNA PANEL CONCRETE FOOTINGS
• SANDIA-SOLAR THERMAL	COMPARISON OF STTF CONSTRUCTION/HANDLING APPROACH WITH SPS RECTENNA REQ'TS
• TOWNSEND & BOTTUM, CONST. MGRS, 10 MW SOLAR PLANT IN BARSTOW, CA	SITE PREPARATION AND CONSTRUCTION OPERATIONS
• AMERICAN BRIDGE - A DIVISION OF UNITED STATES STEEL	STEEL REQ'TS & CONSTRUCTION APPROACH FOR INSTALLATION OF RECTENNA PANELS
• ALPHA-BETA DISTRIBUTION CENTER	ANALYSIS OF MATERIALS HANDLING SYSTEMS
• CATAPILLAR	EARTH MOVING & GRADING EQUIPMENT
• INTERNATIONAL HARVESTER	EARTH MOVING & GRADING EQUIPMENT
• SOUTHERN CALIFORNIA EDISON	DC/AC POWER DISTRIBUTION LINES/TOWERS

ORIGINAL PAGE IS OF POOR QUALITY

LITERATURE SOURCES

This is a list of documents researched for cost and programmatic information on the building of the GRS and for the definition of resource availability and consumption.

LITERATURE SOURCES

- THE RICHARDSON RAPID SYSTEM, GENERAL CONSTRUCTION ESTIMATING STANDARDS 1978 - 79 EDITION
- MEANS BUILDING CONSTRUCTION COST DATA
- NATIONAL CONSTRUCTION ESTIMATOR, CRAFTSMAN BOOK CO., 1978
- MINERAL FACTS AND PROBLEMS, 1978 EDITION, U.S. DEPARTMENT OF INTERIOR
- SURVEY OF AVAILABILITY AND ECONOMICAL EXTRACTABILITY OF GALLIUM FROM EARTH RESOURCES, ALUMINUM COMPANY OF AMERICA, 1 OCTOBER 1976
- STATISTICAL ABSTRACT OF THE UNITED STATES 1976, U.S. DEPARTMENT OF COMMERCE
- THE WORLD ALMANAC AND BOOK OF FACTS, 1979, GROSSET AND DUNLAP
- UNITED STATES MINERAL RESOURCES, U.S. DEPARTMENT OF INTERIOR (1973)
- CHEMICAL INFORMATION SERVICE S.R.I.
- SOCIETY OF THE PLASTICS INDUSTRY
- TYCO LABORATORIES, INC. - SAPHIKON DIVISION
- UNION CARBIDE CORP. - ELECTRONICS DIVISION
- CHEMICAL ENGINEERING
- AVIATION WEEK AND SPACE TECHNOLOGY
- CHEMPLAST INC.
- ALUMINUM COMPANY OF AMERICA REPORT
- MODERN PLASTICS

ORIGINAL PAGE IS OF POOR QUALITY

SUMMARY

The SPS cost data base has been expanded with "grass roots" analysis of the GRS; Rockwell contract and company sponsored activity pertinent to the transportation system; and the improved capability of the Rockwell cost model/computer program. SPS Program plans have been expanded on material resources and on DDT&E/TFU phasing schedules and technology networks plus the GRS.

SUMMARY

- COST AND PROGRAMMATIC DATA BASE EXPANDED
- DDT&E COSTED TO SPS SCENARIO
- UNCERTAINTIES OF COST AND DESIGN EVALUATED
  - TRANSPORTATION & FACILITIES
  - GROUND RECEIVING STATION
  - SATELLITE ANTENNA
- NATURAL RESOURCES IDENTIFIED FOR MAIN SPS ELEMENTS
- TECHNOLOGY DEVELOPMENT ACTIVITIES SCHEDULED
  - MW, PD&C, LASS

ORIGINAL PAGE IS
OF POOR QUALITY