U.S. Department of Commerce
National Technical Information Service

N79-28139

PRESSURE DISTRIBUTIONS ON THREE DIFFERENT CRUCIFORM AFT-TAIL CONTROL SURFACE OF A WINGLESS MISSILE AT MACH 1.60, 2.36, AND 3.70 VOLUME II - CLIPPED DELTA TAIL

NATIONAL AERONAUTICS AND SPACE ADMINISTRATION
WASHINGTON, DC

DEC 79

N79-28139

NASA Technical Memorandum 80097

Pressure Distributions on Three Different Cruciform Aft-Tail Control Surfaces of a Wingless Missile at Mach 1.60, 2.36, and 3.70

Volume II - Clipped Delta Tail

Milton Lamb, Wallace C. Sawyer,
Donald L. Wassum, and C. Donald Babb
Langley Research Center
Hampton, Virginia

National Aeronautics
and Space Administration

Scientific and Technical
Information Branch

1979

REPRODUCED BY
NATIONAL TECHNICAL
INFORMATION SERVICE
U.S. DEPARTMENT OF COMMERCE
SPRINGFIELD, VA. 22161

1. Report No.
NASA TM-80097

2. Government Accession No.

3. Recipient's Catalog No.
N79-28139

4. Title and Subtitle
PRESSURE DISTRIBUTIONS ON THREE DIFFERENT CRUCIFORM AFT-TAIL CONTROL SURFACES OF A WINGLESS MISSILE AT MACH 1.60, 2.36, AND 3.70 - VOLUME II - CLIPPED DELTA TAIL

5. Report Date
August 1979

6. Performing Organization Code

7. Author(s)
Milton Lamb, Wallace C. Sawyer, Donald L. Wassum, and C. Donald Babb

8. Performing Organization Report No.
L-12993

9. Performing Organization Name and Address

NASA Langley Research Center
Hampton, VA 23665

10. Work Unit No.
505-11-23-03

11. Contract or Grant No.

12. Sponsoring Agency Name and Address

National Aeronautics and Space Administration
Washington, DC 20546

13. Type of Report and Period Covered
Technical Memorandum

14. Sponsoring Agency Code

15. Supplementary Notes

16. Abstract

The results of pressure distribution tests conducted in the Langley Unitary Plan wind tunnel are presented without analysis. The data were obtained for three sets of cruciform aft-tail control surfaces on a wingless missile model at Mach numbers of 1.60, 2.36, and 3.70 for angles of attack from -4° to 20°, model roll angles from 0° to 90°, and tail deflections of 0° and -15°. The test Reynolds number used was 6.6×10^{6} per meter.

17. Key Words (Suggested by Author(s))

Pressure distributions
Missile tails
Supersonic speeds

18. Distribution Statement

Unclassified - Unlimited

Subject Category 02

19. Security Classif. (of this report)
Unclassified

20. Security Classif. (of this page)
Unclassified

21. No. of Pages
343

22. Price*

* For sale by the National Technical Information Service, Springfield, Virginia 22161

SUMMARY

The results of pressure distribution tests conducted in the Langley Unitary Plan wind tunnel are presented without analysis. The data were obtained for three sets of cruciform aft-tail control surfaces on a wingless missile model at Mach numbers of 1.60, 2.36, and 3.70 for angles of attack from -4° to 20°, model roll angles from 0° to 90°, and tail deflections of 0° and -15°. The test Reynolds number used was 6.6×10^6 per meter.

Volume I presents the pressure distributions for a trapezoidal tail; volume II, for a clipped delta tail; and volume III, for a cranked tail.

INTRODUCTION

Theoretical aerodynamicists are continually seeking consistent and accurate experimental data as an aid in the development and evaluation of computational methods. This study was made to provide a complete set of pressure distribution data on three sets of cruciform aft-tail control surfaces for a wingless missile model.

The investigation was conducted in the Langley Unitary Plan wind tunnel at Mach numbers of 1.60, 2.36, and 3.70 at a Reynolds number per meter of 6.6×10^6. The angle of attack was varied from -4° to 20°, model roll angle was varied from 0° to 90° in 22.5° increments, and tail deflections were 0° to -15°. The model consisted of a body of revolution with interchangeable aft-tail control surfaces. Three sets of model tails with identical root chords and span lengths were used. The pressures were measured on two adjacent tail surfaces (tails 1 and 2) using 91 pressure orifices per tail surface. The results are presented in plotted and tabular form.

SYMBOLS

b	exposed tail span, cm
C_p	pressure coefficient, $\dfrac{p_l - p_\infty}{q_\infty}$ (Cp on tables and plots)
c	tail local chord, cm
M	free-stream Mach number
p_l	local pressure, Pa
p_∞	free-stream static pressure, Pa

L-12993

q_∞	free-stream dynamic pressure, Pa
x	longitudinal distance measured from local chord leading edge, cm
x/c	fraction of local tail chord (see fig. 1)
y	lateral distance measured from root chord, cm
y/b	fraction of exposed tail span (see fig. 1)
α	angle of attack, deg
δ	pitch control deflection (negative with leading edge down; without subscripts, refers to all tails; with subscripts, only to those tails indicated), deg
ϕ	model roll angle, positive clockwise when viewed from rear ($\phi = 0^\circ$ when tail no. 1 is in lower vertical position, see fig. 1), deg

Abbreviations:

L.S.	lower surface (see fig. 1)
U.S.	upper surface (see fig. 1)

APPARATUS AND TESTS

Tunnel

The tests were conducted in both the low and high Mach number test sections of the Langley Unitary Plan wind tunnel which is a variable-pressure, continuous-flow facility. The asymmetric sliding-block nozzles lead to the test sections and permit a continuous variation in Mach number from about 1.5 to 2.9 in the low Mach number test section and from about 2.3 to 4.7 in the high Mach number test section.

Model

The configuration consisted of a simple wingless aft-tail cruciform control missile model with three sets of interchangeable tail surfaces. The pressure tubes were integrally cast into the tail surfaces to permit a greater number of more closely spaced pressure orifices (91 per tail surface). Details of the model and pressure orifice locations are given in figures 1 and 2. The upper- and lower-surface orifices were serviced by the same pressure tube, and thus required the taping of one surface while the other surface was being tested. The missile model was sting mounted from the rear on the main support system of the tunnel.

Test Conditions

Tests were conducted at the following test conditions:

Mach number	Stagnation temperature, K	Stagnation pressure, kPa	Reynolds number, m^{-1}
1.60	339	54.6	6.6×10^6
2.36	339	75.7	6.6
3.70	339	152.7	6.6

The dew-point temperature measured at stagnation pressures was maintained below 239 K to assure negligible condensation effects. In order to assure a turbulent boundary layer, all tests were conducted with a boundary-layer transition strip on the body 3.05 cm aft of the nose. At a Mach number of 1.60, the transition strip consisted of a 0.16-cm-wide strip of sprinkled No. 60 sand. For the other two Mach numbers, the strip was composed of single-spaced No. 40 sand.

Measurements

The angles of attack have been corrected for tunnel-flow misalinement. Pressures were measured by six scanning valves. All pressure coefficients were referenced to free-stream conditions. The accuracy of the scanning-valve system is within 1 percent of the gage range. When expressed as pressure coefficients C_p, 1 percent of the gage range is 0.030 at Mach 1.60, 0.016 at Mach 2.36, and 0.024 at Mach 3.70.

PRESENTATION OF RESULTS

Due to the large volume of data and for the convenience of the reader, the data are presented as three volumes as follows:

Volume I . . . . Trapezodial tail (planform A)
Volume II . . . . Clipped delta tail (planform B)
Volume III . . . . Cranked tail (planform C)

The pressure coefficients are given in tables I to XXIV, and, to aid the reader, an index of tables follows:

Table	M	ϕ, deg	$\delta_{1,3}$, deg	$\delta_{2,4}$, deg
I	1.60	0	0	0
II		22.5		
III		45		
IV		67.5		
V	↓	90		
VI	2.36	0		
VII		22.5		
VIII		45		
IX		67.5		
X	↓	90		
XI	3.70	0		
XII		22.5		
XIII		45		
XIV		67.5		
XV	↓	90		↓
XVI	1.60	0		-15
XVII	2.36			
XVIII	3.70	↓	↓	
XIX	1.60	45	-15	
XX	2.36			
XXI	3.70	↓		↓
XXII	1.60	90		0
XXIII	2.36			
XXIV	3.70	↓	↓	↓

Only a limited amount of machine-plotted data are presented to show trends, but all data are presented in tabular form. The plotted data are presented in the following figures:

	Figure
Pressure coefficients, $\phi = 0^{\circ}$, $\delta = 0^{\circ}$ –	
$M = 1.60$	3
$M = 2.36$	4
$M = 3.70$	5
Pressure coefficients, $\phi = 22.5^{\circ}$, $\delta = 0^{\circ}$ –	
$M = 1.60$	6
$M = 2.36$	7
$M = 3.70$	8

Figure

Pressure coefficients, $\phi = 45^\circ$, $\delta = 0^\circ$ -
  M = 1.60 9
  M = 2.36 10
  M = 3.70 11

Pressure coefficients, $\phi = 67.5^\circ$, $\delta = 0^\circ$ -
  M = 1.60 12
  M = 2.36 13
  M = 3.70 14

Pressure coefficients, $\phi = 90^\circ$, $\delta = 0^\circ$ -
  M = 1.60 15
  M = 2.36 16
  M = 3.70 17

Pressure coefficients, $\phi = 0^\circ$, $\delta_{2,4} = -15^\circ$ -
  M = 1.60 18
  M = 2.36 19
  M = 3.70 20

Pressure coefficients, $\phi = 45^\circ$, $\delta = -15^\circ$ -
  M = 1.60 21
  M = 2.36 22
  M = 3.70 23

Pressure coefficients, $\phi = 90^\circ$, $\delta_{1,3} = -15^\circ$ -
  M = 1.60 24
  M = 2.36 25
  M = 3.70 26

Langley Research Center
National Aeronautics and Space Administration
Hampton, VA 23665
May 25, 1979

TABLE I.- PRESSURE COEFFICIENTS, $\phi = 0°$, $\delta = 0°$, M = 1.60

(a) $\alpha = -3.35°$

	Cp at y/b of													
	0.02		0.22		0.44		0.56		0.67		0.83		0.98	
x/c	U.S.	L.S.	U.S.	L.S.	U.S.	L.S.	U.S.	L.S.	U.S.	L.S.	U.S.	L.S.	U.S.	L.S.
.05	.1524	.2319	.3639	.4295	.3934	.5792	.4167	.6131	.3038	.5847				.5946
.10	.1354	.2038	.3021	.4141	.3831	.5008			.3748	.5634	.4247	.5737	.5166	.5577
.15	.1299	.1952	.2665	.3645	.3382	.4465			.3314	.5052			.3705	.4448
.20	.1118	.1706	.2407	.3353	.3074	.4055	.3491	.4273	.3364	.4678	.3740	.4353	.3367	.3920
.25					.2783	.3636	.3307	.3946	.3321	.4250	.3334	.4262	.2831	.3244
.30	-.0196	-.0024							.3039	.3872	.3150	.4410	.2477	.2939
.40	.0404	.1028	-.1207	-.1156	-.0969	-.0903	-.1031	-.0814	-.0918	-.0802	.2886	.3499	.2177	.2352
.50			-.0778	-.0516	-.1043	-.0833	-.1066	-.0864			-.0938	-.0951	.1593	.1372
.60					-.1061	-.0823	-.0990	-.0806			-.1109	-.1324	-.2988	-.3246
.70	-.0041	-.0039	.0077	.0176	-.0963	-.0804	-.1255	-.1456	-.3111	-.3078	-.3160	-.3066	-.3046	-.3341
.80	-.2488	-.1940	-.2461	-.2502			-.3120	-.3081	-.3229	-.3142	-.3243	-.3224	-.2351	-.2637
.90	-.2178	-.2237	-.2731	-.2733	-.2570	-.2602	-.3069	-.2949	-.3106	-.3031	-.2915	-.2894	-.2444	-.2710
.95	-.2238	-.2304	-.2837	-.2806			-.2856	-.2748	-.2881	-.2812	-.2851	-.2851	-.2478	-.2765

TAIL 1

	Cp at y/b of													
	0.02		0.22		0.44		0.56		0.67		0.83		0.98	
x/c	U.S.	L.S.	U.S.	L.S.	U.S.	L.S.	U.S.	L.S.	U.S.	L.S.	U.S.	L.S.	U.S.	L.S.
.05	.3309	.1321	.5943	.1865			.7357	.2032			.6779	.1465	.7257	.0887
.10	.3266	.1037					.6426	.2915	.6603	.2696			.5555	.1965
.15					.5496	.2576	.5932	.2367	.6229	.3133	.6515	.2541	.4858	.2556
.20	.2896	.0779					.5437	.2766	.5535	.3001			.4187	.2591
.25	.0334	-.0964	.0701	.1235	.4533	.2254	.5006	.2571	.5269	.2824	.5631	.3158	.3689	.0381
.30			-.0534	-.1560			.4433	.2188	.4859	.2625	.5246	.3004	.3227	.2206
.40	.1904	-.0121							-.0422	-.1138	.3919	.0255	.2683	.1880
.50					-.0127	-.1429	-.0203	-.1360	-.0371	-.1333	-.0742	-.1353	.1570	.0759
.60	.1634	-.0430	.1735	-.0694			-.0130	-.1490	-.0260	-.1441	-.1497	-.2245	-.3173	-.3042
.70					.1344	-.1617	-.1629	-.2828	-.2599	-.3291	-.3135	-.3499	-.3339	-.2448
.80	-.1132	-.2163	-.1586	-.2714	-.1550	-.3386	-.2242	-.3460			-.3215	-.3147		
.90	-.1307	-.2112	-.1949	-.3020	-.1775	-.3039	-.1836	-.3091	-.2761	-.2971	-.2943	-.3036	-.2633	-.3435
.95			-.2133	-.2722	-.1867	-.2666	-.1857	-.2911	-.2951	-.3036	-.2830	-.3065	-.2624	-.3576

TAIL 2

ORIGINAL PAGE IS OF POOR QUALITY

TABLE I. - CONTINUED

(b) α = -1.35°

	Cp at y/b of													
	0.02		0.22		0.44		0.56		0.67		0.83		0.98	
x/c	U.S.	L.S.	U.S.	L.S.	U.S.	L.S.	U.S.	L.S.	U.S.	L.S.	U.S.	L.S.	U.S.	L.S.
.05	.1425	.2026	.3453	.4018	.3835	.5829	.4033	.6316	.2956	.5622				.5809
.10	.1380	.1922	.2959	.4053	.3830	.5078			.3849	.5840	.4475	.6106	.5167	.5494
.15	.1401	.1896	.2625	.3610	.3448	.4593			.3456	.5236			.3523	.4271
.20	.1210	.1639	.2382	.3373	.3230	.4223	.3816	.4416	.3580	.4825	.3816	.5047	.3142	.3657
.25					.2907	.3819	.3429	.4114	.3566	.4356	.3383	.4904	.2809	.3121
.30	.0297	.0662							.3253	.4006	.3261	.4511	.2256	.2712
.40	.0660	.1109	-.0932	-.0967	-.0869	-.0864	-.0950	-.0749	-.0830	-.0728	.2914	.3589	.1951	.2212
.50			-.0372	-.0098	-.0974	-.0855	-.0990	-.0838			-.1052	-.0936	.1426	.1299
.60					-.0982	-.0763	-.0955	-.0740			-.1269	-.1395	-.2941	-.3277
.70	.0133	.0173	.0209	.0377	-.0800	-.0637	-.1249	-.1475	-.3109	-.3051	-.3258	-.3320	-.2943	-.3365
.80	-.2208	-.1788	-.2291	-.2294			-.3084	-.3045	-.3217	-.3152	-.3265	-.3243	-.2437	-.2783
.90	-.1918	-.1954	-.2614	-.2636	-.2457	-.2477	-.3046	-.2813	-.3117	-.3037	-.2959	-.2955	-.2512	-.2761
.95	-.1916	-.2009	-.2676	-.2630			-.2815	-.2666	-.2885	-.2823	-.2908	-.2923	-.2570	-.2809

TAIL 1

	Cp at y/b of													
	0.02		0.22		0.44		0.56		0.67		0.83		0.98	
x/c	U.S.	L.S.	U.S.	L.S.	U.S.	L.S.	U.S.	L.S.	U.S.	L.S.	U.S.	L.S.	U.S.	L.S.
.05	.2482	.1778	.4653	.3296			.6597	.4452			.5625	.4282	.6390	.3722
.10	.2498	.1571					.5568	.4338	.5678	.4324			.5005	.3939
.15					.4713	.3542	.5146	.3966	.5427	.4236	.6085	.3686	.4323	.3490
.20	.2112	.1302					.4747	.3672	.4841	.3964			.3715	.3044
.25	-.0003	-.0474	.0413	.1868	.3924	.3046	.4409	.3417	.4677	.3692	.5104	.4038	.3356	.2659
.30			-.0899	-.1201			.3953	.2862	.4377	.3354	.4822	.3862	.3058	.2439
.40	.1269	.0504							-.0619	-.0793	.3672	.2833	.2632	.2053
.50					-.0561	-.1023	-.0565	-.0963	-.0657	-.1015	-.0899	-.1084	.1557	.0819
.60	.1098	-.0027	.1065	.0024			-.0569	-.1093	-.0637	-.1047	-.1663	-.2027	-.3130	-.2972
.70					-.0223	-.1179	-.2026	-.2589	-.2837	-.3073	-.3285	-.3301	-.3366	-.2571
.80	-.1365	-.1985	-.1875	-.2467	-.2080	-.3092	-.2922	-.2828			-.3052	-.2924		
.90	-.1547	-.1947	-.2200	-.2737	-.2141	-.2788	-.2781	-.2690	-.2907	-.2689	-.2884	-.2912	-.2709	-.3103
.95			-.2342	-.2557	-.2151	-.2613	-.2636	-.2672	-.2811	-.2744	-.2861	-.2914	-.2718	-.3021

TAIL 2

TABLE I - CONTINUED

(c) α = 0.66°

	Cp at y/b of													
	0.02		0.22		0.44		0.56		0.67		0.83		0.98	
x/c	U.S.	L.S.	U.S.	L.S.	U.S.	L.S.	U.S.	L.S.	U.S.	L.S.	U.S.	L.S.	U.S.	L.S.
.05	.1638	.2384	.3583	.4092	.3684	.5948	.3759	.6475	.2878	.5737				.5926
.10	.1531	.2126	.3096	.4232	.3892	.5180			.3921	.6077	.4666	.6413	.4977	.5561
.15	.1519	.2169	.2737	.3793	.3517	.4739			.3623	.5444			.3671	.4338
.20	.1454	.2021	.2494	.3507	.3334	.4385	.3848	.4648	.3766	.4985	.3900	.5268	.3297	.3769
.25					.3067	.4020	.3486	.4333	.3740	.4488	.3552	.5112	.2818	.3278
.30	.0275	.0507							.3448	.4191	.3485	.4674	.2509	.2886
.40	.0775	.1398	-.0806	-.0856	-.0772	-.0771	-.0861	-.0685	-.0652	-.0632	.3066	.3720	.2171	.2421
.50			-.0348	-.0153	-.0934	-.0784	-.0894	-.0776			-.0975	-.0846	.1625	.1532
.60					-.0924	-.0708	-.0871	-.0666			-.1280	-.1368	-.2820	-.3171
.70	.0483	.0474	.0506	.0637	-.0687	-.0612	-.1205	-.1439	-.3096	-.2996	-.3266	-.3296	-.2552	-.3148
.80	-.2037	-.1525	-.2032	-.2144			-.3079	-.3021	-.3191	-.3122	-.3203	-.3196	-.2591	-.2777
.90	-.1743	-.1784	-.2398	-.2409	-.2356	-.2358	-.3010	-.2742	-.3079	-.2988	-.2919	-.2927	-.2774	-.2794
.95	-.1744	-.1860	-.2476	-.2419			-.2758	-.2612	-.2848	-.2785	-.2878	-.2883	-.2810	-.2940

TAIL 1

	Cp at y/b of													
	0.02		0.22		0.44		0.56		0.67		0.83		0.98	
x/c	U.S.	L.S.	U.S.	L.S.	U.S.	L.S.	U.S.	L.S.	U.S.	L.S.	U.S.	L.S.	U.S.	L.S.
.05	.1783	.2254	.3324	.4700			.4379	.6005			.4171	.6509	.3899	.5233
.10	.1841	.2139					.4705	.5327	.4749	.5424			.4191	.4671
.15					.3894	.4419	.4280	.4876	.4474	.5237	.5374	.5363	.3729	.4001
.20	.1519	.1868					.3961	.4515	.4094	.4859			.3294	.3432
.25	-.0284	-.0134	.0084	.2504	.3250	.3760	.3694	.4131	.3924	.4471	.4328	.4849	.3019	.2962
.30			-.1224	-.0858			.3379	.3458	.3715	.4033	.4153	.4556	.2770	.2664
.40	.0578	.1317							-.0829	-.0510	.3288	.3225	.2444	.2158
.50					-.0937	-.0633	-.0910	-.0583	-.0971	-.0679	-.1044	-.0905	.1542	.0761
.60	.0546	.0459	.0369	.0745			-.0964	-.0693	-.0974	-.0671	-.1832	-.1873	-.3125	-.3021
.70					-.0985	-.0660	-.2336	-.2287	-.3066	-.2826	-.3405	-.3273	-.3194	-.2655
.80	-.1643	-.1788	-.2216	-.2123	-.2838	-.2691	-.3207	-.2980			-.3081	-.2967		
.90	-.1744	-.1715	-.2485	-.2411	-.2665	-.2479	-.2985	-.2749	-.2811	-.2712	-.2942	-.2824	-.3011	-.2671
.95			-.2468	-.2346	-.2550	-.2294	-.2800	-.2595	-.2860	-.2721	-.2959	-.2806	-.2792	-.2603

TAIL 2

TABLE I.- CONTINUED

(d) α = 2.67°

	Cp at y/b of													
	0.02		0.22		0.44		0.56		0.67		0.83		0.98	
x/c	U.S.	L.S.	U.S.	L.S.	U.S.	L.S.	U.S.	L.S.	U.S.	L.S.	U.S.	L.S.	U.S.	L.S.
.05	.1832	.2767	.3558	.4170	.3572	.6258	.3624	.6691	.2866	.5935				.5844
.10	.1650	.2263	.3189	.4410	.4036	.5378			.3946	.6309	.4835	.6642	.4054	.5710
.15	.1510	.2325	.2817	.3969	.3645	.4930			.3772	.5628			.3708	.4462
.20	.1504	.2245	.2528	.3604	.3440	.4569	.3999	.4831	.3919	.5152	.3978	.5497	.3433	.3925
.25					.3149	.4156	.3573	.4546	.3915	.4698	.3770	.5327	.3062	.3467
.30	-.0031	.0092							.3607	.4453	.3678	.4862	.2756	.3098
.40	.0775	.1621	-.0840	-.0844	-.0736	-.0706	-.0789	-.0596	-.0552	-.0489	.3169	.3839	.2400	.2682
.50			-.0416	-.0264	-.0958	-.0747	-.0840	-.0704			-.0904	-.0785	.1670	.1794
.60					-.0958	-.0708	-.0847	-.0625			-.1280	-.1329	-.2831	-.3052
.70	.0889	.0893	.0943	.0973	-.0690	-.0662	-.1207	-.1380	-.3068	-.2979	-.3250	-.3277	-.2227	-.2860
.80	-.1862	-.1210	-.1754	-.1907			-.3123	-.3005	-.3205	-.3127	-.3177	-.3159	-.2626	-.2795
.90	-.1558	-.1576	-.2187	-.2155	-.2235	-.2251	-.2974	-.2718	-.3054	-.2938	-.2892	-.2907	-.3015	-.2891
.95	-.1560	-.1643	-.2284	-.2210			-.2733	-.2586	-.2844	-.2769	-.2863	-.2861	-.3103	-.3022

TAIL 1

	Cp at y/b of													
	0.02		0.22		0.44		0.56		0.67		0.83		0.98	
x/c	U.S.	L.S.	U.S.	L.S.	U.S.	L.S.	U.S.	L.S.	U.S.	L.S.	U.S.	L.S.	U.S.	L.S.
.05	.1187	.2830	.2031	.5715			.1714	.7026			.1475	.7642	.0997	.6194
.10	.1267	.2779					.3307	.6256	.3020	.6390			.2396	.5427
.15					.2848	.5248	.3201	.5718	.3255	.6070	.4140	.6016	.2715	.4502
.20	.1089	.2553					.3107	.5251	.3238	.5584			.2942	.3792
.25	-.0569	.0198	-.0349	.3055	.2480	.4401	.2937	.4783	.3158	.5094	.3447	.5475	.2813	.3182
.30			-.1502	-.0515			.2702	.3958	.2968	.4549	.3306	.5058	.2622	.2791
.40	.0260	.2063							-.1100	-.0296	.2722	.3512	.2344	.2155
.50					-.1311	-.0218	-.1258	-.0228	-.1293	-.0354	-.1273	-.0703	.1475	.0708
.60	.0126	.1002	-.0320	.1424			-.1348	-.0283	-.1328	-.0290	-.2015	-.1657	-.3135	-.3063
.70					-.1428	-.0019	-.2588	-.1969	-.3271	-.2577	-.3477	-.3090	-.2647	-.2973
.80	-.1900	-.1614	-.2638	-.1866	-.3286	-.2025	-.3417	-.2633			-.3122	-.3201		
.90	-.1797	-.1542	-.2789	-.2137	-.3032	-.1964	-.3038	-.2482	-.2930	-.2798	-.3057	-.3080	-.3491	-.2593
.95			-.2530	-.2138	-.2668	-.1855	-.2845	-.2417	-.2986	-.2969	-.3047	-.2933	-.3481	-.2517

TAIL 2

TABLE I. - CONTINUED

(a) α = 4.66°

	Cp at y/b of													
	0.02		0.22		0.44		0.56		0.67		0.83		0.98	
x/c	U.S.	L.S.	U.S.	L.S.	U.S.	L.S.	U.S.	L.S.	U.S.	L.S.	U.S.	L.S.	U.S.	L.S.
.05	.2011	.3116	.3646	.4231	.3723	.6569	.3601	.6904	.2924	.6046				.5877
.10	.1808	.2417	.3302	.4627	.4183	.5620			.4015	.6510	.4917	.6821	.3038	.5854
.15	.1569	.2466	.2923	.4132	.3861	.5114			.3568	.5767			.3694	.4617
.20	.1541	.2417	.2609	.3680	.3639	.4703	.4099	.5026	.4087	.5294	.3994	.5714	.3594	.4070
.25					.3273	.4316	.3657	.4696	.4077	.4919	.3970	.5499	.3276	.3657
.30	-.0079	-.0106							.3736	.4675	.3861	.5006	.2985	.3299
.40	.0751	.1605	-.0948	-.0888	-.0705	-.0649	-.0710	-.0529	-.0465	-.0329	.3307	.3942	.2622	.2906
.50			-.0600	-.0429	-.0965	-.0699	-.0786	-.0615			-.0800	-.0759	.2149	.2023
.60					-.0973	-.0698	-.0807	-.0568			-.1236	-.1307	-.2821	-.2961
.70	.1340	.1305	.1518	.1320	-.0758	-.0705	-.1198	-.1344	-.3011	-.2970	-.3201	-.3265	-.2009	-.2531
.80	-.1641	-.0960	-.1458	-.1645			-.3145	-.3006	-.3191	-.3135	-.3142	-.3085	-.2556	-.2763
.90	-.1287	-.1339	-.2018	-.1969	-.2116	-.2291	-.2934	-.2702	-.2989	-.2855	-.2859	-.2866	-.3213	-.2962
.95	-.1259	-.1366	-.2058	-.2026			-.2712	-.2538	-.2816	-.2737	-.2822	-.2834	-.3323	-.3095

TAIL 1

	Cp at y/b of													
	0.02		0.22		0.44		0.56		0.67		0.83		0.98	
x/c	U.S.	L.S.	U.S.	L.S.	U.S.	L.S.	U.S.	L.S.	U.S.	L.S.	U.S.	L.S.	U.S.	L.S.
.05	.0608	.3529	.0777	.6615			.0358	.7891			-.0113	.8507	-.0387	.6876
.10	.0704	.3556					.1388	.7091	.1413	.7159			.0927	.6092
.15					.1623	.5986	.1865	.6471	.1715	.6746	.2591	.6769	.1409	.5010
.20	.0723	.3442					.1935	.5899	.1817	.6175			.1629	.4227
.25	-.0870	.0636	-.0759	.3573	.1546	.4936	.1960	.5313	.2029	.5613	.2105	.5993	.1657	.3557
.30			-.1775	-.0172			.1815	.4329	.2083	.4979	.2169	.5483	.1715	.3110
.40	-.0021	.2889							-.1447	-.0091	.1909	.3768	.1867	.2337
.50					-.1685	.0302	-.1688	.0189	-.1698	-.0025	-.1629	-.0481	.1267	.0702
.60	-.0221	.1621	-.0836	.2136			-.1754	.0256	-.1756	.0105	-.2266	-.1390	-.3125	-.3120
.70					-.1814	.1171	-.2868	-.1464	-.3522	-.2308	-.3554	-.2892	-.2713	-.3146
.80	-.2073	-.1408	-.2906	-.1644	-.3530	-.1289	-.3519	-.1967			-.3224	-.2965		
.90	-.1967	-.1336	-.2993	-.1874	-.3165	-.1510	-.3181	-.1689	-.3091	-.2377	-.3153	-.2976	-.3455	-.2416
.95			-.2433	-.1912	-.2710	-.1587	-.2875	-.1620	-.3078	-.2488	-.3126	-.2957	-.3493	-.2344

TAIL 2

TABLE I.- CONTINUED

(f) α = 6.65°

	Cp at y/b of													
	0.02		0.22		0.44		0.56		0.67		0.83		0.98	
x/c	U.S.	L.S.	U.S.	L.S.	U.S.	L.S.	U.S.	L.S.	U.S.	L.S.	U.S.	L.S.	U.S.	L.S.
.05	.2161	.3419	.3705	.4372	.3764	.6832	.3683	.7111	.2632	.6069				.5772
.10	.1957	.2666	.3374	.4890	.4409	.5833			.4025	.6711	.4889	.6986	.2360	.6013
.15	.1681	.2704	.3036	.4351	.4039	.5283			.4058	.5901			.3587	.4764
.20	.1589	.2602	.2752	.3842	.3695	.4833	.4170	.5188	.4182	.5443	.4013	.5915	.3665	.4238
.25					.3321	.4412	.3757	.4853	.4151	.5150	.4101	.5727	.3435	.3853
.30	-.0158	-.0089							.3825	.4895	.3974	.5124	.3166	.3486
.40	.0698	.1553	-.1016	-.0892	-.0669	-.0563	-.0656	-.0424	-.0358	-.0251	.3409	.4019	.2855	.3128
.50			-.0693	-.0550	-.0958	-.0615	-.0726	-.0506			-.0677	-.0752	.2463	.2281
.60					-.0926	-.0644	-.0726	-.0523			-.1136	-.1292	-.2690	-.2857
.70	.1748	.1676	.1931	.1697	-.0721	-.0695	-.1155	-.1347	-.2937	-.2968	-.3137	-.3247	-.1918	-.2283
.80	-.1385	-.0767	-.1221	-.1435			-.3092	-.2984	-.3160	-.3119	-.3087	-.2939	-.2404	-.2639
.90	-.1007	-.1063	-.1840	-.1790	-.2137	-.2360	-.2870	-.2602	-.2890	-.2764	-.2803	-.2825	-.3308	-.3062
.95	-.0916	-.1019	-.1856	-.1802			-.2678	-.2517	-.2760	-.2676	-.2760	-.2798	-.3417	-.3191

TAIL 1

	Cp at y/b of													
	0.02		0.22		0.44		0.56		0.67		0.83		0.98	
x/c	U.S.	L.S.	U.S.	L.S.	U.S.	L.S.	U.S.	L.S.	U.S.	L.S.	U.S.	L.S.	U.S.	L.S.
.05	-.0123	.4109	-.0400	.7473			-.0742	.8609			-.1154	.9079	-.1291	.7508
.10	.0073	.4282					.0022	.7748	.0272	.7780			-.0151	.6649
.15					.0487	.6639	.0503	.7045	.0480	.7294	.1186	.7329	.0495	.5479
.20	.0380	.4363					.0811	.6392	.0574	.6666			.0833	.4667
.25	-.1081	.1209	-.1408	.3969	.0631	.5353	.0914	.5721	.0842	.6027	.0704	.6403	.0978	.3929
.30			-.2210	.0148			.0849	.4641	.0899	.5314	.0857	.5851	.1016	.3458
.40	-.0201	.3800							-.1920	.0108	.0883	.4054	.1013	.2598
.50					-.2266	.1019	-.2200	.0691	-.2178	.0368	-.2065	-.0217	.0600	.0833
.60	-.0505	.2179	-.1057	.2656			-.2303	.1005	-.2242	.0630	-.2541	-.1062	-.3360	-.3152
.70					-.2203	.2499	-.3285	-.0610	-.3740	-.1893	-.3526	-.2614	-.3116	-.3018
.80	-.2205	-.1153	-.3083	-.1458	-.3659	-.0971	-.3466	-.1068			-.3365	-.2675		
.90	-.2119	-.1097	-.2928	-.1522	-.3259	-.1333	-.3268	-.1150	-.3209	-.1543	-.3265	-.2676	-.3736	-.2559
.95			-.1995	-.1632	-.2763	-.1393	-.2996	-.1240	-.3158	-.1541	-.3172	-.2709	-.3558	-.2282

TAIL 2

TABLE I. - CONTINUED

(g) α = 8.65°

	Cp at y/b of													
	0.02		0.22		0.44		0.56		0.67		0.83		0.98	
x/c	U.S.	L.S.	U.S.	L.S.	U.S.	L.S.	U.S.	L.S.	U.S.	L.S.	U.S.	L.S.	U.S.	L.S.
.05	.2308	.3746	.3862	.4637	.3726	.7080	.3666	.7250	.2544	.6159				.5786
.10	.2110	.2916	.3597	.5182	.4471	.6024			.3991	.6941	.4764	.7193	.2006	.6164
.15	.1799	.2949	.3253	.4514	.4064	.5459			.4113	.6127			.3620	.4915
.20	.1695	.2800	.2897	.3971	.3738	.5015	.4179	.5472	.4257	.5720	.4098	.6114	.3798	.4381
.25					.3399	.4588	.3746	.5108	.4245	.5424	.4232	.5824	.3663	.4028
.30	-.0121	-.0045							.3972	.5093	.4123	.5225	.3503	.3677
.40	.0711	.1545	-.1025	-.0845	-.0637	-.0471	-.0535	-.0307	-.0225	-.0232	.3603	.4135	.3223	.3363
.50			-.0593	-.0537	-.0877	-.0565	-.0578	-.0457			-.0517	-.0716	.2797	.2542
.60					-.0769	-.0569	-.0611	-.0467			-.1017	-.1224	-.2524	-.2739
.70	.2164	.2032	.2271	.1993	-.0592	-.0669	-.1102	-.1314	-.2918	-.2940	-.3091	-.3205	-.1877	-.2041
.80	-.1198	-.0542	-.1024	-.1237			-.3032	-.2939	-.3128	-.3079	-.3019	-.2952	-.2266	-.2541
.90	-.0653	-.0722	-.1649	-.1541	-.2123	-.2380	-.2808	-.2539	-.2829	-.2691	-.2730	-.2783	-.3403	-.3148
.95	-.0581	-.0646	-.1659	-.1514			-.2629	-.2465	-.2726	-.2620	-.2692	-.2767	-.3486	-.3254

TAIL 1

	Cp at y/b of													
	0.02		0.22		0.44		0.56		0.67		0.83		0.98	
x/c	U.S.	L.S.	U.S.	L.S.	U.S.	L.S.	U.S.	L.S.	U.S.	L.S.	U.S.	L.S.	U.S.	L.S.
.05	-.1032	.4601	-.1432	.8320			-.1680	.9171			-.2057	.9604	-.1960	.8000
.10	-.0444	.4994					-.1091	.8316	-.0714	.8322			-.1107	.7107
.15					-.0506	.7181	-.0580	.7570	-.0517	.7789	.0070	.7808	-.0491	.5874
.20	.0001	.5314					-.0311	.6857	-.0573	.7117			-.0087	.5053
.25	-.1350	.1876	-.2114	.4310	-.0366	.5750	-.0114	.6128	-.0276	.6432	-.0300	.6849	.0133	.4264
.30			-.2705	.0569			-.0112	.4954	-.0196	.5668	-.0202	.6257	.0287	.3787
.40	-.0428	.4666							-.2533	.0361	-.0107	.4317	.0332	.2865
.50					-.2766	.1910	-.2707	.1471	-.2685	.0973	-.2547	.0066	-.0005	.1003
.60	-.0728	.2778	-.1440	.3185			-.2801	.2164	-.2724	.1451	-.3089	-.0690	-.3712	-.3279
.70					-.2771	.3043	-.3630	.0415	-.3396	-.1005	-.3506	-.2235	-.3551	-.3003
.80	-.2326	-.0865	-.3229	-.1189	-.3574	-.0691	-.3500	-.0714			-.3535	-.2219		
.90	-.2427	-.0813	-.2901	-.1163	-.3394	-.1122	-.3313	-.0856	-.3172	-.0888	-.3397	-.2071	-.4122	-.2732
.95			-.1828	-.1396	-.3028	-.1177	-.3160	-.0951	-.3209	-.1142	-.3288	-.2060	-.4016	-.2730

TAIL 2

TABLE I.- CONTINUED

(h) α = 10.68°

	Cp at y/b of													
	0.02		0.22		0.44		0.56		0.67		0.83		0.98	
x/c	U.S.	L.S.	U.S.	L.S.	U.S.	L.S.	U.S.	L.S.	U.S.	L.S.	U.S.	L.S.	U.S.	L.S.
.05	.2521	.4090	.4121	.4875	.3842	.7368	.3572	.7517	.2401	.6419				.5684
.10	.2322	.3171	.3707	.5444	.4517	.6264			.3994	.7150	.4765	.7357	.1890	.6327
.15	.1922	.3123	.3287	.4664	.4176	.5695			.4350	.6330			.3910	.5077
.20	.1719	.2908	.2885	.4155	.3900	.5230	.4332	.5687	.4559	.5951	.4444	.6276	.4075	.4568
.25					.3596	.4761	.3949	.5263	.4568	.5587	.4549	.5939	.3933	.4276
.30	-.0161	.0074							.4330	.5247	.4336	.5337	.3767	.3955
.40	.0912	.1645	-.0873	-.0795	-.0519	-.0408	-.0347	-.0178	-.0206	-.0147	.3718	.4234	.3451	.3661
.50			-.0419	-.0611	-.0735	-.0485	-.0447	-.0378			-.0450	-.0659	.3058	.2853
.60					-.0675	-.0503	-.0553	-.0380			-.0917	-.1162	-.2392	-.2535
.70	.2467	.2444	.2518	.2342	-.0562	-.0605	-.1048	-.1263	-.2926	-.2930	-.3028	-.3155	-.1772	-.1857
.80	-.0890	-.0275	-.0854	-.1015			-.2988	-.2856	-.3058	-.2982	-.2954	-.2883	-.2328	-.2443
.90	-.0359	-.0365	-.1438	-.1272	-.2111	-.2386	-.2760	-.2486	-.2743	-.2595	-.2663	-.2721	-.3618	-.3222
.95	-.0213	-.0253	-.1378	-.1200			-.2578	-.2364	-.2711	-.2543	-.2623	-.2706	-.3512	-.3340

TAIL 1

	Cp at y/b of													
	0.02		0.22		0.44		0.56		0.67		0.83		0.98	
x/c	U.S.	L.S.	U.S.	L.S.	U.S.	L.S.	U.S.	L.S.	U.S.	L.S.	U.S.	L.S.	U.S.	L.S.
.05	-.1854	.4961	-.2319	.9011			-.2486	.9654			-.2781	1.0025	-.2656	.8398
.10	-.0912	.5700					-.1976	.8788	-.1769	.8801			-.2138	.7494
.15					-.1439	.7671	-.1576	.8010	-.1438	.8268	-.0845	.8459	-.1525	.6241
.20	-.0424	.6243					-.1253	.7271	-.1449	.7599			-.1034	.5388
.25	-.1611	.2519	-.2705	.4573	-.1207	.6123	-.1100	.6485	-.1159	.6871	-.1143	.7205	-.0530	.4571
.30			-.3106	.1217			-.1044	.5257	-.1073	.6067	-.1079	.6586	-.0383	.4073
.40	-.0743	.5585							-.3036	.0735	-.1065	.4527	-.0377	.3078
.50					-.3231	.4093	-.3179	.2574	-.3162	.1902	-.2997	.0451	-.0629	.1157
.60	-.0908	.3319	-.1700	.3679			-.3246	.4353	-.3175	.3481	-.3409	-.0147	-.3798	-.3254
.70					-.3226	.3492	-.3811	.0639	-.3304	-.0056	-.3389	-.1457	-.3713	-.3189
.80	-.2418	-.0586	-.3347	-.0921	-.3627	-.0455	-.3560	-.0545			-.3512	-.1109		
.90	-.2771	-.0435	-.2839	-.0871	-.3479	-.0902	-.3276	-.0744	-.3133	-.0721	-.3512	-.1089	-.4429	-.2556
.95			-.1811	-.1118	-.3041	-.0947	-.3137	-.0858	-.3178	-.0953	-.3424	-.1203	-.4358	-.2499

TAIL 2

TABLE I. - CONTINUED

(I) α = 12.66°

	Cp at y/b of													
	0.02		0.22		0.44		0.56		0.67		0.83		0.98	
x/c	U.S.	L.S.	U.S.	L.S.	U.S.	L.S.	U.S.	L.S.	U.S.	L.S.	U.S.	L.S.	U.S.	L.S.
.05	.2608	.4319	.4152	.5116	.4071	.7672	.3820	.7744	.2609	.6554				.5439
.10	.2395	.3417	.3830	.5678	.4813	.6495			.4198	.7384	.4995	.7546	.1918	.6472
.15	.1981	.3427	.3514	.4817	.4518	.5914			.4602	.6598			.4097	.5283
.20	.1800	.3133	.3150	.4283	.4184	.5434	.4508	.5931	.4761	.6192	.4669	.6431	.4223	.4815
.25					.3925	.4990	.4050	.5488	.4787	.5839	.4748	.6073	.4080	.4552
.30	-.0015	.0143							.4530	.5460	.4506	.5447	.3956	.4232
.40	.1337	.1638	-.0728	-.0737	-.0507	-.0307	-.0230	-.0066	-.0225	-.0046	.3894	.4364	.3650	.3959
.50			-.0281	-.0556	-.0642	-.0371	-.0367	-.0292			-.0367	-.0551	.3253	.3133
.60					-.0569	-.0413	-.0495	-.0308			-.0861	-.1102	-.2299	-.2457
.70	.2816	.2863	.2845	.2620	-.0509	-.0551	-.0923	-.1210	-.2882	-.2911	-.3000	-.3102	-.1762	-.1710
.80	-.0565	-.0026	-.0673	-.0868			-.2941	-.2703	-.2977	-.2873	-.2924	-.2790	-.2598	-.2305
.90	-.0089	-.0066	-.1216	-.0971	-.2086	-.2341	-.2711	-.2423	-.2670	-.2525	-.2640	-.2650	-.3720	-.3316
.95	.0159	.0093	-.1036	-.0941			-.2514	-.2270	-.2630	-.2474	-.2597	-.2643	-.3552	-.3458

TAIL 1

	Cp at y/b of													
	0.02		0.22		0.44		0.56		0.67		0.83		0.98	
x/c	U.S.	L.S.	U.S.	L.S.	U.S.	L.S.	U.S.	L.S.	U.S.	L.S.	U.S.	L.S.	U.S.	L.S.
.05	-.2734	.5190	-.3050	.9584			-.3228	1.0061			-.3346	1.0337	-.3265	.8695
.10	-.1519	.6315					-.2772	.9249	-.2739	.9280			-.2889	.7819
.15					-.2208	.8086	-.2406	.8469	-.2183	.8714	-.1593	.8679	-.2353	.6555
.20	-.0741	.7007					-.2142	.7696	-.2063	.7994			-.1805	.5695
.25	-.1816	.3160	-.3171	.4852	-.2023	.6445	-.1927	.6874	-.1880	.7221	-.1884	.7528	-.1269	.4858
.30			-.3401	.2233			-.1785	.5571	-.1802	.6354	-.1813	.6868	-.1123	.4352
.40	-.1069	.6345							-.3446	.2225	-.1813	.4755	-.1011	.3335
.50					-.3637	.5088	-.3576	.5474	-.3583	.3834	-.3507	.1799	-.1211	.1382
.60	-.1095	.3755	-.1947	.4196			-.3628	.4685	-.3593	.4630	-.3334	.2131	-.3751	-.2953
.70					-.3434	.3847	-.3936	.0858	-.3488	-.0002	-.3285	-.0493	-.3649	-.2430
.80	-.2565	-.0213	-.3524	-.0394	-.3770	-.0278	-.3727	-.0351			-.3348	-.0821		
.90	-.2995	-.0009	-.2641	-.0580	-.3422	-.0678	-.3525	-.0505	-.3257	-.0575	-.3395	-.0946	-.4072	-.1792
.95			-.1930	-.0942	-.2902	-.0739	-.3290	-.0618	-.3265	-.0817	-.3378	-.1050	-.4014	-.1939

TAIL 2 •

L PAGE IS
QUALITY

TABLE 1. - CONTINUED
(j) α = 16.66°

	Cp at y/b of													
	0.02		0.22		0.44		0.56		0.67		0.83		0.98	
x/c	U.S.	L.S.	U.S.	L.S.	U.S.	L.S.	U.S.	L.S.	U.S.	L.S.	U.S.	L.S.	U.S.	L.S.
.05	.3132	.4981	.4842	.5734	.4624	.8327	.4146	.8344	.2880	.7101				.4953
.10	.2940	.3886	.4346	.6167	.5268	.7117			.4635	.7853	.5111	.7837	.3067	.3600
.15	.2525	.3843	.3966	.5296	.4908	.6446			.5150	.7119			.3880	.5583
.20	.2290	.3510	.3582	.4774	.4580	.5931	.4846	.6391	.5280	.6631	.4897	.6661	.4061	.5107
.25					.4474	.5459	.4436	.5953	.5219	.6201	.4879	.6291	.3997	.4919
.30	.0363	.0556							.4775	.5802	.4545	.5615	.3971	.4677
.40	.2337	.2095	-.0217	-.0536	-.0235	-.0126	.0030	.0117	-.0137	.0088	.4012	.4601	.3861	.4404
.50			.0097	-.0132	-.0367	-.0195	-.0255	-.0147			-.0217	-.0370	.3585	.3617
.60					-.0378	-.0253	-.0379	-.0196			-.0676	-.0949	-.1893	-.2216
.70	.3603	.3599	.3510	.3260	-.0335	-.0426	-.0872	-.1127	-.2797	-.2689	-.2851	-.2482	-.1789	-.1485
.80	-.0244	.0473	-.0557	-.0456			-.2808	-.2051	-.2355	-.2209	-.2502	-.2358	-.3368	-.1966
.90	.0410	.0437	-.0918	-.0539	-.1979	-.1951	-.2307	-.1886	-.2262	-.2097	-.2380	-.2418	-.3735	-.3379
.95	.0786	.0613	-.0646	-.0496			-.1687	-.1575	-.1933	-.1829	-.2166	-.2412	-.3600	-.3500

TAIL 1

	Cp at y/b of													
	0.02		0.22		0.44		0.56		0.67		0.83		0.98	
x/c	U.S.	L.S.	U.S.	L.S.	U.S.	L.S.	U.S.	L.S.	U.S.	L.S.	U.S.	L.S.	U.S.	L.S.
.05	-.3704	.4771	-.4162	1.0422			-.4249	1.0909			-.4056	1.0945	-.4150	.9353
.10	-.2023	.7004					-.4030	1.0209	-.4075	1.0121			-.4142	.8475
.15					-.3550	.9004	-.3665	.9489	-.3658	.9625	-.2425	.9422	-.3836	.7275
.20	-.1333	.8087					-.3391	.8746	-.3313	.8956			-.3438	.6450
.25	-.2074	.4335	-.3907	.5452	-.3201	.7488	-.3230	.7956	-.3093	.8235	-.3214	.8519	-.2821	.5562
.30			-.4000	.4524			-.3104	.6767	-.3002	.7450	-.3071	.7892	-.2730	.5115
.40	-.1739	.7632							-.4243	.4834	-.2988	.5845	-.2617	.4107
.50					-.4205	.5883	-.4284	.6093	-.4297	.5673	-.3989	.4311	-.2640	.2161
.60	-.1611	.4752	-.2494	.5110			-.4289	.5645	-.4208	.5412	-.3678	.2836	-.4604	-.1530
.70					-.3810	.4625	-.4143	.1286	-.4020	.0354	-.3623	-.0090	-.4548	-.1507
.80	-.2802	.0625	-.3694	.0297	-.4159	.0117	-.4075	.0094			-.3643	-.0337		
.90	-.3379	.0673	-.3174	-.0132	-.3376	-.0017	-.3895	-.0048	-.3616	-.0125	-.3573	-.0433	-.4328	-.1561
.95			-.2632	-.0573	-.3230	.0015	-.3598	-.0113	-.3593	-.0301	-.3635	-.0549	-.4199	-.1741

TAIL 2

TABLE I. - CONCLUDED

(k) α = 18.76°

	Cp at y/b of													
	0.02		0.22		0.44		0.56		0.67		0.83		0.98	
x/c	U.S.	L.S.	U.S.	L.S.	U.S.	L.S.	U.S.	L.S.	U.S.	L.S.	U.S.	L.S.	U.S.	L.S.
.05	.3381	.5363	.5153	.6322	.4927	.8603	.4363	.8666	.2990	.7418				.5170
.10	.3126	.4175	.4621	.6484	.5627	.7409			.4762	.8105	.5093	.8070	.2109	.6843
.15	.2715	.4197	.4235	.5590	.5196	.6756			.5293	.7377			.4133	.5886
.20	.2486	.3821	.3835	.5065	.4888	.5265	.4942	.6670	.5416	.6940	.4918	.6863	.4319	.5472
.25					.4606	.5756	.4556	.6208	.5376	.6462	.4946	.6482	.4278	.5266
.30	.0605	.0807							.4909	.6000	.4694	.5791	.4323	.5039
.40	.2980	.2424	.0112	-.0342	-.0235	-.0018	.0071	.0223	.0100	.0161	.4250	.4766	.4209	.4778
.50			.0322	.0172	-.0302	-.0092	-.0198	-.0050			-.0110	-.0237	.3855	.3968
.60					-.0310	-.0167	-.0276	-.0138			-.0510	-.0857	-.1943	-.2054
.70	.3757	.4019	.3736	.3497	-.0310	-.0349	-.0807	-.1096	-.2382	-.1729	-.2583	-.2113	-.1807	-.1347
.80	-.0057	.0725	-.0459	-.0327			-.2469	-.1652	-.2040	-.1737	-.2294	-.2109	-.3735	-.1945
.90	.0758	.0676	-.0659	-.0363	-.1531	-.1568	-.1926	-.1488	-.1804	-.1583	-.2157	-.2127	-.3760	-.3381
.95	.1056	.0914	-.0143	-.0145			-.1375	-.1164	-.1469	-.1300	-.1755	-.1883	-.3682	-.3441

TAIL 1

	Cp at y/b of													
	0.02		0.22		0.44		0.56		0.67		0.83		0.98	
x/c	U.S.	L.S.	U.S.	L.S.	U.S.	L.S.	U.S.	L.S.	U.S.	L.S.	U.S.	L.S.	U.S.	L.S.
.05	-.3998	.3793	-.4557	1.0815			-.4604	1.1139			-.4419	1.1031	-.4443	.9474
.10	-.2158	.5764					-.4466	1.0557	-.4504	1.0503			-.4485	.8711
.15					-.4093	.9490	-.4174	.9889	-.4262	1.0052	-.3239	.9974	-.4403	.7605
.20	-.1551	.8258					-.3907	.9213	-.3966	.9428			-.4122	.6789
.25	-.2259	.4891	-.4117	.6262	-.3755	.8080	-.3759	.8482	-.3709	.8760	-.3890	.8845	-.3670	.5944
.30			-.4188	.5704			-.3657	.7391	-.3578	.8009	-.3751	.8241	-.3461	.5526
.40	-.1961	.7988							-.4502	.5672	-.3588	.6348	-.3450	.4526
.50					-.4287	.6455	-.4358	.6432	-.4382	.6163	-.3755	.5038	-.3522	.2687
.60	-.1751	.5323	-.2782	.5717			-.4266	.6079	-.4215	.5826	-.3677	.3060	-.4616	-.1223
.70					-.4186	.5028	-.4197	.1481	-.4055	.0540	-.3676	.0138	-.4571	-.1244
.80	-.2935	.0806	-.3893	.0388	-.4387	.0405	-.4039	.0328			-.3735	-.0041		
.90	-.3515	.0889	-.3510	-.0062	-.4031	.0255	-.3697	.0250	-.3685	.0178	-.3695	-.0126	-.4392	-.1241
.95			-.3092	-.0505	-.3992	.0267	-.3642	.0177	-.3634	-.0013	-.3721	-.0234	-.4225	-.1430

TAIL 2

TABLE II. - PRESSURE COEFFICIENTS, Φ = 22.5°, δ = 0°, M = 1.50
(a) α = -3.26°

	Cp at y/b of													
	0.02		0.22		0.44		0.56		0.67		0.83		0.98	
x/c	U.S.	L.S.	U.S.	L.S.	U.S.	L.S.	U.S.	L.S.	U.S.	L.S.	U.S.	L.S.	U.S.	L.S.
.05	.1195	.1862	.3969	.3004	.4704	.4554	.5165	.4817	[illegible]	.4155				.3855
.10	.1256	.1782	.3247	.3077	.4725	.4039			.4495	.4853	.5099	.5015	.5142	.4936
.15	.1255	.1702	.2854	.2720	.3737	.3709			.4013	.4351			.3865	.3840
.20	.1021	.1448	.2520	.2565	.3458	.3330	.4018	.3863	.4009	.4136	.4418	.4403	.3423	.3371
.25					.3124	.3035	.3708	.3379	.3968	.3765	.4072	.4135	.2857	.2965
.30	.0503	.0443							.3590	.3444	.3779	.3933	.2998	.2575
.40	.0786	.0437	-.0700	-.1102	-.0703	-.1065	-.0758	-.0945	-.0669	-.0914	.3179	.3215	.2022	.2354
.50			.0347	-.0260	-.0723	-.1052	-.0745	-.1049			-.0853	-.1045	.1334	.1505
.60					-.0530	-.1117	-.0647	-.0806			-.1124	-.1486	-.3094	-.3168
.70	.0197	-.0316	.0519	-.0161	-.0364	-.0945	-.0975	-.1675	-.3000	-.3217	-.3162	-.3332	-.3145	-.3279
.80	-.2199	-.2146	-.2240	-.2617			-.2864	-.3266	-.3068	-.3308	-.3185	-.3139	-.2493	-.2587
.90	-.1867	-.2224	-.2609	-.2957	-.2253	-.2811	-.2668	-.3024	-.3025	-.2987	-.2883	-.2946	-.2533	-.2691
.95	-.1859	-.2111	-.2686	-.2757			-.2554	-.2805	-.2885	-.2859	-.2833	-.2921	-.2160	-.2765

TAIL 1

	Cp at y/b of													
	0.02		0.22		0.44		0.56		0.67		0.83		0.98	
x/c	U.S.	L.S.	U.S.	L.S.	U.S.	L.S.	U.S.	L.S.	U.S.	L.S.	U.S.	L.S.	U.S.	L.S.
.05	.3385	.1462	.5805	.2081			.7398	.2398			.7148	.1859	.7139	.1323
.10	.3363	.1164					.6557	.3233	.6661	.3027			.5794	.2441
.15					.5501	.2753	.6034	.3169	.5326	.3415	.2590	.5762	.4952	.2945
.20	.3045	.0927					.5524	.2956	.5582	.3255			.4295	.2892
.25	.0336	-.0879	.0765	.1374	.4590	.2404	.5110	.2756	.5410	.3057	.5736	.3440	.3814	.2615
.30			-.0538	-.1489			.4554	.2337	.4959	.2853	.5398	.3235	.3394	.2390
.40	.1901	-.0237							-.0361	-.1030	.4060	.2457	.2861	.2041
.50					-.0133	-.1345	-.0174	-.1254	-.0345	-.1307	-.0672	-.1252	.1730	.0875
.60	.1873	-.0333	.1864	-.0720			-.0154	-.1404	-.0268	-.1351	-.1458	-.2170	-.3131	-.3015
.70					-.1202	-.1526	-.1658	-.2767	-.2607	-.3237	-.3120	-.3493	-.3324	-.3415
.80	-.0994	-.2134	-.1460	-.2572	-.1429	-.3319	-.2385	-.3400			-.3204	-.3102		
.90	-.1199	-.2077	-.1879	-.2920	-.1687	-.3013	-.2010	-.3039	-.2815	-.2905	-.3172	-.3064	-.2866	-.3527
.95			-.2071	-.2579	-.1754	-.2849	-.1838	-.2869	-.2881	-.3012	-.2840	-.3050	-.2579	-.3632

TAIL 2

TABLE II. - CONTINUED

(b) α = -1.25°

	Cp at y/b of													
	0.02		0.22		0.44		0.56		0.67		0.83		0.98	
x/c	U.S.	L.S.	U.S.	L.S.	U.S.	L.S.	U.S.	L.S.	U.S.	L.S.	U.S.	L.S.	U.S.	L.S.
.05	.1551	.1862	.3951	.3707	.4298	.5311	.4739	.5676	.3653	.4947				.5304
.10	.1560	.1755	.3324	.3758	.3993	.4650			.4235	.5465	.4934	.5743	.5404	.5273
.15	.1573	.1744	.2924	.3291	.3540	.4184			.3761	.4961			.3797	.4352
.20	.1351	.1555	.2597	.3070	.3302	.3854	.3897	.4125	.3864	.4604	.4175	.4837	.3368	.3456
.25					.3031	.3516	.3608	.3879	.3873	.4153	.3841	.4670	.2824	.3027
.30	.0438	.0586							.3555	.3843	.3735	.4335	.2467	.2545
.40	.0769	.0850	-.0895	-.1065	-.0730	-.0914	-.0785	-.0770	-.0671	-.0752	.3211	.3510	.2131	.2224
.50			-.0202	-.0316	-.0819	-.0941	-.0792	-.0903			-.0916	-.0922	.1545	.1375
.60					-.0706	-.0847	-.0726	-.0821			-.1178	-.1416	-.2983	-.3203
.70	.0311	.0078	.0554	.0220	-.0494	-.0786	-.1099	-.1547	-.3012	-.3077	-.3217	-.3321	-.3013	-.3250
.80	-.2112	-.1841	-.2183	-.2337			-.2974	-.3093	-.3123	-.3182	-.3251	-.3139	-.2501	-.2754
.90	-.1904	-.1967	-.2501	-.2678	-.2249	-.2564	-.2913	-.2808	-.3094	-.3020	-.2926	-.2942	-.2524	-.2772
.95	-.1803	-.1978	-.2588	-.2643			-.2735	-.2708	-.2889	-.2836	-.2969	-.2933	-.2570	-.2821

TAIL 1

	Cp at y/b of													
	0.02		0.22		0.44		0.56		0.67		0.83		0.98	
x/c	U.S.	L.S.	U.S.	L.S.	U.S.	L.S.	U.S.	L.S.	U.S.	L.S.	U.S.	L.S.	U.S.	L.S.
.05	.2469	.1939	.4547	.3397			.6544	.4649			.5889	.4573	.6345	.3931
.10	.2525	.1740					.5608	.4437	.5717	.4426			.5139	.4064
.15					.4723	.3660	.5172	.4079	.5439	.4350	.5119	.4683	.4409	.3594
.20	.2208	.1369					.4774	.3777	.4853	.4100			.3847	.3158
.25	-.0009	-.0438	.0438	.1950	.3960	.3126	.4445	.3505	.4725	.3836	.5166	.4154	.3525	.2764
.30			-.0862	-.1148			.4007	.2948	.4430	.3502	.4886	.3999	.3200	.2543
.40	.1240	.0467							-.0563	-.0719	.3742	.2916	.2741	.2104
.50					-.0545	-.0986	-.0532	-.0899	-.0636	-.0957	-.0850	-.1068	.1650	.0819
.60	.1157	.0048	.1112	.0041			-.0567	-.1035	-.0622	-.1003	-.1651	-.2025	-.3114	-.3011
.70					-.0334	-.1115	-.2012	-.2531	-.2840	-.3052	-.3281	-.3287	-.3369	-.2614
.80	-.1269	-.1932	-.1814	-.2374	-.2141	-.3049	-.2930	-.2792			-.3039	-.2903		
.90	-.1492	-.1910	-.2145	-.2647	-.2099	-.2750	-.2819	-.2652	-.2820	-.2663	-.2950	-.2905	-.2707	-.3139
.95			-.2279	-.2470	-.2089	-.2591	-.2664	-.2639	-.2767	-.2752	-.2845	-.2920	-.2717	-.3065

TAIL 2

TABLE II. - CONTINUED

(c) $\alpha = 0.78°$

	C_p at y/b of													
	0.02		0.22		0.44		0.56		0.67		0.83		0.98	
x/c	U.S.	L.S.	U.S.	L.S.	U.S.	L.S.	U.S.	L.S.	U.S.	L.S.	U.S.	L.S.	U.S.	L.S.
.05	.1622	.2379	.3579	.4337	.3563	.5917	.3479	.6352	.2567	.5704				.6034
.10	.1513	.2123	.3144	.4324	.3743	.5161			.3899	.6043	.4393	.6439	.4684	.5647
.15	.1534	.2170	.2763	.3841	.3284	.4656			.3508	.5467			.3617	.4402
.20	.1466	.2024	.2482	.3511	.3050	.4312	.3660	.4599	.3545	.5044	.3930	.5363	.3336	.3802
.25					.2812	.3935	.3416	.4364	.3577	.4556	.3607	.5203	.2897	.3293
.30	.0235	.0464							.3404	.4292	.3527	.4737	.2535	.2896
.40	.0675	.1417	-.0973	-.0817	-.0797	-.0733	-.0855	-.0606	-.0640	-.0569	.3122	.3752	.2237	.2449
.50			-.0531	-.0081	-.0921	-.0732	-.0858	-.0715			-.0916	-.0801	.1733	.1581
.60					-.0894	-.0638	-.0810	-.0612			-.1239	-.1317	-.2835	-.3124
.70	.0458	.0529	.0592	.0685	-.0651	-.0514	-.1169	-.1349	-.3069	-.2956	-.3244	-.3250	-.2555	-.3077
.80	-.2041	-.1488	-.2043	-.2044			-.3081	-.2954	-.3186	-.3070	-.3186	-.3163	-.2617	-.2742
.90	-.1722	-.1760	-.2397	-.2350	-.2391	-.2309	-.3018	-.2708	-.3076	-.3026	-.2903	-.2883	-.2814	-.2778
.95	-.1718	-.1839	-.2474	-.2381			-.2752	-.2560	-.2841	-.2829	-.2868	-.2834	-.2860	-.2915

TAIL 1

	C_p at y/b of													
	0.02		0.22		0.44		0.56		0.67		0.83		0.98	
x/c	U.S.	L.S.	U.S.	L.S.	U.S.	L.S.	U.S.	L.S.	U.S.	L.S.	U.S.	L.S.	U.S.	L.S.
.05	.1736	.2235	.3315	.4652			.4410	.5999			.4340	.6534	.4374	.5302
.10	.1849	.2117					.4752	.5329	.4763	.5401			.4410	.4722
.15					.3895	.4408	.4292	.4866	.4527	.5232	.5026	.5283	.3840	.4010
.20	.1558	.1846					.3978	.4481	.4130	.4852			.3421	.3448
.25	-.0211	-.0123	.0114	.2516	.3276	.3743	.3731	.4128	.3978	.4478	.4384	.4890	.3139	.2962
.30			-.1193	-.0853			.3419	.3460	.3769	.4056	.4203	.4589	.2838	.2653
.40	.0603	.1290							-.0780	-.0499	.3354	.3220	.2522	.2132
.50					-.0915	-.0639	-.0878	-.0570	-.0948	-.0673	-.0997	-.0901	.1552	.0711
.60	.0541	.0336	.0358	.0704			-.0948	-.0675	-.0958	-.0658	-.1794	-.1856	-.3137	-.3052
.70					-.0976	-.0632	-.2316	-.2271	-.3053	-.2818	-.3396	-.3252	-.3355	-.2772
.80	-.1615	-.1798	-.2210	-.2144	-.2839	-.2670	-.3203	-.2965			-.3065	-.2952		
.90	-.1729	-.1735	-.2475	-.2395	-.2695	-.2457	-.2962	-.2758	-.2793	-.2749	-.2954	-.2819	-.2957	-.2631
.95			-.2463	-.2340	-.2558	-.2278	-.2779	-.2604	-.2866	-.2737	-.2943	-.2796	-.2791	-.2538

TAIL 2

TABLE II.- CONTINUED

(d) β = 2.[illegible]°

	Cp at y/b of													
	0.02		0.22		0.44		0.56		0.67		0.83		0.98	
x/c	U.S.	L.S.	U.S.	L.S.	U.S.	L.S.	U.S.	L.S.	U.S.	L.S.	U.S.	L.S.	U.S.	L.S.
.05	.1532	.3074	.2971	.5035	.2481	.6509	.2297	.7013	.1441	.6450				.6735
.10	.1374	.2807	.2812	.1352	.3466	.5744			.1280	.6608	.3586	.5965	[illegible]	.5013
.15	.1233	.2659	.2310	.4345	.3380	.5544			.3158	.5962			.2542	[illegible]
.20	.1337	.2331	.2202	[illegible]	.1836	.4781	.3396	.5110	.3410	.5510	.3630	.5997	[illegible]	[illegible]
.25					.2617	.4351	.3196	.4822	.3465	.5069	.3343	.5633	[illegible]	.3545
.30	-.1162	.3166							.3220	.4775	.3334	.5097	.2759	.3134
.40	.0464	.1985	-.1057	-.0626	-.1919	-.0503	-.0947	-.0446	-.1541	-.0370	.2951	.3914	[illegible]	.2875
.50			-.0738	.0142	-.1079	-.0555	-.0972	-.0515			-.0930	-.0708	.1924	.1775
.60					-.1104	-.0472	-.0946	-.0429			-.1321	[illegible]	-.2924	[illegible]
.70	.0658	.1100	.0654	.1276	-.0891	-.0296	-.1317	-.1160	-.3132	-.2664	-.3258	-.3188	[illegible]	-.2963
.80	-.1952	-.1070	-.1813	-.1682			-.3207	-.2844	-.3272	-.2992	-.3140	-.3155	[illegible]	-.2714
.90	-.1509	-.1511	-.2285	-.2035	-.2606	-.1907	-.2999	-.2634	-.3004	-.2991	-.2900	-.2862	-.3197	-.2789
.95	-.1585	-.1628	-.2374	-.2118			-.2762	-.2451	-.2957	-.2821	-.2881	-.2789	-.3317	-.2919

TAIL 1

	Cp at y/b of													
	0.02		0.22		0.44		0.56		0.67		0.83		0.98	
x/c	U.S.	L.S.	U.S.	L.S.	U.S.	L.S.	U.S.	L.S.	U.S.	L.S.	U.S.	L.S.	U.S.	L.S.
.05	.1233	.2445	.2037	.5486			.1787	.6856			.1766	.7570	.1365	.6113
.10	.1347	.2460					.3504	.5081	.5100	.6202			.2439	.5301
.15					.2907	.5095	.3372	.5650	.3401	.5317	.4260	.6013	[illegible]	.4397
.20	.1010	.2241					.3156	[illegible]	.3338	.5449			.3142	.3662
.25	-.0364	.0202	-.0386	.2927	.2517	.4252	.3007	.4660	.3234	.4973	.3570	.5415	.2930	.3084
.30			-.1509	-.0568			.2730	.3856	.3045	.4452	.3461	.5000	[illegible]	.2634
.40	.0295	.2001							-.1092	-.0348	.2820	.3430	.2252	.2037
.50					-.1307	-.0273	-.1237	-.0262	-.1290	-.0396	-.1192	-.0732	[illegible]	.0578
.60	.0097	.0769	-.0170	.1237			-.1344	-.0308	-.1327	-.0332	-.1963	-.1670	[illegible]	-.3105
.70					-.1431	-.0066	-.2599	-.1987	-.3263	-.2593	-.3474	-.3127	[illegible]	-.3050
.80	-.1303	-.1571	-.2619	-.2010	-.3243	-.2050	-.3427	-.2627			-.3162	-.3213		
.90	-.1774	-.1599	-.2840	-.2183	-.3036	-.1956	-.3050	-.2495	-.2917	-.2801	-.3029	-.3008	-.3436	-.2560
.95			-.2573	-.2216	-.2676	-.1913	-.2852	-.2433	-.2986	-.2961	-.3035	-.2876	-.3253	-.2485

TAIL 2

PAGE IS
QUALITY

TABLE II. - CONTINUED

(e) α = 4.75°

	Cp at y/b of													
	0.02		0.22		0.44		0.56		0.67		0.83		0.98	
x/c	U.S.	L.S.	U.S.	L.S.	U.S.	L.S.	U.S.	L.S.	U.S.	L.S.	U.S.	L.S.	U.S.	L.S.
.05	.1339	.3796	.2389	.5630	.1932	.7099	.1696	.7656	.2748	.7277				.7347
.10	.1229	.3103	.2398	.5398	.2962	.6238			.2573	.7143	.2928	.7484	.2497	.6360
.15	.0946	.3206	.2212	.4767	.2718	.5703			.2670	.6434			.2308	.5048
.20	.1035	.3072	.1946	.4293	.2601	.5260	.3123	.5673	.3133	.5986	.2975	.6356	.2688	.4417
.25					.2415	.4771	.2934	.5281	.3232	.5549	.2913	.6028	.2763	.3808
.30	-.0655	.0142							.2980	.5167	.3093	.5429	.2670	.3372
.40	.0194	.2395	-.1378	-.0427	-.1014	-.0342	-.1051	-.0250	-.0762	-.0186	.2808	.4201	.2461	.2893
.50			-.1094	.0351	-.1225	-.0343	-.1086	-.0293			-.0953	-.0620	.2088	.1949
.60					-.1316	-.0267	-.1084	-.0209			-.1385	-.1115	-.2818	-.2993
.70	.0844	.1657	.0715	.1917	-.1252	-.0061	-.1453	-.1002	-.3173	-.2779	-.3291	-.3126	-.2212	-.2915
.80	-.1818	-.0697	-.1669	-.1382			-.3333	-.2740	-.3333	-.2920	-.3092	-.3160	-.2479	-.2631
.90	-.1446	-.1206	-.2191	-.1773	-.2771	-.1510	-.2958	-.2553	-.2945	-.2968	-.2901	-.2832	-.3404	-.2765
.95	-.1378	-.1341	-.2278	-.1840			-.2664	-.2387	-.2866	-.2815	-.2823	-.2755	-.3544	-.2843

TAIL 1

	Cp at y/b of													
	0.02		0.22		0.44		0.56		0.67		0.83		0.98	
x/c	U.S.	L.S.	U.S.	L.S.	U.S.	L.S.	U.S.	L.S.	U.S.	L.S.	U.S.	L.S.	U.S.	L.S.
.05	.0769	.2676	.0895	.6250			.0441	.7533			-.0000	.8183	-.0217	.6679
.10	.0855	.2849					.1511	.6764	.1509	.6856			.0936	.5833
.15					.1703	.5705	.2099	.6181	.1899	.6468	.2785	.6567	.1464	.4785
.20	.0595	.2781					.2042	.5656	.2013	.5923			.1663	.3971
.25	-.0499	.0518	-.0842	.3364	.1692	.4715	.2058	.5077	.2192	.5373	.2299	.5768	.1734	.3338
.30			-.1952	-.0250			.1923	.4128	.2183	.4753	.2293	.5277	.1769	.2895
.40	.0135	.2672							-.1435	-.0189	.2351	.3606	.1796	.2142
.50					-.1692	.0175	-.1633	.0084	-.1651	-.0105	-.1581	-.0560	.1207	.0527
.60	-.0201	.1195	-.0459	.1839			-.1749	.0166	-.1695	.0023	-.2281	-.1445	-.3175	-.3180
.70					-.1818	.0953	-.2877	-.1555	-.3489	-.2355	-.3567	-.2928	-.2659	-.3227
.80	-.2094	-.1545	-.2822	-.1860	-.3440	-.1476	-.3518	-.2068			-.3224	-.2997		
.90	-.1920	-.1493	-.3018	-.2074	-.3156	-.1714	-.3193	-.1851	-.3086	-.2437	-.3126	-.2981	-.3216	-.2418
.95			-.2507	-.2051	-.2764	-.1744	-.2885	-.1807	-.3092	-.2540	-.3086	-.2926	-.3445	-.2341

TAIL 2

TABLE II. - CONTINUED

(f) α = 5.75°

	Cp at y/b of													
	0.02		0.22		0.44		0.56		0.67		0.83		0.98	
x/c	U.S.	L.S.	U.S.	L.S.	U.S.	L.S.	U.S.	L.S.	U.S.	L.S.	U.S.	L.S.	U.S.	L.S.
.05	.1087	.4561	.1975	.6255	.1384	.7722	.1255	.3354	.2213	.8135				.7860
.10	.1047	.3710	.1977	.5942	.2488	.6838			.2147	.7712	.2478	.7954	.2112	.6720
.15	.0760	.3818	.1834	.5281	.2405	.6254			.2091	.7000			.2134	.5406
.20	.0830	.3619	.1365	.4778	.2379	.5753	.2835	.6222	.2751	.6526	.2347	.5819	.2415	.4751
.25					.2201	.5214	.2633	.5721	.2829	.6033	.2386	[illegible]	[illegible]	[illegible]
.30	-.0993	.0445							.2694	.5571	.2583	.5745	[illegible]	.3577
.40	-.0180	.2794	-.1800	-.0135	-.1123	-.0129	-.1174	-.0058	-.0852	-.0024	.2521	.4413	.2340	.3144
.50			-.1311	.0738	-.1349	-.0109	-.1214	-.0058			-.1022	-.0522	.2211	.2153
.60					-.1449	-.0025	-.1209	.0013			-.1406	-.1021	-.2775	-.2913
.70	.1048	.2214	.0703	.2473	-.1438	.0435	-.1573	-.0817	-.3237	-.2678	-.3332	-.3050	-.2347	-.2931
.80	-.1656	-.0359	-.1593	-.1105			-.3383	-.2574	-.3314	-.2836	-.3089	-.3102	-.2944	-.2459
.90	-.1281	-.0860	-.2111	-.1494	-.2837	-.1258	-.2966	-.2319	-.2972	-.2876	-.2931	-.2795	-.3735	-.2565
.95	-.1116	-.1006	-.2143	-.1517			-.2602	-.2112	-.2941	-.2742	-.2913	-.2587	-.3610	-.2761

TAIL 1

	Cp at y/b of													
	0.02		0.22		0.44		0.56		0.67		0.83		0.98	
x/c	U.S.	L.S.	U.S.	L.S.	U.S.	L.S.	U.S.	L.S.	U.S.	L.S.	U.S.	L.S.	U.S.	L.S.
.05	.0339	.2769	-.0239	.6949			-.0702	.8127			-.1121	.8579	-.1244	.7199
.10	.0474	.3087					.0155	.7316	.0285	.7344			-.0151	.6385
.15					.0574	.5253	.0637	.6650	.0586	.6895	.1230	.7002	.0450	.5236
.20	.0332	.3291					.0916	.6025	.0733	.6317			.0778	.4401
.25	-.0400	.0845	-.1263	.3729	.0692	.5080	.0975	.5399	.0941	.5696	.0882	.6037	.0889	.3695
.30			-.2179	.0042			.0906	.4344	.0993	.5001	.1010	.5531	.0919	.3225
.40	.0036	.3363							-.1857	-.0045	.0939	.3799	.0950	.2356
.50					-.2082	.0793	-.2121	.0521	-.2146	.0196	-.2042	-.0309	.0571	.0622
.60	-.0436	.1654	-.0734	.2221			-.2166	.0795	-.2208	.0446	-.2618	-.1120	-.3377	-.3246
.70					-.1959	.1887	-.3163	-.0898	-.3749	-.2003	-.3563	-.2625	-.3063	-.3071
.80	-.2233	-.1376	-.2994	-.1721	-.3414	-.1242	-.3483	-.1417			-.3381	-.2707		
.90	-.2290	-.1362	-.2983	-.1960	-.3256	-.1603	-.3265	-.1443	-.3238	-.1779	-.3262	-.2719	-.3559	-.2735
.95			-.2369	-.1931	-.2840	-.1667	-.2947	-.1515	-.3157	-.1801	-.3178	-.2756	-.3337	-.2512

TAIL 2

TABLE II. - CONTINUED

(g) α = 8.75°

	Cp at y/b of													
	0.02		0.22		0.44		0.56		0.67		0.83		0.98	
x/c	U.S.	L.S.	U.S.	L.S.	U.S.	L.S.	U.S.	L.S.	U.S.	L.S.	U.S.	L.S.	U.S.	L.S.
.05	.0886	.5316	.1468	.6974	.0640	.8491	.0989	.9046	-.0263	.8937				.8337
.10	.0874	.4417	.1550	.6507	.2207	.7517			.1781	.8312	.2033	.8477	-.0158	.7085
.15	.0508	.4496	.1427	.5823	.2162	.6880			.1689	.7552			.1987	.5783
.20	.0537	.4154	.1363	.5316	.2125	.6309	.2560	.6739	.2347	.7013	.1837	.7218	.2222	.5105
.25					.1943	.5643	.2299	.6137	.2572	.6475	.1939	.6785	.2278	.4438
.30	-.1284	.0857							.2413	.5909	.2263	.6009	.2330	.4019
.40	-.0478	.3221	-.1765	.0229	-.1308	.0050	-.1287	.0095	-.1029	.0066	.2211	.4636	.2129	.3472
.50			-.1535	.1363	-.1520	.0110	-.1352	.0107			-.1139	-.0419	.1944	.2414
.60					-.1582	.0348	-.1332	.0198			-.1485	-.0903	-.2707	-.2828
.70	.1189	.2722	.0471	.2965	-.1589	.1532	-.1737	-.0699	-.3353	-.2585	-.3374	-.2967	-.2657	-.2833
.80	-.1564	-.0023	-.1735	-.0764			-.3349	-.2175	-.3261	-.2734	-.3123	-.3033	-.3693	-.2287
.90	-.1103	-.0481	-.2031	-.1136	-.2796	-.1022	-.2936	-.1904	-.3006	-.2715	-.2987	-.2747	-.3886	-.2505
.95	-.0790	-.0639	-.1917	-.1177			-.2476	-.1582	-.2832	-.2670	-.2958	-.2629	-.3663	-.2703

TAIL 1

	Cp at y/b of													
	0.02		0.22		0.44		0.56		0.67		0.83		0.98	
x/c	U.S.	L.S.	U.S.	L.S.	U.S.	L.S.	U.S.	L.S.	U.S.	L.S.	U.S.	L.S.	U.S.	L.S.
.05	.0128	.2617	-.1239	.7482			-.1660	.8569			-.2080	.8905	-.2062	.7631
.10	.0261	.3150					-.1109	.7769	-.0732	.7731			-.1203	.6809
.15					-.0462	.6672	-.0553	.7055	-.0537	.7235	.0004	.7320	-.0553	.5588
.20	.0073	.3656					-.0265	.6376	-.0462	.6582			-.0196	.4722
.25	-.0416	.1200	-.1663	.4040	-.0313	.5344	-.0066	.5670	-.0227	.5912	-.0324	.6433	-.0022	.3955
.30			-.2422	.0408			-.0047	.4534	-.0140	.5163	-.0158	.5896	.0135	.3479
.40	-.0125	.4095							-.2413	.0109	-.0107	.4010	.0235	.2544
.50					-.2511	.1549	-.2656	.1059	-.2658	.0668	-.2543	-.0052	-.0162	.0988
.60	-.0556	.2086	-.0872	.2504			-.2704	.1657	-.2635	.1122	-.3089	-.0777	-.3659	-.3334
.70					-.1810	.2473	-.3510	-.0168	-.3654	-.1382	-.3427	-.2316	-.3391	-.3111
.80	-.2449	-.1169	-.3223	-.1575	-.3347	-.1135	-.3592	-.1081			-.3469	-.2342		
.90	-.2502	-.1224	-.3006	-.1778	-.3331	-.1480	-.3375	-.1135	-.3344	-.1175	-.3424	-.2260	-.3847	-.2903
.95			-.2307	-.1788	-.2757	-.1519	-.3102	-.1309	-.3253	-.1375	-.3353	-.2271	-.3734	-.2983

TAIL 2

TABLE II. - CONTINUED
(h) α = 10.76°

	Cp at y/b of													
	0.02		0.22		0.44		0.56		0.67		0.83		0.98	
x/c	U.S.	L.S.	U.S.	L.S.	U.S.	L.S.	U.S.	L.S.	U.S.	L.S.	U.S.	L.S.	U.S.	L.S.
.05	.0531	.6015	.1034	.7792	.0022	.9152	.0496	.9692	-.0688	.9672				.8783
.10	.0538	.5180	.1250	.7167	.1886	.8135			.1412	.8843	.1660	.8964	-.0500	[illegible]
.15	.0215	.5143	.1163	.6403	.1845	.7397			.1378	.8037			.1553	.6153
.20	.0317	.4667	.1128	.5802	.1828	.6750	.2203	.7144	.2014	.7443	.1594	.7586	.1999	.5451
.25					.1670	.6016	.2016	.6530	.2273	.6851	.1546	.7105	.1930	.4843
.30	-.1402	.1238							.2108	.6252	.1891	.6308	[illegible]	.4357
.40	-.0685	.3722	-.1944	.0793	-.1496	.0240	-.1355	.0294	-.1196	.0139	.1829	.4875	[illegible]	[illegible]
.50			-.1777	.2774	-.1718	.0444	-.1479	.0329			-.1279	-.0292	.1742	.2687
.60					-.1726	.1049	-.1485	.0488			-.1616	-.0738	-.2894	-.2737
.70	.1143	.3367	-.1225	.3650	-.1750	.2597	-.1932	-.0279	-.3415	-.2440	-.3411	-.2848	-.3070	-.2815
.80	-.1477	.0367	-.2056	-.0397			-.3187	-.1719	-.3118	-.2523	-.3112	-.2917	-.4234	-.2105
.90	-.0894	-.0089	-.1893	-.0781	-.2670	-.0708	-.2809	-.1319	-.3023	-.2437	-.3021	-.2719	-.3981	-.2314
.95	-.0409	-.0243	-.1614	-.0867			-.2415	-.1158	-.2805	-.2425	-.2935	-.2533	-.3870	-.2545

TAIL 1

	Cp at y/b of													
	0.02		0.22		0.44		0.56		0.67		0.83		0.98	
x/c	U.S.	L.S.	U.S.	L.S.	U.S.	L.S.	U.S.	L.S.	U.S.	L.S.	U.S.	L.S.	U.S.	L.S.
.05	.0008	.2372	-.2037	.8011			-.2493	.8844			-.2708	.9255	-.2738	.7830
.10	.0045	.3036					-.2053	.8030	-.1680	.7953			-.2209	.7103
.15					-.1338	.7024	-.1636	.7291	-.1505	.7488	-.0653	.7748	-.1601	.5847
.20	-.0174	.3841					-.1295	.6567	-.1469	.6857			-.1100	.4971
.25	-.0591	.1515	-.2072	.4373	-.1152	.5539	-.1105	.5837	-.1207	.6203	-.1221	.6672	-.0803	.4133
.30			-.2588	.0796			-.1007	.4673	-.1121	.5427	-.1147	.6112	-.0574	.3684
.40	-.0245	.4658							-.3019	.0365	-.1042	.4181	-.0441	.2703
.50					-.2865	.2245	-.3126	.1874	-.3118	.1347	-.2955	.0253	-.0731	.0813
.60	-.0532	.2482	-.1095	.2782			-.3144	.3322	-.3135	.2087	-.3330	-.0328	-.3609	-.3330
.70					-.1886	.2849	-.3754	.0271	-.3580	-.0357	-.3234	-.1830	-.3476	-.3273
.80	-.2515	-.0921	-.3196	-.1424	-.3401	-.0922	-.3630	-.0840			-.3354	-.1608		
.90	-.2779	-.1023	-.2959	-.1555	-.3271	-.1244	-.3419	-.1045	-.3390	-.0922	-.3392	-.1382	-.3665	-.2817
.95			-.2378	-.1626	-.2513	-.1303	-.2892	-.1120	-.3310	-.1157	-.3308	-.1413	-.3843	-.2821

TAIL 2

TABLE II. - CONTINUED

(i) α = 12.76°

	C_p at y/b of													
	0.02		0.22		0.44		0.56		0.67		0.83		0.98	
x/c	U.S.	L.S.	U.S.	L.S.	U.S.	L.S.	U.S.	L.S.	U.S.	L.S.	U.S.	L.S.	U.S.	L.S.
.05	.0194	.6708	.0725	.6562	-.0409	.9743	.0124	1.0311	-.1139	1.0190				.9181
.10	.0338	.5890	.0977	.7751	.1703	.9851			.1201	.9353	.1190	.9395	-.0790	.7772
.15	.0103	.5731	.0848	.6979	.1557	.7896			.1209	.8511			.1485	.6609
.20	.0265	.5269	.0766	.6325	.1571	.7315	.1966	.7642	.1733	.7868	.1154	.7942	.1840	.5763
.25					.1424	.9424	.1715	.8954	.1970	.7240	.1155	.7448	.1747	.5188
.30	-.1503	.1846							.1811	.6586	.1511	.6601	.1841	.4697
.40	-.0901	.4433	-.2086	.1350	-.1649	.0520	-.1471	.0531	-.1355	.0354	.1434	.5106	.1931	.4107
.50			-.1954	.3847	-.1383	.1024	-.1642	.0640			-.1421	-.0161	.1635	.2970
.60					-.1897	.1730	-.1642	.0976			-.1706	-.0584	-.3045	-.2331
.70	.1122	.4050	-.1396	.4454	-.1968	.3535	-.2113	.0102	-.3469	-.2272	-.3334	-.2732	-.3644	-.2535
.80	-.1354	.0725	-.2662	-.0152			-.2982	-.1122	-.3026	-.2280	-.3059	-.2776	-.4316	-.1845
.90	-.0742	.0294	-.1702	-.0517	-.2444	-.0352	-.2554	-.0653	-.2821	-.2070	-.2969	-.2542	-.4064	-.2059
.95	-.0126	.0130	-.1318	-.0576			-.2350	-.0696	-.2595	-.2077	-.2755	-.2424	-.3950	-.2387

TAIL 1

	C_p at y/b of													
	0.02		0.22		0.44		0.56		0.67		0.83		0.98	
x/c	U.S.	L.S.	U.S.	L.S.	U.S.	L.S.	U.S.	L.S.	U.S.	L.S.	U.S.	L.S.	U.S.	L.S.
.05	-.0159	.1938	-.2695	.8373			-.3230	.8986			-.3370	.9378	-.3383	.8127
.10	-.0161	.2703					-.2793	.8261	-.2671	.8329			-.3027	.7381
.15					-.2085	.7216	-.2465	.7565	-.2222	.7837	-.1429	.8001	-.2496	.6152
.20	-.0387	.3758					-.2175	.6862	-.2221	.7175			-.2061	.5269
.25	-.0863	.1763	-.2249	.4571	-.1946	.5691	-.1959	.6100	-.1995	.6456	-.2011	.5896	-.1761	.4435
.30			-.2572	.1265			-.1659	.4888	-.1917	.5545	-.1937	.6325	-.1412	.3920
.40	-.0425	.5114							-.3529	.2870	-.1902	.4329	-.1243	.2882
.50					-.3170	.4072	-.3533	.3148	-.3615	.2143	-.3471	.0943	-.1316	.0933
.60	-.0669	.2832	-.1416	.3084			-.3469	.4021	-.3503	.4185	-.3328	.0603	-.3572	-.3255
.70					-.2142	.3142	-.3817	.0497	-.3772	-.0266	-.3321	-.0667	-.3632	-.2947
.80	-.2542	-.0747	-.3299	-.1243	-.3553	-.0717	-.3743	-.0667			-.3357	-.0942		
.90	-.2892	-.0907	-.3147	-.1272	-.3330	-.1049	-.3217	-.0855	-.3507	-.0819	-.3326	-.1125	-.3513	-.3054
.95			-.2640	-.1462	-.2562	-.1110	-.2752	-.0964	-.3361	-.1034	-.3252	-.1249	-.3614	-.2166

TAIL 2

TABLE II. - CONTINUED

(i) α = 15.75°

	Cp at y/b of													
	0.02		0.22		0.44		0.56		0.67		0.83		0.98	
x/c	U.S.	L.S.	U.S.	L.S.	U.S.	L.S.	U.S.	L.S.	U.S.	L.S.	U.S.	L.S.	U.S.	L.S.
.05	.0050	.9164	.0019	1.0153	-.1192	1.0967	-.0600	1.1434	-.1522	1.1321				.9989
.10	.0158	.7679	.0415	.9153	.0995	.9875			.0475	1.0344	.0346	1.0253	-.0567	.8521
.15	-.0070	.7443	.0420	.8310	.0897	.9008			.0669	.9430			.1162	.7290
.20	.0181	.7002	.0303	.7483	.1027	.8131	.1455	.8522	.1197	.8722	.0724	.8884	.1588	.6557
.25					.0915	.7255	.1144	.7743	.1306	.7999	.0801	.8092	.1485	.6002
.30	-.1736	.3501							.1170	.7251	.0939	.7210	.1373	.5485
.40	-.1157	.5495	-.2325	.3467	-.1951	.1520	-.1805	.0973	-.1575	.0655	.0603	.6538	.1465	.4852
.50			-.2272	.5523	-.2221	.2321	-.1971	.1724			-.1383	.0153	.1342	.3557
.60					-.2222	.5041	-.1964	.2161			-.1812	-.0200	-.3250	-.2237
.70	.1017	.5230	-.1872	.5510	-.2281	.4777	-.2353	.2768	-.2587	-.1639	-.2980	-.2426	-.4232	-.2023
.80	-.1379	.1356	-.3383	.0307			-.2222	.0101	-.2478	-.1175	-.3063	-.2241	-.4295	-.1221
.90	-.0631	.0804	-.2405	-.0043	-.1946	-.0017	-.2012	-.0177	-.2341	-.0636	-.2570	-.1960	-.4243	-.1389
.95	.0245	.0658	-.1272	-.0092			-.1966	-.0264	-.2247	-.0501	-.2093	-.1862	-.4112	-.1735

TAIL 1

	Cp at y/b of													
	0.02		0.22		0.44		0.56		0.67		0.83		0.98	
x/c	U.S.	L.S.	U.S.	L.S.	U.S.	L.S.	U.S.	L.S.	U.S.	L.S.	U.S.	L.S.	U.S.	L.S.
.05	-.0129	.1363	-.3628	.8790			-.4231	.9212			-.4112	.9382	-.4089	.8328
.10	-.0314	.1845					-.4117	.8589	-.4165	.8564			-.4036	.7689
.15					-.3460	.7618	-.3796	.7910	-.3832	.8091	-.2389	.8314	-.4020	.6555
.20	-.0567	.2763					-.3545	.7179	-.3558	.7438			-.3825	.5705
.25	-.1510	.1761	-.3198	.4892	-.3201	.6035	-.3389	.6386	-.3366	.6753	-.3418	.7306	-.3557	.4878
.30			-.3117	.2243			-.3272	.5104	-.3309	.6022	-.3296	.5795	-.3176	.4414
.40	-.0979	.5244							-.4237	.3632	-.3228	.4972	-.2954	.3406
.50					-.3430	.4588	-.4076	.4812	-.4383	.4854	-.4314	.3549	-.2969	.1582
.60	-.0857	.3439	-.1900	.3672			-.3582	.4465	-.4278	.4493	-.4129	.2346	-.3969	-.1860
.70					-.2667	.3576	-.4088	.0704	-.4329	-.0025	-.4117	-.0453	-.4095	-.1824
.80	-.2530	-.0290	-.3474	-.0939	-.3725	-.0441	-.4267	-.0365			-.4123	-.0720		
.90	-.2940	-.0611	-.3519	-.0916	-.3486	-.0795	-.3747	-.0542	-.3670	-.0513	-.3685	-.0857	-.4133	-.1937
.95			-.3032	-.1350	-.3102	-.0857	-.3252	-.0661	-.3826	-.0722	-.3823	-.0945	-.3926	-.2142

TAIL 2

TABLE II.- CONCLUDED
(k) α = 18.76°

	Cp at y/b of													
	0.02		0.22		0.44		0.56		0.67		0.83		0.98	
x/c	U.S.	L.S.	U.S.	L.S.	U.S.	L.S.	U.S.	L.S.	U.S.	L.S.	U.S.	L.S.	U.S.	L.S.
.05	-.0045	.9087	-.0405	1.0983	-.1473	1.1522	-.1013	1.1970	-.1836	1.1966				1.0456
.10	.0109	.8815	.0083	.9840	.0422	1.0404			-.0142	1.0817	-.0069	1.0698	-.1076	.8935
.15	-.0057	.8430	.0169	.8906	.0523	.9478			.0264	.9910			.0962	.7722
.20	.0178	.7714	.0094	.7978	.0679	.8616	.1044	.8984	.0946	.9151	.0576	.9050	.1756	.7013
.25					.0568	.7637	.0758	.8121	.1025	.8375	.0763	.8470	.1699	.6462
.30	-.1793	.4563							.0934	.7580	.0942	.7535	.1513	.5952
.40	-.1193	.6035	-.2493	.5604	-.2139	.2256	-.1934	.1375	-.1653	.0848	.0749	.5925	.1330	.5309
.50			-.2458	.6119	-.2352	.4334	-.2033	.2215			-.1681	.0340	.0583	.3949
.60					-.2272	.5646	-.2027	.4158			-.1842	.0030	-.3442	-.2117
.70	.0997	.5592	-.1979	.5804	-.2282	.4960	-.2262	.3078	-.2366	-.0652	-.2912	-.2230	-.4337	-.1400
.80	-.1193	.1579	-.3218	.0502			-.1909	.0112	-.2201	-.0182	-.3004	-.19[illegible]1	-.4275	-.0917
.90	-.0480	.0963	-.2070	.0114	-.1778	.0066	-.1741	-.0038	-.1976	-.0219	-.2315	-.1682	-.4231	-.1005
.95	.0478	.0822	-.1179	.0091			-.1699	-.0098	-.1930	-.0305	-.1832	-.1604	-.4052	-.1382

TAIL 1

	Cp at y/b of													
	0.02		0.22		0.44		0.56		0.67		0.83		0.98	
x/c	U.S.	L.S.	U.S.	L.S.	U.S.	L.S.	U.S.	L.S.	U.S.	L.S.	U.S.	L.S.	U.S.	L.S.
.05	-.0109	.1308	-.3966	.9084			-.4590	.9162			-.4379	.9263	-.4303	.8305
.10	-.0405	.1771					-.4557	.8636	-.4552	.8653			-.4316	.7844
.15					-.4021	.7703	-.4366	.8009	-.4423	.8279	-.3147	.8438	-.4306	.6814
.20	-.0688	.2437					-.4118	.7366	-.4209	.7732			-.4302	.6017
.25	-.1681	.1654	-.3275	.5113	-.3586	.6117	-.3948	.6731	-.3966	.7114	-.4171	.7502	-.4206	.5198
.30			-.3130	.2877			-.3852	.5831	-.3842	.6414	-.4075	.7009	-.3943	.4786
.40	-.1122	.5192							-.4548	.4366	-.3888	.5362	-.3554	.3830
.50					-.3405	.4740	-.4123	.5106	-.4441	.4919	-.4418	.4269	-.3532	.2129
.60	-.1019	.3737	-.1994	.3848			-.3843	.4659	-.4312	.4660	-.4273	.2569	-.4108	-.1515
.70					-.2989	.3771	-.4269	.0822	-.4556	.0094	-.4285	-.0242	-.4256	-.1580
.80	-.2485	-.0081	-.3532	-.0825	-.3931	-.0322	-.4280	-.0303			-.4263	-.0467		
.90	-.2917	-.0472	-.3471	-.0779	-.3606	-.0700	-.3761	-.0440	-.3974	-.0349	-.3914	-.0564	-.4385	-.1673
.95			-.2932	-.1203	-.3233	-.0773	-.3445	-.0552	-.3948	-.0566	-.3908	-.0670	-.3996	-.1891

TAIL 2

TABLE III. - PRESSURE COEFFICIENTS, $\phi = 45°$, $\delta = 0°$, $M = 1.60$

(a) $\alpha = -3.27°$

	Cp at y/b of													
	0.02		0.22		0.44		0.56		0.67		0.83		0.98	
x/c	U.S.	L.S.	U.S.	L.S.	U.S.	L.S.	U.S.	L.S.	U.S.	L.S.	U.S.	L.S.	U.S.	L.S.
.05	.1642	.1241	.4546	.2376	.5611	.3987	.5881	.3766	.5175	.2655				.2033
.10	.1767	.1161	.3826	.2564	.4881	.3604			.5132	.4467	.5733	.4467	.5535	.4383
.15	.1744	.1146	.3460	.2250	.4377	.3254			.4671	.4027			.4195	.3508
.20	.1528	.0970	.3171	.2034	.4007	.2918	.4509	.3532	.4600	.3765	.4963	.4014	.3668	.3009
.25					.3611	.2630	.4075	.2925	.4433	.3395	.4651	.3666	.3065	.2575
.30	.0855	.0336							.4028	.3041	.4325	.3426	.2578	.2183
.40	.1283	.0203	-.0201	-.1389	-.0481	-.1289	-.0531	-.1145	-.0485	-.1110	.3504	.2919	.2057	.1815
.50			.0715	-.0663	-.0443	-.1441	-.0469	-.1307			-.0735	-.1182	.1482	.1076
.60					-.0042	-.1401	-.0337	-.1013			-.1007	-.1676	-.3204	-.3293
.70	.0673	-.0380	.0989	-.0266	.0309	-.1308	-.0602	-.1932	-.2809	-.3366	-.3077	-.3435	-.3330	-.3434
.80	-.2071	-.2227	-.2044	-.2656			-.2482	-.3401	-.2872	-.3402	-.3203	-.3190	-.2600	-.2753
.90	-.1666	-.2081	-.2406	-.3020	-.1917	-.2900	-.2145	-.3045	-.2809	-.3024	-.3106	-.3118	-.2546	-.2916
.95	-.1696	-.1856	-.2472	-.2731			-.2030	-.2813	-.2796	-.2954	-.2939	-.3092	-.2574	-.2875

TAIL 1

	Cp at y/b of													
	0.02		0.22		0.44		0.56		0.67		0.83		0.98	
x/c	U.S.	L.S.	U.S.	L.S.	U.S.	L.S.	U.S.	L.S.	U.S.	L.S.	U.S.	L.S.	U.S.	L.S.
.05	.3110	.1847	.5376	.2850			.7174	.3493			.6854	.3092	.6832	.2587
.10	.3055	.1500					.6302	.4071	.6392	.4037			.5695	.3621
.15					.5295	.3328	.5798	.3792	.6098	.4047	.3076	.4506	.4793	.3668
.20	.2844	.1231					.5330	.3531	.5357	.3803			.4175	.3282
.25	.0173	-.0740	.0628	.1609	.4454	.2862	.4953	.3243	.5284	.3568	.5606	.3926	.3829	.2933
.30			-.0672	-.1353			.4447	.2740	.4909	.3278	.5255	.3754	.3537	.2732
.40	.1678	-.0121							-.0356	-.0841	.3996	.2790	.3082	.2385
.50					-.0274	-.1169	-.0291	-.1057	-.0429	-.1096	-.0713	-.1100	.1960	.1208
.60	.1829	.0026	.1849	-.0572			-.0315	-.1220	-.0397	-.1152	-.1536	-.2039	-.2987	-.2847
.70					.0294	-.1410	-.1838	-.2649	-.2730	-.3120	-.3154	-.3393	-.3154	-.2255
.80	-.0953	-.1875	-.1452	-.2451	-.1546	-.3114	-.2696	-.3064			-.3013	-.3014		
.90	-.1162	-.1835	-.1840	-.2533	-.1656	-.2893	-.2465	-.2857	-.2826	-.2778	-.2919	-.2977	-.2682	-.3548
.95			-.2007	-.2351	-.1708	-.2782	-.2299	-.2757	-.2767	-.2874	-.2753	-.2981	-.2675	-.3654

TAIL 2

ORIGINAL PAGE IS
OF POOR QUALITY

TABLE III. - CONTINUED

(b) α = -1.21°

	Cp at y/b of													
	0.02		0.22		0.44		0.56		0.67		0.83		0.98	
x/c	U.S.	L.S.	U.S.	L.S.	U.S.	L.S.	U.S.	L.S.	U.S.	L.S.	U.S.	L.S.	U.S.	L.S.
.05	.1782	.1748	.4118	.3365	.4778	.5136	.5225	.5262	.4335	.4610				.4372
.10	.1796	.1615	.3427	.3529	.4390	.4458			.4517	.5288	.5249	.5477	.5376	.5155
.15	.1754	.1656	.3033	.3113	.3922	.4039			.4046	.4828			.3935	.3972
.20	.1500	.1482	.2767	.2913	.3612	.3702	.4126	.3924	.4106	.4474	.4425	.4675	.3466	.3434
.25					.3274	.3359	.3760	.3726	.4023	.4025	.4170	.4483	.2924	.2995
.30	.0488	.0516							.3731	.3693	.3963	.4199	.2559	.2511
.40	.0956	.0648	-.0643	-.1177	-.0642	-.0990	-.0698	-.0829	-.0567	-.0802	.3333	.3431	.2196	.2203
.50			.0108	-.0541	-.0715	-.1040	-.0698	-.0997			-.0842	-.0950	.1532	.1370
.60					-.0490	-.0980	-.0534	-.0982			-.1143	-.1435	-.3003	-.3190
.70	.0530	.0012	.0786	.0141	-.0254	-.0951	-.0961	-.1613	-.2968	-.3158	-.3181	-.3369	-.3017	-.3237
.80	-.2025	-.1883	-.2070	-.2361			-.2838	-.3171	-.3049	-.3251	-.3208	-.3114	-.2523	-.2770
.90	-.1683	-.1962	-.2408	-.2685	-.2034	-.2657	-.2735	-.2914	-.3036	-.2970	-.2990	-.2988	-.2509	-.2858
.95	-.1698	-.1925	-.2492	-.2632			-.2602	-.2740	-.2891	-.2833	-.2834	-.2974	-.2543	-.2858

TAIL 1

	Cp at y/b of													
	0.02		0.22		0.44		0.56		0.67		0.83		0.98	
x/c	U.S.	L.S.	U.S.	L.S.	U.S.	L.S.	U.S.	L.S.	U.S.	L.S.	U.S.	L.S.	U.S.	L.S.
.05	.2341	.2121	.4299	.3849			.6184	.5157			.5629	.5314	.5975	.4349
.10	.2374	.1910					.5464	.4778	.5512	.4779			.4996	.4302
.15					.4568	.3956	.5050	.4379	.5292	.4681	.5242	.4891	.4257	.3823
.20	.2146	.1638					.4639	.4060	.4692	.4391			.3813	.3383
.25	-.0091	-.0347	.0363	.2049	.3845	.3394	.4330	.3747	.4614	.4070	.5036	.4436	.3531	.3007
.30			-.0980	-.1064			.3944	.3148	.4355	.3708	.4762	.4201	.3258	.2794
.40	.1058	.0507							-.0585	-.0620	.3672	.3052	.2839	.2363
.50					-.0618	-.0864	-.0609	-.0801	-.0697	-.0846	-.0879	-.0970	.1792	.1041
.60	.1073	.0258	.1001	.0191			-.0667	-.0932	-.0698	-.0886	-.1697	-.1960	-.3028	-.2897
.70					-.0558	-.1029	-.2092	-.2458	-.2906	-.2986	-.3292	-.3187	-.3187	-.2478
.80	-.1325	-.1823	-.1831	-.2264	-.2364	-.2971	-.3008	-.2751			-.2987	-.2835		
.90	-.1499	-.1785	-.2136	-.2528	-.2140	-.2581	-.2894	-.2584	-.2736	-.2550	-.2856	-.2801	-.2825	-.3066
.95			-.2258	-.2353	-.2112	-.2538	-.2690	-.2570	-.2758	-.2672	-.2845	-.2907	-.2860	-.3001

TAIL 2

TABLE III. - CONTINUED

(c) α = 0.74°

	Cp at y/b of													
	0.02		0.22		0.44		0.56		0.67		0.83		0.98	
x/c	U.S.	L.S.	U.S.	L.S.	U.S.	L.S.	U.S.	L.S.	U.S.	L.S.	U.S.	L.S.	U.S.	L.S.
.05	.1635	.2397	.3422	.4403	.3452	.5956	.3538	.6443	.2602	.5878				.6173
.10	.1536	.2156	.2968	.4335	.3799	.5228			.3941	.6113	.4318	.6487	.4681	.5719
.15	.1549	.2212	.2609	.3870	.3383	.4717			.3443	.5543			.3570	.4468
.20	.1379	.2054	.2360	.3535	.3165	.4363	.3660	.4605	.3592	.5110	.3927	.5435	.3325	.3850
.25					.2889	.3971	.3369	.4412	.3598	.4635	.3613	.5259	.2880	.3320
.30	.0223	.0455							.3328	.4343	.3515	.4779	.2576	.2918
.40	.0669	.1452	-.0910	-.0821	-.0833	-.0718	-.0902	-.0600	-.0669	-.0560	.3103	.3777	.2253	.2446
.50			-.0420	-.0104	-.0954	-.0715	-.0913	-.0709			-.0920	-.0804	.1699	.1556
.60					-.0911	-.0644	-.0834	-.0653			-.1254	-.1327	-.2866	-.3147
.70	.0451	.0546	.0590	.0735	-.0654	-.0529	-.1186	-.1368	-.3071	-.2968	-.3256	-.3261	-.2607	-.3141
.80	-.2025	-.1472	-.2082	-.2011			-.3068	-.2963	-.3193	-.3083	-.3193	-.3177	-.2628	-.2753
.90	-.1700	-.1732	-.2436	-.2312	-.2370	-.2242	-.3010	-.2697	-.3081	-.3015	-.2912	-.2894	-.2848	-.2796
.95	-.1702	-.1819	-.2494	-.2354			-.2750	-.2552	-.2848	-.2816	-.2874	-.2844	-.2887	-.2930

TAIL 1

	Cp at y/b of													
	0.02		0.22		0.44		0.56		0.67		0.83		0.98	
x/c	U.S.	L.S.	U.S.	L.S.	U.S.	L.S.	U.S.	L.S.	U.S.	L.S.	U.S.	L.S.	U.S.	L.S.
.05	.1731	.2216	.3365	.4714			.4381	.6013			.4297	.6502	.4307	.5266
.10	.1850	.2145					.4758	.5355	.4747	.5449			.4384	.4739
.15					.3864	.4426	.4289	.4906	.4496	.5252	.5059	.5362	.3845	.4088
.20	.1560	.1885					.3979	.4536	.4110	.4868			.3444	.3515
.25	-.0185	-.0094	.0098	.2439	.3259	.3769	.3733	.4149	.3971	.4491	.4366	.4879	.3167	.3078
.30			-.1213	-.0865			.3417	.3469	.3766	.4050	.4178	.4574	.2929	.2809
.40	.0601	.1140							-.0778	-.0506	.3340	.3229	.2580	.2260
.50					-.0913	-.0641	-.0887	-.0585	-.0950	-.0679	-.0994	-.0873	.1603	.0824
.60	.0499	.0393	.0327	.0723			-.0955	-.0689	-.0960	-.0667	-.1792	-.1846	-.3074	-.3012
.70					-.0986	-.0676	-.2318	-.2281	-.3055	-.2825	-.3366	-.3252	-.3236	-.2681
.80	-.1647	-.1804	-.2210	-.2168	-.2847	-.2699	-.3203	-.2975			-.3060	-.2949		
.90	-.1737	-.1737	-.2478	-.2423	-.2681	-.2488	-.2960	-.2734	-.2785	-.2702	-.2915	-.2806	-.3008	-.2679
.95			-.2466	-.2353	-.2543	-.2300	-.2780	-.2581	-.2847	-.2704	-.2924	-.2783	-.2808	-.2618

TAIL 2

TABLE III. - CONTINUED

(d) α = 2.75°

	Cp at y/b of													
	0.02		0.22		0.44		0.56		0.67		0.83		0.98	
x/c	U.S.	L.S.	U.S.	L.S.	U.S.	L.S.	U.S.	L.S.	U.S.	L.S.	U.S.	L.S.	U.S.	L.S.
.05	.1292	.3295	.2293	.5533	.1820	.6799	.1746	.7405	.0664	.7210				.7396
.10	.1155	.2871	.2235	.5118	.2982	.6003			.2665	.6901	.2698	.7248	.0534	.6258
.15	.1102	.2929	.2049	.4584	.2754	.5470			.2602	.6254			.2170	.4960
.20	.1121	.2788	.1839	.4119	.2624	.5041	.3053	.5402	.2933	.5758	.3141	.6151	.2581	.4275
.25					.2415	.4578	.2860	.5041	.3052	.5299	.2911	.5850	.2672	.3551
.30	-.0280	.0304							.2821	.4930	.2944	.5271	.2549	.3143
.40	.0297	.2255	-.1089	-.0447	-.1099	-.0420	-.1141	-.0370	-.0862	-.0338	.2682	.4072	.2253	.2621
.50			-.0765	.0450	-.1233	-.0412	-.1174	-.0399			-.1031	-.0674	.1804	.1664
.60					-.1254	-.0307	-.1098	-.0322			-.1438	-.1160	-.2984	-.3107
.70	.0383	.1195	.0279	.1443	-.1057	.0032	-.1487	-.1060	-.3231	-.2798	-.3335	-.3149	-.2237	-.3190
.80	-.2040	-.1007	-.2044	-.1598			-.3277	-.2730	-.3354	-.2917	-.3146	-.3227	-.2569	-.2660
.90	-.1691	-.1472	-.2480	-.1981	-.2779	-.1739	-.3006	-.2520	-.3008	-.2965	-.2948	-.2913	-.3199	-.2767
.95	-.1641	-.1622	-.2502	-.2064			-.2770	-.2386	-.2903	-.2886	-.2929	-.2811	-.3399	-.2870

TAIL 1

	Cp at y/b of													
	0.02		0.22		0.44		0.56		0.67		0.83		0.98	
x/c	U.S.	L.S.	U.S.	L.S.	U.S.	L.S.	U.S.	L.S.	U.S.	L.S.	U.S.	L.S.	U.S.	L.S.
.05	.1349	.2096	.2260	.5169			.2198	.6626			.2255	.7244	.1811	.5987
.10	.1426	.2144					.3821	.5906	.3478	.5984			.3048	.5210
.15					.3042	.4866	.3577	.5380	.3740	.5696	.4409	.5790	.3529	.4385
.20	.1025	.1864					.3303	.4943	.3415	.5230			.3286	.3653
.25	-.0131	.0184	-.0375	.2732	.2584	.4108	.3098	.4486	.3321	.4792	.3676	.5248	.2974	.3096
.30			-.1521	-.0685			.2808	.3697	.3136	.4286	.3529	.4886	.2637	.2724
.40	.0342	.1703							-.1073	-.0422	.2875	.3381	.2250	.2109
.50					-.1253	-.0390	-.1186	-.0369	-.1239	-.0489	-.1170	-.0744	.1324	.0643
.60	.0054	.0544	-.0168	.1004			-.1285	-.0413	-.1276	-.0434	-.1948	-.1672	-.3166	-.3101
.70					-.1361	-.0251	-.2572	-.2056	-.3228	-.2651	-.3464	-.3109	-.3119	-.3075
.80	-.1923	-.1802	-.2576	-.2147	-.3131	-.2234	-.3405	-.2728			-.3151	-.3193		
.90	-.1784	-.1660	-.2863	-.2297	-.2985	-.2112	-.3039	-.2624	-.2895	-.2834	-.3003	-.2982	-.3358	-.2610
.95			-.2602	-.2332	-.2697	-.2071	-.2848	-.2570	-.2970	-.2965	-.3012	-.2860	-.3079	-.2535

TAIL 2

TABLE III.- CONTINUED

(e) $\alpha = 4.74°$

	Cp at y/b of													
	0.02		0.22		0.44		0.56		0.67		0.83		0.98	
x/c	U.S.	L.S.	U.S.	L.S.	U.S.	L.S.	U.S.	L.S.	U.S.	L.S.	U.S.	L.S.	U.S.	L.S.
.05	.0830	.4279	.1300	.6333	.0815	.7683	.0759	.8291	-.0525	.8323				.8263
.10	.0749	.3696	.1393	.5929	.2027	.6812			.1694	.7629	.1675	.7906	-.0330	.6743
.15	.0540	.3809	.1373	.5292	.1961	.6247			.1570	.6928			.1630	.5408
.20	.0613	.3600	.1313	.4816	.1952	.5733	.2332	.6109	.2141	.6412	.2013	.6746	.1791	.4704
.25					.1767	.5111	.2211	.5617	.2344	.5904	.1905	.6356	.1974	.4026
.30	-.0939	.0460							.2196	.5410	.2103	.5688	.1966	.3501
.40	-.0122	.2976	-.1562	-.0000	-.1388	-.0140	-.1432	-.0122	-.1138	-.0137	.2156	.4355	.1879	.2830
.50			-.1301	.1279	-.1534	-.0075	-.1459	-.0092			-.1238	-.0537	.1679	.1806
.60					-.1616	.0136	-.1381	.0033			-.1640	-.0981	-.2935	-.3089
.70	.0252	.1810	-.0024	.2155	-.1569	.1334	-.1760	-.0723	-.3379	-.2625	-.3442	-.3017	-.2486	-.3161
.80	-.2055	-.0547	-.2275	-.1256			-.3474	-.2248	-.3427	-.2733	-.3159	-.3115	-.2746	-.2442
.90	-.1698	-.1145	-.2570	-.1671	-.2953	-.1338	-.3089	-.1876	-.3071	-.2739	-.3039	-.2915	-.3570	-.2670
.95	-.1567	-.1298	-.2476	-.1738			-.2753	-.1640	-.2956	-.2713	-.3011	-.2783	-.3533	-.2795

TAIL 1

	Cp at y/b of													
	0.02		0.22		0.44		0.56		0.67		0.83		0.98	
x/c	U.S.	L.S.	U.S.	L.S.	U.S.	L.S.	U.S.	L.S.	U.S.	L.S.	U.S.	L.S.	U.S.	L.S.
.05	.1007	.1704	.0844	.5445			.0908	.7044			.0491	.7694	.0281	.6435
.10	.1008	.1844					.2265	.6276	.2026	.6358			.1281	.5608
.15					.2080	.5228	.2535	.5709	.2379	.6013	.3316	.6200	.1950	.4650
.20	.0603	.1720					.2411	.5214	.2522	.5520			.2265	.3845
.25	-.0010	.0591	-.0962	.3055	.1887	.4364	.2364	.4701	.2550	.5013	.2785	.5485	.2309	.3216
.30			-.2001	-.0514			.2143	.3836	.2441	.4451	.2737	.5059	.2230	.2755
.40	.0055	.1851							-.1402	-.0342	.2306	.3491	.2020	.1983
.50					-.1647	-.0105	-.1547	-.0139	-.1564	-.0302	-.1416	-.0616	.1111	.0364
.60	-.0339	.0676	-.0543	.1195			-.1660	-.0105	-.1611	-.0189	-.2151	-.1488	-.3302	-.3265
.70					-.1588	.0478	-.2852	-.1796	-.3445	-.2471	-.3588	-.2981	-.3115	-.3356
.80	-.2147	-.1783	-.2897	-.2117	-.3153	-.1827	-.3528	-.2337			-.3225	-.3083		
.90	-.1927	-.1572	-.2992	-.2224	-.3142	-.1977	-.3176	-.2159	-.3056	-.2558	-.3112	-.3097	-.3368	-.2566
.95			-.2536	-.2300	-.2835	-.1999	-.2898	-.2115	-.3106	-.2690	-.3096	-.3028	-.3330	-.2467

TAIL 2

TABLE III.- CONTINUED

(l) α = 5.76°

	Cp at y/b of													
	0.02		0.22		0.44		0.56		0.67		0.83		0.98	
x/c	U.S.	L.S.	U.S.	L.S.	U.S.	L.S.	U.S.	L.S.	U.S.	L.S.	U.S.	L.S.	U.S.	L.S.
.05	.0272	.5283	.0428	.7351	-.0283	.8491	-.0060	.9136	-.1303	.2248				.2903
.10	.0237	.4594	.0673	.6705	.1082	.7615			.0992	.3543	.0734	.2533	-.0387	.7144
.15	.0039	.4686	.0675	.6008	.1183	.6962			.0773	.7536			.0876	.5852
.20	.0063	.4365	.0589	.5463	.1241	.5329	.1609	.6752	.1265	.7209	.1019	.7292	.1313	.5135
.25					.1153	.3523	.1054	.3124	.1535	.6413	.1017	.6881	.1420	.5406
.30	-.1541	.1038							.1522	.5061	.1232	.6060	.1547	.3853
.40	-.0521	.3517	-.1998	.0653	-.1753	.0131	-.1735	.0123	-.1454	.0057	.1405	.4626	.1408	.3111
.50			-.1767	.2538	-.1883	.0347	-.1782	.0257			-.1551	-.0383	.1297	.1974
.60					-.1941	.1117	-.1705	.0531			-.1861	-.0776	-.3025	-.3065
.70	.0127	.2404	-.0310	.2757	-.1914	.2837	-.2103	-.0127	-.3573	-.2337	-.3554	-.2859	-.2895	-.3037
.80	-.2130	-.0140	-.2534	-.0892			-.3545	-.1314	-.3396	-.2381	-.3245	-.2936	-.3671	-.2368
.90	-.1691	-.0767	-.2727	-.1306	-.3074	-.1045	-.3184	-.1160	-.3193	-.2189	-.3158	-.2805	-.3818	-.2426
.95	-.1404	-.0917	-.2383	-.1368			-.2804	-.1235	-.3002	-.2158	-.3100	-.2707	-.3590	-.2629

TAIL 1

	Cp at y/b of													
	0.02		0.22		0.44		0.56		0.67		0.83		0.98	
x/c	U.S.	L.S.	U.S.	L.S.	U.S.	L.S.	U.S.	L.S.	U.S.	L.S.	U.S.	L.S.	U.S.	L.S.
.05	.1035	.1484	-.0045	.5801			.0229	.7378			-.0607	.8005	-.0809	.6758
.10	.1067	.1633					.0820	.6618	.0831	.6684			.0204	.5924
.15					.0952	.5552	.1302	.6030	.1213	.6301	.1336	.6505	.0769	.4825
.20	.0563	.1603					.1327	.5499	.1357	.5778			.1092	.3990
.25	-.0255	.0824	-.1531	.3312	.1229	.4622	.1471	.4932	.1467	.5221	.1606	.5685	.1222	.3280
.30			-.2071	-.0321			.1468	.3355	.1550	.4593	.1632	.5209	.1249	.2509
.40	-.0133	.1909							-.1693	-.0244	.1470	.3513	.1292	.1947
.50					-.2016	.0326	-.1579	.0168	-.1383	-.0060	-.1783	-.0523	.0747	.0753
.60	-.0534	.0833	-.0750	.1396			-.2001	.0342	-.1915	.0156	-.2416	-.1375	-.3425	-.3372
.70					-.1371	.1059	-.3054	-.1306	-.3625	-.2209	-.3655	-.2858	-.3181	-.3232
.80	-.2357	-.1847	-.2969	-.2065	-.3161	-.1614	-.3476	-.1900			-.3335	-.2945		
.90	-.2433	-.1423	-.2994	-.2181	-.3273	-.1931	-.3266	-.1839	-.3189	-.2189	-.3224	-.2948	-.3166	-.2642
.95			-.2662	-.2300	-.2949	-.1966	-.2995	-.1852	-.3129	-.2309	-.3174	-.2944	-.3274	-.2326

TAIL 2

TABLE III. - CONTINUED

(g) α = 8.75°

	Cp at y/b of													
	0.02		0.22		0.44		0.56		0.67		0.83		0.98	
x/c	U.S.	L.S.	U.S.	L.S.	U.S.	L.S.	U.S.	L.S.	U.S.	L.S.	U.S.	L.S.	U.S.	L.S.
.05	-.0496	.6222	-.0286	.8361	-.1203	.9307	-.0822	.9896	-.2046	1.0313				.9373
.10	-.0363	.5537	.0023	.7483	.0284	.8385			.0354	.9034	-.0056	.9155	-.1494	.7619
.15	-.0594	.5544	.0029	.6769	.0506	.7636			.0135	.8252			.0251	.6312
.20	-.0419	.5235	-.0032	.6130	.0604	.6933	.0913	.7331	.0620	.7625	.0642	.7779	.0936	.5542
.25					.0539	.6111	.0915	.6656	.0917	.6983	.0325	.7277	.0907	.4813
.30	-.1928	.1771							.0886	.6336	.0514	.6467	.1023	.4238
.40	-.0948	.4351	-.2338	.1543	-.2102	.0538	-.2057	.0442	-.1841	.0285	.0775	.4930	.1090	.3465
.50			-.2141	.3675	-.2225	.1278	-.2086	.0852			-.1914	-.0204	.0868	.2211
.60					-.2322	.3019	-.2013	.1454			-.2136	-.0524	-.3291	-.3037
.70	-.0063	.3067	-.1536	.3511	-.2310	.3519	-.2417	.1057	-.3759	-.2021	-.3638	-.2663	-.3428	-.2951
.80	-.2212	.0313	-.2818	-.0479			-.3402	-.0675	-.3365	-.1756	-.3337	-.2717	-.4329	-.2559
.90	-.1683	-.0340	-.2767	-.0878	-.3049	-.0762	-.3103	-.0889	-.3244	-.1416	-.3276	-.2665	-.4024	-.2158
.95	-.1185	-.0468	-.2129	-.0986			-.2803	-.0999	-.3062	-.1275	-.3130	-.2646	-.3891	-.2362

TAIL 1

	Cp at y/b of													
	0.02		0.22		0.44		0.56		0.67		0.83		0.98	
x/c	U.S.	L.S.	U.S.	L.S.	U.S.	L.S.	U.S.	L.S.	U.S.	L.S.	U.S.	L.S.	U.S.	L.S.
.05	.1205	.1676	-.0677	.5920			-.1220	.7639			-.1568	.8128	-.1628	.6869
.10	.1190	.1740					-.0497	.6927	-.0261	.6951			-.0737	.6093
.15					.0050	.5865	.0083	.6315	.0036	.6554	.0748	.6649	-.0258	.4968
.20	.0633	.1587					.0303	.5723	.0197	.5966			.0089	.4157
.25	-.0537	.0771	-.1991	.3467	.0625	.4815	.0543	.5098	.0384	.5376	.0366	.5633	.0256	.3444
.30			-.2204	-.0105			.0726	.4043	.0517	.4682	.0495	.5155	.0383	.3003
.40	-.0165	.1789							-.2026	-.0172	.0498	.3478	.0457	.2135
.50					-.2292	.0894	-.2184	.0612	-.2179	.0213	-.2248	-.0394	.0140	.0396
.60	-.0648	.0902	-.0932	.1567			-.2321	.0985	-.2209	.0537	-.2769	-.1120	-.3567	-.3380
.70					-.1426	.1550	-.3288	-.0821	-.3783	-.1900	-.3555	-.2558	-.3412	-.3139
.80	-.2501	-.1887	-.3128	-.1998	-.3213	-.1550	-.3554	-.1668			-.3424	-.2587		
.90	-.2687	-.1290	-.3172	-.2124	-.3360	-.1919	-.3372	-.1747	-.3264	-.1790	-.3293	-.2566	-.3213	-.2789
.95			-.2862	-.2274	-.2977	-.1968	-.3098	-.1827	-.3113	-.1945	-.3190	-.2619	-.3118	-.2703

TAIL 2

TABLE III.- CONTINUED
(h) α = 10.76°

	Cp at y/b of													
	0.02		0.22		0.44		0.56		0.67		0.83		0.98	
x/c	U.S.	L.S.	U.S.	L.S.	U.S.	L.S.	U.S.	L.S.	U.S.	L.S.	U.S.	L.S.	U.S.	L.S.
.05	-.1306	.7158	-.1006	.9323	-.1926	1.0066	-.1542	1.0631	-.2401	1.0939				.9833
.10	-.0902	.6608	-.0634	.8362	-.0328	.9115			-.0230	.9681	-.0818	.9680	-.1778	.8026
.15	-.0959	.6525	-.0561	.7595	-.0129	.8313			-.0406	.8851			-.0672	.6758
.20	-.0729	.6208	-.0629	.6846	-.0040	.7543	.0265	.7937	.0038	.8161	.0126	.8240	.0519	.5953
.25					-.0009	.6671	.0330	.7167	.0295	.7451	-.0164	.7696	.0532	.5233
.30	-.2290	.2827							.0267	.6731	-.0162	.6339	.0529	.4640
.40	-.1408	.5148	-.2687	.3697	-.2441	.1293	-.2377	.0768	-.2215	.0472	.0110	.5223	.0633	.3850
.50			-.2522	.4304	-.2544	.2211	-.2429	.1699			-.2285	-.0004	.0533	.2510
.60					-.2641	.4630	-.2352	.2600			-.2470	-.0241	-.3529	-.2976
.70	-.0331	.3771	-.2138	.4417	-.2683	.4117	-.2734	.2554	-.3493	-.1190	-.3486	-.2425	-.4068	-.2829
.80	-.2283	.0760	-.3225	-.0173			-.3277	-.0395	-.3279	-.0691	-.3412	-.2379	-.4427	-.2626
.90	-.1698	.0036	-.2787	-.0599	-.3086	-.0421	-.3020	-.0581	-.3130	-.0746	-.3385	-.2188	-.4150	-.2001
.95	-.1060	-.0065	-.1742	-.0686			-.2888	-.0663	-.3032	-.0866	-.3073	-.2178	-.3990	-.2178

TAIL 1

	Cp at y/b of													
	0.02		0.22		0.44		0.56		0.67		0.83		0.98	
x/c	U.S.	L.S.	U.S.	L.S.	U.S.	L.S.	U.S.	L.S.	U.S.	L.S.	U.S.	L.S.	U.S.	L.S.
.05	.1282	.1723	-.0899	.5795			-.2102	.7835			-.2330	.8100	-.2333	.7108
.10	.1275	.1742					-.1625	.7138	-.1269	.7110			-.1699	.6536
.15					-.0701	.6084	-.1079	.6514	-.1027	.6652	-.0206	.6786	-.1140	.5304
.20	.0771	.1541					-.0667	.5917	-.0923	.6022			-.0687	.4452
.25	-.0520	.0570	-.2154	.3569	.0017	.4946	-.0240	.5285	-.0687	.5359	-.0724	.5878	-.0441	.3699
.30			-.2286	.0152			.0043	.4176	-.0566	.4643	-.0559	.5393	-.0330	.3192
.40	-.0347	.1638							-.2440	-.0118	-.0460	.3656	-.0199	.2279
.50					-.2470	.1424	-.2541	.1041	-.2567	.0607	-.2724	-.0076	-.0565	.0441
.60	-.0816	.0807	-.1191	.1743			-.2643	.1613	-.2583	.1119	-.3215	-.0705	-.3810	-.3464
.70					-.1511	.1780	-.3299	-.0533	-.3958	-.1235	-.3439	-.2199	-.3640	-.3201
.80	-.2576	-.1948	-.3241	-.1957	-.3290	-.1613	-.3612	-.1465			-.3526	-.2157		
.90	-.2715	-.1249	-.3429	-.2132	-.3450	-.1932	-.3382	-.1582	-.3400	-.1430	-.3314	-.2088	-.3441	-.2965
.95			-.3118	-.2287	-.3093	-.1955	-.2841	-.1664	-.3241	-.1614	-.3168	-.2088	-.3236	-.2856

TAIL 2

TABLE III. - CONTINUED

(l) $\alpha = 12.75°$

	Cp at y/b of													
	0.02		0.22		0.44		0.56		0.67		0.83		0.98	
x/c	U.S.	L.S.	U.S.	L.S.	U.S.	L.S.	U.S.	L.S.	U.S.	L.S.	U.S.	L.S.	U.S.	L.S.
.05	-.1817	.8113	-.1692	1.0254	-.2483	1.0758	-.2117	1.1253	-.2774	1.1549				1.0312
.10	-.1252	.7788	-.1283	.9191	-.1136	.9822			-.0964	1.0241	-.1522	1.0166	-.2239	.8478
.15	-.1303	.7690	-.1130	.8354	-.0739	.8948			-.0917	.9370			-.1052	.7213
.20	-.1071	.7282	-.1164	.7474	-.0600	.8109	-.0266	.8471	-.0532	.8661	-.0489	.8677	-.0240	.6398
.25					-.0558	.7135	-.0230	.7611	-.0299	.7699	-.0598	.8132	.0361	.5665
.30	-.2601	.4241							-.0335	.7130	-.0669	.7226	.0323	.5064
.40	-.1637	.5681	-.3032	.5176	-.2781	.2157	-.2679	.1542	-.2559	.0698	-.0488	.5529	.0324	.4236
.50			-.2885	.5245	-.2863	.5486	-.2764	.2506			-.2553	.0228	.0314	.2822
.60					-.2943	.5131	-.2661	.5065			-.2586	.0116	-.3655	-.2788
.70	-.0546	.4350	-.2550	.5071	-.2990	.4666	-.3035	.2945	-.3176	-.0122	-.3457	-.1896	-.4358	-.2448
.80	-.2351	.1145	-.3692	.0084			-.3014	-.0164	-.3156	-.0400	-.3442	-.1588	-.4380	-.2272
.90	-.1751	.0388	-.3090	-.0266	-.2877	-.0142	-.2850	-.0392	-.3111	-.0536	-.3361	-.1084	-.4182	-.1908
.95	-.1035	.0316	-.1537	-.0320			-.2805	-.0462	-.3049	-.0625	-.2857	-.0967	-.3932	-.1972

TAIL 1

	Cp at y/b of													
	0.02		0.22		0.44		0.56		0.67		0.83		0.98	
x/c	U.S.	L.S.	U.S.	L.S.	U.S.	L.S.	U.S.	L.S.	U.S.	L.S.	U.S.	L.S.	U.S.	L.S.
.05	.1321	.1689	-.0851	.5615			-.2939	.7860			-.3033	.8314	-.2987	.7251
.10	.1300	.1676					-.2512	.7174	-.2181	.7132			-.2592	.6732
.15					-.1253	.6303	-.2148	.6523	-.1981	.6759	-.1034	.6973	-.2117	.5488
.20	.0729	.1505					-.1581	.5861	-.1895	.6183			-.1656	.4631
.25	-.0698	.0315	-.2169	.3556	-.0588	.5028	-.1037	.5181	-.1638	.5570	-.1606	.6017	-.1352	.3830
.30			-.2390	.0442			-.0723	.4061	-.1492	.4829	-.1537	.5508	-.1151	.3332
.40	-.0277	.1539							-.2911	.0154	-.1393	.3704	-.0794	.2351
.50					-.2703	.1936	-.2931	.1679	-.2926	.1228	-.3178	.0248	-.1118	.0484
.60	-.0692	.0608	-.1120	.1828			-.2833	.2541	-.2898	.2248	-.3563	-.0160	-.3736	-.3476
.70					-.1672	.2054	-.3259	-.0204	-.4080	-.0934	-.3532	-.1616	-.3662	-.3277
.80	-.2696	-.2002	-.3332	-.1991	-.3372	-.1436	-.3628	-.1297			-.3631	-.1513		
.90	-.2822	-.1410	-.3499	-.2182	-.3477	-.1770	-.3432	-.1494	-.3430	-.1296	-.3397	-.1609	-.3314	-.2746
.95			-.3188	-.2274	-.3141	-.1819	-.3018	-.1604	-.3216	-.1505	-.3286	-.1705	-.3249	-.2741

TAIL 2

TABLE III. - CONTINUED

(j) α = 16.76°

	Cp at y/b of													
	0.02		0.22		0.44		0.56		0.67		0.83		0.98	
x/c	U.S.	L.S.	U.S.	L.S.	U.S.	L.S.	U.S.	L.S.	U.S.	L.S.	U.S.	L.S.	U.S.	L.S.
.05	-.2970	.9914	-.2997	1.1919	-.3418	1.2022	-.3145	1.2399	-.2538	1.2580				1.1190
.10	-.1983	1.0302	-.2481	1.0796	-.2562	1.1142			-.2671	1.1459	-.2734	1.1235	-.3035	.9442
.15	-.1950	1.0090	-.2246	.9836	-.2044	1.0254			-.2061	1.0568			-.2096	.8186
.20	-.1695	.9164	-.2189	.9822	-.1828	.9354	-.1442	.9658	-.1467	.9820	-.1670	.9719	-.0835	.7384
.25					-.1718	.8282	-.1539	.8758	-.1255	.9016	-.1543	.9117	-.0571	.6655
.30	-.3126	.7817							-.1259	.8160	-.1407	.8166	-.0549	.6040
.40	-.2519	.7091	-.3611	.7021	-.3392	.5517	-.3282	.4257	-.3050	.3418	-.1219	.6303	-.0668	.5140
.50			-.3504	.6780	-.3450	.6533	-.3299	.6280			-.3083	.2290	-.1344	.3519
.60					-.3474	.6282	-.3132	.6047			-.2942	.3279	-.4227	-.2690
.70	-.1232	.5407	-.2919	.6119	-.3338	.5496	-.3073	.3519	-.3049	.0230	-.3492	-.0107	-.4531	-.1987
.80	-.2764	.1751	-.3546	.0523			-.2829	.0227	-.2962	-.0068	-.3592	-.0288	-.4521	-.0788
.90	-.1959	.0759	-.2718	.0250	-.2729	.0305	-.2702	.0066	-.2895	-.0141	-.3258	-.0413	-.4598	-.0086
.95	-.1160	.0769	-.2133	.0239			-.2649	-.0005	-.2906	-.0212	-.2946	-.0454	-.4702	-.0330

TAIL 1

	Cp at y/b of													
	0.02		0.22		0.44		0.56		0.67		0.83		0.98	
x/c	U.S.	L.S.	U.S.	L.S.	U.S.	L.S.	U.S.	L.S.	U.S.	L.S.	U.S.	L.S.	U.S.	L.S.
.05	.1124	.1893	.0186	.4753			-.3944	.7550			-.4029	.7894	-.4200	.7300
.10	.1238	.1483					-.3567	.7085	-.4019	.7110			-.4126	.6944
.15					-.2261	.6177	-.3039	.6527	-.3352	.6724	-.2190	.7014	-.3886	.5811
.20	.0783	.1505					-.2524	.5940	-.3062	.6181			-.3562	.4959
.25	-.0739	-.0183	-.1794	.2850	-.1677	.4983	-.2248	.5279	-.2712	.5553	-.3399	.6013	-.3319	.4126
.30			-.2410	.0387			-.2207	.4142	-.2527	.4784	-.3274	.5481	-.3111	.3625
.40	-.0260	.1498							-.3652	.1176	-.3053	.3664	-.2824	.2555
.50					-.2924	.2839	-.3286	.3210	-.3611	.3380	-.4075	.1997	-.2820	.0728
.60	-.0681	-.0009	-.1332	.1746			-.3081	.2904	-.3485	.3157	-.4265	.1843	-.4298	-.2347
.70					-.2550	.2093	-.3632	-.0113	-.4277	-.0708	-.4440	-.0901	-.4305	-.2156
.80	-.2541	-.2049	-.3339	-.1912	-.3811	-.1405	-.4003	-.1230			-.4362	-.1161		
.90	-.2714	-.1847	-.3591	-.2419	-.3766	-.1763	-.3743	-.1466	-.3667	-.1209	-.3757	-.1327	-.4339	-.2348
.95			-.3300	-.2381	-.3476	-.1828	-.3388	-.1582	-.3313	-.1438	-.3665	-.1431	-.3834	-.2536

TAIL 2

TABLE III. - CONCLUDED

(k) α = 18.75°

	Cp at y/b of													
	0.02		0.22		0.44		0.56		0.67		0.83		0.98	
x/c	U.S.	L.S.	U.S.	L.S.	U.S.	L.S.	U.S.	L.S.	U.S.	L.S.	U.S.	L.S.	U.S.	L.S.
.05	-.3484	1.0414	-.3535	1.2634	-.3739	1.2623	-.3520	1.2905	-.3884	1.3052				1.1548
.10	-.2619	1.1442	-.3031	1.1549	-.3212	1.1815			-.3084	1.2018	-.3182	1.1775	-.3376	.9884
.15	-.2357	1.1152	-.2766	1.0601	-.2555	1.0923			-.2559	1.1155			-.2576	.8684
.20	-.2077	1.0081	-.2672	.9561	-.2302	1.0021	-.2044	1.0294	-.2015	1.0384	-.2179	1.0241	-.1210	.7905
.25					-.2133	.8958	-.1965	.9382	-.1700	.9602	-.2140	.9640	-.1061	.7152
.30	-.3365	.8885							-.1714	.8720	-.1919	.8674	-.0982	.6526
.40	-.2847	.7949	-.3855	.7724	-.3637	.6991	-.3522	.5653	-.3351	.4540	-.1616	.6781	-.1416	.5630
.50			-.3744	.7411	-.3683	.7113	-.3553	.6920			-.3255	.3201	-.2109	.3891
.60					-.3706	.6780	-.3425	.6526			-.3094	.4213	-.4341	-.2285
.70	-.1287	.5887	-.3161	.6560	-.3522	.5837	-.3211	.3761	-.3201	.0313	-.3582	.0056	-.4482	-.1312
.80	-.2832	.1956	-.3381	.0667			-.2888	.0376	-.3041	.0128	-.3680	-.0069	-.4576	-.0430
.90	-.2003	.0993	-.2803	.0464	-.2817	.0478	-.2809	.0270	-.3006	.0106	-.3419	-.0168	-.4683	-.0136
.95	-.1342	.0860	-.2279	.0460			-.2766	.0214	-.3023	.0043	-.3064	-.0205	-.4658	-.0326

TAIL 1

	Cp at y/b of													
	0.02		0.22		0.44		0.56		0.67		0.83		0.98	
x/c	U.S.	L.S.	U.S.	L.S.	U.S.	L.S.	U.S.	L.S.	U.S.	L.S.	U.S.	L.S.	U.S.	L.S.
.05	.0993	.1808	.0322	.4269			-.3947	.7138			-.4268	.7526	-.4453	.6843
.10	.1119	.1526					-.3955	.6775	-.3920	.6849			-.4431	.6759
.15					-.2810	.5934	-.3724	.6314	-.3860	.6537	-.3251	.6843	-.4388	.5759
.20	.0705	.1381					-.3327	.5755	-.3889	.6013			-.4323	.4995
.25	-.0685	-.0210	-.1770	.2631	-.1808	.4799	-.3052	.5101	-.3716	.5426	-.3743	.5781	-.4130	.4222
.30			-.2500	.0424			-.2980	.3996	-.3580	.4679	-.3542	.5302	-.3878	.3789
.40	-.0306	.1187							-.4025	.2040	-.3670	.3801	-.3488	.2875
.50					-.3212	.2786	-.3469	.3163	-.4009	.3298	-.4210	.3005	-.3295	.1252
.60	-.0806	-.0213	-.1511	.1484			-.3329	.2844	-.3853	.3065	-.4370	.1696	-.4683	-.1967
.70					-.2782	.1963	-.3849	-.0177	-.4504	-.0737	-.4578	-.0865	-.4616	-.2022
.80	-.2405	-.2247	-.3292	-.2017	-.4013	-.1462	-.4190	-.1283			-.4395	-.1108		
.90	-.2502	-.2088	-.3519	-.2509	-.3939	-.1823	-.3946	-.1516	-.3847	-.1268	-.3942	-.1251	-.4292	-.2168
.95			-.3301	-.2498	-.3662	-.1889	-.3634	-.1633	-.3551	-.1497	-.3945	-.1371	-.3953	-.2359

TAIL 2

TABLE IV. - PRESSURE COEFFICIENTS, Φ = 67.5°, δ = 0°, M = 1.60

(a) α = -3.24°

	Cp at y/b of													
	0.02		0.22		0.44		0.56		0.67		0.83		0.98	
x/c	U.S.	L.S.	U.S.	L.S.	U.S.	L.S.	U.S.	L.S.	U.S.	L.S.	U.S.	L.S.	U.S.	L.S.
.05	.2513	.1378	.5120	.2212	.6267	.2578	.6420	.2902	.5767	.1633				.0602
.10	.2523	.0980	.4420	.2395	.5385	.3323			.5643	.4041	.6193	.3618	.5803	.2778
.15	.2422	.1072	.4013	.2174	.4865	.3072			.5296	.3709			.4440	.3449
.20	.2152	.0953	.3664	.2090	.4478	.2776	.4825	.3576	.5105	.3465	.5365	.3839	.3880	.3027
.25					.4029	.2501	.4424	.2702	.4849	.3223	.5096	.3470	.3259	.2628
.30	.0994	.0035							.4379	.2884	.4689	.3130	.2743	.2220
.40	.1546	-.0017	.0171	-.1599	-.0281	-.1367	-.0314	-.1212	-.0346	-.1191	.3753	.2816	.2185	.1861
.50			.1003	-.1126	-.0163	-.1529	-.0265	-.1377			-.0659	-.1153	.1574	.1157
.60					.0325	-.1489	-.0178	-.0738			-.0920	-.1713	-.3149	-.3190
.70	.1147	-.0325	.1388	-.0385	.0852	-.1474	-.0349	-.2003	-.2668	-.3409	-.3021	-.3503	-.3216	-.3104
.80	-.1920	-.2153	-.1711	-.2667			-.2131	-.3447	-.2720	-.3407	-.3143	-.3210	-.2455	-.2837
.90	-.1501	-.2044	-.2141	-.2983	-.1642	-.3016	-.1731	-.3079	-.2593	-.3054	-.3111	-.3134	-.2513	-.3107
.95	-.1592	-.1758	-.2258	-.2705			-.1657	-.2877	-.2533	-.2981	-.2990	-.3063	-.2518	-.3140

TAIL 1

	Cp at y/b of													
	0.02		0.22		0.44		0.56		0.67		0.83		0.98	
x/c	U.S.	L.S.	U.S.	L.S.	U.S.	L.S.	U.S.	L.S.	U.S.	L.S.	U.S.	L.S.	U.S.	L.S.
.05	.2550	.2383	.4443	.3801			.6330	.5127			.6047	.5368	.6075	.4265
.10	.2570	.2052					.5661	.4769	.5761	.4876			.5230	.4438
.15					.4762	.3934	.5288	.4416	.5533	.4824	.5724	.5377	.4404	.3993
.20	.2364	.1633					.4854	.4145	.4841	.4542			.4009	.3554
.25	-.0131	-.0481	.0382	.2172	.4037	.3356	.4550	.3863	.4881	.4229	.5245	.4630	.3741	.3227
.30			-.0914	-.1106			.4173	.3285	.4628	.3858	.4944	.4380	.3452	.3019
.40	.1066	.0459							-.0434	-.0524	.3816	.3131	.3080	.2609
.50					-.0560	-.0851	-.0506	-.0738	-.0589	-.0767	-.0802	-.0930	.2041	.1338
.60	.1555	.0401	.1403	-.0080			-.0568	-.0886	-.0589	-.0815	-.1631	-.1919	-.2909	-.2772
.70					-.0495	-.1127	-.2027	-.2433	-.2869	-.2951	-.3231	-.3218	-.2755	-.2262
.80	-.1060	-.1623	-.1556	-.1989	-.2251	-.2907	-.2963	-.2695			-.2949	-.2823		
.90	-.1269	-.1557	-.1915	-.2217	-.1875	-.2665	-.2814	-.2565	-.2664	-.2538	-.2903	-.2802	-.2921	-.3319
.95			-.2069	-.2087	-.1822	-.2536	-.2624	-.2544	-.2719	-.2666	-.2811	-.2816	-.2952	-.3342

TAIL 2

TABLE IV.- CONTINUED
(b) $\alpha = -1.25°$

	Cp at y/b of													
	0.02		0.22		0.44		0.56		0.67		0.83		0.98	
x/c	U.S.	L.S.	U.S.	L.S.	U.S.	L.S.	U.S.	L.S.	U.S.	L.S.	U.S.	L.S.	U.S.	L.S.
.05	.2045	.1779	.4317	.3239	.5124	.5161	.5507	.5039	.4738	.4351				.3720
.10	.2007	.1543	.3648	.3339	.4602	.4382			.4763	.5124	.5484	.5258	.5438	.5039
.15	.1924	.1621	.3288	.3024	.4132	.3950			.4327	.4639			.4047	.3886
.20	.1675	.1460	.3007	.2874	.3819	.3608	.4383	.3810	.4355	.4348	.4626	.4535	.3536	.3369
.25					.3466	.3295	.3926	.3587	.4253	.3906	.4432	.4345	.2969	.2945
.30	.0612	.0375							.3900	.3586	.4197	.4093	.2583	.2577
.40	.1146	.0513	-.0453	-.1217	-.0540	-.1050	-.0594	-.0875	-.0496	-.0829	.3467	.3371	.2197	.2191
.50			.0303	-.0685	-.0610	-.1118	-.0598	-.1067			-.0803	-.0946	.1571	.1386
.60					-.0307	-.1070	-.0479	-.1035			-.1126	-.1515	-.3025	-.3160
.70	.0775	.0019	.1009	.0084	-.0025	-.1058	-.0891	-.1663	-.2909	-.3196	-.3171	-.3389	-.2965	-.3182
.80	-.1962	-.1866	-.1927	-.2416			-.2750	-.3214	-.2995	-.3284	-.3196	-.3123	-.2506	-.2749
.90	-.1609	-.1945	-.2286	-.2705	-.1885	-.2746	-.2579	-.2925	-.2991	-.2945	-.2885	-.3007	-.2450	-.2900
.95	-.1647	-.1884	-.2390	-.2610			-.2418	-.2746	-.2893	-.2838	-.2825	-.2977	-.2500	-.2839

TAIL 1

	Cp at y/b of													
	0.02		0.22		0.44		0.56		0.67		0.83		0.98	
x/c	U.S.	L.S.	U.S.	L.S.	U.S.	L.S.	U.S.	L.S.	U.S.	L.S.	U.S.	L.S.	U.S.	L.S.
.05	.2137	.2344	.3868	.4290			.5542	.5569			.5231	.6072	.5308	.4851
.10	.2179	.2123					.5188	.5001	.5247	.5215			.4755	.4601
.15					.4310	.4124	.4788	.4631	.5027	.5078	.5490	.5367	.4083	.4020
.20	.1986	.1900					.4404	.4369	.4474	.4718			.3705	.3539
.25	-.0214	-.0225	.0267	.2338	.3639	.3526	.4127	.4060	.4420	.4361	.4815	.4779	.3435	.3144
.30			-.1081	-.0957			.3786	.3432	.4223	.3978	.4567	.4501	.3178	.2899
.40	.0796	.0886							-.0609	-.0496	.3570	.3215	.2831	.2420
.50					-.0750	-.0719	-.0688	-.0636	-.0769	-.0709	-.0907	-.0890	.1827	.1079
.60	.0983	.0368	.0834	.0401			-.0747	-.0754	-.0777	-.0732	-.1736	-.1872	-.2996	-.2867
.70					-.0692	-.0885	-.2146	-.2347	-.2947	-.2902	-.3298	-.3200	-.2990	-.2430
.80	-.1370	-.1728	-.1894	-.2081	-.2605	-.2868	-.3058	-.2902			-.2984	-.2796		
.90	-.1542	-.1652	-.2166	-.2349	-.2350	-.2589	-.2911	-.2556	-.2703	-.2510	-.2866	-.2739	-.2979	-.2903
.95			-.2277	-.2233	-.2243	-.2397	-.2700	-.2517	-.2766	-.2584	-.2861	-.2752	-.2868	-.2850

TAIL 2

TABLE IV. - CONTINUED

(c) α = 0.30°

	Cp at y/b of													
	0.02		0.22		0.44		0.56		0.67		0.83		0.93	
x/c	U.S.	L.S.	U.S.	L.S.	U.S.	L.S.	U.S.	L.S.	U.S.	L.S.	U.S.	L.S.	U.S.	L.S.
.05	.1612	.2444	.2283	.4479	.3248	.6044	.3287	.6325	.2397	.6172				.5329
.10	.1472	.2214	.2911	.4303	.3759	.5305			.3905	.6108	.4191	.6487	.4392	.5745
.15	.1487	.2247	.2602	.3927	.3341	.4721			.3394	.5546			.3463	.4487
.20	.1328	.2071	.2379	.3574	.3138	.4427	.3537	.4627	.3535	.5111	.3873	.5429	.3256	.2859
.25					.2858	.4041	.3337	.4427	.3555	.4630	.3557	.5155	.2738	.3311
.30	.0211	.0407							.3237	.4351	.3448	.4791	.2481	.2900
.40	.0750	.1465	-.0874	-.0730	-.0836	-.0706	-.0911	-.0806	-.0889	-.0563	.3059	.3794	.2143	.2401
.50			-.0369	-.0053	-.0951	-.0720	-.0926	-.0719			-.0944	-.0793	.1592	.1504
.60					-.0906	-.0654	-.0855	-.0668			-.1291	-.1314	-.2900	-.3179
.70	.0425	.0603	.0521	.0768	-.0563	-.0537	-.1204	-.1375	-.3076	-.2961	-.3277	-.3255	-.2538	-.3209
.80	-.2041	-.1450	-.2100	-.2007			-.3079	-.2956	-.3196	-.3073	-.3185	-.3239	-.2605	-.2758
.90	-.1724	-.1720	-.2435	-.2327	-.2387	-.2239	-.3011	-.2707	-.3078	-.3022	-.2930	-.2924	-.2808	-.2784
.95	-.1712	-.1819	-.2490	-.2361			-.2748	-.2536	-.2548	-.2811	-.2901	-.2863	-.2839	-.2913

TAIL 1

	Cp at y/b of													
	0.02		0.22		0.44		0.56		0.67		0.83		0.98	
x/c	U.S.	L.S.	U.S.	L.S.	U.S.	L.S.	U.S.	L.S.	U.S.	L.S.	U.S.	L.S.	U.S.	L.S.
.05	.1712	.2212	.3378	.4766			.4313	.5952			.4302	.6557	.4223	.5391
.10	.1840	.2132					.4566	.5337	.4746	.5510			.4358	.4817
.15					.3615	.4327	.4233	.4950	.4507	.5312	.5063	.5570	.3815	.4126
.20	.1531	.1399					.3943	.4597	.4118	.4317			.3406	.3554
.25	-.0184	-.0005	.0087	.2478	.3228	.3763	.3706	.4137	.3962	.4511	.4323	.4951	.3158	.3090
.30			-.1224	-.0900			.3399	.3500	.3745	.4077	.4134	.4663	.2911	.2797
.40	.0596	.1243							-.0789	-.0480	.3318	.3236	.2587	.2275
.50					-.0909	-.0597	-.0876	-.0543	-.0946	-.0639	-.0995	-.0952	.1632	.0847
.60	.0492	.0331	.0335	.0691			-.0919	-.0638	-.0935	-.0618	-.1809	-.1812	-.3080	-.3009
.70					-.0907	-.0618	-.2283	-.2244	-.3032	-.2790	-.3390	-.3201	-.3238	-.2665
.80	-.1665	-.1795	-.2230	-.2143	-.2832	-.2671	-.3184	-.2947			-.3088	-.2913		
.90	-.1761	-.1639	-.2492	-.2389	-.2726	-.2474	-.2979	-.2724	-.2776	-.2704	-.2945	-.2749	-.3022	-.2614
.95			-.2493	-.2342	-.2591	-.2289	-.2782	-.2565	-.2850	-.2684	-.2938	-.2740	-.2792	-.2552

TAIL 2

ORIGINAL PAGE IS
OF POOR QUALITY

TABLE IV. - CONTINUED
(d) α = 2.75°

	Cp at y/b of													
	0.02		0.22		0.44		0.56		0.67		0.83		0.98	
x/c	U.S.	L.S.	U.S.	L.S.	U.S.	L.S.	U.S.	L.S.	U.S.	L.S.	U.S.	L.S.	U.S.	L.S.
.05	.1143	.3283	.1846	.5713	.1493	.6978	.1314	.7576	.0181	.7666				.7734
.10	.0961	.2996	.1953	.5287	.2577	.6208			.2257	.6999	.2189	.7299	.0143	.6359
.15	.0973	.3038	.1904	.4753	.2454	.5659			.2272	.6337			.1779	.5040
.20	.0991	.2857	.1731	.4300	.2367	.5214	.2761	.5427	.2622	.5833	.2753	.6221	.2189	.4342
.25					.2193	.4689	.2620	.5117	.2738	.5359	.2592	.5904	.2303	3685
.30	-.0321	.0453							.2550	.4954	.2616	.5314	.2232	.3152
.40	.0324	.2354	-.1108	-.0285	-.1207	-.0374	-.1244	-.0353	-.0975	-.0348	.2456	.4105	.1988	.2516
.50			-.0786	.0780	-.1298	-.0336	-.1285	-.0339			-.1131	-.0652	.1570	.1538
.60					-.1300	-.0194	-.1196	-.0286			-.1553	-.1096	-.3058	-.3175
.70	.0114	.1209	.0030	.1471	-.1132	.0397	-.1568	-.0995	-.3302	-.2735	-.3408	-.3103	-.2319	-.3321
.80	-.2162	-.1030	-.2271	-.1617			-.3307	-.2593	-.3404	-.2846	-.3169	-.3206	-.2552	-.2589
.90	-.1828	-.1498	-.2642	-.2010	-.2854	-.1715	-.3021	-.2354	-.3046	-.2890	-.3010	-.2952	-.3179	-.2723
.95	-.1742	-.1648	-.2595	-.2079			-.2782	-.2207	-.2937	-.2873	-.2985	-.2822	-.3364	-.2807

TAIL 1

	Cp at y/b of													
	0.02		0.22		0.44		0.56		0.67		0.83		0.98	
x/c	U.S.	L.S.	U.S.	L.S.	U.S.	L.S.	U.S.	L.S.	U.S.	L.S.	U.S.	L.S.	U.S.	L.S.
.05	.1569	.1931	.2683	.5016			.3059	.6265			.3218	.6817	.2783	.5672
.10	.1614	.1915					.4156	.5584	.4102	.5684			.3818	.4959
.15					.3252	.4509	.3815	.5085	.4057	.5440	.4623	.5673	.3663	.4213
.20	.1180	.1642					.3516	.4664	.3594	.5018			.3258	.3546
.25	-.0126	.0086	-.0217	.2426	.2796	.3874	.3306	.4253	.3529	.4604	.3875	.4993	.2910	.3014
.30			-.1427	-.0915			.3034	.3524	.3334	.4129	.3713	.4660	.2623	.2675
.40	.0396	.1346							-.0979	-.0497	.3014	.3266	.2312	.2077
.50					-.1079	-.0527	-.1020	-.0484	-.1109	-.0592	-.1061	-.0827	.1365	.0593
.60	.0121	.0280	-.0078	.0796			-.1096	-.0554	-.1113	-.0562	-.1858	-.1754	-.3176	-.3129
.70					-.1195	-.0507	-.2431	-.2172	-.3140	-.2737	-.3376	-.3171	-.3338	-.3042
.80	-.1931	-.1896	-.2531	-.2222	-.3025	-.2460	-.3327	-.2872			-.3102	-.3196		
.90	-.1886	-.1757	-.2814	-.2398	-.2938	-.2321	-.3034	-.2812	-.2852	-.2908	-.2950	-.2901	-.3062	-.2588
.95			-.2659	.2466	-.2717	-.2251	-.2857	-.2728	-.2895	-.2982	-.2956	-.2822	-.2750	-.2506

TAIL 2

TABLE IV. - CONTINUED

(e) α = 4.74°

	Cp at y/b of													
	0.02		0.22		0.44		0.56		0.67		0.83		0.98	
x/c	U.S.	L.S.	U.S.	L.S.	U.S.	L.S.	U.S.	L.S.	U.S.	L.S.	U.S.	L.S.	U.S.	L.S.
.05	.0559	.4371	.0645	.6802	.0146	.7909	.0098	.8507	-.1060	.8828				.8530
.10	.0397	.3913	.0910	.6200	.1352	.7103			.1114	.7796	.0875	.8021	-.0874	.6883
.15	.0359	.4002	.0931	.5575	.1402	.6458			.0943	.7054			.1044	.5562
.20	.0522	.3764	.0986	.5086	.1403	.5891	.1697	.6175	.1439	.6512	.1468	.6855	.1154	.4829
.25					.1310	.5235	.1672	.5677	.1732	.5972	.1362	.6463	.1376	.4120
.30	-.0891	.0706							.1656	.5443	.1339	.5763	.1442	.3505
.40	-.0094	.3260	-.1564	.0419	-.1629	-.0057	-.1644	-.0081	-.1420	-.0151	.1615	.4390	.1336	.2786
.50			-.1305	.1816	-.1700	.0107	-.1718	.0054			-.1496	-.0498	.1238	.1608
.60					-.1721	.0579	-.1614	.0214			-.1892	-.0866	-.3060	-.3217
.70	-.0216	.1813	-.0417	.2116	-.1640	.2061	-.1953	-.0495	-.3523	-.2483	-.3563	-.2924	-.2668	-.3171
.80	-.2269	-.0572	-.2613	-.1309			-.3544	-.1738	-.3461	-.2556	-.3232	-.3018	-.2865	-.2629
.90	-.1991	-.1233	-.2904	-.1692	-.3046	-.1323	-.3163	-.1419	-.3184	-.2419	-.3161	-.2922	-.3579	-.2532
.95	-.1770	-.1368	-.2610	-.1757			-.2823	-.1438	-.3036	-.2378	-.3095	-.2821	-.3459	-.2686

TAIL 1

	Cp at y/b of													
	0.02		0.22		0.44		0.56		0.67		0.83		0.98	
x/c	U.S.	L.S.	U.S.	L.S.	U.S.	L.S.	U.S.	L.S.	U.S.	L.S.	U.S.	L.S.	U.S.	L.S.
.05	.2116	.1668	.1847	.4781			.1803	.6391			.1821	.6993	.1385	.5987
.10	.2004	.1550					.3470	.5661	.3134	.5762			.2651	.5165
.15					.2777	.4632	.3394	.5127	.3526	.5471	.4126	.5803	.3420	.4302
.20	.1440	.1210					.3119	.4708	.3258	.5032			.3167	.3533
.25	-.0207	-.0026	-.0641	.2280	.2540	.3895	.2985	.4273	.3216	.4589	.3488	.5036	.2859	.2937
.30			-.1752	-.1071			.2721	.3505	.3030	.4083	.3386	.4693	.2501	.2530
.40	.0049	.1254							-.1125	-.0518	.2747	.3278	.2102	.1859
.50					-.1270	-.0441	-.1209	-.0407	-.1284	-.0547	-.1179	-.0777	.1107	.0341
.60	-.0322	.0215	-.0501	.0735			-.1322	-.0447	-.1322	-.0480	-.1984	-.1671	-.3304	-.3222
.70					-.1326	-.0138	-.2603	-.2079	-.3274	-.2666	-.3487	-.3092	-.3520	-.3342
.80	-.2245	-.1959	-.2790	-.2323	-.3072	-.2223	-.3457	-.2732			-.3171	-.3219		
.90	-.2150	-.1783	-.3002	-.2482	-.3118	-.2279	-.3098	-.2557	-.2944	-.2813	-.3033	-.3077	-.3037	-.2550
.95			-.2670	-.2572	-.2854	-.2292	-.2916	-.2512	-.2995	-.2955	-.3026	-.2952	-.2767	-.2459

TAIL 2

TABLE IV. - CONTINUED

(f) α = 6.76°

	Cp at y/b of													
	0.02		0.22		0.44		0.56		0.67		0.83		0.98	
x/c	U.S.	L.S.	U.S.	L.S.	U.S.	L.S.	U.S.	L.S.	U.S.	L.S.	U.S.	L.S.	U.S.	L.S.
.05	-.0381	.5394	-.0393	.7934	-.1188	.8737	-.0986	.9303	-.1999	.9728				.9149
.10	-.0304	.4867	-.0051	.7102	-.0002	.7874			.0199	.8505	-.0301	.8677	-.1686	.7348
.15	-.0421	.4954	.0003	.6425	.0408	.7167			.0014	.7740			-.0434	.6039
.20	-.0133	.4744	-.0005	.5828	.0427	.6502	.0765	.6834	.0420	.7135	.0477	.7407	.0570	.5271
.25					.0449	.5728	.0715	.6207	.0728	.6531	.0317	.6957	.0686	.4517
.30	-.1522	.1328							.0725	.5904	.0320	.6179	.0854	.3893
.40	-.0551	.4064	-.2092	.1157	-.2151	.0319	-.2095	.0227	-.1860	.0074	.0580	.4687	.0866	.3098
.50			-.1917	.2996	-.2243	.0957	-.2179	.0606			-.1991	-.0303	.0759	.1828
.60					-.2240	.2283	-.2055	.1106			-.2298	-.0577	-.3210	-.3237
.70	-.0481	.2379	-.0749	.2776	-.2198	.3141	-.2455	.0939	-.3767	-.2072	-.3635	-.2690	-.3115	-.3063
.80	-.2332	-.0162	-.2799	-.0935			-.3542	-.0854	-.3456	-.1832	-.3384	-.2747	-.3847	-.2985
.90	-.2086	-.0869	-.3038	-.1339	-.3200	-.1073	-.3267	-.1098	-.3304	-.1441	-.3317	-.2724	-.3837	-.2464
.95	-.1704	-.0974	-.2516	-.1391			-.2913	-.1203	-.3114	-.1385	-.3211	-.2722	-.3635	-.2625

TAIL 1

	Cp at y/b of													
	0.02		0.22		0.44		0.56		0.67		0.83		0.98	
x/c	U.S.	L.S.	U.S.	L.S.	U.S.	L.S.	U.S.	L.S.	U.S.	L.S.	U.S.	L.S.	U.S.	L.S.
.05	.3492	.1727	.2015	.4013			.0835	.6547			.0684	.7143	.0375	.6126
.10	.2928	.1513					.2345	.5807	.2092	.5866			.1358	.5314
.15					.2424	.4781	.2853	.5239	.2595	.5539	.3429	.5886	.2331	.4343
.20	.1997	.1293					.2660	.4768	.2759	.5081			.2534	.3579
.25	-.0403	-.0615	-.1256	.1772	.2109	.3975	.2502	.4315	.2740	.4619	.2913	.5052	.2516	.2927
.30			-.1237	-.1342			.2208	.3498	.2542	.4069	.2783	.4686	.2222	.2507
.40	-.0090	.1514							-.1373	-.0514	.2282	.3217	.1771	.1722
.50					-.1556	-.0391	-.1478	-.0305	-.1520	-.0466	-.1386	-.0732	.0841	.0146
.60	-.0637	.0148	-.0833	.0630			-.1520	-.0354	-.1492	-.0351	-.2148	-.1582	-.3421	-.3315
.70					-.1048	.0396	-.2733	-.1941	-.3363	-.2584	-.3530	-.2987	-.3554	-.3360
.80	-.2506	-.2004	-.2882	-.2396	-.3142	-.2030	-.3453	-.2363			-.3231	-.3103		
.90	-.2456	-.1902	-.3021	-.2461	-.3327	-.2308	-.3159	-.2247	-.3026	-.2623	-.3098	-.3060	-.3040	-.2457
.95			-.2707	-.2611	-.2997	-.2309	-.2947	-.2250	-.3047	-.2701	-.3052	-.2982	-.2831	-.2339

TAIL 2

TABLE IV. - CONTINUED

(g) α = 8.76°

	Cp at y/b of													
	0.02		0.22		0.44		0.56		0.67		0.83		0.98	
x/c	U.S.	L.S.	U.S.	L.S.	U.S.	L.S.	U.S.	L.S.	U.S.	L.S.	U.S.	L.S.	U.S.	L.S.
.05	-.1538	.6310	-.1303	.8909	-.2178	.9445	-.1888	1.0005	-.2601	1.0487				.9629
.10	-.0966	.5893	-.0928	.7936	-.0983	.8597			-.0804	.9180	-.1345	.9210	-.2124	.7797
.15	-.1018	.5970	-.0800	.7187	-.0474	.7830			-.0738	.8386			-.1234	.6501
.20	-.0679	.5778	-.0813	.6451	-.0425	.7099	-.0169	.7443	-.0437	.7709	-.0335	.7892	-.0139	.5713
.25					-.0387	.6246	-.0164	.6745	-.0140	.7036	-.0405	.7400	.0233	.4923
.30	-.2121	.2388							-.0114	.6329	-.0543	.6549	.0232	.4278
.40	-.1144	.4830	-.2610	.2870	-.2522	.1023	-.2544	.0619	-.2369	.0282	-.0270	.4962	.0315	.3433
.50			-.2478	.3863	-.2687	.2214	-.2606	.1503			-.2401	-.0090	.0263	.2070
.60					-.2728	.3973	-.2499	.2752			-.2644	-.0232	-.3533	-.3286
.70	-.0833	.3000	-.1452	.3542	-.2753	.3602	-.2888	.2325	-.3707	-.0871	-.3590	-.2386	-.3550	-.3004
.80	-.2456	.0245	-.3135	-.0548			-.3442	-.0621	-.3431	-.0790	-.3500	-.2317	-.4386	-.2852
.90	-.2159	-.0485	-.3113	-.0907	-.3333	-.0736	-.3190	-.0853	-.3287	-.0956	-.3440	-.2127	-.4063	-.2640
.95	-.1625	-.0569	-.1965	-.1019			-.3049	-.0948	-.3178	-.1060	-.3223	-.2094	-.3989	-.2751

TAIL 1

	Cp at y/b of													
	0.02		0.22		0.44		0.56		0.67		0.83		0.98	
x/c	U.S.	L.S.	U.S.	L.S.	U.S.	L.S.	U.S.	L.S.	U.S.	L.S.	U.S.	L.S.	U.S.	L.S.
.05	.4154	.1415	.1874	.3467			-.0201	.6753			-.0268	.7184	-.0469	.6269
.10	.3791	.0721					.1020	.5984	.0980	.5960			.0462	.5492
.15					.1859	.4950	.1817	.5395	.1412	.5625	.2495	.5916	.1088	.4454
.20	.2537	.1378					.2071	.4894	.1713	.5154			.1353	.3672
.25	-.0243	-.0800	-.1360	.1627	.1479	.4045	.2047	.4378	.2167	.4666	.2231	.5014	.1434	.3011
.30			-.1102	-.1210			.1813	.3528	.2137	.4086	.2328	.4634	.1600	.2579
.40	.0012	.1114							-.1570	-.0502	.1899	.3177	.1634	.1732
.50					-.1579	-.0284	-.1829	-.0233	-.1782	-.0361	-.1565	-.0679	.0743	.0068
.60	-.0731	.0001	-.0998	.0600			-.1797	-.0132	-.1807	-.0190	-.2257	-.1462	-.3527	-.3399
.70					-.1068	.0910	-.2601	-.1535	-.3546	-.2491	-.3598	-.2866	-.3490	-.3307
.80	-.2827	-.2238	-.3150	-.2407	-.3184	-.2016	-.3290	-.2019			-.3262	-.2957		
.90	-.2707	-.2033	-.3258	-.2496	-.3355	-.2353	-.3310	-.2122	-.3114	-.2296	-.3148	-.2990	-.3123	-.2614
.95			-.2926	-.2565	-.3031	-.2367	-.3023	-.2200	-.3072	-.2365	-.3085	-.3015	-.3037	-.2337

TAIL 2

TABLE IV. - CONTINUED

(h) α = 10.75°

	Cp at y/b of													
	0.02		0.22		0.44		0.56		0.67		0.83		0.98	
x/c	U.S.	L.S.	U.S.	L.S.	U.S.	L.S.	U.S.	L.S.	U.S.	L.S.	U.S.	L.S.	U.S.	L.S.
.05	-.2339	.7248	-.2153	.9739	-.2893	1.0142	-.2658	1.0622	-.3210	1.0980				.9920
.10	-.1409	.6983	-.1753	.8723	-.1763	.9310			-.1722	.9719	-.2224	.9700	-.2672	.8185
.15	-.1408	.7122	-.1575	.7922	-.1298	.8484			-.1419	.8921			-.1828	.6929
.20	-.1096	.6830	-.1552	.7089	-.1207	.7689	-.0876	.7980	-.1217	.8209	-.1101	.8329	-.0935	.6126
.25					-.1096	.6738	-.0923	.7210	-.0949	.7494	-.0990	.7817	-.0267	.5333
.30	-.2567	.3776							-.0933	.6728	-.1116	.6340	-.0210	.4703
.40	-.1696	.5513	-.3060	.4807	-.3052	.1952	-.2956	.1353	-.2837	.0569	-.0955	.5257	-.0272	.3812
.50			-.2955	.4566	-.3102	.4740	-.3051	.3256			-.2786	.0190	-.0276	.2362
.60					-.3136	.4592	-.2891	.4562			-.2978	.0270	-.3720	-.3235
.70	-.1304	.3629	-.2528	.4410	-.3195	.4136	-.3259	.2615	-.3425	-.0385	-.3558	-.1457	-.3989	-.3006
.80	-.2628	.0690	-.3482	-.0252			-.3331	-.0386	-.3351	-.0564	-.3614	-.1057	-.4518	-.2686
.90	-.2250	-.0132	-.3101	-.0566	-.3362	-.0408	-.3175	-.0605	-.3284	-.0709	-.3602	-.1012	-.4236	-.2463
.95	-.1590	-.0191	-.1628	-.0682			-.3124	-.0672	-.3237	-.0795	-.3348	-.1113	-.4164	-.2424

TAIL 1

	Cp at y/b of													
	0.02		0.22		0.44		0.56		0.67		0.83		0.98	
x/c	U.S.	L.S.	U.S.	L.S.	U.S.	L.S.	U.S.	L.S.	U.S.	L.S.	U.S.	L.S.	U.S.	L.S.
.05	.3655	.1475	.1872	.2112			-.1108	.6938			-.1070	.7221	-.1230	.6322
.10	.4199	.0941					-.0207	.6180	.0015	.6124			-.0356	.5625
.15					.1146	.5002	.1010	.5572	.0451	.5754	.1057	.5964	.0216	.4515
.20	.3132	.0322					.1305	.5032	.0795	.5239			.0531	.3715
.25	.0020	-.1157	-.1394	.1178	.0657	.4011	.1275	.4514	.1294	.4719	.0940	.5085	.0600	.3012
.30			-.1345	-.0864			.1045	.3641	.1439	.4152	.1338	.4663	.0591	.2529
.40	.0109	.0420							-.1922	-.0372	.1291	.3084	.0854	.1654
.50					-.1115	.0432	-.2090	.0067	-.2130	-.0082	-.1833	-.0627	.0459	-.0028
.60	-.0762	-.0199	-.0959	.0559			-.1550	.0445	-.2142	.0113	-.2500	-.1336	-.3631	-.3472
.70					-.1181	.0996	-.2396	-.1110	-.3665	-.2215	-.3594	-.2730	-.3493	-.3224
.80	-.2918	-.2494	-.3248	-.2482	-.3152	-.1967	-.3237	-.1953			-.3348	-.2833		
.90	-.2885	-.2283	-.3425	-.2813	-.3294	-.2329	-.3344	-.2139	-.3192	-.2085	-.3220	-.2846	-.3125	-.2914
.95			-.3095	-.2806	-.2977	-.2378	-.3047	-.2245	-.3050	-.2251	-.3090	-.2879	-.2989	-.2784

TAIL 2

TABLE IV. - CONTINUED

(i) α = 12.75°

	Cp at y/b of													
	0.02		0.22		0.44		0.56		0.67		0.83		0.98	
x/c	U.S.	L.S.	U.S.	L.S.	U.S.	L.S.	U.S.	L.S.	U.S.	L.S.	U.S.	L.S.	U.S.	L.S.
.05	-.3030	.8148	-.2920	1.0503	-.3441	1.0332	-.3279	1.1151	-.3624	1.1389				1.0263
.10	-.1857	.2060	-.2489	.9476	-.2620	.9323			-.2712	1.0274	-.2893	1.0224	-.3188	.8631
.15	-.1862	.8244	-.2251	.8616	-.2121	.8833			-.2156	.9463			-.2481	.7375
.20	-.1438	.7844	-.2185	.7671	-.1917	.8243	-.1671	.3538	-.1909	.8749	-.1837	.8852	-.1768	.6567
.25					-.1760	.7221	-.1674	.7701	-.1607	.8013	-.1639	.9306	-.0858	.5787
.30	-.2903	.5585							-.1550	.7192	-.1647	.7501	-.0659	.5132
.40	-.2021	.6156	-.3417	.5673	-.3472	.4664	-.3338	.2820	-.3233	.2303	-.1552	.5632	-.0812	.4197
.50			-.3336	.5384	-.3517	.5403	-.3422	.5367			-.3201	.1600	-.0908	.2645
.60					-.3517	.5233	-.3264	.5181			-.3325	.2465	-.3930	-.3052
.70	-.1835	.4166	-.3155	.5062	-.3489	.4732	-.3471	.2994	-.3354	-.0288	-.3612	-.0405	-.4312	-.2664
.80	-.2903	.1066	-.3876	-.0003			-.3351	-.0081	-.3329	-.0330	-.3734	-.0675	-.4588	-.1791
.90	-.2413	.0250	-.3109	-.0222	-.3325	-.0127	-.3198	-.0270	-.3271	-.0441	-.3687	-.0734	-.4625	-.1401
.95	-.1820	.0103	-.1820	-.0321			-.3154	-.0374	-.3253	-.0526	-.3393	-.0876	-.4646	-.1539

TAIL 1

	Cp at y/b of													
	0.02		0.22		0.44		0.56		0.67		0.83		0.98	
x/c	U.S.	L.S.	U.S.	L.S.	U.S.	L.S.	U.S.	L.S.	U.S.	L.S.	U.S.	L.S.	U.S.	L.S.
.05	.3225	.1448	.2230	.0247			-.1787	.7074			-.1930	.7135	-.1954	.6281
.10	.3532	.0874					-.0595	.6327	-.0941	.6371			-.1110	.5849
.15					.0674	.4925	.0049	.5723	-.0409	.5970	.0232	.5953	-.0640	.4748
.20	.3393	.0364					.0442	.5197	.0171	.5411			-.0320	.3945
.25	.0230	-.1511	-.1102	.1302	-.0046	.3974	.0424	.4832	.0642	.4832	-.0125	.5003	-.0176	.3216
.30			-.1326	-.0765			.0198	.3659	.0634	.4172	.0301	.4578	-.0107	.2730
.40	.0352	-.0501							-.2403	-.0373	.0635	.3135	.0012	.1824
.50					-.1314	.0351	-.1819	.0621	-.2453	.0031	-.2206	-.0365	.0018	.0092
.60	-.0471	-.0603	-.0596	.0490			-.1284	.0816	-.2185	.0550	-.2796	-.0944	-.3712	-.3459
.70					-.1574	.0964	-.2479	-.1308	-.3415	-.1870	-.3456	-.2426	-.3430	-.3141
.80	-.3001	-.2676	-.3244	-.2559	-.3327	-.2016	-.3316	-.2016			-.3429	-.2397		
.90	-.2932	-.2588	-.3485	-.2985	-.3401	-.2359	-.3317	-.2096	-.3195	-.2030	-.3190	-.2377	-.3064	-.2712
.95			-.3203	-.3087	-.3156	-.2433	-.3012	-.2151	-.2982	-.2140	-.2984	-.2446	-.2784	-.2615

TAIL 2

TABLE IV. - CONTINUED

(j) $\alpha = 16.76°$

	Cp at y/b of													
	0.02		0.22		0.44		0.56		0.67		0.83		0.98	
x/c	U.S.	L.S.	U.S.	L.S.	U.S.	L.S.	U.S.	L.S.	U.S.	L.S.	U.S.	L.S.	U.S.	L.S.
.05	-.3870	.8427	-.4115	1.1802	-.4192	1.1840	-.4162	1.2139	-.4312	1.2366				1.0845
.10	-.3089	.9627	-.3730	1.0918	-.3923	1.1227			-.3929	1.1472	-.3967	1.1281	-.4025	.9472
.15	-.2669	1.0141	-.3441	1.0051	-.3397	1.0439			-.3446	1.0723			-.3835	.8334
.20	-.2067	.9561	-.3302	.9068	-.3192	.9617	-.2815	.9878	-.3168	1.0055	-.3290	.9995	-.3306	.7571
.25					-.3041	.8633	-.2971	.9081	-.2897	.9355	-.3104	.9440	-.2314	.6802
.30	-.3360	.8632							-.2704	.8568	-.2928	.8548	-.2290	.6151
.40	-.2348	.7755	-.3953	.7222	-.4119	.7069	-.4021	.6224	-.3881	.5257	-.2719	.6727	-.2441	.5188
.50			-.3859	.6913	-.4127	.6873	-.4072	.6772			-.3860	.4363	-.3298	.3490
.60					-.4106	.6562	-.3788	.6414			-.3893	.4377	-.4464	-.1628
.70	-.2346	.5168	-.3761	.6169	-.3875	.5658	-.3734	.3686	-.3674	.0223	-.3831	.0002	-.4451	-.1329
.80	-.3243	.1796	-.4317	.0607			-.3411	.0342	-.3556	.0135	-.3794	-.0162	-.4857	-.1219
.90	-.2728	.0993	-.3699	.0332	-.3557	.0389	-.3385	.0223	-.3455	.0093	-.3705	-.0232	-.4842	-.1175
.95	-.2586	.0763	-.2983	.0294			-.3357	.0156	-.3416	.0020	-.3650	-.0292	-.4819	-.1420

TAIL 1

	Cp at y/b of													
	0.02		0.22		0.44		0.56		0.67		0.83		0.98	
x/c	U.S.	L.S.	U.S.	L.S.	U.S.	L.S.	U.S.	L.S.	U.S.	L.S.	U.S.	L.S.	U.S.	L.S.
.05	.2081	.1447	.4575	.0864			-.1908	.4768			-.2845	.7387	-.3409	.6666
.10	.2220	.1012					-.0917	.4785	-.2189	.6215			-.3214	.6371
.15					-.0591	.2489	-.0782	.4573	-.1623	.5846	-.0908	.6303	-.2795	.5203
.20	.2246	.0623					-.0979	.4230	-.1047	.5297			-.1915	.4391
.25	-.0220	-.1209	.0062	.0381	-.1053	.2416	-.1265	.3758	-.0763	.4740	-.1297	.5455	-.1263	.3609
.30			-.1015	-.2004			-.1653	.2827	-.0852	.4103	-.1244	.4992	-.0978	.3107
.40	.0594	-.0763							-.2772	.0205	-.1516	.3349	-.0858	.2131
.50					-.2007	-.0094	-.2315	.0780	-.2285	.1091	-.2747	.0499	-.1480	.0272
.60	-.0188	-.1766	-.0524	-.1016			-.2173	.0719	-.2112	.1269	-.3138	.0258	-.4222	-.3322
.70					-.1035	-.0257	-.3120	-.1486	-.3538	-.1693	-.3967	-.1741	-.4051	-.2927
.80	-.2815	-.3454	-.2831	-.2910	-.3041	-.2299	-.3673	-.2271			-.3892	-.1967		
.90	-.2870	-.3380	-.3208	-.3379	-.3426	-.2476	-.3688	-.2300	-.3322	-.2124	-.3404	-.2094	-.2924	-.2700
.95			-.3317	-.3422	-.3362	-.2545	-.3429	-.2284	-.3084	-.2309	-.3024	-.2202	-.2513	-.2513

TAIL 2

TABLE IV. - CONCLUDED
(k) α = 19.75°

	Cp at y/b of													
	0.02		0.22		0.44		0.56		0.67		0.83		0.98	
x/c	U.S.	L.S.	U.S.	L.S.	U.S.	L.S.	U.S.	L.S.	U.S.	L.S.	U.S.	L.S.	U.S.	L.S.
.05	-.4253	.6846	-.4443	1.2356	-.4436	1.2292	-.4474	1.2574	-.4513	1.2653				1.0981
.10	-.3744	.9641	-.4266	1.1607	-.4336	1.1757			-.4526	1.1360	-.4324	1.1665	-.4339	.9764
.15	-.3168	1.0603	-.3953	1.0796	-.3068	1.1016			-.4223	1.1059			-.4247	.9666
.20	-.2457	1.0187	-.3740	.9848	-.3712	1.0257	-.3514	1.0513	-.3694	1.0610	-.3838	1.0434	-.3937	.7951
.25					-.3530	.9348	-.3523	[illegible]	-.3403	.9934	-.3527	.9865	-.2998	[illegible]
.30	-.3676	.9855							-.3313	.8147	-.3462	.8022	-.3045	.6595
.40	-.3821	[illegible]	-.4171	.7982	-.4404	.7641	-.4324	.7065	-.4155	.5150	-.3297	.7353	-.3466	.6556
.50			-.4093	.7562	-.4365	[illegible]	-.4336	.7293			-.3921	.5213	-.4021	.3595
.60					-.4144	.7028	-.4051	.3858			-.3970	.4555	-.4713	-.1259
.70	-.2487	.0726	-.3894	.6681	-.3955	.5944	-.4036	.3865	-.3788	.0361	-.3745	.0212	-.4830	-.1120
.80	-.3403	.1981	-.4292	.0608			-.3751	.0522	-.3734	.0331	-.3752	.0098	-.4794	-.0992
.90	-.2931	.1257	-.3788	.0392	-.3601	.0676	-.3580	.0469	-.3614	.0341	-.3815	.0054	-.4673	-.0935
.95	-.2825	.1161	-.3338	.0453			-.3511	.0424	-.3528	.0290	-.3791	-.0013	-.4474	-.1134

TAIL 1

	Cp at y/b of													
	0.02		0.22		0.44		0.56		0.67		0.83		0.98	
x/c	U.S.	L.S.	U.S.	L.S.	U.S.	L.S.	U.S.	L.S.	U.S.	L.S.	U.S.	L.S.	U.S.	L.S.
.05	.1968	.1404	.4556	.0702			-.1248	.3103			-.3276	.7152	-.3503	.6555
.10	.2120	.1009					-.0882	.3189	-.2340	.5094			-.3525	.6555
.15					-.0298	.1625	-.1008	.3202	-.1604	.4906	-.1934	.6336	-.3462	.5490
.20	.2205	.0614					-.1263	.2963	-.1370	.4499			-.2882	.4677
.25	-.0261	-.1254	.0036	.0455	-.0784	.1512	-.1603	.2644	-.1437	.3949	-.2561	.5347	-.2284	.3934
.30			-.1048	-.2033			-.2019	.1883	-.1613	.3402	-.2446	.4910	-.1955	.3431
.40	.0548	-.1026							-.2994	-.0006	-.2229	.3290	-.1825	.2406
.50					-.2021	-.0874	-.2597	.0163	-.2576	.0891	-.3063	.0806	-.2369	.0510
.60	-.0197	-.2208	-.0518	-.1605			-.2362	.0152	-.2418	.0960	-.3216	.0505	-.4237	-.3019
.70					-.1336	-.0804	-.3133	-.1843	-.3699	-.1878	-.3960	-.1663	-.4130	-.2720
.80	-.2792	-.3617	-.2849	-.3305	-.3209	-.2708	-.3705	-.2546			-.3921	-.1945		
.90	-.2813	-.3691	-.3212	-.3672	-.3528	-.2729	-.3751	-.2638	-.3545	-.2277	-.3482	-.2099	-.3142	-.2754
.95			-.3343	-.3583	-.3452	-.2762	-.3538	-.2601	-.3307	-.2467	-.3090	-.2213	-.2734	-.2792

TAIL 2

TABLE V. - PRESSURE COEFFICIENTS, $\phi = 90°$, $\delta = 0°$, $M = 1.60$

(a) $\alpha = -3.30°$

	Cp at y/b of													
	0.02		0.22		0.44		0.56		0.67		0.83		0.98	
x/c	U.S.	L.S.	U.S.	L.S.	U.S.	L.S.	U.S.	L.S.	U.S.	L.S.	U.S.	L.S.	U.S.	L.S.
.05	.3064	.1343	.5453	.2141	.6634	.2152	.6788	.2454	.6236	.1671			[illegible]	.3319
.10	.2972	.2835	.4750	.2278	.5666	.3174			.5963	.3757	.5524	.3111	.5931	.3037
.15	.2823	.2987	.4320	.2191	.5138	.3003			.5660	.3735			.4661	.3268
.20	.2548	.1041	.3931	.2081	.4713	.2763	.4762	.3077	.5405	.3468	.5657	.3761	.4073	.3095
.25					.4247	.2472	.4652	.2667	.5146	.3211	.5335	.3372	.3441	.2704
.30	.0969	-.0154							.4635	.2857	.4930	.3091	.2927	.2331
.40	.1690	-.0125	.0372	-.1555	-.0176	-.1375	-.0175	-.1218	-.0222	-.1171	.3949	.2637	.2444	.2043
.50			.1236	-.1209	-.0012	-.1503	-.0115	-.1389			-.0527	-.1144	.1807	.1436
.60					.0567	-.1453	-.0190	-.1418			-.0847	-.1754	-.3051	-.3071
.70	.1527	-.0285	.1764	-.0366	.1295	-.1459	-.0234	-.2025	-.2605	-.3409	-.2971	-.3513	-.3033	-.2592
.80	-.1755	-.2082	-.1518	-.2732			-.1895	-.3433	-.2643	-.3361	-.3087	-.3134	-.2370	-.2856
.90	-.1320	-.2037	-.1954	-.2965	-.1456	-.3031	-.1442	-.3065	-.2478	-.3062	-.3050	-.3117	-.2582	-.3445
.95	-.1438	-.1720	-.2056	-.2627			-.1406	-.2884	-.2474	-.3002	-.2956	-.3006	-.2528	-.3518

TAIL 1

	Cp at y/b of													
	0.02		0.22		0.44		0.56		0.67		0.83		0.98	
x/c	U.S.	L.S.	U.S.	L.S.	U.S.	L.S.	U.S.	L.S.	U.S.	L.S.	U.S.	L.S.	U.S.	L.S.
.05	.1883	.2889	.3522	.5015			.4191	.6407			.4612	.6873	.4190	.5370
.10	.2003	.2563					.5055	.5717	.5113	.5907			.4699	.5080
.15					.4180	.4746	.4662	.5254	.5018	.5688	.3627	.5904	.4149	.4365
.20	.1803	.2376					.4335	.4894	.4468	.5295			.3758	.3857
.25	-.0503	-.0163	.0214	.2698	.3626	.4077	.4049	.4535	.4336	.4915	.4621	.5257	.3537	.3408
.30			-.1168	-.0753			.3704	.3857	.4127	.4452	.4450	.4846	.3317	.3174
.40	.0391	.1016							-.0588	-.0331	.3579	.3406	.3048	.2664
.50					-.0850	-.0526	-.0770	-.0454	-.0786	-.0554	-.0870	-.0803	.2075	.1314
.60	.1073	.0964	.0575	.0733			-.0862	-.0608	-.0815	-.0586	-.1720	-.1806	-.2893	-.2791
.70					-.1024	-.0799	-.2278	-.2235	-.3013	-.2817	-.3343	-.3161	-.2365	-.2284
.80	-.1276	-.1474	-.1804	-.1724	-.3003	-.2746	-.3191	-.2958			-.3016	-.2858		
.90	-.1407	-.1332	-.2046	-.1954	-.2736	-.2516	-.2833	-.2718	-.2703	-.2573	-.2977	-.2734	-.3459	-.2926
.95			-.2143	-.1908	-.2425	-.2178	-.2703	-.2575	-.2812	-.2663	-.2925	-.2721	-.3330	-.2927

TAIL 2

TABLE V. - CONTINUED
(b) α = -1.30°

	Cp at y/b of													
	0.02		0.22		0.44		0.55		0.67		0.83		0.98	
x/c	U.S.	L.S.	U.S.	L.S.	U.S.	L.S.	U.S.	L.S.	U.S.	L.S.	U.S.	L.S.	U.S.	L.S.
.05	.2235	.1876	.4502	.3331	.5322	.5095	.5643	.4887	.4322	.4493				.3439
.10	.2164	.1510	.3814	.3367	.4719	.4368			.4911	.5132	.5659	.5193	.5540	.5011
.15	.2071	.1621	.3456	.3019	.4234	.3970			.4500	.4693			.4140	.3866
.20	.1848	.1513	.3148	.2909	.3909	.3621	.4472	.3732	.4321	.4403	.4783	.4496	.3623	.3337
.25					.3567	.3285	.4004	.3566	.4401	.3908	.4607	.4305	.3060	.2928
.30	.0631	.0224							.4040	.3615	.4328	.4027	.2634	.2572
.40	.1197	.0485	-.0385	-.1196	-.0487	-.1048	-.0511	-.0853	-.0415	-.0816	.3557	.3319	.2348	.2035
.50			.0349	-.0715	-.0546	-.1096	-.0506	-.1057			-.0758	-.0942	.1734	.1515
.60					-.0203	-.1046	-.0405	-.1073			-.1083	-.1543	-.2919	-.3051
.70	.0938	.0108	.1166	.0140	.0118	-.1065	-.0838	-.1684	-.2859	-.3204	-.3137	-.3403	-.2712	-.2919
.80	-.1890	-.1805	-.1813	-.2400			-.2693	-.3223	-.2962	-.3299	-.3192	-.3112	-.2518	-.2744
.90	-.1526	-.1906	-.2191	-.2638	-.1745	-.2780	-.2514	-.2900	-.2962	-.2921	-.2875	-.3017	-.2487	-.3043
.95	-.1578	-.1814	-.2296	-.2541			-.2356	-.2731	-.2885	-.2840	-.2800	-.2971	-.2535	-.2845

TAIL 1

	Cp at y/b of													
	0.02		0.22		0.44		0.56		0.67		0.83		0.98	
x/c	U.S.	L.S.	U.S.	L.S.	U.S.	L.S.	U.S.	L.S.	U.S.	L.S.	U.S.	L.S.	U.S.	L.S.
.05	.1822	.2593	.3450	.4837			.4282	.6193			.4516	.5665	.4299	.5307
.10	.1905	.2394					.4912	.5516	.4970	.5668			.4533	.4904
.15					.4071	.4574	.4532	.5081	.4770	.5498	.4792	.5820	.3574	.4201
.20	.1751	.2190					.4193	.4744	.4273	.5115			.3625	.3663
.25	-.0330	-.0117	.0187	.2585	.3489	.3935	.3902	.4376	.4141	.4715	.4491	.5075	.3355	.3139
.30			-.1160	-.0789			.3542	.3701	.3932	.4252	.4314	.4717	.3145	.2941
.40	.0526	.1224							-.0667	-.0425	.3458	.3238	.2829	.2416
.50					-.0876	-.0552	-.0824	-.0515	-.0848	-.0626	-.0937	-.0845	.1925	.1035
.60	.0745	.0625	.0502	.0757			-.0897	-.0654	-.0880	-.0633	-.1757	-.1824	-.2376	-.2505
.70					-.0959	-.0701	-.2283	-.2250	-.3033	-.2827	-.3336	-.3178	-.2850	-.2438
.80	-.1499	-.1655	-.2052	-.1978	-.2929	-.2703	-.3186	-.2947			-.3012	-.2904		
.90	-.1539	-.1556	-.2275	-.2201	-.2716	-.2446	-.2887	-.2698	-.2738	-.2686	-.2917	-.2756	-.3225	-.2774
.95			-.2304	-.2122	-.2479	-.2161	-.2751	-.2551	-.2832	-.2671	-.2904	-.2744	-.3333	-.2743

TAIL 2

TABLE V. - CONTINUED

(c) α = 0.72°

	Cp at y/b of													
	0.02		0.22		0.44		0.56		0.67		0.83		0.98	
x/c	U.S.	L.S.	U.S.	L.S.	U.S.	L.S.	U.S.	L.S.	U.S.	L.S.	U.S.	L.S.	U.S.	L.S.
.05	.1533	.2445	.3326	.4681	.3363	.6045	.3404	.5511	.2503	.5831				.5357
.10	.1460	.2187	.2955	.4313	.3790	.5352			.3973	.5186	.4271	.5510	.4742	.5523
.15	.1435	.2036	.2651	.3991	.3372	.4854			.3444	.5614			.3602	.5425
.20	.1348	.2055	.2439	.3397	.3146	.4469	.3607	.4600	.3579	.5163	.3338	.5453	.3264	.3737
.25					.2850	.4040	.3372	.4455	.3517	.4684	.3232	.5257	[illegible]	.3223
.30	.0274	.0462							.3351	.4338	.3510	.4757	.2478	.2923
.40	.0781	.1434	-.0857	-.0781	-.0834	-.0704	-.0892	-.0564	-.0662	-.0552	.3063	.3754	.2172	.2350
.50			-.0354	-.0333	-.0933	-.0699	-.0833	-.0693			-.0929	-.0825	.1571	.1511
.60					-.0872	-.0615	-.0831	-.0671			-.1274	-.1345	-.2837	-.3145
.70	.0426	.0574	.0522	.0785	-.0629	-.0503	-.1170	-.1320	-.3062	-.2972	-.3269	-.3275	-.2571	-.3066
.80	-.2036	-.1455	-.2099	-.2000			-.3057	-.2958	-.3190	-.3087	-.3183	-.3223	-.2610	-.2743
.90	-.1725	-.1730	-.2441	-.2314	-.2363	-.2234	-.3007	-.2737	-.3081	-.3038	-.2922	-.2924	-.2854	-.2815
.95	-.1707	-.1817	-.2496	-.2358			-.2750	-.2568	-.2847	-.2825	-.2887	-.2872	-.2929	-.2912

TAIL 1

	Cp at y/b of													
	0.02		0.22		0.44		0.56		0.67		0.83		0.98	
x/c	U.S.	L.S.	U.S.	L.S.	U.S.	L.S.	U.S.	L.S.	U.S.	L.S.	U.S.	L.S.	U.S.	L.S.
.05	.1740	.2214	.3393	.4723			.4562	.5052			.4456	.6533	.4234	.5289
.10	.1866	.2121					.4815	.5392	.4813	.5510			.4381	.4733
.15					.3933	.4442	.4395	.4955	.4529	.5318	.4835	.5673	.3855	.4041
.20	.1531	.1887					.4028	.4628	.4097	.4911			.3455	.3461
.25	-.0174	-.0006	.0138	.2491	.3320	.3830	.3753	.4242	.3925	.4508	.4364	.4875	.3184	.2995
.30			-.1174	-.0858			.3409	.3524	.3741	.4062	.4197	.4547	.2949	.2725
.40	.0601	.1328							-.0755	-.0525	.3351	.3210	.2525	.2233
.50					-.0905	-.0631	-.0855	-.0531	-.0928	-.0705	-.0898	-.0872	.1559	.0836
.60	.0474	.0315	.0326	.0594			-.0947	-.0702	-.0951	-.0685	-.1812	-.1325	-.3102	-.2995
.70					-.0986	-.0677	-.2330	-.2264	-.3067	-.2806	-.3373	-.3211	-.3263	-.2699
.80	-.1692	-.1802	-.2287	-.2166	-.2872	-.2665	-.3221	-.2948			-.3051	-.2951		
.90	-.1772	-.1713	-.2540	-.2368	-.2736	-.2432	-.2970	-.2770	-.2793	-.2776	-.2937	-.2777	-.2974	-.2643
.95			-.2499	-.2332	-.2604	-.2308	-.2797	-.2602	-.2843	-.2733	-.2926	-.2767	-.2772	-.2579

TAIL 2

TABLE V. - CONTINUED

(d) α = 2.70°

Cp at y/b of

	0.02		0.22		0.44		0.56		0.67		0.83		0.98	
x/c	U.S.	L.S.	U.S.	L.S.	U.S.	L.S.	U.S.	L.S.	U.S.	L.S.	U.S.	L.S.	U.S.	L.S.
.05	.1089	.3118	.1733	.5855	.1330	.6889	.1184	.7564	.0039	.6174				.7771
.10	.0903	.2864	.1910	.5286	.2470	.6184			.2121	.7030	.2012	.7246	.0001	.6286
.15	.1004	.2901	.1977	.4750	.2341	.5651			.2189	.6356			.1584	.4989
.20	.0965	.2725	.1733	.4282	.2256	.5206	.2718	.5478	.2514	.6817	.2691	.6150	.2010	.4280
.25					.2109	.4660	.2542	.5130	.2654	.5317	.2552	.5847	.2160	.3609
.30	-.0254	.0661							.2498	.4908	.2500	.5234	.2164	.3056
.40	.0377	.2340	-.1157	-.0231	-.1236	-.0371	-.1260	-.0356	-.0985	-.0392	.2338	.4033	.1987	.2412
.50			-.0823	.0930	-.1292	-.0295	-.1302	-.0336			-.1176	-.0639	.1602	.1464
.60					-.1293	-.0121	-.1164	-.0239			-.1573	-.1124	-.3053	-.3187
.70	-.0033	.1205	-.0096	.1397	-.1162	.0609	-.1552	-.0967	-.3308	-.2751	-.3414	-.3118	-.2311	-.3329
.80	-.2216	-.1123	-.2380	-.1661			-.3312	-.2567	-.3414	-.2847	-.3169	-.3211	-.2537	-.2542
.90	-.1881	-.1548	-.2750	-.2075	-.2876	-.1789	-.3057	-.2275	-.3060	-.2877	-.3011	-.2954	-.3095	-.2708
.95	-.1771	-.1680	-.2630	-.2159			-.2814	-.2112	-.2949	-.2846	-.2983	-.2823	-.3315	-.2792

TAIL 1

Cp at y/b of

	0.02		0.22		0.44		0.56		0.67		0.83		0.98	
x/c	U.S.	L.S.	U.S.	L.S.	U.S.	L.S.	U.S.	L.S.	U.S.	L.S.	U.S.	L.S.	U.S.	L.S.
.05	.1679	.2005	.3328	.4577			.4812	.5873			.4315	.6278	.4392	.5205
.10	.1741	.1920					.4665	.5269	.4582	.5269			.4239	.4602
.15					.3734	.4323	.4157	.4825	.4358	.5081	.4723	.5466	.3714	.3910
.20	.1319	.1601					.3833	.4424	.3963	.4661			.3224	.3315
.25	-.0197	-.0055	.0022	.2360	.3138	.3682	.3566	.4020	.3868	.4264	.4209	.4653	.2955	.2871
.30			-.1278	-.0924			.3262	.3292	.3660	.3825	.4029	.4415	.2685	.2600
.40	.0474	.1131							-.0866	-.0638	.3179	.3173	.2334	.2056
.50					-.0961	-.0727	-.0938	-.0675	-.1035	-.0750	-.1064	-.0868	.1330	.0608
.60	.0234	.0084	.0168	.0408			-.1025	-.0729	-.1054	-.0712	-.1865	-.1832	-.3192	-.3151
.70					-.1083	-.0778	-.2364	-.2283	-.3113	-.2826	-.3417	-.3239	-.3456	-.3011
.80	-.1893	-.1973	-.2454	-.2324	-.2915	-.2706	-.3263	-.2989			-.3102	-.3080		
.90	-.1956	-.1890	-.2707	-.2566	-.2837	-.2545	-.3055	-.2880	-.2856	-.2897	-.2978	-.2859	-.2870	-.2552
.95			-.2687	-.2548	-.2721	-.2415	-.2857	-.2706	-.2899	-.2853	-.2963	-.2831	-.2714	-.2462

TAIL 2

TABLE V. - CONTINUED

(e) α = 4.70°

	Cp at y/b of													
	0.02		0.22		0.44		0.56		0.67		0.83		0.98	
x/c	U.S.	L.S.	U.S.	L.S.	U.S.	L.S.	U.S.	L.S.	U.S.	L.S.	U.S.	L.S.	U.S.	L.S.
.05	.0527	.3986	.0508	.6930	-.0097	.7787	-.0207	.8422	-.1161	.9000				.8494
.10	.0361	.3669	.0811	.6177	.1061	.7006			.0850	.7715	.0522	.7847	-.1155	.6827
.15	.0507	.3767	.0863	.5561	.1203	.6409			.0750	.6977			.0729	.5516
.20	.0619	.3599	.0944	.5080	.1201	.5848	.1448	.6163	.1195	.6401	.1203	.6666	.0914	.4781
.25					.1120	.5186	.1438	.5619	.1514	.5861	.1171	.6314	.1172	.4053
.30	-.0637	.0972							.1457	.5331	.1125	.5629	.1299	.3456
.40	.0047	.3231	-.1512	.0560	-.1684	-.0051	-.1686	-.0120	-.1514	-.0214	.1302	.4290	.1285	.2704
.50			-.1193	.1925	-.1710	.0194	-.1778	.0065			-.1587	-.0533	.1168	.1506
.60					-.1674	.0824	-.1653	.0279			-.1940	-.0851	-.3118	-.3256
.70	-.0414	.1687	-.0508	.1956	-.1576	.2001	-.1992	-.0348	-.3553	-.2463	-.3585	-.2904	-.2737	-.3165
.80	-.2316	-.0750	-.2656	-.1448			-.3549	-.1613	-.3481	-.2484	-.3253	-.2981	-.2804	-.2837
.90	-.2017	-.1372	-.3016	-.1838	-.3089	-.1473	-.3187	-.1516	-.3225	-.2301	-.3173	-.2930	-.3439	-.2492
.95	-.1750	-.1514	-.2611	-.1917			-.2886	-.1553	-.3056	-.2214	-.3084	-.2851	-.3429	-.2641

TAIL 1

	Cp at y/b of													
	0.02		0.22		0.44		0.56		0.67		0.83		0.98	
x/c	U.S.	L.S.	U.S.	L.S.	U.S.	L.S.	U.S.	L.S.	U.S.	L.S.	U.S.	L.S.	U.S.	L.S.
.05	.2080	.2701	.3720	.4894			.4805	.5768			.4328	.5950	.4334	.5147
.10	.2105	.2383					.4611	.5101	.4516	.4939			.4011	.4543
.15					.3668	.4238	.4110	.4592	.4357	.4833	.4592	.5218	.3547	.3864
.20	.1469	.1741					.3820	.4186	.3838	.4447			.3072	.3221
.25	-.0695	-.0530	-.0007	.2291	.3146	.3484	.3533	.3787	.3748	.4099	.4001	.4541	.2796	.2725
.30			-.1281	-.1023			.3152	.3108	.3471	.3693	.3841	.4266	.2521	.2383
.40	-.0011	.0303							-.0955	-.0666	.3029	.3030	.2137	.1800
.50					-.1003	-.0757	-.0995	-.0665	-.1120	-.0775	-.1078	-.0925	.1115	.0350
.60	.0078	.0097	-.0133	.0248			-.1060	-.0741	-.1116	-.0765	-.1880	-.1861	-.3295	-.3218
.70					-.1221	-.0958	-.2378	-.2305	-.3138	-.2871	-.3424	-.3231	-.3568	-.3296
.80	-.2150	-.2197	-.2525	-.2388	-.3208	-.2921	-.3292	-.3039			-.3173	-.3145		
.90	-.2192	-.2093	-.2803	-.2881	-.3016	-.2717	-.3167	-.2942	-.2908	-.2931	-.3002	-.2857	-.2772	-.2513
.95			-.2809	-.2826	-.2821	-.2542	-.2947	-.2749	-.2914	-.2880	-.2982	-.2833	-.2716	-.2413

TAIL 2

ORIGINAL PAGE IS
OF POOR QUALITY

TABLE V. - CONTINUED

(f) α = 6.70°

	Cp at y/b of													
	0.02		0.22		0.44		0.56		0.67		0.83		0.98	
x/c	U.S.	L.S.	U.S.	L.S.	U.S.	L.S.	U.S.	L.S.	U.S.	L.S.	U.S.	L.S.	U.S.	L.S.
.05	-.0213	.4829	-.0647	.7890	-.1414	.8529	-.1389	.9103	-.2091	.9594				.9170
.10	-.0229	.4472	-.0267	.7007	-.0457	.7756			-.0253	.8292	-.0792	.8367	-.1817	.7310
.15	-.0054	.4647	-.0163	.6372	.0115	.7068			-.0325	.7545			-.0759	.6012
.20	.0290	.4515	-.0070	.5786	.0112	.6399	.0254	.6703	.0006	.6937	.0038	.7163	.0108	.5249
.25					.0137	.5518	.0352	.6046	.0355	.6323	.0067	.6768	.0496	.4485
.30	-.0936	.1425							.0365	.5687	.0065	.6034	.0619	.3858
.40	-.0174	.4086	-.1850	.1331	-.2292	.0348	-.2195	.0161	-.2059	-.0044	.0244	.4575	.0599	.3014
.50			-.1521	.2830	-.2314	.1049	-.2317	.0623			-.2100	-.0308	.0481	.1700
.60					-.2187	.2611	-.2251	.1246			-.2385	-.0499	-.3367	-.3341
.70	-.0703	.2120	-.0796	.2407	-.2043	.2768	-.2560	.1301	-.3821	-.1969	-.3627	-.2615	-.3124	-.3107
.80	-.2462	-.0381	-.2893	-.1138			-.3527	-.0976	-.3476	-.1566	-.3415	-.2649	-.3660	-.2969
.90	-.2110	-.1142	-.3042	-.1566	-.3217	-.1254	-.3259	-.1211	-.3301	-.1312	-.3344	-.2626	-.3793	-.2759
.95	-.1795	-.1277	-.2299	-.1619			-.2879	-.1297	-.3069	-.1363	-.3179	-.2637	-.3523	-.2826

TAIL 1

	Cp at y/b of													
	0.02		0.22		0.44		0.56		0.67		0.83		0.98	
x/c	U.S.	L.S.	U.S.	L.S.	U.S.	L.S.	U.S.	L.S.	U.S.	L.S.	U.S.	L.S.	U.S.	L.S.
.05	.2068	.3042	.3991	.5403			.4788	.5541			.4163	.5839	.4100	.5117
.10	.2354	.3224					.4600	.4977	.4385	.4925			.3863	.4476
.15					.3786	.4122	.4028	.4567	.4160	.4810	.4389	.5064	.3416	.3748
.20	.1797	.1991					.3686	.4138	.3599	.4457			.2925	.3073
.25	-.0923	-.0822	-.0031	.2096	.3047	.3471	.3394	.3836	.3597	.4062	.3847	.4370	.2625	.2566
.30			-.1403	-.1151			.3015	.3146	.3331	.3611	.3677	.4110	.2327	.2239
.40	-.0409	-.0441							-.1020	-.0746	.2883	.2868	.1888	.1611
.50					-.1044	-.0735	-.1046	-.0676	-.1170	-.0828	-.1163	-.0961	.0856	.0151
.60	.0001	.0053	-.0592	-.0315			-.1092	-.0756	-.1152	-.0795	-.1933	-.1847	-.3397	-.3295
.70					-.1365	-.1106	-.2409	-.2389	-.3147	-.2888	-.3474	-.3251	-.3571	-.3472
.80	-.2265	-.2342	-.2614	-.2406	-.3369	-.3105	-.3332	-.3087			-.3223	-.3247		
.90	-.2405	-.2310	-.2873	-.2849	-.3192	-.2934	-.3269	-.3023	-.2956	-.2976	-.3054	-.2928	-.2802	-.2515
.95			-.2953	-.2979	-.2968	-.2753	-.3024	-.2809	-.2970	-.2980	-.3039	-.2849	-.2720	-.2370

TAIL 2

TABLE V. - CONTINUED

(g) α = 8.70°

Cp at y/b of

	0.02		0.22		0.44		0.56		0.67		0.83		0.98	
x/c	U.S.	L.S.	U.S.	L.S.	U.S.	L.S.	U.S.	L.S.	U.S.	L.S.	U.S.	L.S.	U.S.	L.S.
.05	-.1130	.5464	-.1648	.8701	-.2525	.9103	-.2350	.9621	-.2948	1.0090				.9441
.10	-.0668	.5230	-.1261	.7762	-.1551	.8321			-.1379	.8799	-.1894	.8897	-.2477	.7687
.15	-.0460	.5485	-.1045	.7066	-.0906	.7588			-.1175	.8007			-.1729	.6413
.20	-.0013	.5451	-.0962	.6379	-.0843	.6846	-.0595	.7184	-.0964	.7361	-.0791	.7677	-.0797	.5635
.25					-.0767	.5933	-.0617	.6464	-.0638	.6703	-.0705	.7215	-.0136	.4842
.30	-.1154	.2217							-.0595	.6014	-.0770	.6411	-.0125	.4200
.40	-.0471	.4748	-.2343	.2588	-.2798	.0951	-.2693	.0519	-.2600	.0194	-.0617	.4825	-.0043	.3279
.50			-.1830	.3405	-.2841	.2534	-.2833	.1428			-.2584	-.0061	-.0071	.1965
.60					-.2740	.3578	-.2688	.3355			-.2857	-.0031	-.3638	-.3393
.70	-.0813	.2520	-.1121	.3006	-.2609	.3313	-.3042	.2079	-.3591	-.0649	-.3487	-.2216	-.3511	-.3178
.80	-.2528	-.0072	-.3110	-.0860			-.3524	-.0768	-.3415	-.0808	-.3560	-.2051	-.4213	-.3080
.90	-.2218	-.0845	-.3051	-.1294	-.3241	-.0968	-.3271	-.0953	-.3247	-.0960	-.3462	-.1802	-.3961	-.2926
.95	-.1898	-.0984	-.2274	-.1355			-.3087	-.1034	-.3149	-.1092	-.3282	-.1623	-.3922	-.2984

TAIL 1

Cp at y/b of

	0.02		0.22		0.44		0.56		0.67		0.83		0.98	
x/c	U.S.	L.S.	U.S.	L.S.	U.S.	L.S.	U.S.	L.S.	U.S.	L.S.	U.S.	L.S.	U.S.	L.S.
.05	.1821	.2958	.4141	.5442			.4791	.5731			.4102	.5753	.3952	.5011
.10	.1990	.2721					.4629	.5135	.4366	.4938			.3746	.4431
.15					.3897	.4411	.4080	.4658	.4136	.4767	.4297	.4992	.3308	.3683
.20	.1782	.2388					.3731	.4255	.3644	.4417			.2873	.3017
.25	-.0676	-.0256	-.0046	.2160	.3158	.3654	.3438	.3855	.3588	.4021	.3735	.4263	.2534	.2464
.30			-.1515	-.1187			.3046	.3134	.3313	.3546	.3561	.3972	.2235	.2089
.40	-.0570	-.0496							-.1051	-.0774	.2725	.2764	.1779	.1408
.50					-.0950	-.0672	-.0952	-.0598	-.1165	-.0804	-.1198	-.0977	.0727	-.0031
.60	-.0367	-.0456	-.1321	-.1185			-.0993	-.0685	-.1115	-.0725	-.1949	-.1824	-.3477	-.3343
.70					-.1378	-.1148	-.2365	-.2285	-.3103	-.2817	-.3419	-.3184	-.3498	-.3475
.80	-.2290	-.2410	-.2640	-.2442	-.3404	-.3204	-.3331	-.3100			-.3216	-.3261		
.90	-.2484	-.2405	-.2958	-.2813	-.3347	-.3123	-.3342	-.3111	-.2995	-.2980	-.3018	-.2962	-.2929	-.2551
.95			-.3057	-.2984	-.3091	-.2894	-.3069	-.2863	-.2944	-.3043	-.2977	-.2847	-.2737	-.2335

TAIL 2

TABLE V.- CONTINUED

(h) α = 10.[illegible]°

	Cp at y/b of													
	0.02		0.22		0.44		0.56		0.67		0.83		0.98	
x/c	U.S.	L.S.	U.S.	L.S.	U.S.	L.S.	U.S.	L.S.	U.S.	L.S.	U.S.	L.S.	U.S.	L.S.
.05	[illegible]	[illegible]	-.251[illegible]	.3368	-.3262	.3821	-.3035	[illegible]	-.3582	[illegible]				.3555
.10	[illegible]	.3307	-.2084	.4423	-.3241	.3424			[illegible]	[illegible]	-.2743	[illegible]	[illegible]	[illegible]
.15	-.1855	.3438	[illegible]	.7662	-.1862	.3165			[illegible]	.3445			.2509	[illegible]
.20	-.3266	.3397	-.1872	.3333	[illegible]	[illegible]	-.1278	.3621	[illegible]	[illegible]	[illegible]	.2033	[illegible]	[illegible]
.25					-.1352	[illegible]	-.1491	.3815	[illegible]	[illegible]	-.1502	[illegible]	[illegible]	[illegible]
.30	-.1351	.3263							[illegible]	.3024	[illegible]	[illegible]	[illegible]	[illegible]
.40	-.3751	.3303	-.2803	.4627	-.3275	.3282	-.3214	[illegible]	-.3065	.2988	[illegible]	.3753	[illegible]	[illegible]
.50			-.1991	.4534	-.3079	[illegible]	-.3316	.3333			[illegible]	[illegible]	-.1335	[illegible]
.60					-.3152	[illegible]	-.3023	[illegible]			-.4251	.1515	-.3401	-.3335
.70	-.2357	.2032	-.1357	.3615	-.2999	.3767	-.3525	[illegible]	-.3313	-.3426	-.3543	-.0993	[illegible]	[illegible]
.80	-.2555	.0245	-.3239	-.0542			-.3537	-.0815	-.3233	-.0686	-.3547	-.0945	-.4213	-.2937
.90	-.2354	-.0553	-.3134	-.0954	-.3306	-.1553	-.3305	-.0725	-.3197	-.081[illegible]	-.3515	-.1136	-.4122	-.2552
.95	-.2003	-.0540	-.2203	-.1053			-.3131	-.0941	-.3145	-.0925	-.3355	-.1243	-.4205	-.227[illegible]

TAIL 1

	Cp at y/b of													
	0.02		0.22		0.44		0.56		0.67		0.83		0.98	
x/c	U.S.	L.S.	U.S.	L.S.	U.S.	L.S.	U.S.	L.S.	U.S.	L.S.	U.S.	L.S.	U.S.	L.S.
.05	.1739	.2751	.3743	.5321			.5006	.5944			.3939	.6662	.3735	.4997
.10	.1311	.2651					.4815	.5333	.4447	.4999			.3659	.4397
.15					.4157	.4681	.4274	.4847	.4180	.4841	.4157	.4912	.3233	.3571
.20	.1343	.2266					.3886	.4415	.3833	.4495			.2835	.2949
.25	-.0751	-.0253	-.2550	.1723	.3305	.3903	.3559	.4013	.3807	.4115	.3577	.4173	.2477	.2355
.30			-.1354	-.1519			.3164	.3298	.3332	.3546	.3521	.3862	.2146	.2034
.40	-.0551	-.0297							-.1027	-.0702	.2687	.2534	.1658	.1221
.50					-.3367	-.0731	-.0825	-.0432	-.1056	-.0666	-.1239	-.1015	.0557	-.0217
.60	-.1510	-.1115	-.1771	-.1540			-.0937	-.0625	-.0955	-.0575	-.1922	-.1771	-.3505	-.3411
.70					-.1448	-.1135	-.2384	-.2335	-.3018	-.2775	-.3330	-.3117	-.3431	-.3425
.80	-.2433	-.2553	-.2702	-.2511	-.3442	-.3252	-.3352	-.3125			-.3267	-.3131		
.90	-.2473	-.2481	-.2995	-.2830	-.3445	-.3307	-.3361	-.3215	-.3062	-.3016	-.2992	-.2978	-.3013	-.2827
.95			-.3114	-.2966	-.3182	-.3061	-.3095	-.3043	-.2985	-.3096	-.2931	-.2809	-.2747	-.2313

TAIL 2

TABLE V. - CONTINUED

(i) α = 12.70°

	Cp at y/b of													
	0.02		0.22		0.44		0.56		0.67		0.83		0.98	
x/c	U.S.	L.S.	U.S.	L.S.	U.S.	L.S.	U.S.	L.S.	U.S.	L.S.	U.S.	L.S.	U.S.	L.S.
.05	-.2713	.6522	-.3195	.9977	-.3725	.9983	-.3704	1.0373	-.3998	1.0779				.9743
.10	-.1266	.6644	-.2797	.9975	-.3213	.9232			-.3036	.9702	-.3410	[illegible]	-.3602	[illegible]
.15	-.1026	.7171	-.2540	.9178	-.2664	.8494			-.2701	.8931			-.3205	[illegible]
.20	-.0571	.7129	-.2354	.7281	-.2494	.7659	-.2140	.8006	-.2506	.8246	-.2507	.8440	-.2662	.6339
.25					-.2296	.6660	-.2213	.7171	-.2247	.7542	-.2301	.7931	-.2004	.5538
.30	-.1532	.4575							-.2139	.6761	-.2133	.7072	-.1386	.4857
.40	-.1113	.5799	-.3129	.5180	-.3701	.4364	-.3535	.2786	-.3516	.2203	-.2113	.5341	-.1424	.3894
.50			-.2220	.4766	-.3630	.4951	-.3699	.5026			-.3469	.1913	-.1351	.2355
.60					-.3424	.4745	-.3453	.4781			-.3554	.3268	-.4162	-.2907
.70	-.1163	.3503	-.1767	.4253	-.3166	.4229	-.3748	.2720	-.3508	-.0248	-.3417	-.0539	-.3633	-.2260
.80	-.2819	.0590	-.3489	-.0281			-.3660	-.0300	-.3436	-.0472	-.3426	-.0792	-.4004	-.1867
.90	-.2523	-.0137	-.3060	-.0667	-.3395	-.0397	-.3506	-.0485	-.3356	-.0597	-.3377	-.0929	-.4037	-.1936
.95	-.2122	-.0247	-.2059	-.0813			-.3343	-.0578	-.3272	-.0702	-.3365	-.1009	-.4101	-.2153

TAIL 1

	Cp at y/b of													
	0.02		0.22		0.44		0.56		0.67		0.83		0.98	
x/c	U.S.	L.S.	U.S.	L.S.	U.S.	L.S.	U.S.	L.S.	U.S.	L.S.	U.S.	L.S.	U.S.	L.S.
.05	.1511	.2836	.3008	.5014			.5532	.6483			.4159	.5722	.3864	.4947
.10	.1643	.2739					.5341	.5907	.4858	.5360			.3782	.4471
.15					.4649	.5005	.4807	.5308	.4568	.5165	.4237	.4947	.3376	.3660
.20	.1262	.2011					.4285	.4790	.4020	.4766			.2978	.3031
.25	-.0904	-.0341	-.0904	.1240	.3353	.3845	.3888	.4318	.3918	.4366	.3894	.4347	.2612	.2474
.30			-.2212	-.1900			.3493	.3592	.3617	.3890	.3736	.4033	.2252	.2111
.40	-.0591	-.0218							-.0820	-.0525	.2828	.2764	.1731	.1393
.50					-.1140	-.0939	-.0718	-.0443	-.0789	-.0452	-.1117	-.0830	.0561	-.0137
.60	-.0826	-.1059	-.2129	-.1914			-.0913	-.0680	-.0748	-.0421	-.1740	-.1554	-.3505	-.3321
.70					-.1606	-.1469	-.2383	-.2362	-.2961	-.2727	-.3222	-.2964	-.3357	-.3363
.80	-.2674	-.2793	-.3063	-.3065	-.3559	-.3419	-.3368	-.3156			-.3261	-.3083		
.90	-.2586	-.2622	-.3109	-.3074	-.3587	-.3495	-.3462	-.3292	-.3071	-.3027	-.2918	-.2918	-.2991	-.2644
.95			-.3131	-.3079	-.3337	-.3250	-.3195	-.3208	-.2960	-.3065	-.2823	-.2729	-.2713	-.2275

TAIL 2

TABLE V - CONTINUED
(l) α = 16.70°

	Cp at y/b of													
	0.02		0.22		0.44		0.56		0.67		0.83		0.98	
x/c	U.S.	L.S.	U.S.	L.S.	U.S.	L.S.	U.S.	L.S.	U.S.	L.S.	U.S.	L.S.	U.S.	L.S.
.05	-.3373	.6754	-.4191	1.0613	-.4342	1.0700	-.4427	1.1031	-.4434	1.1249				.9964
.10	-.1705	.7357	-.3928	.9889	-.4246	.9179			-.4287	1.0526	-.4347	1.0407	-.4375	.8876
.15	-.1580	.8245	-.3571	.9094	-.3866	.9453			-.3974	.3846			-.4284	.7825
.20	-.1292	.8149	-.3425	.8108	-.3693	.8693	-.3305	.9027	-.3716	.9253	-.3850	.9316	-.4076	.7110
.25					-.3537	.7805	-.3561	.8255	-.3528	.8619	-.3658	.8830	-.3644	.6337
.30	-.2250	.7350							-.3384	.7893	-.3466	.8038	-.3090	.5631
.40	-.1885	.6887	-.3182	.6139	-.4324	.6303	-.4268	.5786	-.4304	.4965	-.3362	.6366	-.3031	.4700
.50			-.2507	.5815	-.4046	.6036	-.4329	.6086			-.3962	.4518	-.3157	.3080
.60					-.3678	.5796	-.3934	.5866			-.3846	.4109	-.4427	-.1533
.70	-.1374	.4307	-.2478	.5359	-.3443	.5163	-.4164	.3382	-.4123	.0126	-.3626	-.0119	-.4389	-.1517
.80	-.3083	.1263	-.3698	.0111			-.3902	.0173	-.3984	.0004	-.3601	-.0013	-.4410	-.1523
.90	-.2847	.0552	-.3386	-.0145	-.3472	.0083	-.3499	.0005	-.3802	-.0085	-.3627	-.0409	-.4277	-.1570
.95	-.2528	.0461	-.2983	-.0236			-.3141	-.0079	-.3631	-.0172	-.3628	-.0488	-.4299	-.1855

TAIL 1

	Cp at y/b of													
	0.02		0.22		0.44		0.56		0.67		0.83		0.98	
x/c	U.S.	L.S.	U.S.	L.S.	U.S.	L.S.	U.S.	L.S.	U.S.	L.S.	U.S.	L.S.	U.S.	L.S.
.05	.1236	.2329	.2452	.4123			.3629	.6305			.5218	.6997	.4503	.5533
.10	.1352	.2228					.5626	.6517	.6105	.6654			.4289	.4984
.15					.4140	.4376	.5410	.5620	.5866	.6209	.5073	.5738	.3911	.4179
.20	.1079	.1710					.4561	.4562	.4961	.5502			.3419	.3519
.25	-.1061	-.0640	-.0370	.2090	.1930	.2186	.3760	.3656	.4528	.4831	.4752	.5241	.3062	.2976
.30			-.1669	-.1371			.3066	.2751	.4131	.4248	.4473	.4877	.2713	.2638
.40	-.0647	-.0091							-.0603	-.0452	.3522	.3470	.2255	.1967
.50					-.2659	-.2530	-.1656	-.1608	-.0952	-.0778	-.0774	-.0546	.1097	.0389
.60	-.0737	-.0877	-.1785	-.1722			-.2013	-.1958	-.1140	-.0958	-.1552	-.1488	-.3315	-.3137
.70					-.3212	-.3095	-.3227	-.3256	-.3252	-.3088	-.3208	-.3013	-.3311	-.3165
.80	-.3283	-.3420	-.3419	-.3281	-.4217	-.4190	-.3973	-.3866			-.3283	-.3138		
.90	-.3343	-.3512	-.3531	-.3437	-.4078	-.4034	-.4035	-.3945	-.3485	-.3409	-.2932	-.3071	-.2457	-.2170
.95			-.3448	-.3410	-.4012	-.3953	-.3888	-.3892	-.3386	-.3436	-.2916	-.2925	-.2294	-.1998

TAIL 2

TABLE V. - CONCLUDED
(k) α = 18.00°

	Cp at y/b of													
	0.02		0.22		0.44		0.56		0.67		0.83		0.98	
x/c	U.S.	L.S.	U.S.	L.S.	U.S.	L.S.	U.S.	L.S.	U.S.	L.S.	U.S.	L.S.	U.S.	L.S.
.05	-.3410	.5913	-.4326	1.0968	-.4515	1.0955	-.4641	1.1281	-.4677	1.1416				.9955
.10	-.2352	.7117	-.4179	1.0368	-.4530	1.0546			-.4706	1.0962	-.4513	1.0830	-.4472	.9077
.15	-.1971	.8312	-.3829	.9633	-.4350	.9894			-.4625	1.0250			-.4470	[illegible]
.20	-.1394	.8255	-.3587	.8715	-.4155	.9179	-.4041	.9504	-.4367	.9701	-.4417	.9555	-.4384	.7436
.25					-.4046	.8359	-.4099	.8812	-.4037	.9077	-.4300	.9131	-.4244	.6700
.30	-.2436	.7667							-.3951	.8401	-.4051	.8441	-.3905	.6073
.40	-.2091	.7464	-.3101	.6808	-.4488	.6796	-.4549	.6497	-.4477	.5849	-.3873	.6394	-.3719	.5107
.50			-.2946	.6440	-.4161	.6631	-.4391	.6650			-.3936	.5055	-.3881	.3533
.60					-.3838	.6313	-.4125	.6321			-.3749	.4343	-.4429	-.1305
.70	-.1551	.4684	-.3105	.5822	-.3798	.5440	-.4133	.3597	-.4101	.0230	-.3578	.0089	-.4484	-.1264
.80	-.3192	.1431	-.3943	.0385			-.3816	.0315	-.4085	.0174	-.3620	-.0050	-.4535	-.1230
.90	-.2904	.0786	-.3670	-.0064	-.3737	.0352	-.3501	.0208	-.3846	.0135	-.3630	-.0119	-.4377	-.1291
.95	-.2592	.0766	-.3363	-.0148			-.3502	.0151	-.3647	.0063	-.3609	-.0187	-.4328	-.1557

TAIL 1

	Cp at y/b of													
	0.02		0.22		0.44		0.56		0.67		0.83		0.98	
x/c	U.S.	L.S.	U.S.	L.S.	U.S.	L.S.	U.S.	L.S.	U.S.	L.S.	U.S.	L.S.	U.S.	L.S.
.05	.1121	.2291	.2201	.3935			.2830	.4746			.5534	.7512	.5005	.5852
.10	.1268	.2270					.4104	.5506	.5677	.6427			.4939	.5438
.15					.3099	.3588	.4255	.4817	.5556	.5978	.5584	.6298	.4437	.4621
.20	.1042	.1700					.3705	.3834	.4669	.5149			.3956	.3959
.25	-.1068	-.0618	-.0598	.1852	.1335	.1667	.2889	.2906	.4253	.4359	.5045	.5351	.3622	.3404
.30			-.1816	-.1455			.2259	.1835	.3759	.3675	.4695	.4387	.3280	.3032
.40	-.0718	-.0138							-.0887	-.0883	.3615	.3416	.2825	.2486
.50					-.2947	-.2884	-.2197	-.2248	-.1354	-.1366	-.0775	-.0683	.1710	.0939
.60	-.0908	-.1050	-.1809	-.1613			-.2553	-.2613	-.1636	-.1661	-.1621	-.1710	-.3053	-.2953
.70					-.3499	-.3432	-.3536	-.3691	-.3536	-.3517	-.3245	-.3175	-.3205	-.2713
.80	-.3223	-.3350	-.3462	-.3328	-.4425	-.4364	-.4222	-.4204			-.3419	-.3348		
.90	-.3300	-.3413	-.3628	-.3567	-.4261	-.4269	-.4283	-.4250	-.3784	-.3744	-.3103	-.3254	-.2583	-.2455
.95			-.3605	-.3583	-.4212	-.4194	-.4207	-.4187	-.3774	-.3798	-.3104	-.3119	-.2547	-.2383

TAIL 2

ORIGINAL PAGE IS
OF POOR QUALITY

TABLE VI. - PRESSURE COEFFICIENTS, $\phi = 0^\circ$ $\delta = 0^\circ$, $M = 2.36$

(a) $\alpha = -4.08^\circ$

	Cp at y/b of													
	0.02		0.22		0.44		0.56		0.67		0.83		0.98	
x/c	U.S.	L.S.	U.S.	L.S.	U.S.	L.S.	U.S.	L.S.	U.S.	L.S.	U.S.	L.S.	U.S.	L.S.
.05	.0743	.1255	.2157		.1769	.2758	.1875	.3476		.2076			.2430	.2299
.10	.1069	.1131	.2301	.2977	.2042	.3072		.3130	.2121	.3064	.2046	.2902	.2261	.3159
.15	.0945	.1085	.1291	.2715	.2063	.3021			.2033	.3095			.1870	.2760
.20	.0777	.0953	.1800	.2547	.2030	.2885	.1988	.2934	.2046	.3036	.2093	.2963	.1782	.2610
.25	-.0255	-.0375			.1996	.2836	.2015	.2914	.2071	.2965	.2097	.3018	.1609	.2330
.30	-.0166	-.0225							.2046	.2911	.2090	.3009	.1398	.2153
.40	.0007	.0097	-.0329	-.0217	-.0032	.0275	.0043	.0371	.0114	.0534	.2007	.2333	.1243	.1962
.50			-.0411	-.0356	-.0131	.0163	-.0074	.0231			.0109	.0339	.1098	.1579
.60					-.0173	.0077	.0011	.0257	-.0087	.0251	-.0164	.0151	-.1395	-.1387
.70	-.0209	.0200	-.0200	-.0093	-.0257	-.0015	-.0365	-.0283	-.1245	-.1131	-.1353	-.1230	-.1417	-.1354
.80	-.1077	-.0985	-.1212	-.1063			-.1443	-.1381	-.1419	-.1360	-.1347	-.1351	-.1322	-.1376
.90	-.0962	-.0900	-.1423	-.1272	-.1285	-.1501	-.1302	-.1470	-.1186	-.1357	-.1172	-.1272		
.95	-.0994	-.0920	-.1352	-.1279			-.1223	-.1349	-.1157	-.1240	-.1139	-.1162		-.1153

TAIL 1

	Cp at y/b of													
	0.02		0.22		0.44		0.56		0.67		0.83		0.98	
x/c	U.S.	L.S.	U.S.	L.S.	U.S.	L.S.	U.S.	L.S.	U.S.	L.S.	U.S.	L.S.	U.S.	L.S.
.05	.2152	.0490	.4544	.1267			.4141	.1059			.4455	.1200	.3298	.1201
.10	.2158	.0331					.4384	.1574	.4442	.1584			.3848	.1396
.15					.4537	.1427	.4441	.1461	.4456	.1442			.3580	.1239
.20	.2050	.0378					.4533	.1385	.4341	.1428			.3465	.1058
.25	.0536	-.0541	.1424	.0632	.4341	.1289	.4516	.1362	.4436	.1425	.4320	.1456	.3393	.0949
.30			.0539	-.0787			.4360	.1230	.4433	.1378	.4404	.1442	.3275	.0920
.40	.0855	-.0384							.1245	-.0389	.4248	.1208	.3118	.0862
.50					.0773	-.0682	.0910	-.0597	.1004	-.0604	.1166	-.0484	.2635	.0465
.60	.1523	.0085	.0438	-.0782			.0825	-.0706	.0905	-.0658	.0562	-.0915	-.1097	-.1275
.70					.0601	-.0831	-.0217	-.1311	-.0840	-.1427	-.0838	-.1206	-.1125	-.1206
.80	-.0647	-.0921	-.0757	-.1410	-.1004	-.1177	-.1017	-.1191			-.1018	-.1180		
.90	-.0410	-.1208	-.0850	-.1312	-.1193	-.1186	-.1138	-.1182	-.1079	-.1189	-.1137	-.1179	-.1077	-.1419
.95			-.0926	-.1264	-.1242	-.1187	-.1183	-.1185	-.1150	-.1156	-.1193	-.1184	-.1181	-.1508

TAIL 2

TABLE VI. - CONTINUED
(b) α = -2.07°

	Cp at y/b of													
	0.02		0.22		0.44		0.56		0.67		0.83		0.98	
x/c	U.S.	L.S.	U.S.	L.S.	U.S.	L.S.	U.S.	L.S.	U.S.	L.S.	U.S.	L.S.	U.S.	L.S.
.05	.0693	.1160	.2219		.1833	.2793	.1942	.3546		.2141			.2470	.2254
.10	.0876	.1110	.2014	.3005	.2090	.3103		.3193	.2181	.3027	.2105	.2985	.2274	.3063
.15	.0638	.1100	.1863	.2759	.2117	.3062			.2071	.3103			.1832	.2751
.20	.0732	.1021	.1759	.2520	.2080	.2923	.2001	.2954	.2078	.3041	.2114	.2982	.1732	.2515
.25	-.0141	-.0226			.2031	.2979	.2057	.2948	.2103	.2962	.2107	.3037	.1553	.2298
.30	-.0023	-.0072							.2072	.2998	.2116	.3006	.1368	.2074
.40	.0240	.0358	-.0382	-.0217	-.0038	.0243	.0064	.0319	.0129	.0582	.2032	.2914	.1279	.1923
.50			-.0452	-.0353	-.0154	.0081	-.0050	.0182			.0112	.0424	.1134	.1693
.60					-.0198	-.0006	-.0033	.0181	-.0078	.0224	-.0201	.0157	-.1369	-.1353
.70	-.0143	.0168	-.0100	.0023	-.0288	-.0077	-.0331	-.0323	-.1255	-.1094	-.1357	-.1229	-.1411	-.1363
.80	-.0861	-.0713	-.1198	-.1029			-.1450	-.1354	-.1422	-.1354	-.1300	-.1353	-.1306	-.1386
.90	-.0836	-.0760	-.1407	-.1272	-.1266	-.1443	-.1293	-.1424	-.1193	-.1355	-.1164	-.1259		
.95	-.0863	-.0816	-.1299	-.1275			-.1222	-.1294	-.1155	-.1236	-.1137	-.1154		-.1123

TAIL 1

	Cp at y/b of													
	0.02		0.22		0.44		0.56		0.67		0.83		0.98	
x/c	U.S.	L.S.	U.S.	L.S.	U.S.	L.S.	U.S.	L.S.	U.S.	L.S.	U.S.	L.S.	U.S.	L.S.
.05	.1600	.0943	.3626	.1983			.3263	.1609			.3574	.1710	.2524	.1669
.10	.1637	.0721					.3479	.2188	.3548	.2166			.3125	.1874
.15					.3581	.2077	.3532	.2066	.3591	.2040			.2883	.1649
.20	.1545	.0733					.3535	.1994	.3470	.2039			.2724	.1459
.25	.0245	-.0269	.1033	.1177	.3548	.1932	.3591	.1970	.3510	.2034	.3449	.2020	.2633	.1312
.30			.0325	-.0402			.3562	.1815	.3482	.1978	.3527	.2001	.2563	.1235
.40	.0520	-.0156							.0859	-.0061	.3396	.1729	.2442	.1215
.50					.0421	-.0367	.0536	-.0257	.0595	-.0270	.0683	-.0190	.1997	.0712
.60	.1118	.0212	.0028	-.0598			.0462	-.0364	.0508	-.0328	.0140	-.0687	-.1202	-.1275
.70					.0235	-.0543	-.0472	-.1124	-.1064	-.1463	-.1079	-.1335	-.1219	-.1342
.80	-.0725	-.0852	-.0989	-.1361	-.1199	-.1283	-.1214	-.1348			-.1231	-.1162		
.90	-.0616	-.1152	-.1086	-.1269	-.1370	-.1232	-.1330	-.1235	-.1254	-.1178	-.1308	-.1135	-.1239	-.1106
.95			-.1138	-.1257	-.1336	-.1218	-.1322	-.1233	-.1278	-.1189	-.1258	-.1132	-.1195	-.1236

TAIL 2

TABLE VI. - CONTINUED

(c) α = -0.08°

	Cp at y/b of													
	0.02		0.22		0.44		0.56		0.67		0.83		0.98	
x/c	U.S.	L.S.	U.S.	L.S.	U.S.	L.S.	U.S.	L.S.	U.S.	L.S.	U.S.	L.S.	U.S.	L.S.
.05	.0678	.1284	.2232		.1871	.2815	.1960	.3534		.2200			.2488	.2231
.10	.0992	.1334	.2071	.3031	.2116	.3126		.3231	.2241	.3038	.2150	.3057	.2361	.2983
.15	.0942	.1319	.1906	.2829	.2139	.3093			.2112	.3114			.1771	.2732
.20	.0814	.1204	.1817	.2613	.2112	.2959	.2047	.2945	.2113	.3105	.2152	.3025	.1702	.2453
.25	-.0211	-.0251			.2068	.2924	.2112	.2944	.2135	.3016	.2122	.3057	.1529	.2231
.30	-.0087	-.0093							.2107	.2959	.2124	.2985	.1388	.2075
.40	.0122	.0253	-.0328	-.0136	-.0030	.0255	.0060	.0333	.0141	.0534	.2043	.2914	.1317	.1907
.50			-.0414	-.0281	-.0149	.0105	-.0052	.0191			.0135	.0418	.1163	.1609
.60					-.0190	.0029	-.0047	.0185	-.0073	.0228	-.0185	.0137	-.1342	-.1300
.70	-.0076	.0303	-.0184	-.0063	-.0281	-.0035	-.0333	-.0303	-.1250	-.1063	-.1368	-.1228	-.1490	-.1367
.80	-.0862	-.0656	-.1193	-.1065			-.1438	-.1325	-.1413	-.1330	-.1290	-.1361	-.1310	-.1427
.90	-.0817	-.0750	-.1358	-.1244	-.1244	-.1413	-.1254	-.1387	-.1183	-.1314	-.1152	-.1227		
.95	-.0846	-.0797	-.1270	-.1225			-.1198	-.1251	-.1142	-.1195	-.1129	-.1137		-.1060

TAIL 1

	Cp at y/b of													
	0.02		0.22		0.44		0.56		0.67		0.83		0.98	
x/c	U.S.	L.S.	U.S.	L.S.	U.S.	L.S.	U.S.	L.S.	U.S.	L.S.	U.S.	L.S.	U.S.	L.S.
.05	.1237	.1317	.2754	.2785			.2533	.2199			.2843	.2379	.1903	.2261
.10	.1185	.1097					.2758	.2844	.2790	.2802			.2486	.2465
.15					.2788	.2769	.2757	.2715	.2829	.2676			.2242	.2182
.20	.1075	.1114					.2785	.2660	.2726	.2686			.2135	.1973
.25	-.0039	.0008	.0644	.1825	.2728	.2616	.2773	.2632	.2769	.2679	.2712	.2577	.2022	.1773
.30			-.0042	-.0036			.2742	.2472	.2736	.2621	.2774	.2674	.1960	.1719
.40	.0213	.0129							.0395	.0332	.2649	.2389	.1890	.1597
.50					.0062	-.0024	.0155	.0113	.0170	.0102	.0294	.0192	.1505	.1024
.60	.0730	.0450	-.0305	-.0398			.0086	-.0003	.0095	.0038	-.0224	-.0381	-.1269	-.1283
.70					-.0112	-.0195	-.0718	-.0869	-.1273	-.1287	-.1291	-.1332	-.1381	-.1426
.80	-.0778	-.0731	-.1161	-.1258	-.1373	-.1406	-.1387	-.1411			-.1375	-.1293		
.90	-.0791	-.1024	-.1269	-.1308	-.1366	-.1296	-.1312	-.1316	-.1183	-.1161	-.1166	-.1120	-.1094	-.0904
.95			-.1296	-.1245	-.1241	-.1212	-.1203	-.1207	-.1145	-.1126	-.1118	-.1090	-.1018	-.1010

TAIL 2

TABLE VI. - CONTINUED

(d) α = 1.92°

	Cp at y/b of													
	0.02		0.22		0.44		0.56		0.67		0.83		0.98	
x/c	U.S.	L.S.	U.S.	L.S.	U.S.	L.S.	U.S.	L.S.	U.S.	L.S.	U.S.	L.S.	U.S.	L.S.
.05	.0751	.1503	.2258		.1915	.2845	.1978	.3539		.2240			.2492	.2274
.10	.1146	.1544	.2114	.3095	.2149	.3169		.3311	.2277	.3063	.2182	.3110	.2245	.2918
.15	.1072	.1535	.1966	.2932	.2155	.3154			.2142	.3104			.1749	.2687
.20	.0905	.1396	.1870	.2681	.2140	.3026	.2112	.2971	.2149	.3138	.2200	.3104	.1671	.2449
.25	-.0291	-.0275			.2099	.2981	.2151	.2999	.2173	.3052	.2154	.3114	.1539	.2186
.30	-.0123	-.0107							.2147	.3000	.2152	.3014	.1418	.2065
.40	-.0018	.0113	-.0298	-.0087	-.0001	.0285	.0068	.0354	.0147	.0517	.2077	.2941	.1368	.1914
.50			-.0401	-.0241	-.0116	.0127	-.0043	.0213			.0155	.0445	.1225	.1663
.60					-.0159	.0057	-.0038	.0194	-.0081	.0233	-.0165	.0154	-.1301	-.1266
.70	-.0076	.0348	-.0292	-.0136	-.0252	-.0009	-.0315	-.0283	-.1255	-.1074	-.1379	-.1243	-.1480	-.1395
.80	-.0923	-.0656	-.1290	-.1179			-.1426	-.1312	-.1408	-.1324	-.1316	-.1384	-.1150	-.1404
.90	-.0825	-.0769	-.1304	-.1290	-.1239	-.1402	-.1254	-.1366	-.1180	-.1293	-.1166	-.1225		
.95	-.0858	-.0800	-.1221	-.1227			-.1187	-.1234	-.1135	-.1177	-.1140	-.1138		-.1078

TAIL 1

	Cp at y/b of													
	0.02		0.22		0.44		0.56		0.67		0.83		0.98	
x/c	U.S.	L.S.	U.S.	L.S.	U.S.	L.S.	U.S.	L.S.	U.S.	L.S.	U.S.	L.S.	U.S.	L.S.
.05	.0886	.1687	.1973	.3678			.1864	.2843			.2193	.3065	.1378	.2825
.10	.0839	.1495					.2124	.3586	.2124	.3516			.1911	.3056
.15					.2073	.3571	.2030	.3442	.2148	.3401			.1697	.2810
.20	.0628	.1549					.2054	.3403	.2073	.3405			.1619	.2555
.25	-.0320	.0304	.0215	.2422	.2014	.3368	.2065	.3406	.2100	.3408	.2068	.3359	.1525	.2332
.30			-.0404	.0330			.2045	.3179	.2067	.3360	.2111	.3366	.1470	.2291
.40	-.0008	.0458							-.0022	.0719	.1998	.3052	.1432	.2099
.50					-.0297	.0334	-.0232	.0487	-.0213	.0513	-.0075	.0596	.1099	.1408
.60	.0393	.0738	-.0517	-.0088			-.0304	.0359	-.0274	.0447	-.0543	-.0069	-.1339	-.1203
.70					-.0469	.0154	-.1006	-.0645	-.1467	-.1088	-.1480	-.1106	-.1464	-.1255
.80	-.0823	-.0596	-.1330	-.1062	-.1494	-.1240	-.1447	-.1231			-.1299	-.1220		
.90	-.0906	-.0869	-.1411	-.1183	-.1306	-.1358	-.1281	-.1305	-.1206	-.1220	-.1227	-.1265	-.1171	-.1113
.95			-.1341	-.1199	-.1278	-.1306	-.1261	-.1286	-.1228	-.1250	-.1218	-.1238	-.1243	-.1026

TAIL 2

TABLE VI. - CONTINUED
(a) α = 3.02°

	Cp at y/b of													
	0.02		0.22		0.44		0.56		0.67		0.83		0.98	
x/c	U.S.	L.S.	U.S.	L.S.	U.S.	L.S.	U.S.	L.S.	U.S.	L.S.	U.S.	L.S.	U.S.	L.S.
.05	.0817	.1593	.2334		.1969	.2992	.1351	.3559		.2263			.2475	.2270
.10	.1265	.1724	-.3023	.3207	.2197	[illegible]		[illegible]	.2303	.3129	.2215	.3142	.2057	.2925
.15	.1153	.1720	.2036	.3042	.2194	.3173			.2179	.3048			.1752	.2507
.20	.0992	.1561	.1345	.2756	.2179	.3035	.2154	.3027	.2173	.3140	.2038	.3176	.1561	.2438
.25	-.0305	-.0265			.2141	.3042	.2151	.3095	.2205	.3082	.2180	.3123	.1537	.2138
.30	-.0150	-.0098							.2170	.3027	.2160	.3047	.1453	.2070
.40	-.0075	.0053	-.0279	-.0050	.0020	.0060	-.2011	.0421	.0171	.0505	.2038	.2981	.1425	.1958
.50			-.0379	-.0214	-.0091	.0136	-.0035	.0244			.0155	.0475	.1238	.1702
.60					-.0136	.0121	-.0029	.0224	-.0071	.0240	-.0166	.0164	-.1272	-.1203
.70	-.0135	.0270	-.0306	-.0147	-.0224	.0035	-.0296	-.0242	-.1249	-.1077	-.1389	-.1231	-.1386	-.1449
.80	-.0353	-.0661	-.1348	-.1223			-.1405	-.1283	-.1409	-.1311	-.1303	-.1399	-.1085	-.1171
.90	-.0816	-.0756	-.1282	-.1341	-.1252	-.1375	-.1233	-.1341	-.1174	-.1274	-.3036	-.1217		
.95	-.0835	-.0763	-.1221	-.1235			-.1164	-.1212	-.1129	-.1156	-.1144	-.1142		-.1267

TAIL 1

	Cp at y/b of													
	0.02		0.22		0.44		0.56		0.67		0.83		0.98	
x/c	U.S.	L.S.	U.S.	L.S.	U.S.	L.S.	U.S.	L.S.	U.S.	L.S.	U.S.	L.S.	U.S.	L.S.
.05	.0477	.2192	.1294	.4595			.1260	.3665			.1687	.3954	.0943	.3469
.10	.0491	.1953					.1541	.4484	.1532	.4405			.1438	.3743
.15					.1437	.4423	.1457	.4313	.1543	.4223			.1279	.3513
.20	.0273	.2098					.1429	.4273	.1492	.4258			.1209	.3197
.25	-.0554	.0605	-.0155	.3003	.1387	.4110	.1431	.4235	.1507	.4283	.1549	.4154	.1156	.3021
.30			-.0746	.0715			.1337	.4012	.1479	.4207	.1560	.4204	.1121	.2986
.40	-.0225	.0778							-.0362	.1160	.1473	.3805	.1093	.2668
.50					-.0628	.0679	-.0761	.0853	-.0559	.0928	-.0393	.1065	.0789	.1945
.60	.0178	.1042	-.0663	.0312			-.0544	.0720	-.0617	.0834	-.0813	.0314	-.1403	-.1123
.70					-.0768	.0512	-.1242	-.0377	-.1560	-.0834	-.1437	-.0868	-.1435	-.1112
.80	-.0855	-.0443	-.1463	-.0862	-.1305	-.1032	-.1315	-.1036			-.1326	-.3826		
.90	-.0960	-.0711	-.1494	-.0978	-.1302	-.1179	-.1288	-.1122	-.1252	-.1036	-.1314	-.1095	-.1337	-.1052
.95			-.1380	-.1004	-.1298	-.1215	-.1292	-.1161	-.1287	-.1103	-.1308	-.1148	-.1482	-.1128

TAIL 2

TABLE VI - CONTINUED

(f) α = 5.92°

	Cp at y/b of													
	0.02		0.22		0.44		0.56		0.67		0.83		0.98	
x/c	U.S.	L.S.	U.S.	L.S.	U.S.	L.S.	U.S.	L.S.	U.S.	L.S.	U.S.	L.S.	U.S.	L.S.
.05	.0862	.1718	.2430		.2023	.2978	.1961	.3597		.2288			.2436	.2250
.10	.1393	.1898	.2303	.3351	.2255	.3211		.3465	.2355	.3174	.2245	.3109	.2212	.2771
.15	.1257	.1892	.2136	.3193	.2249	.3255			.2209	.3037			.1719	.2549
.20	.1042	.1701	.2030	.2886	.2226	.3180	.2194	.3105	.2203	.3189	.2274	.3200	.1653	.2393
.25	-.0264	-.0206			.2200	.3112	.2221	.3219	.2239	.3168	.2212	.3167	.1554	.2247
.30	-.0118	-.0049							.2210	.3109	.2189	.3076	.1515	.2116
.40	-.0066	.0095	-.0250	-.0000	.0043	.0411	.0109	.0462	.0156	.0560	.2142	.3012	.1498	.2048
.50			-.0358	-.0170	-.0054	.0231	-.0015	.0313			.0169	.0490	.1389	.1755
.60					-.0089	.0187	-.0021	.0270	-.0051	.0266	-.0151	.0152	-.1229	-.1161
.70	-.0195	.0190	-.0302	-.0124	-.0165	.0066	-.0277	-.0209	-.1244	-.1072	-.1397	-.1262	-.1157	-.1379
.80	-.0961	-.0673	-.1345	-.1233			-.1381	-.1273	-.1404	-.1304	-.1270	-.1411	-.1198	-.1005
.90	-.0791	-.0729	-.1217	-.1350	-.1210	-.1377	-.1208	-.1347	-.1159	-.1253	-.1162	-.1222		
.95	-.0786	-.0716	-.1204	-.1233			-.1136	-.1222	-.1116	-.1144	-.1146	-.1150		-.1463

TAIL 1

	Cp at y/b of													
	0.02		0.22		0.44		0.56		0.67		0.83		0.98	
x/c	U.S.	L.S.	U.S.	L.S.	U.S.	L.S.	U.S.	L.S.	U.S.	L.S.	U.S.	L.S.	U.S.	L.S.
.05	.0060	.2662	.0690	.5467			.0705	.4719			.1129	.4833	.0482	.4127
.10	.0118	.2349					.0985	.5540	.0990	.5495			.0933	.4673
.15					.0863	.5302	.0919	.5329	.0991	.5311			.0838	.4391
.20	-.0034	.2614					.0892	.5182	.0922	.5305			.0809	.4105
.25	-.0838	.0902	-.0522	.3533	.0807	.4772	.0877	.5009	.0950	.5200	.0990	.5279	.0774	.3860
.30			-.1061	.1056			.0927	.4603	.0935	.5021	.0987	.5291	.0770	.3737
.40	-.0460	.1171							-.0689	.1557	.0907	.4658	.0767	.3458
.50					-.0924	.1030	-.0855	.1213	-.0856	.1304	-.0686	.1478	.0509	.2440
.60	-.0026	.1423	-.0886	.0748			-.0956	.1093	-.0911	.1210	-.1081	.0680	-.1411	-.0997
.70					-.1026	.0593	-.1414	-.0120	-.1433	-.0603	-.1354	-.0652	-.1389	-.1063
.80	-.0911	-.0234	-.1574	-.0620	-.1356	-.0315	-.1313	-.0823			-.1342	-.0912		
.90	-.1039	-.0506	-.1606	-.0733	-.1374	-.0964	-.1316	-.0909	-.1282	-.0837	-.1340	-.0899	-.1481	-.0892
.95			-.1469	-.0761	-.1378	-.1005	-.1314	-.0953	-.1314	-.0898	-.1343	-.0962	-.1603	-.0964

TAIL 2

TABLE VI. - CONTINUED

(g) α = 7.93°

	Cp at y/b of													
	0.02		0.22		0.44		0.56		0.67		0.83		0.93	
x/c	U.S.	L.S.	U.S.	L.S.	U.S.	L.S.	U.S.	L.S.	U.S.	L.S.	U.S.	L.S.	U.S.	L.S.
.05	.0947	.1834	.2549		.2069	.3052	.1874	.3505		.2210			.2403	.2279
.10	.1495	.2089	.2422	.3531	.2295	.3240		.3475	.2347	.3195	.2201	.3117	.2117	.2784
.15	.1354	.2063	.2254	.3344	.2294	.3316			.2243	.3005			.1753	.2510
.20	.1142	.1845	.2153	.3044	.2280	.3253	.2273	.3133	.2244	.3151	.2233	.3240	.1662	.2383
.25	-.0188	-.0107			.2265	.3234	.2277	.3250	.2274	.3215	.2205	.3208	.1589	.2254
.30	-.0067	.0022							.2241	.3181	.2178	.3120	.1557	.2148
.40	-.0031	.0179	-.0204	.0053	.0081	.0455	.0124	.0472	.0199	.0602	.2110	.3050	.1564	.2078
.50			-.0315	-.0107	.0003	.0305	.0000	.0323			.0151	.0482	.1462	.1825
.60					-.0034	.0246	.0016	.0289	-.0043	.0279	-.0195	.0112	-.1181	-.1112
.70	-.0223	.0200	-.0282	-.0092	-.0113	.0147	-.0301	-.0181	-.1239	-.1040	-.1400	-.1288	-.1087	-.1295
.80	-.0964	-.0686	-.1323	-.1222			-.1341	-.1217	-.1353	-.1290	-.1231	-.1400	-.1165	-.1065
.90	-.0755	-.0631	-.1154	-.1334	-.1103	-.1326	-.1126	-.1289	-.1124	-.1259	-.1155	-.1212		
.95	-.0725	-.0659	-.1150	-.1221			-.1080	-.1175	-.1093	-.1146	-.1145	-.1158		-.1560

TAIL 1

	Cp at y/b of													
	0.02		0.22		0.44		0.56		0.57		0.83		0.98	
x/c	U.S.	L.S.	U.S.	L.S.	U.S.	L.S.	U.S.	L.S.	U.S.	L.S.	U.S.	L.S.	U.S.	L.S.
.05	-.0332	.3228	.0163	.6241			.0218	.5811			.0668	.6758	.0115	.5758
.10	-.0210	.2651					.0480	.6661	.0505	.6934			.0550	.6451
.15					.0341	.6032	.0425	.6208	.0497	.6420			.0530	.5852
.20	-.0289	.3088					.0368	.5937	.0424	.6224			.0557	.5367
.25	-.1008	.1199	-.0846	.4008	.0268	.5402	.0373	.5715	.0433	.6008	.0539	.6299	.0559	.4895
.30			-.1330	.1408			.0329	.5254	.0423	.5771	.0515	.6185	.0568	.4545
.40	-.0622	.1630							-.0959	.1825	.0432	.5272	.0568	.4036
.50					-.1187	.1409	-.1129	.1582	-.1124	.1654	-.0956	.1797	.0321	.2757
.60	-.0266	.1906	-.1151	.1242			-.1228	.1508	-.1179	.1606	-.1309	.0996	-.1403	-.0926
.70					-.1265	.1321	-.1501	.0164	-.1383	-.0363	-.1366	-.0458	-.1370	-.1123
.80	-.0964	.0017	-.1732	-.0300	-.1420	-.0576	-.1376	-.0579			-.1360	-.0603		
.90	-.1140	-.0266	-.1678	-.0428	-.1450	-.0712	-.1378	-.0654	-.1322	-.0589	-.1365	-.0686	-.1499	-.1060
.95			-.1553	-.0480	-.1452	-.0749	-.1379	-.0699	-.1348	-.0647	-.1365	-.0757	-.1569	-.1167

TAIL 2

TABLE VI. - CONTINUED

(h) α = 9.92°

	Cp at y/b of													
	0.02		0.22		0.44		0.56		0.67		0.83		0.98	
x/c	U.S.	L.S.	U.S.	L.S.	U.S.	L.S.	U.S.	L.S.	U.S.	L.S.	U.S.	L.S.	U.S.	L.S.
.05	.1030	.2068	.2568		.2090	.3148	.1870	.3541		.2337			.2602	.2408
.10	.1653	.2277	.2534	.3665	.2239	.3273		.3595	.2430	.3373	.3320	.3302	.2174	.2929
.15	.1482	.2247	.2378	.3529	.2318	.3380			.2329	.3148			.1896	.2632
.20	.1262	.2002	.2296	.3230	.2318	.3353	.2333	.3262	.2325	.3260	.2410	.3398	.1813	.2527
.25	-.0117	.0007			.2232	.3320	.2326	.3318	.2339	.3330	.2343	.3356	.1746	.2418
.30	.0007	.0110							.2292	.3272	.2304	.3244	.1721	.2327
.40	[illegible]	[illegible]	[illegible]	.0154	.0095	.0434	.0121	.0429	.0214	.0555	.0221	[illegible]	[illegible]	[illegible]
.50			-.0229	-.0015	.0023	.0403	-.0012	.0322			.0212	.0491	.1652	.2020
.60					-.0001	.0355	.0003	.0298	-.0039	.0264	-.0139	.0295	-.1143	-.1045
.70	-.0177	.0262	-.0224	-.0023	-.0062	.0249	-.0333	-.0186	-.1219	-.1044	-.1366	-.1301	-.1040	-.1142
.80	-.0953	-.0693	-.1279	-.1195			-.1273	-.1203	-.1291	-.1293	-.1214	-.1381	-.1186	-.0995
.90	-.0725	-.0665	-.1104	-.1302	-.1064	-.1288	-.1083	-.1256	-.1093	-.1224	-.1191	-.1201		
.95	-.0683	-.0614	-.1100	-.1131			-.1049	-.1144	-.1067	-.1114	-.1134	-.1155		-.1648

TAIL 1

	Cp at y/b of													
	0.02		0.22		0.44		0.56		0.67		0.83		0.98	
x/c	U.S.	L.S.	U.S.	L.S.	U.S.	L.S.	U.S.	L.S.	U.S.	L.S.	U.S.	L.S.	U.S.	L.S.
.05	-.0632	.3352	-.0302	.6898			-.0229	.7346			.0203	.8703	-.0225	.8026
.10	-.0447	.2784					.0005	.7476	.0061	.7745			.0245	.7518
.15					-.0118	.6615	-.0038	.6904	.0041	.7076			.0314	.6793
.20	-.0464	.3393					-.0078	.6536	-.0025	.6907			.0358	.6109
.25	-.1113	.1466	-.1114	.4455	-.0211	.5942	-.0098	.6295	-.0023	.6692	.0132	.7051	.0353	.5523
.30			-.1545	.1704			-.0138	.5674	-.0035	.6283	.0077	.6919	.0364	.5112
.40	-.0812	.2026							-.1216	.2066	-.0013	.5699	.0350	.4383
.50					-.1402	.1796	-.1353	.1954	-.1355	.2021	-.1227	.2008	.0147	.2888
.60	-.0482	.2392	-.1378	.1727			-.1463	.1935	-.1401	.2021	-.1497	.1252	-.1513	-.0857
.70					-.1437	.1762	-.1547	.0461	-.1441	-.0137	-.1453	-.0259	-.1452	-.1074
.80	-.1056	.0281	-.1866	.0012	-.1520	-.0318	-.1494	-.0317			-.1447	-.0396		
.90	-.1255	-.0031	-.1674	-.0117	-.1545	-.0429	-.1498	-.0383	-.1407	-.0366	-.1445	-.0474	-.1651	-.1048
.95			-.1457	-.0185	-.1540	-.0446	-.1493	-.0430	-.1436	-.0423	-.1448	-.0544	-.1809	-.1161

TAIL 2

TABLE VI. - CONTINUED

(i) α = 11.92°

	Cp at y/b of													
	0.02		0.22		0.44		0.56		0.67		0.83		0.98	
x/c	U.S.	L.S.	U.S.	L.S.	U.S.	L.S.	U.S.	L.S.	U.S.	L.S.	U.S.	L.S.	U.S.	L.S.
.05	.1154	.2260	.2840		.2367	.3509	.2129	.3836		.2597			.2846	.2577
.10	.1789	.2469	.2787	.4021	.2530	.3619		.3839	.2685	.3677	.2526	.3540	.2285	.3115
.15	.1595	.2425	.2591	.3817	.2600	.3726			.2581	.3445			.2083	.2833
.20	.1376	.2169	.2489	.3487	.2590	.3676	.2533	.3502	.2579	.3571	.2647	.3652	.2025	.2732
.25	-.0045	.0108			.2559	.3639	.2591	.3625	.2585	.3610	.2586	.3612	.1974	.2646
.30	.0086	.0208							.2534	.3547	.2556	.3514	.1964	.2569
.40	.0134	.0447	-.0060	.0231	.0222	.0617	.0260	.0643	.0363	.0821	.2465	.3410	.1955	.2531
.50			-.0162	.0057	.0137	.0536	.0126	.0479			.0334	.0611	.1901	.2301
.60					.0102	.0438	.0063	.0376	.0100	.0415	-.0078	.0195	-.1069	-.0970
.70	-.0124	.0333	-.0197	.0025	.0036	.0327	-.0207	-.0069	-.1124	-.0958	-.1335	-.1246	-.0956	-.0970
.80	-.0961	-.0682	-.1249	-.1181			-.1256	-.1135	-.1273	-.1224	-.1159	-.1313	-.1278	-.0837
.90	-.0691	-.0640	-.1069	-.1256	-.1040	-.1250	-.1043	-.1201	-.1031	-.1151	-.1081	-.1131		
.95	-.0531	-.0573	-.1063	-.1141			-.0989	-.1083	-.0999	-.1033	-.1071	-.1088		-.1670

TAIL 1

	Cp at y/b of													
	0.02		0.22		0.44		0.56		0.67		0.83		0.98	
x/c	U.S.	L.S.	U.S.	L.S.	U.S.	L.S.	U.S.	L.S.	U.S.	L.S.	U.S.	L.S.	U.S.	L.S.
.05	-.0807	.3195	-.0699	.7392			-.0627	.8513			-.0397	.9768	-.0679	.9183
.10	-.0592	.2686					-.0410	.8206	-.0332	.8400			-.0176	.8241
.15					-.0510	.7178	-.0432	.7562	-.0344	.7781			-.0019	.7433
.20	-.0637	.3509					-.0467	.7169	-.0398	.7560			.0063	.6670
.25	-.1150	.1662	-.1319	.4807	-.0623	.6408	-.0492	.6774	-.0411	.7252	-.0239	.7637	.0068	.6008
.30			-.1710	.1996			-.0536	.6055	-.0432	.6705	-.0309	.7365	.0080	.5526
.40	-.1015	.2406							-.1429	.2284	-.0404	.5921	.0074	.4667
.50					-.1569	.2223	-.1536	.2345	-.1558	.2373	-.1446	.2242	-.0091	.3003
.60	-.0617	.2875	-.1563	.2258			-.1654	.2385	-.1587	.2424	-.1593	.1512	-.1508	-.0795
.70					-.1508	.2240	-.1589	.0785	-.1506	.0115	-.1514	-.0013	-.1493	-.0974
.80	-.1122	.0551	-.1850	.0320	-.1591	-.0023	-.1584	-.0029			-.1508	-.0144		
.90	-.1362	.0199	-.1675	.0209	-.1602	-.0084	-.1592	-.0097	-.1483	-.0076	-.1509	-.0227	-.1479	-.0918
.95			-.1570	.0072	-.1497	-.0082	-.1585	-.0145	-.1514	-.0122	-.1513	-.0300	-.1624	-.1028

TAIL 2

TABLE VI. - CONTINUED

(j) α = 15.92°

	Cp at y/b of													
	0.02		0.22		0.44		0.56		0.67		0.83		0.98	
x/c	U.S.	L.S.	U.S.	L.S.	U.S.	L.S.	U.S.	L.S.	U.S.	L.S.	U.S.	L.S.	U.S.	L.S.
.05	.1579	.2819	.3719		.3059	.4376	.2802	.4636		.3302			.3564	.3140
.10	.2495	.3311	.3590	.5158	.3340	.4515		.4743	.3379	.4431	.3196	.4226	.2799	.3746
.15	.2294	.3283	.3396	.4756	.3363	.4657			.3285	.4228			.2530	.3472
.20	.2046	.2956	.3319	.4415	.3365	.4608	.3166	.4283	.3281	.4410	.3301	.4432	.2582	.3339
.25	.0385	.0529			.3322	.4570	.3329	.4481	.3280	.4465	.3243	.4385	.2563	.3343
.30	.0536	.0683							.3230	.4363	.3186	.4296	.2533	.3258
.40	.0666	.1053	.0328	.0642	.0652	.1091	.0661	.1100	.0754	.1277	.3101	.4140	.2591	.3249
.50			.0201	.0449	.0566	.1010	.0525	.0953			.0680	.0950	.2527	.3225
.60					.0520	.0935	.0320	.0667	.0486	.0874	.0218	.0500	-.0829	-.0722
.70	.0250	.0775	.0158	.0411	.0452	.0809	.0162	.0345	-.0881	-.0637	-.1172	-.1068	[illegible]	-.0548
.80	-.0889	-.0542	-.1093	-.0939			-.1062	-.0866	-.1101	-.0998	-.0967	-.1114	-.1392	-.0572
.90	-.0609	-.0545	-.0906	-.1059	-.0981	-.1048	-.0850	-.0962	-.0815	-.0929	-.0984	-.0914		
.95	-.0474	-.0427	-.0877	-.0948			-.0772	-.0873	-.0773	-.0795	-.0979	-.0973		-.1573

TAIL 1

	Cp at y/b of													
	0.02		0.22		0.44		0.55		0.67		0.83		0.98	
x/c	U.S.	L.S.	U.S.	L.S.	U.S.	L.S.	U.S.	L.S.	U.S.	L.S.	U.S.	L.S.	U.S.	L.S.
.05	-.0766	.1720	-.1318	.8059			-.1361	.9913			-.1315	1.0802	-.1540	1.0429
.10	-.0794	.1438					-.1161	.9203	-.1116	.9222			-.1162	.9076
.15					-.1131	.8003	-.1124	.8399	-.1080	.8669			-.0948	.8321
.20	-.0957	.2340					-.1134	.7897	-.1096	.8300			-.0830	.7422
.25	-.1296	.1405	-.1589	.5119	-.1278	.5966	-.1156	.7345	-.1099	.7739	-.0902	.8290	-.0768	.6772
.30			-.1862	.2561			-.1198	.6422	-.1115	.7042	-.0935	.7840	-.0701	.6210
.40	-.1231	.3181							-.1791	.2614	-.1048	.6224	-.0669	.5174
.50					-.1716	.3186	-.1781	.3142	-.1871	.3089	-.1761	.2752	-.0778	.3248
.60	-.0868	.3972	-.1611	.3645			-.1800	.3419	-.1732	.3372	-.1686	.2219	-.1718	-.0585
.70					-.1663	.3307	-.1769	.1469	-.1673	.0726	-.1662	.0555	-.1672	-.0619
.80	-.1351	.0877	-.1950	.1154	-.1790	.0861	-.1794	.0635			-.1673	.0460		
.90	-.1603	.0954	-.1860	.0662	-.1730	.0742	-.1781	.0652	-.1668	.0555	-.1673	.0389	-.1570	-.0466
.95			-.1812	.0432	-.1692	.0737	-.1729	.0668	-.1695	.0522	-.1681	.0307	-.1710	-.0553

TAIL 2

TABLE VI. - CONCLUDED

(k) α = 19.32°

	Cp at y/b of													
	0.02		0.22		0.44		0.56		0.67		0.83		0.98	
x/c	U.S.	L.S.	U.S.	L.S.	U.S.	L.S.	U.S.	L.S.	U.S.	L.S.	U.S.	L.S.	U.S.	L.S.
.05	.2287	.3865	.4842		.3962	.5476	.3638	.5683		[illegible]			[illegible]	[illegible]
.10	.3323	.4305	.4636	.6482	.4323	.5731		[illegible]	.4189	.5477	.3991	[illegible]	[illegible]	[illegible]
.15	.3171	.4291	.4451	.5860	.4343	.5891			.4152	.5300			[illegible]	.4293
.20	.2882	.3855	.4296	.5533	.4354	.5843	.4072	.5357	.4150	.5505	[illegible]	[illegible]	[illegible]	[illegible]
.25	.0931	.1042			.4293	.5764	.4247	.5557	.4149	.5446	.4053	[illegible]	[illegible]	[illegible]
.30	.1237	.1276							.4115	.5341	.4066	[illegible]	[illegible]	[illegible]
.40	.1338	.1807	.0813	.1126	.1206	.1573	[illegible]	.1556	.1261	.1743	[illegible]	[illegible]	[illegible]	[illegible]
.50			.0673	.0896	.1104	.1474	.1050	.1477			.1093	.1309	[illegible]	[illegible]
.60					.1045	.1353	.0783	.1115	.0959	.1331	.0535	.0811	[illegible]	[illegible]
.70	.0759	.1327	.0612	.0321	.0976	.1223	.0641	.0758	-.0650	-.0467	-.0963	-.0894	[illegible]	-.0880
.80	-.0548	-.0208	-.0822	-.0683			-.0791	-.0621	-.0883	-.0775	-.0767	[illegible]	[illegible]	[illegible]
.90	-.0239	-.0131	-.0697	-.0803	-.0822	-.0817	-.0631	-.0720	-.0553	-.0619	-.0555	-.0661		
.95	-.0057	-.0042	-.0638	-.0676			-.0507	-.0535	-.0503	-.0501	-.0540	-.0638		[illegible]

TAIL 1

	Cp at y/b of													
	0.02		0.22		0.44		0.56		0.67		0.83		0.98	
x/c	U.S.	L.S.	U.S.	L.S.	U.S.	L.S.	U.S.	L.S.	U.S.	L.S.	U.S.	L.S.	U.S.	L.S.
.05	-.1276	.2231	-.1740	.8901			-.1783	1.0855			-.1634	1.1577	-.1838	1.1386
.10	-.1280	.1806					-.1613	1.0164	-.1567	1.0257			-.1546	1.0204
.15					-.1532	.8980	-.1558	.9367	-.1514	.9718			-.1330	.9350
.20	-.1275	.2875					-.1556	.9776	-.1508	.9234			-.1202	.8494
.25	-.1553	.1917	-.1783	.5690	-.1698	.7678	-.1568	.8173	-.1497	.8625	-.1234	.9217	-.1107	.7704
.30			-.1968	.3679			-.1535	.7089	-.1499	.7823	-.1346	.8783	-.1048	.7089
.40	-.1427	.4419							-.1970	.3246	-.1391	.6333	-.1061	.5959
.50					-.1796	.4529	-.1823	.4586	-.1910	.4298	-.1883	.3535	-.1166	.3787
.60	-.1092	.5245	-.1836	.4854			-.1911	.4811	-.1836	.4854	-.1782	.3255	-.1802	-.0263
.70					-.1761	.4841	-.1904	.2417	-.1796	.1529	-.1776	.1380	-.1772	-.0130
.80	-.1523	.1281	-.2067	.1621	-.1893	.1652	-.1921	.1572			-.1785	.1251		
.90	-.1723	.1819	-.1991	.1128	-.1885	.1491	-.1915	.1549	-.1767	.1420	-.1784	.1161	-.1660	.0119
.95			-.1954	.0922	-.1846	.1451	-.1895	.1489	-.1815	.1401	-.1793	.1065	-.1814	.0041

TAIL 2

TABLE VII. - PRESSURE COEFFICIENTS, $\Phi = 22.5°$, $\delta = 0°$, $M = 2.36$
(a) $\alpha = -4.07°$

	Cp at y/b of													
	0.02		0.22		0.44		0.56		0.67		0.83		0.98	
x/c	U.S.	L.S.	U.S.	L.S.	U.S.	L.S.	U.S.	L.S.	U.S.	L.S.	U.S.	L.S.	U.S.	L.S.
.05	.0566	.2328	.2955		.2404	.2149	.2354	.2865		.1696			.2901	.1814
.10	.0675	.1258	.2623	.2249	.2747	.2417		.2581	.2705	.2484	.2548	.2512	.2819	.2511
.15	.0743	.1199	.2347	.2074	.2798	.2411			.2632	.2512			.2417	.2313
.20	.0665	.1080	.2169	.1933	.2722	.2256	.2708	.2664	.2575	.2478	.2665	.2454	.2254	.2112
.25	-.0115	-.0196			.2631	.2247	.2706	.2320	.2708	.2402	.2652	.2484	.2046	.1866
.30	-.0002	-.0033							.2677	.2338	.2637	.2443	.1815	.1663
.40	.0507	.0147	-.0218	-.0476	.0273	-.0066	.0422	-.0019	.0478	.0234	.2586	.2347	.1678	.1508
.50			-.0318	-.0492	.0128	-.0216	.0269	-.0142			.0475	.0089	.1484	.1179
.60					.0053	-.0287	.0372	.0343	.0261	-.0127	.0195	-.0180	-.1320	-.1444
.70	-.0065	-.0136	.0226	-.0122	-.0032	-.0365	-.0098	-.0578	-.1023	-.1283	-.1155	-.1402	-.1272	-.1423
.80	-.0828	-.0893	-.1072	-.1201			-.1324	-.1489	-.1319	-.1474	-.1283	-.1356	-.1342	-.1295
.90	-.0786	-.0995	-.1334	-.1424	-.1375	-.1345	-.1392	-.1335	-.1336	-.1254	-.1305	-.1201		
.95	-.0847	-.1034	-.1339	-.1294			-.1290	-.1276	-.1264	-.1214	-.1215	-.1176		-.1177

TAIL 1

	Cp at y/b of													
	0.02		0.22		0.44		0.56		0.67		0.83		0.98	
x/c	U.S.	L.S.	U.S.	L.S.	U.S.	L.S.	U.S.	L.S.	U.S.	L.S.	U.S.	L.S.	U.S.	L.S.
.05	.2389	.0691	.4465	.1381			.3971	.1097			.4297	.1360	.3294	.1167
.10	.2348	.0319					.4225	.1661	.4291	.1623			.3651	.1443
.15					.4390	.1536	.4298	.1548	.4319	.1523			.3389	.1306
.20	.2235	.0370					.4349	.1496	.4193	.1517			.3246	.1134
.25	.0530	-.0603	.1400	.0752	.4312	.1403	.4382	.1474	.4277	.1524	.4136	.1552	.3166	.1024
.30			.0697	-.0724			.4306	.1341	.4277	.1493	.4232	.1548	.3074	.1005
.40	.0788	-.0379							.1278	-.0356	.4025	.1322	.2930	.0948
.50					.0771	-.0634	.0903	-.0555	.0979	-.0576	.1055	-.0413	.2463	.0534
.60	.1439	-.0103	.0405	-.0858			.0816	-.0659	.0883	-.0620	.0462	-.0921	-.1105	-.1359
.70					.0574	-.0773	-.0215	-.1301	-.0876	-.1441	-.0889	-.1280	-.1146	-.1334
.80	-.0653	-.0992	-.0830	-.1251	-.1014	-.1170	-.1029	-.1200			-.1067	-.1241		
.90	-.0411	-.1305	-.0877	-.1238	-.1198	-.1176	-.1155	-.1184	-.1099	-.1163	-.1177	-.1245	-.1131	-.1557
.95			-.0922	-.1248	-.1249	-.1175	-.1200	-.1182	-.1168	-.1184	-.1230	-.1253	-.1202	-.1689

TAIL 2

TABLE VII. - CONTINUED

(b) α = -2.07°

	Cp at y/b of													
	0.02		0.22		0.44		0.56		0.67		0.83		0.98	
x/c	U.S.	L.S.	U.S.	L.S.	U.S.	L.S.	U.S.	L.S.	U.S.	L.S.	U.S.	L.S.	U.S.	L.S.
.05	.0494	.1518	.2529		.2090	.2513	.2136	.3256		.2022			.2632	.2079
.10	.0929	.1059	.2290	.2705	.2365	.2842		.2912	.2465	.2784	.2372	.2949	.2553	.2655
.15	.0918	.1032	.2136	.2466	.2417	.2805			.2351	.2850			.2101	.2580
.20	.0817	.0946	.1997	.2260	.2393	.2679	.2410	.2649	.2377	.2843	.2413	.2786	.1990	.2315
.25	-.0121	-.0244			.2335	.2650	.2356	.2692	.2413	.2766	.2401	.2811	.1790	.2100
.30	.0026	-.0090							.2376	.2697	.2396	.2756	.1606	.1886
.40	.0375	.0248	-.0243	-.0327	.0128	.0097	.0245	.0186	.0301	.0400	.2321	.2662	.1465	.1724
.50			-.0340	-.0455	.0005	-.0044	.0118	.0039			.0274	.0278	.1323	.1416
.60					-.0051	-.0132	.0217	.0119	.0100	.0061	-.0006	-.0007	-.1345	-.1387
.70	-.0053	.0023	.0032	-.0096	-.0152	-.0211	-.0180	-.0451	-.1158	-.1170	-.1269	-.1316	-.1341	-.1417
.80	-.0823	-.0741	-.1133	-.1114			-.1376	-.1419	-.1380	-.1435	-.1376	-.1386	-.1363	-.1332
.90	-.0794	-.0835	-.1347	-.1351	-.1279	-.1361	-.1366	-.1339	-.1257	-.1247	-.1204	-.1177		
.95	-.0848	-.0885	-.1302	-.1308			-.1237	-.1241	-.1161	-.1169	-.1131	-.1129		-.1110

TAIL 1

	Cp at y/b of													
	0.02		0.22		0.44		0.56		0.67		0.83		0.98	
x/c	U.S.	L.S.	U.S.	L.S.	U.S.	L.S.	U.S.	L.S.	U.S.	L.S.	U.S.	L.S.	U.S.	L.S.
.05	.1710	.1151	.3577	.2036			.3211	.1572			.3505	.1843	.2632	.1660
.10	.1741	.0742					.3437	.2224	.3494	.2130			.3043	.1915
.15					.3527	.2100	.3490	.2081	.3536	.2053			.2788	.1698
.20	.1954	.0757					.3498	.2022	.3417	.2054			.2654	.1511
.25	.0277	-.0288	.1020	.1239	.3521	.1961	.3529	.2020	.3454	.2066	.3352	.2065	.2546	.1368
.30			.0339	-.0378			.3494	.1899	.3427	.2024	.3430	.2063	.2442	.1314
.40	.0293	-.0269							.0816	-.0048	.3296	.1804	.2379	.1254
.50					.0415	-.0339	.0525	-.0248	.0569	-.0269	.0631	-.0140	.1937	.0758
.60	.1093	.0162	-.0093	-.0618			.0452	-.0347	.0489	-.0321	.0068	-.0685	-.1203	-.1317
.70					.0267	-.0530	-.0476	-.1088	-.1078	-.1450	-.1117	-.1411	-.1233	-.1436
.80	-.0743	-.0867	-.1054	-.1385	-.1138	-.1401	-.1218	-.1428			-.1269	-.1207		
.90	-.0631	-.1174	-.1105	-.1293	-.1327	-.1279	-.1325	-.1253	-.1256	-.1162	-.1327	-.1177	-.1236	-.1187
.95			-.1139	-.1285	-.1347	-.1256	-.1310	-.1244	-.1273	-.1181	-.1237	-.1174	-.1106	-.1350

TAIL 2

TABLE VII. - CONTINUED

(c) α = -0.07°

	Cp at y/b of													
	0.02		0.22		0.44		0.56		0.67		0.83		0.98	
x/c	U.S.	L.S.	U.S.	L.S.	U.S.	L.S.	U.S.	L.S.	U.S.	L.S.	U.S.	L.S.	U.S.	L.S.
.05	.0602	.1321	.2235		.1859	.2935	.1950	.3576		.2268			.2481	.2325
.10	.0971	.1322	.2047	.3077	.2100	.3163		.3267	.2259	.3113	.2181	.3178	.2298	.3067
.15	.0945	.1317	.1904	.2845	.2132	.3136			.2140	.3182			.1799	.2805
.20	.0813	.1204	.1798	.2544	.2124	.3027	.2158	.2965	.2146	.3171	.2193	.3119	.1741	.2520
.25	-.0214	-.0255			.2085	.2987	.2139	.3008	.2183	.3081	.2157	.3128	.1560	.2298
.30	-.0066	-.0078							.2153	.3022	.2171	.3063	.1418	.2103
.40	.0150	.0278	-.0322	-.0119	-.0000	.0283	.0097	.0373	.0159	.0564	.2091	.2966	.1348	.1920
.50			-.0398	-.0267	-.0116	.0130	-.0019	.0217			.0165	.0433	.1185	.1604
.60					-.0162	.0042	.0075	.0146	-.0051	.0233	-.0167	.0142	-.1331	-.1307
.70	-.0071	.0287	-.0167	-.0075	-.0257	-.0038	-.0302	-.0306	-.1247	-.1077	-.1354	-.1236	-.1479	-.1375
.80	-.0844	-.0670	-.1205	-.1084			-.1424	-.1337	-.1411	-.1345	-.1293	-.1371	-.1300	-.1435
.90	-.0806	-.0766	-.1345	-.1265	-.1196	-.1411	-.1236	-.1384	-.1181	-.1308	-.1142	-.1215		
.95	-.0839	-.0812	-.1243	-.1244			-.1175	-.1257	-.1132	-.1185	-.1119	-.1137		-.1072

TAIL 1

	Cp at y/b of													
	0.02		0.22		0.44		0.56		0.67		0.33		0.98	
x/c	U.S.	L.S.	U.S.	L.S.	U.S.	L.S.	U.S.	L.S.	U.S.	L.S.	U.S.	L.S.	U.S.	L.S.
.05	.1245	.1472	.2766	.2778			.2528	.2099			.2810	.2421	.2027	.2140
.10	.1219	.1083					.2753	.2846	.2785	.2702			.2461	.2428
.15					.2773	.2724	.2744	.2685	.2816	.2643			.2181	.2171
.20	.1344	.1089					.2768	.2641	.2721	.2657			.2089	.1962
.25	-.0021	-.0001	.0649	.1821	.2718	.2591	.2767	.2621	.2750	.2664	.2680	.2649	.2003	.1783
.30			-.0025	-.0034			.2729	.2467	.2717	.2613	.2720	.2641	.1938	.1717
.40	.0090	.0113							.0386	.0300	.2601	.2347	.1865	.1594
.50					.0062	-.0034	.0153	.0095	.0160	.0069	.0256	.0185	.1489	.1025
.60	.0726	.0459	-.0373	-.0397			.0085	-.0012	.0087	.0015	-.0249	-.0410	-.1268	-.1278
.70					-.0095	-.0196	-.0720	-.0876	-.1280	-.1278	-.1309	-.1341	-.1389	-.1444
.80	-.0782	-.0735	-.1183	-.1276	-.1351	-.1421	-.1393	-.1415			-.1334	-.1288		
.90	-.0792	-.1028	-.1275	-.1302	-.1388	-.1305	-.1311	-.1308	-.1194	-.1176	-.1195	-.1121	-.1117	-.0909
.95			-.1291	-.1249	-.1247	-.1218	-.1204	-.1206	-.1151	-.1134	-.1136	-.1094	-.1032	-.1039

TAIL 2

TABLE VII. - CONTINUED

(d) α = 1.93°

	Cp at y/b of													
	0.02		0.22		0.44		0.56		0.67		0.83		0.98	
x/c	U.S.	L.S.	U.S.	L.S.	U.S.	L.S.	U.S.	L.S.	U.S.	L.S.	U.S.	L.S.	U.S.	L.S.
.05	.0592	.1526	.1997		.1674	.3160	.1758	.3918		.2549			.2236	.2501
.10	.0884	.1694	.1921	.3440	.1380	.3501		.3629	.2052	.3433	.2000	.3458	.2067	.3258
.15	.0869	.1730	.1697	.3236	.1833	.3504			.1935	.3505			.1582	.3022
.20	.0713	.1586	.1608	.2998	.1887	.3381	.1956	.3240	.1940	.3475	.1999	.3450	.1507	.2723
.25	-.0351	-.0182			.1863	.3345	.1931	.3358	.1980	.3395	.1965	.3460	.1399	.2461
.30	-.0224	.0000							.1364	.3361	.1353	.3303	.1314	.2520
.40	-.0115	.0309	-.0435	.0061	-.0118	.0459	-.0050	.0551	.0037	.0732	.1990	.3255	.1262	.2115
.50			-.0515	-.0098	-.0233	.0302	-.0163	.0392			.0046	.0501	.1122	.1816
.60					-.0275	.0218	-.0061	.0253	-.0201	.0406	-.0272	.0304	-.1322	-.1244
.70	-.0169	.0478	-.0377	-.0002	-.0368	.0138	-.0417	-.0159	-.1311	-.0979	-.1431	-.1164	-.1493	-.1320
.80	-.0937	-.0617	-.1312	-.1088			-.1424	-.1243	-.1348	-.1261	-.1257	-.1318	-.1058	-.1414
.90	-.0853	-.0712	-.1238	-.1224	-.1185	-.1376	-.1207	-.1340	-.1177	-.1300	-.1171	-.1330		
.95	-.0873	-.0742	-.1203	-.1189			-.1194	-.1294	-.1154	-.1256	-.1159	-.1210		-.1032

TAIL 1

	Cp at y/b of													
	0.02		0.22		0.44		0.56		0.67		0.83		0.98	
x/c	U.S.	L.S.	U.S.	L.S.	U.S.	L.S.	U.S.	L.S.	U.S.	L.S.	U.S.	L.S.	U.S.	L.S.
.05	.0934	.1607	.2016	.3660			.1885	.2639			.2203	.3057	.1514	.2629
.10	.0869	.1297					.2130	.3524	.2150	.3377			.1951	.2992
.15					.2105	.3489	.2051	.3421	.2163	.3329			.1715	.2759
.20	.0844	.1351					.2063	.3375	.2081	.3322			.1619	.2512
.25	-.0274	.0237	.0208	.2332	.2043	.3284	.2093	.3334	.2112	.3355	.2070	.3292	.1531	.2296
.30			-.0375	.0278			.2065	.3130	.2084	.3319	.2097	.3307	.1486	.2219
.40	.0024	.0481							-.0009	.0704	.1995	.2979	.1439	.2030
.50					-.0273	.0291	-.0207	.0441	-.0202	.0474	-.0058	.0548	.1093	.1372
.60	.0350	.0746	-.0490	-.0135			-.0273	.0316	-.0262	.0405	-.0524	-.0079	-.1354	-.1232
.70					-.0435	.0096	-.0981	-.0688	-.1445	-.1070	-.1468	-.1123	-.1420	-.1282
.80	-.0903	-.0606	-.1313	-.1072	-.1487	-.1269	-.1480	-.1256			-.1292	-.1242		
.90	-.0884	-.0877	-.1420	-.1193	-.1295	-.1385	-.1281	-.1333	-.1206	-.1239	-.1221	-.1293	-.1160	-.1203
.95			-.1339	-.1216	-.1266	-.1297	-.1261	-.1303	-.1221	-.1267	-.1210	-.1271	-.1227	-.1082

TAIL 2

TABLE VII. - CONTINUED

(e) α = 3.93°

	Cp at y/b of													
	0.02		0.22		0.44		0.56		0.67		0.83		0.98	
x/c	U.S.	L.S.	U.S.	L.S.	U.S.	L.S.	U.S.	L.S.	U.S.	L.S.	U.S.	L.S.	U.S.	L.S.
.05	.0511	.1925	.1759		.1303	.3508	.1567	.4205		.2849			.2059	.2340
.10	.0747	.2049	.1643	.3872	.1685	.3879		.3996	.1874	.3790	.1627	.3835	.1893	.3477
.15	.0711	.2162	.1454	.3648	.1556	.3875			.1762	.3839			[illegible]	.3192
.20	.0562	.1992	.1415	.3356	.1681	.3759	.1806	.3569	.1751	.3815	.1935	[illegible]	.1345	.2924
.25	-.0468	-.0052			.1350	.3731	.1744	.3755	.1776	.3765	.1786	.3762	.1253	.2560
.30	-.0362	.0131							.1758	.3730	.1760	.3654	.1212	.2540
.40	-.0302	.0423	-.0559	.0239	-.0242	.0557	-.0169	.0771	-.0078	.0912	.1704	.3553	.1187	.2345
.50			-.0627	.0063	-.0345	.0496	-.0237	.0606			-.0072	.0782	.1035	.2060
.60					-.0386	.0407	-.0136	.0425	-.0322	.0587	-.0393	.0466	-.1322	-.1163
.70	-.0335	.0586	-.0532	.0152	-.0465	.0328	-.0541	.0030	-.1392	-.0887	-.1478	-.1097	-.1266	-.1274
.80	-.1025	-.0535	-.1390	-.1031			-.1345	-.1129	-.1313	-.1171	-.1260	-.1263	-.1207	-.1342
.90	[illegible]	-.0618	-.1252	-.1188	-.1201	-.1293	-.1214	-.1239	-.1205	-.1218	-.1213	-.1331		
.95	-.0679	-.0618	-.1250	-.1162			-.1210	-.1280	-.1192	-.1234	-.1206	-.1231		-.0997

TAIL 1

	Cp at y/b of													
	0.02		0.22		0.44		0.56		0.67		0.83		0.98	
x/c	U.S.	L.S.	U.S.	L.S.	U.S.	L.S.	U.S.	L.S.	U.S.	L.S.	U.S.	L.S.	U.S.	L.S.
.05	.0647	.1664	.1347	.4416			.1298	.3413			.1642	.3738	.1032	.3189
.10	.0578	.1450					.1545	.4362	.1575	.4221			.1464	.3635
.15					.1463	.4282	.1478	.4275	.1565	.4163			.1270	.3465
.20	.0365	.1569					.1473	.4151	.1499	.4186			.1191	.3172
.25	-.0476	.0423	-.0145	.2822	.1409	.3319	.1472	.4110	.1521	.4188	.1537	.4061	.1124	.2950
.30			-.0698	.0594			.1436	.3836	.1492	.4138	.1548	.4117	.1092	.2849
.40	-.0038	.0768							-.0361	.1084	.1446	.3741	.1058	.2604
.50					-.0586	.0585	-.0534	.0758	-.0538	.0831	-.0385	.0972	.0764	.1814
.60	.0096	.1012	-.0632	.0207			-.0617	.0630	-.0580	.0745	-.0803	.0280	-.1412	-.1138
.70					-.0731	.0426	-.1139	-.0439	-.1565	-.0879	-.1432	-.0894	-.1422	-.1132
.80	-.0863	-.0470	-.1410	-.0909	-.1316	-.1089	-.1330	-.1084			-.1318	-.1036		
.90	-.0917	-.0717	-.1536	-.1011	-.1303	-.1230	-.1293	-.1171	-.1257	-.1035	-.1297	-.1112	-.1247	-.1058
.95			-.1344	-.1044	-.1302	-.1253	-.1284	-.1208	-.1287	-.1152	-.1237	-.1161	-.1325	-.1163

TAIL 2

TABLE VII. - CONTINUED

(f) α = 5.93°

	Cp at y/b of													
	0.02		0.22		0.44		0.56		0.67		0.83		0.98	
x/c	U.S.	L.S.	U.S.	L.S.	U.S.	L.S.	U.S.	L.S.	U.S.	L.S.	U.S.	L.S.	U.S.	L.S.
.05	.0398	.2482	.1526		.1357	.3887	.1343	.4490		.3125			.1808	.3068
.10	.0576	.2415	.1465	.4354	.1524	.4272		.4383	.1703	.4114	.1628	.4101	.1640	.3630
.15	.0521	.2623	.1306	.4092	.1516	.4278			.1584	.4110			.1221	.3361
.20	.0381	.2415	.1220	.3777	.1494	.4192	.1631	.3940	.1580	.4135	.1661	.4033	.1175	.3129
.25	-.0574	.0156			.1479	.4175	.1567	.4145	.1600	.4102	.1613	.4051	.1144	.2663
.30	-.0480	.0338							.1574	.4069	.1578	.3990	.1136	.2738
.40	-.0470	.0655	-.0662	.0428	-.0367	.0841	-.0289	.0954	-.0205	.1073	.1506	.3887	.1129	.2579
.50			-.0748	.0243	-.0460	.0670	-.0422	.0797			-.0204	.0968	.1054	.2261
.60					-.0491	.0597	-.0313	.0612	-.0428	.0788	-.0508	.0615	-.1302	-.1077
.70	-.0541	.0702	-.0668	.0323	-.0569	.0510	-.0679	.0190	-.1447	-.0778	-.1344	-.1027	-.1167	-.1225
.80	-.1114	-.0405	-.1262	-.0932			-.1191	-.1033	-.1221	-.1062	-.1228	-.1203	-.1317	-.1193
.90	-.0954	-.0471	-.1231	-.1114	-.1150	-.1196	-.1164	-.1147	-.1175	-.1111	-.1219	-.1275		
.95	-.0792	-.0429	-.1239	-.1101			-.1162	-.1198	-.1170	-.1146	-.1217	-.1282		-.0988

TAIL 1

	Cp at y/b of													
	0.02		0.22		0.44		0.56		0.67		0.83		0.98	
x/c	U.S.	L.S.	U.S.	L.S.	U.S.	L.S.	U.S.	L.S.	U.S.	L.S.	U.S.	L.S.	U.S.	L.S.
.05	.0438	.1637	.0747	.5061			.0736	.4360			.1121	.4669	.0595	.3919
.10	.0391	.1448					.0980	.5350	.1036	.5357			.1012	.4723
.15					.0873	.5007	.0915	.5130	.1005	.5209			.0873	.4455
.20	.0193	.1660					.0901	.4891	.0942	.5100			.0805	.4164
.25	-.0517	.0522	-.0435	.3214	.0808	.4454	.0900	.4696	.0960	.4976	.1026	.5133	.0760	.3896
.30			-.0963	.0887			.0857	.4337	.0936	.4781	.1025	.5080	.0744	.3717
.40	-.0254	.1039							-.0673	.1396	.0932	.4405	.0736	.3358
.50					-.0877	.0880	-.0831	.1060	-.0838	.1132	-.0683	.1330	.0474	.2320
.60	-.0074	.1333	-.0813	.0578			-.0917	.0945	-.0879	.1046	-.1065	.0533	-.1432	-.1053
.70					-.0999	.0751	-.1416	-.0220	-.1464	-.0697	-.1368	-.0715	-.1400	-.1136
.80	-.0863	-.0326	-.1545	-.0709	-.1370	-.0907	-.1339	-.0905			-.1344	-.0856		
.90	-.1001	-.0545	-.1481	-.0813	-.1388	-.1050	-.1330	-.0990	-.1291	-.0905	-.1345	-.0933	-.1392	-.0955
.95			-.1300	-.0850	-.1390	-.1093	-.1326	-.1032	-.1322	-.0970	-.1347	-.0993	-.1525	-.1040

TAIL 2

TABLE VII. - CONTINUED

(g) α = 7.93°

	Cp at y/b of													
	0.02		0.22		0.44		0.56		0.67		0.83		0.98	
x/c	U.S.	L.S.	U.S.	L.S.	U.S.	L.S.	U.S.	L.S.	U.S.	L.S.	U.S.	L.S.	U.S.	L.S.
.05	.0237	.2948	.1370		.1227	.4287	.1052	.4871		.3415			.1628	.3262
.10	.0408	.2780	.1346	.4843	.1374	.4698		.4790	.1537	.4439	.1399	.4559	.1347	.3842
.15	.0346	.3080	.1177	.4564	.1363	.4732			.1411	.4422			.1053	.3533
.20	.0234	.2825	.1034	.4228	.1342	.4681	.1474	.4340	.1407	.4485	.1468	.4386	.1021	.3302
.25	-.0643	.0400			.1322	.4647	.1419	.4630	.1424	.4486	.1421	.4356	.1019	.3106
.30	-.0559	.0574							.1392	.4456	.1391	.4297	.1038	.2966
.40	-.0560	.0944	-.0755	.0629	-.0459	.1076	-.0384	.1178	-.0330	.1295	.1311	.4204	.1016	.2533
.50			-.0827	.0442	-.0559	.0929	-.0530	.1025			-.0324	.1150	.0967	.2491
.60					-.0586	.0845	-.0439	.0807	-.0536	.1006	-.0641	.0754	-.1340	-.0973
.70	-.0635	.0863	-.0767	.0527	-.0657	.0740	-.0808	.0362	-.1410	-.0653	-.1223	-.0951	-.1209	-.1144
.80	-.1197	-.0238	-.1221	-.0803			-.1147	-.0924	-.1175	-.0955	-.1197	-.1131	-.1558	-.0923
.90	-.0982	-.0284	-.1222	-.1007	-.1126	-.1079	-.1137	-.1048	-.1144	-.0999	-.1201	-.1204		
.95	-.0777	-.0220	-.1230	-.0991			-.1136	-.1099	-.1142	-.1041	-.1203	-.1222		-.1025

TAIL 1

	Cp at y/b of													
	0.02		0.22		0.44		0.56		0.67		0.83		0.98	
x/c	U.S.	L.S.	U.S.	L.S.	U.S.	L.S.	U.S.	L.S.	U.S.	L.S.	U.S.	L.S.	U.S.	L.S.
.05	.0340	.1441	.0221	.5541			.0209	.5650			.0697	.6708	.0180	.5999
.10	.0259	.1272					.0435	.6145	.0515	.6466			.0594	.6258
.15					.0330	.5496	.0369	.5725	.0483	.6019			.0540	.5721
.20	.0240	.1555					.0347	.5389	.0412	.5721			.0537	.5205
.25	-.0534	.0534	-.0727	.3568	.0247	.4860	.0341	.5183	.0430	.5497	.0533	.5869	.0514	.4711
.30			-.1153	.1164			.0298	.4738	.0410	.5267	.0519	.5740	.0509	.4343
.40	-.0466	.1322							-.0960	.1628	.0448	.4797	.0485	.3804
.50					-.1130	.1170	-.1098	.1360	-.1110	.1400	-.0952	.1548	.0250	.2525
.60	-.0164	.1647	-.0952	.0997			-.1193	.1267	-.1154	.1352	-.1284	.0826	-.1366	-.1016
.70					-.1206	.1117	-.1521	.0036	-.1392	-.0505	-.1353	-.0527	-.1368	-.1193
.80	-.0953	-.0230	-.1520	-.0531	-.1411	-.0713	-.1396	-.0699			-.1360	-.0672		
.90	-.1100	-.0377	-.1476	-.0625	-.1436	-.0847	-.1337	-.0781	-.1312	-.0711	-.1361	-.0746	-.1298	-.1146
.95			-.1329	-.0693	-.1437	-.0873	-.1395	-.0827	-.1348	-.0769	-.1360	-.0812	-.1494	-.1259

TAIL 2

ORIGINAL PAGE IS
OF POOR QUALITY

TABLE VII.- CONTINUED

(h) α = 9.93°

	Cp at y/b of													
	0.02		0.22		0.44		0.56		0.67		0.83		0.98	
x/c	U.S.	L.S.	U.S.	L.S.	U.S.	L.S.	U.S.	L.S.	U.S.	L.S.	U.S.	L.S.	U.S.	L.S.
.05	.0240	.3511	.1265		.1035	.4722	.0856	.5161		.3702			[illegible]	.3604
.10	.0235	[illegible]	.1258	.5358	.1153	.5134		.5133	.1353	.4784	.1266	[illegible]	[illegible]	[illegible]
.15	.0228	.3509	.1102	.5043	.1198	.5243			.1222	.4776			[illegible]	[illegible]
.20	.0130	.3230	.0991	.4694	.1224	.5138	.1285	.4769	.1203	.4893	.1341	[illegible]	[illegible]	[illegible]
.25	-.0694	[illegible]			.1207	.5124	.1179	.5071	.1208	.4931	.1297	[illegible]	[illegible]	[illegible]
.30	-.0623	.0829							.1170	.4873	.1261	.4678	[illegible]	.3299
.40	-.0673	.1292	-.0826	.0930	-.0523	.1255	-.0500	.1359	-.0462	.4532	.1157	.4560	[illegible]	[illegible]
.50			-.0909	.0652	-.0636	.1126	-.0627	.1233			-.0447	.1332	[illegible]	[illegible]
.60					-.0668	.1033	-.0537	.1014	-.0683	.1239	-.0758	.0332	[illegible]	-.0854
.70	-.0804	.1120	-.0863	.0776	-.0733	.0913	-.0882	.0535	-.1308	-.0528	-.1212	-.0383	[illegible]	[illegible]
.80	-.1305	-.0030	-.1223	-.0552			-.1154	-.0783	-.1179	-.0844	-.1206	-.1062	[illegible]	-.0697
.90	-.0970	-.0080	-.1235	-.0857	-.1141	-.0962	-.1150	-.0913	-.1150	-.0896	-.1213	[illegible]		
.95	-.0845	.0006	-.1242	-.0947			-.1151	-.0966	-.1147	-.0943	-.1216	-.1163		-.0990

TAIL 1

	Cp at y/b of													
	0.02		0.22		0.44		0.56		0.67		0.83		0.98	
x/c	U.S.	L.S.	U.S.	L.S.	U.S.	L.S.	U.S.	L.S.	U.S.	L.S.	U.S.	L.S.	U.S.	L.S.
.05	.0341	.1263	-.0224	.5806			-.0311	.6791			.0101	.8130	-.0255	.7704
.10	.0204	.1074					-.0094	.5720	-.0014	.7090			[illegible]	.7080
.15					-.0182	.5850	-.0148	.5229	-.0029	.6468			.0209	.6452
.20	.0215	.1344					-.0184	.5778	-.0097	.6152			.0221	.5811
.25	-.0575	.0461	-.0915	.3797	-.0275	.5193	-.0193	.5527	-.0091	.5923	.0055	.6334	.0225	.5288
.30			-.1279	.1459			-.0231	.4965	-.0107	.5685	.0008	.6107	.0225	.4858
.40	-.0606	.1488							-.1258	.1797	-.0062	.5027	.0224	.4130
.50					-.1363	.1502	-.1359	.1644	-.1387	.1672	-.1229	.1751	-.0037	.2663
.60	-.0268	.1800	-.1043	.1421			-.1459	.1608	-.1420	.1685	-.1481	.1040	-.1325	-.0949
.70					-.1371	.1434	-.1556	.0263	-.1436	-.0308	-.1410	-.0337	-.1384	-.1147
.80	-.0971	-.0201	-.1555	-.0386	-.1502	-.0523	-.1497	-.0466			-.1407	-.0458		
.90	-.1162	-.0267	-.1522	-.0516	-.1509	-.0610	-.1503	-.0574	-.1413	-.0493	-.1400	-.0535	-.1299	-.1110
.95			-.1375	-.0578	-.1406	-.0611	-.1499	-.0631	-.1432	-.0544	-.1399	-.0605	-.1472	-.1228

TAIL 2

TABLE VII. - CONTINUED

(l) α = 11.93°

	Cp at y/b of													
	0.02		0.22		0.44		0.56		0.67		0.83		0.98	
x/c	U.S.	L.S.	U.S.	L.S.	U.S.	L.S.	U.S.	L.S.	U.S.	L.S.	U.S.	L.S.	U.S.	L.S.
.05	.0156	.4069	.1140		.1095	.5312	.0929	.5724		.4177			.1680	.4024
.10	.0143	.3491	.1129	.6001	.1198	.5765		.5780	.1432	.5399	.1331	.5568	.1236	.4581
.15	.0044	.4044	.0967	.5607	.1176	.5313			.1294	.5384			.1109	.4275
.20	-.0044	.3719	.0842	.5242	.1144	.5839	.1267	.5392	.1272	.5485	.1409	.5337	.1135	.4038
.25	-.0800	.0960			.1105	.5723	.1241	.5696	.1277	.5532	.1360	.5323	.1142	.3859
.30	-.0746	.1132							.1238	.5447	.1324	.5224	.1167	.3727
.40	-.0792	.1631	-.0928	.1078	-.0618	.1562	-.0508	.1707	-.0454	.1838	.1224	.5057	.1128	.3580
.50			-.1016	.0911	-.0730	.1461	-.0678	.1557			-.0434	.1635	.1082	.3168
.60					-.0764	.1364	-.0624	.1288	-.0670	.1538	-.0751	.1115	-.1319	-.0729
.70	-.0860	.1380	-.0959	.1051	-.0826	.1250	-.0947	.0830	-.1279	-.0345	-.1211	-.0760	-.1465	-.0955
.80	-.1376	.0163	-.1222	-.0498			-.1131	-.0613	-.1165	-.0669	-.1206	-.0941	-.1881	-.0478
.90	-.0919	.0125	-.1235	-.0720	-.1131	-.0826	-.1129	-.0734	-.1137	-.0726	-.1214	-.1004		
.95	-.0848	.0233	-.1239	-.0700			-.1129	-.0799	-.1134	-.0780	-.1216	-.1030		-.0861

TAIL 1

	Cp at y/b of													
	0.02		0.22		0.44		0.56		0.67		0.83		0.98	
x/c	U.S.	L.S.	U.S.	L.S.	U.S.	L.S.	U.S.	L.S.	U.S.	L.S.	U.S.	L.S.	U.S.	L.S.
.05	.0362	.1168	-.0647	.6018			-.0758	.7537			-.0544	.8685	-.0750	.8658
.10	.0171	.0996					-.0556	.7146	-.0494	.7559			-.0271	.7729
.15					-.0604	.6171	-.0585	.6617	-.0485	.6897			-.0173	.6991
.20	.0110	.1105					-.0625	.6126	-.0535	.6540			-.0118	.6336
.25	-.0644	.0339	-.1034	.4089	-.0717	.5457	-.0640	.5821	-.0545	.6255	-.0354	.6714	-.0097	.5739
.30			-.1404	.1692			-.0682	.5136	-.0565	.5948	-.0432	.6446	-.0098	.5236
.40	-.0737	.1395							-.1510	.1944	-.0520	.5162	-.0127	.4422
.50					-.1509	.1831	-.1564	.1926	-.1614	.1925	-.1473	.1907	-.0327	.2829
.60	-.0375	.1823	-.1231	.1857			-.1662	.1988	-.1631	.2016	-.1608	.1295	-.1500	-.0867
.70					-.1514	.1749	-.1639	.0534	-.1536	-.0130	-.1516	-.0142	-.1484	-.0997
.80	-.0990	-.0206	-.1699	-.0325	-.1634	-.0278	-.1624	-.0260			-.1513	-.0248		
.90	-.1190	-.0214	-.1615	-.0468	-.1649	-.0319	-.1631	-.0370	-.1531	-.0286	-.1509	-.0306	-.1401	-.0927
.95			-.1489	-.0494	-.1580	-.0312	-.1629	-.0419	-.1557	-.0327	-.1514	-.0372	-.1524	-.1048

TAIL 2

TABLE VII. - CONTINUED

(j) α = 15.93°

	Cp at y/b of													
	0.02		0.22		0.44		0.56		0.67		0.88		0.98	
x/c	U.S.	L.S.	U.S.	L.S.	U.S.	L.S.	U.S.	L.S.	U.S.	L.S.	U.S.	L.S.	U.S.	L.S.
.05	.0274	.5299	.1506		.1403	.7034	.1227	.7272		.5267			.1870	.5059
.10	.0456	.4462	.1496	.7595	.1523	.7764		.7412	.1685	.6393	.1552	.7024	.1314	.5704
.15	.0318	.5261	.1299	.7053	.1506	.7850			.1570	.7036			.1382	.5355
.20	.0229	.4922	.1161	.6652	.1467	.7490	.1484	.7093	.1541	.7321	.1529	.6757	.1462	.5156
.25	-.0609	.1590			.1420	.7224	.1544	.7419	.1540	.7324	.1521	.6363	.1467	.4962
.30	-.0538	.1923							.1489	.7135	.1546	.6636	.1470	.4837
.40	-.0623	.2600	-.0784	.1762	-.0467	.2275	-.0365	.2466	-.0318	.2554	.1453	.6576	.1465	.4732
.50			-.0881	.1582	-.0582	.2146	-.0543	.2297			-.0296	.2512	.1413	.4274
.60					-.0621	.2035	-.0600	.1832	-.0548	.2307	-.0652	.1814	-.1343	-.0335
.70	-.0752	.2188	-.0866	.1862	-.0686	.1937	-.0830	.1415	-.1180	.0057	-.1131	-.0363	-.1725	-.0436
.80	-.1460	.0741	-.1082	-.0047			-.1026	-.0235	-.1069	-.0301	-.1130	-.0575	-.1889	.0063
.90	-.0969	.0757	-.1102	-.0287	-.1023	-.0450	-.1024	-.0374	-.1037	-.0394	-.1146	-.0661		
.95	-.0931	.0933	-.1108	-.0248			-.1025	-.0441	-.1034	-.0469	-.1154	-.0696		-.0398

TAIL 1

	Cp at y/b of													
	0.02		0.22		0.44		0.56		0.67		0.88		0.98	
x/c	U.S.	L.S.	U.S.	L.S.	U.S.	L.S.	U.S.	L.S.	U.S.	L.S.	U.S.	L.S.	U.S.	L.S.
.05	.0491	.0544	-.1192	.6147			-.1460	.8246			-.1383	.8952	-.1538	.9429
.10	.0268	.0782					-.1293	.7688	-.1297	.8106			-.1250	.8452
.15					-.1217	.6618	-.1274	.7172	-.1257	.7561			-.1068	.7726
.20	-.0041	.0896					-.1300	.6585	-.1274	.6978			-.1003	.7030
.25	-.0891	.0052	-.1240	.4470	-.1341	.5776	-.1319	.6152	-.1282	.6541	-.1080	.7103	-.0961	.6375
.30			-.1489	.2083			-.1352	.5377	-.1299	.6094	-.1190	.6736	-.0929	.5843
.40	-.0965	.0854							-.1863	.2209	-.1271	.5235	-.0931	.4846
.50					-.1702	.2528	-.1801	.2587	-.1934	.2371	-.1840	.2271	-.1076	.2987
.60	-.0488	.1445	-.1481	.2725			-.1860	.2744	-.1834	.2667	-.1781	.1802	-.1764	-.0660
.70					-.1632	.2600	-.1836	.0952	-.1751	.0326	-.1756	.0261	-.1733	-.0665
.80	-.1123	-.0337	-.1829	.0065	-.1858	.0255	-.1851	.0210			-.1759	.0228		
.90	-.1320	-.0511	-.1755	-.0259	-.1606	.0095	-.1650	.0195	-.1777	.0109	-.1748	.0207	-.1615	-.0544
.95			-.1626	-.0387	-.1742	.0031	-.1829	.0133	-.1797	.0091	-.1756	.0144	-.1757	-.0652

TAIL 2

TABLE VII. - CONCLUDED

(k) α = 19.92°

	Cp at y/b of													
	0.02		0.22		0.44		0.56		0.67		0.83		0.98	
x/c	U.S.	L.S.	U.S.	L.S.	U.S.	L.S.	U.S.	L.S.	U.S.	L.S.	U.S.	L.S.	U.S.	L.S.
.05	.0606	.7158	.1983		.1827	1.0023	.1652	1.0203		.6971			.2202	.6574
.10	.0899	.5752	.1982	.9409	.1975	1.0146		.9880	.2081	.9717	.1939	.9245	.1590	.7321
.15	.0708	.6759	.1747	.8801	.1966	.9831			.1986	.9703			.1853	.6903
.20	.0616	.6388	.1583	.8291	.1929	.9258	.1891	.9011	.1963	.9608	.2027	.9279	.1943	.6734
.25	-.0344	.2553			.1870	.8791	.1987	.9126	.1955	.9361	.1979	.9280	.1958	.6620
.30	-.0244	.2876							.1909	.9062	.1951	.8974	.1972	.6514
.40	-.0335	.3768	-.0591	.2552	-.0212	.2952	-.0128	.3242	-.0062	.3482	.1867	.8165	.1905	.6378
.50			-.0688	.2387	-.0329	.2887	-.0301	.3091			-.0064	.3122	.1894	.5721
.60					-.0377	.2839	-.0452	.2554	-.0316	.3106	-.0446	.2456	-.1262	.0128
.70	-.0488	.3326	-.0668	.2937	-.0443	.2725	-.0616	.2123	-.1045	.0520	-.0987	-.0021	-.1866	-.0058
.80	-.1347	.1617	-.0866	.0478			-.0865	.0217	-.0908	.0093	-.0985	-.0234	-.1833	.0676
.90	-.0813	.1738	-.0902	.0268	-.0850	-.0035	-.0865	.0040	-.0873	-.0026	-.1006	-.0311		
.95	-.0731	.1875	-.0915	.0376			-.0866	-.0045	-.0874	-.0112	-.1021	-.0344		.0125

TAIL 1

	Cp at y/b of													
	0.02		0.22		0.44		0.56		0.67		0.83		0.98	
x/c	U.S.	L.S.	U.S.	L.S.	U.S.	L.S.	U.S.	L.S.	U.S.	L.S.	U.S.	L.S.	U.S.	L.S.
.05	.0159	.0381	-.1584	.6500			-.1935	.8192			-.1834	.8769	-.2006	.9051
.10	-.0104	.0575					-.1836	.7825	-.1831	.8083			-.1885	.8407
.15					-.1641	.6954	-.1781	.7356	-.1808	.7624			-.1798	.7753
.20	-.0414	.0643					-.1782	.6628	-.1801	.6988			-.1729	.7079
.25	-.1189	-.0157	-.1539	.4831	-.1762	.5846	-.1779	.6030	-.1788	.6417	-.1571	.7029	-.1688	.6427
.30			-.1761	.2660			-.1790	.5154	-.1784	.5842	-.1708	.6606	-.1656	.5890
.40	-.1200	.0728							-.2062	.2389	-.1746	.5027	-.1609	.4881
.50					-.1813	.3227	-.1860	.3439	-.1986	.3337	-.1970	.2707	-.1674	.3037
.60	-.0755	.1532	-.1677	.3268			-.1969	.3583	-.1951	.3592	-.1912	.2696	-.1898	-.0367
.70					-.1794	.3227	-.1973	.1604	-.1897	.0845	-.1904	.0951	-.1846	-.0091
.80	-.1294	-.0355	-.1946	.0408	-.1977	.0640	-.1977	.0687			-.1908	.0840		
.90	-.1519	-.0544	-.1853	.0014	-.1946	.0499	-.1938	.0579	-.1912	.0644	-.1893	.0797	-.1742	.0073
.95			-.1776	-.0160	-.1925	.0425	-.1910	.0517	-.1939	.0594	-.1903	.0737	-.1902	-.0049

TAIL 2

TABLE VIII. - PRESSURE COEFFICIENTS, Φ = 45°, δ = 0°, M = 0.36

(a) α = -4.05°

	Cp at y/b of													
	0.02		0.22		0.44		0.56		0.57		0.83		0.98	
x/c	U.S.	L.S.	U.S.	L.S.	U.S.	L.S.	U.S.	L.S.	U.S.	L.S.	U.S.	L.S.	U.S.	L.S.
.05	.0591	.3161	.3383		.2999	.1709	.2873	.2427		.1354			.3421	.1421
.10	.0927	.0790	.3148	.1722	.3384	.1998		.2329	.3280	.2059	.3055	.2122	.3335	.2141
.15	.0968	.0703	.2847	.1572	.3389	.1983			.3228	.2053			.2922	.1957
.20	.0874	.0606	.2621	.1415	.3270	.1864	.3059	.2859	.3268	.2066	.3215	.2074	.2733	.1724
.25	.0025	-.0158			.3144	.1828	.3257	.1344	.3295	.2221	.3199	.2093	.2484	.1521
.30	.0174	-.0008							.3200	.1964	.3212	.2013	.2257	.1356
.40	.0802	.0100	.0090	-.0724	.0526	-.0278	.0722	-.0215	.0808	-.0046	.3139	.1929	[illegible]	.1221
.50			-.0032	-.0520	.0370	-.0422	.0561	-.0359			.0825	-.0109	[illegible]	.0345
.60					.0299	-.0497	.0179	.0904	.0559	-.0337	.0525	-.0365	-.1204	-.1464
.70	.0179	-.0285	.0505	-.0251	.0239	-.0572	.0140	-.0754	-.0560	-.1392	-.0983	-.1456	-.1135	-.1468
.80	-.0704	-.0559	-.0924	-.1259			-.1188	-.1553	-.1135	-.1425	-.1123	-.1312	-.1139	-.1304
.90	-.0637	-.0935	-.1194	-.1461	-.1316	-.1357	-.1263	-.1369	-.1223	-.1255	-.1189	-.1243		
.95	-.0693	-.0963	-.1231	-.1285			-.1300	-.1342	-.1249	-.1270	-.1229	-.1233		-.1237

TAIL 1

	Cp at y/b of													
	0.02		0.22		0.44		0.56 •		0.57		0.93		0.98	
x/c	U.S.	L.S.	U.S.	L.S.	U.S.	L.S.	U.S.	L.S.	U.S.	L.S.	U.S.	L.S.	U.S.	L.S.
.05	.2212	.0870	.4100	.1680			.3627	.1371			.3933	.1620	.3364	.1335
.10	.2252	.0535					.3892	.1344	.3940	.1893			.3325	.1541
.15					.3930	.1826	.3931	.1325	.4005	.1795			[illegible]	.1505
.20	.2359	.0564					.3995	.1782	.3963	.1816			.3305	.1322
.25	.0599	-.0513	.1289	.0998	.4036	.1694	.4013	.1762	.3916	.1853	.3799	.1506	.2243	.1202
.30			.0554	-.0561			.4002	.1603	.3391	.1925	.3505	.1811	[illegible]	[illegible]
.40	.0434	-.0462							.1106	-.0222	.3708	.1577	[illegible]	[illegible]
.50					.0550	-.0490	.0791	-.0407	.0517	-.0433	.0893	-.0290	.2230	.0595
.60	.1133	-.0197	.0134	-.0800			.0697	-.0508	.0742	-.0473	.0257	-.0316	[illegible]	[illegible]
.70					.0456	-.0646	-.0302	-.1239	-.0954	-.1502	-.1014	-.1333	[illegible]	[illegible]
.80	-.0705	-.0989	-.0981	-.1217	-.1073	-.1171	-.1093	-.1213			-.1175	-.1233		
.90	-.0503	-.1296	-.1044	-.1217	-.1216	-.1168	-.1213	-.1180	-.1155	-.1168	-.1263	-.1230	-.1156	-.1536
.95			-.1043	-.1224	-.1266	-.1166	-.1250	-.1177	-.1222	-.1192	-.1282	-.1230	-.0994	-.1659

TAIL 2

TABLE VIII. - CONTINUED

(b) α = -2.05°

	Cp at y/b of													
	0.02		0.22		0.44		0.56		0.67		0.83		0.98	
x/c	U.S.	L.S.	U.S.	L.S.	U.S.	L.S.	U.S.	L.S.	U.S.	L.S.	U.S.	L.S.	U.S.	L.S.
.05	.0666	[illegible]	.2872		.2292	.2247	.2407	.2381		.1801			[illegible]	[illegible]
.10	.1089	.1853	.2505	.2414	.2666	.2566		.1842	.2763	.2566	[illegible]	[illegible]	[illegible]	[illegible]
.15	.1071	.1325	.2437	.2191	.2733	.2546			.2659	.2607			.2256	[illegible]
.20	.0972	.1827	.2064	.2037	.2701	.2412	.2572	.2426	.2689	.2614	.2535	[illegible]	[illegible]	[illegible]
.25	-.0072	[illegible]			.2526	.2379	.2585	.2455	.2724	.2358	.2572	[illegible]	[illegible]	[illegible]
.30	.0092	[illegible]							.2720	.2431	.2673	[illegible]	[illegible]	[illegible]
.40	.0505	.0154	-.0036	-.0423	.0263	-.0028	.0421	.0061	.0454	.0246	[illegible]	[illegible]	[illegible]	[illegible]
.50			-.0262	-.0536	.0157	-.0165	.0297	-.0086			.0432	[illegible]	.1500	[illegible]
.60					.0093	-.0209	.0250	.0217	.0276	-.0060	[illegible]	[illegible]	[illegible]	[illegible]
.70	.0071	-.1071	.0153	-.0173	-.0014	-.0314	-.0031	-.0541	-.1058	-.1234	-.1176	-.1330	-.1285	[illegible]
.80	-.0775	-.1148	-.1051	-.1162			-.1301	-.1463	-.1310	-.1454	-.1301	-.1326	[illegible]	-.1304
.90	-.0734	[illegible]	-.1283	-.1392	-.1316	-.1328	-.1373	-.1305	-.1307	-.1215	-.1262	-.1174		
.95	-.0737	[illegible]	-.1276	-.1296			-.1272	-.1244	-.1216	-.1177	[illegible]	-.1149		[illegible]

TAIL 1

	Cp at y/b of													
	0.02		0.22		0.44		0.56		0.67		0.83		0.98	
x/c	U.S.	L.S.	U.S.	L.S.	U.S.	L.S.	U.S.	L.S.	U.S.	L.S.	U.S.	L.S.	U.S.	L.S.
.05	.1698	.1200	.3402	.2176			.3079	.1723			.3375	.2029	.2516	.1749
.10	.1693	.0954					.3320	.2370	.3340	.2261			.2923	.2012
.15					.3374	.2247	.3336	.2225	.3402	.2135			.2659	.1804
.20	.1539	.0565					.3376	.2174	.3231	.2224			.2567	.1615
.25	.0270	-.0245	.0970	.1389	.3398	.2104	.3379	.2156	.3322	.2265	.3262	.2223	.2420	.1472
.30			.0253	-.0301			.3339	.2030	.3291	.2234	.3316	.2225	.2339	.1412
.40	.0240	-.0250							.0728	.0029	.3175	.1947	.2252	.1342
.50					.0359	-.0266	.0462	-.0166	.0484	-.0190	.0585	-.0045	.1952	.0943
.60	.0967	.0162	-.0106	-.0582			.0387	-.0258	.0412	-.0247	.0013	-.0635	-.1005	-.1303
.70					.0172	-.0460	-.0517	-.1013	-.1114	-.1418	-.1159	-.1449	-.1267	-.1481
.80	-.0777	-.0853	-.1128	-.1389	-.1221	-.1458	-.1249	-.1476			-.1309	-.1225		
.90	-.0682	-.1158	-.1176	-.1279	-.1356	-.1279	-.1351	-.1240	-.1277	-.1180	-.1310	-.1181	-.1179	-.1138
.95			-.1174	-.1268	-.1325	-.1248	-.1290	-.1227	-.1256	-.1188	-.1189	-.1175	-.1012	-.1370

TAIL 2

TABLE VIII. - CONTINUED

(c) α = -0.04°

	Cp at y/b of													
	0.02		0.22		0.44		0.56		0.67		0.83		0.98	
x/c	U.S.	L.S.	U.S.	L.S.	U.S.	L.S.	U.S.	L.S.	U.S.	L.S.	U.S.	L.S.	U.S.	L.S.
.05	.0639	.1225	.2284		.1923	.2820	.2010	.3576		.3281			.2533	.2333
.10	.0993	.1277	.2100	.3061	.2172	.3147		.3201	.2333	.3120	.2246	.3177	.2352	.3052
.15	.0967	.1281	.1955	.2915	.2203	.3116			.2212	.3181			.1852	.2734
.20	.0837	.1179	.1838	.2621	.2186	.3007	.2259	.2825	.2224	.3171	.2257	.3120	.1786	.2507
.25	-.0195	-.0258			.2145	.2967	.2202	.3010	.2259	.3101	.2231	.3141	.1615	.2278
.30	-.0046	-.0084							.2232	.3035	.2231	.3078	.1463	.2101
.40	.0173	.0271	-.0308	-.0132	.0026	.0263	.0133	.0367	.0201	.0565	.2148	.2981	.1390	.1924
.50			-.0383	-.0276	-.0089	.0117	.0013	.0213			.0197	.0440	.1223	.1609
.60					-.0139	.0033	.0111	.0156	-.0012	.0240	-.0135	.0148	-.1321	-.1301
.70	-.0057	.0275	-.0147	-.0071	-.0233	-.0042	-.0274	-.0304	-.1231	-.1070	-.1335	-.1236	-.1468	-.1370
.80	-.0832	-.0673	-.1198	-.1080			-.1416	-.1331	-.1405	-.1361	-.1298	-.1364	-.1304	-.1425
.90	-.0601	-.0773	-.1346	-.1264	-.1202	-.1389	-.1239	-.1372	-.1173	-.1288	-.1130	-.1192		
.95	-.0842	-.0819	-.1248	-.1233			-.1170	-.1241	-.1123	-.1167	-.1105	-.1121		-.1056

TAIL 1

	Cp at y/b of													
	0.02		0.22		0.44		0.56		0.67		0.83		0.98	
x/c	U.S.	L.S.	U.S.	L.S.	U.S.	L.S.	U.S.	L.S.	U.S.	L.S.	U.S.	L.S.	U.S.	L.S.
.05	.1257	.1417	.2780	.2744			.2556	.2103			.2861	.2447	.2096	.2132
.10	.1221	.1081					.2782	.2832	.2813	.2696			.2523	.2412
.15					.2808	.2719	.2775	.2672	.2840	.2649			.2256	.2162
.20	.1320	.1082					.2799	.2622	.2745	.2674			.2144	.1954
.25	-.0028	-.0011	.0659	.1793	.2761	.2592	.2796	.2607	.2776	.2715	.2737	.2643	.2046	.1776
.30			-.0019	-.0046			.2756	.2455	.2750	.2682	.2804	.2647	.1989	.1706
.40	.0098	.0080							.0406	.0302	.2670	.2363	.1912	.1584
.50					.0073	-.0047	.0164	.0094	.0177	.0065	.0289	.0188	.1525	.1013
.60	.0732	.0454	-.0367	-.0405			.0093	-.0006	.0105	.0012	-.0228	-.0443	-.1266	-.1294
.70					-.0100	-.0208	-.0716	-.0873	-.1271	-.1276	-.1301	-.1361	-.1376	-.1463
.80	-.0793	-.0735	-.1190	-.1283	-.1354	-.1424	-.1390	-.1420			-.1398	-.1283		
.90	-.0797	-.1030	-.1277	-.1306	-.1380	-.1302	-.1314	-.1299	-.1210	-.1166	-.1190	-.1132	-.1125	-.0996
.95			-.1288	-.1253	-.1245	-.1219	-.1204	-.1203	-.1167	-.1134	-.1137	-.1107	-.1025	-.1022

TAIL 2

TABLE VIII. - CONTINUED

(d) α = 1.95°

	Cp at y/b of													
	0.02		0.22		0.44		0.56		0.67		0.83		0.98	
x/c	U.S.	L.S.	U.S.	L.S.	U.S.	L.S.	U.S.	L.S.	U.S.	L.S.	U.S.	L.S.	U.S.	L.S.
.05	.0476	.1489	.1804		.1528	.3433	.1632	.4154		.2740			.2126	.2799
.10	.0708	.1723	.1640	.3587	.1720	.3768		.3803	.1917	.3728	.1884	.3723	.1950	.3486
.15	.0722	.1810	.1504	.3450	.1729	.3740			.1810	.3784			.1467	.3235
.20	.0586	.1675	.1416	.3198	.1725	.3631	.1794	.3356	.1809	.3708	.1963	.3638	.1403	.2919
.25	-.0379	-.0121			.1704	.3580	.1783	.3618	.1844	.3654	.1931	.3701	.1300	.2681
.30	-.0264	.0085							.1322	.3631	.1820	.3634	.1214	.2500
.40	-.0138	.0467	-.0533	.0159	-.0215	.0549	-.0136	.0682	-.0050	.0890	.1742	.3509	.1172	.2308
.50			-.0594	.0002	-.0332	.0397	-.0255	.0512			-.0040	.0747	.1042	.1967
.60					-.0376	.0314	-.0152	.0296	-.0284	.0551	-.0351	.0436	-.1340	-.1222
.70	-.0215	.0603	-.0416	.0127	-.0466	.0238	-.0509	-.0058	-.1356	-.0900	-.1160	-.1066	-.1519	-.1242
.80	-.0938	-.0566	-.1324	-.0975			-.1324	-.1183	-.1299	-.1214	-.1251	-.1242	-.1074	-.1338
.90	-.0869	-.0653	-.1239	-.1138	-.1172	-.1335	-.1201	-.1291	-.1190	-.1251	-.1192	-.1309		
.95	-.0891	-.0685	-.1218	-.1112			-.1192	-.1303	-.1174	-.1254	-.1193	-.1274		-.1060

TAIL 1

	Cp at y/b of													
	0.02		0.22		0.44		0.56		0.67		0.83		0.98	
x/c	U.S.	L.S.	U.S.	L.S.	U.S.	L.S.	U.S.	L.S.	U.S.	L.S.	U.S.	L.S.	U.S.	L.S.
.05	.1003	.1343	.2181	.3446			.2046	.2538			.2351	.2848	.1685	.2440
.10	.0969	.1098					.2272	.3320	.2311	.3194			.2118	.2793
.15					.2267	.3298	.2211	.3235	.2319	.3160			.1863	.2578
.20	.0922	.1128					.2232	.3178	.2237	.3165			.1755	.2335
.25	-.0175	.0143	.0308	.2148	.2206	.3094	.2250	.3145	.2257	.3215	.2240	.3094	.1677	.2139
.30			-.0298	.0155			.2209	.2946	.2228	.3196	.2274	.3109	.1619	.2059
.40	.0085	.0473							.0099	.0617	.2169	.2863	.1555	.1885
.50					-.0201	.0191	-.0120	.0347	-.0106	.0359	.0010	.0425	.1194	.1253
.60	.0380	.0674	-.0464	-.0233			-.0189	.0229	-.0176	.0294	-.0451	-.0183	-.1352	-.1261
.70					-.0361	.0001	-.0921	-.0750	-.1400	-.1120	-.1424	-.1181	-.1393	-.1311
.80	-.0818	-.0648	-.1270	-.1116	-.1476	-.1325	-.1497	-.1304			-.1300	-.1295		
.90	-.0892	-.0915	-.1410	-.1240	-.1304	-.1419	-.1281	-.1384	-.1200	-.1286	-.1195	-.1303	-.1117	-.1193
.95			-.1347	-.1262	-.1261	-.1277	-.1248	-.1299	-.1203	-.1262	-.1180	-.1205	-.1183	-.1058

TAIL 2

TABLE VIII.- CONTINUED

(e) α = 3.95°

	Cp at y/b of													
	0.02		0.22		0.44		0.56		0.67		0.83		0.98	
x/c	U.S.	L.S.	U.S.	L.S.	U.S.	L.S.	U.S.	L.S.	U.S.	L.S.	U.S.	L.S.	U.S.	L.S.
.05	.0283	.2123	.1328		.1176	.4115	.1270	.4753		.3273			.1735	.3334
.10	.0369	.2163	.1251	.4371	.1343	.4440		.4451	.1559	.4359	.1539	.4257	.1623	.4004
.15	.0377	.2441	.1091	.4105	.1340	.4429			.1441	.4385			.1135	.3671
.20	.0270	.2280	.1013	.3735	.1320	.4325	.1505	.3982	.1432	.4311	.1521	.4308	.1098	.3338
.25	-.0592	.0113			.1305	.4224	.1406	.4338	.1461	.4295	.1475	.4308	.1046	.3116
.30	-.0507	.0332							.1444	.4275	.1446	.4238	.1019	.2821
.40	-.0475	.0724	-.0770	.0452	-.0447	.0860	-.0364	.1015	-.0269	.1230	.1382	.4109	.0986	.2702
.50			-.0823	.0285	-.0551	.0701	-.0497	.0835			-.0262	.1365	.0301	.2355
.60					-.0592	.0626	-.0348	.0550	-.0511	.0867	-.0572	.0751	-.1370	-.1130
.70	-.0428	.0909	-.0663	.0430	-.0672	.0544	-.0739	.0217	-.1485	-.0734	-.1398	-.0923	-.1241	-.1130
.80	-.1075	-.0405	-.1356	-.0820			-.1242	-.1021	-.1270	-.1047	-.1268	-.1098	-.1275	-.1204
.90	-.0980	-.0477	-.1278	-.0994	-.1201	-.1197	-.1221	-.1135	-.1225	-.1095	-.1254	-.1181		
.95	-.0888	-.0461	-.1280	-.0964			-.1221	-.1185	-.1221	-.1132	-.1246	-.1214		-.0367

TAIL 1

	Cp at y/b of													
	0.02		0.22		0.44		0.56		0.67		0.83		0.98	
x/c	U.S.	L.S.	U.S.	L.S.	U.S.	L.S.	U.S.	L.S.	U.S.	L.S.	U.S.	L.S.	U.S.	L.S.
.05	.0828	.1086	.1573	.4036			.1532	.3115			.1865	.3330	.1287	.2833
.10	.0854	.0912					.1752	.4013	.1805	.3874			.1716	.3351
.15					.1710	.3971	.1700	.3977	.1799	.3852			.1481	.3144
.20	.0668	.0958					.1706	.3822	.1725	.3886			.1374	.2896
.25	-.0085	.0287	-.0036	.2417	.1668	.3553	.1712	.3765	.1742	.3919	.1753	.3714	.1315	.2668
.30			-.0666	.0329			.1664	.3462	.1712	.3897	.1785	.3750	.1259	.2575
.40	.0028	.0695							-.0201	.0962	.1686	.3437	.1215	.2333
.50					-.0461	.0368	-.0384	.0549	-.0392	.0625	-.0258	.0647	.0890	.1602
.60	.0089	.0800	-.0514	.0055			-.0470	.0423	-.0443	.0528	-.0680	.0116	-.1311	-.1191
.70					-.0633	.0204	-.1115	-.0564	-.1515	-.0999	-.1483	-.1008	-.1391	-.1179
.80	-.0891	-.0527	-.1365	-.0990	-.1321	-.1218	-.1348	-.1193			-.1290	-.1138		
.90	-.0991	-.0763	-.1418	-.1124	-.1297	-.1357	-.1277	-.1291	-.1246	-.1203	-.1254	-.1210	-.1196	-.1144
.95			-.1254	-.1186	-.1280	-.1366	-.1268	-.1312	-.1263	-.1251	-.1250	-.1247	-.1281	-.1257

TAIL 2

TABLE VIII. - CONTINUED

(f) α = 5.95°

	Cp at y/b of													
	0.02		0.22		0.44		0.56		0.67		0.83		0.98	
x/c	U.S.	L.S.	U.S.	L.S.	U.S.	L.S.	U.S.	L.S.	U.S.	L.S.	U.S.	L.S.	U.S.	L.S.
.05	.0054	.2947	.0889		.0865	.4893	.0887	.5387		.3842			.1347	.3871
.10	.0001	.2605	.0870	.5056	.0988	.5244		.5182	.1225	.5131	.1184	.4907	.1242	.4573
.15	.0003	.3111	.0713	.4770	.0981	.5286			.1098	.5041			.0852	.4133
.20	-.0072	.2909	.0636	.4396	.0952	.5093	.1222	.4737	.1092	.5031	.1190	.4973	.0838	.3825
.25	-.0794	.0423			.0938	.4901	.1064	.5093	.1110	.5064	.1151	.4964	.0844	.3593
.30	-.0734	.0656							.1086	.5047	.1107	.4915	.0859	.3401
.40	-.0777	.1085	-.0976	.0749	-.0662	.1176	-.0570	.1339	-.0503	.1610	.1041	.4760	.0841	.3197
.50			-.1034	.0589	-.0768	.1019	-.0714	.1164			-.0484	.1421	.0795	.2813
.60					-.0798	.0947	-.0526	.0862	-.0712	.1199	-.0767	.1101	-.1366	-.1022
.70	-.0644	.1244	-.0895	.0797	-.0867	.0859	-.0953	.0490	-.1409	-.0541	-.1272	-.0752	-.1226	-.1012
.80	-.1180	-.0163	-.1303	-.0625			-.1218	-.0850	-.1245	-.0867	-.1259	-.0949	-.1462	-.1051
.90	-.1085	-.0223	-.1310	-.0817	-.1207	-.1036	-.1215	-.0967	-.1218	-.0918	-.1264	-.1043		
.95	-.0991	-.0170	-.1321	-.0778			-.1217	-.1024	-.1215	-.0963	-.1264	-.1087		-.0863

TAIL 1

	Cp at y/b of													
	0.02		0.22		0.44		0.56		0.67		0.83		0.98	
x/c	U.S.	L.S.	U.S.	L.S.	U.S.	L.S.	U.S.	L.S.	U.S.	L.S.	U.S.	L.S.	U.S.	L.S.
.05	.0963	.0991	.0636	.4444			.0993	.3910			.1405	.3943	.0909	.3425
.10	.1072	.0842					.1193	.4871	.1302	.4806			.1320	.4091
.15					.1106	.4465	.1136	.4638	.1275	.4709			.1116	.3836
.20	.1163	.0940					.1132	.4365	.1206	.4614			.1023	.3660
.25	-.0144	.0306	-.0395	.2707	.1047	.3885	.1137	.4153	.1215	.4467	.1301	.4589	.0975	.3476
.30			-.0807	.0456			.1068	.3816	.1188	.4307	.1316	.4520	.0935	.3291
.40	-.0219	.0689							-.0503	.1181	.1202	.3938	.0905	.2937
.50					-.0724	.0581	-.0681	.0752	-.0681	.0801	-.0519	.0944	.0616	.2041
.60	.0020	.0742	-.0525	.0545			-.0755	.0633	-.0723	.0699	-.0910	.0278	-.1443	-.1137
.70					-.0861	.0402	-.1325	-.0408	-.1529	-.0901	-.1386	-.0860	-.1407	-.1178
.80	-.0897	-.0497	-.1292	-.0878	-.1372	-.1123	-.1338	-.1060			-.1329	-.1016		
.90	-.1071	-.0663	-.1399	-.1065	-.1360	-.1241	-.1323	-.1165	-.1275	-.1091	-.1316	-.1092	-.1259	-.1028
.95			-.1252	-.1141	-.1348	-.1251	-.1318	-.1214	-.1298	-.1149	-.1315	-.1147	-.1353	-.1120

TAIL 2

TABLE VIII. - CONTINUED

(g) α = 7.35°

	Cp at y/b of													
	0.02		0.22		0.44		0.56		0.67		0.83		0.98	
x/c	U.S.	L.S.	U.S.	L.S.	U.S.	L.S.	U.S.	L.S.	U.S.	L.S.	U.S.	L.S.	U.S.	L.S.
.05	[illegible]	[illegible]	.0537		.0566	.5838	.0495	.6112		[illegible]			[illegible]	[illegible]
[illegible]	-.0354	.3058	[illegible]	[illegible]	[illegible]	[illegible]		.5720	[illegible]	[illegible]	[illegible]	[illegible]	[illegible]	[illegible]
[illegible]	-.0349	.3781	.0590	[illegible]	.0562	.6157			.0780	.5357			[illegible]	[illegible]
[illegible]	-.0365	[illegible]	.0295	[illegible]	[illegible]	[illegible]	.0980	[illegible]	[illegible]	[illegible]	[illegible]	[illegible]	[illegible]	[illegible]
[illegible]	-.0992	.0737			[illegible]	.5504	[illegible]	[illegible]	[illegible]	[illegible]	[illegible]	[illegible]	[illegible]	[illegible]
[illegible]	[illegible]	[illegible]							[illegible]	[illegible]	[illegible]	[illegible]	[illegible]	[illegible]
[illegible]	-.1122	.1531	-.1177	[illegible]	-.0951	[illegible]	[illegible]	[illegible]	[illegible]	[illegible]	[illegible]	[illegible]	[illegible]	[illegible]
[illegible]			-.1257	.0926	-.0776	.1342	-.0904	[illegible]			-.0955	[illegible]	[illegible]	[illegible]
[illegible]					-.0903	.1062	[illegible]	[illegible]	[illegible]	[illegible]	[illegible]	[illegible]	[illegible]	[illegible]
[illegible]	-.0855	.1665	[illegible]	.1222	[illegible]	.1135	[illegible]	[illegible]	[illegible]	-.0351	[illegible]	[illegible]	[illegible]	[illegible]
[illegible]	-.1242	.0152	-.1241	-.0396			-.1246	-.0587	-.1289	[illegible]	[illegible]	-.0366	[illegible]	[illegible]
.90	-.1102	.0107	-.1354	-.0368	-.1242	-.0854	-.1243	-.0787	-.1242	[illegible]	-.1287	-.0307		
.95	-.1121	.0172	-.1366	-.0532			-.1240	-.0845	[illegible]	-.0790	-.1294	-.0357		-.0805

TAIL 1

	Cp at y/b of													
	0.02		0.22		0.44		0.56		0.67		0.83		0.98	
x/c	U.S.	L.S.	U.S.	L.S.	U.S.	L.S.	U.S.	L.S.	U.S.	L.S.	U.S.	L.S.	U.S.	L.S.
.05	.0872	.1231	.0378	.4135			.0410	.4977			.0940	.5390	[illegible]	[illegible]
[illegible]	[illegible]	.0815					.0593	[illegible]	.0751	.5205			.0927	[illegible]
[illegible]					.0435	.4715	.0523	.5122	[illegible]	[illegible]			[illegible]	[illegible]
[illegible]	.1048	[illegible]					.0508	.4634	.0547	[illegible]			[illegible]	[illegible]
[illegible]	[illegible]	[illegible]	-.0575	[illegible]	.0408	.4131	.0517	[illegible]	[illegible]	[illegible]	[illegible]	[illegible]	[illegible]	.4157
[illegible]			[illegible]	[illegible]			[illegible]	[illegible]	[illegible]	[illegible]	.0805	[illegible]	[illegible]	[illegible]
[illegible]	-.0137	.0622							[illegible]	.1394	.0599	[illegible]	.0626	[illegible]
[illegible]					-.0934	.0914	-.0960	.0948	[illegible]	[illegible]	-.0801	.1190	[illegible]	[illegible]
[illegible]	[illegible]	[illegible]	-.0714	.0855			-.1024	.0884	[illegible]	.0290	[illegible]	[illegible]	[illegible]	[illegible]
[illegible]					-.1034	.0533	-.1474	-.0256	[illegible]	[illegible]	-.1409	[illegible]	-.1425	[illegible]
[illegible]	-.1045	[illegible]	[illegible]	[illegible]	[illegible]	-.1035	-.1428	-.0927			-.1395	[illegible]		
[illegible]	[illegible]	-.0579	[illegible]	[illegible]	[illegible]	-.1061	-.1425	-.1038	-.1355	-.0947	[illegible]	[illegible]	[illegible]	[illegible]
[illegible]			-.1428	[illegible]	-.1434	-.1053	-.1425	-.1093	-.1392	-.1009	-.1390	-.0992	-.1450	[illegible]

TAIL 2

TABLE VIII. - CONTINUED
(h) α = 9.95°

	Cp at y/b of													
	0.02		0.22		0.44		0.56		0.67		0.83		0.98	
x/c	U.S.	L.S.	U.S.	L.S.	U.S.	L.S.	U.S.	L.S.	U.S.	L.S.	U.S.	L.S.	U.S.	L.S.
.05	-.0596	.4809	.0243		.0372	.7045	.0257	.7255		.5205			.0712	.5236
.10	-.0695	.3532	[illegible]	.6538	.0429	.7275		.7323	.0692	[illegible]	.0441	.5578	.0613	[illegible]
.15	-.0704	.4442	.0263	.6105	.0410	.6952			.0536	.5343			.0548	.5323
.20	[illegible]	[illegible]	-.0015	.5642	.0377	.6654	.0655	.6415	.0504	.5335	.0492	.5847	.0435	[illegible]
.25	-.1222	[illegible]			.0350	.6230	.0511	.6542	.0515	.5209	.0139	.5225	.0475	.4961
.30	[illegible]	[illegible]							.0489	.3478	.0470	.3832	.0503	.4890
.40	-.1240	.2604	-.1302	.1360	-.1015	.1755	-.0912	.1363	-.0839	.2922	.0441	.3115	.0486	.4552
.50			-.1413	.1272	-.1144	.1661	-.1073	.1323			-.0233	.2073	.0440	.3802
.60					-.1180	.1612	-.0315	.1523	-.1059	.1858	-.1035	.1573	-.1610	-.0311
.70	-.1015	.2157	-.1291	.1673	-.1235	.1521	-.1290	.1057	-.1366	-.0151	-.1350	-.0455	-.1745	-.0799
.80	-.1341	.0502	-.1397	-.0156			-.1305	-.0463	-.1330	-.0426	-.1359	-.0664	-.1770	-.0791
.90	-.1363	.0499	-.1416	-.0311	-.1310	-.0665	-.1304	-.0589	-.1313	-.0548	-.1364	-.0774		
.95	-.1147	.0554	-.1419	-.0233			-.1300	-.0547	-.1311	-.0605	-.1354	-.0827		-.0748

TAIL 1

	Cp at y/b of													
	0.02		0.22		0.44		0.56		0.67		0.83		0.98	
x/c	U.S.	L.S.	U.S.	L.S.	U.S.	L.S.	U.S.	L.S.	U.S.	L.S.	U.S.	L.S.	U.S.	L.S.
.05	.0753	.1179	.0528	.3242			-.0276	.5752			.0384	.6894	.0031	.6415
.10	.0845	.0778					-.0105	.5713	.0102	.6037			.0472	.6121
.15					-.0197	.4775	-.0161	.5302	.0076	.5637			.0427	.5597
.20	.1032	.0800					-.0175	.4799	.0008	.5183			.0382	.5084
.25	-.0096	.0039	-.0768	.2308	-.0120	.4218	-.0153	.4536	.0011	.4967	.0256	.5457	.0345	.4625
.30			-.1127	.0434			-.0191	.4067	-.0015	.4780	.0248	.4973	.0320	.4269
.40	-.0120	.0484							-.1205	.1524	.0139	.4240	.0273	.3635
.50					-.1166	.0943	-.1199	.1122	-.1311	.1236	-.1120	.1315	.0029	.2344
.60	.0161	.0509	-.1140	.0904			-.1262	.1062	-.1318	.1130	-.1407	.0661	-.1538	-.1078
.70					-.1083	.0812	-.1615	-.0102	-.1517	-.0665	-.1494	-.0596	-.1494	-.1229
.80	-.1129	-.0726	-.1714	-.0695	-.1638	-.0847	-.1533	-.0799			-.1496	-.0708		
.90	-.1272	-.0811	-.1683	-.0931	-.1535	-.0880	-.1534	-.0894	-.1460	-.0821	-.1495	-.0774	-.1261	-.1167
.95			-.1589	-.1052	-.1458	-.0865	-.1536	-.0943	-.1487	-.0875	-.1500	-.0832	-.1324	-.1265

TAIL 2

ORIGINAL PAGE IS
OF POOR QUALITY

TABLE VIII. - CONTINUED

(i) α = 11.95°

	Cp at y/b of													
	0.02		0.22		0.44		0.56		0.67		0.83		0.98	
x/c	U.S.	L.S.	U.S.	L.S.	U.S.	L.S.	U.S.	L.S.	U.S.	L.S.	U.S.	L.S.	U.S.	L.S.
.05	-.0913	.5927	-.0062		.0075	.8615	-.0026	.8858		.6895			.0612	.6315
.10	-.0997	.4045	-.0131	.7321	.0094	.8092		.9022	.0403	.8302	.0367	.9143	.0420	.7100
.15	-.1025	.5145	-.0238	.6749	.0081	.7709			.0237	.7843			.0350	.5511
.20	-.1013	.4880	-.0323	.6317	.0073	.7226	.0354	.7184	.0194	.7566	.0375	.7872	.0493	.6182
.25	-.1391	.1569			.0063	.6924	.0136	.7152	.0195	.7475	.0340	.7694	.0532	.5735
.30	-.1392	.1888							.0168	.7103	.0295	.7396	.0535	.5387
.40	-.1419	.2540	-.1521	.1768	-.1163	.2070	-.1085	.2240	-.1080	.2562	.0215	.6678	.0492	.4964
.50			-.1575	.1680	-.1308	.2045	-.1244	.2172			-.1015	.2304	.0456	.4151
.60					-.1342	.1987	-.1066	.1915	-.1261	.2216	-.1252	.1870	-.1684	-.0733
.70	-.1120	.2785	-.1397	.2193	-.1383	.1916	-.1394	.1378	-.1396	.0048	-.1416	-.0339	-.1829	-.0692
.80	-.1444	.1122	-.1444	.0159			-.1357	-.0229	-.1384	-.0281	-.1416	-.0334	-.1725	-.0683
.90	-.1204	.0941	-.1465	.0047	-.1364	-.0417	-.1358	-.0349	-.1370	-.0346	-.1427	-.0640		
.95	-.1170	.0965	-.1466	.0185			-.1356	-.0409	-.1368	-.0407	-.1432	-.0688		-.0647

TAIL 1

	Cp at y/b of													
	0.02		0.22		0.44		0.56		0.67		0.83		0.98	
x/c	U.S.	L.S.	U.S.	L.S.	U.S.	L.S.	U.S.	L.S.	U.S.	L.S.	U.S.	L.S.	U.S.	L.S.
.05	.0508	.1078	.0734	.2918			-.0893	.5911			-.0336	.7281	-.0501	.7236
.10	.0633	.0651					-.0737	.5587	-.0556	.6158			-.0053	.6604
.15					-.0536	.4531	-.0753	.5220	-.0552	.5729			-.0027	.6011
.20	.0796	.0511					-.0699	.4807	-.0610	.5346			-.0043	.5463
.25	-.0263	-.0176	-.0479	.2220	-.0499	.4064	-.0649	.4520	-.0514	.5024	-.0271	.5402	-.0067	.4969
.30			-.0928	.0360			-.0663	.4056	-.0628	.4772	-.0345	.5282	-.0085	.4567
.40	-.0198	.0306							-.1503	.1555	-.0432	.4208	-.0123	.3914
.50					-.1388	.1060	-.1391	.1287	-.1557	.1503	-.1435	.1338	-.0333	.2454
.60	.0070	.0342	-.1130	.0896			-.1465	.1286	-.1531	.1406	-.1653	.0791	-.1643	-.0997
.70					-.1467	.0961	-.1738	.0023	-.1643	-.0503	-.1627	-.0467	-.1636	-.1135
.80	-.1057	-.0858	-.1701	-.0805	-.1741	-.0733	-.1706	-.0705			-.1625	-.0561		
.90	-.1140	-.1013	-.1827	-.1020	-.1726	-.0744	-.1683	-.0784	-.1600	-.0710	-.1620	-.0604	-.1511	-.1073
.95			-.1665	-.1102	-.1691	-.0745	-.1661	-.0813	-.1642	-.0762	-.1622	-.0658	-.1622	-.1197

TAIL 2

TABLE VIII. - CONTINUED

(j) α = 15.95°

	Cp at y/b of													
	0.02		0.22		0.44		0.56		0.67		0.33		0.98	
x/c	U.S.	L.S.	U.S.	L.S.	U.S.	L.S.	U.S.	L.S.	U.S.	L.S.	U.S.	L.S.	U.S.	L.S.
.05	-.1115	.7230	-.0122		.0092	1.0963	-.0016	1.1120		1.1020			.0506	1.0945
.10	-.1037	.5250	-.0187	.9890	.0114	.9921		.9983	.0453	1.0380	.0431	1.0992	.0391	.9533
.15	-.1120	.6840	-.0211	.8336	.0081	.9465			.0278	.9663			.0629	.8152
.20	-.1137	.5052	-.1410	.7852	.0034	.9855	.0269	.9822	.0234	.9552	.0434	.9700	.0717	.7553
.25	-.1497	.2466			-.0004	.8369	.0173	.9727	.0236	.9105	.0377	.9437	.0719	.5970
.30	-.1533	.2901							.0154	.2570	.0325	.8863	.0666	.6519
.40	-.1535	.3745	-.1610	.2619	-.1230	.2950	-.1098	.2920	-.1063	.3074	.0230	.7671	.0502	.5939
.50			-.1665	.2505	-.1391	.2926	-.1285	.3007			-.1019	.2705	.0304	.4872
.60					-.1419	.2934	-.1185	.2659	-.1257	.0073	-.1241	.0391	-.1723	-.0518
.70	-.1312	.4212	-.1415	.3517	-.1449	.2893	-.1437	.2220	-.1431	.0542	-.1452	.0033	-.1875	-.0455
.80	-.1623	.2288	-.1470	.1098			-.1382	.0328	-.1410	.0213	-.1458	-.0137	-.1752	-.0374
.90	-.1321	.1853	-.1471	.1047	-.1372	.0195	-.1390	.0194	-.1395	.0136	-.1474	-.0227		
.95	-.1362	.1357	-.1467	.1145			-.1381	.0125	-.1393	.0060	-.1485	-.0275		-.0387

TAIL 1

	Cp at y/b of													
	0.02		0.22		0.44		0.56		0.67		0.83		0.98	
x/c	U.S.	L.S.	U.S.	L.S.	U.S.	L.S.	U.S.	L.S.	U.S.	L.S.	U.S.	L.S.	U.S.	L.S.
.05	.0311	.0380	.0653	.1535			-.1750	.5219			-.1533	.6737	-.1659	.7336
.10	.0462	.0081					-.1614	.4905	-.1667	.5434			-.1367	.6667
.15					-.1324	.4000	-.1553	.4597	-.1652	.5217			-.1256	.6210
.20	.0577	.0047					-.1537	.4357	-.1650	.4976			-.1217	.5626
.25	-.0323	-.0659	-.0720	.1670	-.1326	.3735	-.1521	.4099	-.1633	.4695	-.1380	.5147	-.1205	.5127
.30			-.1156	.0039			-.1582	.3575	-.1637	.4270	-.1513	.4936	-.1207	.4692
.40	-.0260	-.0219							-.1953	.1294	-.1566	.3754	-.1205	.3903
.50					-.1724	.1198	-.1805	.1442	-.1945	.1595	-.1954	.1438	-.1289	.2290
.60	-.0024	.0028	-.1330	.0583			-.1926	.1449	-.1915	.1768	-.1910	.1057	-.1875	-.0866
.70					-.1814	.1289	-.2003	.0136	-.1870	-.0264	-.1898	-.0245	-.1821	-.0851
.80	-.1150	-.1053	-.1842	-.1037	-.1973	-.0505	-.1979	-.0558			-.1893	-.0318		
.90	-.1271	-.1256	-.1938	-.1235	-.1986	-.0673	-.1977	-.0620	-.1855	-.0570	-.1887	-.0377	-.1744	-.0756
.95			-.1804	-.1291	-.1975	-.0747	-.1969	-.0646	-.1869	-.0585	-.1900	-.0432	-.1898	-.0868

TAIL 2

TABLE VIII. - CONCLUDED
(k) α = 19.35°

	Cp at y/b of													
	0.02		0.22		0.44		0.56		0.67		0.83		0.98	
x/c	U.S.	L.S.	U.S.	L.S.	U.S.	L.S.	U.S.	L.S.	U.S.	L.S.	U.S.	L.S.	U.S.	L.S.
.05	-.1122	.8465	-.0037		.0161	1.3348	-.0070	1.3626		1.4197			.0081	1.3467
.10	-.0929	.6713	-.0053	1.0874	.0274	1.2181		1.2395	.0579	1.2783	.0431	1.3153	.0292	1.1435
.15	-.1011	.8480	-.0175	1.0243	.0256	1.1544			.0434	1.2057			.0937	.9851
.20	-.1006	.8110	-.0301	.9656	.0218	1.0746	.0389	1.0743	.0410	1.1440	.0541	1.1569	.1038	.9100
.25	-.1409	.3480			.0162	1.0075	.0338	1.0476	.0410	1.0848	.0489	1.1122	.1031	.9362
.30	-.1459	.4091							.0339	1.0145	.0432	1.0300	.0901	.7827
.40	-.1459	.5162	-.1563	.3622	-.1161	.3737	-.1024	.3690	-.0993	.3704	.0323	.8715	.0731	.7025
.50			-.1621	.3803	-.1310	.3970	-.1216	.4010			-.0970	.3252	-.0155	.5686
.60					-.1353	.4029	-.1212	.3714	-.1197	.4042	-.1174	.3074	-.1718	-.0264
.70	-.1363	.5829	-.1358	.5975	-.1386	.4009	-.1374	.3188	-.1344	.1119	-.1389	.0512	-.1876	-.0266
.80	-.1537	.3467	-.1402	.2356			-.1304	.0945	-.1338	.0776	-.1404	.0365	-.1717	-.0081
.90	-.1622	.2860	-.1413	.1910	-.1305	.1226	-.1303	.0786	-.1321	.0689	-.1414	.0293		
.95	-.1608	.2918	-.1412	.1991			-.1308	.0706	-.1318	.0606	-.1428	.0245		.0018

TAIL 1

	Cp at y/b of													
	0.02		0.22		0.44		0.56		0.67		0.83		0.98	
x/c	U.S.	L.S.	U.S.	L.S.	U.S.	L.S.	U.S.	L.S.	U.S.	L.S.	U.S.	L.S.	U.S.	L.S.
.05	.0028	-.0095	-.0224	.1419			-.1956	.4973			-.1928	.5789	-.2075	.6291
.10	.0172	-.0362					-.1856	.4807	-.1922	.5035			-.1981	.5944
.15					-.1625	.4087	-.1817	.4616	-.1903	.4872			-.1924	.5587
.20	.0421	-.0325					-.1818	.4376	-.1898	.4657			-.1893	.5149
.25	-.0575	-.0865	-.1109	.1584	-.1720	.3849	-.1853	.4066	-.1903	.4368	-.1743	.4603	-.1880	.4689
.30			-.1475	.0088			-.1893	.3445	-.1911	.3935	-.1898	.4358	-.1888	.4303
.40	-.0486	-.0406							-.2099	.1288	-.1940	.3313	-.1872	.3580
.50					-.1850	.1638	-.1928	.1708	-.2087	.1728	-.2070	.1519	-.1911	.2110
.60	-.0309	-.0220	-.1593	.0574			-.2054	.1827	-.2062	.1901	-.2044	.1234	-.2030	-.0643
.70					-.1912	.1691	-.2125	.0389	-.1994	-.0089	-.2041	-.0112	-.1953	-.0539
.80	-.1412	-.1171	-.1985	-.1012	-.2095	-.0389	-.2109	-.0393			-.2043	-.0179		
.90	-.1566	-.1394	-.2023	-.1238	-.2099	-.0629	-.2097	-.0524	-.1995	-.0352	-.2027	-.0204	-.1850	-.0449
.95			-.1938	-.1316	-.2095	-.0720	-.2090	-.0591	-.2034	-.0396	-.2036	-.0251	-.2001	-.0555

TAIL 2

TABLE IX. - PRESSURE COEFFICIENTS, $\Phi = 67.5°$, $\delta = 0°$, $M = 2.36$

(a) $\alpha = -4.10°$

	Cp at y/b of													
	0.02		0.22		0.44		0.56		0.67		0.83		0.98	
x/c	U.S.	L.S.	U.S.	L.S.	U.S.	L.S.	U.S.	L.S.	U.S.	L.S.	U.S.	L.S.	U.S.	L.S.
.05	.0353	.3486	.3732		.3367	.1453	.3253	.2114		.1134			.3865	.1187
.10	.1515	.0652	.3545	.1534	.3733	.1720		.2271	.3652	.1817	.3448	.1901	.3728	.1866
.15	.1547	.0520	.3267	.1353	.3723	.1719			.3589	.1751			.3266	.1712
.20	.1464	.0433	.3066	.1201	.3605	.1614	.2809	.3134	.3621	.1796	.3519	.1853	.3072	.1534
.25	.0045	-.0453			.3468	.1565	.3609	.1688	.3654	.1775	.3608	.1858	.2807	.1299
.30	.0241	-.0323							.3645	.1708	.3645	.1730	.2551	.1134
.40	.0999	-.0082	.0365	-.0778	.0738	-.0440	.0903	-.0355	.0997	-.0185	.3578	.1674	.2428	.1055
.50			.0247	-.0782	.0582	-.0575	.0747	-.0512			.1046	-.0253	.2235	.0855
.60					.0503	-.0645	-.0226	.1252	.0775	-.0481	.0746	-.0490	-.1123	-.1445
.70	.0399	-.0249	.0637	-.0397	.0452	-.0717	.0334	-.0869	-.0737	-.1469	-.0867	-.1517	-.1079	-.1545
.80	-.0703	-.0829	-.0787	-.1296			-.1075	-.1482	-.1077	-.1362	-.1022	-.1325	-.1110	-.1317
.90	-.0551	-.0911	-.1065	-.1487	-.1211	-.1306	-.1171	-.1382	-.1105	-.1312	-.1092	-.1292		
.95	-.0609	-.0930	-.1113	-.1311			-.1210	-.1351	-.1144	-.1302	-.1149	-.1287		-.1344

TAIL 1

	Cp at y/b of													
	0.02		0.22		0.44		0.56		0.67		0.83		0.98	
x/c	U.S.	L.S.	U.S.	L.S.	U.S.	L.S.	U.S.	L.S.	U.S.	L.S.	U.S.	L.S.	U.S.	L.S.
.05	.1922	.1245	.3564	.2178			.3168	.1731			.3448	.1984	.2525	.1614
.10	.1937	.0928					.3435	.2357	.3416	.2266			.2900	.1960
.15					.3460	.2250	.3425	.2232	.3493	.2194			.2723	.1806
.20	.1943	.0934					.3442	.2200	.3379	.2217			.2615	.1599
.25	.0425	-.0300	.1039	.1446	.3507	.2121	.3461	.2182	.3416	.2256	.3362	.2197	.2509	.1472
.30			.0330	-.0294			.3446	.2022	.3396	.2235	.3418	.2217	.2391	.1439
.40	.0188	-.0358							.0789	.0013	.3279	.1973	.2350	.1350
.50					.0431	-.0260	.0525	-.0184	.0520	-.0215	.0638	-.0072	.1930	.0907
.60	.0748	-.0114	.0057	-.0614			.0457	-.0276	.0460	-.0258	.0049	-.0656	-.1148	-.1251
.70					.0223	-.0437	-.0449	-.1081	-.1096	-.1406	-.1166	-.1423	-.1336	-.1361
.80	-.0792	-.0916	-.1208	-.1303	-.1212	-.1377	-.1209	-.1361			-.1324	-.1212		
.90	-.0661	-.1198	-.1263	-.1243	-.1365	-.1240	-.1316	-.1200	-.1260	-.1142	-.1342	-.1180	-.0937	-.1449
.95			-.1233	-.1247	-.1325	-.1215	-.1285	-.1185	-.1263	-.1154	-.1227	-.1182	-.1001	-.1618

TAIL 2

TABLE IX. - CONTINUED

(b) α = -2.10°

	Cp at y/b of													
	0.02		0.22		0.44		0.56		0.67		0.83		0.98	
x/c	U.S.	L.S.	U.S.	L.S.	U.S.	L.S.	U.S.	L.S.	U.S.	L.S.	U.S.	L.S.	U.S.	L.S.
.05	.0877	.1247	.3072		.2595	.2075	.2596	.2805		.1676			.3225	.1727
.10	.1320	.0898	.2845	.2206	.2904	.2379		.2524	.2965	.2404	.2644	.2485	.3031	.2460
.15	.1280	.0860	.2657	.2008	.2949	.2382			.2852	.2378			.2555	.2461
.20	.1176	.0767	.2488	.1867	.2903	.2255	.2950	.2296	.2880	.2440	.2927	.2473	.2440	.2020
.25	-.0048	-.0357			.2831	.2212	.2875	.2289	.2908	.2398	.2911	.2479	.2212	.1771
.30	.0136	-.0218							.2883	.2340	.2894	.2400	.2009	.1636
.40	.0601	.0060	.0030	-.0471	.0386	-.0107	.0519	-.0030	.0593	.0155	.2836	.2329	.1854	.1463
.50			-.0082	-.0578	.0256	-.0248	.0393	-.0176			.0591	.0096	.1722	.1219
.60					.0184	-.0320	.0185	.0243	.0392	-.0146	.0292	-.0188	-.1239	-.1368
.70	.0167	-.0085	.0213	-.0252	.0083	-.0389	.0066	-.0621	-.0993	-.1282	-.1105	-.1413	-.1212	-.1493
.80	-.0763	-.0749	-.0995	-.1208			-.1246	-.1492	-.1236	-.1434	-.1240	-.1271	-.1330	-.1298
.90	-.0705	-.0885	-.1226	-.1410	-.1314	-.1322	-.1331	-.1300	-.1267	-.1216	-.1285	-.1172		
.95	-.0753	-.0932	-.1243	-.1285			-.1291	-.1266	-.1240	-.1189	-.1224	-.1158		-.1176

TAIL 1

	Cp at y/b of													
	0.02		0.22		0.44		0.56		0.67		0.83		0.98	
x/c	U.S.	L.S.	U.S.	L.S.	U.S.	L.S.	U.S.	L.S.	U.S.	L.S.	U.S.	L.S.	U.S.	L.S.
.05	.1595	.1364	.3152	.2432			.2843	.1912			.3172	.2183	.2329	.1893
.10	.1555	.1040					.3099	.2582	.3090	.2455			.2733	.2173
.15					.3120	.2460	.3068	.2434	.3159	.2403			.2490	.1955
.20	.1610	.1045					.3113	.2400	.3066	.2428			.2408	.1757
.25	.0227	-.0153	.0816	.1604	.3115	.2334	.3127	.2386	.3097	.2457	.3058	.2417	.2259	.1599
.30			.0145	-.0172			.3096	.2251	.3064	.2441	.3118	.2425	.2181	.1540
.40	.0108	-.0225							.0573	.0184	.2986	.2145	.2118	.1452
.50					.0244	-.0148	.0342	-.0045	.0360	-.0075	.0468	.0069	.1723	.0951
.60	.0782	.0164	-.0152	-.0502			.0273	-.0138	.0292	-.0130	-.0090	-.0558	-.1206	-.1264
.70					.0055	-.0343	-.0590	-.0922	-.1173	-.1354	-.1226	-.1421	-.1327	-.1464
.80	-.0812	-.0815	-.1237	-.1400	-.1289	-.1456	-.1297	-.1457			-.1369	-.1195		
.90	-.0748	-.1112	-.1274	-.1276	-.1406	-.1271	-.1367	-.1224	-.1277	-.1120	-.1223	-.1135	-.1060	-.1123
.95			-.1233	-.1258	-.1260	-.1229	-.1234	-.1185	-.1191	-.1126	-.1145	-.1130	-.0992	-.1313

TAIL 2

TABLE IX. - CONTINUED

(c) α = -0.10°

	Cp at y/b of													
	0.02		0.22		0.44		0.56		0.67		0.83		0.98	
x/c	U.S.	L.S.	U.S.	L.S.	U.S.	L.S.	U.S.	L.S.	U.S.	L.S.	U.S.	L.S.	U.S.	L.S.
.05	.0746	.1098	.2324		.1965	.2772	.2054	.3531		.2255			.2623	.2321
.10	.1033	.1249	.2139	.3008	.2210	.3094		.3166	.2360	.3080	.2299	.3160	.2432	.3073
.15	.0999	.1251	.2001	.2763	.2243	.3078			.2236	.3142			.1930	.2820
.20	.0863	.1149	.1889	.2579	.2226	.2972	.2419	.2778	.2250	.3128	.2318	.3108	.1870	.2527
.25	-.0178	-.0268			.2184	.2942	.2235	.2972	.2280	.3058	.2293	.3128	.1687	.2298
.30	-.0026	-.0094							.2250	.2995	.2295	.3065	.1539	.2123
.40	.0203	.0259	-.0285	-.0141	.0049	.0255	.0139	.0349	.0212	.0545	.2218	.2976	.1463	.1936
.50			-.0368	-.0283	-.0068	.0103	.0018	.0199			.0236	.0440	.1298	.1625
.60					-.0126	.0019	.0128	.0144	.0010	.0230	-.0097	.0148	-.1299	-.1259
.70	-.0040	.0266	-.0137	-.0076	-.0222	-.0054	-.0266	-.0316	-.1219	-.1074	-.1313	-.1236	-.1452	-.1377
.80	-.0831	-.0673	-.1189	-.1083			-.1410	-.1336	-.1381	-.1356	-.1310	-.1361	-.1294	-.1422
.90	-.0808	-.0775	-.1342	-.1268	-.1220	-.1385	-.1245	-.1365	-.1175	-.1271	-.1124	-.1170		
.95	-.0839	-.0823	-.1251	-.1236			-.1170	-.1232	-.1121	-.1151	-.1095	-.1104		-.1023

TAIL 1

	Cp at y/b of													
	0.02		0.22		0.44		0.56		0.67		0.83		0.98	
x/c	U.S.	L.S.	U.S.	L.S.	U.S.	L.S.	U.S.	L.S.	U.S.	L.S.	U.S.	L.S.	U.S.	L.S.
.05	.1246	.1385	.2800	.2719			.2542	.2104			.2877	.2395	.2125	.2138
.10	.1200	.1089					.2768	.2818	.2810	.2676			.2547	.2405
.15					.2797	.2696	.2761	.2663	.2849	.2636			.2272	.2144
.20	.1251	.1086					.2795	.2617	.2761	.2658			.2167	.1931
.25	.0016	-.0013	.0646	.1789	.2751	.2578	.2799	.2602	.2795	.2679	.2728	.2640	.2056	.1757
.30			-.0037	-.0055			.2766	.2449	.2761	.2666	.2806	.2640	.1993	.1668
.40	.0087	.0028							.0410	.0345	.2669	.2388	.1923	.1571
.50					.0064	-.0046	.0172	.0090	.0186	.0061	.0288	.0156	.1538	.1017
.60	.0717	.0426	-.0353	-.0414			.0098	-.0008	.0114	.0009	-.0232	-.0456	-.1278	-.1277
.70					-.0111	-.0209	-.0712	-.0873	-.1268	-.1280	-.1313	-.1372	-.1379	-.1447
.80	-.0797	-.0732	-.1206	-.1281	-.1370	-.1424	-.1388	-.1415			-.1412	-.1239		
.90	-.0798	-.1027	-.1284	-.1315	-.1365	-.1306	-.1315	-.1284	-.1204	-.1150	-.1198	-.1116	-.1117	-.0928
.95			-.1288	-.1257	-.1238	-.1222	-.1204	-.1193	-.1153	-.1124	-.1148	-.1094	-.1013	-.1036

TAIL 2

TABLE IX. - CONTINUED

(d) α = 1.91°

	Cp at y/b of													
	0.02		0.22		0.44		0.56		0.67		0.83		0.98	
x/c	U.S.	L.S.	U.S.	L.S.	U.S.	L.S.	U.S.	L.S.	U.S.	L.S.	U.S.	L.S.	U.S.	L.S.
.05	.0513	.1515	.1677		.1428	.3557	.1545	.4295		.2874			.2069	.2981
.10	.0624	.1655	.1525	.3797	.1614	.3895		.3935	.1810	.3863	.1804	.3846	.1925	.3630
.15	.0645	.1810	.1393	.3551	.1625	.3872			.1702	.3930			.1430	.3410
.20	.0514	.1687	.1303	.3264	.1516	.3770	.1855	.3486	.1701	.3836	.1785	.3840	.1379	.3102
.25	-.0372	-.0089			.1588	.3701	.1670	.3759	.1734	.3778	.1755	.3860	.1276	.2965
.30	-.0253	.0130							.1712	.3753	.1751	.3796	.1195	.2645
.40	-.0106	.0571	-.0590	.0211	-.0278	.0619	-.0209	.0749	-.0122	.0990	.1672	.3654	.1159	.2456
.50			-.0538	.0054	-.0403	.0459	-.0330	.0578			-.0086	.0837	.1029	.2082
.60					-.0454	.0368	-.0104	.0335	-.0344	.0626	-.0387	.0535	-.1344	-.1206
.70	-.0226	.0677	-.0411	.0206	-.0543	.0295	-.0575	-.0006	-.1386	-.0861	-.1470	-.1030	-.1532	-.1205
.80	-.0923	-.0540	-.1337	-.0910			-.1269	-.1154	-.1297	-.1174	-.1259	-.1186	-.1096	-.1299
.90	-.0882	-.0611	-.1279	-.1094	-.1183	-.1310	-.1205	-.1267	-.1201	-.1216	-.1208	-.1261		
.95	-.0884	-.0646	-.1235	-.1031			-.1200	-.1293	-.1188	-.1234	-.1199	-.1265		-.1054

TAIL 1

	Cp at y/b of													
	0.02		0.22		0.44		0.56		0.67		0.83		0.98	
x/c	U.S.	L.S.	U.S.	L.S.	U.S.	L.S.	U.S.	L.S.	U.S.	L.S.	U.S.	L.S.	U.S.	L.S.
.05	.1090	.1262	.2439	.3125			.2249	.2329			.2589	.2594	.1916	.2268
.10	.1041	.1015					.2462	.3072	.2520	.2938			.2347	.2569
.15					.2474	.2931	.2431	.2963	.2536	.2918			.2072	.2377
.20	.1028	.1026					.2458	.2893	.2449	.2908			.1938	.2140
.25	-.0062	.0044	.0454	.1961	.2415	.2945	.2473	.2882	.2475	.2930	.2458	.2882	.1863	.1942
.30			-.0210	.0026			.2429	.2692	.2451	.2917	.2514	.2893	.1784	.1876
.40	.0115	.0283							.0233	.0514	.2407	.2648	.1701	.1741
.50					-.0096	.0085	.0000	.0217	.0017	.0217	.0128	.0221	.1329	.1124
.60	.0507	.0557	-.0446	-.0344			-.0072	.0100	-.0051	.0160	-.0340	-.0331	-.1345	-.1290
.70					-.0250	-.0096	-.0828	-.0833	-.1356	-.1205	-.1372	-.1276	-.1393	-.1361
.80	-.0843	-.0723	-.1226	-.1175	-.1444	-.1385	-.1466	-.1355			-.1345	-.1347		
.90	-.0893	-.0991	-.1373	-.1298	-.1340	-.1388	-.1293	-.1402	-.1194	-.1295	-.1181	-.1190	-.1124	-.1093
.95			-.1363	-.1288	-.1261	-.1252	-.1233	-.1263	-.1180	-.1208	-.1156	-.1126	-.1155	-.1006

TAIL 2

TABLE IX. - CONTINUED
(e) α = 3.90°

	Cp at y/b of													
	0.02		0.22		0.44		0.56		0.67		0.83		0.98	
x/c	U.S.	L.S.	U.S.	L.S.	U.S.	L.S.	U.S.	L.S.	U.S.	L.S.	U.S.	L.S.	U.S.	L.S.
.05	.0219	.2332	.1054		.0949	.4491	.1088	.5116		.3609			.1565	.3736
.10	.0191	.2113	.0992	.4596	.1098	.4831		.4827	.1315	.4800	.1353	.4581	.1492	.4424
.15	.0226	.2467	.0841	.4343	.1096	.4788			.1207	.4777			.1014	.4034
.20	.0141	.2326	.0774	.3987	.1078	.4628	.1374	.4353	.1199	.4694	.1315	.4676	.0973	.3770
.25	-.0614	.0158			.1055	.4470	.1162	.4380	.1225	.4664	.1280	.4633	.0931	.3435
.30	-.0533	.0416							.1210	.4635	.1257	.4657	.0924	.3243
.40	-.0472	.0915	-.0887	.0564	-.0575	.0590	-.0506	.1119	-.0404	.1432	.1196	.4461	.0906	.3068
.50			-.0890	.0415	-.0689	.0809	-.0637	.0962			-.0387	.1277	.0804	.2625
.60					-.0738	.0735	-.0372	.0655	-.0637	.1014	-.0674	.0968	-.1386	-.1101
.70	-.0339	.1109	-.0682	.0630	-.0816	.0659	-.0861	.0313	-.1506	-.0644	-.1355	-.0805	-.1270	-.1089
.80	-.1022	-.0365	-.1456	-.0683			-.1244	-.0957	-.1282	-.0972	-.1282	-.0988	-.1251	-.1104
.90	-.0990	-.0403	-.1340	-.0878	-.1223	-.1128	-.1244	-.1076	-.1246	-.1024	-.1275	-.1011		
.95	-.0894	-.0392	-.1305	-.0867			-.1247	-.1121	-.1244	-.1065	-.1270	-.1126		-.1027

TAIL 1

	Cp at y/b of													
	0.02		0.22		0.44		0.56		0.67		0.83		0.98	
x/c	U.S.	L.S.	U.S.	L.S.	U.S.	L.S.	U.S.	L.S.	U.S.	L.S.	U.S.	L.S.	U.S.	L.S.
.05	.1510	.0931	.1831	.3583			.1942	.2607			.2262	.2778	.1667	.2422
.10	.1446	.0749					.2123	.3423	.2225	.3284			.2095	.2846
.15					.2087	.3456	.2088	.3381	.2226	.3273			.1825	.2653
.20	.1261	.0915					.2090	.3326	.2130	.3259			.1721	.2450
.25	.0103	-.0062	.0286	.2050	.2017	.3120	.2097	.3222	.2142	.3300	.2151	.3197	.1646	.2217
.30			-.0379	.0066			.2041	.2992	.2102	.3279	.2195	.3201	.1575	.2164
.40	-.0012	.0355							.0022	.0745	.2054	.2975	.1489	.1936
.50					-.0248	.0179	-.0190	.0352	-.0179	.0403	-.0034	.0361	.1145	.1264
.60	.0323	.0571	-.0411	-.0225			-.0249	.0218	-.0243	.0295	-.0502	-.0143	-.1389	-.1281
.70					-.0432	-.0006	-.0971	-.0756	-.1448	-.1115	-.1454	-.1149	-.1410	-.1269
.80	-.1064	-.0760	-.1272	-.1129	-.1498	-.1346	-.1511	-.1295			-.1291	-.1258		
.90	-.1122	-.0955	-.1436	-.1221	-.1325	-.1451	-.1309	-.1386	-.1224	-.1305	-.1205	-.1304	-.1139	-.1227
.95			-.1289	-.1278	-.1292	-.1307	-.1276	-.1360	-.1224	-.1286	-.1195	-.1247	-.1230	-.1264

TAIL 2

TABLE IX. - CONTINUED

(f) α = 5.90°

	C_p at y/b of													
	0.02		0.22		0.44		0.56		0.67		0.83		0.98	
x/c	U.S.	L.S.	U.S.	L.S.	U.S.	L.S.	U.S.	L.S.	U.S.	L.S.	U.S.	L.S.	U.S.	L.S.
.05	-.0162	.3300	.0496		.0523	.5693	.0646	.6154		.4380			.1087	.4661
.10	-.0260	.2527	.0487	.5469	.0636	.5987		.5935	.0884	.5960	.0913	.5464	.1073	.5317
.15	-.0217	.3160	.0354	.5092	.0631	.5743			.0755	.5809			.0655	.4823
.20	-.0264	.3022	.0280	.4679	.0598	.5458	.0938	.5276	.0745	.5724	.0893	.5778	.0656	.4611
.25	-.0886	.0490			.0577	.5225	.0717	.5465	.0764	.5618	.0854	.5812	.0683	.4270
.30	-.0834	.0783							.0751	.5485	.0810	.5661	.0706	.4027
.40	-.0861	.1343	-.1149	.0925	-.0859	.1320	-.0772	.1488	-.0693	.1859	.0758	.5255	.0702	.3839
.50			-.1148	.0796	-.0977	.1164	-.0913	.1329			-.0654	.1700	.0631	.3221
.60					-.1003	.1116	-.0642	.1020	-.0896	.1392	-.0919	.1358	-.1403	-.0996
.70	-.0578	.1598	-.0964	.1148	-.1070	.1042	-.1118	.0654	-.1343	-.0447	-.1285	-.0606	-.1282	-.0993
.80	-.1101	-.0084	-.1415	-.0419			-.1251	-.0740	-.1273	-.0769	-.1285	-.0806	-.1513	-.0980
.90	-.1097	-.0109	-.1392	-.0621	-.1260	-.0917	-.1251	-.0864	-.1250	-.0818	-.1293	-.0913		
.95	-.1130	-.0071	-.1388	-.0606			-.1250	-.0916	-.1247	-.0864	-.1292	-.0964		-.0930

TAIL 1

	C_p at y/b of													
	0.02		0.22		0.44		0.56		0.67		0.83		0.98	
x/c	U.S.	L.S.	U.S.	L.S.	U.S.	L.S.	U.S.	L.S.	U.S.	L.S.	U.S.	L.S.	U.S.	L.S.
.05	.2222	.0341	.1234	.3334			.1563	.3086			.1933	.2923	.1432	.2651
.10	.2194	.0206					.1723	.3971	.1866	.3783			.1862	.3194
.15					.1597	.3799	.1676	.3897	.1856	.3813			.1603	.3018
.20	.1704	.0611					.1661	.3695	.1754	.3752			.1498	.2792
.25	.0138	-.0193	.0005	.1766	.1592	.3319	.1666	.3510	.1753	.3725	.1825	.3630	.1404	.2636
.30			-.0348	-.0119			.1634	.3184	.1709	.3615	.1842	.3663	.1345	.2561
.40	-.0075	.0329							-.0214	.0869	.1689	.3239	.1260	.2345
.50					-.0400	.0272	-.0361	.0409	-.0395	.0532	-.0233	.0587	.0934	.1568
.60	.0108	.0598	-.0397	.0007			-.0424	.0294	-.0447	.0378	-.0675	.0003	-.1447	-.1239
.70					-.0618	.0023	-.1038	-.0636	-.1524	-.1088	-.1507	-.1048	-.1433	-.1219
.80	-.1248	-.0791	-.1282	-.1094	-.1468	-.1351	-.1470	-.1245			-.1302	-.1180		
.90	-.1308	-.0962	-.1390	-.1205	-.1351	-.1459	-.1322	-.1349	-.1259	-.1268	-.1262	-.1253	-.1203	-.1203
.95			-.1305	-.1243	-.1330	-.1354	-.1305	-.1373	-.1272	-.1293	-.1257	-.1289	-.1278	-.1321

TAIL 2

TABLE IX. - CONTINUED

(g) α = 7.90°

	Cp at y/b of													
	0.02		0.22		0.44		0.56		0.67		0.83		0.98	
x/c	U.S.	L.S.	U.S.	L.S.	U.S.	L.S.	U.S.	L.S.	U.S.	L.S.	U.S.	L.S.	U.S.	L.S.
.05	-.0543	.4256	.0041		.0160	.7240	.0226	.7733		.5936			.0647	.5922
.10	-.0699	.2995	.0003	.6263	.0232	.6990		.7132	.0495	.7295	.0514	.7035	.0664	.6737
.15	-.0647	.3893	-.0093	.5763	.0214	.6585			.0351	.6873			.0374	.6121
.20	-.0652	.3736	-.0164	.5316	.0176	.6202	.0575	.6111	.0341	.6628	.0507	.6941	.0463	.5727
.25	-.1130	.0866			.0151	.5987	.0297	.6191	.0355	.6444	.0473	.6815	.0543	.5225
.30	-.1101	.1197							.0343	.6220	.0426	.6530	.0580	.4902
.40	[illegible]	.1832	-.1393	.1291	-.1095	.1648	-.0355	.1504	-.0548	.2100	.0365	.5927	.0553	[illegible]
.50			-.1396	.1202	-.1227	.1551	-.1156	.1684			-.0887	.2034	.0491	.3525
.60					-.1258	.1514	-.0669	.1413	-.1121	.1750	-.1138	.1667	-.1538	-.0902
.70	-.0949	.2186	-.1237	.1718	-.1306	.1447	-.1334	.0994	-.1389	-.0254	-.1368	-.0437	-.1508	-.1010
.80	-.1335	.0312	-.1448	-.0089			-.1339	-.0516	-.1348	-.0533	-.1363	-.0637	-.1687	-.0993
.90	-.1193	.0260	-.1459	-.0318	-.1337	-.0668	-.1335	-.0643	-.1336	-.0583	-.1371	-.0746		
.95	-.1351	.0281	-.1467	-.0251			-.1336	-.0695	-.1336	-.0628	-.1371	-.0795		-.0951

TAIL 1

	Cp at y/b of													
	0.02		0.22		0.44		0.56		0.67		0.83		0.98	
x/c	U.S.	L.S.	U.S.	L.S.	U.S.	L.S.	U.S.	L.S.	U.S.	L.S.	U.S.	L.S.	U.S.	L.S.
.05	.2459	.0086	.1257	.1768			.1045	.3833			.1577	.3454	.1151	.3032
.10	.2598	-.0119					.1224	.4665	.1420	.4585			.1564	.3740
.15					.0925	.4111	.1142	.4373	.1399	.4452			.1363	.3663
.20	.2234	-.0038					.1112	.3943	.1308	.4181			.1228	.3484
.25	.0366	-.0742	-.0041	.1165	.1149	.3464	.1110	.3683	.1293	.3970	.1459	.4154	.1131	.3304
.30			-.0176	-.0406			.1065	.3360	.1248	.3767	.1466	.3975	.1081	.3110
.40	.0058	.0125							-.0487	.0965	.1342	.3336	.1006	.2739
.50					-.0624	.0286	-.0536	.0556	-.0662	.0656	-.0440	.0774	.0707	.1789
.60	.0037	.0495	-.0450	-.0025			-.0605	.0408	-.0672	.0480	-.0847	.0126	-.1502	-.1217
.70					-.0570	.0093	-.1213	-.0615	-.1577	-.1036	-.1436	-.0993	-.1414	-.1241
.80	-.1323	-.0750	-.1416	-.1068	-.1501	-.1282	-.1368	-.1232			-.1338	-.1113		
.90	-.1411	-.0980	-.1473	-.1202	-.1368	-.1366	-.1341	-.1324	-.1298	-.1236	-.1322	-.1188	-.1239	-.1118
.95			-.1321	-.1259	-.1313	-.1346	-.1340	-.1355	-.1316	-.1285	-.1321	-.1233	-.1304	-.1206

TAIL 2

TABLE IX. - CONTINUED

(h) α = 9.90°

	Cp at y/b of													
	0.02		0.22		0.44		0.56		0.67		0.83		0.98	
x/c	U.S.	L.S.	U.S.	L.S.	U.S.	L.S.	U.S.	L.S.	U.S.	L.S.	U.S.	L.S.	U.S.	L.S.
.05	-.1040	.4999	-.0378		-.0190	.8551	-.0153	.8972		.8515			.0256	.9887
.10	-.1122	.3479	-.0441	.6875	-.0142	.7790		.8073	.0174	.8279	.0213	.8413	.0355	.8035
.15	-.1061	.4539	-.0525	.6355	-.0171	.7344			.0010	.7748			.0229	.7086
.20	-.1016	.4411	-.0592	.5946	-.0216	.6869	.0177	.6899	-.0017	.7459	.0185	.7870	.0360	.6460
.25	-.1354	.1214			-.0246	.6547	-.0077	.6892	-.0006	.7213	.0147	.7616	.0412	.5862
.30	-.1333	.1613							-.0019	.6863	.0086	.7241	.0413	.5452
.40	-.1366	.2316	-.1593	.1683	-.1314	.1980	-.1200	.2080	-.1174	.2311	.0012	.6433	.0358	.4866
.50			-.1572	.1660	-.1453	.1964	-.1371	.2081			-.1106	.2228	.0319	.3875
.60					-.1484	.1945	-.1112	.1836	-.1329	.2164	-.1320	.1921	-.1707	-.0836
.70	-.1175	.2835	-.1400	.2297	-.1507	.1883	-.1494	.1398	-.1478	.0022	-.1483	-.0264	-.1772	-.1028
.80	-.1581	.0791	-.1533	.0291			-.1448	-.0244	-.1458	-.0272	-.1485	-.0443	-.1811	-.1025
.90	-.1412	.0664	-.1554	.0100	-.1444	-.0379	-.1444	-.0371	-.1449	-.0319	-.1492	-.0535		
.95	-.1347	.0640	-.1559	.0143			-.1444	-.0422	-.1447	-.0371	-.1496	-.0587		-.1039

TAIL 1

	Cp at y/b of													
	0.02		0.22		0.44		0.56		0.67		0.83		0.98	
x/c	U.S.	L.S.	U.S.	L.S.	U.S.	L.S.	U.S.	L.S.	U.S.	L.S.	U.S.	L.S.	U.S.	L.S.
.05	.1945	.0393	.1791	-.0450			.0198	.4831			.1114	.4878	.0789	.4157
.10	.2149	.0151					.0332	.5062	.0790	.5177			.1196	.4797
.15					.0715	.3802	.0294	.4584	.0739	.4800			.1063	.4424
.20	.2203	.0083					.0463	.4083	.0641	.4392			.0926	.4023
.25	.0379	-.0877	.0150	.0193	.0777	.3379	.0653	.3839	.0644	.4121	.0989	.4239	.0835	.3684
.30			-.0166	-.0774			.0749	.3511	.0636	.3904	.0978	.4003	.0733	.3417
.40	.0284	-.0576							-.0779	.1089	.0868	.3453	.0730	.2939
.50					-.0538	.0396	-.0773	.0673	-.0831	.0785	-.0711	.0834	.0447	.1886
.60	.0134	.0079	-.0332	-.0521			-.0754	.0556	-.0828	.0584	-.1072	.0220	-.1532	-.1180
.70					-.0649	.0299	-.1225	-.0531	-.1611	-.0969	-.1401	-.0932	-.1431	-.1272
.80	-.1305	-.0918	-.1427	-.1294	-.1497	-.1021	-.1521	-.1131			-.1380	-.1040		
.90	-.1438	-.1137	-.1518	-.1365	-.1457	-.1146	-.1422	-.1186	-.1379	-.1166	-.1373	-.1113	-.1311	-.1074
.95			-.1387	-.1399	-.1369	-.1136	-.1372	-.1211	-.1397	-.1227	-.1372	-.1164	-.1354	-.1164

TAIL 2

TABLE IX. - CONTINUED
(l) α = 11.89°

	Cp at y/b of													
	0.02		0.22		0.44		0.56		0.67		0.83		0.98	
x/c	U.S.	L.S.	U.S.	L.S.	U.S.	L.S.	U.S.	L.S.	U.S.	L.S.	U.S.	L.S.	U.S.	L.S.
.05	-.1508	.5592	-.0763		-.0547	.9429	-.0533	.9861		.9873			-.0420	1.0455
.10	-.1465	.3938	-.0819	.7476	-.0509	.8560		.8825	-.0142	.9247	-.0085	.3717	-.0140	.9880
.15	-.1370	.5104	-.0890	.6975	-.0535	.8103			-.0313	.9534			-.0001	.7720
.20	-.1380	.5033	-.0957	.6579	-.0576	.7570	-.0247	.7693	-.0359	.8268	-.0107	.8566	.0157	.7020
.25	-.1515	.1553			-.0604	.7157	-.0430	.7530	-.0352	.7906	-.0148	.8274	.0242	.6372
.30	-.1480	.2048							-.0366	.7461	-.0220	.7819	.0256	.5888
.40	-.1529	.3051	-.1732	.2132	-.1498	.2340	-.1387	.2342	-.1387	.2495	-.0307	.6775	.0195	.5191
.50			-.1637	.2158	-.1644	.2407	-.1570	.2492			-.1308	.2366	.0035	.4051
.60					-.1664	.2420	-.1386	.2319	-.1531	.2587	-.1504	.2142	-.1761	-.0771
.70	-.1209	.3650	-.1480	.3105	-.1604	.2388	-.1565	.1802	-.1537	.0295	-.1564	-.0085	-.1875	-.0975
.80	-.1595	.1300	-.1590	.0773			-.1517	.0047	-.1536	.0005	-.1569	-.0236	-.2001	-.0991
.90	-.1708	.1086	-.1620	.0511	-.1524	-.0006	-.1517	-.0080	-.1525	-.0045	-.1582	-.0322		
.95	-.1553	.1003	-.1620	.0473			-.1517	-.0131	-.1524	-.0102	-.1587	-.0373		-.1005

TAIL 1

	Cp at y/b of													
	0.02		0.22		0.44		0.56		0.67		0.83		0.98	
x/c	U.S.	L.S.	U.S.	L.S.	U.S.	L.S.	U.S.	L.S.	U.S.	L.S.	U.S.	L.S.	U.S.	L.S.
.05	.1463	.0526	.2896	-.0998			-.0755	.4837			.0495	.6076	.0336	.5509
.10	.1650	.0228					-.0372	.4696	-.0154	.5413			.0766	.5339
.15					.0310	.2181	.0030	.4162	-.0109	.4959			.0673	.4806
.20	.1916	.0181					.0259	.3828	-.0017	.4534			.0573	.4354
.25	.0135	-.0794	.0343	-.0441	.0061	.2010	.0273	.3648	.0145	.4257	.0408	.4391	.0491	.3952
.30			-.0157	-.1128			.0165	.3304	.0233	.4034	.0367	.4261	.0449	.3661
.40	.0245	-.0769							-.0999	.1128	.0267	.3597	.0398	.3130
.50					-.0820	.0150	-.0745	.0597	-.1020	.0867	-.1037	.0905	.0127	.2024
.60	.0287	-.0695	-.0322	-.0418			-.0797	.0517	-.0942	.0726	-.1310	.0319	-.1481	-.1135
.70					-.0955	.0268	-.1316	-.0311	-.1644	-.0929	-.1461	-.0844	-.1455	-.1270
.80	-.1295	-.1406	-.1453	-.1221	-.1689	-.1147	-.1650	-.0871			-.1458	-.0962		
.90	-.1440	-.1564	-.1546	-.1341	-.1616	-.1273	-.1583	-.1007	-.1477	-.1006	-.1455	-.1018	-.1358	-.1076
.95			-.1446	-.1387	-.1525	-.1312	-.1483	-.1081	-.1449	-.1030	-.1450	-.1069	-.1470	-.1179

TAIL 2

TABLE IX. - CONTINUED

(j) α = 15.90°

Cp at y/b of

	0.02		0.22		0.44		0.56		0.67		0.83		0.98	
x/c	U.S.	L.S.	U.S.	L.S.	U.S.	L.S.	U.S.	L.S.	U.S.	L.S.	U.S.	L.S.	U.S.	L.S.
.05	-.1724	.6144	-.1267		-.1001	1.1048	-.1115	1.1551		1.2249			-.1002	1.2349
.10	-.1873	.4733	-.1294	.8807	-.0919	1.0186		1.0453	-.0565	1.0933	-.0630	1.1374	-.0639	1.0457
.15	-.1801	.6082	-.1370	.8340	-.0934	.9646			-.0682	1.0200			-.0300	.9083
.20	-.1720	.6129	-.1436	.7888	-.0985	.8938	-.0527	.9018	-.0727	.9711	-.0535	.9991	-.0114	.8250
.25	-.1787	.2220			-.1024	.8305	-.0821	.8734	-.0735	.9174	-.0556	.9620	-.0060	.7434
.30	-.1624	.2872							-.0762	.8499	-.0608	.8938	-.0055	.6897
.40	-.1901	.4497	-.1823	.3153	-.1715	.3100	-.1595	.2971	-.1618	.2910	-.0700	.7544	-.0200	.5021
.50			-.1805	.3285	-.1857	.3392	-.1798	.3404			-.1537	.2852	-.0302	.4639
.60					-.1776	.3526	-.1553	.3213	-.1752	.3564	-.1705	.2815	-.1991	-.0553
.70	-.1432	.4999	-.1610	.5000	-.1717	.3577	-.1667	.2784	-.1692	.0866	-.1719	.0427	-.1363	-.0707
.80	-.1740	.2325	-.1778	.1693			-.1671	.0701	-.1678	.0633	-.1725	.0294	-.2008	-.0661
.90	-.1871	.1888	-.1766	.1134	-.1668	.1314	-.1672	.0633	-.1678	.0575	-.1738	.0209		
.95	-.1745	.1770	-.1735	.1117			-.1672	.0657	-.1677	.0508	-.1745	.0152		-.0710

TAIL 1

Cp at y/b of

	0.02		0.22		0.44		0.56		0.67		0.83		0.98	
x/c	U.S.	L.S.	U.S.	L.S.	U.S.	L.S.	U.S.	L.S.	U.S.	L.S.	U.S.	L.S.	U.S.	L.S.
.05	.1683	-.0237	.1649	-.1093			-.1107	.1226			-.0995	.6294	-.0781	.6540
.10	.1866	-.0421					-.0861	.1250	-.1138	.3230			-.0384	.5800
.15					-.0500	.0176	-.0683	.1149	-.0954	.3095			-.0374	.5308
.20	.1949	-.0428					-.0668	.1088	-.0802	.2962			-.0431	.4804
.25	.0194	-.1227	-.0135	-.0820	-.0669	.0140	-.0755	.1096	-.0745	.2895	-.0789	.4524	-.0484	.4364
.30			-.0503	-.1461			-.0906	.0973	-.0782	.2817	-.0775	.4351	-.0498	.4060
.40	.0107	-.1121							-.1509	.0561	-.0612	.3542	-.0520	.3463
.50					-.1095	-.0855	-.1266	-.0147	-.1454	.0609	-.1401	.0927	-.0695	.2116
.60	-.0009	-.1023	-.0594	-.1260			-.1362	-.0069	-.1416	.0660	-.1606	.0328	-.1619	-.1071
.70					-.1110	-.0680	-.1695	-.0811	-.1829	-.0830	-.1709	-.0740	-.1612	-.1195
.80	-.1412	-.1647	-.1565	-.1733	-.1778	-.1486	-.1903	-.1248			-.1698	-.0789		
.90	-.1579	-.1850	-.1688	-.1828	-.1843	-.1547	-.1842	-.1297	-.1718	-.1037	-.1689	-.0814	-.1517	-.1163
.95			-.1705	-.1777	-.1763	-.1580	-.1777	-.1326	-.1699	-.1077	-.1666	-.0855	-.1657	-.1294

TAIL 2

TABLE IX. - CONCLUDED

(k) α = 19.90°

	Cp at y/b of													
	0.02		0.22		0.44		0.56		0.67		0.83		0.98	
x/c	U.S.	L.S.	U.S.	L.S.	U.S.	L.S.	U.S.	L.S.	U.S.	L.S.	U.S.	L.S.	U.S.	L.S.
.05	-.1821	.7102	-.1392		-.1198	1.2923	-.1394	1.3361		1.3972			-.1394	1.3754
.10	-.1918	.5939	-.1353	1.0567	-.1009	1.2036		1.2238	-.0793	1.2624	-.0920	1.3003	-.1103	1.1895
.15	-.1872	.7527	-.1406	1.0063	-.0985	1.1347			-.0808	1.1839			-.0622	1.0448
.20	-.1825	.7639	-.1466	.9483	-.1016	1.0491	-.0623	1.0491	-.0803	1.1216	-.0685	1.1490	-.0363	.9577
.25	-.1922	.3131			-.1050	.3680	-.0859	1.0055	-.0791	1.0527	-.0664	1.1027	-.0220	.8700
.30	-.1915	.3931							-.0813	.3733	-.0675	1.0209	-.0190	.8037
.40	-.1900	.6375	-.1910	.4367	-.1732	.4054	-.1615	.3783	-.1642	.3577	-.0743	.8525	-.0356	.6994
.50			-.1916	.5420	-.1906	.4625	-.1824	.4548			-.1563	.3501	-.0626	.5390
.60					-.1850	.5026	-.1635	.4489	-.1776	.4827	-.1729	.3729	-.2071	-.0295
.70	-.1663	.6124	-.1694	.6726	-.1749	.6285	-.1711	.4078	-.1705	.1691	-.1734	.1084	-.1990	-.0360
.80	-.1868	.3466	-.1826	.2413			-.1692	.2069	-.1698	.1407	-.1742	.0969	-.1900	-.0232
.90	-.1947	.2766	-.1837	.1875	-.1635	.2424	-.1693	.2281	-.1696	.1495	-.1760	.0892		
.95	-.1783	.2684	-.1830	.1933			-.1695	.2293	-.1697	.1576	-.1768	.0836		-.0240

TAIL 1

	Cp at y/b of													
	0.02		0.22		0.44		0.56		0.67		0.83		0.98	
x/c	U.S.	L.S.	U.S.	L.S.	U.S.	L.S.	U.S.	L.S.	U.S.	L.S.	U.S.	L.S.	U.S.	L.S.
.05	.1661	-.0800	.0680	-.0920			-.1430	.0442			-.1682	.2394	-.1592	.4896
.10	.1749	-.0963					-.1249	.0519	-.1647	.1397			-.1376	.4327
.15					-.0532	.0014	-.1069	.0500	-.1502	.1419			-.1351	.3927
.20	.1733	-.0864					-.0951	.0493	-.1363	.1377			-.1372	.3501
.25	-.0000	-.1459	-.0587	-.0855	-.0669	-.0120	-.0949	.0520	-.1287	.1320	-.1487	.1734	-.1373	.3128
.30			-.0869	-.1535			-.1040	.0421	-.1275	.1201	-.1562	.1645	-.1357	.2795
.40	-.0215	-.1307							-.1697	-.0251	-.1509	.1101	-.1310	.2224
.50					-.1225	-.0984	-.1404	-.0538	-.1677	-.0200	-.1762	.0055	-.1361	.1090
.60	-.0420	-.1164	-.0956	-.1398			-.1468	-.0532	-.1646	-.0153	-.1864	-.0241	-.2031	-.1116
.70					-.1225	-.0757	-.1748	-.1120	-.1939	-.1212	-.1978	-.1071	-.1918	-.1137
.80	-.1549	-.1717	-.1724	-.1848	-.1835	-.1621	-.1956	-.1517			-.1951	-.1140		
.90	-.1749	-.1943	-.1836	-.1955	-.1905	-.1741	-.1958	-.1603	-.1900	-.1399	-.1912	-.1180	-.1704	-.1069
.95			-.1854	-.1921	-.1859	-.1779	-.1892	-.1648	-.1892	-.1459	-.1901	-.1226	-.1779	-.1196

TAIL 2

ORIGINAL PAGE IS OF POOR QUALITY

REPRODUCIBILITY OF THE ORIGINAL PAGE IS POOR

TABLE X. - PRESSURE COEFFICIENTS, ϕ = 90°, δ = 0°, M = 2.36

(a) α = -4.05°

	Cp at y/b of													
	0.02		0.22		0.44		0.56		0.67		0.83		0.98	
x/c	U.S.	L.S.	U.S.	L.S.	U.S.	L.S.	U.S.	L.S.	U.S.	L.S.	U.S.	L.S.	U.S.	L.S.
.05	[illegible]	[illegible]	[illegible]		[illegible]	[illegible]	.3349	.2104		[illegible]			[illegible]	[illegible]
.10	[illegible]	[illegible]	.3732	[illegible]	[illegible]	.1685		.1953	[illegible]	[illegible]	[illegible]	[illegible]	[illegible]	[illegible]
.15	.1945	[illegible]	[illegible]	[illegible]	[illegible]	[illegible]			.3705	[illegible]			[illegible]	[illegible]
.20	.1915	[illegible]	.3207	[illegible]	.3784	[illegible]	.2380	.1870	.3772	[illegible]	[illegible]	[illegible]	[illegible]	[illegible]
.25	[illegible]	[illegible]			.3857	[illegible]	.3752	.1840	.3807	[illegible]	[illegible]	[illegible]	.2875	[illegible]
.30	.1350	-.0433							.3737	[illegible]	.3750	[illegible]	.2554	[illegible]
.40	.1092	-.0225	.0479	-.0752	.0842	-.0474	.0999	-.0329	[illegible]	[illegible]	.3715	[illegible]	[illegible]	[illegible]
.50			.0356	-.0824	.0632	-.0639	.0951	-.0529			.1030	-.0262	.2283	[illegible]
.60					.0615	-.0559	-.0534	-.0480	.0880	[illegible]	.0504	-.0572	[illegible]	[illegible]
.70	.0044	-.0240	.0577	-.0506	.0554	-.0743	.0461	-.0949	-.0705	[illegible]	-.0937	-.1535	-.1055	[illegible]
.80	-.0695	-.0800	-.0725	-.1379			-.1020	-.1377	-.1045	[illegible]	[illegible]	-.1331	[illegible]	[illegible]
.90	-.0456	-.0940	-.0999	-.1462	-.1191	-.1321	-.1119	-.1323	-.1060	[illegible]	-.1079	-.1301		
.95	-.0547	-.0963	-.1062	-.1292			-.1164	-.1313	-.1102	[illegible]	[illegible]	-.1295		[illegible]

TAIL 1

	Cp at y/b of													
	0.02		0.22		0.44		0.56		0.67		0.83		0.98	
x/c	U.S.	L.S.	U.S.	L.S.	U.S.	L.S.	U.S.	L.S.	U.S.	L.S.	U.S.	L.S.	U.S.	L.S.
.05	.1580	.1697	.2929	.2921			.2535	.2182			.2929	.2431	[illegible]	[illegible]
.10	.1541	[illegible]					.2906	.2874	.2952	.2733			.2352	[illegible]
.15					.2873	.2791	.2875	.2730	.2931	[illegible]			.2237	[illegible]
.20	.1323	.1406					.2858	.2709	.2944	.2707			[illegible]	[illegible]
.25	[illegible]	[illegible]	[illegible]	[illegible]	.2870	.2686	.2875	.2693	.2890	.2747	.2785	[illegible]	[illegible]	[illegible]
.30			.0048	[illegible]			.2839	.2525	.2851	[illegible]	[illegible]	[illegible]	[illegible]	[illegible]
.40	-.0033	[illegible]							[illegible]	[illegible]	[illegible]	.2422	[illegible]	[illegible]
.50					[illegible]	[illegible]	[illegible]	.0100	.0205	[illegible]	.0333	.0197	[illegible]	[illegible]
.60	[illegible]	[illegible]	[illegible]	-.0372			.0159	.0023	.0146	[illegible]	[illegible]	[illegible]	[illegible]	[illegible]
.70					[illegible]	-.0176	-.0685	-.0850	-.1249	-.1279	-.1302	-.1393	-.1427	[illegible]
.80	[illegible]	[illegible]	-.1316	[illegible]	-.1324	-.1389	-.1326	-.1383			[illegible]	-.1247		
.90	[illegible]	[illegible]	[illegible]	-.1312	-.1330	-.1298	-.1271	-.1246	[illegible]	[illegible]	[illegible]	[illegible]	[illegible]	[illegible]
.95			-.1221	-.1253	-.1205	-.1220	-.1146	-.1150	-.1123	-.1098	[illegible]	[illegible]	[illegible]	[illegible]

TAIL 2

TABLE X. - CONTINUED
(b) α = -2.05°

	Cp at y/b of													
	0.02		0.22		0.44		0.56		0.67		0.83		0.98	
x/c	U.S.	L.S.	U.S.	L.S.	U.S.	L.S.	U.S.	L.S.	U.S.	L.S.	U.S.	L.S.	U.S.	L.S.
.05	[illegible]	.0445	.3131		.2578	.2084	.2660	.2806		.1608			[illegible]	[illegible]
.10	.1577	.0912	.2977	.2171	.2984	.2334		.2559	.3066	[illegible]	[illegible]	.2549	[illegible]	[illegible]
.15	.1446	.0883	.2754	.2077	.3026	.2463			.2931	.2387			[illegible]	[illegible]
.20	[illegible]	.0790	.2536	.1872	.2992	.2269	.2960	.2156	.2959	.2456	[illegible]	[illegible]	[illegible]	[illegible]
.25	[illegible]	[illegible]			.2928	.2181	.2942	.2307	.2999	[illegible]	[illegible]	[illegible]	[illegible]	[illegible]
.30	[illegible]	-.0277							.2971	.2326	[illegible]	.2405	[illegible]	[illegible]
.40	.0627	-.0038	.0054	-.0461	.0443	-.0122	.0573	-.0033	.0641	.0159	[illegible]	.2307	[illegible]	[illegible]
.50			-.0018	-.0573	.0310	-.0264	.0449	-.0195			.0628	.0066	.1750	.1243
.60					.0247	-.0349	.0166	-.0340	.0436	-.0143	.0324	-.0257	-.1220	-.1351
.70	.0218	-.0070	.0230	-.0312	.0146	-.0422	.0114	-.0656	-.0986	-.1302	-.1096	-.1429	[illegible]	-.1303
.80	-.0776	-.0760	-.0977	-.1252			-.1223	-.1486	-.1225	-.1426	-.1234	-.1255	-.1294	-.1279
.90	-.0664	-.0893	-.1199	-.1402	-.1312	-.1295	-.1312	-.1279	-.1251	-.1209	-.1296	-.1171		
.95	-.0734	-.0948	-.1222	-.1274			-.1296	-.1239	-.1239	-.1165	-.1237	-.1157		-.1159

TAIL 1

	Cp at y/b of													
	0.02		0.22		0.44		0.56		0.67		0.83		0.98	
x/c	U.S.	L.S.	U.S.	L.S.	U.S.	L.S.	U.S.	L.S.	U.S.	L.S.	U.S.	L.S.	U.S.	L.S.
.05	.1462	.1549	.2858	.2756			.2573	.2145			.2840	.2395	.2057	.2083
.10	.1387	.1256					.2841	.2837	.2828	.2692			.2409	.2358
.15					.2824	.2729	.2797	.2693	.2884	.2645			.2234	.2125
.20	.1243	.1259					.2804	.2655	.2801	.2665			.2136	.1933
.25	-.0079	-.0021	.0622	.1853	.2807	.2626	.2931	.2634	.2827	.2693	.2746	.2618	.2049	.1754
.30			-.0003	-.0017			.2810	.2494	.2793	.2674	.2819	.2637	.1956	.1691
.40	.0026	-.0049							.0427	.0336	.2683	.2372	.1925	.1590
.50					.0101	-.0019	.0188	.0098	.0201	.0058	.0317	.0192	.1558	.1057
.60	.0666	.0253	-.0290	-.0389			.0135	.0009	.0130	.0006	-.0212	-.0458	-.1227	-.1239
.70					-.0058	-.0214	-.0665	-.0840	-.1264	-.1259	-.1300	-.1383	-.1406	-.1496
.80	-.0814	-.0770	-.1278	-.1377	-.1349	-.1405	-.1354	-.1403			-.1371	-.1241		
.90	-.0778	-.1059	-.1311	-.1311	-.1361	-.1307	-.1296	-.1264	-.1174	-.1134	-.1154	-.1124	-.0984	-.1016
.95			-.1256	-.1248	-.1231	-.1225	-.1176	-.1168	-.1128	-.1103	-.1115	-.1106	-.1054	-.1210

TAIL 2

TABLE X. - CONTINUED
(c) α = -0.04°

	Cp at y/b of													
	0.02		0.22		0.44		0.56		0.67		0.83		0.98	
x/c	U.S.	L.S.	U.S.	L.S.	U.S.	L.S.	U.S.	L.S.	U.S.	L.S.	U.S.	L.S.	U.S.	L.S.
.05	.0660	.1001	.2374		.1984	.2820	.2063	.3557		.2222			.2520	.2362
.10	.1052	.1285	.2185	.3094	.2230	.3213		.3241	.2384	.3087	.2307	.3228	.2431	.3132
.15	.1021	.1274	.2047	.2918	.2267	.3157			.2256	.3177			.1924	.2877
.20	.0999	.1168	.1921	.2600	.2248	.2997	.2190	.2993	.2267	.3171	.2327	.3132	.1863	.2570
.25	-.0159	-.0242			.2201	.2923	.2242	.3029	.2301	.3096	.2307	.3143	.1681	.2343
.30	-.0013	-.0077							.2265	.3045	.2311	.3105	.1631	.2173
.40	.0217	.0246	-.0271	-.0133	.0055	.0245	.0150	.0346	.0215	.0563	.2228	.3019	.1452	.1976
.50			-.0356	-.0272	-.0062	.0087	.0029	.0190			.0240	.0456	.1293	.1654
.60					-.0119	.0006	.0004	-.0040	.0011	.0229	-.0093	.0077	-.1300	-.1280
.70	-.0037	.0256	-.0131	-.0070	-.0218	-.0050	-.0257	-.0325	-.1222	-.1081	-.1315	-.1223	-.1457	-.1359
.80	-.0835	-.0676	-.1194	-.1090			-.1409	-.1342	-.1411	-.1351	-.1314	-.1352	-.1289	-.1411
.90	-.0808	-.0760	-.1344	-.1267	-.1205	-.1391	-.1246	-.1350	-.1175	-.1259	-.1124	-.1174		
.95	-.0843	-.0817	-.1244	-.1263			-.1163	-.1216	-.1117	-.1139	-.1094	-.1091		-.1009

TAIL 1

	Cp at y/b of													
	0.02		0.22		0.44		0.56		0.67		0.83		0.98	
x/c	U.S.	L.S.	U.S.	L.S.	U.S.	L.S.	U.S.	L.S.	U.S.	L.S.	U.S.	L.S.	U.S.	L.S.
.05	.1249	.1355	.2796	.2723			.2539	.2111			.2813	.2334	.2098	.2108
.10	.1164	.1112					.2766	.2802	.2798	.2645			.2487	.2365
.15					.2795	.2586	.2754	.2644	.2834	.2608			.2229	.2101
.20	.1094	.1100					.2782	.2588	.2746	.2628			.2130	.1990
.25	-.0050	-.0014	.0637	.1791	.2721	.2556	.2790	.2586	.2774	.2651	.2701	.2603	.2027	.1724
.30			-.0048	-.0061			.2743	.2429	.2737	.2637	.2777	.2611	.1969	.1634
.40	.0158	.0123							.0401	.0348	.2677	.2351	.1905	.1541
.50					.0071	-.0053	.0176	.0086	.0182	.0051	.0293	.0142	.1519	.1001
.60	.0747	.0437	-.0300	-.0425			.0109	-.0016	.0115	-.0002	-.0211	-.0465	-.1281	-.1279
.70					-.0091	-.0217	-.0699	-.0879	-.1278	-.1276	-.1297	-.1373	-.1394	-.1443
.80	-.0775	-.0738	-.1165	-.1287	-.1369	-.1428	-.1377	-.1416			-.1387	-.1237		
.90	-.0770	-.1033	-.1256	-.1312	-.1366	-.1299	-.1313	-.1272	-.1193	-.1146	-.1171	-.1114	-.1094	-.0933
.95			-.1276	-.1249	-.1236	-.1218	-.1199	-.1185	-.1142	-.1120	-.1121	-.1096	-.1013	-.1040

TAIL 2

TABLE X. - CONTINUED

(d) α = 1.95°

	Cp at y/b of													
	0.02		0.22		0.44		0.56		0.67		0.83		0.98	
x/c	U.S.	L.S.	U.S.	L.S.	U.S.	L.S.	U.S.	L.S.	U.S.	L.S.	U.S.	L.S.	U.S.	L.S.
.05	[illegible]	[illegible]	.1651		.1379	.2710	.1515	.4370		.2919			[illegible]	[illegible]
[illegible]	[illegible]	[illegible]	.1493	.3964	[illegible]	.4074		.4060	[illegible]	.3912	[illegible]	[illegible]	[illegible]	[illegible]
[illegible]	[illegible]	[illegible]	[illegible]	[illegible]	[illegible]	.3921			[illegible]	[illegible]			[illegible]	[illegible]
[illegible]	[illegible]	[illegible]	[illegible]	.3293	[illegible]	.3797	.1813	.3614	[illegible]	.3944	[illegible]	[illegible]	[illegible]	[illegible]
[illegible]	[illegible]	[illegible]			.1345	.3688	.1617	.3805	[illegible]	.3877	[illegible]	[illegible]	[illegible]	[illegible]
[illegible]	[illegible]	[illegible]							[illegible]	.3825	.1717	[illegible]	[illegible]	[illegible]
[illegible]	[illegible]	[illegible]	[illegible]	[illegible]	[illegible]	[illegible]	-.0225	.0724	[illegible]	.1018	[illegible]	[illegible]	[illegible]	[illegible]
[illegible]			[illegible]	.0055	[illegible]	.0438	-.0347	[illegible]			[illegible]	[illegible]	[illegible]	[illegible]
.60					-.0471	.0372	[illegible]	.0282	[illegible]	[illegible]	[illegible]	[illegible]	[illegible]	[illegible]
.70	[illegible]	[illegible]	-.0375	.0271	[illegible]	[illegible]	-.0597	[illegible]	[illegible]	[illegible]	[illegible]	[illegible]	[illegible]	[illegible]
.80	[illegible]	[illegible]	-.1364	-.0886			-.1249	[illegible]	[illegible]	-.1166	-.1252	[illegible]	[illegible]	[illegible]
.90	[illegible]	[illegible]	-.1314	-.1095	-.1177	-.1311	-.1198	-.1263	[illegible]	-.1213	-.1212	[illegible]		
.95	-.0852	-.0634	-.1214	[illegible]			-.1197	-.1299	[illegible]	-.1235	[illegible]	-.1252		[illegible]

TAIL 1

	Cp at y/b of													
	0.02		0.22		0.44		0.56		0.67		0.83		0.98	
x/c	U.S.	L.S.	U.S.	L.S.	U.S.	L.S.	U.S.	L.S.	U.S.	L.S.	U.S.	L.S.	U.S.	L.S.
.05	.1077	.1279	.2803	.2721			.2505	.2272			.2733	.2285	.2118	.2031
.10	.1018	.1036					.2704	.2756	.2775	.2517			.2542	.2332
.15					.2777	.2547	.2682	.2622	.2801	.2606			.2237	.2111
.20	.0925	.1005					.2720	.2552	.2706	.2591			.2133	.1893
.25	-.0063	-.0001	.0528	.1757	.2732	.2514	.2745	.2549	.2738	.2599	.2674	.2577	.2061	.1705
.30			-.0112	-.0103			.2714	.2370	.2711	.2583	.2753	.2575	.1972	.1648
.40	.0240	.0179							.0404	.0323	.2627	.2353	.1874	.1535
.50					.0053	-.0059	.0166	.0061	.0182	.0048	.0279	.0050	.1436	.0956
.60	.0551	.0423	-.0317	-.0438			.0091	-.0050	.0116	-.0008	-.0201	-.0453	-.1318	-.1324
.70					-.0117	-.0224	-.0741	-.0922	-.1279	-.1294	-.1288	-.1357	-.1370	-.1336
.80	-.0830	-.0790	-.1117	-.1255	-.1366	-.1448	-.1395	-.1424			-.1381	-.1271		
.90	-.0820	-.1066	-.1283	-.1352	-.1364	-.1316	-.1337	-.1311	-.1203	-.1177	-.1179	-.1126	-.1098	-.1042
.95			-.1327	-.1289	-.1254	-.1242	-.1221	-.1211	-.1163	-.1142	-.1121	-.1109	-.1129	-.1070

TAIL 2

TABLE X. - CONTINUED

(e) α = 3.95°

	Cp at y/b of													
	0.02		0.22		0.44		0.56		0.67		0.83		0.98	
x/c	U.S.	L.S.	U.S.	L.S.	U.S.	L.S.	U.S.	L.S.	U.S.	L.S.	U.S.	L.S.	U.S.	L.S.
.05	.0254	.2069	.0978		.0943	.4813	.0994	.5336		.3580			.1457	.3999
.10	.0229	.1985	.0906	.4690	.1001	.4998		.5003	.1214	.5097	.1262	.4724	.1411	.4765
.15	.0257	.2217	.0771	.4307	.1002	.4782			.1116	.4960			.0936	.4247
.20	.0173	.2115	.0635	.3989	.0995	.4619	.1308	.4388	.1108	.4853	.1205	.4883	.0881	.4054
.25	-.0505	.0117			.0964	.4424	.1055	.4619	.1131	.4743	.1170	.4917	.0836	.3697
.30	-.0420	.0399							.1112	.4655	.1162	.4848	.0809	.3469
.40	-.0299	.1020	-.0881	.0565	-.0623	.0962	-.0558	.1107	-.0476	.1464	.1095	.4552	.0801	.3259
.50			-.0805	.0444	-.0746	.0804	-.0685	.0958			-.0437	.1320	.0696	.2758
.60					-.0791	.0757	-.0400	.0611	-.0692	.1014	-.0730	.0912	-.1414	-.1107
.70	-.0260	.1142	-.0619	.0741	-.0867	.0581	-.0907	.0317	-.1487	-.0699	-.1348	-.0781	-.1387	-.1086
.80	-.0907	-.0391	-.1474	-.0638			-.1246	-.0944	-.1284	-.0981	-.1293	-.0948	-.1207	-.1054
.90	-.0928	-.0396	-.1438	-.0868	-.1249	-.1125	-.1249	-.1071	-.1254	-.1022	-.1284	-.1036		
.95	-.0876	-.0404	-.1278	-.0904			-.1253	-.1114	-.1251	-.1062	-.1280	-.1087		-.1073

TAIL 1

	Cp at y/b of													
	0.02		0.22		0.44		0.56		0.67		0.83		0.98	
x/c	U.S.	L.S.	U.S.	L.S.	U.S.	L.S.	U.S.	L.S.	U.S.	L.S.	U.S.	L.S.	U.S.	L.S.
.05	.1148	.1541	.2780	.2641			.2516	.2029			.2768	.2243	.2159	.1973
.10	.1095	.1235					.2687	.2711	.2778	.2595			.2538	.2297
.15					.2759	.2600	.2689	.2599	.2788	.2595			.2265	.2135
.20	.0886	.1165					.2722	.2527	.2683	.2557			.2162	.1919
.25	-.0221	-.0076	.0616	.1854	.2684	.2462	.2726	.2496	.2701	.2555	.2570	.2567	.2069	.1734
.30			-.0044	-.0029			.2677	.2318	.2674	.2533	.2721	.2559	.2009	.1672
.40	-.0045	.0007							.0370	.0346	.2607	.2365	.1907	.1517
.50					.0089	-.0049	.0163	.0040	.0172	.0051	.0294	.0020	.1515	.0936
.60	.0671	.0220	-.0402	-.0440			.0095	-.0059	.0112	-.0027	-.0197	-.0457	-.1330	-.1359
.70					-.0074	-.0165	-.0675	-.0883	-.1265	-.1295	-.1281	-.1347	-.1347	-.1360
.80	-.1068	-.0874	-.1222	-.1375	-.1375	-.1421	-.1373	-.1408			-.1382	-.1294		
.90	-.0995	-.1178	-.1281	-.1362	-.1377	-.1357	-.1339	-.1306	-.1185	-.1159	-.1178	-.1145	-.1098	-.1029
.95			-.1281	-.1289	-.1256	-.1259	-.1214	-.1207	-.1153	-.1130	-.1123	-.1118	-.1166	-.1133

TAIL 2

TABLE X. - CONTINUED

(l) α = 5.95°

	Cp at y/b of													
	0.02		0.22		0.44		0.56		0.67		0.83		0.98	
x/c	U.S.	L.S.	U.S.	L.S.	U.S.	L.S.	U.S.	L.S.	U.S.	L.S.	U.S.	L.S.	U.S.	L.S.
.05	-.0097	.2938	.0388		.0355	.6185	.0519	.6633		.4741			.0923	.5077
.10	-.0135	.2257	.0361	.5450	.0482	.5989		.6189	.0721	.6298	.0788	.5907	.0964	.5898
.15	-.0082	.2630	.0234	.4962	.0477	.5675			.0606	.5987			.0537	.5442
.20	-.0144	.2609	.0157	.4613	.0450	.5382	.0781	.5330	.0538	.5793	.0729	.6090	.0523	.5150
.25	-.0709	.0327			.0427	.5092	.0539	.5355	.0617	.5597	.0689	.5961	.0561	.4745
.30	-.0629	.0679							.0602	.5410	.0660	.5737	.0585	.4433
.40	-.0548	.1467	-.1059	.0934	-.0932	.1273	-.0856	.1421	-.0767	.1663	.0507	.5237	.0581	.4014
.50			-.0991	.0847	-.1049	.1181	-.0994	.1309			-.0742	.1689	.0503	.3226
.60					-.1082	.1119	-.0699	.1093	-.0979	.1379	-.1006	.1260	-.1403	-.1005
.70	-.0322	.1654	-.0887	.1280	-.1145	.1053	-.1174	.0664	-.1330	-.0475	-.1302	-.0582	-.1317	-.1089
.80	-.0939	-.0197	-.1608	-.0368			-.1292	-.0727	-.1293	-.0756	-.1297	-.0750	-.1383	-.1087
.90	-.1019	-.0155	-.1531	-.0628	-.1356	-.0894	-.1300	-.0857	-.1278	-.0797	-.1301	-.0844		
.95	-.1109	-.0134	-.1327	-.0653			-.1303	-.0899	-.1276	-.0837	-.1300	-.0903		-.1008

TAIL 1

	Cp at y/b of													
	0.02		0.22		0.44		0.56		0.67		0.83		0.98	
x/c	U.S.	L.S.	U.S.	L.S.	U.S.	L.S.	U.S.	L.S.	U.S.	L.S.	U.S.	L.S.	U.S.	L.S.
.05	.1213	.1689	.2772	.2626			.2575	.2008			.2797	.2191	.2218	.1930
.10	.1255	.1399					.2710	.2589	.2903	.2586			.2652	.2289
.15					.2773	.2575	.2694	.2577	.2793	.2589			.2380	.2134
.20	.0866	.1288					.2710	.2500	.2681	.2526			.2221	.1973
.25	-.0397	-.0134	.0659	.1925	.2707	.2444	.2742	.2461	.2699	.2521	.2716	.2553	.2144	.1773
.30			-.0050	.0030			.2701	.2262	.2675	.2481	.2749	.2551	.2040	.1760
.40	-.0435	-.0259							.0367	.0301	.2559	.2314	.1953	.1487
.50					.0191	.0009	.0208	.0055	.0171	.0052	.0307	-.0002	.1549	.0895
.60	.0358	-.0087	-.0315	-.0529			.0183	-.0028	.0115	-.0033	-.0214	-.0477	-.1361	-.1394
.70					-.0027	-.0095	-.0652	-.0856	-.1219	-.1293	-.1286	-.1342	-.1327	-.1328
.80	-.0956	-.0928	-.1415	-.1532	-.1369	-.1356	-.1353	-.1363			-.1373	-.1288		
.90	-.1043	-.1201	-.1305	-.1357	-.1405	-.1464	-.1361	-.1330	-.1177	-.1144	-.1158	-.1146	-.1090	-.1037
.95			-.1254	-.1324	-.1294	-.1324	-.1225	-.1216	-.1124	-.1118	-.1107	-.1126	-.1155	-.1159

TAIL 2

TABLE X. - CONTINUED

(g) α = 7.95°

	Cp at y/b of													
	0.02		0.22		0.44		0.56		0.67		0.83		0.98	
x/c	U.S.	L.S.	U.S.	L.S.	U.S.	L.S.	U.S.	L.S.	U.S.	L.S.	U.S.	L.S.	U.S.	L.S.
.05	-.0393	.3209	-.0124		-.0065	.7400	.0077	.8063		.7213			.0359	.7657
.10	-.0444	.2448	-.0142	.6102	.0023	.6855		.7135	.0284	.7365	.0354	.7472	.0553	.7393
.15	-.0364	.3067	-.0243	.5546	.0008	.6409			.0150	.6860			.0243	.6632
.20	-.0395	.3029	-.0303	.5201	-.0031	.6006	.0378	.5898	.0142	.6586	.0292	.6997	.0296	.6071
.25	-.0847	.0533			-.0055	.5680	.0057	.6026	.0155	.6331	.0249	.6803	.0363	.5486
.30	-.0773	.0968							.0141	.6063	.0203	.6472	.0412	.5030
.40	-.0867	.1894	-.1237	.1323	-.1186	.1578	-.1109	.1688	-.1048	.1911	.0148	.5751	.0395	.4470
.50			-.1209	.1260	-.1316	.1551	-.1257	.1665			-.1008	.1951	.0336	.3511
.60					-.1332	.1513	-.0936	.1409	-.1232	.1751	-.1239	.1540	-.1467	-.0929
.70	-.0440	.2197	-.1141	.1859	-.1371	.1471	-.1397	.1052	-.1346	-.0238	-.1344	-.0381	-.1369	-.1137
.80	-.1015	.0074	-.1758	-.0053			-.1380	-.0504	-.1343	-.0521	-.1342	-.0551	-.1547	-.1171
.90	-.1110	.0155	-.1565	-.0331	-.1442	-.0652	-.1393	-.0615	-.1343	-.0546	-.1346	-.0636		
.95	-.1288	.0163	-.1349	-.0349			-.1400	-.0660	-.1341	-.0590	-.1346	-.0694		-.1211

TAIL 1

	Cp at y/b of													
	0.02		0.22		0.44		0.56		0.67		0.83		0.98	
x/c	U.S.	L.S.	U.S.	L.S.	U.S.	L.S.	U.S.	L.S.	U.S.	L.S.	U.S.	L.S.	U.S.	L.S.
.05	.1116	.1636	.2613	.2499			.2627	.1996			.2823	.2146	.2285	.1938
.10	.1149	.1328					.2752	.2675	.2864	.2583			.2716	.2328
.15					.2800	.2571	.2734	.2578	.2847	.2598			.2481	.2191
.20	.0805	.1223					.2756	.2487	.2716	.2520			.2262	.1993
.25	-.0494	-.0206	.0688	.1949	.2770	.2463	.2753	.2455	.2725	.2517	.2705	.2549	.2178	.1843
.30			-.0077	-.0004			.2699	.2257	.2687	.2480	.2737	.2537	.2070	.1727
.40	-.0635	-.0412							.0343	.0295	.2520	.2260	.1969	.1514
.50					.0410	.0085	.0227	.0060	.0156	.0049	.0279	.0003	.1565	.0932
.60	-.0214	-.0371	-.0777	-.0624			.0337	.0014	.0104	-.0044	-.0221	-.0475	-.1378	-.1411
.70					.0069	.0075	-.0565	-.0820	-.1197	-.1287	-.1299	-.1335	-.1326	-.1280
.80	-.1126	-.1176	-.1534	-.1593	-.1355	-.1349	-.1272	-.1266			-.1356	-.1283		
.90	-.1134	-.1391	-.1406	-.1434	-.1534	-.1510	-.1400	-.1327	-.1247	-.1146	-.1146	-.1143	-.1074	-.1042
.95			-.1401	-.1430	-.1398	-.1447	-.1252	-.1234	-.1164	-.1108	-.1103	-.1123	-.1144	-.1143

TAIL 2

TABLE X. - CONTINUED

(h) α = 9.95°

	Cp at y/b of													
	0.02		0.22		0.44		0.56		0.67		0.83		0.98	
x/c	U.S.	L.S.	U.S.	L.S.	U.S.	L.S.	U.S.	L.S.	U.S.	L.S.	U.S.	L.S.	U.S.	L.S.
.05	-.0713	.3432	-.0571		-.0484	.8227	-.0369	.8915		.8595			-.0229	.9356
.10	-.0655	.2559	-.0592	.6564	-.0497	.7555		.7911	-.0132	.8249	-.0081	.8535	.0127	.8409
.15	-.0545	.3287	-.0670	.6235	-.0424	.7015			-.0274	.7616			-.0016	.7422
.20	-.0592	.3327	-.0720	.5716	-.0424	.6581	-.0030	.6578	-.0283	.7293	-.0116	.7735	.0059	.6752
.25	-.0933	.0707			-.0496	.6222	-.0360	.6634	-.0273	.6986	-.0159	.7494	.0142	.6095
.30	-.0862	.1240							-.0290	.6635	-.0215	.7050	.0165	.5527
.40	-.1172	.2319	-.1410	.1718	-.1414	.1891	-.1340	.1940	-.1307	.2104	-.0278	.6133	.0129	.4667
.50			-.1409	.1557	-.154	.1932	-.1496	.2043			-.1261	.2132	.0082	.3733
.60					-.1525	.1943	-.1180	.1820	-.1463	.2157	-.1451	.1804	-.1533	-.0830
.70	-.0810	.2777	-.1413	.2412	-.1533	.1343	-.1526	.1455	-.1419	.0019	-.1435	-.0168	-.1450	-.1064
.80	-.1182	.0365	-.1867	.0309			-.1487	-.0241	-.1429	-.0252	-.1434	-.0325	-.1545	-.1095
.90	-.1251	.0401	-.1601	-.0019	-.1525	-.0337	-.1501	-.0340	-.1433	-.0287	-.1439	-.0412		
.95	-.1464	.0477	-.1462	-.0061			-.1507	-.0382	-.1431	-.0332	-.1440	-.0473		-.1174

TAIL 1

	Cp at y/b of													
	0.02		0.22		0.44		0.56		0.67		0.83		0.98	
x/c	U.S.	L.S.	U.S.	L.S.	U.S.	L.S.	U.S.	L.S.	U.S.	L.S.	U.S.	L.S.	U.S.	L.S.
.05	.0956	.1420	.2119	.2130			.2694	.2009			.2864	.2143	.2304	.1913
.10	.1029	.1136					.2827	.2586	.2944	.2595			.2754	.2330
.15					.2844	.2539	.2801	.2541	.2908	.2591			.2520	.2207
.20	.0761	.1059					.2804	.2477	.2761	.2515			.2313	.2011
.25	-.0512	-.0271	.0323	.1582	.2809	.2485	.2783	.2470	.2755	.2498	.2711	.2544	.2199	.1847
.30			-.0421	-.0232			.2779	.2297	.2717	.2441	.2740	.2517	.2094	.1766
.40	-.0651	-.0462							.0383	.0294	.2496	.2225	.1933	.1536
.50					.0403	.0046	.0286	.0083	.0197	.0052	.0262	-.0006	.1580	.0909
.60	-.0414	-.0444	-.1005	-.0782			.0479	.0052	.0161	-.0032	-.0236	-.0487	-.1378	-.1389
.70					.0030	.0150	-.0370	-.0637	-.1146	-.1284	-.1300	-.1336	-.1300	-.1171
.80	-.1446	-.1348	-.1695	-.1738	-.1388	-.1359	-.1231	-.1184			-.1313	-.1225		
.90	-.1570	-.1643	-.1622	-.1621	-.1584	-.1533	-.1397	-.1302	-.1226	-.1114	-.1113	-.1121	-.1067	-.0996
.95			-.1624	-.1626	-.1497	-.1497	-.1277	-.1285	-.1147	-.1080	-.1076	-.1095	-.1117	-.1102

TAIL 2

TABLE X. - CONTINUED

(i) α = 11.94°

	Cp at y/b of													
	0.02		0.22		0.44		0.56		0.67		0.83		0.98	
x/c	U.S.	L.S.	U.S.	L.S.	U.S.	L.S.	U.S.	L.S.	U.S.	L.S.	U.S.	L.S.	U.S.	L.S.
.05	-.0887	.3329	-.0940		-.0847	.8881	-.0809	.8541		1.0029			-.0890	1.0533
.10	-.0780	.2423	-.0967	.6977	-.0768	.8171		.8529	-.0494	.8952	-.0491	.8393	-.0478	.8054
.15	-.0634	.3251	-.1026	.6570	-.0780	.7615			-.0622	.8314			-.0347	.8104
.20	-.0762	.3374	-.1061	.6192	-.0825	.7162	-.0318	.7274	-.0601	.7912	-.0475	.8358	-.0214	.7329
.25	-.1044	.0793			-.0852	.6722	-.0717	.7143	-.0625	.7533	-.0506	.7932	-.0159	.6583
.30	-.0993	.1459							-.0643	.7065	-.0553	.7463	-.0131	.6031
.40	-.1395	.2976	-.1550	.2154	-.1578	.2226	-.1525	.2173	-.1514	.2295	-.0639	.6381	-.0145	.5213
.50			-.1582	.2093	-.1679	.2458	-.1684	.2429			-.1476	.2237	-.0172	.3908
.60					-.1618	.2448	-.1353	.2300	-.1631	.2581	-.1561	.2077	-.1700	-.0796
.70	-.0742	.3344	-.1375	.3011	-.1600	.2470	-.1563	.1843	-.1500	.0291	-.1508	.0047	-.1604	-.0966
.80	-.1290	.0649	-.1828	.0573			-.1570	.0076	-.1498	.0016	-.1506	-.0090	-.1654	-.0955
.90	-.1322	.0616	-.1671	.0254	-.1515	.0110	-.1585	-.0043	-.1503	-.0018	-.1508	-.0166		
.95	-.1562	.0798	-.1608	.0185			-.1588	-.0081	-.1501	-.0063	-.1507	-.0225		-.1020

TAIL 1

	Cp at y/b of													
	0.02		0.22		0.44		0.56		0.67		0.83		0.98	
x/c	U.S.	L.S.	U.S.	L.S.	U.S.	L.S.	U.S.	L.S.	U.S.	L.S.	U.S.	L.S.	U.S.	L.S.
.05	.0870	.1286	.1459	.1743			.2638	.1946			.2936	.2165	.2349	.1907
.10	.0930	.1013					.2892	.2583	.2986	.2560			.2825	.2352
.15					.2343	.2152	.2850	.2460	.2992	.2556			.2599	.2229
.20	.0663	.0969					.2815	.2422	.2883	.2523			.2373	.2034
.25	-.0593	-.0352	-.0102	.1088	.2253	.2073	.2759	.2433	.2894	.2519	.2784	.2533	.2255	.1860
.30			-.0747	-.0511			.2721	.2313	.2850	.2514	.2816	.2511	.2144	.1775
.40	-.0709	-.0503							.0492	.0310	.2611	.2262	.2040	.1547
.50					-.0118	-.0331	.0161	-.0003	.0271	.0064	.0327	.0003	.1611	.0916
.60	-.0520	-.0508	-.1021	-.0966			.0373	-.0094	.0225	-.0019	-.0171	-.0491	-.1370	-.1308
.70					-.0183	-.0034	-.0319	-.0822	-.1133	-.1303	-.1267	-.1327	-.1276	-.1113
.80	-.1483	-.1363	-.1813	-.1775	-.1534	-.1373	-.1228	-.1158			-.1321	-.1187		
.90	-.1680	-.1666	-.1811	-.1798	-.1739	-.1596	-.1437	-.1257	-.1185	-.1076	-.1102	-.1099	-.1011	-.0951
.95			-.1786	-.1760	-.1687	-.1653	-.1394	-.1315	-.1109	-.1043	-.1054	-.1060	-.1103	-.1029

TAIL 2

TABLE X. - CONTINUED
(j) α = 15.95°

Cp at y/b of

	0.02		0.22		0.44		0.56		0.67		0.83		0.98	
x/c	U.S.	L.S.	U.S.	L.S.	U.S.	L.S.	U.S.	L.S.	U.S.	L.S.	U.S.	L.S.	U.S.	L.S.
.05	-.0975	.2367	-.1544		-.1501	.9770	-.1627	1.0448		1.0556			-.1756	1.1321
.10	-.1000	.1281	-.1535	.7730	-.1413	.9011		.9384	-.1238	.9764	-.1322	1.0156	-.1530	.9955
.15	-.0968	.1941	-.1536	.7225	-.1391	.8457			-.1289	.9102			-.1292	.8928
.20	-.0975	.2044	-.1508	.6880	-.1414	.7886	-.0768	.7957	-.1276	.8605	-.1211	.9019	-.1092	.8123
.25	-.1243	.0432			-.1435	.7305	-.1294	.7681	-.1265	.8098	-.1190	.8626	-.0993	.7346
.30	-.1208	.1464							-.1277	.7468	-.1173	.8030	-.0960	.6712
.40	-.1622	.4033	-.1732	.2985	-.1772	.2807	-.1763	.2661	-.1849	.2539	-.1212	.6684	-.0918	.5707
.50			-.1718	.3175	-.1820	.3395	-.1846	.3286			-.1771	.2690	-.1040	.4223
.60					-.1801	.3567	-.1507	.3170	-.1723	.3575	-.1649	.2862	-.1769	-.0609
.70	-.1022	.3070	-.1535	.4392	-.1808	.3858	-.1763	.2803	-.1714	.0997	-.1636	.0670	-.1771	-.0625
.80	-.1556	.1328	-.1561	.1153			-.1798	.0811	-.1704	.0717	-.1651	.0577	-.1771	-.0509
.90	-.1535	.1399	-.1858	.0575	-.1697	.1071	-.1755	.0903	-.1725	.0683	-.1664	.0515		
.95	-.1711	.1455	-.1821	.0625			-.1694	.0904	-.1712	.0665	-.1664	.0457		-.0580

TAIL 1

Cp at y/b of

	0.02		0.22		0.44		0.56		0.67		0.83		0.98	
x/c	U.S.	L.S.	U.S.	L.S.	U.S.	L.S.	U.S.	L.S.	U.S.	L.S.	U.S.	L.S.	U.S.	L.S.
.05	.0527	.0992	.0815	.0889			.1226	.0961			.3203	.2332	.2577	.2015
.10	.0542	.0732					.1369	.1279	.2414	.2030			.3021	.2417
.15					.0385	.0429	.1261	.1209	.2404	.2024			.2739	.2267
.20	.0229	.0630					.1154	.1146	.2235	.2023			.2511	.2060
.25	-.0871	-.0592	-.0441	.0561	.0216	.0264	.1073	.1088	.2197	.2030	.3024	.2623	.2393	.1891
.30			-.1013	-.0770			.0989	.0945	.2153	.2013	.3077	.2617	.2270	.1766
.40	-.0974	-.0704							-.0140	-.0209	.2948	.2404	.2162	.1578
.50					-.1275	-.1290	-.0953	-.0915	-.0416	-.0454	.0446	.0218	.1766	.0981
.60	-.0765	-.0750	-.1376	-.1250			-.1075	-.1079	-.0527	-.0542	-.0044	-.0391	-.1319	-.1404
.70					-.1298	-.1380	-.1506	-.1585	-.1535	-.1557	-.1204	-.1333	-.1279	-.1336
.80	-.1569	-.1467	-.1940	-.1883	-.1842	-.1865	-.1826	-.1885			-.1356	-.1389		
.90	-.1747	-.1754	-.1930	-.1929	-.1871	-.1817	-.1768	-.1802	-.1603	-.1626	-.1354	-.1178	-.1123	-.1021
.95			-.1904	-.1896	-.1835	-.1800	-.1727	-.1737	-.1545	-.1575	-.1230	-.1133	-.1185	-.1159

TAIL 2

TABLE X. - CONCLUDED
(k) α = 19.95°

	Cp at y/b of													
	0.02		0.22		0.44		0.56		0.67		0.83		0.98	
x/c	U.S.	L.S.	U.S.	L.S.	U.S.	L.S.	U.S.	L.S.	U.S.	L.S.	U.S.	L.S.	U.S.	L.S.
.05	-.1212	.2171	-.1980		-.1877	1.0684	-.1977	1.1264		1.1348			-.1967	1.2150
.10	-.1461	.1660	-.1922	.8731	-.1828	1.0049		1.0373	-.1635	1.0723	-.1649	1.1120	-.1840	1.0912
.15	-.1339	.2359	-.1887	.8372	-.1795	.9462			-.1689	1.0056			-.1653	.9891
.20	-.1299	.2665	-.1844	.7916	-.1803	.8763	-.1164	.8926	-.1657	.9549	-.1570	.9968	-.1501	.9101
.25	-.1504	.0846			-.1818	.8092	-.1673	.8479	-.1637	.8974	-.1539	.9556	-.1380	.8253
.30	-.1453	.2095							-.1638	.8238	-.1515	.8853	-.1325	.7582
.40	-.1826	.5733	-.1877	.4235	-.1787	.4081	-.1822	.3612	-.1995	.3127	-.1539	.7368	-.1326	.6476
.50			-.1887	.5213	-.1919	.4874	-.1919	.4810			-.1862	.3488	-.1408	.4801
.60					-.1916	.5413	-.1635	.5085	-.1842	.5197	-.1770	.4055	-.1892	-.0326
.70	-.1305	.3673	-.1733	.5428	-.1906	.5531	-.1894	.4187	-.1842	.1904	-.1766	.1531	-.1887	-.0134
.80	-.1744	.1873	-.2064	.1513			-.1915	.1861	-.1827	.1702	-.1778	.1447	-.1883	.0131
.90	-.1841	.2514	-.1976	.1239	-.1828	.1668	-.1908	.1743	-.1837	.1709	-.1784	.1351		
.95	-.1802	.2285	-.1949	.1257			-.1885	.1687	-.1825	.1699	-.1784	.1307		.0049

TAIL 1

	Cp at y/b of													
	0.02		0.22		0.44		0.56		0.67		0.83		0.98	
x/c	U.S.	L.S.	U.S.	L.S.	U.S.	L.S.	U.S.	L.S.	U.S.	L.S.	U.S.	L.S.	U.S.	L.S.
.05	.0172	.0766	.0057	.0267			.0017	-.0051			.1072	.0723	.1967	.1286
.10	.0107	.0468					.0091	.0143	.0275	.0232			.2197	.1719
.15					-.0142	.0026	.0035	.0131	.0284	.0292			.2016	.1633
.20	-.0207	.0284					-.0030	.0119	.0200	.0293			.1876	.1489
.25	-.1170	-.0843	-.0852	.0071	-.0311	-.0113	-.0082	.0099	.0163	.0253	.0786	.0802	.1736	.1331
.30			-.1360	-.1088			-.0158	-.0041	.0107	.0189	.0632	.0721	.1589	.1257
.40	-.1331	-.0959							-.1186	-.1093	.0508	.0475	.1453	.1128
.50					-.1503	-.1431	-.1422	-.1339	-.1376	-.1311	-.1050	-.1037	.1019	.0735
.60	-.1052	-.0958	-.1624	-.1466			-.1539	-.1488	-.1429	-.1380	-.1441	-.1455	-.1512	-.1431
.70					-.1487	-.1464	-.1821	-.1821	-.1951	-.1872	-.1954	-.1910	-.1667	-.1443
.80	-.1676	-.1562	-.2036	-.1989	-.1990	-.1964	-.2025	-.2015			-.2015	-.1953		
.90	-.1869	-.1851	-.2002	-.1994	-.1982	-.1937	-.1968	-.1944	-.1907	-.1864	-.1965	-.1903	-.1754	-.1739
.95			-.1998	-.1972	-.1953	-.1916	-.1938	-.1916	-.1920	-.1882	-.1943	-.1899	-.1948	-.1979

TAIL 2

TABLE XI. - PRESSURE COEFFICIENTS, δ = 0°, ε = 0°, M = 3.70

(a) α = -4.15°

	Cp at y/b of													
	0.02		0.22		0.44		0.56		0.67		0.83		0.98	
x/c	U.S.	L.S.	U.S.	L.S.	U.S.	L.S.	U.S.	L.S.	U.S.	L.S.	U.S.	L.S.	U.S.	L.S.
.05			.1367	.1302	.1383	.1973	.1335	.2137		.1557			.1588	.1583
.10	.0592	.0777	.1359	.1812	.1394	.1918		.2752	.1405	.1986	.1405	.1956	.1840	.1894
.15	.0557	.0691	.1311	.1838	.1388	.1959			.1363	.1934			.1450	.1937
.20	.0467	.0603	.1255	.1799	.1367	.1925	.1771	.3670	.1349	.1931	.1427	.1957	.1352	[illegible]
.25	.0027	.0093			.1340	.1918	.1355	.1372	.1357	.1919	.1403	.1921	.1254	.1753
.30	.0001	.0058							.1338	.1884	.1375	.1928	.1150	.1515
.40	.0006	.0066	.0063	.0269	.0166	.0376	.0133	.0372	.0233	.0583	.1320	.1817	.1052	.1521
.50			-.0023	.0179	.0071	.0244	.0012	.0257			.0305	.0455	.0933	.1355
.60					.0010	.0196	.0163	.1450	-.0008	.0274	.0012	.0153	-.0468	-.0357
.70	-.0012	.0200	-.0082	.0019	-.0045	.0139	-.0175	.0044	-.0512	-.0286	-.0487	-.0368	-.0512	-.0463
.80	-.0362	-.0148	-.0451	-.0381			-.0552	-.0387	-.0384	-.0273	-.0481	-.0453	-.0517	-.0451
.90	-.0365	-.0287	-.0397	-.0375	-.0329	-.0187	-.0491	-.0399	-.0386	-.0357	-.0414	-.0421		
.95	-.0374	-.0283	-.0392	-.0366			-.0484	-.0374	-.0377	-.0333	-.0402	-.0396		-.0410

TAIL 1

	Cp at y/b of													
	0.02		0.22		0.44		0.56		0.67		0.83		0.98	
x/c	U.S.	L.S.	U.S.	L.S.	U.S.	L.S.	U.S.	L.S.	U.S.	L.S.	U.S.	L.S.	U.S.	L.S.
.05	.1080	.0216	.2944	.0842			.2746	.0851			.2624	.1487	.2500	.0835
.10	.1250	.0156					.2911	.0972	.2929	.1277			.2745	.0913
.15					.2898	.0849	.2895	.0931	.2940	.0951			.2560	.0819
.20	.1337	.0167					.2904	.0885	.2877	.0697			.2415	.0726
.25	.0367	-.0135	.1470	.0484	.2898	.0794	.2915	.0857	.2903	.0877	.2788	.0880	.2315	.0647
.30			.0835	-.0057			.2842	.0785	.2863	.0849	.2833	.0891	.2287	.0603
.40	.0159	.0469							.1091	.0013	.2725	.0769	.2292	.0536
.50					.0689	.0036	.0739	-.0121	.0765	-.0132	.0923	-.0015	.1957	.0316
.60	.0424	.0191	.0470	-.0112			.0694	-.0203	.0684	-.0167	.0442	-.0212	-.0273	-.0419
.70					.0547	-.0176	.0107	-.0368	-.0345	-.0180	-.0317	-.0368	-.0404	-.0269
.80	-.0184	-.0294	-.0355	-.0372	-.0280	-.0317	-.0346	-.0397			-.0420	-.0356		
.90	-.0347	-.0406	-.0479	-.0338	-.0417	-.0354	-.0421	-.0383	-.0467	-.0302	-.0459	-.0328	-.0391	-.0366
.95			-.0501	-.0405	-.0450	-.0338	-.0447	-.0387	-.0488	-.0307	-.0477	-.0361	-.0459	-.0442

TAIL 2

TABLE XI. - CONTINUED

(b) α = -2.15°

	Cp at y/b of													
	0.02		0.22		0.44		0.56		0.67		0.83		0.98	
x/c	U.S.	L.S.	U.S.	L.S.	U.S.	L.S.	U.S.	L.S.	U.S.	L.S.	U.S.	L.S.	U.S.	L.S.
.05			.1410	.1413	.1372	.1977	.1392	.2225		.1574			.1589	.1630
.10	.0500	.0649	.1378	.1812	.1410	.1922		.2224	.1445	.2049	.1436	.1959	.1582	.2011
.15	.0466	.0624	.1305	.1829	.1405	.1957			.1397	.1959			.1464	.1930
.20	.0429	.0561	.1259	.1771	.1381	.1933	.1497	.2415	.1392	.1944	.1454	.2010	.1380	.1837
.25	.0038	.0089			.1354	.1929	.1364	.1985	.1335	.1923	.1429	.1959	.1239	.1730
.30	.0041	.0104							.1360	.1896	.1403	.1958	.1122	.1612
.40	.0067	.0119	.0011	.0177	.0140	.0353	.0144	.0359	.0254	.0576	.1342	.1949	.1042	.1462
.50			-.0072	.0068	.0033	.0219	.0023	.0219			.0322	.0494	.0935	.1254
.60					.0000	.0165	.0143	.0897	-.0004	.0236	.0022	.0165	-.0465	-.0423
.70	.0020	.0190	-.0075	.0032	-.0058	.0112	-.0173	-.0018	-.0508	-.0326	-.0503	-.0433	-.0513	-.0482
.80	-.0316	-.0188	-.0453	-.0403			-.0557	-.0456	-.0448	-.0414	-.0494	-.0504	-.0523	-.0497
.90	-.0343	-.0310	-.0405	-.0418	-.0357	-.0311	-.0488	-.0463	-.0430	-.0465	-.0435	-.0456		
.95	-.0370	-.0320	-.0400	-.0403			-.0484	-.0431	-.0417	-.0428	-.0421	-.0427		-.0422

TAIL 1

	Cp at y/b of													
	0.02		0.22		0.44		0.56		0.67		0.83		0.98	
x/c	U.S.	L.S.	U.S.	L.S.	U.S.	L.S.	U.S.	L.S.	U.S.	L.S.	U.S.	L.S.	U.S.	L.S.
.05	.0805	.0450	.2361	.1259			.2251	.1179			.2423	.1295	.2055	.1219
.10	.0960	.0305					.2374	.1373	.2387	.1393			.2242	.1264
.15					.2319	.1261	.2345	.1320	.2383	.1347			.2091	.1162
.20	.0975	.0346					.2342	.1283	.2319	.1296			.1961	.1066
.25	.0302	-.0065	.1121	.0851	.2316	.1212	.2346	.1258	.2343	.1281	.2282	.1265	.1869	.0964
.30			.0560	.0016			.2294	.1157	.2333	.1248	.2319	.1290	.1801	.0902
.40	.0366	.0192							.0764	.0195	.2222	.1141	.1822	.0807
.50					.0470	-.0046	.0453	-.0044	.0493	.0004	.0670	.0086	.1565	.0542
.60	.0413	.0013	.0243	-.0196			.0396	-.0112	.0412	-.0051	.0234	-.0208	-.0320	-.0446
.70					.0296	-.0176	-.0016	-.0367	-.0290	-.0395	-.0353	-.0480	-.0385	-.0413
.80	-.0240	-.0332	-.0398	-.0422	-.0343	-.0395	-.0417	-.0446			-.0451	-.0428		
.90	-.0363	-.0465	-.0498	-.0422	-.0461	-.0397	-.0480	-.0415	-.0462	-.0397	-.0475	-.0400	-.0423	-.0371
.95			-.0473	-.0427	-.0447	-.0388	-.0468	-.0411	-.0457	-.0402	-.0459	-.0413	-.0466	-.0422

TAIL 2

TABLE XI. - CONTINUED

(c) α = -0.15°

	Cp at y/b of													
	0.02		0.22		0.44		0.56		0.67		0.83		0.98	
x/c	U.S.	L.S.	U.S.	L.S.	U.S.	L.S.	U.S.	L.S.	U.S.	L.S.	U.S.	L.S.	U.S.	L.S.
.05			.1453	.1397	.1401	.2028	.1433	.2238		.1596			.1554	.1677
.10	.0551	.0735	.1429	.1872	.1427	.1931		.2194	.1473	.2107	.1438	.1979	.1660	[illegible]
.15	.0553	.0753	.1357	.1855	.1415	.1969			.1426	.1986			[illegible]	[illegible]
.20	.0495	.0708	.1301	.1791	.1396	.1970	.1418	.2128	.1406	.1949	.1480	.2015	.1355	.1812
.25	.0041	.0099			.1370	.1938	.1391	.2012	.1413	.1934	.1453	.2007	[illegible]	[illegible]
.30	.0042	.0122							.1392	.1903	.1426	.1977	.1084	.1547
.40	.0047	.0110	.0027	.0202	.0124	.0366	.0140	.0355	.0246	.0601	.1364	.1974	.1005	.1405
.50			-.0059	.0085	.0028	.0222	.0004	.0219			.0326	.0492	.0835	.1200
.60					-.0007	.0160	.0116	.0636	-.0019	.0225	.0023	.0163	-.0456	-.0431
.70	.0011	.0167	-.0075	.0034	-.0082	.0096	-.0200	-.0037	-.0524	-.0339	-.0511	-.0443	-.0521	-.0484
.80	-.0330	-.0209	-.0467	-.0428			-.0583	-.0468	-.0458	-.0440	-.0490	-.0523	-.0539	-.0527
.90	-.0363	-.0345	-.0403	-.0433	-.0394	-.0350	-.0513	-.0479	-.0435	-.0491	-.0437	-.0462		
.95	-.0393	-.0357	-.0398	-.0412			-.0503	-.0444	-.0422	-.0454	-.0424	-.0435		-.0444

TAIL 1

	Cp at y/b of													
	0.02		0.22		0.44		0.56		0.67		0.83		0.98	
x/c	U.S.	L.S.	U.S.	L.S.	U.S.	L.S.	U.S.	L.S.	U.S.	L.S.	U.S.	L.S.	U.S.	L.S.
.05	.0598	.0665	.1813	.1769			.1787	.1558			.2020	.1633	.1645	.1576
.10	.0693	.0549					.1868	.1828	.1888	.1798			.1764	.1657
.15					.1791	.1739	.1831	.1782	.1879	.1800			.1664	.1554
.20	.0678	.0603					.1821	.1742	.1811	.1752			.1533	.1453
.25	.0153	.0081	.0731	.1311	.1779	.1699	.1826	.1715	.1825	.1732	.1809	.1711	.1465	.1324
.30			.0285	.0245			.1779	.1595	.1816	.1699	.1842	.1751	.1390	.1251
.40	.0211	.0157							.0476	.0440	.1756	.1582	.1395	.1139
.50					.0229	.0115	.0205	.0147	.0256	.0205	.0415	.0287	.1186	.0821
.60	.0252	.0088	.0019	-.0085			.0141	.0084	.0183	.0135	.0040	-.0085	-.0331	-.0420
.70					.0068	-.0012	-.0196	-.0265	-.0361	-.0396	-.0439	-.0475	-.0424	-.0418
.80	-.0294	-.0304	-.0478	-.0470	-.0434	-.0440	-.0509	-.0496			-.0509	-.0454		
.90	-.0406	-.0455	-.0458	-.0425	-.0435	-.0406	-.0459	-.0421	-.0440	-.0400	-.0451	-.0401	-.0411	-.0404
.95			-.0443	-.0421	-.0410	-.0383	-.0434	-.0404	-.0432	-.0402	-.0437	-.0407	-.0435	-.0423

TAIL 2

TABLE XI. - CONTINUED

(d) α = 1.86°

	Cp at y/b of													
	0.02		0.22		0.44		0.56		0.67		0.83		0.98	
x/c	U.S.	L.S.	U.S.	L.S.	U.S.	L.S.	U.S.	L.S.	U.S.	L.S.	U.S.	L.S.	U.S.	L.S.
.05			.1477	.1405	.1441	.2105	.1465	.2259		.1612			.1595	.1713
.10	.0670	.0937	.1464	.1997	.1449	.1963		.2189	.1497	.2129	.1437	.1984	.1708	.2051
.15	.0674	.0963	.1400	.1927	.1437	.1996			.1454	.2014			.1451	.1841
.20	.0592	.0891	.1348	.1858	.1415	.1990	.1416	.2058	.1431	.1960	.1488	.2016	.1309	.1825
.25	.0025	.0099			.1392	.1976	.1403	.2029	.1440	.1937	.1462	.2022	.1196	.1682
.30	.0016	.0104							.1418	.1912	.1443	.1999	.1095	.1542
.40	.0000	.0057	.0048	.0232	.0135	.0359	.0174	.0359	.0256	.0570	.1380	.1891	.1002	.1413
.50			-.0036	.0112	.0047	.0228	.0031	.0222			.0330	.0505	.0910	.1197
.60					.0009	.0162	.0116	.0508	.0015	.0235	.0027	.0179	-.0438	-.0413
.70	-.0046	.0110	-.0073	.0051	-.0054	.0090	-.0173	-.0049	-.0476	-.0325	-.0515	-.0442	-.0516	-.0490
.80	-.0394	-.0258	-.0468	-.0415			-.0555	-.0465	-.0466	-.0450	-.0499	-.0532	-.0542	-.0551
.90	-.0415	-.0401	-.0400	-.0449	-.0369	-.0361	-.0488	-.0480	-.0439	-.0504	-.0441	-.0495		
.95	-.0427	-.0407	-.0394	-.0418			-.0473	-.0446	-.0428	-.0469	-.0430	-.0462		-.0443

TAIL 1

	Cp at y/b of													
	0.02		0.22		0.44		0.56		0.67		0.83		0.98	
x/c	U.S.	L.S.	U.S.	L.S.	U.S.	L.S.	U.S.	L.S.	U.S.	L.S.	U.S.	L.S.	U.S.	L.S.
.05	.0392	.0867	.1308	.2325			.1370	.1972			.1642	.2084	.1271	.1977
.10	.0455	.0820					.1411	.2331	.1432	.2283			.1365	.2094
.15					.1307	.2278	.1368	.2294	.1414	.2298			.1260	.2001
.20	.0390	.0875					.1351	.2247	.1348	.2245			.1146	.1876
.25	-.0017	.0275	.0400	.1809	.1289	.2228	.1351	.2219	.1358	.2234	.1363	.2210	.1087	.1723
.30			.0028	.0557			.1311	.2087	.1344	.2193	.1383	.2257	.1030	.1644
.40	.0049	.0221							.0220	.0708	.1311	.2068	.1001	.1512
.50					.0039	.0370	.0000	.0388	.0047	.0441	.0186	.0541	.0841	.1136
.60	.0125	.0238	-.0152	.0111			-.0064	.0326	-.0012	.0359	-.0131	.0078	-.0432	-.0381
.70					-.0112	.0227	-.0329	-.0118	-.0424	-.0338	-.0503	-.0425	-.0440	-.0390
.80	-.0304	-.0246	-.0472	-.0434	-.0420	-.0389	-.0471	-.0443			-.0468	-.0473		
.90	-.0419	-.0413	-.0449	-.0469	-.0407	-.0464	-.0434	-.0476	-.0427	-.0449	-.0432	-.0447	-.0384	-.0435
.95			-.0447	-.0442	-.0396	-.0422	-.0427	-.0449	-.0429	-.0433	-.0431	-.0431	-.0427	-.0464

TAIL 2

TABLE XI. - CONTINUED

(e) α = 3.85°

	Cp at y/b of													
	0.02		0.22		0.44		0.56		0.67		0.83		0.98	
x/c	U.S.	L.S.	U.S.	L.S.	U.S.	L.S.	U.S.	L.S.	U.S.	L.S.	U.S.	L.S.	U.S.	L.S.
.05			.1531	.1484	.1500	.2213	.1553	.2325		.1652			.1677	.1788
.10	.0774	.1127	.1518	.2086	.1502	.2017		.2238	.1571	.2198	.1497	.2084	.1827	.2144
.15	.0771	.1163	.1452	.1995	.1488	.2043			.1520	.2063			.1463	.1918
.20	.0667	.1074	.1404	.1965	.1461	.2035	.1431	.2074	.1497	.2015	.1562	.2100	.1355	.1827
.25	.0022	.0137			.1435	.2028	.1462	.2080	.1499	.1985	.1536	.2105	.1235	.1720
.30	.0012	.0122							.1474	.1961	.1512	.2075	.1153	.1615
.40	-.0008	.0071	.0074	.0258	.0147	.0359	.0184	.0382	.0310	.0573	.1448	.1959	.1032	.1481
.50			-.0022	.0149	.0055	.0241	.0043	.0236			.0364	.0563	.0957	.1236
.60					.0016	.0175	.0123	.0424	.0007	.0231	.0046	.0203	-.0414	-.0367
.70	-.0077	.0079	-.0063	.0059	-.0048	.0099	-.0154	-.0055	-.0491	-.0339	-.0511	-.0433	-.0523	-.0464
.80	-.0434	-.0287	-.0469	-.0397			-.0567	-.0465	-.0477	-.0455	-.0519	-.0531	-.0451	-.0528
.90	-.0419	-.0425	-.0401	-.0455	-.0389	-.0372	-.0489	-.0485	-.0445	-.0511	-.0451	-.0513		
.95	-.0419	-.0425	-.0399	-.0422			-.0476	-.0448	-.0433	-.0474	-.0437	-.0472		-.0475

TAIL 1

	Cp at y/b of													
	0.02		0.22		0.44		0.56		0.67		0.83		0.98	
x/c	U.S.	L.S.	U.S.	L.S.	U.S.	L.S.	U.S.	L.S.	U.S.	L.S.	U.S.	L.S.	U.S.	L.S.
.05	.0179	.1142	.0872	.2919			.0992	.2433			.1247	.2517	.0931	.2406
.10	.0230	.1107					.1002	.2882	.1035	.2804			.0983	.2563
.15					.0881	.2863	.0952	.2856	.0998	.2835			.0891	.2479
.20	.0156	.1186					.0930	.2813	.0937	.2791			.0797	.2310
.25	-.0180	.0438	.0152	.2272	.0851	.2799	.0927	.2782	.0940	.2785	.0954	.2750	.0743	.2168
.30			-.0177	.0864			.0894	.2622	.0931	.2729	.0964	.2796	.0703	.2068
.40	-.0107	.0329							.0021	.1007	.0899	.2565	.0670	.1930
.50					-.0139	.0646	-.0167	.0665	-.0130	.0709	-.0018	.0809	.0539	.1504
.60	.0014	.0414	-.0272	.0410			-.0238	.0608	-.0176	.0627	-.0282	.0259	-.0473	-.0319
.70					-.0273	.0485	-.0438	.0068	-.0457	-.0252	-.0482	-.0340	-.0430	-.0355
.80	-.0299	-.0151	-.0467	-.0339	-.0397	-.0287	-.0448	-.0338			-.0451	-.0409		
.90	-.0396	-.0346	-.0462	-.0468	-.0410	-.0402	-.0433	-.0399	-.0433	-.0404	-.0429	-.0427	-.0404	-.0386
.95			-.0462	-.0477	-.0402	-.0416	-.0433	-.0422	-.0440	-.0420	-.0437	-.0441	-.0447	-.0436

TAIL 2

TABLE XI.- CONTINUED

(f) α = 5.85°

	Cp at y/b of													
	0.02		0.22		0.44		0.56		0.67		0.83		0.98	
x/c	U.S.	L.S.	U.S.	L.S.	U.S.	L.S.	U.S.	L.S.	U.S.	L.S.	U.S.	L.S.	U.S.	L.S.
.05			.1673	.1643	.1642	.2394	.1667	.2484		.1747			.1846	.1956
.10	.0925	.1331	.1661	.2256	.1642	.2185		.2356	.1690	.2353	.1635	.2272	[illegible]	.2309
.15	.0908	.1377	.1595	.2165	.1624	.2133			.1642	.2216			.1583	.2060
.20	.0780	.1259	.1541	.2116	.1591	.2181	.1510	.2158	.1621	.2162	.1707	.2260	.1461	.1922
.25	.0064	.0189			.1566	.2158	.1366	.2222	.1624	.2132	.1683	.2272	.1361	.1790
.30	.0056	.0175							.1602	.2039	.1662	.2245	.1292	.1742
.40	.0029	.0117	.0122	.0333	.0171	.0391	.0256	.0439	.0365	.0644	.1592	.2137	.1240	.1645
.50			.0023	.0186	.0076	.0275	.0102	.0285			.0445	.0856	.1130	.1402
.60					.0030	.0213	.0138	.0389	.0055	.0286	.0105	.0265	-.0362	-.0320
.70	-.0064	.0092	-.0031	.0081	-.0019	.0144	-.0120	-.0011	-.0458	-.0314	-.0433	-.0414	-.0449	-.0456
.80	-.0442	-.0298	-.0466	-.0398			-.0552	-.0460	-.0480	-.0455	-.0526	-.0523	-.0413	-.0447
.90	-.0397	-.0436	-.0396	-.0474	-.0356	-.0378	-.0473	-.0484	-.0438	-.0508	-.0449	-.0515		
.95	-.0393	-.0436	-.0393	-.0438			-.0457	-.0443	-.0423	-.0469	-.0429	-.0467		-.0527

TAIL 1

	Cp at y/b of													
	0.02		0.22		0.44		0.56		0.67		0.83		0.98	
x/c	U.S.	L.S.	U.S.	L.S.	U.S.	L.S.	U.S.	L.S.	U.S.	L.S.	U.S.	L.S.	U.S.	L.S.
.05	-.0034	.1331	.0486	.3543			.0649	.2937			.0907	.3012	.0534	.2872
.10	.0035	.1253					.0634	.3489	.0688	.3385			.0610	.3039
.15					.0499	.3483	.0582	.3460	.0631	.3423			.0530	.2953
.20	-.0027	.1340					.0552	.3428	.0567	.3396			.0462	.2771
.25	-.0296	.0530	-.0097	.2725	.0452	.3386	.0545	.3386	.0562	.3364	.0593	.3327	.0426	.2609
.30			-.0341	.1152			.0515	.3190	.0555	.3295	.0591	.3331	.0398	.2505
.40	-.0204	.0500							-.0165	.1335	.0533	.3115	.0390	.2384
.50					-.0272	.0958	-.0307	.0939	-.0287	.1024	-.0184	.1101	.0265	.1855
.60	-.0092	.0671	-.0349	.0684			-.0364	.0937	-.0318	.0942	-.0390	.0494	-.0490	-.0244
.70					-.0391	.0779	-.0492	.0294	-.0445	-.0119	-.0477	-.0224	-.0435	-.0341
.80	-.0322	-.0009	-.0512	-.0213	-.0424	-.0162	-.0467	-.0196			-.0464	-.0304		
.90	-.0426	-.0245	-.0509	-.0380	-.0442	-.0301	-.0455	-.0277	-.0449	-.0310	-.0449	-.0337	-.0419	-.0346
.95			-.0504	-.0417	-.0437	-.0335	-.0455	-.0312	-.0455	-.0335	-.0458	-.0370	-.0450	-.0406

TAIL 2

TABLE [illegible] CONTINUED
(g) β = 7.35°

	Cp at y/b of													
	0.02		0.22		0.44		0.56		0.67		0.83		0.98	
x/c	U.S.	L.S.	U.S.	L.S.	U.S.	L.S.	U.S.	L.S.	U.S.	L.S.	U.S.	L.S.	U.S.	L.S.
.05			.1930	.1904	.1975	.2687	.1834	.2753		.1965			.0367	[illegible]
.10	.1153	.1336	.1926	.2509	.1677	.2451		.2597	.1922	.2633	.1840	.2542	[illegible]	[illegible]
.15	.1131	.1645	.1850	.2470	.1957	.2434			.1864	.2469			[illegible]	[illegible]
.20	.0973	.1438	.1794	.2386	.1923	.2428	.1654	.2379	.1838	.2414	.1921	[illegible]	[illegible]	[illegible]
.25	.0165	.0305			.1796	.2415	.1735	[illegible]	.1842	.2383	.1697	.2320	[illegible]	[illegible]
.30	.0156	.0294							.1820	.2346	.1875	.2497	[illegible]	[illegible]
.40	.0123	.0233	.0233	.0465	.0271	.0503	.0360	.0567	.0490	.0760	.1802	.2371	[illegible]	.1381
.50			.0119	.0303	.0167	.0384	.0229	.0391			.0551	.0770	[illegible]	.1802
.60					.0125	.0321	.0196	.0404	.0170	.0370	.0197	.0357	-.0268	-.0241
.70	.0012	.0139	.0058	.0186	.0058	.0244	-.0038	.0056	-.0403	-.0295	-.0457	-.0376	-.0309	-.0403
.80	-.0419	-.0251	-.0435	-.0347			-.0513	-.0437	-.0464	-.0433	-.0495	-.0491	-.0519	-.0323
.90	-.0368	-.0396	-.0366	-.0438	-.0360	-.0368	-.0423	-.0462	-.0405	-.0470	-.0409	-.0474		
.95	-.0361	-.0401	-.0360	-.0396			-.0410	-.0413	-.0387	-.0424	-.0397	-.0424		-.0470

TAIL 1

	Cp at y/b of													
	0.02		0.22		0.44		0.56		0.67		0.83		0.98	
x/c	U.S.	L.S.	U.S.	L.S.	U.S.	L.S.	U.S.	L.S.	U.S.	L.S.	U.S.	L.S.	U.S.	L.S.
.05	-.0221	.1291	.0156	.4126			.0337	.3449			.0555	.3538	.0368	.3396
.10	-.0153	.1161					.0302	.4086	.0334	.3970			.0370	.3609
.15					.0171	.4099	.0243	.4091	.0278	.4038			.0292	.3504
.20	-.0169	.1263					.0219	.4039	.0228	.3997			.0244	.3325
.25	-.0376	.0528	-.0301	.3141	.0108	.3982	.0208	.3970	.0220	.3962	.0232	.3883	.0218	.3122
.30			-.0469	.1383			.0191	.3744	.0215	.3910	.0208	.3894	.0205	.2997
.40	-.0270	.0693							-.0321	.1708	.0150	.3703	.0194	.2879
.50					-.0388	.1276	-.0428	.1352	-.0416	.1410	-.0357	.1339	.0073	.2279
.60	-.0252	.0920	-.0421	.0948			-.0506	.1300	-.0428	.1318	-.0495	.0759	-.0501	-.0117
.70					-.0443	.1042	-.0495	.0505	-.0443	.0054	-.0489	-.0048	-.0448	-.0303
.80	-.0412	.0151	-.0538	-.0088	-.0453	-.0039	-.0436	-.0043			-.0486	-.0140		
.90	-.0487	-.0131	-.0550	-.0273	-.0480	-.0182	-.0488	-.0136	-.0475	-.0166	-.0471	-.0195	-.0433	-.0337
.95			-.0544	-.0315	-.0478	-.0224	-.0465	-.0160	-.0482	-.0196	-.0483	-.0229	-.0484	-.0405

TAIL 2

TABLE XI. - CONTINUED
(h) α = 9.85°

	Cp at y/b of													
	0.02		0.22		0.44		0.56		0.67		0.83		0.98	
x/c	U.S.	L.S.	U.S.	L.S.	U.S.	L.S.	U.S.	L.S.	U.S.	L.S.	U.S.	L.S.	U.S.	L.S.
.05			.2254	.2240	.2161	.3050	.2123	.3111		.2256			.2359	.2473
.10	.1453	.1937	.2258	.2853	.2173	.2798		.2910	.2220	.2966	.2094	.2868	.2384	.2906
.15	.1409	.1991	.2177	.2857	.2151	.2767			.2145	.2792			.1962	.2500
.20	.1221	.1809	.2118	.2770	.2115	.2761	.1893	.2630	.2118	.2727	.2190	.2822	.1845	.2375
.25	.0300	.0455			.2099	.2743	.2106	.2807	.2123	.2688	.2164	.2837	.1739	.2213
.30	.0295	.0443							.2095	.2648	.2144	.2906	.1687	.2124
.40	.0258	.0383	.0376	.0619	.0393	.0659	.0453	.0736	.0611	.0927	.2262	.2658	.1631	.2140
.50			.0248	.0434	.0292	.0529	.0324	.0541			.0692	.0927	.1581	.1975
.60					.0246	.0467	.0223	.0468	.0256	.0513	.0310	.0483	-.0213	-.0146
.70	.0119	.0336	.0179	.0306	.0179	.0394	.0044	.0173	-.0397	-.0213	-.0414	-.0329	-.0220	-.0331
.80	-.0377	-.0194	-.0391	-.0305			-.0504	-.0379	-.0437	-.0402	-.0455	-.0404	-.0540	-.0465
.90	-.0335	-.0358	-.0323	-.0411	-.0336	-.0326	-.0405	-.0406	-.0356	-.0422	-.0359	-.0411		
.95	-.0316	-.0367	-.0308	-.0360			-.0382	-.0350	-.0335	-.0372	-.0339	-.0365		-.0475

TAIL 1

	Cp at y/b of													
	0.02		0.22		0.44		0.56		0.67		0.83		0.98	
x/c	U.S.	L.S.	U.S.	L.S.	U.S.	L.S.	U.S.	L.S.	U.S.	L.S.	U.S.	L.S.	U.S.	L.S.
.05	-.0299	.1217	-.0051	.4628			.0098	.4002			.0414	.4169	.0251	.3998
.10	-.0222	.1108					.0044	.4719	.0149	.4659			.0252	.4306
.15					-.0095	.4756	-.0008	.4773	.0065	.4753			.0189	.4160
.20	-.0255	.1209					-.0051	.4708	.0000	.4707			.0158	.3941
.25	-.0417	.0541	-.0398	.3444	-.0172	.4596	-.0069	.4640	-.0023	.4678	.0107	.4525	.0142	.3728
.30			-.0527	.1642			-.0094	.4386	-.0034	.4607	.0067	.4595	.0133	.3675
.40	-.0313	.0890							-.0437	.2136	.0012	.4396	.0129	.3462
.50					-.0442	.1596	-.0510	.1723	-.0508	.1855	-.0420	.1634	.0014	.2777
.60	-.0335	.1142	-.0455	.1214			-.0561	.1656	-.0501	.1744	-.0538	.1124	-.0541	.0060
.70					-.0462	.1339	-.0518	.0750	-.0460	.0280	-.0526	.0162	-.0472	-.0207
.80	-.0463	.0283	-.0565	.0043	-.0489	.0099	-.0538	.0116			-.0524	.0061		
.90	-.0525	-.0024	-.0579	-.0129	-.0520	-.0041	-.0531	.0010	-.0503	-.0010	-.0509	-.0010	-.0459	-.0288
.95			-.0569	-.0181	-.0516	-.0088	-.0530	-.0036	-.0514	-.0044	-.0524	-.0040	-.0516	-.0357

TAIL 2

TABLE XI. - CONTINUED

(i) α = 11.34°

	Cp at y/b of													
	0.02		0.22		0.44		0.56		0.67		0.83		0.98	
x/c	U.S.	L.S.	U.S.	L.S.	U.S.	L.S.	U.S.	L.S.	U.S.	L.S.	U.S.	L.S.	U.S.	L.S.
.05			.2645	.2621	.2507	.3479	.2381	.3525		.2583			.2661	.2816
.10	.1814	.2312	.2652	.3276	.2516	.3191		.3271	.2527	.3370	.2408	.3243	[illegible]	[illegible]
.15	.1751	.2378	.2564	.3319	.2491	.3168			.2467	.3172			.2190	.2824
.20	.1529	.2169	.2499	.3232	.2451	.3173	.2195	.2941	.2435	.3104	.2505	.3178	.2102	.2644
.25	.0485	.0640			.2423	.3148	.2415	.3197	.2441	.3060	.2479	.3133	.2031	.2482
.30	.0484	.0524							.2412	.3014	.2459	.3165	.1957	.2416
.40	.0443	.0572	.0560	.0815	.0584	.0925	.0680	.0933	.0802	.1117	.2371	.3042	.1930	.2432
.50			.0424	.0609	.0484	.0700	.0491	.0712			.0859	[illegible]	.1940	.2207
.60					.0434	.0640	.0339	.0550	.0441	.0673	.0455	.0617	-.0156	-.0074
.70	.0274	.0517	.0334	.0468	.0367	.0560	.0209	.0310	-.0282	-.0145	-.0352	-.0281	-.0225	-.0229
.80	-.0311	-.0104	-.0327	-.0226			-.0413	-.0320	-.0389	-.0362	-.0400	-.0413	-.0343	-.0261
.90	-.0278	-.0285	-.0249	-.0349	-.0259	-.0257	-.0304	-.0354	-.0278	-.0376	-.0295	-.0354		
.95	-.0243	-.0294	-.0232	-.0289			-.0275	-.0287	-.0254	-.0315	-.0263	-.0310		-.0533

TAIL 1

	Cp at y/b of													
	0.02		0.22		0.44		0.56		0.67		0.83		0.98	
x/c	U.S.	L.S.	U.S.	L.S.	U.S.	L.S.	U.S.	L.S.	U.S.	L.S.	U.S.	L.S.	U.S.	L.S.
.05	-.0418	.1616	-.0195	.5165			.0030	.4717			.0334	.4954	.0169	.4715
.10	-.0311	.1263					-.0022	.5512	.0081	.5471			.0179	.5109
.15					-.0165	.5463	-.0063	.5573	-.0007	.5570			.0120	.4926
.20	-.0348	.1322					-.0124	.5471	-.0072	.5511			.0100	.4706
.25	-.0483	.0651	-.0478	.3811	-.0263	.5139	-.0144	.5387	-.0099	.5491	.0034	.5393	.0086	.4517
.30			-.0568	.1927			-.0169	.5081	-.0111	.5438	-.0003	.5486	.0084	.4417
.40	-.0353	.1179							-.0478	.2627	-.0067	.5272	.0082	.4212
.50					-.0467	.1932	-.0542	.2081	-.0542	.2321	-.0461	.2163	-.0030	.3373
.60	-.0389	.1419	-.0480	.1504			-.0534	.2009	-.0534	.2153	-.0575	.1543	-.0531	.0277
.70					-.0491	.1637	-.0553	.1013	-.0486	.0513	-.0573	.0456	-.0530	-.0052
.80	-.0498	.0409	-.0573	.0238	-.0528	.0266	-.0582	.0292			-.0571	.0345		
.90	-.0565	.0093	-.0611	.0046	-.0559	.0118	-.0579	.0176	-.0538	.0168	-.0555	.0266	-.0530	-.0157
.95			-.0608	-.0006	-.0547	.0074	-.0576	.0125	-.0552	.0148	-.0570	.0227	-.0583	-.0245

TAIL 2

TABLE XI. - CONTINUED

(j) α = 15.94°

	Cp at y/b of													
	0.02		0.22		0.44		0.56		0.67		0.83		0.98	
x/c	U.S.	L.S.	U.S.	L.S.	U.S.	L.S.	U.S.	L.S.	U.S.	L.S.	U.S.	L.S.	U.S.	L.S.
.05			.3624	.3527	.3345	.4538	.3040	.4526		.3342			.2146	.2265
.10	.2654	.3244	.3648	.4490	.3385	.4161		.4212	.3356	.4308	.3109	.4126	.1708	.2369
.15	.2549	.3332	.3534	.4465	.3354	.4176			.3280	.4094			.1627	.2293
.20	.2277	.3056	.3456	.4381	.3318	.4184	.2859	.3693	.3261	.4012	.3252	.4045	.1776	.2468
.25	.0937	.1122			.3284	.4155	.3255	.4177	.3276	.3963	.3223	.4050	.1916	.2590
.30	.0948	.1105							.3244	.3920	.3206	.4019	.2042	.2561
.40	.0911	.1088	.1026	.1314	.1013	.1311	.1123	.1427	.1295	.1674	.3104	.3857	.2197	.2758
.50			.0864	.1055	.0910	.1179	.0923	.1174			.1227	.1466	.2174	.2533
.60					.0871	.1122	.0574	.0775	.0857	.1082	.0759	.0908	.0007	.0066
.70	.0687	.1010	.0732	.0887	.0786	.1038	.0571	.0655	-.0077	.0049	-.0228	-.0175	-.0130	-.0105
.80	-.0135	.0125	-.0160	-.0041			-.0242	-.0142	-.0290	-.0257	-.0214	-.0300	-.0335	-.0210
.90	-.0103	-.0112	-.0073	-.0198	-.0139	-.0169	-.0110	-.0190	-.0135	-.0228	-.0113	-.0177		
.95	-.0053	-.0099	-.0042	-.0111			-.0077	-.0105	-.0101	-.0152	-.0094	-.0141		-.0333

TAIL 1

	Cp at y/b of													
	0.02		0.22		0.44		0.56		0.67		0.83		0.98	
x/c	U.S.	L.S.	U.S.	L.S.	U.S.	L.S.	U.S.	L.S.	U.S.	L.S.	U.S.	L.S.	U.S.	L.S.
.05	-.0578	.2227	-.0238	.6573			.0006	.6566			.0279	.7042	.0128	.6450
.10	-.0449	.1645					-.0047	.7522	.0054	.7548			.0156	.7094
.15					-.0184	.7120	-.0111	.7471	-.0041	.7707			.0117	.6901
.20	-.0482	.1772					-.0160	.7200	-.0109	.7593			.0105	.6750
.25	-.0583	.1015	-.0526	.4922	-.0299	.6554	-.0184	.6987	-.0139	.7368	-.0008	.7863	.0104	.6506
.30			-.0602	.2640			-.0211	.6589	-.0151	.7169	-.0063	.7545	.0103	.6399
.40	-.0415	.1717							-.0500	.3637	-.0119	.6803	.0107	.6048
.50					-.0494	.2720	-.0555	.2956	-.0555	.3267	-.0484	.3531	.0047	.4861
.60	-.0450	.2008	-.0513	.2264			-.0633	.2881	-.0552	.3065	-.0594	.2683	-.0594	.0740
.70					-.0525	.2452	-.0598	.1572	-.0518	.1001	-.0604	.1048	-.0549	.0288
.80	-.0527	.0706	-.0631	.0710	-.0564	.0681	-.0619	.0718			-.0603	.0849		
.90	-.0602	.0381	-.0657	.0482	-.0591	.0515	-.0610	.0598	-.0563	.0644	-.0587	.0750	-.0556	.0149
.95			-.0658	.0445	-.0579	.0460	-.0610	.0540	-.0591	.0594	-.0598	.0688	-.0625	.0090

TAIL 2

TABLE XI. - CONCLUDED
(k) α = 19.95°

	Cp at y/b of													
	0.02		0.22		0.44		0.56		0.67		0.93		0.98	
x/c	U.S.	L.S.	U.S.	L.S.	U.S.	L.S.	U.S.	L.S.	U.S.	L.S.	U.S.	L.S.	U.S.	L.S.
.05			.4864	.4635	.4390	.5844	.3938	.5759		.4335			.2255	[illegible]
.10	.3745	.4406	.4306	.6009	.4476	.5338		.5521	.4112	.5092	.1937	.1503	[illegible]	[illegible]
.15	.3553	.4527	.4741	.5914	.4445	.5449			.3961	.4826			[illegible]	[illegible]
.20	.3229	.4178	.4637	.5796	.4410	.5446	.3792	.4900	.3907	.4658	.1941	.2437	[illegible]	[illegible]
.25	.1527	.1771			.4373	.5420	.4250	.5339	.3894	.4546	.1839	.2485	[illegible]	[illegible]
.30	.1559	.1740							.3755	.4431	.1303	.2519	.1507	[illegible]
.40	.1546	.1785	.1620	.1965	.1562	.1932	.1688	.2025	.1509	.1850	.1336	.2327	.1555	[illegible]
.50			.1435	.1656	.1477	.1796	.1389	.1668			.0541	.0641	.1070	[illegible]
.60					.1454	.1742	.0876	.1137	.1131	.1409	.0195	.0253	-.0347	-.0315
.70	.1245	.1649	.1240	.1433	.1348	.1637	.0940	.1033	-.0026	.0098	-.0393	-.0344	-.0560	-.0423
.80	.0132	.0479	.0070	.0215			-.0093	.0053	-.0223	-.0140	-.0372	-.0357	-.0532	-.0531
.90	.0210	.0167	.0187	.0020	.0034	.0010	-.0027	-.0027	-.0124	-.0153	-.0337	-.0324		
.95	.0245	.0240	.0234	.0150			.0060	.0059	-.0038	-.0075	-.0330	-.0337		-.0342

TAIL 1

	Cp at y/b of													
	0.02		0.22		0.44		0.56		0.67		0.83		0.98	
x/c	U.S.	L.S.	U.S.	L.S.	U.S.	L.S.	U.S.	L.S.	U.S.	L.S.	U.S.	L.S.	U.S.	L.S.
.05	-.0646	.2849	-.0224	.8341			.0050	.9283			.0308	1.0674	.0167	.9983
.10	-.0536	.2193					.0039	.9882	.0113	1.0235			.0238	1.0482
.15					-.0148	.9054	-.0072	.9512	-.0001	1.0087			.0220	.9946
.20	-.0553	.2380					-.0131	.9105	-.0078	.9766			.0203	.9415
.25	-.0646	.1519	-.0537	.6302	-.0276	.8354	-.0159	.8794	-.0110	.9313	.0025	.9672	.0190	.9949
.30			-.0613	.3553			-.0194	.8245	-.0127	.8390	-.0034	.9662	.0178	.8611
.40	-.0459	.2532							-.0503	.4674	-.0100	.8438	.0263	.7900
.50					-.0503	.3742	-.0558	.4011	-.0558	.4450	-.0492	.4519	.0195	.6151
.60	-.0499	.2858	-.0533	.3254			-.0642	.3952	-.0554	.4187	-.0599	.3557	-.0607	.1249
.70					-.0537	.3505	-.0606	.2326	-.0524	.1579	-.0611	.1750	-.0583	.0737
.80	-.0554	.1121	-.0647	.1324	-.0570	.1262	-.0625	.1302			-.0607	.1524		
.90	-.0641	.0841	-.0672	.1116	-.0601	.1047	-.0617	.1170	-.0553	.1209	-.0592	.1411	-.0525	.0636
.95			-.0674	.1082	-.0589	.0581	-.0617	.1107	-.0588	.1162	-.0606	.1329	-.0601	.0585

TAIL 2

TABLE XII. - PRESSURE COEFFICIENTS, Φ = 22.5° δ = 0°, M = 3.70
(a) α = -4.20°

	Cp at y/b of													
	0.02		0.22		0.44		0.56		0.67		0.83		0.98	
x/c	U.S.	L.S.	U.S.	L.S.	U.S.	L.S.	U.S.	L.S.	U.S.	L.S.	U.S.	L.S.	U.S.	L.S.
.05			.1963	.0722	.1720	.1565	.1672	.1746		.1229			.1921	.1305
.10	.0241	.0793	.1856	.1148	.1824	.1445		.1982	.1812	.1607	.1746	.1531	.2007	.1638
.15	.0280	.0728	.1733	.1196	.1835	.1468			.1785	.1525			.1834	.1567
.20	.0269	.0568	.1612	.1207	.1823	.1455	.1359	.2309	.1780	.1514	.1808	.1611	.1735	.1485
.25	-.0015	.0115			.1791	.1430	.1756	.1539	.1790	.1496	.1777	.1580	.1613	.1402
.30	-.0004	.0111							.1772	.1473	.1756	.1537	.1496	.1268
.40	.0037	.0100	.0094	.0023	.0309	.0103	.0358	.0147	.0521	.0345	.1700	.1429	.1396	.1166
.50			-.0014	-.0033	.0202	-.0010	.0249	.0019			.0501	.0265	.1251	.0964
.60					.0157	-.0056	.0086	.1614	.0226	.0055	.0157	-.0011	-.0397	-.0467
.70	.0024	.0025	-.0006	-.0053	.0083	-.0096	.0022	-.0120	-.0326	-.0384	-.0413	-.0463	-.0475	-.0497
.80	-.0303	-.0260	-.0409	-.0408			-.0432	-.0439	-.0408	-.0362	-.0484	-.0431	-.0487	-.0461
.90	-.0328	-.0361	-.0431	-.0402	-.0328	-.0237	-.0461	-.0396	-.0443	-.0392	-.0470	-.0409		
.95	-.0353	-.0355	-.0416	-.0389			-.0433	-.0390	-.0420	-.0386	-.0432	-.0405		-.0379

TAIL 1

	Cp at y/b of													
	0.02		0.22		0.44		0.56		0.67		0.83		0.98	
x/c	U.S.	L.S.	U.S.	L.S.	U.S.	L.S.	U.S.	L.S.	U.S.	L.S.	U.S.	L.S.	U.S.	L.S.
.05	.1341	.0241	.2911	.0927			.2686	.0923			.2852	.1475	.2457	.0990
.10	.1516	.0055					.2856	.1047	.2883	.1311			.2700	.0987
.15					.2844	.0927	.2546	.1009	.2892	.1044			.2490	.0891
.20	.1576	.0131					.2856	.0960	.2819	.0981			.2359	.0789
.25	.0475	-.0210	.1482	.0557	.2850	.0870	.2868	.0933	.2853	.0959	.2766	.0954	.2291	.0712
.30			.0844	-.0043			.2793	.0849	.2825	.0928	.2816	.0962	.2211	.0679
.40	.0365	.0009							.1027	.0041	.2599	.0847	.2231	.0605
.50					.0693	.0019	.0687	-.0109	.0733	-.0119	.0920	.0003	.1933	.0397
.60	.0524	-.0154	.0489	-.0132			.0635	-.0198	.0650	-.0157	.0425	-.0207	-.0288	-.0409
.70					.0523	-.0174	.0145	-.0384	-.0297	-.0257	-.0310	-.0403	-.0397	-.0340
.80	-.0198	-.0432	-.0324	-.0384	-.0271	-.0357	-.0347	-.0429			-.0429	-.0390		
.90	-.0352	-.0490	-.0476	-.0424	-.0414	-.0393	-.0430	-.0415	-.0469	-.0363	-.0480	-.0370	-.0423	-.0413
.95			-.0499	-.0436	-.0448	-.0387	-.0458	-.0419	-.0489	-.0372	-.0497	-.0400	-.0490	-.0483

TAIL 2

TABLE XII. - CONTINUED

(b) α = -2.20°

	Cp at y/b of													
	0.02		0.22		0.44		0.56		0.67		0.83		0.98	
x/c	U.S.	L.S.	U.S.	L.S.	U.S.	L.S.	U.S.	L.S.	U.S.	L.S.	U.S.	L.S.	U.S.	L.S.
.05			.1677	.1177	.1563	.1797	.1558	.1999		.1409			.1770	[illegible]
.10	.0486	.0611	.1643	.1560	.1618	.1705		.1922	.1649	.1856	.1623	.1788	.1875	[illegible]
.15	.0504	.0582	.1567	.1581	.1613	.1733			.1616	.1755			.1654	[illegible]
.20	.0461	.0531	.1504	.1519	.1595	.1722	.1530	.1998	.1604	.1735	.1654	.1925	.1567	[illegible]
.25	.0061	.0049			.1565	.1699	.1581	.1761	.1616	.1714	.1627	[illegible]	[illegible]	[illegible]
.30	.0075	.0054							.1591	.1685	.1600	.1763	.123	[illegible]
.40	.0120	.0054	.0104	.0051	.0248	.0227	.0302	.0255	.0423	.0458	.1541	.1655	[illegible]	[illegible]
.50			.0002	-.0052	.0163	.0091	.0179	.0113			.0427	.0370	.1054	.1093
.60					.0126	.0033	.0143	.0843	.0155	.0130	.0110	.0065	-.0430	-.0480
.70	.0090	.0094	-.0016	-.0047	.0062	-.0015	-.0039	-.0120	-.0381	-.0369	-.0462	-.0482	-.0488	-.0506
.80	-.0302	-.0227	-.0449	-.0441			-.0485	-.0493	-.0457	-.0454	-.0523	-.0502	-.0523	-.0514
.90	-.0329	-.0338	-.0422	-.0426	-.0353	-.0323	-.0455	-.0445	-.0458	-.0454	-.0464	-.0440		
.95	-.0360	-.0353	-.0411	-.0415			-.0425	-.0425	-.0434	-.0434	-.0437	-.0428		-.0410

TAIL 1

	Cp at y/b of													
	0.02		0.22		0.44		0.56		0.67		0.83		0.98	
x/c	U.S.	L.S.	U.S.	L.S.	U.S.	L.S.	U.S.	L.S.	U.S.	L.S.	U.S.	L.S.	U.S.	L.S.
.05	.0905	.0504	.2340	.1314			.2232	.1223			.2425	.1356	.2054	.1277
.10	.1041	.0364					.2355	.1425	.2369	.1449			.2238	.1313
.15					.2296	.1310	.2327	.1373	.2366	.1403			.2083	.1201
.20	.1063	.0381					.2325	.1334	.2298	.1349			.1945	.1101
.25	.0304	-.0095	.1098	.0901	.2293	.1260	.2330	.1306	.2321	.1331	.2292	.1313	.1872	.1007
.30			.0553	.0041			.2277	.1213	.2314	.1296	.2334	.1333	.1789	.0942
.40	.0344	-.0011							.0738	.0220	.2231	.1187	.1803	.0849
.50					.0438	-.0035	.0426	-.0033	.0482	.0018	.0654	.0110	.1553	.0577
.60	.0375	-.0089	.0237	-.0195			.0370	-.0101	.0398	-.0036	.0221	-.0190	-.0344	-.0425
.70					.0274	-.0164	-.0047	-.0371	-.0308	-.0409	-.0377	-.0466	-.0422	-.0423
.80	-.0267	-.0385	-.0403	-.0423	-.0362	-.0405	-.0439	-.0451			-.0477	-.0431		
.90	-.0396	-.0485	-.0508	-.0426	-.0477	-.0405	-.0497	-.0421	-.0484	-.0407	-.0499	-.0434	-.0456	-.0368
.95			-.0473	-.0431	-.0462	-.0394	-.0479	-.0418	-.0474	-.0411	-.0481	-.0413	-.0435	-.0434

TAIL 2

TABLE XII - CONTINUED
(c) α = 0.20°

	Cp at y/b of													
	0.02		0.22		0.44		0.56		0.67		0.83		0.98	
x/c	U.S.	L.S.	U.S.	L.S.	U.S.	L.S.	U.S.	L.S.	U.S.	L.S.	U.S.	L.S.	U.S.	L.S.
.05			.1494	.1385	.1431	.2014	.1436	.2209		.1573			.1614	.1578
.10	.0563	.0709	.1468	.1859	.1453	.1914		.2111	.1510	.2086	.1477	.1552	[illegible]	.2002
.15	.0571	.0732	.1390	.1850	.1442	.1951			.1462	.1949			.1454	.1889
.20	.0516	.0686	.1377	.1784	.1422	.1956	.1481	.1951	.1447	.1932	.1511	.2111	.1385	.1813
.25	.0353	.0073			.1405	.1922	.1425	.1376	.1452	.1416	.1433	[illegible]	[illegible]	.1551
.30	.0057	.0100							.1434	.1909	.1455	[illegible]	[illegible]	.1539
.40	.0057	.0085	.0042	.0178	.0159	.0343	.0221	.0341	.0330	.0549	.1394	.1551	.1388	.1397
.50			-.0046	.0046	.0072	.0201	.0095	.0223			.0341	.0389	.0312	.1197
.60					.0039	.0134	.0154	.0372	.0079	.0222	.0045	[illegible]	-.0444	-.0440
.70	.0032	.0140	-.0065	.0009	-.0015	.0075	-.0100	-.0051	-.0412	-.0334	-.0497	-.0455	-.0512	-.0492
.80	-.0327	-.0228	-.0470	-.0451			-.0489	-.0470	-.0470	-.0461	-.0499	-.0526	-.0533	-.0535
.90	-.0361	-.0362	-.0410	-.0445	-.0341	-.0350	-.0430	-.0466	-.0443	-.0431	-.0443	-.0466		
.95	-.0395	-.0375	-.0405	-.0424			-.0413	-.0434	-.0429	-.0457	-.0429	-.0439		-.0443

TAIL 1

	Cp at y/b of													
	0.02		0.22		0.44		0.56		0.67		0.83		0.98	
x/c	U.S.	L.S.	U.S.	L.S.	U.S.	L.S.	U.S.	L.S.	U.S.	L.S.	U.S.	L.S.	U.S.	L.S.
.05	.0607	.0637	.1818	.1775			.1800	.1572			.2014	.1681	.1666	.1596
.10	.0531	.0538					.1860	.1846	.1901	.1826			.1928	.1676
.15					.1800	.1750	.1843	.1799	.1892	.1815			.1655	.1560
.20	.0683	.0618					.1835	.1758	.1823	.1766			.1552	.1468
.25	.0145	.0088	.0730	.1313	.1730	.1725	.1539	.1725	.1838	.1745	.1829	.1734	.1483	.1334
.30			.0235	.0253			.1793	.1607	.1829	.1711	.1865	.1773	.1427	.1252
.40	.0131	.0043							.0484	.0442	.1772	.1597	.1402	.1145
.50					.0218	.0122	.0209	.0152	.0261	.0206	.0417	.0299	[illegible]	.0824
.60	.0233	.0054	.0012	-.0087			.0145	.0094	.0130	.0134	.0037	-.0091	-.0397	-.0423
.70					.0065	-.0009	-.0192	-.0266	-.0390	-.0401	-.0453	-.0485	-.0432	-.0437
.80	-.0302	-.0315	-.0486	-.0471	-.0450	-.0447	-.0514	-.0500			-.0525	-.0463		
.90	-.0419	-.0455	-.0461	-.0428	-.0433	-.0478	-.0462	-.0424	-.0448	-.0408	-.0462	-.0403	-.0421	-.0415
.95			-.0443	-.0423	-.0412	-.0385	-.0434	-.0406	-.0439	-.0405	-.0446	-.0412	-.0442	-.0432

TAIL 2

TABLE XII. - CONTINUED

(a) α = 1.80°

	Cp at y/b of													
	0.02		0.22		0.44		0.56		0.67		0.83		0.98	
x/c	U.S.	L.S.	U.S.	L.S.	U.S.	L.S.	U.S.	L.S.	U.S.	L.S.	U.S.	L.S.	U.S.	L.S.
.05			.1325	.1529	.1316	.2251	.1340	.2455		.1753			.1479	.1856
.10	.0534	.1044	.1300	.2164	.1302	.2145		.2361	.1378	.2307	.1328	.2149	.1577	.2212
.15	.0550	.1090	.1235	.2118	.1284	.2192			.1318	.2195			.1323	.2012
.20	.0483	.1011	.1183	.2047	.1259	.2191	.1382	.2145	.1299	.2145	.1349	.2192	.1191	.1995
.25	-.0019	.0143			.1236	.2161	.1282	.2217	.1302	.2118	.1332	.2202	.1078	.1835
.30	-.0031	.0165							.1284	.2096	.1308	.2180	.0992	.1654
.40	-.0052	.0113	-.0015	.0314	.0072	.0456	.0137	.0438	.0241	.0672	.1245	.2052	.0897	.1556
.50			-.0102	.0174	-.0012	.0315	.0007	.0298			.0250	.0589	.0809	.1330
.60					-.0042	.0246	.0130	.0464	-.0011	.0298	-.0026	.0242	-.0455	-.0407
.70	-.0078	.0167	-.0136	.0114	-.0098	.0172	-.0170	-.0008	-.0457	-.0312	-.0523	-.0419	-.0532	-.0468
.80	-.0331	-.0243	-.0465	-.0401			-.0483	-.0452	-.0453	-.0445	-.0483	-.0515	-.0516	-.0540
.90	-.0420	-.0399	-.0404	-.0466	-.0343	-.0363	-.0430	-.0493	-.0443	-.0511	-.0443	-.0510		
.95	-.0429	-.0403	-.0401	-.0429			-.0425	-.0465	-.0435	-.0483	-.0435	-.0470		-.0459

TAIL 1

	Cp at y/b of													
	0.02		0.22		0.44		0.56		0.67		0.83		0.98	
x/c	U.S.	L.S.	U.S.	L.S.	U.S.	L.S.	U.S.	L.S.	U.S.	L.S.	U.S.	L.S.	U.S.	L.S.
.05	.0407	.0759	.1319	.2291			.1398	.1950			.1625	.2047	.1315	.1942
.10	.0438	.0582					.1442	.2308	.1467	.2246			.1418	.2080
.15					.1339	.2247	.1397	.2267	.1452	.2268			.1315	.1994
.20	.0389	.0748					.1382	.2219	.1383	.2217			.1200	.1858
.25	-.0003	.0228	.0391	.1752	.1321	.2192	.1383	.2191	.1395	.2204	.1409	.2191	.1136	.1717
.30			.0026	.0511			.1341	.2051	.1333	.2164	.1433	.2235	.1067	.1624
.40	.0039	.0129							.0247	.0688	.1358	.2056	.1062	.1491
.50					.0013	.0335	.0009	.0355	.0065	.0424	.0204	.0515	.0880	.1131
.60	.0147	.0208	-.0155	.0068			-.0054	.0303	.0004	.0343	-.0122	.0060	-.0445	-.0387
.70					-.0124	.0201	-.0327	-.0131	-.0448	-.0350	-.0515	-.0439	-.0464	-.0407
.80	-.0286	-.0249	-.0475	-.0454	-.0425	-.0405	-.0474	-.0458			-.0470	-.0481		
.90	-.0397	-.0410	-.0445	-.0465	-.0406	-.0462	-.0432	-.0480	-.0430	-.0449	-.0433	-.0448	-.0399	-.0431
.95			-.0444	-.0441	-.0398	-.0414	-.0425	-.0450	-.0433	-.0427	-.0433	-.0431	-.0442	-.0461

TAIL 2

TABLE XII. - CONTINUED

(e) α = 3.30°

	Cp at y/b of													
	0.02		0.22		0.44		0.56		0.67		0.83		0.98	
x/c	U.S.	L.S.	U.S.	L.S.	U.S.	L.S.	U.S.	L.S.	U.S.	L.S.	U.S.	L.S.	U.S.	L.S.
.05			.1182	.1735	.1218	.2517	.1228	.2713		.1959			.1515	.2067
.10	.0440	.1419	.1143	.2507	.1181	.2407		.2616	.1267	.2563	.1235	.2416	.1511	.2473
.15	.0447	.1485	.1079	.2424	.1157	.2449			.1204	.2429			.1197	.2249
.20	.0390	.1387	.1034	.2369	.1122	.2437	.1255	.2393	.1175	.2384	.1248	.2462	.1094	.2134
.25	-.0094	.0273			.1099	.2438	.1143	.2460	.1174	.2356	.1234	.2463	.0982	.2054
.30	-.0118	.0274							.1155	.2338	.1209	.2433	.0916	.1902
.40	-.0147	.0249	-.0080	.0470	-.0007	.0565	.0068	.0561	.0157	.0776	.1146	.2304	.0860	.1749
.50			-.0166	.0309	-.0095	.0425	-.0061	.0416			.0205	.0737	.0764	.1513
.60					-.0127	.0354	.0035	.0461	-.0075	.0399	-.0082	.0369	-.0444	-.0343
.70	-.0182	.0251	-.0202	.0233	-.0179	.0271	-.0228	.0072	-.0480	-.0275	-.0545	-.0372	-.0523	-.0426
.80	-.0452	-.0217	-.0440	-.0342			-.0468	-.0421	-.0447	-.0419	-.0486	-.0483	-.0452	-.0527
.90	-.0421	-.0384	-.0404	-.0445	-.0348	-.0364	-.0434	-.0460	-.0446	-.0497	-.0455	-.0515		
.95	-.0421	-.0392	-.0405	-.0440			-.0432	-.0477	-.0444	-.0493	-.0448	-.0498		-.0406

TAIL 1

	Cp at y/b of													
	0.02		0.22		0.44		0.56		0.67		0.83		0.98	
x/c	U.S.	L.S.	U.S.	L.S.	U.S.	L.S.	U.S.	L.S.	U.S.	L.S.	U.S.	L.S.	U.S.	L.S.
.05	.0251	.0739	.0875	.2832			.1024	.2360			.1263	.2417	.0986	.2306
.10	.0255	.0704					.1037	.2795	.1076	.2713			.1061	.2514
.15					.0909	.2780	.0987	.2764	.1046	.2751			.0970	.2421
.20	.0190	.0829					.0965	.2727	.0984	.2710			.0871	.2273
.25	-.0108	.0318	.0120	.2135	.0883	.2701	.0961	.2689	.0984	.2704	.1019	.2564	.0810	.2107
.30			-.0188	.0753			.0926	.2527	.0974	.2643	.1030	.2703	.0756	.2021
.40	-.0040	.0234							.0038	.0956	.0963	.2499	.0744	.1923
.50					-.0146	.0592	-.0158	.0627	-.0111	.0682	.0007	.0718	.0591	.1449
.60	.0058	.0367	-.0245	.0303			-.0226	.0563	-.0154	.0598	-.0262	.0220	-.0479	-.0324
.70					-.0275	.0430	-.0431	.0039	-.0466	-.0260	-.0477	-.0350	-.0436	-.0373
.80	-.0279	-.0139	-.0478	-.0384	-.0394	-.0319	-.0436	-.0358			-.0445	-.0415		
.90	-.0368	-.0333	-.0461	-.0482	-.0405	-.0428	-.0422	-.0421	-.0427	-.0421	-.0424	-.0426	-.0397	-.0381
.95			-.0455	-.0474	-.0402	-.0430	-.0420	-.0435	-.0429	-.0426	-.0431	-.0438	-.0441	-.0431

TAIL 2

TABLE XII. - CONTINUED

(l) α = 5.50°

	Cp at y/b of													
	0.02		0.22		0.44		0.56		0.67		0.83		0.98	
x/c	U.S.	L.S.	U.S.	L.S.	U.S.	L.S.	U.S.	L.S.	U.S.	L.S.	U.S.	L.S.	U.S.	L.S.
.05			.1125	.2004	.1201	.2946	.1216	.3060		.2136			[illegible]	[illegible]
.10	.0371	.1807	.1073	.2913	.1154	[illegible]		.2929	.1257	.2835	[illegible]	[illegible]	[illegible]	[illegible]
.15	.0344	.1903	.1001	.2799	.1117	[illegible]			.1136	.2753			[illegible]	.2565
.20	.0235	.1781	.0950	.2751	.1075	[illegible]	.1134	.2635	.1162	.2704	[illegible]	[illegible]	[illegible]	[illegible]
.25	-.0146	.0427			.1051	.2779	.1115	.2776	.1155	.2637	.1223	.2822	[illegible]	[illegible]
.30	-.0173	.0413							.1130	.2569	[illegible]	[illegible]	.0329	[illegible]
.40	-.0215	.0419	-.0123	.0522	-.0042	[illegible]	.0045	[illegible]	[illegible]	[illegible]	[illegible]	[illegible]	[illegible]	[illegible]
.50			-.0213	.0450	-.0134	.0570	-.0089	.0558			.0200	.0919	.0819	[illegible]
.60					-.0166	.0502	.0065	.0506	-.0103	.0539	-.0089	[illegible]	[illegible]	[illegible]
.70	-.0246	.0383	-.0249	.0353	-.0220	.0416	-.0265	.0170	-.0507	-.0211	-.0550	[illegible]	[illegible]	[illegible]
.80	-.0460	-.0166	-.0424	-.0279			-.0451	-.0368	-.0436	-.0388	-.0425	-.0443	-.0563	[illegible]
.90	-.0405	-.0349	-.0402	-.0412	-.0344	-.0326	[illegible]	-.0435	-.0443	-.0465	[illegible]	[illegible]		
.95	-.0408	-.0363	-.0402	-.0433			-.0439	-.0459	-.0440	-.0477	-.0463	[illegible]		-.0334

TAIL 1

	Cp at y/b of													
	0.02		0.22		0.44		0.56		0.67		0.83		0.98	
x/c	U.S.	L.S.	U.S.	L.S.	U.S.	L.S.	U.S.	L.S.	U.S.	L.S.	U.S.	L.S.	U.S.	L.S.
.05	.0143	.0585	.0487	.3354			.0661	.2803			.0953	.2893	.0690	.2730
.10	.0159	.0585					.0643	.3327	.0708	.3230			.0733	.3014
.15					.0514	.3318	.0583	.3323	.0665	.3292			.0557	.2902
.20	.0112	.0745					.0570	.3279	.0602	.3255			.0510	.2731
.25	-.0136	.0309	-.0100	.2469	.0469	.3218	.0563	.3227	.0595	.3224	.0661	.3157	.0520	.2571
.30			-.0340	.0961			.0532	.3034	.0584	.3152	.0655	.3203	.0476	.2476
.40	-.0083	.0344							-.0155	.1258	.0595	.3031	.0462	.2332
.50					-.0256	.0869	-.0239	.0935	-.0268	.0992	-.0164	.0928	.0328	.1941
.60	-.0065	.0512	-.0319	.0536			-.0372	.0676	-.0299	.0911	-.0377	.0457	-.0500	-.0236
.70					-.0384	.0566	-.0487	.0234	-.0447	-.0142	-.0478	-.0229	-.0439	-.0357
.80	-.0343	-.0067	-.0517	-.0266	-.0421	-.0223	-.0461	-.0237			-.0462	-.0315		
.90	-.0435	-.0278	-.0501	-.0409	-.0439	-.0350	-.0447	-.0322	-.0443	-.0344	-.0447	-.0352	-.0412	-.0379
.95			-.0495	-.0443	-.0436	-.0378	-.0446	-.0354	-.0447	-.0352	-.0456	-.0376	-.0461	-.0430

TAIL 2

TABLE XII. - CONTINUED
(g) α = 7.30°

	Cp at y/b of													
	0.02		0.22		0.44		0.56		0.67		0.83		0.98	
x/c	U.S.	L.S.	U.S.	L.S.	U.S.	L.S.	U.S.	L.S.	U.S.	L.S.	U.S.	L.S.	U.S.	L.S.
.05			.1216	.2361	.1298	.3285	.1320	.3524		.2537			.1556	.2739
.10	.0416	.2219	.1156	.3398	.1237	.3176		.3318	.1357	.3342	.1294	.3222	.1563	.3133
.15	.0367	.2353	.1076	.3290	.1196	.3224			.1281	.3184			.1222	.2913
.20	.0310	.2211	.1016	.3237	.1150	.3245	.1234	.2978	.1225	.3128	.1304	.3252	.1108	[illegible]
.25	-.0134	.0627			.1125	.3225	.1236	.3207	.1216	.3116	.1286	.3255	.1018	.2533
.30	-.0161	.0614							.1163	.3089	.1257	.3227	.0991	.2556
.40	-.0221	.0647	-.0110	.0862	-.0021	.0908	.0084	.0933	.0090	.1205	.1199	.3091	.0980	.2363
.50			-.0207	.0656	-.0120	.0770	-.0062	.0761			.0224	.1155	.0912	.2121
.60					-.0156	.0705	.0064	.0611	-.0167	.0746	-.0074	.0706	-.0363	-.0189
.70	-.0260	.0577	-.0243	.0546	-.0214	.0617	-.0254	.0343	-.0531	-.0114	-.0538	-.0234	-.0407	-.0302
.80	-.0425	-.0077	-.0402	-.0184			-.0442	-.0282	-.0419	-.0338	-.0465	-.0381	-.0613	[illegible]
.90	-.0380	-.0280	-.0384	-.0344	-.0340	-.0281	-.0421	-.0364	-.0426	-.0409	-.0440	-.0436		
.95	-.0382	-.0293	-.0387	-.0377			-.0427	-.0391	-.0424	-.0430	-.0436	-.0455		-.0401

TAIL 1

	Cp at y/b of													
	0.02		0.22		0.44		0.56		0.67		0.83		0.98	
x/c	U.S.	L.S.	U.S.	L.S.	U.S.	L.S.	U.S.	L.S.	U.S.	L.S.	U.S.	L.S.	U.S.	L.S.
.05	.0122	.0399	.0171	.3738			.0327	.3253			.0671	.3338	.0402	.3180
.10	.0135	.0411					.0299	.3831	.0371	.3766			.0427	.3530
.15					.0174	.3841	.0252	.3877	.0314	.3843			.0361	.3391
.20	.0097	.0562					.0220	.3810	.0253	.3814			.0298	.3211
.25	-.0209	.0215	-.0258	.2717	.0111	.3693	.0211	.3749	.0242	.3772	.0333	.3631	.0262	.3046
.30			-.0433	.1145			.0180	.3520	.0230	.3631	.0314	.3728	.0233	.3004
.40	-.0141	.0425							-.0320	.1635	.0254	.3627	.0222	.2834
.50					-.0366	.1094	-.0419	.1220	-.0405	.1334	-.0309	.1242	.0105	.2253
.60	-.0132	.0528	-.0382	.0715			-.0491	.1145	-.0418	.1240	-.0470	.0802	-.0508	-.0032
.70					-.0434	.0863	-.0499	.0409	-.0445	.0026	-.0499	-.0061	-.0450	-.0299
.80	-.0400	-.0081	-.0548	-.0125	-.0450	-.0130	-.0495	-.0135			-.0487	-.0146		
.90	-.0499	-.0286	-.0532	-.0313	-.0471	-.0265	-.0487	-.0228	-.0472	-.0238	-.0476	-.0196	-.0429	-.0363
.95			-.0532	-.0368	-.0467	-.0298	-.0486	-.0271	-.0476	-.0263	-.0485	-.0221	-.0481	-.0433

TAIL 2

TABLE XII. - CONTINUED

(h) α = 9.90°

	Cp at y/b of													
	0.02		0.22		0.44		0.56		0.67		0.83		0.98	
x/c	U.S.	L.S.	U.S.	L.S.	U.S.	L.S.	U.S.	L.S.	U.S.	L.S.	U.S.	L.S.	U.S.	L.S.
.05			.1384	.2746	.1442	.3802	.1391	.4079		.2976			[illegible]	.3179
.10	.0538	.2568	.1314	.3974	.1398	.3705		.3935	.1449	.3869	.1409	.3712	[illegible]	.3642
.15	.0474	.2856	.1229	.3885	.1338	.3757			.1370	.3635			.1306	.3351
.20	.0407	.2670	.1160	.3814	.1289	.3789	.1252	.3645	.1321	.3630	.1421	.3774	[illegible]	.3133
.25	-.0067	.0881			.1262	.3762	.1310	.3736	.1319	.3627	.1398	.3784	.1136	.3020
.30	-.0095	.0860							.1279	.3538	.1381	.3740	[illegible]	.2950
.40	-.0168	.0937	-.0055	.1136	.0023	.1171	.0085	.1189	.0152	.1484	.1310	.3563	[illegible]	.2790
.50			-.0152	.0920	-.0082	.1038	-.0070	.1020			.0284	.1433	.1050	.2534
.60					-.0122	.0964	-.0003	.0852	-.0124	.0987	-.0022	.0937	-.0338	-.0076
.70	-.0224	.0845	-.0194	.0775	-.0168	.0881	-.0295	.0552	-.0566	-.0001	-.0482	-.0127	-.0390	-.0228
.80	-.0367	.0048	-.0343	-.0063			-.0458	-.0169	-.0371	-.0240	-.0404	-.0292	-.0553	-.0287
.90	-.0324	-.0179	-.0328	-.0258	-.0347	-.0193	-.0448	-.0262	-.0373	-.0309	-.0386	-.0359		
.95	-.0331	-.0182	-.0327	-.0298			-.0450	-.0299	-.0373	-.0335	-.0382	-.0386		-.0343

TAIL 1

	Cp at y/b of													
	0.02		0.22		0.44		0.56		0.67		0.83		0.98	
x/c	U.S.	L.S.	U.S.	L.S.	U.S.	L.S.	U.S.	L.S.	U.S.	L.S.	U.S.	L.S.	U.S.	L.S.
.05	.0154	.0247	-.0116	.2916			.0010	.3760			.0289	.3817	.0115	.3582
.10	.0164	.0282					-.0025	.4382	.0052	.4324			.0124	.4020
.15					-.0104	.4269	-.0067	.4417	-.0012	.4415			.0076	.3873
.20	.0082	.0426					-.0072	.4330	-.0065	.4383			.0043	.3705
.25	-.0284	.0137	-.0377	.2852	-.0139	.4003	-.0054	.4232	-.0066	.4376	.0022	.4237	.0033	.3602
.30			-.0473	.1304			-.0067	.3965	-.0059	.4251	-.0013	.4455	.0030	.3518
.40	-.0229	.0456							-.0434	.1979	-.0064	.3907	.0033	.3336
.50					-.0452	.1281	-.0505	.1452	-.0495	.1663	-.0453	.1740	-.0077	.2656
.60	-.0223	.0452	-.0437	.0897			-.0576	.1368	-.0495	.1563	-.0556	.1233	-.0557	.0082
.70					-.0485	.1050	-.0545	.0535	-.0478	.0190	-.0549	.0188	-.0432	-.0196
.80	-.0470	-.0092	-.0594	-.0000	-.0518	-.0030	-.0558	-.0018			-.0541	.0051		
.90	-.0565	-.0289	-.0587	-.0240	-.0538	-.0163	-.0551	-.0116	-.0530	-.0118	-.0528	-.0022	-.0497	-.0288
.95			-.0588	-.0304	-.0538	-.0199	-.0550	-.0155	-.0536	-.0140	-.0533	-.0057	-.0557	-.0355

TAIL 2

TABLE XII. - CONTINUED

(i) α = 11.80°

	Cp at y/b of													
	0.02		0.22		0.44		0.56		0.67		0.83		0.98	
x/c	U.S.	L.S.	U.S.	L.S.	U.S.	L.S.	U.S.	L.S.	U.S.	L.S.	U.S.	L.S.	U.S.	L.S.
.05			.1596	.3382	.1636	.4424	.1520	.4733		.3494			.1879	.3686
.10	.0679	.3154	.1524	.4662	.1579	.4335		.4494	.1619	.4497	.1551	.4298	.1764	.4167
.15	.0610	.3435	.1430	.4586	.1522	.4403			.1535	.4302			.1409	.3854
.20	.0527	.3206	.1352	.4507	.1468	.4441	.1354	.4059	.1487	.4234	.1571	.4372	.1335	.3687
.25	.0007	.1158			.1440	.4408	.1490	.4352	.1478	.4223	.1548	.4386	.1281	.3500
.30	-.0020	.1140							.1446	.4193	.1527	.4348	.1277	.3392
.40	-.0107	.1253	.0005	.1460	.0085	.1487	.0179	.1503	.0233	.1810	.1458	.4159	.1270	.3332
.50			-.0097	.1211	-.0036	.1344	.0012	.1323			.0350	.1742	.1221	.2991
.60					-.0081	.1271	.0037	.1021	-.0048	.1278	.0025	.1200	-.0285	.0058
.70	-.0185	.1142	-.0144	.1059	-.0142	.1191	-.0214	.0792	-.0509	.0139	-.0416	-.0018	-.0362	-.0122
.80	-.0324	.0187	-.0291	.0071			-.0362	-.0053	-.0328	-.0161	-.0351	-.0201	-.0578	-.0182
.90	-.0276	-.0065	-.0275	-.0142	-.0299	-.0103	-.0370	-.0163	-.0324	-.0221	-.0336	-.0281		
.95	-.0287	-.0058	-.0274	-.0195			-.0375	-.0200	-.0325	-.0250	-.0334	-.0312		-.0293

TAIL 1

	Cp at y/b of													
	0.02		0.22		0.44		0.56		0.67		0.83		0.98	
x/c	U.S.	L.S.	U.S.	L.S.	U.S.	L.S.	U.S.	L.S.	U.S.	L.S.	U.S.	L.S.	U.S.	L.S.
.05	.0046	.0177	-.0224	.4102			-.0168	.4231			.0104	.4392	-.0100	.4033
.10	.0076	.0180					-.0202	.4876	-.0133	.4809			-.0102	.4555
.15					-.0258	.4546	-.0239	.4837	-.0211	.4911			-.0138	.4415
.20	-.0010	.0325					-.0268	.4669	-.0261	.4872			-.0157	.4328
.25	-.0344	.0065	-.0439	.3003	-.0353	.4182	-.0282	.4495	-.0282	.4806	-.0185	.4774	-.0163	.4202
.30			-.0515	.1477			-.0294	.4179	-.0283	.4622	-.0225	.4748	-.0163	.4147
.40	-.0266	.0437							-.0547	.2152	-.0264	.4396	-.0163	.3967
.50					-.0467	.1433	-.0552	.1627	-.0575	.1881	-.0530	.2158	-.0238	.3176
.60	-.0273	.0411	-.0479	.1097			-.0592	.1546	-.0525	.1791	-.0592	.1529	-.0604	.0268
.70					-.0507	.1213	-.0573	.0654	-.0494	.0283	-.0577	.0388	-.0526	-.0071
.80	-.0496	-.0088	-.0618	.0052	-.0542	.0056	-.0599	.0076			-.0577	.0207		
.90	-.0596	-.0285	-.0624	-.0182	-.0572	-.0071	-.0592	-.0015	-.0559	-.0005	-.0562	.0128	-.0523	-.0155
.95			-.0622	-.0236	-.0565	-.0116	-.0592	-.0057	-.0566	-.0036	-.0575	.0087	-.0583	-.0207

TAIL 2

TABLE XII. - CONTINUED

(j) α = 15.80°

	Cp at y/b of													
	0.02		0.22		0.44		0.56		0.67		0.83		0.98	
x/c	U.S.	L.S.	U.S.	L.S.	U.S.	L.S.	U.S.	L.S.	U.S.	L.S.	U.S.	L.S.	U.S.	L.S.
.05			.2160	.4969	.2131	.5381	.1894	.6308		.4753			.2229	.4779
.10	.1071	.4348	.2078	.6484	.2076	.5886		.6006	.2101	.5985	.1919	.5702	.1937	.5111
.15	.1000	.4854	.1966	.6297	.2009	.6010			.1999	.5733			.1589	.4632
.20	.0890	.4528	.1965	.6192	.1950	.6059	.1608	.5227	.1952	.5677	.1948	.5826	.1600	.4548
.25	.0233	.1981			.1919	.6014	.1920	.5895	.1935	.5723	.1920	.5875	.1614	.4371
.30	.0212	.1863							.1894	.5710	.1898	.5795	.1650	.4261
.40	.0103	.2086	.0199	.2261	.0287	.2298	.0406	.2312	.0484	.2598	.1823	.5645	.1650	.4194
.50			.0074	.1948	.0175	.2146	.0220	.2095			.0527	.2497	.1602	.3797
.60					.0117	.2071	.0142	.1448	.0166	.2010	.0171	.1814	-.0176	.0313
.70	-.0047	.1913	.0022	.1754	.0054	.2003	-.0025	.1449	-.0333	.0521	-.0238	.0257	-.0347	.0048
.80	-.0224	.0572	-.0131	.0433			-.0170	.0310	-.0215	.0076	-.0199	.0021	-.0539	.0171
.90	-.0144	.0243	-.0119	.0149	-.0189	.0146	-.0166	.0158	-.0193	.0049	-.0193	-.0084		
.95	-.0158	.0297	-.0119	.0094			-.0166	.0104	-.0192	.0009	-.0195	-.0128		-.0027

TAIL 1

	Cp at y/b of													
	0.02		0.22		0.44		0.56		0.67		0.83		0.98	
x/c	U.S.	L.S.	U.S.	L.S.	U.S.	L.S.	U.S.	L.S.	U.S.	L.S.	U.S.	L.S.	U.S.	L.S.
.05	-.0261	.0056	-.0360	.4433			-.0352	.5561			-.0040	.6266	-.0214	.5794
.10	-.0191	.0024					-.0392	.5838	-.0292	.6040			-.0198	.6379
.15					-.0417	.5091	-.0422	.5590	-.0389	.6009			-.0224	.6176
.20	-.0256	.0186					-.0459	.5331	-.0439	.5791			-.0239	.5918
.25	-.0465	.0054	-.0524	.3418	-.0538	.4696	-.0475	.5141	-.0465	.5607	-.0305	.5846	-.0254	.5649
.30			-.0576	.1825			-.0485	.4733	-.0466	.5343	-.0366	.5850	-.0262	.5410
.40	-.0334	.0453							-.0631	.2604	-.0410	.5070	-.0286	.5029
.50					-.0490	.1946	-.0575	.2121	-.0617	.2400	-.0595	.2594	-.0353	.4021
.60	-.0375	.0591	-.0520	.1680			-.0635	.2060	-.0569	.2303	-.0636	.1903	-.0657	.0446
.70					-.0551	.1696	-.0628	.1008	-.0532	.0583	-.0628	.0651	-.0572	.0147
.80	-.0534	-.0035	-.0660	.0319	-.0536	.0359	-.0656	.0379			-.0628	.0516		
.90	-.0634	-.0179	-.0669	.0067	-.0629	.0227	-.0650	.0272	-.0603	.0277	-.0613	.0443	-.0555	.0136
.95			-.0670	-.0002	-.0620	.0180	-.0649	.0223	-.0616	.0241	-.0627	.0396	-.0624	.0112

TAIL 2

TABLE XIII. - CONCLUDED

(k) α = 19.30°

	Cp at y/b of													
	0.02		0.22		0.44		0.56		0.67		0.83		0.98	
x/c	U.S.	L.S.	U.S.	L.S.	U.S.	L.S.	U.S.	L.S.	U.S.	L.S.	U.S.	L.S.	U.S.	L.S.
.05			.2834	.7104	.2734	.7855	.2384	.8237		.6402			.1085	.3601
.10	.1605	.5827	.2756	.8670	.2682	.7903		.8043	.2536	.7976	.0873	.4391	.0649	.4096
.15	.1512	.6612	.2622	.8435	.2603	.8052			.2488	.7537			.0519	.3874
.20	.1374	.6176	.2504	.8273	.2541	.8112	.2077	.7051	.2426	.7576	.0796	.4979	.0526	.3598
.25	.0550	.2792			.2502	.8061	.2470	.7928	.2391	.7514	.0803	.5062	.0518	.3865
.30	.0546	.2777							.2305	.7426	.0876	.5275	.0502	.3821
.40	.0436	.3123	.0481	.3233	.0531	.3302	.0659	.3313	.0685	.3424	.0815	.5250	.0479	.3829
.50			.0334	.2945	.0486	.3178	.0458	.3087			.0160	.2283	.0375	.3615
.60					.0425	.3131	.0222	.2188	.0294	.2604	-.0085	.1626	-.0537	.0033
.70	.0180	.2874	.0258	.2617	.0328	.3090	.0140	.2289	-.0372	.0880	-.0416	.0301	-.0536	-.0109
.80	-.0216	.1113	-.0024	.0946			-.0177	.0743	-.0179	.0463	-.0397	.0114	-.0607	-.0047
.90	-.0055	.0730	-.0012	.0608	-.0073	.0598	-.0146	.0532	-.0176	.0439	-.0238	.0034		
.95	-.0044	.0847	-.0016	.0560			-.0143	.0465	-.0179	.0393	-.0268	-.0016		-.0378

TAIL 1

	Cp at y/b of													
	0.02		0.22		0.44		0.56		0.67		0.83		0.98	
x/c	U.S.	L.S.	U.S.	L.S.	U.S.	L.S.	U.S.	L.S.	U.S.	L.S.	U.S.	L.S.	U.S.	L.S.
.05	-.0498	.0019	-.0439	.5362			-.0386	.7214			-.0103	.9023	-.0263	.8351
.10	-.0377	.0036					-.0417	.7039	-.0317	.7258			-.0202	.7948
.15					-.0437	.6079	-.0453	.6691	-.0408	.7131			-.0217	.7618
.20	-.0399	.0411					-.0490	.6389	-.0457	.6898			-.0254	.7214
.25	-.0546	.0243	-.0567	.4181	-.0571	.5683	-.0506	.6139	-.0481	.6640	-.0321	.6984	-.0286	.6839
.30			-.0605	.2483			-.0520	.5647	-.0486	.6381	-.0392	.6834	-.0318	.6510
.40	-.0388	.0575							-.0644	.3110	-.0443	.5895	-.0336	.6145
.50					-.0509	.2613	-.0597	.2799	-.0643	.3079	-.0616	.3120	-.0400	.4717
.60	-.0444	.0935	-.0536	.2424			-.0659	.2732	-.0594	.3037	-.0653	.2475	-.0666	.0753
.70					-.0578	.2349	-.0653	.1458	-.0550	.1014	-.0650	.1033	-.0530	.0637
.80	-.0553	.0138	-.0638	.0666	-.0529	.0737	-.0684	.0748			-.0647	.0909		
.90	-.0658	.0015	-.0635	.0503	-.0658	.0595	-.0673	.0641	-.0614	.0671	-.0636	.0830	-.0568	.0517
.95			-.0700	.0425	-.0648	.0537	-.0670	.0582	-.0638	.0642	-.0644	.0770	-.0645	.0463

TAIL 2

TABLE XIII. - PRESSURE COEFFICIENTS, $\Phi = 45°$, $\delta = 0°$, $M = 3.70$

(a) $\alpha = -4.30°$

	Cp at y/b of													
	0.02		0.22		0.44		0.56		0.67		0.83		0.98	
x/c	U.S.	L.S.	U.S.	L.S.	U.S.	L.S.	U.S.	L.S.	U.S.	L.S.	U.S.	L.S.	U.S.	L.S.
.05			.2315	.0668	.2047	.1346	.1976	.1455		.1003			[illegible]	[illegible]
.10	[illegible]	.0436	.2257	.0327	.2171	.1146		.2027	.2160	.1348	.2127	.1385	[illegible]	[illegible]
.15	[illegible]	.0405	.2141	.0877	.2188	.1156			.2142	.1251			[illegible]	[illegible]
.20	[illegible]	.0366	.2045	.0880	.2178	.1150	.1531	.3294	.2138	.1226	.2165	.1344	[illegible]	[illegible]
.25	[illegible]	.0039			.2142	.1131	.2108	.1276	.2151	.1213	.2132	.1314	[illegible]	[illegible]
.30	[illegible]	.0025							.2128	.1183	.2114	.1273	[illegible]	[illegible]
.40	.0216	.0048	.0358	-.0117	.0561	.0041	.0598	.0041	.0721	.0199	.2050	.1173	[illegible]	.0886
.50			.0245	-.0116	.0472	-.0063	.0477	-.0069			.0628	.0145	[illegible]	[illegible]
.60					.0413	-.0111	.0136	.1858	.0437	-.0054	.0372	-.0095	-.0334	-.0475
.70	.0157	-.0007	.0175	-.0140	.0330	-.0159	.0221	-.0174	-.0235	-.0424	-.0363	-.0452	-.0456	-.0490
.80	-.0259	-.0232	-.0354	-.0428			-.0387	-.0397	-.0420	-.0316	-.0462	-.0419	-.0477	-.0458
.90	-.0289	-.0320	-.0466	-.0413	-.0377	-.0225	-.0453	-.0387	-.0484	-.0382	-.0494	-.0407		
.95	-.0312	-.0331	-.0464	-.0399			-.0465	-.0384	-.0482	-.0375	-.0488	-.0401		-.0398

TAIL 1

	Cp at y/b of													
	0.02		0.22		0.44		0.56		0.67		0.83		0.98	
x/c	U.S.	L.S.	U.S.	L.S.	U.S.	L.S.	U.S.	L.S.	U.S.	L.S.	U.S.	L.S.	U.S.	L.S.
.05	.1361	.0449	.2697	.1131			.2501	.1100			.2626	.1313	.2281	.1186
.10	.1486	.0298					.2556	.1256	.2580	.1342			.2493	.1195
.15					.2636	.1142	.2640	.1207	.2681	.1255			.2300	.1091
.20	.1547	.0291					.2556	.1169	.2620	.1202			.2169	.0978
.25	.0396	-.0178	.1313	.0732	.2644	.1087	.2663	.1145	.2640	.1184	.2565	.1162	.2106	.0889
.30			.0745	-.0045			.2608	.1050	.2519	.1151	.2617	.1180	.2060	.0859
.40	.0133	-.0098							.0891	.0136	.2507	.1052	.2007	.0778
.50					.0535	-.0086	.0567	-.0092	.0612	-.0056	.0803	.0037	.1776	.0528
.60	.0359	-.0221	.0361	-.0284			.0512	-.0171	.0530	-.0103	.0323	-.0237	-.0339	-.0423
.70					.0366	-.0219	.0027	-.0408	-.0394	-.0429	-.0382	-.0497	-.0431	-.0412
.80	-.0277	-.0476	-.0387	-.0447	-.0350	-.0423	-.0417	-.0456			-.0485	-.0454		
.90	-.0419	-.0464	-.0507	-.0448	-.0449	-.0419	-.0479	-.0435	-.0497	-.0431	-.0509	-.0436	-.0463	-.0537
.95			-.0502	-.0451	-.0467	-.0416	-.0487	-.0432	-.0509	-.0440	-.0510	-.0442	-.0472	-.0597

TAIL 2

TABLE XIII. - CONTINUED

(b) α = -2.30°

	Cp at y/b of													
	0.02		0.22		0.44		0.56		0.67		0.83		0.98	
x/c	U.S.	L.S.	U.S.	L.S.	U.S.	L.S.	U.S.	L.S.	U.S.	L.S.	U.S.	L.S.	U.S.	L.S.
.05			.1895	.1042	.1738	.1658	.1701	.1868		.1276			.1909	.1360
.10	.0586	.0543	.1369	.1390	.1806	.1535		.1748	.1834	.1719	.1901	.1630	.2038	.1576
.15	.0606	.0509	.1732	.1333	.1810	.1530			.1803	.1600			.1827	[illegible]
.20	.0565	.0455	.1725	.1330	.1793	.1555	.1754	.1933	.1791	.1570	.1840	.1673	.1725	.1499
.25	.0121	.0000			.1754	.1532	.1769	.1612	.1801	.1554	.1808	.1649	.1561	.1374
.30	.0140	-.0002							.1779	.1524	.1795	.1512	.1437	[illegible]
.40	.0012	-.0009	.1011	-.0040	.0353	.0146	.0405	.0144	.0529	.0358	.1700	.1509	.1348	.1128
.50			[illegible]	-.0125	.0255	.0016	.0275	.0005			.0526	.0284	.1133	.0954
.60					.0227	-.0044	.0217	.0949	.0243	.0016	.0194	-.0007	-.0403	-.0479
.70	.0145	.0002	.0057	-.0113	.0161	-.0100	.0051	-.0201	-.0332	-.0448	-.0424	-.0501	-.0467	-.0522
.80	-.0298	-.0256	-.0427	-.0472			-.0453	-.0526	-.0455	-.0439	-.0515	-.0468	-.0513	-.0516
.90	-.0321	-.0356	-.0446	-.0436	-.0378	-.0325	-.0480	-.0474	-.0490	-.0442	-.0487	-.0438		
.95	-.0346	-.0377	-.0427	-.0427			-.0445	-.0458	-.0460	-.0431	-.0456	-.0435		-.0406

TAIL 1

	Cp at y/b of													
	0.02		0.22		0.44		0.56		0.67		0.83		0.98	
x/c	U.S.	L.S.	U.S.	L.S.	U.S.	L.S.	U.S.	L.S.	U.S.	L.S.	U.S.	L.S.	U.S.	L.S.
.05	.0923	.0636	.2031	.1435			.2145	.1331			.2350	.1444	.1961	.1380
.10	.1044	.0470					.2259	.1542	.2273	.1560			.2139	.1411
.15					.2200	.1441	.2229	.1492	.2268	.1524			.1983	.1296
.20	.1054	.0485					.2233	.1451	.2205	.1471			.1847	.1191
.25	.0273	-.0052	.1019	.1020	.2199	.1387	.2233	.1429	.2225	.1455	.2184	.1424	.1783	.1100
.30			.0510	.0096			.2185	.1329	.2211	.1422	.2227	.1450	.1722	.1035
.40	.0263	-.0058							.0672	.0281	.2130	.1303	.1695	.0942
.50					.0392	-.0004	.0375	.0012	.0425	.0071	.0600	.0160	.1473	.0652
.60	.0320	-.0124	.0188	-.0208			.0316	-.0056	.0348	.0006	.0167	-.0163	-.0361	-.0400
.70					.0226	-.0129	-.0098	-.0351	-.0338	-.0438	-.0402	-.0514	-.0419	[illegible]
.80	-.0300	-.0415	-.0424	-.0443	-.0384	-.0424	-.0462	-.0464			-.0503	-.0456		
.90	-.0430	-.0466	-.0504	-.0427	-.0488	-.0409	-.0507	-.0421	-.0494	-.0419	-.0507	-.0427	-.0466	-.0360
.95			-.0466	-.0428	-.0457	-.0399	-.0468	-.0417	-.0478	-.0427	-.0479	-.0429	-.0467	-.0465

TAIL 2

TABLE XIII. - CONTINUED

(c) α = -0.30°

	Cp at y/b of													
	0.02		0.22		0.44		0.56		0.67		0.83		0.98	
x/c	U.S.	L.S.	U.S.	L.S.	U.S.	L.S.	U.S.	L.S.	U.S.	L.S.	U.S.	L.S.	U.S.	L.S.
.05			.1515	.1371	.1463	.2014	.1458	.2215		.1580			[illegible]	[illegible]
.10	.0590	.0699	.1492	.1833	.1478	.1913		.2048	.1532	.2034	.1515	.1952	[illegible]	[illegible]
.15	.0596	.0719	.1418	.1937	.1468	.1952			.1492	.1974			[illegible]	[illegible]
.20	.0540	.0672	.1365	.1772	.1445	.1957	.1611	.1907	.1476	.1935	.1540	.2025	.1408	[illegible]
.25	.0070	.0060			.1421	.1923	.1452	.1951	[illegible]	.1923	.1509	.1995	[illegible]	[illegible]
.30	.0072	.0079							[illegible]	.1867	.1482	.1966	[illegible]	[illegible]
.40	.0086	.0053	.0063	.0145	.0176	.0317	.0233	.0334	.0341	.0537	.1413	.1860	[illegible]	.1332
.50			-.0026	.0015	.0083	.0171	.0105	.0130			.0357	.0452	[illegible]	[illegible]
.60					.0056	.0099	.0208	.0623	.0086	.0200	.0055	.0134	-.0438	[illegible]
.70	.0042	.0116	-.0052	-.0002	-.0000	.0041	-.0091	-.0069	-.0400	-.0350	-.0488	-.0467	[illegible]	-.0498
.80	-.0328	-.0244	-.0463	-.0464			-.0435	-.0479	-.0470	-.0464	-.0502	-.0522	-.0539	-.0539
.90	[illegible]	-.0376	-.0415	-.0454	-.0357	-.0369	-.0439	-.0477	-.0456	-.0487	-.0448	-.0466		
.95	-.0393	-.0391	-.0410	-.0433			-.0422	-.0444	-.0437	-.0456	-.0434	-.0442		-.0455

TAIL 1

	Cp at y/b of													
	0.02		0.22		0.44		0.56		0.67		0.83		0.98	
x/c	U.S.	L.S.	U.S.	L.S.	U.S.	L.S.	U.S.	L.S.	U.S.	L.S.	U.S.	L.S.	U.S.	L.S.
.05	.0608	.0742	.1822	.1782			.1811	.1585			.2036	.1707	.1673	.1610
.10	.0710	.0610					.1892	.1864	.1905	.1850			.1813	.1693
.15					.1809	.1773	.1852	.1817	.1895	.1834			.1694	.1586
.20	.0694	.0638					.1844	.1776	.1927	.1787			.1562	.1485
.25	.0150	.0112	.0736	.1330	.1799	.1725	.1842	.1749	.1843	.1767	.1838	.1751	.1495	.1350
.30			.0292	.0275			.1797	.1625	.1831	.1735	.1875	.1790	.1420	.1279
.40	.0165	.0019							.0485	.0456	.1785	.1617	.1419	.1164
.50					.0231	.0134	.0209	.0163	.0259	.0219	.0427	.0312	.1209	.0841
.60	.0230	.0045	.0016	-.0095			.0145	.0096	.0187	.0144	.0042	-.0071	-.0405	-.0420
.70					.0072	-.0000	-.0201	-.0252	-.0386	-.0410	-.0455	-.0494	-.0444	-.0445
.80	-.0310	-.0320	-.0488	-.0482	-.0448	-.0453	-.0520	-.0504			-.0532	-.0472		
.90	-.0429	-.0458	-.0463	-.0428	-.0440	-.0406	-.0468	-.0425	-.0457	-.0414	-.0468	-.0417	-.0427	-.0417
.95			-.0444	-.0421	-.0413	-.0335	-.0436	-.0405	-.0444	-.0410	-.0445	-.0417	-.0441	-.0438

TAIL 2

TABLE VIII. - CONTINUED
(d) α = 1.71°

	Cp at y/b of													
	0.02		0.22		0.44		0.56		0.57		0.83		0.98	
x/c	U.S.	L.S.	U.S.	L.S.	U.S.	L.S.	U.S.	L.S.	U.S.	L.S.	U.S.	L.S.	U.S.	L.S.
.05			.1157	.1677	.1215	.2383	.1221	.2615		.1994			.1377	[illegible]
.10	.0431	.1390	.1163	.2202	.1186	.2315		.2473	.1470	.2437	.1241	.2230	[illegible]	[illegible]
.15	.0456	.1152	.1225	.2288	.1155	.2357			.1216	.2355			[illegible]	[illegible]
.20	.0344	.1075	.1032	.2227	.1130	.2373	.1331	.2173	.1358	.2321	.1243	.2333	[illegible]	[illegible]
.25	-.0244	.0171			[illegible]	.2357	.1154	.2372	.1185	.2336	.1225	.2371	.0957	.1361
.30	-.0272	.0211							.1162	.2290	.1201	.2341	.0839	.1345
.40	-.0088	.0113	-.0367	.0362	.0025	.0523	[illegible]	.0524	.0131	.0737	.1137	.2225	.0511	.1575
.50			-.0147	.0204	-.0055	.0379	-.0039	.0380			.0229	.0660	[illegible]	[illegible]
.60					-.0030	.0306	.0121	.0509	-.0051	.0392	-.0068	.0300	-.0462	-.0392
.70	-.0032	.0234	-.0173	.0157	-.0137	.0238	-.0202	.0061	-.0461	-.0271	-.0526	-.0413	-.0565	-.0455
.80	-.0383	-.0229	-.0449	-.0404			-.0457	-.0423	-.0450	-.0443	-.0475	-.0500	-.0492	-.0522
.90	-.0413	-.0391	-.0407	-.0483	-.0348	-.0357	-.0425	-.0470	-.0446	-.0504	-.0446	-.0509		
.95	-.0430	-.0399	-.0407	-.0462			-.0419	-.0453	-.0437	-.0489	-.0441	-.0488		-.0473

TAIL 1

	Cp at y/b of													
	0.02		0.22		0.44		0.56		0.57		0.83		0.98	
x/c	U.S.	L.S.	U.S.	L.S.	U.S.	L.S.	U.S.	L.S.	U.S.	L.S.	U.S.	L.S.	U.S.	L.S.
.05	.0456	.0691	.1400	.2164			.1479	.1865			.1711	.1977	.1395	.1854
.10	.0515	.0561					.1530	.2208	.1551	.2157			.1518	.2007
.15					.1430	.2150	.1461	.2167	.1537	.2169			.1414	.1916
.20	.0464	.0621					.1463	.2124	.1471	.2124			.1303	.1786
.25	.0058	[illegible]	.0451	.1649	.1413	.2094	.1465	.2095	.1481	.2107	.1492	.2106	.1223	.1544
.30			.0072	.0450			.1422	.1958	.1471	.2071	.1520	.2145	.1154	.1560
.40	.0082	.0099							.0293	.0641	.1436	.1366	.1162	.1434
.50					.0066	.0304	.0048	.0327	.0099	.0387	.0260	.0465	.0970	.1062
.60	.0179	.0209	-.0121	.0014			-.0012	.0266	.0038	.0308	-.0094	.0023	-.0441	-.0335
.70					-.0080	.0165	-.0305	-.0152	-.0447	-.0364	-.0510	-.0452	-.0467	-.0418
.80	-.0299	-.0251	-.0488	-.0477	-.0442	-.0423	-.0491	-.0470			-.0481	-.0491		
.90	-.0415	-.0406	-.0454	-.0443	-.0412	-.0447	-.0439	-.0476	-.0434	-.0448	-.0438	-.0445	-.0420	-.0429
.95			-.0446	-.0432	-.0402	-.0404	-.0429	-.0432	-.0436	-.0425	-.0434	-.0425	-.0437	-.0460

TAIL 2

TABLE XIII. - CONTINUED

(e) α = 3.70°

Cp at y/b of

	0.02		0.22		0.44		0.56		0.67		0.83		0.98	
x/c	U.S.	L.S.	U.S.	L.S.	U.S.	L.S.	U.S.	L.S.	U.S.	L.S.	U.S.	L.S.	U.S.	L.S.
.05			.0904	.2077	.0998	.2770	.0990	.3060		.2220			.1146	.2301
.10	.0217	.1554	.0851	.2763	.0921	.2747		.2893	.1025	.2984	.1029	.2630	.1049	.2725
.15	.0221	.1660	.0787	.2795	.0889	.2812			.0955	.2756			.0941	.2536
.20	.0185	.1567	.0751	.2718	.0854	.2904	.1155	.2565	.0920	.2705	.0995	.2779	.0966	.2614
.25	-.0171	.0339			.0931	.2762	.0891	.2796	.0913	.2696	.0973	.2785	.0758	.2316
.30	-.0207	.0381							.0893	.2685	.0954	.2755	.0705	.2143
.40	-.0233	.0400	-.0181	.0604	-.0103	.0742	-.0040	.0727	.0033	.0994	.0912	.2615	.0661	.1956
.50			-.0253	.0432	-.0187	.0566	-.0161	.0588			.0075	.0972	.0575	.1747
.60					-.0220	.0520	.0093	.0548	-.0172	.0575	-.0179	.0492	-.0478	-.0347
.70	-.0220	.0427	-.0284	.0361	-.0266	.0453	-.0301	.0202	-.0509	-.0193	-.0521	-.0329	-.0519	-.0400
.80	-.0446	-.0165	-.0427	-.0313			-.0448	-.0361	-.0433	-.0394	-.0476	-.0444	-.0464	-.0480
.90	-.0434	-.0357	-.0413	-.0433	-.0349	-.0349	-.0437	-.0437	-.0452	-.0463	-.0461	-.0483		
.95	-.0434	-.0361	-.0417	-.0454			-.0434	-.0453	-.0449	-.0475	-.0459	-.0489		-.0471

TAIL 1

Cp at y/b of

	0.02		0.22		0.44		0.56		0.67		0.83		0.98	
x/c	U.S.	L.S.	U.S.	L.S.	U.S.	L.S.	U.S.	L.S.	U.S.	L.S.	U.S.	L.S.	U.S.	L.S.
.05	.0367	.0499	.0918	.2666			.1147	.2177			.1414	.2248	.1130	.2119
.10	.0419	.0432					.1171	.2579	.1210	.2500			.1230	.2334
.15					.1040	.2570	.1120	.2550	.1188	.2536			.1135	.2245
.20	.0358	.0491					.1101	.2517	.1120	.2493			.1036	.2109
.25	.0051	.0130	.0177	.1910	.1009	.2494	.1093	.2481	.1122	.2486	.1169	.2457	.0955	.1959
.30			-.0154	.0588			.1056	.2328	.1110	.2440	.1187	.2493	.0905	.1867
.40	.0061	.0178							.0110	.0840	.1105	.2317	.0903	.1780
.50					-.0086	.0492	-.0097	.0531	-.0057	.0591	.0085	.0602	.0724	.1327
.60	.0095	.0319	-.0189	.0124			-.0166	.0478	-.0104	.0511	-.0205	.0161	-.0482	-.0354
.70					-.0219	.0325	-.0404	-.0024	-.0483	-.0291	-.0503	-.0381	-.0465	-.0338
.80	-.0308	-.0190	-.0507	-.0422	-.0402	-.0371	-.0444	-.0399			-.0455	-.0447		
.90	-.0409	-.0344	-.0471	-.0495	-.0405	-.0461	-.0430	-.0457	-.0430	-.0445	-.0433	-.0450	-.0399	-.0401
.95			-.0458	-.0457	-.0403	-.0429	-.0427	-.0454	-.0433	-.0445	-.0437	-.0450	-.0444	-.0454

TAIL 2

TABLE XIII. - CONTINUED
(l) α = 5.70°

Cp at y/b of

	0.02		0.22		0.44		0.56		0.67		0.83		0.98	
x/c	U.S.	L.S.	U.S.	L.S.	U.S.	L.S.	U.S.	L.S.	U.S.	L.S.	U.S.	L.S.	U.S.	L.S.
.05			.0639	.2507	.0811	.3217	.0812	.3565		.2620			.1110	.2720
.10	-.0023	.2014	.0565	.3285	.0722	.3255		.3381	.0875	.3366	.0833	.3175	.1140	.3227
.15	-.0044	.2193	.0499	.3301	.0678	.3314			.0801	.3242			.0827	.3010
.20	-.0064	.2098	.0466	.3258	.0629	.3288	.0929	.3019	.0759	.3175	.0851	.3298	.0727	.2964
.25	-.0233	.0553			.0606	.3260	.0687	.3269	.0743	.3194	.0927	.3301	.0654	.2751
.30	-.0336	.0589							.0720	.3187	.0806	.3254	.0625	.2565
.40	-.0372	.0635	-.0287	.2872	-.0217	.0985	-.0134	.0976	-.0066	.1248	.0746	.3087	.0600	.2405
.50			-.0366	.0689	-.0301	.0838	-.0256	.0840			-.0005	.1139	.0531	.2127
.60					-.0335	.0773	.0020	.0660	-.0244	.0803	-.0250	.0753	-.0467	-.0267
.70	-.0315	.0672	-.0373	.0607	-.0375	.0707	-.0379	.0400	-.0515	-.0031	-.0522	-.0232	-.0515	-.0328
.80	-.0457	-.0060	-.0424	-.0138			-.0450	-.0269	-.0436	-.0330	-.0489	-.0369	-.0554	-.0418
.90	-.0432	-.0284	-.0421	-.0349	-.0360	-.0292	-.0443	-.0360	-.0464	-.0394	-.0477	-.0419		
.95	-.0433	-.0286	-.0428	-.0385			-.0441	-.0389	-.0462	-.0417	-.0476	-.0439		-.0429

TAIL 1

Cp at y/b of

	0.02		0.22		0.44		0.56		0.67		0.83		0.98	
x/c	U.S.	L.S.	U.S.	L.S.	U.S.	L.S.	U.S.	L.S.	U.S.	L.S.	U.S.	L.S.	U.S.	L.S.
.05	.0398	.0382	.0355	.2936			.0788	.2539			.1105	.2550	.0850	.2406
.10	.0512	.0271					.0790	.2996	.0863	.2899			.0927	.2699
.15					.0617	.3040	.0737	.3009	.0825	.2946			.0845	.2538
.20	.0548	.0360					.0713	.2964	.0761	.2927			.0756	.2453
.25	.0055	.0159	-.0063	.0091	.0566	.2929	.0701	.2920	.0756	.2907	.0832	.2816	.0691	.2307
.30			-.0254	.0715			.0667	.2739	.0743	.2842	.0836	.2837	.0657	.2285
.40	.0043	.0238							-.0073	.1092	.0763	.2694	.0643	.2123
.50					-.0230	.0676	-.0248	.0775	-.0208	.0856	-.0078	.0753	.0484	.1637
.60	-.0015	.0315	-.0231	.0251			-.0322	.0700	-.0243	.0770	-.0315	.0361	-.0510	-.0272
.70					-.0339	.0477	-.0483	.0107	-.0481	-.0191	-.0487	-.0282	-.0458	-.0379
.80	-.0403	-.0198	-.0524	-.0328	-.0419	-.0311	-.0456	-.0328			-.0463	-.0359		
.90	-.0466	-.0326	-.0498	-.0466	-.0433	-.0425	-.0451	-.0407	-.0450	-.0392	-.0448	-.0393	-.0429	-.0373
.95			-.0477	-.0490	-.0431	-.0439	-.0446	-.0429	-.0453	-.0415	-.0452	-.0412	-.0455	-.0421

TAIL 2

TABLE XIII. - CONTINUED

(g) α = 7.70°

	Cp at y/b of													
	0.02		0.22		0.44		0.56		0.67		0.83		0.98	
x/c	U.S.	L.S.	U.S.	L.S.	U.S.	L.S.	U.S.	L.S.	U.S.	L.S.	U.S.	L.S.	U.S.	L.S.
.05			.0583	.3139	.0775	.3773	.0761	.4202		.3129			[illegible]	[illegible]
.10	-.0129	.2437	.0494	.3936	.0685	.3875		.3995	.0831	.3955	.0846	.3746	[illegible]	[illegible]
.15	-.0167	.2703	.0419	.3917	.0630	.3937			.0753	.3819			[illegible]	.3557
.20	-.0188	.2600	.0373	.3894	.0577	.3919	.0799	.3562	.0707	.3783	.0795	.3891	[illegible]	[illegible]
.25	-.0366	.0789			.0550	.3879	.0630	.3847	.0688	.3810	.0770	.3928	[illegible]	[illegible]
.30	-.0409	.0820							.0660	.3779	.0747	.3836	[illegible]	.3075
.40	-.0445	.0998	-.0330	.1163	-.0263	.1283	-.0173	.1283	-.0110	.1590	.0687	.3689	[illegible]	[illegible]
.50			-.0413	.0969	-.0350	.1136	-.0294	.1151			-.0042	.1459	[illegible]	.2575
.60					-.0385	.1077	-.0032	.0851	-.0284	.1103	-.0281	.1035	[illegible]	[illegible]
.70	-.0346	.0954	-.0399	.0876	-.0423	.1017	-.0419	.0657	-.0534	.0048	-.0525	-.0109	[illegible]	[illegible]
.80	-.0441	.0068	-.0430	-.0067			-.0463	-.0140	-.0438	-.0234	-.0497	-.0257	[illegible]	-.0325
.90	-.0434	-.0188	-.0432	-.0242	-.0372	-.0202	-.0459	-.0243	-.0471	-.0291	-.0488	-.0324		
.95	-.0442	-.0183	-.0438	-.0285			-.0462	-.0281	-.0470	-.0321	-.0488	-.0356		-.0368

TAIL 1

	Cp at y/b of													
	0.02		0.22		0.44		0.56		0.67		0.83		0.98	
x/c	U.S.	L.S.	U.S.	L.S.	U.S.	L.S.	U.S.	L.S.	U.S.	L.S.	U.S.	L.S.	U.S.	L.S.
.05	.0195	.0439	.0190	.2168			.0394	.2948			.0804	.2909	.0577	.2728
.10	.0353	.0257					.0377	.3472	.0492	.3337			.0529	.3099
.15					.0159	.3329	.0328	.3476	.0440	.3420			.0559	.2982
.20	.0449	.0237					.0285	.3384	.0377	.3401			.0481	.2829
.25	.0017	-.0006	-.0241	.1874	.0095	.3096	.0267	.3307	.0364	.3375	.0505	.3213	.0437	.2763
.30			-.0375	.0649			.0238	.3083	.0350	.3284	.0495	.3293	.0409	.2664
.40	.0033	.0241							-.0256	.1400	.0431	.2958	.0387	.2549
.50					-.0348	.0768	-.0399	.0927	-.0365	.1099	-.0231	.1117	.0251	.2002
.60	.0019	.0264	-.0375	.0293			-.0468	.0836	-.0388	.0999	-.0421	.0701	-.0551	-.0156
.70					-.0432	.0584	-.0529	.0201	-.0487	-.0090	-.0528	-.0129	-.0432	-.0339
.80	-.0435	-.0246	-.0581	-.0291	-.0473	-.0258	-.0516	-.0265			-.0513	-.0227		
.90	-.0557	-.0372	-.0557	-.0434	-.0494	-.0382	-.0513	-.0349	-.0494	-.0335	-.0497	-.0280	-.0457	-.0397
.95			-.0549	-.0470	-.0488	-.0410	-.0512	-.0382	-.0503	-.0361	-.0503	-.0306	-.0511	-.0454

TAIL 2

TABLE [illegible] — CONTINUED
(h) α = 4.[illegible]°

	Cp at y/b of													
	0.02		0.22		0.44		0.56		0.67		0.83		0.98	
x/c	U.S.	L.S.	U.S.	L.S.	U.S.	L.S.	U.S.	L.S.	U.S.	L.S.	U.S.	L.S.	U.S.	L.S.
.05			.0623	.3840	.0809	.4406	.0765	.4950		.3733			.1127	.3820
.10	-.0141	.2912	.0522	.4649	.0719	.4596		.4809	.0861	.4669	.0854	.4420	.1081	.4508
.15	-.0189	.3275	.0442	.4614	.0556	.4573			.0779	.4495			.0770	.4193
.20	-.0210	.3154	.0393	.4617	.0600	.4642	.0747	.4297	.0729	.4496	.0735	.4626	.0694	.4125
.25	-.0372	.1072			.0569	.4603	.0646	.4555	.0709	.4525	.0770	.4646	.0657	.3856
.30	-.0408	.1097							.0677	.4482	.0744	.4547	.0664	.3653
.40	-.0452	.134	-.0337	.1504	-.0264	.1640	-.0161	.1654	-.0102	.1999	.0693	.4388	.0656	.3466
.50			-.0422	.1294	-.0353	.1507	-.0287	.1532			-.0051	.1548	.0619	.3089
.60					-.0388	.1452	-.0054	.1222	-.0274	.1457	-.0283	.1373	-.0458	-.0058
.70	-.0350	.1279	-.0396	.1179	-.0423	.1396	-.0410	.0952	-.0499	.0244	-.0506	.0052	-.0522	-.0113
.80	-.0425	.0242	-.0421	.0097			-.0437	.0046	-.0429	-.0048	-.0482	-.0115	-.0641	-.0197
.90	-.0425	-.0046	-.0423	-.0100	-.0356	-.0036	-.0433	-.0073	-.0461	-.0107	-.0479	-.0184		
.95	-.0447	-.0019	-.0423	-.0143			-.0438	-.0115	-.0461	-.0146	-.0476	-.0225		-.0289

TAIL 1

	Cp at y/b of													
	0.02		0.22		0.44		0.56		0.67		0.83		0.98	
x/c	U.S.	L.S.	U.S.	L.S.	U.S.	L.S.	U.S.	L.S.	U.S.	L.S.	U.S.	L.S.	U.S.	L.S.
.05	.0056	.0322	.0116	.1509			-.0025	.3251			.0410	.3298	.0258	.3043
.10	.0139	.0155					-.0058	.3759	.0085	.3741			.0307	.3479
.15					-.0206	.3258	-.0107	.3688	.0018	.3917			.0248	.3375
.20	.0305	.0102					-.0144	.3537	-.0036	.3766			.0187	.3309
.25	-.0071	-.0155	-.0276	.1520	-.0275	.3006	-.0159	.3396	-.0049	.3698	.0147	.3764	.0157	.3177
.30			-.0436	.0430			-.0179	.3144	-.0062	.3585	.0121	.3602	.0129	.3129
.40	-.0009	.0170							-.0461	.1548	.0064	.3446	.0108	.3001
.50					-.0449	.0833	-.0537	.1007	-.0522	.1235	-.0404	.1479	-.0005	.2389
.60	-.0043	.0213	-.0463	.0247			-.0536	.0929	-.0527	.1124	-.0539	.0947	-.0505	.0002
.70					-.0533	.0664	-.0531	.0249	-.0540	-.0024	-.0614	.0031	-.0558	-.0255
.80	-.0448	-.0298	-.0666	-.0313	-.0572	-.0196	-.0607	-.0219			-.0603	-.0124		
.90	-.0577	-.0417	-.0640	-.0434	-.0598	-.0337	-.0609	-.0299	-.0581	-.0274	-.0598	-.0184	-.0527	-.0344
.95			-.0637	-.0469	-.0592	-.0373	-.0609	-.0335	-.0592	-.0299	-.0539	-.0220	-.0610	-.0411

TAIL 2

TABLE XIII.- CONTINUED

(i) α = 11.75°

	Cp at y/b of													
	0.02		0.22		0.44		0.56		0.67		0.83		0.98	
x/c	U.S.	L.S.	U.S.	L.S.	U.S.	L.S.	U.S.	L.S.	U.S.	L.S.	U.S.	L.S.	U.S.	L.S.
.05			.0700	.4713	.0885	.5217	.0835	.5835		.4437			.1178	.4303
.10	-.0115	.3454	.0630	.5510	.0730	.5429		.5646	.0925	.5491	.0896	.5176	.1108	.5279
.15	-.0170	.3943	.0502	.5495	.0720	.5549			.0833	.5282			.0799	.4301
.20	-.0183	.3793	.0434	.5442	.0660	.5517	.0747	.5099	.0782	.5309	.0833	.5461	.0740	.4821
.25	-.0356	.1394			.0626	.5470	.0700	.5354	.0759	.5339	.0809	.5476	.0721	.4530
.30	-.0394	.1424							.0727	.5307	.0779	.5334	.0744	.4329
.40	-.0448	.1747	-.0330	.1889	-.0251	.2058	-.0142	.2085	[illegible]	.2460	.0722	.5136	[illegible]	[illegible]
.50			-.0417	.1658	-.0344	.1938	-.0274	.1979			-.0037	.2297	.0703	.3571
.60					-.0373	.1882	-.0065	.1583	-.0263	.1862	-.0278	.1754	-.0454	.0081
.70	-.0347	.1660	-.0331	.1536	-.0416	.1813	-.0406	.1357	-.0476	.0470	-.0481	.0233	-.0543	.0014
.80	-.0417	.0431	-.0411	.0286			-.0421	.0237	-.0414	.0147	-.0462	.0057	-.0655	-.0048
.90	-.0417	.0107	-.0407	.0063	-.0351	.0113	-.0421	.0102	-.0444	.0086	-.0461	-.0024		
.95	-.0451	.0168	-.0409	.0013			-.0423	.0053	-.0445	.0039	-.0460	-.0071		-.0192

TAIL 1

	Cp at y/b of													
	0.02		0.22		0.44		0.56		0.67		0.83		0.98	
x/c	U.S.	L.S.	U.S.	L.S.	U.S.	L.S.	U.S.	L.S.	U.S.	L.S.	U.S.	L.S.	U.S.	L.S.
.05	-.0024	.0235	-.0014	.1326			-.0231	.3381			.0127	.3694	-.0020	.3470
.10	.0107	.0082					-.0272	.3774	-.0190	.3872			-.0005	.3844
.15					-.0329	.3142	-.0314	.3644	-.0256	.3897			-.0050	.3927
.20	.0244	.0030					-.0350	.3468	-.0314	.3813			-.0090	.3720
.25	-.0134	-.0259	-.0318	.1452	-.0413	.2926	-.0368	.3331	-.0338	.3708	-.0149	.3792	-.0115	.3632
.30			-.0473	.0478			-.0386	.3097	-.0347	.3552	-.0200	.3869	-.0129	.3566
.40	-.2066	.0091							-.0582	.1513	-.0251	.3497	-.0154	.3379
.50					-.0495	.0858	-.0592	.1055	-.0615	.1282	-.0534	.1600	-.0241	.2729
.60	-.0108	.0141	-.0498	.0268			-.0651	.0972	-.0596	.1162	-.0621	.1010	-.0660	.0125
.70					-.0581	.0735	-.0637	.0250	-.0568	.0010	-.0651	.0068	-.0603	-.0196
.80	-.0472	-.0321	-.0702	-.0298	-.0622	-.0165	-.0657	-.0183			-.0647	-.0070		
.90	-.0604	-.0453	-.0690	-.0426	-.0644	-.0308	-.0662	-.0269	-.0629	-.0240	-.0630	-.0137	-.0571	-.0248
.95			-.0582	-.0457	-.0640	-.0342	-.0662	-.0306	-.0636	-.0267	-.0645	-.0178	-.0634	-.0320

TAIL 2

TABLE XIII - CONTINUED
(j) α = 15.75°

	Cp at y/b of													
	0.02		0.22		0.44		0.56		0.67		0.83		0.98	
x/c	U.S.	L.S.	U.S.	L.S.	U.S.	L.S.	U.S.	L.S.	U.S.	L.S.	U.S.	L.S.	U.S.	L.S.
.05			.0950	.7051	.1126	.7218	.1030	.7982		.6211			.1340	.6263
.10	-.0000	.4789	.0823	.7752	.1230	.7641		.7730	.1126	.7574	.1062	.7056	.1229	.7099
.15	-.0070	.5615	.0717	.7660	.0943	.7743			.1026	.7350			.0919	.5680
.20	-.0095	.5380	.0622	.7417	.0978	.7678	.0830	.6850	.0966	.7444	.1000	.7560	.0913	.5545
.25	-.0290	.2220			.0939	.7581	.0836	.7450	.0940	.7394	.0963	.7530	.0942	.6202
.30	-.0334	.2260							.0900	.7350	.0940	.7372	.0988	.5351
.40	-.0394	.2729	-.0286	.2813	-.0178	.3110	-.0059	.3207	-.0019	.3576	.0872	.7172	.0965	.5603
.50			-.0378	.2561	-.0283	.3019	-.0217	.3065			.0030	.3426	.0935	.5148
.60					-.0321	.2921	-.0065	.2365	-.0222	.2980	-.0230	.2711	-.0429	.0441
.70	-.0316	.2616	-.0353	.2449	-.0365	.2868	-.0367	.2347	-.0422	.1079	-.0417	.0723	-.0575	.0347
.80	-.0367	.0944	-.0361	.0818			-.0377	.0770	-.0372	.0668	-.0405	.0517	-.0610	.0317
.90	-.0383	.0549	-.0358	.0523	-.0326	.0528	-.0377	.0539	-.0391	.0539	-.0404	.0401		
.95	-.0421	.0732	-.0356	.0472			-.0383	.0537	-.0395	.0542	-.0402	.0339		.0187

TAIL 1

	Cp at y/b of													
	0.02		0.22		0.44		0.56		0.67		0.83		0.98	
x/c	U.S.	L.S.	U.S.	L.S.	U.S.	L.S.	U.S.	L.S.	U.S.	L.S.	U.S.	L.S.	U.S.	L.S.
.05	-.0162	.0016	-.0300	.2381			-.0419	.3868			-.0140	.4583	-.0361	.4420
.10	-.0062	-.0098					-.0446	.3818	-.0372	.3979			-.0344	.4323
.15					-.0429	.3125	-.0457	.3593	-.0447	.3931			-.0363	.4334
.20	.0011	-.0097					-.0495	.3393	-.0488	.3678			-.0385	.4118
.25	-.0277	-.0255	-.0440	.2052	-.0540	.2906	-.0510	.3244	-.0507	.3561	-.0355	.3737	-.0407	.3908
.30			-.0541	.0938			-.0519	.3004	-.0506	.3369	-.0421	.3734	-.0436	.3741
.40	-.0179	.0054							-.0650	.1497	-.0466	.3291	-.0449	.3443
.50					-.0525	.0979	-.0622	.1122	-.0557	.1236	-.0623	.1523	-.0432	.2924
.60	-.0237	.0013	-.0532	.0770			-.0682	[illegible]	-.0619	.1224	-.0665	.1005	-.0682	[illegible]
.70					-.0605	.0911	-.0578	[illegible]	-.0599	.0038	-.0677	.0134	-.0622	[illegible]
.80	[illegible]	-.0391	-.0728	-.0154	-.0663	-.0066	-.0706	-.0097			-.0676	.0001		
.90	[illegible]	-.0913	-.0720	-.0323	-.0692	-.0204	-.0700	-.0101	-.0656	[illegible]	-.0683	-.0065	[illegible]	[illegible]
.95			-.0717	-.0370	-.0675	-.0237	-.0699	-.0218	-.0672	-.0129	-.0673	-.0134	[illegible]	[illegible]

TAIL 2

TABLE XIII - CONCLUDED

(k) α = 19.70°

	Cp at y/b of													
	0.02		0.22		0.44		0.56		0.67		0.83		0.98	
x/c	U.S.	L.S.	U.S.	L.S.	U.S.	L.S.	U.S.	L.S.	U.S.	L.S.	U.S.	L.S.	U.S.	L.S.
.05			.1289	.9531	.1464	.9921	.1270	1.0799		.9476			.0319	.5844
.10	.0135	.6526	.1147	1.0473	.1347	1.0522		1.0498	.1412	1.0208	.1307	.9901	[illegible]	[illegible]
.15	.0107	.7703	.1027	1.0001	.1250	1.0677			.1236	1.0041			.0050	.6483
.20	.0070	.7354	.0913	.9811	.1171	1.0432	.1044	.9484	.1230	1.0137	.1213	1.0198	.0035	.6651
.25	-.0183	.3279			.1124	1.0239	.1173	1.0337	.1134	1.0154	.1168	1.0360	[illegible]	[illegible]
.30	-.0239	.3347							.1151	1.0142	.1126	.9832	.0019	.6558
.40	-.0304	.4017	-.0208	.3549	-.0061	.4484	.0062	.4651	.0093	.5096	.1027	.9237	-.0078	.6384
.50			-.0305	.3680	-.0176	.4327	-.0104	.4481			.0042	.4300	-.0113	.5831
.60					-.0217	.4256	-.0029	.3638	-.0131	.4444	-.0185	.3385	-.0511	[illegible]
.70	-.0261	.3830	-.0286	.3616	-.0257	.4221	-.0284	.3611	-.0334	.1872	-.0312	.1038	-.0448	.0720
.80	-.0285	.1649	-.0278	.1495			-.0288	.1439	-.0294	.1398	-.0308	.0807	-.0363	.0849
.90	-.0344	.1226	-.0270	.1143	-.0253	.1135	-.0286	.1246	-.0299	.1303	-.0312	.0711		
.95	-.0363	.1549	-.0259	.1033			-.0291	.1170	-.0304	.1216	-.0307	.0657		.0802

TAIL 1

	Cp at y/b of													
	0.02		0.22		0.44		0.56		0.67		0.83		0.98	
x/c	U.S.	L.S.	U.S.	L.S.	U.S.	L.S.	U.S.	L.S.	U.S.	L.S.	U.S.	L.S.	U.S.	L.S.
.05	-.0281	-.0069	-.0413	.3020			-.0555	.4030			-.0299	.4876	-.0504	.5060
.10	-.0225	-.0202					-.0578	.3871	-.0496	.4080			-.0479	.4734
.15					-.0501	.3265	-.0583	.3691	-.0583	.3962			-.0490	.4491
.20	-.0201	-.0091					-.0601	.3468	-.0610	.3853			-.0516	.4291
.25	-.0418	-.0233	-.0531	.3017	-.0623	.3027	-.0608	.3335	-.0628	.3675	-.0484	.3924	-.0540	.4137
.30			-.0594	.1347			-.0610	.3079	-.0615	.3510	-.0559	.3639	-.0570	.3952
.40	-.0290	.0029							-.0696	.1671	-.0591	.3237	-.0585	.3538
.50					-.0543	.1221	-.0629	.1394	-.0656	.1581	-.0670	.1677	-.0604	.2607
.60	-.0356	-.0134	-.0554	.1492			-.0698	.1334	-.0630	.1560	-.0678	.1175	-.0694	.0268
.70					-.0618	.1227	-.0692	.0569	-.0602	.0225	-.0692	.0299	-.0634	.0129
.80	-.0571	-.0412	-.0742	.0155	-.0675	.0114	-.0729	.0086			-.0692	.0168		
.90	-.0694	-.0535	-.0740	-.0135	-.0702	-.0029	-.0719	.0009	-.0673	-.0002	-.0677	.0108	-.0598	.0061
.95			-.0735	-.0229	-.0694	-.0074	-.0718	-.0024	-.0692	-.0031	-.0690	.0058	-.0678	-.0011

TAIL 2

TABLE XIV.- PRESSURE COEFFICIENTS, $\Phi = 67.5°$, $\delta = 0°$, $M = 3.70$
(a) $\alpha = -4.25°$

	Cp at y/b of													
	0.02		0.22		0.44		0.56		0.67		0.83		0.98	
x/c	U.S.	L.S.	U.S.	L.S.	U.S.	L.S.	U.S.	L.S.	U.S.	L.S.	U.S.	L.S.	U.S.	L.S.
.05			.2520	.0602	.2237	.1231	.2218	.1285		.0855			.2437	.0994
.10	.0797	.0389	.2504	.0892	.2399	.1029		.2333	.2408	.1207	.2324	.1291	.2591	.1215
.15	.0857	.0326	.2413	.0819	.2418	.1006			.2332	.1102			.2386	.1067
.20	.0823	.0252	.2333	.0834	.2405	.0996	.1007	.3777	.2386	.1057	.2394	.1177	.2230	.1041
.25	.0183	-.0076			.2370	.0980	.2329	.1137	.2403	.1043	.2366	.1151	.2065	.0930
.30	.0234	-.0095							.2372	.1017	.2352	.1112	.1933	.0822
.40	.0447	-.0074	.0515	-.0108	.0660	.0017	.0716	-.0020	.0261	.0120	.2275	.1024	.1816	.0741
.50			.0376	-.0125	.0578	-.0078	.0583	-.0114			.0811	.0069	.1648	.0572
.60					.0526	-.0127	.0060	.1963	.0545	-.0092	.0454	-.0112	-.0321	-.0454
.70	.0283	.0025	.0316	-.0184	.0445	-.0132	.0313	-.0172	-.0201	-.0421	-.0347	-.0390	-.0442	-.0464
.80	-.0268	-.0194	-.0316	-.0408			-.0358	-.0359	-.0419	-.0196	-.0446	-.0372	-.0464	-.0436
.90	-.0305	-.0277	-.0440	-.0378	-.0351	-.0134	-.0427	-.0359	-.0482	-.0303	-.0476	-.0373		
.95	-.0311	-.0288	-.0458	-.0381			-.0449	-.0359	-.0492	-.0305	-.0487	-.0368		-.0399

TAIL 1

	Cp at y/b of													
	0.02		0.22		0.44		0.56		0.67		0.83		0.98	
x/c	U.S.	L.S.	U.S.	L.S.	U.S.	L.S.	U.S.	L.S.	U.S.	L.S.	U.S.	L.S.	U.S.	L.S.
.05	.1202	.0798	.2360	.1496			.2217	.1357			.2330	.1502	.2061	.1462
.10	.1279	.0532					.2343	.1562	.2374	.1589			.2232	.1495
.15					.2300	.1464	.2319	.1513	.2375	.1566			.2073	.1385
.20	.1323	.0557					.2326	.1477	.2311	.1521			.1950	.1260
.25	.0265	-.0074	.1109	.1063	.2301	.1411	.2335	.1458	.2327	.1506	.2289	.1484	.1868	.1156
.30			.0552	.0112			.2289	.1353	.2316	.1470	.2342	.1508	.1828	.1120
.40	-.0048	-.0060							.0745	.0300	.2243	.1367	.1795	.1025
.50					.0332	-.0012	.0391	.0016	.0453	.0070	.0631	.0171	.1565	.0736
.60	.0142	-.0193	.0185	-.0220			.0335	-.0053	.0375	.0015	.0185	-.0164	-.0336	-.0393
.70					.0218	-.0127	-.0091	-.0352	-.0407	-.0448	-.0419	-.0525	-.0420	-.0431
.80	-.0361	-.0467	-.0459	-.0469	-.0414	-.0456	-.0479	-.0486			-.0509	-.0481		
.90	-.0496	-.0466	-.0529	-.0445	-.0508	-.0424	-.0525	-.0437	-.0530	-.0457	-.0512	-.0450	-.0431	-.0529
.95			-.0483	-.0446	-.0490	-.0422	-.0486	-.0427	-.0510	-.0457	-.0483	-.0443	-.0451	-.0591

TAIL 2

TABLE XIV. - CONTINUED

(b) α = -2.25°

Cp at y/b of

	0.02		0.22		0.44		0.56		0.67		0.83		0.98	
x/c	U.S.	L.S.	U.S.	L.S.	U.S.	L.S.	U.S.	L.S.	U.S.	L.S.	U.S.	L.S.	U.S.	L.S.
.05			.2031	.0968	.1864	.1601	.1941	.1727		.1193			[illegible]	[illegible]
.10	.0770	.0430	.2007	.1392	.1933	.1441		.1658	.1956	.1627	.1905	.1532	[illegible]	[illegible]
.15	.0783	.0481	.1931	.1287	.1935	.1456			.1931	.1516			[illegible]	[illegible]
.20	.0732	.0425	.1855	.1242	.1916	.1454	.1720	.2006	.1917	.1477	.1943	.1565	[illegible]	[illegible]
.25	.0180	-.0054			.1842	.1431	.1857	.1510	.1929	.1458	.1913	.1549	.1529	.1287
.30	.0208	-.0059							.1903	.1434	.1898	.1509	[illegible]	[illegible]
.40	.0277	-.0067	.0298	-.0058	.0410	.0104	.0463	.0115	.0595	.0332	.1833	[illegible]	[illegible]	[illegible]
.50			.0194	-.0151	.0319	-.0016	.0336	-.0018			.0587	.0236	.1257	.0854
.60					.0252	-.0085	.0137	.0968	.0298	.0013	.0250	-.0046	-.0385	-.0475
.70	.0183	-.0006	.0121	-.0148	.0215	-.0143	.0101	-.0189	-.0304	-.0424	-.0395	-.0501	[illegible]	-.0327
.80	-.0301	-.0257	-.0398	-.0482			-.0429	-.0466	-.0430	-.0420	-.0489	-.0455	-.0499	-.0503
.90	-.0318	-.0363	-.0462	-.0428	-.0361	-.0307	-.0474	-.0424	-.0484	-.0437	-.0493	-.0438		
.95	-.0341	-.0367	-.0434	-.0425			-.0453	-.0416	-.0463	-.0427	-.0460	-.0435		-.0409

TAIL 1

Cp at y/b of

	0.02		0.22		0.44		0.56		0.67		0.83		0.98	
x/c	U.S.	L.S.	U.S.	L.S.	U.S.	L.S.	U.S.	L.S.	U.S.	L.S.	U.S.	L.S.	U.S.	L.S.
.05	.0871	.0832	.2070	.1631			.2004	.1464			.2230	.1625	.1851	.1545
.10	.0946	.0632					.2113	.1701	.2129	.1728	.		.2208	.1572
.15					.2035	.1599	.2076	.1650	.2123	.1692			.1864	.1460
.20	.0963	.0639					.2078	.1614	.2064	.1638			.1729	.1343
.25	.0196	.0043	.0897	.1191	.2031	.1547	.2084	.1590	.2075	.1624	.2052	.1593	.1662	.1250
.30			.0416	.0204			.2035	.1489	.2066	.1589	.2102	.1627	.1611	.1175
.40	.0139	.0004							.0603	.0374	.2004	.1474	.1564	.1072
.50					.0300	.0073	.0301	.0086	.0357	.0143	.0540	.0248	.1372	.0767
.60	.0216	-.0067	.0103	-.0136			.0239	.0015	.0279	.0076	.0123	-.0110	-.0373	-.0400
.70					.0144	-.0060	-.0142	-.0304	-.0365	-.0428	-.0425	-.0506	-.0421	-.0444
.80	-.0338	-.0402	-.0463	-.0452	-.0425	-.0454	-.0494	-.0494			-.0517	-.0473		
.90	-.0468	-.0453	-.0478	-.0414	-.0487	-.0405	-.0500	-.0417	-.0485	-.0414	-.0487	-.0425	-.0440	-.0375
.95			-.0445	-.0417	-.0436	-.0386	-.0454	-.0406	-.0457	-.0416	-.0451	-.0425	-.0431	-.0455

TAIL 2

TABLE XIV. - CONTINUED

(c) α = -0.25°

	Cp at y/b of													
	0.02		0.22		0.44		0.56		0.67		0.83		0.98	
x/c	U.S.	L.S.	U.S.	L.S.	U.S.	L.S.	U.S.	L.S.	U.S.	L.S.	U.S.	L.S.	U.S.	L.S.
.05			.1534	.1357	.1473	.2017	.1479	.2204		.1556			.1638	.1675
.10	.0607	.0698	.1511	.1831	.1493	.1917		.2017	.1552	.2284	.1498	.1934	.1741	.2012
.15	.0613	.0723	.1435	.1835	.1482	.1951			.1505	.1952			.1510	.1847
.20	.0554	.0676	.1379	.1781	.1458	.1956	.1605	.1890	.1489	.1920	.1540	.1991	.1407	.1800
.25	.0077	.0048			.1433	.1924	.1468	.1967	.1493	.1974	.1508	.1981	.1257	.1533
.30	.0076	.0068							.1475	.1977	.1485	.1958	.1130	.1522
.40	.0089	.0040	.0069	.0140	.0154	.0321	.0233	.0329	.0344	.0535	.1421	.1945	.1054	.1389
.50			-.0021	.0009	.0060	.0174	.0101	.0189			.0350	.0455	.0938	.1178
.60					.0045	.0104	.0195	.0630	.0084	.0207	.0053	.0123	-.0438	-.0444
.70	.0040	.0106	-.0049	-.0009	-.0008	.0041	-.0093	-.0066	-.0403	-.0340	-.0466	-.0456	-.0502	-.0435
.80	-.0329	-.0247	-.0464	-.0466			-.0492	-.0466	-.0462	-.0455	-.0500	-.0520	-.0534	-.0539
.90	-.0361	-.0379	-.0412	-.0454	-.0343	-.0351	-.0435	-.0464	-.0451	-.0483	-.0444	-.0465		
.95	-.0393	-.0393	-.0406	-.0433			-.0419	-.0431	-.0433	-.0455	-.0432	-.0439		-.0443

TAIL 1

	Cp at y/b of													
	0.02		0.22		0.44		0.56		0.67		0.83		0.98	
x/c	U.S.	L.S.	U.S.	L.S.	U.S.	L.S.	U.S.	L.S.	U.S.	L.S.	U.S.	L.S.	U.S.	L.S.
.05	.0605	.0804	.1827	.1788			.1812	.1580			.2046	.1761	.1630	.1642
.10	.0694	.0630					.1895	.1857	.1923	.1872			.1843	.1723
.15					.1807	.1762	.1857	.1813	.1915	.1844			.1720	.1615
.20	.0683	.0653					.1849	.1771	.1844	.1797			.1586	.1513
.25	.0136	.0137	.0733	.1328	.1796	.1720	.1851	.1748	.1860	.1779	.1855	.1772	.1520	.1376
.30			.0286	.0284			.1807	.1625	.1846	.1747	.1893	.1812	.1443	.1302
.40	.0118	.0079							.0495	.0463	.1805	.1639	.1441	.1187
.50					.0221	.0151	.0212	.0171	.0268	.0223	.0439	.0332	.1231	.0854
.60	.0208	.0085	.0000	-.0058			.0150	.0105	.0195	.0152	.0051	-.0058	-.0330	-.0415
.70					.0065	.0011	-.0196	-.0253	-.0393	-.0405	-.0454	-.0495	-.0430	-.0433
.80	-.0318	-.0314	-.0495	-.0490	-.0455	-.0460	-.0521	-.0509			-.0525	-.0473		
.90	-.0438	-.0454	-.0455	-.0421	-.0436	-.0407	-.0453	-.0422	-.0446	-.0413	-.0449	-.0417	-.0415	-.0417
.95			-.0439	-.0416	-.0409	-.0399	-.0430	-.0399	-.0431	-.0409	-.0431	-.0414	-.0409	-.0431

TAIL 2

TABLE XIV - CONTINUED
(d) α = 1.76°

	Cp at y/b of													
	0.02		0.22		0.44		0.56		0.67		0.83		0.98	
x/c	U.S.	L.S.	U.S.	L.S.	U.S.	L.S.	U.S.	L.S.	U.S.	L.S.	U.S.	L.S.	U.S.	L.S.
.05			.1111	.1877	.1133	.2455	.1143	.2729		.1955			.1300	.2055
.10	.0365	.1058	.1068	.2382	.1101	.2424		.2547	.1191	.2578	.1153	.2364	.1366	.2433
.15	.0354	.1125	.1000	.2400	.1074	.2491			.1129	.2444			.1126	.2282
.20	.0322	.1065	.0952	.2352	.1049	.2479	.1330	.2231	.1102	.2421	.1154	.2449	.1016	.2209
.25	-.0062	.0181			.1024	.2439	.1081	.2471	.1105	.2401	.1135	.2455	.0912	.2064
.30	-.0088	.0238							.1083	.2384	.1111	.2431	.0803	.1900
.40	-.0104	.0224	-.0101	.0410	-.0025	.0574	.0038	.0583	.0129	.0878	.1050	.2309	.0735	.1752
.50			-.0190	.0244	-.0104	.0417	-.0253	.0441			.0161	.0691	.0653	.1529
.60					-.0139	.0351	.0140	.0546	-.0091	.0436	-.0105	.0330	-.0477	-.0341
.70	-.0077	.0276	-.0197	.0193	-.0182	.0287	-.0230	.0108	-.0479	-.0243	-.0519	-.0387	-.0530	-.0450
.80	-.0356	-.0201	-.0436	-.0386			-.0445	-.0402	-.0437	-.0428	-.0464	-.0480	-.0478	-.0501
.90	-.0405	-.0368	-.0407	-.0471	-.0339	-.0359	-.0420	-.0464	-.0445	-.0431	-.0445	-.0496		
.95	-.0424	-.0378	-.0404	-.0460			-.0420	-.0458	-.0438	-.0484	-.0440	-.0476		-.0463

TAIL 1

	Cp at y/b of													
	0.02		0.22		0.44		0.56		0.67		0.83		0.98	
x/c	U.S.	L.S.	U.S.	L.S.	U.S.	L.S.	U.S.	L.S.	U.S.	L.S.	U.S.	L.S.	U.S.	L.S.
.05	.0520	.0732	.1556	.1992			.1617	.1722			.1832	.1883	.1541	.1750
.10	.0583	.0553					.1680	.2038	.1707	.2022			.1687	.1896
.15					.1583	.1960	.1636	.1997	.1700	.2013			.1578	.1805
.20	.0538	.0563					.1627	.1957	.1633	.1969			.1468	.1677
.25	.0065	.0125	.0585	.1493	.1570	.1918	.1622	.1928	.1644	.1955	.1652	.1958	.1372	.1543
.30			.0165	.0365			.1564	.1799	.1630	.1916	.1680	.1999	.1315	.1453
.40	.0082	.0127							.0387	.0558	.1530	.1927	.1319	.1326
.50					.0123	.0245	.0122	.0259	.0174	.0313	.0340	.0410	.1110	.0993
.60	.0205	.0224	-.0084	-.0021			.0061	.0194	.0109	.0241	-.0023	-.0014	-.0407	-.0410
.70					-.0022	.0108	-.0258	-.0194	-.0424	-.0375	-.0478	-.0472	-.0438	-.0429
.80	-.0307	-.0259	-.0437	-.0491	-.0467	-.0449	-.0516	-.0499			-.0487	-.0499		
.90	-.0422	-.0415	-.0450	-.0433	-.0416	-.0431	-.0444	-.0457	-.0426	-.0436	-.0422	-.0422	-.0388	-.0423
.95			-.0440	-.0427	-.0400	-.0336	-.0424	-.0420	-.0421	-.0415	-.0417	-.0413	-.0420	-.0446

TAIL 2

TABLE XIV. - CONTINUED
(e) [illegible]

	Cp at y/b of													
	0.02		0.22		0.44		0.56		0.67		0.83		0.98	
x/c	U.S.	L.S.	U.S.	L.S.	U.S.	L.S.	U.S.	L.S.	U.S.	L.S.	U.S.	L.S.	U.S.	L.S.
.05			.0735	.2445	.0840	.2936	.0834	.3237		.2377			[illegible]	[illegible]
[illegible]	[illegible]	.1489	[illegible]	[illegible]	[illegible]	[illegible]		[illegible]	[illegible]	[illegible]	[illegible]	[illegible]	[illegible]	[illegible]
[illegible]	[illegible]	[illegible]	[illegible]	[illegible]	[illegible]	[illegible]			[illegible]	[illegible]			[illegible]	[illegible]
[illegible]	[illegible]	[illegible]	[illegible]	[illegible]	[illegible]	[illegible]	[illegible]	[illegible]	[illegible]	[illegible]	[illegible]	[illegible]	[illegible]	[illegible]
.25	[illegible]	[illegible]			[illegible]	[illegible]	[illegible]	[illegible]	[illegible]	[illegible]	[illegible]	[illegible]	[illegible]	[illegible]
.30	[illegible]	[illegible]							[illegible]	[illegible]	[illegible]	[illegible]	[illegible]	[illegible]
[illegible]	[illegible]	[illegible]	[illegible]	[illegible]	[illegible]	[illegible]	[illegible]	[illegible]	[illegible]	[illegible]	[illegible]	[illegible]	[illegible]	[illegible]
[illegible]			[illegible]	[illegible]	[illegible]	[illegible]	[illegible]	[illegible]			[illegible]	[illegible]	[illegible]	[illegible]
[illegible]					[illegible]	[illegible]	[illegible]	[illegible]	[illegible]	[illegible]	-.0237	[illegible]	[illegible]	[illegible]
.70	[illegible]	.0551	[illegible]	[illegible]	[illegible]	[illegible]	-.0335	[illegible]	-.0505	[illegible]	-.0436	[illegible]	[illegible]	[illegible]
.80	[illegible]	[illegible]	-.0426	-.0262			-.0440	[illegible]	-.0424	-.0346	-.0467	-.0335	[illegible]	[illegible]
.90	-.0427	-.0316	[illegible]	-.0401	-.0333	[illegible]	-.0430	[illegible]	-.0448	[illegible]	-.0460	[illegible]		
.95	[illegible]	[illegible]	[illegible]	-.0431			-.0428	[illegible]	-.0450	-.0435	-.0467	[illegible]		[illegible]

TAIL 1

	Cp at y/b of													
	0.02		0.22		0.44		0.56		0.67		0.83		0.98	
x/c	U.S.	L.S.	U.S.	L.S.	U.S.	L.S.	U.S.	L.S.	U.S.	L.S.	U.S.	L.S.	U.S.	L.S.
.05	[illegible]	.0481	[illegible]	[illegible]			.1400	[illegible]			[illegible]	[illegible]	[illegible]	[illegible]
[illegible]	[illegible]	.0351					[illegible]	[illegible]	.1479	[illegible]			[illegible]	[illegible]
[illegible]					.1323	[illegible]	.1389	[illegible]	[illegible]	.2207			[illegible]	[illegible]
[illegible]	[illegible]	.0375					[illegible]	[illegible]	.1405	.2170			[illegible]	[illegible]
[illegible]	[illegible]	[illegible]	[illegible]	[illegible]	[illegible]	[illegible]	[illegible]	[illegible]	[illegible]	.2154	[illegible]	[illegible]	[illegible]	[illegible]
[illegible]			[illegible]	[illegible]			[illegible]	[illegible]	[illegible]	[illegible]	[illegible]	[illegible]	[illegible]	[illegible]
[illegible]	[illegible]	[illegible]							[illegible]	[illegible]	.1377	[illegible]	[illegible]	[illegible]
[illegible]					[illegible]	[illegible]	[illegible]	[illegible]	.0074	[illegible]	[illegible]	[illegible]	[illegible]	[illegible]
[illegible]	[illegible]	.0263	[illegible]	[illegible]			[illegible]	.0315	.0016	.0352	[illegible]	[illegible]	[illegible]	[illegible]
[illegible]					[illegible]	[illegible]	-.0324	[illegible]	[illegible]	-.0335	-.0510	[illegible]	[illegible]	[illegible]
[illegible]	[illegible]	[illegible]	[illegible]	-.0462	[illegible]	[illegible]	[illegible]	[illegible]			-.0457	[illegible]		
[illegible]	[illegible]	[illegible]	[illegible]	[illegible]	[illegible]	[illegible]	-.0435	[illegible]	[illegible]	[illegible]	[illegible]	[illegible]	[illegible]	[illegible]
[illegible]			[illegible]	[illegible]	[illegible]	[illegible]	[illegible]	[illegible]	[illegible]	[illegible]	[illegible]	[illegible]	[illegible]	[illegible]

TAIL 2

TABLE [illegible] CONTINUED
[illegible]

	Cp at y/b of													
	0.02		0.22		0.44		0.56		0.57		0.83		0.98	
x/c	U.S.	L.S.	U.S.	L.S.	U.S.	L.S.	U.S.	L.S.	U.S.	L.S.	U.S.	L.S.	U.S.	L.S.
[illegible]			[illegible]	[illegible]	[illegible]	[illegible]	[illegible]	[illegible]		[illegible]			[illegible]	[illegible]
[illegible]	[illegible]	[illegible]	[illegible]	[illegible]	[illegible]	[illegible]		[illegible]	[illegible]	[illegible]	[illegible]	[illegible]	[illegible]	[illegible]
[illegible]	[illegible]	[illegible]	[illegible]	[illegible]	[illegible]	[illegible]			[illegible]	[illegible]			[illegible]	[illegible]
[illegible]	[illegible]	[illegible]	[illegible]	[illegible]	[illegible]	[illegible]	[illegible]	[illegible]	[illegible]	[illegible]	[illegible]	[illegible]	[illegible]	[illegible]
[illegible]	[illegible]	[illegible]			[illegible]	[illegible]	[illegible]	[illegible]	[illegible]	[illegible]	[illegible]	[illegible]	[illegible]	[illegible]
[illegible]	[illegible]	[illegible]							[illegible]	[illegible]	[illegible]	[illegible]	[illegible]	[illegible]
[illegible]	[illegible]	[illegible]	[illegible]	[illegible]	[illegible]	[illegible]	[illegible]	[illegible]	[illegible]	[illegible]	[illegible]	[illegible]	[illegible]	[illegible]
[illegible]			[illegible]	[illegible]	[illegible]	[illegible]	[illegible]	[illegible]			[illegible]	[illegible]	[illegible]	[illegible]
[illegible]					[illegible]	[illegible]	[illegible]	[illegible]	-.0335	[illegible]	[illegible]	[illegible]	[illegible]	[illegible]
[illegible]	[illegible]	[illegible]	-.0391	.0744	-.0432	[illegible]	[illegible]	[illegible]	[illegible]	.0355	[illegible]	[illegible]	[illegible]	[illegible]
[illegible]	[illegible]	[illegible]	[illegible]	[illegible]			-.0455	-.0164	-.0431	[illegible]	[illegible]	[illegible]	[illegible]	[illegible]
[illegible]	[illegible]	[illegible]	-.0445	-.0305	-.0354	-.0222	[illegible]	[illegible]	-.0456	-.0313	[illegible]	[illegible]		
[illegible]	[illegible]	[illegible]	[illegible]	-.0343			[illegible]	[illegible]	-.0458	[illegible]	[illegible]	[illegible]		[illegible]

TAIL 1

	Cp at y/b of													
	0.02		0.22		0.44		0.56		0.67		0.83		0.98	
x/c	U.S.	L.S.	U.S.	L.S.	U.S.	L.S.	U.S.	L.S.	U.S.	L.S.	U.S.	L.S.	U.S.	L.S.
.05	.1313	.0180	.0594	.1996			.1142	.2110			.1391	.2164	[illegible]	[illegible]
.10	.1375	.0056					.1177	.2492	.1234	.2401			.1236	.2241
.15					.0996	.2557	.1126	.2482	.1211	.2403			[illegible]	.2156
.20	.1256	.0033					.1126	.2447	.1153	.2403			[illegible]	.2024
.25	.1251	-.0120	.0312	.1080	.0984	.2482	.1100	.2406	.1150	.2390	.1135	.2357	.1074	.1827
.30			.0090	.0165			.1062	.2256	.1141	.2342	.1223	.2354	.1021	.1872
.40	.0080	.0131							.0156	.0801	.1136	.2214	.0935	.1731
.50					-.0101	.0481	-.0095	.0530	-.0036	.0581	.0101	.0529	.0735	.1312
.60	.0122	.0242	-.0100	-.0031			-.0161	.0470	-.0085	.0503	-.0175	.0158	-.0478	-.0352
.70					-.0203	.0265	-.0395	-.0023	-.0475	-.0281	-.0531	-.0332	-.0464	-.0411
.80	-.0418	-.0196	-.0505	-.0479	-.0424	-.0339	-.0465	-.0412			-.0468	-.0451		
.90	-.0526	-.0359	-.0487	-.0493	-.0418	-.0477	-.0443	-.0471	-.0434	-.0451	-.0440	-.0455	-.0397	-.0422
.95			-.0465	-.0458	-.0413	-.0423	-.0438	-.0465	-.0440	-.0448	-.0439	-.0456	-.0441	-.0447

TAIL 2

TABLE XIV - CONTINUED

[illegible]

	Cp at y/b of													
	0.02		0.22		0.44		0.56		0.67		0.83		0.98	
x/c	U.S.	L.S.	U.S.	L.S.	U.S.	L.S.	U.S.	L.S.	U.S.	L.S.	U.S.	L.S.	U.S.	L.S.
.05			[illegible]	[illegible]	.0353	.4103	.0356	[illegible]		[illegible]			[illegible]	[illegible]
.10	-.0353	.2184	[illegible]	[illegible]	[illegible]	.4303		[illegible]	[illegible]	[illegible]	[illegible]	[illegible]	[illegible]	[illegible]
.15	-.0372	.2487	-.0022	.4305	[illegible]	.4385			[illegible]	[illegible]			[illegible]	[illegible]
.20	-.0356	.2395	-.0025	[illegible]	[illegible]	.4311	.0633	[illegible]	.0294	.4255	.0344	.4258	[illegible]	[illegible]
.25	-.0440	.0634			[illegible]	.4240	.0215	[illegible]	[illegible]	[illegible]	.0364	[illegible]	[illegible]	[illegible]
.30	-.0468	.0824							[illegible]	[illegible]	.0333	[illegible]	[illegible]	[illegible]
.40	-.0500	.1111	-.0420	.1301	-.0224	.1452	-.0328	.1550	-.0235	.1839	.0285	.4022	[illegible]	[illegible]
.50			-.0497	.1132	[illegible]	.1362	-.0432	.1417			-.0237	.1616	[illegible]	[illegible]
.60					-.0433	.1318	-.0275	.1091	.0385	.1372	-.0422	[illegible]	[illegible]	[illegible]
.70	-.0349	.1149	-.0425	.1043	-.0509	.1258	-.0436	.0910	-.0523	.0245	-.0545	-.0004	-.0537	-.0258
.80	-.0498	.0180	-.0488	.0035			-.0495	-.0004	-.0491	-.0099	-.0534	-.0145	-.0503	.0254
.90	-.0484	-.0098	-.0435	-.0175	-.0379	-.0120	-.0489	-.0125	-.0510	-.0154	-.0530	-.0198		
.95	-.0495	-.0073	-.0501	-.0216			-.0492	-.0163	-.0512	-.0193	-.0528	-.0236		-.0259

TAIL 1

	Cp at y/b of													
	0.02		0.22		0.44		0.56		0.67		0.83		0.98	
x/c	U.S.	L.S.	U.S.	L.S.	U.S.	L.S.	U.S.	L.S.	U.S.	L.S.	U.S.	L.S.	U.S.	L.S.
.05	.1303	.0165	.0373	.0375			.0758	.2458			.1143	.2333	[illegible]	[illegible]
[illegible]	[illegible]	-.0055					.0750	.2899	.0913	.2695			[illegible]	[illegible]
[illegible]					.0429	.2946	.0709	.2932	.0875	.2750			[illegible]	[illegible]
[illegible]	.1353	-.0078					.0673	.2963	.0917	.2751			[illegible]	[illegible]
[illegible]	.0316	-.0379	.0154	.0225	[illegible]	.2665	.0666	.2792	.0907	.2742	.0937	.2565	[illegible]	[illegible]
.30			[illegible]	[illegible]			.0636	.2606	.0796	.2667	.0943	.2597	[illegible]	.2087
[illegible]	[illegible]	.0251							[illegible]	.1067	.0869	.2327	[illegible]	[illegible]
[illegible]					-.0161	.0442	-.0253	.0640	-.0187	.0764	-.0024	.2727	.2685	[illegible]
[illegible]	.0093	.0050	.0135	[illegible]			-.0239	.0531	-.0227	.0681	.0258	.0333	[illegible]	[illegible]
[illegible]					-.0237	.0286	-.0472	[illegible]	-.0487	-.0219	-.0509	-.0296	[illegible]	[illegible]
[illegible]	-.0427	-.0261	-.0553	[illegible]	-.0471	-.0392	-.0470	-.0413			-.0465	-.0335		
[illegible]	-.0554	-.0303	-.0527	[illegible]	-.0453	-.0434	-.0464	-.0475	-.0459	-.0434	[illegible]	[illegible]	[illegible]	[illegible]
[illegible]			[illegible]	[illegible]	[illegible]	-.0476	-.0465	-.0482	-.0462	-.0451	-.0465	[illegible]	[illegible]	[illegible]

TAIL 2

[illegible]

	Cp at y/b of													
	0.02		0.22		0.44		0.56		0.67		0.83		0.98	
x/c	U.S.	L.S.	U.S.	L.S.	U.S.	L.S.	U.S.	L.S.	U.S.	L.S.	U.S.	L.S.	U.S.	L.S.
.05			[illegible]	[illegible]	[illegible]	.1855	[illegible]	[illegible]		[illegible]			[illegible]	[illegible]
[illegible]	[illegible]	[illegible]	[illegible]	[illegible]	[illegible]	[illegible]		[illegible]	[illegible]	[illegible]	[illegible]	[illegible]	[illegible]	[illegible]
[illegible]	[illegible]	[illegible]	[illegible]	[illegible]	[illegible]	[illegible]			[illegible]	[illegible]			[illegible]	[illegible]
[illegible]	[illegible]	[illegible]	[illegible]	[illegible]	[illegible]	[illegible]	[illegible]	[illegible]	[illegible]	[illegible]	[illegible]	[illegible]	[illegible]	[illegible]
[illegible]	[illegible]	[illegible]			[illegible]	[illegible]	[illegible]	[illegible]	[illegible]	[illegible]	[illegible]	[illegible]	[illegible]	[illegible]
[illegible]	[illegible]	[illegible]							[illegible]	[illegible]	[illegible]	[illegible]	[illegible]	[illegible]
[illegible]	[illegible]	.1436	-.0443	[illegible]	-.0433	[illegible]	[illegible]	[illegible]	-.0303	[illegible]	[illegible]	[illegible]	[illegible]	[illegible]
[illegible]			[illegible]	[illegible]	-.0517	[illegible]	-.0420	[illegible]			[illegible]	[illegible]	[illegible]	[illegible]
[illegible]					-.0540	[illegible]	[illegible]	[illegible]	-.0408	[illegible]	[illegible]	[illegible]	[illegible]	[illegible]
[illegible]	-.0343	.1463	-.0452	.1354	-.0546	.1559	[illegible]	.1219	-.0540	[illegible]	-.0572	[illegible]	[illegible]	[illegible]
.80	-.0501	.0375	-.0517	.0208			[illegible]	[illegible]	-.0465	[illegible]	[illegible]	[illegible]	[illegible]	[illegible]
.90	-.0520	.0046	-.0524	-.0027	-.0399	.2013	-.0517	[illegible]	-.0547	[illegible]	-.0553	[illegible]		
.95	-.0540	.0101	-.0529	-.0066			-.0520	[illegible]	-.0514	-.0507	-.0550	[illegible]		[illegible]

TAIL 1

	Cp at y/b of													
	0.02		0.22		0.44		0.56		0.67		0.83		0.98	
x/c	U.S.	L.S.	U.S.	L.S.	U.S.	L.S.	U.S.	L.S.	U.S.	L.S.	U.S.	L.S.	U.S.	L.S.
.05	.1189	.0032	.0223	-.0132			.0233	.2944			.0943	.2542	[illegible]	[illegible]
[illegible]	.1372	-.0124					[illegible]	.3321	.0511	.3140			[illegible]	[illegible]
.15					.0021	.2110	.0155	.3213	.0457	.3212			[illegible]	.2559
.20	.1320	-.0144					[illegible]	.3011	.0297	.3155			.0363	[illegible]
.25	.0261	-.0419	.0033	[illegible]	.0017	.1903	[illegible]	.2851	[illegible]	.3082	.0650	[illegible]	[illegible]	[illegible]
[illegible]			[illegible]	-.0390			[illegible]	[illegible]	[illegible]	[illegible]	[illegible]	[illegible]	[illegible]	[illegible]
[illegible]	.0065	-.0042							-.0255	[illegible]	[illegible]	[illegible]	[illegible]	[illegible]
[illegible]					-.1213	.0325	-.0327	[illegible]	-.0357	.2847	-.0130	[illegible]	[illegible]	[illegible]
[illegible]	[illegible]	[illegible]	[illegible]	.0055			[illegible]	[illegible]	-.0359	[illegible]	[illegible]	[illegible]	[illegible]	[illegible]
[illegible]					[illegible]	[illegible]	[illegible]	[illegible]	[illegible]	[illegible]	[illegible]	[illegible]	[illegible]	[illegible]
[illegible]	[illegible]	[illegible]	[illegible]	-.0353	-.0537	[illegible]	-.0523	[illegible]			[illegible]	[illegible]		
[illegible]	[illegible]	[illegible]	-.0585	-.0585	[illegible]	[illegible]	[illegible]	[illegible]	[illegible]	[illegible]	[illegible]	[illegible]	[illegible]	[illegible]
[illegible]			[illegible]	-.0553	[illegible]	[illegible]	[illegible]	[illegible]	-.0530	[illegible]	[illegible]	[illegible]	[illegible]	[illegible]

TAIL 2

TABLE XIV. - CONTINUED
(i) α = 11.75°

	Cp at y/b of													
	0.02		0.22		0.44		0.56		0.67		0.83		0.98	
x/c	U.S.	L.S.	U.S.	L.S.	U.S.	L.S.	U.S.	L.S.	U.S.	L.S.	U.S.	L.S.	U.S.	L.S.
.05			.0027	.4725	.0283	[illegible]	.0234	[illegible]		[illegible]			[illegible]	[illegible]
.10	-.0479	.2999	-.0055	.5835	[illegible]	.6120		.6246	.0375	.5088	[illegible]	[illegible]	[illegible]	[illegible]
.15	-.0491	.3440	-.0123	.5733	[illegible]	.6133			.0274	[illegible]			[illegible]	[illegible]
.20	-.0454	.3233	-.0141	.5553	[illegible]	.5943	.0345	.5880	.0218	.5052	.0300	.5887	.0301	[illegible]
.25	-.0522	.1039			.0023	.5921	.0134	.5979	[illegible]	.5988	.0258	[illegible]	[illegible]	[illegible]
.30	-.0551	.1272							.0157	.5403	.0241	.5973	.0333	[illegible]
.40	-.0571	.1921	-.0463	.2003	-.0454	.2287	-.0368	.2604	-.035	.2862	.0136	.5845	.0323	[illegible]
.50			-.0528	.1852	-.0533	.2214	-.0483	.2336			-.0293	.2553	.027	[illegible]
.60					-.0563	.2170	-.0146	.2087	-.0435	.0339	-.0475	.2031	-.0551	.0254
.70	-.0412	.1894	-.0462	.1744	-.0572	.2091	-.0540	.1700	-.0554	.0741	-.0533	.0485	-.0650	[illegible]
.80	-.0525	.0620	-.0530	.0421			-.0543	.0418	-.0551	.0377	-.0577	.0319	-.0549	[illegible]
.90	-.0546	.0235	-.0530	.0163	-.0422	.0220	-.0542	.0265	-.0561	.0295	-.0574	.0251		
.95	-.0554	.0356	-.0532	.0131			-.0543	.0210	-.0552	.0234	-.0573	.0135		-.0252

TAIL 1

	Cp at y/b of													
	0.02		0.22		0.44		0.56		0.67		0.83		0.98	
x/c	U.S.	L.S.	U.S.	L.S.	U.S.	L.S.	U.S.	L.S.	U.S.	L.S.	U.S.	L.S.	U.S.	L.S.
.05	.1154	-.0013	.0138	-.0278			-.0251	.2481			.0525	.2876	.0485	.2549
.10	.1302	-.0190					-.0265	.2484	.0055	.3378			.0542	[illegible]
.15					-.0248	.0755	-.0244	.2236	-.0012	.3319			.0477	.2851
.20	.1190	-.0206					-.0209	.2072	-.0059	.3137			.0431	.2814
.25	.0142	-.0471	-.0124	-.0231	-.0268	.0828	-.0180	.1991	-.0075	.2941	.0325	.3101	.0337	.2731
.30			-.0252	-.0399			-.0189	.1847	-.0077	.2761	.0300	.3144	.0361	[illegible]
.40	-.0019	-.0114							-.0453	.0946	.0235	.2983	.0327	.2581
.50					-.0367	.0195	-.0413	.0520	-.0482	.0644	-.0331	.1124	.0200	.2093
.60	-.0011	-.0272	-.0283	-.0350			-.0459	.0444	-.0453	.0631	-.0488	.0611	-.0596	[illegible]
.70					-.0450	.0101	-.0568	-.0028	-.0515	-.0170	-.0568	-.0149	-.0539	-.0314
.80	-.0438	-.0518	-.0622	-.0601	-.0614	-.0408	-.0623	-.0357			-.0559	-.0297		
.90	-.0633	-.0605	-.0668	-.0631	-.0601	-.0492	-.0592	-.0415	-.0549	-.0377	-.0551	-.0360	-.0497	-.0363
.95			-.0640	-.0615	-.0585	-.0508	-.0585	-.0439	-.0555	-.0404	-.0562	-.0400	-.0549	-.0425

TAIL 2

REPRODUCIBILITY OF THE
ORIGINAL PAGE IS POOR

TABLE XIV. - CONTINUED
(j) α = 15.75°

	Cp at y/b of													
	0.02		0.22		0.44		0.56		0.67		0.83		0.99	
x/c	U.S.	L.S.	U.S.	L.S.	U.S.	L.S.	U.S.	L.S.	U.S.	L.S.	U.S.	L.S.	U.S.	L.S.
.05			.0084	.6799	.0352	.3236	.0363	[illegible]		[illegible]			[illegible]	[illegible]
[illegible]	[illegible]	[illegible]	[illegible]	[illegible]	.0257	.3554		.4553	.0442	[illegible]	[illegible]	[illegible]	[illegible]	[illegible]
[illegible]	[illegible]	[illegible]	[illegible]	[illegible]	[illegible]	.3391			.0377	.4492			[illegible]	[illegible]
[illegible]	[illegible]	[illegible]	[illegible]	[illegible]	[illegible]	[illegible]	.0331	.2977	.0205	[illegible]	[illegible]	[illegible]	[illegible]	[illegible]
[illegible]	-.0312	[illegible]			[illegible]	.4035	[illegible]	.4297	.0235	[illegible]	[illegible]	[illegible]	[illegible]	[illegible]
[illegible]	[illegible]	[illegible]							.0205	.8313	[illegible]	[illegible]	[illegible]	[illegible]
[illegible]	[illegible]	[illegible]	[illegible]	[illegible]	-.0443	.3378	-.0380	.3626	-.0341	[illegible]	[illegible]	[illegible]	[illegible]	[illegible]
[illegible]			-.0548	[illegible]	-.0533	.3301	[illegible]	.3526			[illegible]	[illegible]	[illegible]	[illegible]
[illegible]					-.0552	[illegible]	[illegible]	[illegible]	[illegible]	.3552	[illegible]	[illegible]	[illegible]	[illegible]
[illegible]	[illegible]	[illegible]	[illegible]	[illegible]	-.0580	[illegible]	[illegible]	[illegible]	-.0547	[illegible]	-.0582	[illegible]	[illegible]	[illegible]
[illegible]	[illegible]	[illegible]	-.0547	.1021			[illegible]	[illegible]	-.0499	[illegible]	-.0575	[illegible]	[illegible]	[illegible]
[illegible]	[illegible]	.0758	[illegible]	[illegible]	-.0430	.0684	[illegible]	.1771	-.0561	[illegible]	-.0574	[illegible]		
[illegible]	[illegible]	[illegible]	-.0551	[illegible]			[illegible]	[illegible]	[illegible]	[illegible]	[illegible]	[illegible]		[illegible]

TAIL 1

	Cp at y/b of													
	0.02		0.22		0.44		0.56		0.67		0.83		0.98	
x/c	U.S.	L.S.	U.S.	L.S.	U.S.	L.S.	U.S.	L.S.	U.S.	L.S.	U.S.	L.S.	U.S.	L.S.
.05	.0874	-.0135	-.0049	-.0232			-.0553	.1336			-.0178	.0455	[illegible]	[illegible]
.10	.0954	-.0301					-.0540	.1336	-.0452	.1713			.0069	.3506
.15					-.0101	.0509	-.0516	.1301	.0525	.1587			[illegible]	[illegible]
.20	.0935	-.0303					-.0515	.1261	-.0543	.1518			-.0029	[illegible]
.25	-.0036	-.0324	-.0254	-.0138	-.0471	.0536	-.0513	.1235	-.0552	.1409	-.0375	[illegible]	[illegible]	[illegible]
.30			-.0376	-.0428			-.0502	.1129	-.0538	.1416	-.0430	.1725	[illegible]	[illegible]
.40	-.0133	-.0160							-.0518	.0445	-.0452	.1331	[illegible]	[illegible]
.50					-.0441	.0071	-.0545	.0245	-.0603	.0341	-.0581	[illegible]	[illegible]	[illegible]
.60	-.0143	-.0345	-.0374	-.0359			-.0510	.0166	-.0583	.0327	[illegible]	.0153	[illegible]	[illegible]
.70					-.0512	-.0049	-.0663	-.0189	-.0578	-.0265	[illegible]	[illegible]	[illegible]	[illegible]
.80	-.0534	-.0542	-.0656	-.0625	-.0660	-.0431	[illegible]	-.0451			[illegible]	[illegible]		
.90	-.0579	-.0644	-.0700	-.0664	-.0673	-.0555	-.0550	-.0509	-.0624	-.0444	[illegible]	[illegible]	[illegible]	[illegible]
.95			-.0687	-.0655	-.0654	-.0564	[illegible]	-.0533	-.0646	-.0473	-.0643	[illegible]	[illegible]	[illegible]

TAIL 2

TABLE XIV - CONCLUDED
(k) α = 19.75°

	Cp at y/b of													
	0.02		0.22		0.44		0.56		0.67		0.83		0.98	
x/c	U.S.	L.S.	U.S.	L.S.	U.S.	L.S.	U.S.	L.S.	U.S.	L.S.	U.S.	L.S.	U.S.	L.S.
.05			.0211	.9525	.0488	1.1219	.0537	1.2336		1.0991			.0279	[illegible]
.10	-.0467	.5518	.0059	1.0703	.0375	1.1515		1.1909	.0539	1.0984	.0574	1.1233	.0192	[illegible]
.15	-.0476	.5571	-.0014	.9997	.0233	1.1135			.0457	[illegible]			.0542	[illegible]
.20	-.0477	.5225	-.0059	.9571	.0218	1.0842	.0373	1.0401	.0270	1.1075	.0189	1.1922	[illegible]	[illegible]
.25	-.0519	.2500			[illegible]	1.0544	.0237	1.0382	[illegible]	[illegible]	[illegible]	[illegible]	[illegible]	[illegible]
.30	-.0535	.3378							.0225	[illegible]	.0367	[illegible]	[illegible]	[illegible]
.40	-.0535	[illegible]	-.0475	.4275	-.0517	.4635	-.0311	.4997	[illegible]	.5527	.0200	.0947	[illegible]	[illegible]
.50			-.0557	.3954	-.0516	.4653	-.0443	.4841			-.0252	.5573	.0573	[illegible]
.60					-.0547	.4489	-.0171	.4000	-.0417	.5000	-.0450	.4874	-.0577	[illegible]
.70	-.0433	.4341	-.0465	.3951	-.0574	.4384	-.0527	.3925	-.0508	.2142	-.0557	.1987	-.0623	[illegible]
.80	-.0530	.2046	-.0539	.1766			-.0526	.1861	-.0473	.1610	-.0548	.1684	-.0625	[illegible]
.90	-.0537	.1576	-.0540	.1345	-.0434	.1325	-.0525	.1418	-.0536	.1513	-.0547	.1524		
.95	-.0532	.2044	-.0546	.1341			-.0525	.1351	-.0545	.1464	-.0550	.1443		[illegible]

TAIL 1

	Cp at y/b of													
	0.02		0.22		0.44		0.56		0.67		0.83		0.98	
x/c	U.S.	L.S.	U.S.	L.S.	U.S.	L.S.	U.S.	L.S.	U.S.	L.S.	U.S.	L.S.	U.S.	L.S.
.05	.0218	-.0214	-.0146	-.0158			-.0614	.1513			-.0351	.1931	-.0486	.2301
.10	.0309	-.0275					-.0607	.1478	-.0527	.1661			-.0494	.2142
.15					-.0466	.0932	-.0588	.1441	-.0608	.1600			-.0503	[illegible]
.20	.0265	-.0360					-.0587	.1405	-.0622	.1523			-.0514	[illegible]
.25	-.0252	-.0343	-.0332	-.0206	-.0552	.0996	-.0530	.1374	-.0628	.1475	-.0499	.1473	-.0534	[illegible]
.30			-.0440	-.0443			-.0585	.1250	-.0614	.1395	-.0568	.1358	-.0557	[illegible]
.40	-.0238	-.0199							-.0662	.0453	-.0531	.1112	-.0557	[illegible]
.50					-.0474	.0181	-.0584	.0347	-.0647	.0377	-.0646	.0399	-.0553	[illegible]
.60	-.0273	-.0357	-.0433	-.0345			-.0656	.0284	-.0625	.0377	-.0668	.0137	-.0631	[illegible]
.70					-.0542	.0072	-.0634	-.0111	-.0611	-.0270	-.0630	-.0303	-.0633	-.0342
.80	-.0564	-.0539	-.0681	-.0604	-.0574	-.0435	-.0746	-.0415			-.0691	-.0378		
.90	-.0700	-.0660	-.0720	-.0660	-.0694	-.0515	-.0722	-.0475	-.0659	-.0434	-.0674	-.0399	-.0593	-.0392
.95			-.0708	-.0675	-.0576	-.0525	-.0713	-.0502	-.0687	-.0465	-.0685	-.0432	-.0663	-.0472

TAIL 2

TABLE XV. - PRESSURE COEFFICIENTS, $\phi = 90°$, $\delta = 0°$, $M = 3.70$

(a) $\alpha = -4.20°$

	Cp at y/b of													
	0.02		0.22		0.44		0.56		0.67		0.83		0.98	
x/c	U.S.	L.S.	U.S.	L.S.	U.S.	L.S.	U.S.	L.S.	U.S.	L.S.	U.S.	L.S.	U.S.	L.S.
.05			.2615	.0595	.2359	.1229	.2337	.1243		.1922			[illegible]	[illegible]
.10	.1315	.0215	[illegible]	[illegible]	.2498	[illegible]		.1397	[illegible]	[illegible]	[illegible]	[illegible]	[illegible]	[illegible]
.15	.1268	.0244	.2567	[illegible]	.2513	.0954			[illegible]	[illegible]			[illegible]	[illegible]
.20	[illegible]	[illegible]	[illegible]	.0973	.2521	.0952	.2423	.1388	[illegible]	[illegible]	[illegible]	[illegible]	[illegible]	[illegible]
.25	[illegible]	-.0179			.2429	.0942	.2422	[illegible]	[illegible]	[illegible]	[illegible]	[illegible]	[illegible]	[illegible]
.30	.0337	[illegible]							.2466	.0960	[illegible]	[illegible]	[illegible]	[illegible]
.40	.0537	-.0212	.0614	-.0173	.0708	-.0062	[illegible]	-.0062	.0912	[illegible]	[illegible]	[illegible]	[illegible]	[illegible]
.50			.0434	-.0244	.0637	[illegible]	.0633	-.0176			[illegible]	[illegible]	[illegible]	[illegible]
.60					.0597	-.0213	.0715	.0513	.0595	-.0153	[illegible]	[illegible]	[illegible]	[illegible]
.70	.0398	-.0083	.0413	-.0272	.0523	-.0288	.0369	[illegible]	[illegible]	[illegible]	[illegible]	[illegible]	[illegible]	[illegible]
.80	-.0239	-.0280	-.0248	-.0448			-.0235	-.0442	-.0313	[illegible]	-.0275	[illegible]	-.0366	[illegible]
.90	-.0255	-.0371	-.0373	-.0429	-.0232	-.0327	-.0361	-.0434	-.0337	[illegible]	-.0322	[illegible]	-.034	[illegible]
.95	-.0255	-.0395	-.0397	-.0430			-.0349	-.0434	[illegible]	[illegible]	[illegible]	[illegible]		[illegible]

TAIL 1

	Cp at y/b of													
	0.02		0.22		0.44		0.56		0.67		0.83		0.98	
x/c	U.S.	L.S.	U.S.	L.S.	U.S.	L.S.	U.S.	L.S.	U.S.	L.S.	U.S.	L.S.	U.S.	L.S.
.05	.0925	.1236	.1940	.1921			.1832	.1676			.2138	.1872	.1751	.1762
.10	.0951	.0932					.1975	.1943	.1956	.1969			.1846	.1811
.15					.1904	.1871	.1941	.1897	.1965	.1954			[illegible]	[illegible]
.20	.0945	.0927					.1935	.1860	.1932	.1887			.1619	.1656
.25	[illegible]	[illegible]	.0847	.1474	.1895	.1814	.1947	.1849	.1938	.1876	.1921	.1845	.1561	.1453
.30			.0325	.0368			.1891	.1727	.1927	.1835	.1877	.1860	.1532	[illegible]
.40	.0298	.0275							.0559	.0522	.1831	.1125	.1522	.1302
.50					.0225	.0192	.0225	.0191	.0285	.0245	.0455	.0363	.1303	.0913
.60	.0103	.0076	.0032	.0017			.0134	.0120	.0209	.0179	.0065	-.0020	-.0365	-.0315
.70					.0075	.0060	-.0139	-.0223	-.0354	-.0323	-.0423	-.0432	-.0355	-.0333
.80	-.0360	-.0359	-.0466	-.0445	-.0453	-.0451	-.0497	-.0479			-.0494	-.0455		
.90	-.0453	-.0419	-.0419	-.0378	-.0433	-.0344	-.0433	-.0335	-.0416	-.0333	-.0416	-.0376	-.0374	-.0440
.95			-.0405	-.0377	-.0400	-.0353	-.0437	-.0369	-.0400	-.0372	-.0412	-.0378	-.0475	-.0512

TAIL 2

TABLE XV. - CONTINUED

(b) α = -2.20°

	Cp at y/b of													
	0.02		0.22		0.44		0.56		0.67		0.83		0.98	
x/c	U.S.	L.S.	U.S.	L.S.	U.S.	L.S.	U.S.	L.S.	U.S.	L.S.	U.S.	L.S.	U.S.	L.S.
.05			.2083	.0955	.1903	.1534	.1894	.1712		.1153			.2052	[illegible]
.10	.0953	.0446	.2076	.1347	.1961	.1420		.1605	.2005	.1607	.1932	.1491	[illegible]	[illegible]
.15	.0936	.0472	.2002	.1367	.1969	.1433			.1982	.1494			[illegible]	[illegible]
.20	.0866	.0425	.1939	.1238	.1972	.1423	.2140	.1445	.1956	.1442	.1993	.1534	.1943	.1361
.25	.0224	-.0091			.1933	.1413	.1947	.1494	.1972	.1464	.1952	.1521	[illegible]	[illegible]
.30	.0250	-.0101							.1954	.1395	.1945	.1455	[illegible]	[illegible]
.40	.0307	-.0151	.0348	-.0071	.0436	.0065	.0491	.0091	.0623	.0295	.1879	.1397	.1446	.1034
.50			.0243	-.0159	.0353	-.0053	.0363	-.0051			.0613	.0216	.1255	.0856
.60					.0318	-.0112	.0604	.0314	.0328	-.0021	.0278	-.0070	-.0343	-.0468
.70	.0209	-.0049	.0165	-.0176	.0256	-.0172	.0146	-.0251	-.0272	-.0452	-.0374	-.0512	-.0421	-.0533
.80	-.0281	-.0294	-.0356	-.0488			-.0388	-.0489	-.0375	-.0437	-.0452	-.0466	-.0474	-.0503
.90	-.0308	-.0394	-.0434	-.0435	-.0287	-.0332	-.0433	-.0448	-.0451	-.0462	-.0463	-.0453		
.95	-.0316	-.0416	-.0404	-.0425			-.0418	-.0439	-.0430	-.0445	-.0436	-.0449		-.0417

TAIL 1

	Cp at y/b of													
	0.02		0.22		0.44		0.56		0.67		0.83		0.98	
x/c	U.S.	L.S.	U.S.	L.S.	U.S.	L.S.	U.S.	L.S.	U.S.	L.S.	U.S.	L.S.	U.S.	L.S.
.05	.0757	.1058	.1864	.1842			.1833	.1625			.2090	.1806	.1700	.1719
.10	.0820	.0739					.1920	.1995	.1934	.1913			.1855	.1752
.15					.1836	.1808	.1979	.1648	.1927	.1880			.1717	.1634
.20	.0811	.0792					.1872	.1807	.1862	.1825			.1554	.1517
.25	.0113	.0154	.0777	.1398	.1827	.1757	.1880	.1786	.1875	.1812	.1972	.1785	.1520	.1414
.30			.0295	.0337			.1836	.1675	.1864	.1774	.1917	.1822	.1474	.1332
.40	.0073	.0214							.0511	.0475	.1834	.1664	.1431	.1233
.50					.0206	.0177	.0211	.0178	.0267	.0231	.0438	.0357	.1242	[illegible]
.60	.0119	.0092	.0011	-.0002			.0149	.0106	.0190	.0160	.0053	-.0017	-.0360	-.0307
.70					.0053	.0033	-.0139	-.0235	-.0360	-.0340	-.0436	-.0436	-.0366	-.0367
.80	-.0350	-.0347	-.0476	-.0456	-.0443	-.0445	-.0507	-.0489			-.0506	-.0451		
.90	-.0466	-.0447	-.0428	-.0391	-.0428	-.0394	-.0443	-.0406	-.0423	-.0388	-.0430	-.0379	-.0354	-.0342
.95			-.0420	-.0389	-.0394	-.0368	-.0415	-.0382	-.0410	-.0375	-.0415	-.0378	-.0407	-.0400

TAIL 2

TABLE XV. - CONTINUED
(c) α = -0.20°

	Cp at y/b of													
	0.02		0.22		0.44		0.56		0.67		0.83		0.98	
x/c	U.S.	L.S.	U.S.	L.S.	U.S.	L.S.	U.S.	L.S.	U.S.	L.S.	U.S.	L.S.	U.S.	L.S.
.05			.1546	.1355	.1481	.2017	.1484	.2223		.1545			[illegible]	[illegible]
.10	.0641	.0698	.1520	[illegible]	.1500	.1914		.2055	.1561	.2021	[illegible]	[illegible]	[illegible]	[illegible]
.15	.0635	.0731	.1451	.1933	.1495	.1949			.1514	.1958			[illegible]	[illegible]
.20	.0578	.0563	.1337	[illegible]	.1471	.1960	.1735	.1761	.1498	.1927	[illegible]	[illegible]	[illegible]	[illegible]
.25	.0035	.0045			.1447	.1925	.1479	.1985	.1501	.1914	[illegible]	[illegible]	[illegible]	[illegible]
.30	.0081	.0065							.1485	.1853	[illegible]	[illegible]	[illegible]	[illegible]
.40	.0129	.0032	.0105	.0148	.0190	.0329	.0244	.0327	.0358	.0583	[illegible]	[illegible]	[illegible]	[illegible]
.50			.0013	.0012	.0108	.0180	.0126	.0178			[illegible]	[illegible]	[illegible]	[illegible]
.60					.0076	.0107	.0440	.0273	.0106	.0187	.0077	[illegible]	[illegible]	[illegible]
.70	.0063	.0109	-.0021	-.0008	.0023	.0043	-.0048	-.0096	-.0364	-.0370	[illegible]	-.0461	-.0479	[illegible]
.80	-.0300	-.0250	-.0433	-.0465			-.0457	-.0483	-.0414	-.0456	[illegible]	-.0527	-.0508	-.0535
.90	-.0331	-.0381	-.0384	-.0453	-.0286	-.0361	-.0404	-.0484	-.0424	-.0487	[illegible]	[illegible]		
.95	-.0359	-.0395	-.0377	-.0431			-.0391	-.0449	-.0410	-.0457	[illegible]	-.0452		-.0441

TAIL 1

	Cp at y/b of													
	0.02		0.22		0.44		0.56		0.67		0.83		0.98	
x/c	U.S.	L.S.	U.S.	L.S.	U.S.	L.S.	U.S.	L.S.	U.S.	L.S.	U.S.	L.S.	U.S.	L.S.
.05	.0605	.0889	.1822	.1735			.1799	.1584			.2027	.1784	.1686	.1659
.10	.0680	.0643					.1884	.1866	.1904	.1881			.1856	.1733
.15					.1800	.1777	.1843	.1820	.1898	.1852			.1727	.1623
.20	.0573	.0664					.1837	.1780	.1829	.1805			.1533	.1527
.25	.0124	.0158	.0730	.1346	.1790	.1733	.1838	.1753	.1845	.1786	.1860	.1784	.1526	.1390
.30			.0292	.0305			.1791	.1631	.1833	.1755	.1901	.1826	.1451	.1318
.40	.0084	.0200							.0489	.0467	.1809	.1649	.1444	.1202
.50					.0200	.0168	.0203	.0179	.0265	.0231	.0433	.0343	.1234	.0891
.60	.0191	.0136	-.0006	-.0024			.0145	.0105	.0190	.0162	.0044	-.0042	-.0379	-.0384
.70					.0058	.0021	-.0222	-.0236	-.0374	-.0355	-.0446	-.0451	-.0405	-.0399
.80	-.0307	-.0290	-.0480	-.0456	-.0451	-.0444	-.0509	-.0489			-.0511	-.0454		
.90	-.0424	-.0437	-.0433	-.0400	-.0419	-.0389	-.0441	-.0402	-.0417	-.0398	-.0428	-.0395	-.0402	-.0382
.95			-.0421	-.0395	-.0391	-.0363	-.0415	-.0379	-.0408	-.0380	-.0414	-.0388	-.0417	-.0405

TAIL 2

TABLE XV. - CONTINUED

(d) α = 1.81°

	Cp at y/b of													
	0.02		0.22		0.44		0.56		0.67		0.83		0.98	
x/c	U.S.	L.S.	U.S.	L.S.	U.S.	L.S.	U.S.	L.S.	U.S.	L.S.	U.S.	L.S.	U.S.	L.S.
.05			.1072	.1962	.1099	.2468	.1108	.2766		.1975			.1275	.2094
.10	.0375	.0951	.1030	.2399	.1068	.2455		.2536	.1153	.2604	.1144	.2445	.1331	.2500
.15	.0383	.1022	.0961	.2390	.1043	.2536			.1090	.2485			.1103	.2374
.20	.0327	.0981	.0915	.2385	.1020	.2510	.1377	.2222	.1064	.2468	.1129	.2513	.1006	.2284
.25	-.0032	.0173			.0997	.2479	.1054	.2508	.1066	.2446	.1104	.2508	.0904	.2129
.30	-.0053	.0236							.1046	.2421	.1081	.2481	.0800	.2002
.40	-.0059	.0238	-.0076	.0419	-.0002	.0606	.0046	.0622	.0125	.0877	.1012	.2357	.0720	.1822
.50			-.0150	.0246	-.0075	.0449	-.0062	.0466			.0155	.0719	.0635	.1538
.60					-.0109	.0378	.0298	.0362	-.0061	.0460	-.0092	.0349	-.0454	-.0374
.70	-.0010	.0294	-.0167	.0194	-.0155	.0313	-.0200	.0104	-.0439	-.0222	-.0481	-.0374	-.0500	-.0442
.80	-.0293	-.0181	-.0409	-.0379			-.0410	-.0391	-.0392	-.0416	-.0435	-.0469	-.0459	-.0477
.90	-.0347	-.0347	-.0381	-.0466	-.0282	-.0346	-.0389	-.0448	-.0415	-.0479	-.0412	-.0485		
.95	-.0369	-.0354	-.0378	-.0454			-.0389	-.0447	-.0409	-.0475	-.0416	-.0463		-.0447

TAIL 1

	Cp at y/b of													
	0.02		0.22		0.44		0.56		0.67		0.83		0.98	
x/c	U.S.	L.S.	U.S.	L.S.	U.S.	L.S.	U.S.	L.S.	U.S.	L.S.	U.S.	L.S.	U.S.	L.S.
.05	.0509	.0851	.1784	.1737			.1781	.1559			.1977	.1746	.1693	.1607
.10	.0584	.0589					.1857	.1841	.1873	.1842			.1868	.1732
.15					.1781	.1753	.1818	.1798	.1876	.1820			.1754	.1638
.20	.0562	.0583					.1805	.1751	.1809	.1776			.1627	.1524
.25	.0112	.0123	.0719	.1311	.1767	.1711	.1807	.1727	.1823	.1760	.1831	.1768	.1529	.1394
.30			.0244	.0275			.1763	.1602	.1809	.1722	.1866	.1803	.1483	.1306
.40	.0104	.0198							-.0492	.0455	.1777	.1645	.1492	.1183
.50					.0199	.0174	.0208	.0176	.0261	.0231	.0418	.0328	.1246	.0872
.60	.0241	.0167	-.0029	-.0043			.0149	.0106	.0188	.0166	.0046	-.0056	-.0385	-.0405
.70					.0057	.0028	-.0198	-.0240	-.0382	-.0355	-.0443	-.0465	-.0409	-.0400
.80	-.0292	-.0273	-.0484	-.0464	-.0452	-.0452	-.0512	-.0496			-.0507	-.0449		
.90	-.0338	-.0420	-.0438	-.0410	-.0421	-.0394	-.0441	-.0410	-.0414	-.0389	-.0423	-.0383	-.0398	-.0391
.95			-.0430	-.0408	-.0395	-.0373	-.0417	-.0389	-.0409	-.0382	-.0414	-.0383	-.0426	-.0407

TAIL 2

TABLE XV.- CONTINUED

(e) α = 3.80°

	Cp at y/b of													
	0.02		0.22		0.44		0.56		0.67		0.83		0.98	
x/c	U.S.	L.S.	U.S.	L.S.	U.S.	L.S.	U.S.	L.S.	U.S.	L.S.	U.S.	L.S.	U.S.	L.S.
.05			.0669	.2510	.0753	.2984	.0759	.3372		.2448			.0933	.2531
.10	.0142	.1205	.0606	.2948	.0688	.3067		.3161	.0801	.3154	.0810	.2987	.0963	.3020
.15	.0149	.1340	.0543	.3054	.0654	.3159			.0725	.3070			.0747	.2930
.20	.0115	.1297	.0516	.2974	.0625	.3119	.1013	.2712	.0694	.3056	.0757	.3056	.0656	.2816
.25	-.0154	.0271			.0604	.3078	.0675	.3091	.0689	.3050	.0734	.3060	.0570	.2642
.30	-.0181	.0396							.0670	.3022	.0715	.3039	.0511	.2469
.40	-.0205	.0490	-.0212	.0709	-.0163	.0881	-.0123	.0910	-.0062	.1166	.0661	.2887	.0443	.2306
.50			-.0274	.0523	-.0246	.0712	-.0221	.0768			-.0026	.1017	.0377	.2021
.60					-.0276	.0661	.0157	.0503	-.0194	.0761	-.0240	.0612	-.0485	-.0283
.70	-.0040	.0529	-.0264	.0465	-.0313	.0601	-.0323	.0359	-.0451	-.0097	-.0457	-.0268	-.0475	-.0396
.80	-.0278	-.0091	-.0418	-.0252			-.0404	-.0282	-.0384	-.0348	-.0436	-.0381	-.0435	-.0420
.90	-.0333	-.0285	-.0404	-.0396	-.0296	-.0305	-.0397	-.0373	-.0422	-.0411	-.0429	-.0417		
.95	-.0359	-.0293	-.0405	-.0420			-.0398	-.0397	-.0422	-.0426	-.0430	-.0433		-.0410

TAIL 1

	Cp at y/b of													
	0.02		0.22		0.44		0.56		0.67		0.83		0.98	
x/c	U.S.	L.S.	U.S.	L.S.	U.S.	L.S.	U.S.	L.S.	U.S.	L.S.	U.S.	L.S.	U.S.	L.S.
.05	.0574	.0944	.1764	.1699			.1758	.1538			.1931	.1710	.1666	.1560
.10	.0587	.0669					.1834	.1818	.1946	.1810			.1648	.1712
.15					.1770	.1736	.1793	.1778	.1853	.1792			.1745	.1630
.20	.0534	.0630					.1784	.1741	.1788	.1755			.1624	.1514
.25	.0037	.0091	.0727	.1314	.1760	.1688	.1787	.1709	.1793	.1736	.1792	.1747	.1550	.1374
.30			.0271	.0278			.1744	.1586	.1781	.1700	.1839	.1782	.1518	.1321
.40	.0059	.0170							.0505	.0441	.1744	.1638	.1495	.1229
.50					.0203	.0167	.0209	.0172	.0251	.0234	.0412	.0290	.1242	.0872
.60	.0125	.0077	-.0027	-.0044			.0154	.0103	.0185	.0167	.0055	-.0069	-.0339	-.0414
.70					.0073	.0030	-.0189	-.0242	-.0378	-.0357	-.0449	-.0471	-.0417	-.0407
.80	-.0329	-.0334	-.0493	-.0483	-.0453	-.0459	-.0513	-.0503			-.0509	-.0447		
.90	-.0437	-.0452	-.0446	-.0424	-.0435	-.0408	-.0451	-.0420	-.0417	-.0398	-.0428	-.0388	-.0399	-.0380
.95			-.0435	-.0419	-.0404	-.0384	-.0422	-.0399	-.0407	-.0387	-.0416	-.0383	-.0430	-.0412

TAIL 2

TABLE XV. - CONTINUED

(f) α = 5.30°

	Cp at y/b of													
	0.02		0.22		0.44		0.56		0.67		0.83		0.98	
x/c	U.S.	L.S.	U.S.	L.S.	U.S.	L.S.	U.S.	L.S.	U.S.	L.S.	U.S.	L.S.	U.S.	L.S.
.05			.0310	.2986	.0457	.3553	.0448	.4036		.3317			[illegible]	[illegible]
.10	-.0045	.1306	.0241	.3369	.0354	.3759		.38[illegible]	[illegible]	[illegible]	[illegible]	[illegible]	[illegible]	[illegible]
.15	-.0038	[illegible]	[illegible]	.3696	.0308	.3850			[illegible]	[illegible]			[illegible]	[illegible]
.20	-.0054	[illegible]	[illegible]	.3531	.0291	.3755	.0721	.3315	[illegible]	[illegible]	[illegible]	[illegible]	[illegible]	[illegible]
.25	-.0243	[illegible]			.0257	.3683	.0344	.3725	[illegible]	[illegible]	[illegible]	[illegible]	[illegible]	[illegible]
.30	-.0263	[illegible]							[illegible]	[illegible]	[illegible]	[illegible]	[illegible]	[illegible]
.40	-.0291	[illegible]	-.0302	.0991	-.0298	.1171	-.0257	.1277	-.0222	[illegible]	[illegible]	[illegible]	[illegible]	[illegible]
.50			-.0349	.0831	-.0371	.1051	-.0345	.1119			[illegible]	[illegible]	[illegible]	[illegible]
.60					-.0396	.1004	.0045	.0723	-.0237	.1038	-.0361	[illegible]	[illegible]	[illegible]
.70	-.0117	.0815	-.0329	.0749	-.0419	.0938	-.0400	.0660	-.0432	.0061	-.0458	[illegible]	[illegible]	-.0366
.80	-.0301	.0027	-.0449	-.0119			-.0421	-.0146	-.0388	-.0242	-.0446	-.0255	-.0458	-.0366
.90	-.0355	-.0209	-.0452	-.0306	-.0313	-.0235	-.0414	-.0265	-.0431	-.0301	-.0444	-.0301		
.95	-.0382	-.0206	-.0445	-.0339			-.0416	-.0303	-.0432	-.0327	-.0442	-.0329		-.0381

TAIL 1

	Cp at y/b of													
	0.02		0.22		0.44		0.56		0.67		0.83		0.98	
x/c	U.S.	L.S.	U.S.	L.S.	U.S.	L.S.	U.S.	L.S.	U.S.	L.S.	U.S.	L.S.	U.S.	L.S.
.05	.0701	.1094	.1760	.1671			.1761	.1529			.1978	.1673	[illegible]	[illegible]
.10	.0709	.0781					.1839	.1805	.1837	.1780			[illegible]	.1677
.15					.1790	.1736	.1821	.1763	.1847	[illegible]			.1731	[illegible]
.20	.0585	.0223					.1793	.1734	.1783	[illegible]			[illegible]	.1473
.25	-.0075	.0092	.0760	.1326	.1776	.1689	.1792	.1696	.1786	.1717	.1763	[illegible]	[illegible]	[illegible]
.30			.0257	.0283			.1747	.1577	.1772	.1675	.18[illegible]	.1747	[illegible]	[illegible]
.40	[illegible]	.0138							.0493	.0441	.1720	[illegible]	[illegible]	[illegible]
.50					.0194	.0153	.0205	.0171	.0256	.0234	[illegible]	[illegible]	.1255	[illegible]
.60	[illegible]	[illegible]	[illegible]	[illegible]			.0149	.0095	[illegible]	[illegible]	.0048	[illegible]	[illegible]	[illegible]
.70					.0076	.0023	-.0190	-.0246	-.0378	-.0356	-.0455	[illegible]	-.0425	[illegible]
.80	-.0426	-.0415	[illegible]	-.0519	-.0454	-.0462	-.0521	-.0508			-.0510	[illegible]		
.90	[illegible]	-.0458	[illegible]	-.0465	-.0457	-.0423	-.0457	-.0413	[illegible]	[illegible]	-.0423	-.0387	-.0395	[illegible]
.95			[illegible]	[illegible]	-.0421	-.0396	-.0428	[illegible]	[illegible]	[illegible]	-.0411	-.0396	[illegible]	[illegible]

TAIL 2

TABLE XV. - CONTINUED

(g) α = 7.80°

	Cp at y/b of													
	0.02		0.22		0.44		0.56		0.67		0.83		0.98	
x/c	U.S.	L.S.	U.S.	L.S.	U.S.	L.S.	U.S.	L.S.	U.S.	L.S.	U.S.	L.S.	U.S.	L.S.
.05			.0015	.3419	.0197	.4220	.0167	.4721		.3703			.0357	[illegible]
.10	-.0155	.1185	-.0045	.4330	.0078	.4520		.4530	.0133	.4324	.0271	.4244	[illegible]	[illegible]
.15	-.0187	.1404	-.0087	.4220	.0029	.4462			.0022	.4352			[illegible]	[illegible]
.20	-.0188	.1355	-.0050	.4035	-.0000	.4355	.0460	.4308	.0056	.4323	[illegible]	.4331	[illegible]	[illegible]
.25	-.0317	.1248			-.0027	.4258	.0064	.4346	.0251	.4292	[illegible]	.4243	[illegible]	[illegible]
.30	-.0359	.1548							.0035	.4243	.0275	.4254	.0057	[illegible]
.40	-.0368	.0952	-.0367	.1221	-.0405	.1433	-.0362	.1631	-.0370	[illegible]	[illegible]	[illegible]	[illegible]	[illegible]
.45			-.0413	.1111	-.0479	.1335	-.0433	.1455			-.0355	[illegible]	[illegible]	[illegible]
.50					-.0488	.1345	-.0044	.1063	-.0394	.1433	-.0470	.1237	-.0354	[illegible]
.70	-.0251	.1093	-.0392	.0937	-.0471	.1253	-.0442	.0980	-.0470	.0355	-.0455	.0075	-.0310	[illegible]
.80	-.0391	.1169	-.0482	.0012			-.0465	.0032	-.0415	-.0073	-.0487	-.0053	-.0500	[illegible]
.90	-.0413	-.0108	-.0492	-.0186	-.0340	-.0128	-.0463	-.0115	-.0470	-.0123	-.0495	-.0113		
.95	-.0444	-.0070	-.0481	-.0217			-.0465	-.0150	-.0472	-.0167	[illegible]	-.0151		-.0373

TAIL 1

	Cp at y/b of													
	0.02		0.22		0.44		0.56		0.67		0.83		0.98	
x/c	U.S.	L.S.	U.S.	L.S.	U.S.	L.S.	U.S.	L.S.	U.S.	L.S.	U.S.	L.S.	U.S.	L.S.
.05	.0577	.0930	.1511	.1500			.1734	.1535			.1443	.1646	.1623	[illegible]
.10	.0612	.0658					.1863	.1917	.1852	.1792			.1735	.1676
.15					.1756	.1710	.1916	.1770	.1966	.1771			[illegible]	.1577
.20	.0526	.0630					.1800	.1734	.1822	.1739			.1663	.1412
.25	-.0091	.0635	.0575	.1140	.1771	.1649	.1765	.1635	.1823	.1725	.1758	.1702	.1617	.1373
.30			.0096	.0176			.1741	.1576	.1781	.1664	.1805	[illegible]	.1504	.1355
.40	-.0125	.0097							.0491	.1435	.1669	.1616	.1501	.1235
.50					.0217	.0151	.0223	.0165	.0258	.0230	[illegible]	[illegible]	.1212	.0857
.60	-.0212	-.0130	-.0202	-.0138			.0172	.0101	.0201	.0101	[illegible]	-.0015	-.0351	[illegible]
.70					.0084	.0035	-.0180	-.0241	-.0378	-.0353	-.0453	-.0455	-.0427	-.0470
.80	-.0509	-.0481	-.0597	-.0571	-.0459	-.0455	-.0519	-.0514			-.0501	-.0450		
.90	-.0578	-.0555	-.0576	-.0555	-.0429	-.0451	-.0479	-.0412	-.0432	-.0421	-.0418	-.0348	-.0354	-.0371
.95			-.0574	-.0550	-.0452	-.0435	-.0442	-.0417	-.0416	-.0391	-.0414	-.0394	-.0415	-.0395

TAIL 2

TABLE IV. - CONTINUED

(h) α = 9.30°

	Cp at y/b of													
	0.02		0.22		0.44		0.56		0.67		0.83		0.98	
x/c	U.S.	L.S.	U.S.	L.S.	U.S.	L.S.	U.S.	L.S.	U.S.	L.S.	U.S.	L.S.	U.S.	L.S.
.05			-.0135	.3736	-.0044	.4841	-.0255	.5451		.4525			[illegible]	[illegible]
.10	-.0221	[illegible]	-.0249	.4921	-.0150	.5217		.5223	.0017	.5057	[illegible]	[illegible]	[illegible]	[illegible]
.15	-.0275	.4119	-.0231	.4834	-.0219	.5116			-.0078	.5112			[illegible]	[illegible]
.20	-.0232	.3862	-.0226	.4393	-.0241	.4945	[illegible]	.4353	-.0135	.5121	-.0215	.2023	[illegible]	[illegible]
.25	-.0378	.3249			-.0258	.4820	-.0151	.3067	-.0154	.5077	-.0345	.3061	[illegible]	[illegible]
.30	-.0377	.3612							-.0175	.4954	-.0372	.3041	[illegible]	[illegible]
.40	-.0432	.1136	-.0421	.1520	-.0506	.1902	-.0474	.2005	-.0499	.2455	-.0316	.4303	[illegible]	[illegible]
.50			-.0472	.1410	-.0552	.1744	-.0382	.1873			-.0412	.2137	[illegible]	[illegible]
.60					-.0533	.1682	-.0420	.1420	-.0476	.1836	-.0545	[illegible]	-.0515	[illegible]
.70	-.0327	.1347	-.0438	.1258	-.0524	.1555	-.0437	.1294	-.0535	.0483	-.0554	.0236	-.0577	-.0162
.80	-.0467	.0276	-.0518	.0196			-.0526	.0196	-.0466	.0135	-.0561	.0132	-.0565	-.0244
.90	-.0487	-.0008	-.0517	-.0024	-.0395	.0010	-.0527	.0037	-.0535	.0059	-.0543	.0114		
.95	-.0500	.0094	-.0517	-.0051			-.0526	-.0015	-.0535	.0002	-.0545	.0033		.0327

TAIL 1

	Cp at y/b of													
	0.02		0.22		0.44		0.56		0.67		0.83		0.98	
x/c	U.S.	L.S.	U.S.	L.S.	U.S.	L.S.	U.S.	L.S.	U.S.	L.S.	U.S.	L.S.	U.S.	L.S.
.05	.0480	.0906	.0804	.0873			.1772	.1537			.1875	.1644	.1627	.1454
.10	.0455	.0566					.1852	.1795	.1863	.1800			.1755	.1649
.15					.1681	.1525	.1827	.1727	.1852	.1777			.1723	.1587
.20	.0373	.0500					.1915	.1708	.1806	.1727			.1684	[illegible]
.25	-.0135	-.0084	.0090	.0507	.1686	.1567	.1924	.1686	.1816	.1700	.1758	.1711	.1645	.1361
.30			-.0221	-.0120			.1765	.1576	.1803	.1669	.1767	.1733	.1554	.1361
.40	-.0212	.0017							.0506	.0432	.1680	.1615	[illegible]	[illegible]
.50					.0126	.0078	.0235	.0160	.0275	.0227	.0410	.0246	.1259	[illegible]
.60	-.0313	-.0251	-.0347	-.0303			.0173	.0095	.0221	.0169	.0044	-.0039	.0358	[illegible]
.70					-.0034	-.0059	-.0169	-.0257	-.0375	-.0366	-.0455	-.0472	[illegible]	[illegible]
.80	-.0557	-.0535	-.0642	-.0622	-.0514	-.0528	-.0532	-.0534			-.0515	-.0479		
.90	-.0615	-.0603	-.0624	-.0611	-.0588	-.0574	-.0538	-.0508	-.0453	-.0425	-.0435	-.0416	[illegible]	[illegible]
.95			-.0622	-.0607	-.0549	-.0533	-.0499	-.0469	-.0436	-.0416	-.0421	-.0404	[illegible]	-.0413

TAIL 2

TABLE XV. - CONTINUED

(i) α = 11.80°

	Cp at y/b of													
	0.02		0.22		0.44		0.56		0.67		0.83		0.98	
x/c	U.S.	L.S.	U.S.	L.S.	U.S.	L.S.	U.S.	L.S.	U.S.	L.S.	U.S.	L.S.	U.S.	L.S.
.05			-.0323	.4012	-.0091	.5880	-.0122	.6324		.6482			[illegible]	[illegible]
.10	-.0393	.1506	-.0381	.5374	-.0213	.5913		.6051	-.0020	.5965	[illegible]	[illegible]	[illegible]	[illegible]
.15	[illegible]	.1692	-.0405	.5092	-.0272	.5810			-.0115	.6006			[illegible]	[illegible]
.20	-.0379	.1515	-.0322	.4864	-.0298	.5605	.0095	.5551	-.0179	.5915	[illegible]	.5948	[illegible]	[illegible]
.25	[illegible]	[illegible]			-.0332	.5437	-.0236	.5758	-.0137	.5925	[illegible]	[illegible]	[illegible]	[illegible]
.30	-.0467	.0732							-.0222	.5734	[illegible]	.4955	[illegible]	[illegible]
.40	-.0493	.1383	-.0440	.1845	-.0538	.2137	-.0485	.2357	-.0504	.3223	[illegible]	.3723	[illegible]	[illegible]
.50			-.0436	.1720	-.0574	.2113	-.0575	.2233			[illegible]	.2715	[illegible]	[illegible]
.60					-.0554	.2214	-.0143	.1814	-.0485	.3303	[illegible]	[illegible]	[illegible]	[illegible]
.70	-.0374	.1691	-.0462	.1576	-.0556	.1893	-.0515	.1636	-.0555	.0832	-.0599	.2317	[illegible]	[illegible]
.80	-.0505	.0373	-.0549	.0405			-.0549	.0372	-.0498	.0324	[illegible]	.0422	[illegible]	[illegible]
.90	-.0536	.0082	-.0551	.0182	-.0412	.0170	-.0545	.0202	-.0574	.0254	-.0590	.0334		
.95	-.0534	.0253	-.0546	.0159			-.0548	.0151	-.0574	.0200	-.0590	.0257		[illegible]

TAIL 1

	Cp at y/b of													
	0.02		0.22		0.44		0.56		0.67		0.83		0.98	
x/c	U.S.	L.S.	U.S.	L.S.	U.S.	L.S.	U.S.	L.S.	U.S.	L.S.	U.S.	L.S.	U.S.	L.S.
.05	.0420	.0834	.0198	.0265			.1631	.1368			.1873	.1578	.1663	.1481
.10	.0395	.0489					.1716	.1607	.1875	.1754			.1819	.1677
.15					.0997	.1014	.1674	.1564	.1822	.1753			.1739	.1595
.20	.0254	.0407					.1650	.1538	.1833	.1715			.1681	.1469
.25	-.0258	-.0141	-.0122	.0156	.0899	.0940	.1643	.1527	.1848	.1703	[illegible]	.1702	.1636	.1380
.30			-.0323	-.0221			.1619	.1437	.1845	.1673	[illegible]	.1718	.1583	.1354
.40	-.0294	-.0028							.0525	.0432	.1702	.1613	.1542	.1252
.50					-.0136	-.0161	.0052	.0037	.0289	.0222	.1433	.0253	.1319	.0903
.60	-.0394	-.0308	-.0416	-.0363			-.0047	-.0066	.0220	.0152	.0075	-.0049	-.0379	-.0403
.70					-.0363	-.0325	-.0335	-.0359	-.0390	-.0377	-.0441	-.0471	-.0430	-.0436
.80	-.0553	-.0560	-.0670	-.0648	-.0616	-.0602	-.0616	-.0599			-.0512	-.0482		
.90	-.0572	-.0653	-.0677	-.0655	-.0664	-.0640	-.0639	-.0609	-.0522	-.0485	-.0447	-.0415	-.0390	-.0376
.95			-.0672	-.0653	-.0637	-.0613	-.0619	-.0591	-.0501	-.0471	-.0428	-.0401	-.0426	-.0412

TAIL 2

TABLE XV - CONTINUED

(j) α = 15.80°

	Cp at y/b of													
	0.02		0.22		0.44		0.56		0.67		0.83		0.98	
x/c	U.S.	L.S.	U.S.	L.S.	U.S.	L.S.	U.S.	L.S.	U.S.	L.S.	U.S.	L.S.	U.S.	L.S.
.05			-.0355	.5303	-.0116	.7959	-.0107	.8516		.7540			.0161	.7606
.10	-.0509	.0068	-.0419	.6635	-.0231	.7687		.8110	-.0037	.8323	.0039	.8024	.0169	.8330
.15	-.0510	.2131	-.0453	.6374	-.0235	.7464			-.0150	.8249			.0015	.8156
.20	-.0516	.1859	-.0377	.5139	-.0324	.7173	.0051	.6957	-.0219	.7988	-.0111	.8293	.0022	.7990
.25	-.0534	.0551			-.0360	.6963	-.0274	.7417	-.0242	.7843	-.0147	.8252	.0042	.7672
.30	-.0558	.1103							-.0266	.7609	-.0172	.8051	.0035	.7335
.40	-.0585	.2120	-.0473	.2596	-.0556	.3012	-.0502	.3194	-.0540	.3639	-.0229	.7532	.0047	.6681
.50			-.0539	.2485	-.0514	.2974	-.0606	.3126			-.0479	.3655	.0023	.5913
.60					-.0604	.2846	-.0189	.2455	-.0519	.3252	-.0502	.3226	-.0643	.0914
.70	-.0420	.2530	-.0492	.2429	-.0534	.2757	-.0561	.2438	-.0591	.1209	-.0623	.1138	-.0663	.0463
.80	-.0545	.0691	-.0580	.0947			-.0583	.0812	-.0524	.0787	-.0626	.0903	-.0674	.0330
.90	-.0578	.0374	-.0592	.0690	-.0436	.0525	-.0584	.0643	-.0605	.0722	-.0621	.0795		
.95	-.0569	.0545	-.0593	.0647			-.0587	.0530	-.0606	.0662	-.0622	.0739		.0139

TAIL 1

	Cp at y/b of													
	0.02		0.22		0.44		0.56		0.67		0.83		0.98	
x/c	U.S.	L.S.	U.S.	L.S.	U.S.	L.S.	U.S.	L.S.	U.S.	L.S.	U.S.	L.S.	U.S.	L.S.
.05	.0103	.0560	.0141	.0208			.0338	.0313			.1777	.1448	.1645	.1470
.10	.0152	.0263					.0315	.0363	.0517	.0733			.1822	.1632
.15					.0155	.0231	.0298	.0346	.0480	.0526			.1730	.1553
.20	.0028	.0163					.0239	.0304	.0412	.0484			.1671	.1424
.25	-.0375	-.0269	-.0256	-.0009	.0043	.0118	.0206	.0274	.0362	.0451	.1487	.1335	.1612	.1329
.30			-.0425	-.0338			.0163	.0203	.0316	.0403	.1454	.1338	.1557	.1257
.40	-.0344	-.0075							-.0276	-.0229	.1294	.1166	.1502	.1199
.50					-.0365	-.0334	-.0383	-.0358	-.0388	-.0360	.0080	.0041	.1312	.0885
.60	-.0427	-.0353	-.0466	-.0416			-.0479	-.0463	-.0407	-.0383	-.0214	-.0245	-.0374	-.0432
.70					-.0493	-.0472	-.0574	-.0570	-.0493	-.0471	-.0554	-.0556	-.0424	-.0438
.80	-.0591	-.0570	-.0694	-.0674	-.0659	-.0647	-.0707	-.0690			-.0611	-.0592		
.90	-.0698	-.0683	-.0702	-.0684	-.0683	-.0662	-.0697	-.0674	-.0606	-.0588	-.0589	-.0572	-.0438	-.0452
.95			-.0699	-.0684	-.0664	-.0644	-.0683	-.0664	-.0615	-.0597	-.0536	-.0584	-.0506	-.0509

TAIL 2

TABLE XV. - CONCLUDED

(k) α = 19.80°

Cp at y/b of

	0.02		0.22		0.44		0.56		0.67		0.83		0.98	
x/c	U.S.	L.S.	U.S.	L.S.	U.S.	L.S.	U.S.	L.S.	U.S.	L.S.	U.S.	L.S.	U.S.	L.S.
.05			-.0344	.7908	-.0297	1.0421	-.0080	1.1350		1.1131			.0367	[illegible]
.10	-.0559	[illegible]	-.0414	.8313	-.0137	.9853		1.0442	.0044	1.0852	.0083	[illegible]	[illegible]	[illegible]
.15	-.0583	.2532	-.0456	.8037	-.0255	.9417			-.0103	1.0433			[illegible]	[illegible]
.20	-.0557	.2334	-.0393	.7755	-.0305	.9016	.0043	.9873	-.0180	1.0133	-.0058	1.0841	[illegible]	[illegible]
.25	-.0572	.0867			-.0344	.8743	-.0255	.9248	-.0209	.9822	-.0103	[illegible]	[illegible]	[illegible]
.30	-.0536	.1642							-.0234	.9446	-.0148	[illegible]	.0048	[illegible]
.40	-.0604	.3115	-.0487	.3649	-.0558	.4073	-.0497	.4152	-.0529	.4604	-.0210	[illegible]	.0040	[illegible]
.50			-.0554	.3487	-.0630	.4008	-.0607	.4234			-.0479	.4697	.0053	[illegible]
.60					-.0621	.3919	-.0222	.3396	-.0518	.4395	-.0607	.4256	-.0348	[illegible]
.70	-.0447	.3469	-.0504	.3614	-.0608	.3859	-.0559	.3327	-.0587	.1989	-.0628	.1743	-.0370	[illegible]
.80	-.0576	.1221	-.0598	.1556			-.0590	.1422	-.0537	.1406	-.0629	.1551	-.0352	[illegible]
.90	-.0606	.0832	-.0607	.1356	-.0444	.1113	-.0588	.1220	-.0621	.1311	-.0627	.1464		
.95	-.0591	.1083	-.0612	.1250			-.0532	.1156	-.0622	.1248	-.0624	.1402		.0531

TAIL 1

Cp at y/b of

	0.02		0.22		0.44		0.56		0.67		0.83		0.98	
x/c	U.S.	L.S.	U.S.	L.S.	U.S.	L.S.	U.S.	L.S.	U.S.	L.S.	U.S.	L.S.	U.S.	L.S.
.05	-.0115	.0209	-.0038	.0012			.0040	.0036			.0779	.0667	.0410	.0444
.10	-.0105	-.0010					.0035	.0071	.0150	.0353			.0412	.0432
.15					-.0055	-.0011	.0019	.0053	.0116	.0153			.0329	.0453
.20	-.0180	-.0093					-.0006	.0028	.0076	.0122			.0277	.0321
.25	-.0469	-.0397	-.0334	-.0149	-.0142	-.0110	-.0016	.0011	.0056	.0098	.0307	.0343	.0229	.0247
.30			-.0474	-.0410			-.0044	-.0041	.0044	.0076	.0257	.0301	.0186	.0220
.40	-.0399	-.0123							-.0379	-.0360	.0194	.0208	.0140	.0142
.50					-.0410	-.0386	-.0445	-.0431	-.0444	-.0431	-.0292	-.0284	.0027	-.0006
.60	-.0448	-.0382	-.0489	-.0445			-.0529	-.0520	-.0447	-.0437	-.0435	-.0437	-.0553	-.0539
.70					-.0509	-.0498	-.0608	-.0607	-.0544	-.0518	-.0625	-.0619	-.0627	-.0522
.80	-.0591	-.0573	-.0707	-.0689	-.0665	-.0655	-.0719	-.0707			-.0663	-.0643		
.90	-.0709	-.0693	-.0719	-.0704	-.0695	-.0677	-.0710	-.0693	-.0638	-.0619	-.0638	-.0620	-.0549	-.0549
.95			-.0716	-.0702	-.0681	-.0661	-.0699	-.0682	-.0656	-.0639	-.0643	-.0627	-.0627	-.0623

TAIL 2

TABLE XVI. - PRESSURE COEFFICIENTS, $\beta = 0°$, $\delta_{2,4} = -15°$, $M = 1.60$

(a) $\alpha = -3.36°$

	Cp at y/b of													
	0.02		0.22		0.44		0.56		0.67		0.83		0.98	
x/c	U.S.	L.S.	U.S.	L.S.	U.S.	L.S.	U.S.	L.S.	U.S.	L.S.	U.S.	L.S.	U.S.	L.S.
.05	.1724	.2048	.3061	.4613	.3836	.5475	.4372	.5804	.5656	.5833				
.10	.1783	.2310	.3758	.4036	.4206	.4836			.4412	.5262	.3650	.5629	.4073	.5337
.15	.1543	.1954	.2780	.3526	.3725	.4352			.3889	.4804			.2572	.4575
.20	.1035	.1648	.2630	.3167	.3348	.3931	.3459	.4176	.3652	.4543	.3685	.4886	.3249	.4086
.25					.3033	.3465	.3257	.3873	.3626	.4249	.3539	.4709	.3169	.3123
.30	.0120	-.0295							.3203	.3845	.3647	.4338	.2508	.2623
.40	.0372	.0446	-.1200	-.1242	-.0943	-.0924	-.0884	-.0846	-.0897	-.0801	.2980	.3384	.1922	.2293
.50			-.0799	-.0925	-.0994	-.0924	-.0985	-.0891			-.0445	-.0931	.0665	.0930
.60					-.0819	-.0826	-.0816	-.0765			-.1360	-.1366	-.3222	-.3138
.70	-.0227	-.0757	-.0566	-.0431	-.0733	-.0927	-.0965	-.1499	-.2928	-.3035	-.3083	-.3255	-.2952	-.3395
.80	-.2411	-.2427	-.2962	-.2790			-.2992	-.3041	-.2993	-.3076	-.3204	-.2958	-.2514	-.2292
.90	-.2559	-.2837	-.3207	-.3163	-.2832	-.2790	-.3046	-.2752	-.2995	-.2945	-.3234	-.2787	-.2516	-.2682
.95	-.2743	-.2916	-.3219	-.3261			-.2987	-.2661	-.2972	-.2759	-.3106	-.2753	-.2518	-.2580

TAIL 1

	Cp at y/b of													
	0.02		0.22		0.44		0.56		0.67		0.83		0.98	
x/c	U.S.	L.S.	U.S.	L.S.	U.S.	L.S.	U.S.	L.S.	U.S.	L.S.	U.S.	L.S.	U.S.	L.S.
.05	.5327	.0057	1.1222	-.3729			1.1423	-.4271					.9597	-.4164
.10	.5552	-.0822					1.0659	-.3969	1.0705	-.4048			.8715	-.4165
.15					.9420	-.3235	.9952	-.3477	1.0213	-.3593	.9739	-.3002	.7881	-.4073
.20	.6476	-.0798					.9185	-.3151	.9536	-.3297			.7274	-.3653
.25	.3790	-.1079	.2964	-.2828	.7845	-.2981	.8429	-.3000	.8798	-.3134	.8927	-.3414	.6703	-.2973
.30			.3524	-.3721			.7482	-.2994	.8102	-.3061	.8338	-.3286	.6078	-.2859
.40	.7164	-.2494							.4954	-.4116	.6554	-.3195	.5146	-.2973
.50					.6525	-.4116	.6498	-.4192	.6475	-.4269	.4293	-.4261	.3293	-.3320
.60	.4718	-.2063	.5853	-.2929			.6052	-.4199	.5796	-.4220	.3459	-.4051	-.1542	-.4828
.70					.4996	-.3988	.1827	-.4008	.0418	-.3947	.0078	-.3868	-.1223	-.4744
.80	-.0905	-.3093	.0295	-.3901	.0371	-.4034	.0217	-.3861			-.0132	-.3756		
.90	.0567	-.3564	.0077	-.3367	.0064	-.3710	.0027	-.3723	-.0053	-.3534	-.0315	-.3743	-.1340	-.4504
.95			-.0013	-.2544	.0009	-.3390	-.0045	-.3591	-.0207	-.3607	-.0451	-.3773	-.1500	-.4420

TAIL 2

TABLE XVI. - CONTINUED

(b) α = -1.35°

	Cp at y/b of													
	0.02		0.22		0.44		0.56		0.67		0.83		0.98	
x/c	U.S.	L.S.	U.S.	L.S.	U.S.	L.S.	U.S.	L.S.	U.S.	L.S.	U.S.	L.S.	U.S.	L.S.
.05	.1664	.1832	.2918	.4465	.3369	.5534	.4353	.6047	.5466	.6028				
.10	.1741	.2102	.3650	.3931	.4187	.4928			.4655	.5431	.3842	.3821	.3510	.5067
.15	.1599	.1902	.2739	.3563	.3830	.4494			.4139	.4964			.2487	.4385
.20	.1210	.1308	.2552	.3251	.3535	.4109	.3668	.4343	.3943	.4667	.3830	.5045	.3013	.3911
.25					.3207	.3655	.3459	.4024	.3553	.4360	.3715	.4856	.2906	.2987
.30	.0466	.0301							.3372	.4001	.3537	.4453	.2285	.2570
.40	.0640	.0671	-.0962	-.1017	-.0853	-.0871	-.0775	-.0784	-.0739	-.0714	.2853	.3396	.1704	.2187
.50			-.0549	-.0701	-.0914	-.0893	-.0903	-.0850			-.0482	-.0354	.1033	.1056
.60					-.0878	-.0935	-.0879	-.0763			-.1455	-.1440	-.3138	-.3026
.70	-.0577	-.0624	-.0447	-.0236	-.0716	-.0855	-.1141	-.1565	-.3017	-.3047	-.3133	-.3322	-.2912	-.3393
.80	-.2439	-.2307	-.2799	-.2722			-.2955	-.3017	-.3113	-.3151	-.3292	-.2992	-.2600	-.2415
.90	-.2234	-.2710	-.3082	-.3106	-.2773	-.2749	-.2994	-.2678	-.3027	-.2874	-.3343	-.2871	-.2655	-.2748
.95	-.2807	-.2788	-.3122	-.3173			-.2935	-.2606	-.3010	-.2757	-.3164	-.2849	-.2550	-.2643

TAIL 1

	Cp at y/b of													
	0.02		0.22		0.44		0.56		0.67		0.83		0.98	
x/c	U.S.	L.S.	U.S.	L.S.	U.S.	L.S.	U.S.	L.S.	U.S.	L.S.	U.S.	L.S.	U.S.	L.S.
.05	.4837	.0183	1.0543	-.3116			1.0995	-.3895					.9310	-.3731
.10	.4903	-.0536					1.0141	-.1355	1.0125	-.3445			.8295	-.3710
.15					.6893	-.2622	.9374	-.2799	.8584	-.2945	.9564	-.2960	.7406	-.3533
.20	.5260	-.0535					.6544	-.2517	.8850	-.2725			.6776	-.2979
.25	.2784	-.0940	.2556	-.2272	.7255	-.2364	.7692	-.2373	.8025	-.2615	.8318	-.2985	.6185	-.2324
.30			.2474	-.3360			.6645	-.2406	.7257	-.2506	.7685	-.2764	.5556	-.2214
.40	.5608	-.2124							.3154	-.3806	.5838	-.2606	.4637	-.2031
.50					.6063	-.3812	.6326	-.3977	.5395	-.3971	.2880	-.3915	.2877	-.2345
.60	.4019	-.1852	.5504	-.2589			.5806	-.3925	.3472	-.3930	.3243	-.3993	-.2305	-.4606
.70					.4728	-.3675	.1632	-.3936	.0297	-.3755	-.0114	-.3840	-.1561	-.4527
.80	-.1030	-.2899	.0093	-.3793	.0170	-.3937	.0044	-.3781			-.0406	-.3736		
.90	-.0207	-.3543	-.0265	-.3236	-.0138	-.3674	-.0217	-.3610	-.0280	-.3397	-.0573	-.3641	-.1543	-.4503
.95			-.0273	-.2387	-.0235	-.3260	-.0301	-.3477	-.0455	-.3472	-.0720	-.3643	-.1703	-.4371

TAIL 2

TABLE XVI. - CONTINUED

(c) α = 0.58°

	Cp at y/b of													
	0.02		0.22		0.44		0.56		0.67		0.83		0.98	
x/c	U.S.	L.S.	U.S.	L.S.	U.S.	L.S.	U.S.	L.S.	U.S.	L.S.	U.S.	L.S.	U.S.	L.S.
.05	.1711	.1847	.2776	.4601	.2997	.5653	.4263	.6215	.4580	.6223				
.10	.1920	.2379	.3679	.4098	.4167	.5046			.4779	.5643	.4214	.6021	.2822	.5133
.15	.1827	.2180	.2793	.3714	.3810	.4636			.4251	.5157			.2602	.4491
.20	.1522	.2037	.2745	.3416	.3609	.4271	.3799	.4553	.4139	.4830	.4274	.5242	.3241	.4028
.25					.3373	.3838	.3588	.4230	.4039	.4518	.3982	.5056	.3034	.3160
.30	.0576	.0300							.3561	.4150	.3718	.4600	.2514	.0723
.40	.0830	.0868	-.0820	-.0837	-.0774	-.0785	-.0683	-.0681	-.0688	-.0608	.2851	.3550	.1918	.2433
.50			-.0458	-.0518	-.0820	-.0833	-.0830	-.0786			-.0473	-.0896	.1129	.1163
.60					-.0760	-.0756	-.0837	-.0719			-.1446	-.1413	-.3064	-.3148
.70	-.0346	-.0409	-.0278	-.0104	-.0663	-.0787	-.1113	-.1508	-.3013	-.3036	-.3107	-.3311	-.2638	-.3125
.80	-.2325	-.2133	-.2677	-.2571			-.3000	-.3011	-.3120	-.3132	-.3265	-.2982	-.2637	-.2450
.90	-.2096	-.2615	-.2914	-.2951	-.2747	-.2628	-.2998	-.2657	-.3116	-.2796	-.3270	-.2868	-.2955	-.2840
.95	-.2690	-.2711	-.2951	-.3038			-.2925	-.2590	-.2971	-.2713	-.3079	-.2849	-.2952	-.2767

TAIL 1

	Cp at y/b of													
	0.02		0.22		0.44		0.56		0.67		0.83		0.98	
x/c	U.S.	L.S.	U.S.	L.S.	U.S.	L.S.	U.S.	L.S.	U.S.	L.S.	U.S.	L.S.	U.S.	L.S.
.05	.4932	.0306	.9747	-.2412			1.0587	-.3388					.9094	-.3421
.10	.4681	-.0175					.9697	-.2600	.9689	-.2772			.7980	-.3295
.15					.8424	-.1948	.8933	-.2107	.9159	-.2299	.9193	-.2700	.7065	-.2874
.20	.4635	-.0259					.8120	-.1872	.8462	-.2093			.6417	-.2224
.25	.1833	-.0918	.2214	-.1525	.6890	-.1749	.7319	-.1760	.7655	-.1935	.7961	-.2309	.5807	-.1737
.30			.1599	-.2896			.6329	-.1819	.6934	-.1844	.7313	-.2152	.5172	-.1542
.40	.4265	-.1796							.1002	-.3452	.5462	-.1976	.4227	-.1331
.50					.3816	-.3443	.3059	-.3510	.2400	-.3628	.0858	-.3584	.2502	-.1584
.60	.2934	-.1655	.4706	-.2190			.4964	-.3582	.4666	-.3651	.0666	-.3854	-.3085	-.4145
.70					.4299	-.3287	.1476	-.4055	.0081	-.3585	-.0764	-.3710	-.2943	-.4064
.80	-.1300	-.2707	-.0187	-.3587	-.0069	-.3842	-.0140	-.3770			-.0651	-.3715		
.90	-.0790	-.3460	-.0589	-.3156	-.0503	-.3564	-.0439	-.3534	-.0463	-.3295	-.0841	-.3620	-.2143	-.4175
.95			-.0675	-.2268	-.0595	-.3065	-.0539	-.3381	-.0634	-.3379	-.0985	-.3561	-.1914	-.4012

TAIL 2

TABLE XVI.- CONTINUED
(d) α = 2.65°

	Cp at y/b of													
	0.02		0.22		0.44		0.56		0.67		0.83		0.98	
x/c	U.S.	L.S.	U.S.	L.S.	U.S.	L.S.	U.S.	L.S.	U.S.	L.S.	U.S.	L.S.	U.S.	L.S.
.05	.1638	.1890	.2778	.4609	.3007	.5797	.4326	.6355	.3550	.6357				
.10	.2062	.2619	.3584	.4171	.4223	.5156			.4932	.5800	.4503	.6132	.2557	[illegible]
.15	.1861	.2349	.2790	.3754	.3885	.4741			.4360	.5326			.2855	[illegible]
.20	.1626	.2243	.2701	.3432	.3676	.4370	.3895	.4696	.4261	.4977	.4551	.5397	.3430	[illegible]
.25					.3417	.3924	.3666	.4361	.4122	.4638	.4191	.5194	.3236	[illegible]
.30	.0531	.0064							.3650	.4264	.3965	.4705	[illegible]	[illegible]
.40	.0903	.0974	-.0760	-.0754	-.0740	-.0740	-.0630	-.0613	-.0602	-.0553	.2915	.3688	.2147	[illegible]
.50			-.0415	-.0450	-.0831	-.0804	-.0824	-.0753			-.0465	-.0853	.1201	[illegible]
.60					-.0774	-.0731	-.0843	-.0691			-.1338	-.1388	-.2976	[illegible]
.70	-.0086	-.0150	-.0084	.0175	-.0653	-.0756	-.1123	-.1475	-.3022	-.3046	-.3087	-.3304	-.2410	-.2813
.80	-.2147	-.1934	-.2531	-.2445			-.3019	-.3002	-.3138	-.3116	-.3253	-.2979	-.2801	[illegible]
.90	-.1953	-.2461	-.2730	-.2795	-.2717	-.2570	-.2993	-.2641	-.3146	-.2758	-.3213	-.2864	-.3122	-.2926
.95	-.2570	-.2570	-.2777	-.2889			-.2899	-.2590	-.2934	-.2633	-.3009	-.2849	-.3170	[illegible]

TAIL 1

	Cp at y/b of													
	0.02		0.22		0.44		0.56		0.67		0.83		0.98	
x/c	U.S.	L.S.	U.S.	L.S.	U.S.	L.S.	U.S.	L.S.	U.S.	L.S.	U.S.	L.S.	U.S.	L.S.
.05	.5325	.0444	.9028	-.1657			1.0120	-.2710					.8806	-.2951
.10	.4752	.0299					.9229	-.1821	.9266	-.2075			.7654	-.2632
.15					.7936	-.1263	.8495	-.1421	.8738	-.1653	.8867	-.2359	.6748	-.2206
.20	.4479	.0017					.7718	-.1215	.8072	-.1457			.6094	-.1533
.25	.1199	-.0897	.1868	-.0654	.6532	-.1074	.6956	-.1124	.7302	-.1296	.7606	-.1628	.5491	-.1219
.30			.0970	-.2513			.6011	-.1194	.6622	-.1211	.6993	-.1419	.4874	-.0917
.40	.3118	-.1045							.0527	-.3092	.5203	-.1295	.3979	-.0806
.50					.2603	-.3018	.2318	-.3153	.1726	-.3268	.0359	-.3260	.2336	-.1205
.60	.2410	-.1473	.3441	-.1784			.2884	-.3229	.2584	-.3295	.0077	-.3657	-.3203	-.3915
.70					.3452	-.2832	.0867	-.3916	-.0809	-.3522	-.1706	-.3618	-.3209	-.3892
.80	-.1632	-.2714	-.0951	-.3394	-.0399	-.3839	-.0533	-.3735			-.1630	-.3715		
.90	-.1269	-.3188	-.0963	-.3190	-.0826	-.3424	-.0760	-.3465	-.0867	-.3255	-.1610	-.3560	-.2740	-.4543
.95			-.1088	-.2437	-.0917	-.2890	-.0776	-.3253	-.1061	-.3306	-.1744	-.3395	-.2705	-.4522

TAIL 2

TABLE XVI. - CONTINUED

(e) α = 4.56°

	Cp at y/b of													
	0.02		0.22		0.44		0.56		0.67		0.83		0.98	
x/c	U.S.	L.S.	U.S.	L.S.	U.S.	L.S.	U.S.	L.S.	U.S.	L.S.	U.S.	L.S.	U.S.	L.S.
.05	.1561	.1953	.2898	.4714	.3076	.6034	.4425	.6577	.2700	.6560				
.10	.2247	.2656	.3578	.4269	.4353	.5378			.5119	.5385	.4492	.5346	[illegible]	.5325
.15	.1902	.2489	.2867	.3672	.4048	.4895			.4514	.5500			[illegible]	[illegible]
.20	.1599	.2322	.2783	.3540	.3837	.4504	.3937	.4846	.4426	.5147	.4552	.5534	.3542	.4315
.25					.3526	.4027	.3783	.4465	.4203	.4810	.4237	.5338	.3329	.3552
.30	.0317	-.0156							.3711	.4459	.4130	.4815	.2957	.3123
.40	.0637	.0916	-.0866	-.0827	-.0710	-.0722	-.0550	-.0530	-.0532	-.0445	.3009	.3791	.2395	.2836
.50			-.0595	-.0522	-.0839	-.0801	-.0814	-.0708			-.0544	-.0906	[illegible]	[illegible]
.60					-.0858	-.0767	-.0833	-.0670			-.1355	-.1360	-.2943	-.2947
.70	.0215	.0096	.0104	.0344	-.0870	-.0839	-.1112	-.1453	-.2933	-.3058	-.3032	-.3298	[illegible]	-.2523
.80	-.1968	-.1763	-.2410	-.2289			-.3044	-.3048	-.3141	-.3120	-.3218	-.2997	-.2816	-.2369
.90	-.1762	-.2289	-.2554	-.2645	-.2749	-.2604	-.3085	-.2717	-.3161	-.2749	-.3133	-.2863	-.3303	-.3067
.95	-.2403	-.2400	-.2610	-.2739			-.2910	-.2639	-.2936	-.2705	-.2951	-.2949	-.3345	-.3070

TAIL 1

	Cp at y/b of													
	0.02		0.22		0.44		0.56		0.67		0.83		0.98	
x/c	U.S.	L.S.	U.S.	L.S.	U.S.	L.S.	U.S.	L.S.	U.S.	L.S.	U.S.	L.S.	U.S.	L.S.
.05	.5559	.0697	.8307	-.0720			.9583	-.1874					.8521	-.2480
.10	.4750	.0818					.8706	-.0972	.8778	-.1309			.7299	-.2098
.15					.7452	-.0475	.7991	-.0621	.8260	-.0891	.8464	-.1157	.6420	-.1437
.20	.4380	.0496					.7255	-.0377	.7647	-.0677			.5756	-.0779
.25	.0926	-.0845	.1618	.0025	.5146	-.0261	.6549	-.0303	.6908	-.0504	.7239	-.0750	.5166	-.0424
.30			.0493	-.2203			.5676	-.0437	.6273	-.0416	.6634	-.0538	.4562	-.0273
.40	.2300	-.0881							.0292	-.2641	.4922	-.0701	.3714	-.0270
.50					.1754	-.2488	.1617	-.2697	.1115	-.2831	.0061	-.2924	.2155	-.0653
.60	.1827	-.1265	.2598	-.1288			.1959	-.2729	.1694	-.2870	-.0363	-.3339	-.3294	-.3755
.70					.2435	-.2410	-.0114	-.3584	-.1359	-.3600	-.2150	-.3556	-.3223	-.3683
.80	-.2062	-.2961	-.1313	-.3206	-.0949	-.3610	-.1181	-.3611			-.2133	-.3626		
.90	-.1674	-.2885	-.1576	-.3295	-.1168	-.3419	-.1279	-.3375	-.1577	-.3312	-.2150	-.3584	-.2910	-.4214
.95			-.1551	-.2922	-.1139	-.2962	-.1341	-.3123	-.1727	-.3324	-.2251	-.3330	-.2995	-.4139

TAIL 2

TABLE XVI. - CONTINUED

(f) α = 6.66°

	Cp at y/b of													
	0.02		0.22		0.44		0.56		0.67		0.83		0.98	
x/c	U.S.	L.S.	U.S.	L.S.	U.S.	L.S.	U.S.	L.S.	U.S.	L.S.	U.S.	L.S.	U.S.	L.S.
.05	.1571	.2034	.3077	.4955	.3455	.6311	.4569	.6781	.2307	.6633				
.10	.2436	.3080	.3665	.4470	.4663	.5555			.5342	.6141	.4550	.5515	[illegible]	.5527
.15	.2037	.2633	.3003	.4074	.4285	.5049			.4555	.5676			.3103	.5063
.20	.1685	.2464	.2933	.3707	.3924	.4602	.4109	.4984	.4530	.5328	.4606	.5785	[illegible]	[illegible]
.25					[illegible]	.4153	.3914	.4630	.4259	.5017	.4443	.5512	.3440	.3721
.30	.0196	-.0180							.3784	.4667	.4240	.4949	.3185	.3310
.40	.0523	.0804	-.0929	-.0893	-.0643	-.0646	-.0505	-.0411	-.0435	-.0340	.3100	.3863	.2660	.3085
.50			-.0848	-.0579	-.0812	-.0723	-.0781	-.0612			-.0544	-.0749	.1374	.1397
.60					-.0832	-.0737	-.0730	-.0613			-.1275	-.1327	-.2633	-.2934
.70	.0486	.0294	.0298	.0221	-.0862	-.0863	-.1022	-.1403	-.2948	-.3045	-.2968	-.3274	-.1927	-.2274
.80	-.1811	-.1625	-.2309	-.2158			-.2999	-.3043	-.3115	-.3067	-.3157	-.2958	-.2673	-.2236
.90	-.1539	-.2118	-.2397	-.2476	-.2924	-.2607	-.3086	-.2725	-.3148	-.2594	-.3019	-.2940	-.3404	-.3139
.95	-.2241	-.2224	-.2452	-.2582			-.2907	-.2631	-.2957	-.2656	-.2857	-.2835	-.3456	-.3174

TAIL 1

	Cp at y/b of													
	0.02		0.22		0.44		0.56		0.67		0.83		0.98	
x/c	U.S.	L.S.	U.S.	L.S.	U.S.	L.S.	U.S.	L.S.	U.S.	L.S.	U.S.	L.S.	U.S.	L.S.
.05	.4158	.0828	.7303	.0412			.8937	-.0938					.8192	-.1809
.10	.4161	.1211					.9068	.0055	.8173	-.0412			.6948	-.1251
.15					.6838	.0607	.7420	.0410	.7724	.0017	.3003	-.1016	.6056	-.0524
.20	.3868	.1062					.5760	.0663	.7141	.0262			.5408	.0506
.25	.0741	-.0587	.1367	.0564	.5710	.0764	.6120	.0693	.6475	.0576	.6836	.0165	.4831	.0341
.30			.0102	-.1862			.5316	.0550	.5888	.0651	.6300	.0307	.4257	.0395
.40	.1806	-.1266							.0069	-.2098	.4696	.0151	.3447	.0463
.50					.1042	-.2114	.0955	-.2149	.0571	-.2304	-.0159	-.2332	.1969	-.0035
.60	.1233	-.1076	.1777	-.0796			.1187	-.2257	.0965	-.2370	-.0711	-.2917	-.3335	-.3495
.70					.1298	-.1787	-.0745	-.3342	-.1788	-.3736	-.2494	-.3462	-.3135	-.3390
.80	-.2284	-.2853	-.1543	-.3112	-.1426	-.3217	-.1793	-.3443			-.2530	-.3394		
.90	-.1891	-.2678	-.1904	-.3284	-.1628	-.3228	-.1829	-.3273	-.2047	-.3195	-.2571	-.3333	-.2894	-.3808
.95			-.1914	-.2885	-.1614	-.2934	-.1832	-.3049	-.2230	-.3153	-.2657	-.3184	-.2881	-.3582

TAIL 2

TABLE XVI. - CONTINUED

(g) α = 3.06°

	Cp at y/b of													
	0.02		0.22		0.44		0.56		0.67		0.83		0.98	
x/c	U.S.	L.S.	U.S.	L.S.	U.S.	L.S.	U.S.	L.S.	U.S.	L.S.	U.S.	L.S.	U.S.	L.S.
.05	.1659	.2198	.3283	.5263	.3774	.6506	.4684	.6867	.2046	.6761				
.10	.2587	.3345	.3866	.4713	.4708	.5685			.5451	.6386	.4671	.6726	.3481	.5721
.15	.2178	.2844	.3233	.4214	.4315	.5168			.4734	.5937			.3370	.5251
.20	.1831	.2629	.3121	.3800	.3974	.4767	.4130	.5182	.4603	.5578	.4757	.5933	.3847	.4613
.25					.3677	.4332	.3973	.4892	.4330	.5240	.4629	.5550	.3651	.3891
.30	.0191	-.0158							.3900	.4849	.4405	.5038	.3518	.3497
.40	.0464	.0761	-.0971	-.0587	-.0537	-.0550	-.0415	-.0323	-.0294	-.0259	.3345	.3950	.2994	.3308
.50			-.0944	-.0691	-.0726	-.0977	-.0641	-.0558			-.0416	-.0663	.1312	.1346
.60					-.0731	-.0707	-.0565	-.0554			-.1197	-.1271	-.2583	-.2714
.70	.0776	.0320	.0493	-.0050	-.0803	-.0834	-.0931	-.1364	-.2887	-.3024	-.2926	-.3231	-.1701	-.2102
.80	-.1618	-.1442	-.2167	-.1994			-.2958	-.3009	-.3097	-.3001	-.3096	-.2952	-.2405	-.2242
.90	-.1357	-.1899	-.2242	-.2276	-.3021	-.2564	-.3070	-.2646	-.3132	-.2646	-.2914	-.2818	-.3491	-.3184
.95	-.2042	-.2022	-.2312	-.2380			-.2847	-.2575	-.2969	-.2618	-.2791	-.2808	-.3531	-.3258

TAIL 1

	Cp at y/b of													
	0.02		0.22		0.44		0.56		0.67		0.83		0.98	
x/c	U.S.	L.S.	U.S.	L.S.	U.S.	L.S.	U.S.	L.S.	U.S.	L.S.	U.S.	L.S.	U.S.	L.S.
.05	.2119	.0938	.6019	.1491			.3051	.0051					.7752	-.0984
.10	.3314	.1490					.7279	.1438	.7441	.0780			.6496	-.0372
.15					.6086	.1714	.6712	.1822	.7064	.1297	.7533	.0042	.5614	.0760
.20	.3210	.1657					.6156	.1969	.6535	.1748			.4955	.1280
.25	.0478	-.0080	.1095	.1059	.5194	.1580	.5622	.1758	.5965	.1912	.6434	.1356	.4415	.1159
.30			-.0268	-.1552			.4894	.1459	.5429	.1679	.5923	.1520	.3885	.1262
.40	.1433	-.0285							-.0144	-.1644	.4437	.1403	.3135	.1217
.50					.0428	-.1737	.0373	-.1758	.0110	-.1864	-.0384	-.1755	.1764	.0524
.60	.0699	-.0728	.1100	-.0382			.0496	-.1909	.0352	-.1922	-.1061	-.2510	-.3272	-.3143
.70					.0402	-.0974	-.1221	-.3061	-.2167	-.3557	-.2776	-.3525	-.3119	-.2892
.80	-.2495	-.2762	.1743	-.2856	-.1970	-.2810	-.2253	-.3317			-.2859	-.3224		
.90	-.1908	-.2509	-.2108	-.3142	-.1974	-.3043	-.2340	-.3085	-.2441	-.3045	-.2871	-.3164	-.2709	-.3613
.95			-.2110	-.2779	-.1941	-.2880	-.2291	-.2815	-.2656	-.2998	-.2865	-.3026	-.2502	-.3341

TAIL 2

TABLE XVI. - CONTINUED

(h) $\alpha = 10.65°$

	Cp at y/b of													
	0.02		0.22		0.44		0.56		0.67		0.83		0.98	
x/c	U.S.	L.S.	U.S.	L.S.	U.S.	L.S.	U.S.	L.S.	U.S.	L.S.	U.S.	L.S.	U.S.	L.S.
.05	.1829	.2471	.3509	.5484	.3794	.6712	.4504	.7169	.1686	.6995				
.10	.2808	.3555	.3963	.4873	.4788	.5905			.5512	.6592	.5004	.6908	.2785	.5905
.15	.2318	.2977	.3248	.4399	.4412	.5404			.5027	.6094			.3893	.5434
.20	.1853	.2734	.3119	.3963	.4115	.4972	.4370	.5393	.4889	.5715	.5044	.6069	.4017	.4787
.25					.3855	.4513	.4269	.5022	.4620	.5375	.4827	.5727	.3851	.4138
.30	.0212	-.0059							.4259	.4995	.4578	.5146	.3715	.3774
.40	.0510	.0866	-.0888	-.0880	-.0424	-.0481	-.0289	-.0239	-.0175	-.0162	.3465	.4064	.3165	.3600
.50			-.0902	-.0773	-.0594	-.0534	-.0500	-.0462			-.0464	-.0623	.1325	.1330
.60					-.0678	-.0621	-.0468	-.0472			-.1146	-.1210	-.2471	-.2565
.70	.1065	.0788	.0460	-.0195	-.0754	-.0766	-.0889	-.1345	-.2836	-.2988	-.2878	-.3178	-.1694	-.1872
.80	-.1399	-.1209	-.1976	-.1841			-.2915	-.2973	-.3025	-.2952	-.3024	-.2978	-.2301	-.2109
.90	-.1136	-.1663	-.2120	-.2076	-.2984	-.2513	-.3012	-.2595	-.3081	-.2610	-.2839	-.2782	-.3585	-.3304
.95	-.1820	-.1793	-.2174	-.2172			-.2762	-.2534	-.2963	-.2585	-.2727	-.2755	-.3549	-.3345

TAIL 1

	Cp at y/b of													
	0.02		0.22		0.44		0.56		0.67		0.83		0.98	
x/c	U.S.	L.S.	U.S.	L.S.	U.S.	L.S.	U.S.	L.S.	U.S.	L.S.	U.S.	L.S.	U.S.	L.S.
.05	.1352	.1025	.4744	.2580			.6948	.1561					.7070	.0137
.10	.2595	.1891					.6267	.3257	.6428	.2483			.5928	.1026
.15					.5141	.2673	.5798	.3017	.6178	.3284	.7076	.1449	.5063	.2342
.20	.2349	.2169					.5356	.2729	.5768	.2907			.4427	.2602
.25	-.0149	.0370	.0700	.1542	.4573	.2296	.4948	.2524	.5363	.2684	.5894	.3122	.3929	.2520
.30			-.0671	-.1203			.4370	.2066	.4952	.2436	.5447	.2979	.3458	.2344
.40	.0542	.0285							-.0341	-.1215	.4110	.2133	.2821	.1856
.50					-.0146	-.1218	-.0123	-.1397	-.0259	-.1440	-.0586	-.1420	.1610	.0687
.60	.0151	-.0481	.0282	.0036			-.0080	-.1413	-.0133	-.1487	-.1340	-.2243	-.3159	-.3079
.70					-.0312	-.0142	-.1677	-.2529	-.2508	-.3303	-.3014	-.3475	-.3179	-.2513
.80	-.2648	-.2608	-.2027	-.2655	-.2490	-.2610	-.2643	-.2883			-.3094	-.3084		
.90	-.1808	-.2309	-.2231	-.3012	-.2405	-.2809	-.2608	-.2717	-.2778	-.2864	-.2888	-.3061	-.2550	-.3506
.95			-.2256	-.2686	-.2228	-.2712	-.2360	-.2661	-.2863	-.2863	-.2760	-.2972	-.2537	-.3427

TAIL 2

TABLE XVI. - CONTINUED
(i) α = 12.65°

	Cp at y/b of													
	0.02		0.22		0.44		0.56		0.67		0.83		0.98	
x/c	U.S.	L.S.	U.S.	L.S.	U.S.	L.S.	U.S.	L.S.	U.S.	L.S.	U.S.	L.S.	U.S.	L.S.
.05	.1891	.2661	.3507	.5760	.4029	.7018	.4839	.7404	.2087	.7242				
.10	.2866	.3838	.4016	.5088	.5056	.6173			.5691	.6882	.5213	.7144	.3204	.6082
.15	.2384	.3243	.3439	.4578	.4781	.5622			.5343	.6382			.4131	.5706
.20	.1925	.2957	.3374	.4123	.4421	.5227	.4638	.5529	.5038	.6014	.5274	.6241	.4163	.5077
.25					.4083	.4746	.4413	.5302	.4772	.5661	.5010	.5881	.3977	.4445
.30	.0293	-.0007							.4439	.5257	.4734	.5294	.3865	.4109
.40	.0564	.0921	-.0776	-.0806	-.0374	-.0371	-.0225	-.0134	.0020	-.0062	.3622	.4243	.3338	.3916
.50			-.0843	-.0730	-.0538	-.0485	-.0371	-.0367			-.0487	-.0536	.1315	.1267
.60					-.0616	-.0526	-.0348	-.0409			-.1140	-.1131	-.2366	-.2462
.70	.1400	.1165	.0325	-.0206	-.0673	-.0680	-.0824	-.1099	-.2830	-.2954	-.2899	-.3126	-.1729	-.1741
.80	-.1193	-.0953	-.1822	-.1850			-.2895	-.2932	-.2999	-.2977	-.3022	-.2985	-.2529	-.1958
.90	-.0936	-.1438	-.1945	-.1912	-.2817	-.2467	-.2972	-.2560	-.3078	-.2600	-.2811	-.2754	-.3709	-.3402
.95	-.1532	-.1565	-.1960	-.1956			-.2684	-.2496	-.2965	-.2569	-.2698	-.2720	-.3533	-.3472

TAIL 1

	Cp at y/b of													
	0.02		0.22		0.44		0.56		0.67		0.83		0.98	
x/c	U.S.	L.S.	U.S.	L.S.	U.S.	L.S.	U.S.	L.S.	U.S.	L.S.	U.S.	L.S.	U.S.	L.S.
.05	.0598	.1120	.3435	.3606			.5450	.4302					.5897	.2542
.10	.1788	.2204					.4788	.4173	.5299	.4385			.5162	.3957
.15					.3941	.3549	.4572	.3781	.5103	.4208	.6377	.3213	.4384	.3484
.20	.1263	.2824					.4262	.3516	.4832	.3847			.3816	.2941
.25	-.1144	.1030	.0149	.2150	.3596	.3011	.4057	.3320	.4575	.3545	.5109	.3811	.3431	.2495
.30			-.1118	-.0686			.3706	.2809	.4281	.3286	.4822	.3622	.3097	.2325
.40	-.0218	-.0044							-.0575	-.0887	.3729	.2563	.2652	.1925
.50					-.0665	-.0607	-.0575	-.0861	-.0656	-.1057	-.0786	-.1156	.1562	.0664
.60	-.0185	-.0155	-.0378	.0199			-.0628	-.0834	-.0607	-.1013	-.1585	-.2080	-.3160	-.3061
.70					-.0897	.0362	-.2108	-.1921	-.2818	-.3024	-.3235	-.3351	-.3357	-.2609
.80	-.2871	-.2398	-.2278	-.2468	-.2897	-.2369	-.2972	-.2363			-.2983	-.2994		
.90	-.1556	-.2107	-.2421	-.2853	-.2612	-.2639	-.2640	-.2456	-.2696	-.2730	-.2809	-.2917	-.2618	-.3271
.95			-.2488	-.2566	-.2506	-.2594	-.2577	-.2548	-.2707	-.2748	-.2795	-.2872	-.2625	-.3068

TAIL 2

TABLE XVI. - CONTINUED

(j) α = 15.00°

Cp at y/b of

	0.02		0.22		0.44		0.56		0.67		0.83		0.98	
x/c	U.S.	L.S.	U.S.	L.S.	U.S.	L.S.	U.S.	L.S.	U.S.	L.S.	U.S.	L.S.	U.S.	L.S.
.05	.2351	.3224	.4266	.6360	.4593	.7602	.5314	.8062	.2202	.7787				
.10	.3399	.4309	.4496	.5620	.5569	.6729			.5791	.7395	.5294	.7463	.3505	.5914
.15	.2923	.3660	.3978	.5088	.5299	.6168			.5795	.6878			.4123	.5542
.20	.2373	.3347	.3829	.4612	.4891	.5721	.5049	.6051	.5399	.6467	.5345	.6458	.4196	.5427
.25					.4537	.5206	.4862	.5787	.5146	.6053	.5001	.6047	.3977	.4866
.30	.0647	.0326							.4853	.5611	.4308	.5453	.4023	.4538
.40	.0364	.1353	-.0554	-.0619	-.0153	-.0177	-.0035	.0079	.0087	.0069	.3758	.4439	.3813	.4413
.50			-.0692	-.0545	-.0371	-.0295	-.0218	-.0221			-.0336	-.0406	.1224	.1133
.60					-.0468	-.0364	-.0232	-.0290			-.1104	-.0973	-.2009	-.2200
.70	.2011	.1869	.0213	.0029	-.0606	-.0548	-.0797	-.1231	-.2772	-.2889	-.2830	-.3014	-.1649	-.1505
.80	-.0788	-.0482	-.1764	-.1693			-.2863	-.2813	-.2931	-.2915	-.2863	-.2858	-.3218	-.1705
.90	-.0520	-.1008	-.1692	-.1668	-.2840	-.2340	-.2900	-.2435	-.2975	-.2527	-.2649	-.2638	-.3728	-.3502
.95	-.0941	-.1081	-.1729	-.1652			-.2620	-.2395	-.2914	-.2498	-.2548	-.2532	-.3532	-.3496

TAIL 1

Cp at y/b of

	0.02		0.22		0.44		0.56		0.67		0.83		0.98	
x/c	U.S.	L.S.	U.S.	L.S.	U.S.	L.S.	U.S.	L.S.	U.S.	L.S.	U.S.	L.S.	U.S.	L.S.
.05	-.0727	.1158	.1106	.4838			.1871	.6463					.1430	.6075
.10	.0263	.2851					.2615	.5985	.2703	.6105			.2628	.5402
.15					.1909	.5207	.2511	.5519	.2831	.5755	.4815	.4831	.2895	.4320
.20	-.0756	.4197					.2341	.5041	.2674	.5185			.2817	.3618
.25	-.2851	.2011	-.0911	.3116	.1764	.4312	.2159	.4553	.2504	.4803	.3037	.5247	.2520	.2967
.30			-.1924	.0448			.1950	.3670	.2397	.4283	.2878	.4873	.2207	.2561
.40	-.1155	-.0227							-.1369	-.0442	.2457	.3325	.1900	.1928
.50					-.1592	.1059	-.1527	-.0028	-.1574	-.0385	-.1337	-.0726	.1015	.0454
.60	-.0715	.0341	-.1444	.0981			-.1601	.1035	-.1570	-.0134	-.2120	-.1631	-.3263	-.3232
.70					-.1922	.1038	-.2819	-.0837	-.3405	-.2019	-.3544	-.3096	-.3130	-.3324
.80	-.3066	-.2065	-.2624	-.2063	-.3137	-.1947	-.3235	-.1904			-.3158	-.3132		
.90	-.1721	-.1969	-.2857	-.2577	-.3134	-.2147	-.3190	-.2035	-.3047	-.1910	-.3090	-.2988	-.3489	-.2701
.95			-.2867	-.2439	-.3089	-.2183	-.3106	-.2106	-.3097	-.2155	-.3043	-.2922	-.3324	-.2632

TAIL 2

TABLE XVI. - CONCLUDED

(k) α = 18.66°

	Cp at y/b of													
	0.02		0.22		0.44		0.56		0.67		0.83		0.98	
x/c	U.S.	L.S.	U.S.	L.S.	U.S.	L.S.	U.S.	L.S.	U.S.	L.S.	U.S.	L.S.	U.S.	L.S.
.05	.2643	.3529	.4401	.6670	.4897	.7911	.5706	.8334	.2305	.8097				
.10	.3680	.4606	.4789	.5913	.5920	.7027			.5888	.7656	.5494	.7654	.3816	.5770
.15	.3160	.3977	.4316	.5353	.5582	.6461			.5946	.7116			.4436	.6277
.20	.2610	.3627	.4091	.4860	.5133	.5996	.5263	.6388	.5538	.6691	.5554	.6645	.4550	.5786
.25					.4752	.5494	.4996	.6006	.5345	.6288	.5119	.6223	.4353	.5264
.30	.0851	.0522							.5089	.5818	.5016	.5631	.4469	.4927
.40	.1187	.1585	-.0410	-.0464	-.0081	-.0073	.0071	.0182	.0133	.0148	.4036	.4602	.4125	.4778
.50			-.0570	-.0377	-.0297	-.0207	-.0111	-.0148			-.0101	-.0316	.1333	.1291
.60					-.0375	-.0291	-.0202	-.0228			-.1032	-.0897	-.2041	-.2092
.70	.2182	.2116	.0197	.0116	-.0531	-.0503	-.0692	-.1205	-.2653	-.2878	-.2819	-.2966	-.1646	-.1475
.80	-.0674	-.0316	-.1805	-.1671			-.2818	-.2713	-.2881	-.2894	-.2827	-.2820	-.3623	-.1860
.90	-.0805	-.0835	-.1607	-.1523	-.2829	-.2285	-.2892	-.2381	-.2965	-.2510	-.2606	-.2511	-.3760	-.3515
.95	-.0710	-.0820	-.1542	-.1457			-.2592	-.2350	-.2920	-.2479	-.2483	-.2556	-.3573	-.3493

TAIL 1

	Cp at y/b of													
	0.02		0.22		0.44		0.56		0.67		0.83		0.98	
x/c	U.S.	L.S.	U.S.	L.S.	U.S.	L.S.	U.S.	L.S.	U.S.	L.S.	U.S.	L.S.	U.S.	L.S.
.05	-.1361	.1149	-.0016	.5237			.0299	.7126					-.0820	.7011
.10	-.0407	.3328					.1166	.6567	.1091	.6766			.0807	.5830
.15					.0949	.5707	.1339	.6042	.1461	.6350	.3243	.6034	.1244	.4756
.20	-.1860	.4802					.1331	.5516	.1535	.5735			.1520	.3945
.25	-.3260	.2176	-.1330	.3464	.0825	.4633	.1208	.4972	.1522	.5247	.1792	.5635	.1532	.3244
.30			-.2205	.0960			.1031	.3977	.1433	.4624	.1766	.5198	.1465	.2766
.40	-.1742	-.0388							-.1764	-.0246	.1489	.3515	.1389	.2023
.50					-.2025	.2126	-.2051	.0710	-.2077	.0082	-.1747	-.0527	.0741	.0409
.60	-.0953	.0701	-.1773	.1363			-.2089	.2121	-.2140	.0676	-.2482	-.1379	-.3291	-.3201
.70					-.2307	.1420	-.3123	-.0629	-.3744	-.1199	-.3654	-.2833	-.2851	-.3210
.80	-.3139	-.1910	-.2889	-.1812	-.3291	-.1637	-.3395	-.1680			-.3391	-.2583		
.90	-.1897	-.2012	-.3118	-.2390	-.3329	-.1916	-.3319	-.1823	-.3279	-.1734	-.3337	-.2545	-.3393	-.2440
.95			-.3042	-.2401	-.3270	-.1988	-.3179	-.1878	-.3319	-.1935	-.3274	-.2448	-.3553	-.2381

TAIL 2

TABLE XVII. - PRESSURE COEFFICIENTS, $\phi = 0°$, $\delta_{2,4} = -15°$, $M = 2.36$

(a) $\alpha = -4.08°$

	Cp at y/b of													
	0.02		0.22		0.44		0.56		0.67		0.83		0.98	
x/c	U.S.	L.S.	U.S.	L.S.	U.S.	L.S.	U.S.	L.S.	U.S.	L.S.	U.S.	L.S.	U.S.	L.S.
.05			.2174	.3023	.1809	.2724	.1750	.3033					.1350	
.10	.1043	.1120	.1979	.2954	.2053	.3005			.2159	.3013	.2072	.3034	[illegible]	.2994
.15	.0987	.1108	.1916	.2734	.2076	.2835			.2031	.3023			[illegible]	[illegible]
.20	.0841	.1019	.1812	.2570	.2044	.2894	.2037	.2965	.2057	.2933	.2109	.2971	[illegible]	[illegible]
.25	-.0206	-.0308			.1996	.2849	.2023	.2905	.2090	.2932	.2101	.2965	.1554	.2255
.30	-.0082	-.0150							.2051	.2881	[illegible]	.2921	.1391	[illegible]
.40	.0037	.0133	-.0268	-.0193	-.0005	.0218	.0062	.0345	.0127	.0433	.2002	.2841	.1245	.1985
.50			-.0354	-.0316	-.0102	.0117	-.0057	.0215			.0124	.0362	[illegible]	.1530
.60					-.0132	.0057	.0056	.0260	-.0073	.0233	-.0156	.0045	-.1393	-.1354
.70	-.0438	-.0105	-.0282	-.0229	-.0204	-.0030	-.0350	-.0314	-.1253	-.1142	-.1353	-.1233	-.1421	-.1333
.80	-.1328	-.1109	-.1339	-.1262			-.1462	-.1355	-.1435	-.1357	-.1382	-.1342	-.1321	-.1350
.90	-.1259	-.1198	-.1501	-.1442	-.1340	-.1482	-.1356	-.1439	-.1219	-.1347	-.1183	-.1282		
.95	-.1285	-.1183	-.1407	-.1460			-.1271	-.1330	-.1173	-.1230	-.1144	-.1172		-.1141

TAIL 1

	Cp at y/b of													
	0.02		0.22		0.44		0.56		0.67		0.83		0.98	
x/c	U.S.	L.S.	U.S.	L.S.	U.S.	L.S.	U.S.	L.S.	U.S.	L.S.	U.S.	L.S.	U.S.	L.S.
.05	.4537	-.0298	1.0466	-.1047			1.1322	-.1388			1.1895	-.1393	1.2338	-.1494
.10	.3728	-.0529					1.0406	-.1015	1.0371	-.1045			1.0124	-.1070
.15					.9419	-.0943	.9746	-.0981	.9942	-.0989			.8975	-.0808
.20	.4741	-.0462					.9150	-.0988	.9422	-.0973			.8422	-.0677
.25	.2294	-.0543	.3872	-.1149	.8189	-.1055	.8501	-.1002	.8804	-.0975	.9424	-.0876	.7967	-.0656
.30			.3260	-.1816			.7707	-.1074	.8238	-.1000	.9044	-.0941	.7327	-.0644
.40	.4418	-.0869							.2875	-.1741	.7560	-.1037	.6350	-.0648
.50					.3962	-.1777	.3870	-.1784	.3706	-.1839	.2952	-.1762	.4681	-.0865
.60	.3756	-.1061	.3914	-.1766			.4136	-.1765	.4048	-.1710	.2588	-.1718	-.0449	-.1844
.70					.3764	-.1624	.2136	-.1695	.1093	-.1653	.0764	-.1679	-.0481	-.1786
.80	.0506	-.1489	.0919	-.1920	.0948	-.1738	.0939	-.1703			.0688	-.1681		
.90	.0385	-.1729	.0828	-.1778	.0763	-.1762	.0753	-.1710	.0811	-.1628	.0563	-.1680	-.0340	-.1610
.95			.0830	-.1705	.0674	-.1735	.0679	-.1706	.0709	-.1662	.0488	-.1685	-.0447	-.1744

TAIL 2

TABLE XVII. - CONTINUED

(b) α = -2.08°

	Cp at y/b of													
	0.02		0.22		0.44		0.56		0.67		0.83		0.98	
x/c	U.S.	L.S.	U.S.	L.S.	U.S.	L.S.	U.S.	L.S.	U.S.	L.S.	U.S.	L.S.	U.S.	L.S.
.05	.		.2252	.3043	.1852	.2762	.1820	.3111					.2458	
.10	.0895	.1118	.2006	.2980	.2099	.3045			.2204	.3044	.2127	.3129	.2267	.3010
.15	.0876	.1111	.1994	.2746	.2126	.2888			.2065	.3059			.1813	.2451
.20	.0769	.1049	.1757	.2530	.2094	.2940	.2009	.2910	.2078	.3009	.2127	.2983	.1726	.2350
.25	-.0094	-.0196			.2043	.2894	.2056	.2932	.2106	.2958	.2119	.2955	.1545	.2222
.30	.0051	-.0010							.2069	.2891	.2122	.2904	.1395	.2066
.40	.0216	.0343	-.0356	-.0234	-.0013	.0212	.0070	.0357	.2129	.0554	.2037	.2844	.1299	.1855
.50			-.0419	-.0315	-.0131	.0086	-.0048	.0220			.0116	.0374	.1134	.1638
.60					-.0180	.0022	-.0032	.0208	-.0067	.0252	-.0192	.0059	-.1363	-.1325
.70	-.0437	-.0124	-.0191	-.0114	-.0273	-.0068	-.0329	-.0339	-.1263	-.1147	-.1354	-.1241	-.1407	-.1347
.80	-.1202	-.1041	-.1294	-.1179			-.1463	-.1370	-.1424	-.1355	-.1326	-.1352	-.1285	-.1370
.90	-.1176	-.1108	-.1486	-.1406	-.1295	-.1469	-.1319	-.1438	-.1206	-.1350	-.1155	-.1263		
.95	-.1211	-.1135	-.1413	-.1462			-.1247	-.1316	-.1162	-.1233	-.1137	-.1165		-.1081

TAIL 1

	Cp at y/b of													
	0.02		0.22		0.44		0.56		0.67		0.83		0.98	
x/c	U.S.	L.S.	U.S.	L.S.	U.S.	L.S.	U.S.	L.S.	U.S.	L.S.	U.S.	L.S.	U.S.	L.S.
.05	.4172	.0032	.9742	-.0714			1.0584	-.1056			1.1165	-.1149	1.2042	-.1120
.10	.3450	-.0274					.9752	-.0667	.3787	-.0725			.9628	-.0690
.15					.8791	-.0664	.9159	-.0688	.3387	-.0685			.8448	-.0431
.20	.4085	-.0333					.8636	-.0729	.8908	-.0697			.7906	-.0328
.25	.1785	-.0542	.3647	-.0914	.7777	-.0785	.8123	-.0750	.6407	-.0716	.9000	-.0607	.7542	-.0317
.30			.2759	-.1711			.7426	-.0830	.7917	-.0746	.8699	-.0671	.6944	-.0317
.40	.3790	-.0876							.2661	-.1606	.7236	-.0798	.6045	-.0383
.50					.3286	-.1699	.3251	-.1674	.3163	-.1730	.2595	-.1659	.4487	-.0590
.60	.2943	-.1034	.3080	-.1672			.3510	-.1757	.3410	-.1707	.2152	-.1704	-.0557	-.1351
.70					.3061	-.1569	.1700	-.1624	.0684	-.1607	.0374	-.1636	-.0655	-.1312
.80	.0142	-.1457	.0473	-.1865	.0460	-.1645	.0538	-.1621			.0255	-.1635		
.90	-.0053	-.1713	.0391	-.1718	.0310	-.1668	.0344	-.1627	.0393	-.1584	.0168	-.1637	-.0590	-.1601
.95			.0337	-.1631	.0266	-.1666	.0251	-.1623	.0321	-.1619	.0098	-.1639	-.0725	-.1722

TAIL 2

TABLE XVII. - CONTINUED

(c) α = -0.08°

	Cp at y/b of													
	0.02		0.22		0.44		0.56		0.67		0.83		0.98	
x/c	U.S.	L.S.	U.S.	L.S.	U.S.	L.S.	U.S.	L.S.	U.S.	L.S.	U.S.	L.S.	U.S.	L.S.
.05			.2261	.2999	.1894	.2802	.1909	.3131					.2516	
.10	.0932	.1320	.2057	.2988	.2124	.3042			.2272	.3048	.2181	[illegible]	[illegible]	[illegible]
.15	.0955	.1309	.1954	.2913	.2143	.2856			.2133	.3077			.1752	.2251
.20	.0819	.1222	.1828	.2632	.2127	.2947	.2063	.2942	.2135	.3041	.2157	.3053	.1627	[illegible]
.25	-.0186	-.0248			.2079	.2916	.2112	.2937	.2154	.2995	.2152	.2997	.1577	.2127
.30	-.0044	-.0054							.2124	.2896	.2145	.2911	.1332	.2011
.40	.0143	.0293	-.0326	-.0148	.0008	.0230	.0094	.0355	.0152	.0431	.2055	.2857	[illegible]	.1830
.50			-.0404	-.0256	-.0109	.0103	-.0023	.0216			.0140	.0412	[illegible]	.1586
.60					-.0157	.0034	-.0021	.0194	-.0057	.0229	-.0172	.0057	-.1333	-.1276
.70	-.0336	.0003	-.0214	-.0122	-.0251	-.0058	-.0308	-.0331	-.1258	-.1103	-.1350	-.1247	-.1460	-.1361
.80	-.1191	-.0995	-.1282	-.1173			-.1425	-.1338	-.1408	-.1338	-.1295	-.1372	-.1272	-.1384
.90	-.1163	-.1101	-.1402	-.1365	-.1221	-.1468	-.1246	-.1395	-.1188	-.1339	-.1150	-.1257		
.95	-.1202	-.1116	-.1320	-.1398			-.1183	-.1275	-.1140	-.1222	-.1127	-.1151		-.1022

TAIL 1

	Cp at y/b of													
	0.02		0.22		0.44		0.56		0.67		0.83		0.98	
x/c	U.S.	L.S.	U.S.	L.S.	U.S.	L.S.	U.S.	L.S.	U.S.	L.S.	U.S.	L.S.	U.S.	L.S.
.05	.3929	.0263	.8774	-.0355			.3621	-.0705			1.0062	-.0780	1.1241	-.0671
.10	.3258	-.0025					.8946	-.0332	.8985	-.0381			.8847	-.0301
.15					.8030	-.0361	.8440	-.0383	.8684	-.0394			.7756	-.0090
.20	.3566	-.0162					.7988	-.0442	.8223	-.0417			.7277	-.0014
.25	.1394	-.0486	.3275	-.0627	.7188	-.0480	.7594	-.0471	.7855	-.0433	.8308	-.0339	.6933	-.0002
.30			.2244	-.1552			.7000	-.0566	.7468	-.0467	.8075	-.0403	.6414	-.0008
.40	.3086	-.0862							.2510	-.1448	.6852	-.0546	.5643	-.0067
.50					.2727	-.1573	.2732	-.1529	.2731	-.1589	.2450	-.1525	.4233	-.0285
.60	.2232	-.0978	.2223	-.1510			.2873	-.1639	.2866	-.1611	.1838	-.1644	-.0665	-.1549
.70					.2537	-.1497	.1308	-.1552	.0337	-.1541	.0112	-.1559	-.0933	-.1630
.80	-.0171	-.1420	.0100	-.1729	.0084	-.1542	.0178	-.1527			-.0015	-.1554		
.90	-.0408	-.1677	-.0006	-.1654	-.0125	-.1559	.0013	-.1532	.0087	-.1503	-.0119	-.1559	-.0825	-.1536
.95			.0001	-.1596	-.0183	-.1563	-.0069	-.1530	.0015	-.1535	-.0188	-.1559	-.0946	-.1661

TAIL 2

TABLE XVII. - CONTINUED

(d) α = 1.92°

	Cp at y/b of													
	0.02		0.22		0.44		0.56		0.67		0.83		0.98	
x/c	U.S.	L.S.	U.S.	L.S.	U.S.	L.S.	U.S.	L.S.	U.S.	L.S.	U.S.	L.S.	U.S.	L.S.
.05			.2326	.3052	.1948	.2971	.1931	.3265					.2487	
.10	.1122	.1549	.2108	.3030	.2164	.3090			.2308	.3059	.2209	.3292	.2272	.3039
.15	.1084	.1509	.2015	.2900	.2172	.2900			.2166	.3096			.1734	.2317
.20	.0897	.1406	.1910	.2718	.2162	.2998	.2119	.2393	.2155	.3085	.2133	.3084	.1567	.2262
.25	-.0265	-.0273			.2131	.2957	.2158	.2981	.2188	.3041	.2158	.2999	.1554	.2112
.30	-.0123	-.0103							.2151	.2962	.2154	.2946	.1435	.2035
.40	-.0015	.0143	-.0293	-.0104	.0022	.0264	.0088	.0355	.0151	.0480	.2079	.2890	.1397	.1871
.50			-.0396	-.0230	-.0094	.0154	-.0034	.0215			.0159	.0439	.1230	.1641
.60					-.0145	.0082	-.0034	.0208	-.0072	.0226	-.0154	.0055	-.1295	-.1235
.70	-.0236	.0089	-.0290	-.0164	-.0252	-.0005	-.0305	-.0311	-.1241	-.1086	-.1373	-.1251	-.1465	-.1384
.80	-.1174	-.0946	-.1297	-.1236			-.1447	-.1323	-.1396	-.1324	-.1297	-.1383	-.1121	-.1351
.90	-.1118	-.1075	-.1306	-.1360	-.1268	-.1442	-.1271	-.1357	-.1171	-.1301	-.1155	-.1234		
.95	-.1160	-.1070	-.1241	-.1342			-.1205	-.1252	-.1128	-.1187	-.1131	-.1148		-.1057

TAIL 1

	Cp at y/b of													
	0.02		0.22		0.44		0.56		0.67		0.83		0.98	
x/c	U.S.	L.S.	U.S.	L.S.	U.S.	L.S.	U.S.	L.S.	U.S.	L.S.	U.S.	L.S.	U.S.	L.S.
.05	.3642	.0339	.7439	.0016			.8500	-.0350			.8945	-.0255	1.0763	-.0180
.10	.3133	.0234					.8012	.0003	.8088	-.0021			.8197	.0051
.15					.7242	-.0021	.7616	-.0062	.7879	-.0079			.7015	.0202
.20	.3067	.0088					.7245	-.0119	.7468	-.0116			.6637	.0235
.25	.0955	-.0323	.2846	-.0310	.6577	-.0132	.6987	-.0148	.7205	-.0123	.7735	-.0032	.6385	.0188
.30			.1750	-.1352			.6569	-.0247	.6950	-.0144	.7548	-.0088	.5357	.0153
.40	.2386	-.0926							.2289	-.1264	.6555	-.0241	.5323	.0127
.50					.2206	-.1398	.2267	-.1356	.2344	-.1424	.2299	-.1347	.4071	-.0127
.60	.1588	-.0896	.1466	-.1306			.2349	-.1471	.2379	-.1460	.1586	-.1590	-.0701	-.1604
.70					.2029	-.1422	.0876	-.1504	.0012	-.1480	-.0095	-.1497	-.0933	-.1592
.80	-.0346	-.1379	-.0221	-.1600	-.0210	-.1459	-.0130	-.1460			-.0255	-.1492		
.90	-.0711	-.1633	-.0410	-.1581	-.0423	-.1470	-.0286	-.1459	-.0213	-.1435	-.0376	-.1495	-.0973	-.1753
.95			-.0407	-.1556	-.0502	-.1471	-.0356	-.1460	-.0276	-.1463	-.0451	-.1497	-.1120	-.1899

TAIL 2

TABLE XVIII. - CONTINUED

(e) α = 3.32°

	Cp at y/b of													
	0.02		0.22		0.44		0.56		0.67		0.83		0.98	
x/c	U.S.	L.S.	U.S.	L.S.	U.S.	L.S.	U.S.	L.S.	U.S.	L.S.	U.S.	L.S.	U.S.	L.S.
.05			.2382	.3130	.1999	.2946	.1966	.3330					[illegible]	
.10	.1249	.1744	.2192	.3103	.2204	.3153			.2336	.3078	.2235	.3039	.2225	.3015
.15	.1184	.1681	.2082	.3001	.2207	.2934			.2207	.3102			.1727	[illegible]
.20	.0975	.1560	.1976	.2929	.2195	.3050	.2177	.3332	.2189	.3125	.2241	.3109	[illegible]	[illegible]
.25	-.0277	-.0250			.2168	.3036	.2209	.3039	.2224	.3079	.2184	.3045	.1549	[illegible]
.30	-.0138	-.0087							.2199	.3009	.2173	.2999	[illegible]	[illegible]
.40	-.0070	.0077	-.0277	-.0063	.0052	.0294	.0116	.0394	.0208	.0511	.2116	.2907	[illegible]	[illegible]
.50			-.0365	-.0197	-.0064	.0188	-.0011	.0251			.0172	.0475	[illegible]	[illegible]
.60					-.0110	.0124	-.0013	.0230	-.0050	.0234	-.0152	.0067	-.1262	-.1222
.70	-.0234	.0091	-.0306	-.0157	-.0205	.0049	-.0275	-.0230	-.1231	-.1106	-.1383	-.1252	-.1352	-.1368
.80	-.1153	-.0918	-.1352	-.1264			-.1355	-.1237	-.1390	-.1314	-.1279	-.1394	-.1083	-.1223
.90	-.1066	-.1038	-.1274	-.1388	-.1297	-.1413	-.1228	-.1335	-.1165	-.1276	-.1153	-.1226		
.95	-.1099	-.1012	-.1225	-.1321			-.1167	-.1213	-.1121	-.1166	-.1133	-.1151		-.1228

TAIL 1

	Cp at y/b of													
	0.02		0.22		0.44		0.56		0.67		0.83		0.98	
x/c	U.S.	L.S.	U.S.	L.S.	U.S.	L.S.	U.S.	L.S.	U.S.	L.S.	U.S.	L.S.	U.S.	L.S.
.05	.2867	.0321	.6108	.0421			.7026	.0000			.7173	.0121	.2917	.0158
.10	.2946	.0368					.6944	.0370	.7049	.0337			.7254	.0308
.15					.6226	.0359	.6623	.0296	.6939	.0257			.6093	.0383
.20	.2825	.0398					.6350	.0242	.6654	.0226			.5945	.0394
.25	.0721	-.0128	.2414	.0002	.5849	.0247	.6195	.0222	.6413	.0230	.6856	.0279	.5696	.0348
.30			.1352	-.1151			.5921	.0119	.6229	.0215	.6750	.0234	.5334	.0341
.40	.1755	-.0962							.2082	-.1056	.6074	.0075	.4883	.0300
.50					.1708	-.1200	.1831	-.1161	.1948	-.1238	.2079	-.1148	.3843	.0000
.60	.0958	-.0773	.1074	-.1123			.1820	-.1276	.1897	-.1280	.1309	-.1478	-.0773	-.1558
.70					.1567	-.1272	.0523	-.1496	-.0238	-.1428	-.0310	-.1434	-.1036	-.1496
.80	-.0524	-.1318	-.0529	-.1515	-.0467	-.1375	-.0428	-.1394			-.0499	-.1432		
.90	-.0943	-.1565	-.0727	-.1487	-.0665	-.1385	-.0569	-.1392	-.0513	-.1372	-.0624	-.1443	-.1079	-.1634
.95			-.0755	-.1499	-.0737	-.1386	-.0631	-.1391	-.0575	-.1396	-.0698	-.1446	-.1220	-.1814

TAIL 2

TABLE XVII. - CONTINUED

(f) α = 5.92°

	Cp at y/b of													
	0.02		0.22		0.44		0.56		0.67		0.83		0.98	
x/c	U.S.	L.S.	U.S.	L.S.	U.S.	L.S.	U.S.	L.S.	U.S.	L.S.	U.S.	L.S.	U.S.	L.S.
.05			.2446	.3252	.2054	.3024	.1971	.3395					.2533	
.10	.1364	.1935	.2291	.3227	.2256	3209			.2391	.3104	.2246	.3115	.2125	.2961
.15	.1272	.1840	.2182	.3127	.2256	.3030			.2256	.3103			.1729	.2342
.20	.1052	.1698	.2076	.2958	.2236	.3121	.2230	.3067	.2237	.3156	.2275	.3155	.1674	.2265
.25	-.0245	-.0187			.2212	.3088	.2257	.3065	.2262	.3119	.2215	.3090	.1587	.2146
.30	-.0115	-.0041							.2235	.3062	.2136	.3046	.1545	.2062
.40	-.0074	.0084	-.0245	-.0012	.0085	.0355	.0144	.0424	.0225	.0572	.2138	.2953	.1529	.2002
.50			-.0341	-.0160	-.0004	.0247	.0022	.0287			.0177	.0481	.1376	.1743
.60					-.0038	.0194	.0014	.0263	-.0043	.0251	-.0141	.0065	-.1189	-.1198
.70	-.0270	.0066	-.0290	-.0134	-.0124	.0111	-.0274	-.0251	-.1259	-.1120	-.1391	-.1272	-.1199	-.1310
.80	-.1143	-.0926	-.1354	-.1265			-.1393	-.1270	-.1373	-.1302	-.1258	-.1333	-.1253	-.0905
.90	-.1038	-.1008	-.1204	-.1386	-.1293	-.1375	-.1205	-.1362	-.1144	-.1269	-.1154	-.1208		
.95	-.1052	-.0971	-.1186	-.1288			-.1165	-.1254	-.1106	-.1159	-.1139	-.1150		-.1479

TAIL 1

	Cp at y/b of													
	0.02		0.22		0.44		0.56		0.67		0.83		0.98	
x/c	U.S.	L.S.	U.S.	L.S.	U.S.	L.S.	U.S.	L.S.	U.S.	L.S.	U.S.	L.S.	U.S.	L.S.
.05	.2324	.0441	.4889	.0865			.5405	.0358			.5157	.0480	.6510	.0481
.10	.2264	.0502					.5805	.0781	.5840	.0724			.5906	.0593
.15					.5267	.0794	.5638	.0704	.5900	.0654			.5155	.0587
.20	.2371	.0671					.5425	.0658	.5762	.0636			.5089	.0547
.25	.0582	.0147	.1922	.0333	.4929	.0678	.5284	.0647	.5546	.0648	.5889	.0655	.4926	.0498
.30			.0926	-.0917			.5080	.0541	.5426	.0632	.5867	.0623	.4644	.0502
.40	.1116	-.0910							.1735	-.0802	.5440	.0459	.4299	.0476
.50					.1210	-.0975	.1356	-.0940	.1523	-.1014	.1745	-.0914	.3502	.0142
.60	.0397	-.0639	.0648	-.0893			.1322	-.1045	.1430	-.1054	.1025	-.1317	-.0875	-.1426
.70					.1032	-.1087	.0166	-.1494	-.0526	-.1386	-.0526	-.1353	-.1088	-.1408
.80	-.0611	-.1221	-.0845	-.1528	-.0746	-.1298	-.0730	-.1325			-.0729	-.1354		
.90	-.0978	-.1485	-.1008	-.1414	-.0926	-.1311	-.0855	-.1315	-.0784	-.1306	-.0859	-.1367	-.0975	-.1481
.95			-.1004	-.1426	-.0989	-.1315	-.0909	-.1315	-.0849	-.1331	-.0931	-.1367	-.1102	-.1455

TAIL 2

TABLE XVIII.- CONTINUED

(q) α = 7.92°

	Cp at y/b of													
	0.02		0.22		0.44		0.56		0.67		0.83		0.98	
x/c	U.S.	L.S.	U.S.	L.S.	U.S.	L.S.	U.S.	L.S.	U.S.	L.S.	U.S.	L.S.	U.S.	L.S.
.05			.2557	.3370	.2099	.3072	.1888	.3425					.2519	
.10	.1494	.2131	.2404	.3357	.2310	.3254			.2378	.3089	.2214	.3121	.2052	.2919
.15	.1371	.1995	.2292	.3263	.2312	.3081			.2276	.3079			.1745	.2427
.20	.1144	.1827	.2192	.3093	.2301	.3209	.2287	.3063	.2276	.3165	.2284	.3162	.1673	.2319
.25	-.0194	-.0103			.2288	.3195	.2330	.3144	.2302	.3176	.2220	.3149	.1609	.2166
.30	-.0067	.0013							.2265	.3119	.2193	.3069	.1586	.2113
.40	-.0034	.0142	-.0183	.0054	.0132	.0442	.0167	.0461	.0238	.0595	.2121	.2985	.1568	.2034
.50			-.0294	-.0097	.0050	.0324	.0047	.0317			.0168	.0433	.1463	.1831
.60					.0012	.0275	.0031	.0282	-.0017	.0259	-.0184	-.0004	-.1137	-.1143
.70	-.0257	.0105	-.0255	-.0095	-.0070	.0162	-.0260	-.0235	-.1240	-.1099	-.1397	-.1297	-.0992	-.1238
.80	-.1156	-.0940	-.1345	-.1259			-.1362	-.1276	-.1350	-.1296	-.1236	-.1358	-.1187	-.1129
.90	-.1022	-.1001	-.1155	-.1369	-.1227	-.1372	-.1171	-.1329	-.1125	-.1261	-.1156	-.1182		
.95	-.1017	-.0943	-.1149	-.1254			-.1121	-.1206	-.1091	-.1149	-.1145	-.1146		-.1595

TAIL 1

	Cp at y/b of													
	0.02		0.22		0.44		0.56		0.67		0.83		0.98	
x/c	U.S.	L.S.	U.S.	L.S.	U.S.	L.S.	U.S.	L.S.	U.S.	L.S.	U.S.	L.S.	U.S.	L.S.
.05	.1514	.0649	.3739	.1350			.4167	.0764			.3929	.0888	.5161	.0908
.10	.1541	.0654					.4650	.1264	.4660	.1167			.4791	.0982
.15					.4240	.1272	.4554	.1177	.4755	.1115			.4072	.0887
.20	.1833	.0922					.4430	.1135	.4678	.1113			.4032	.0763
.25	.0319	.0384	.1317	.0214	.4043	.1150	.4351	.1134	.4586	.1126	.4799	.1103	.3936	.0670
.30			.0416	-.0711			.4219	.1002	.4457	.1108	.4825	.1090	.3715	.0669
.40	.0379	-.0752							.1297	-.0522	.4546	.0898	.3535	.0633
.50					.0687	-.0735	.0987	-.0672	.1077	-.0746	.1316	-.0648	.2948	.0262
.60	-.0055	-.0490	.0131	-.0671			.0739	-.0771	.0971	-.0787	.0602	-.1122	-.1041	-.1416
.70					.0551	-.0885	-.0258	-.1345	-.0771	-.1450	-.0769	-.1326	-.1123	-.1332
.80	-.0752	-.1112	-.1168	-.1519	-.1043	-.1272	-.1021	-.1287			-.0955	-.1321		
.90	-.0985	-.1410	-.1243	-.1371	-.1196	-.1282	-.1119	-.1272	-.1050	-.1262	-.1077	-.1329	-.0986	-.1495
.95			-.1200	-.1359	-.1240	-.1285	-.1156	-.1272	-.1121	-.1284	-.1141	-.1332	-.1125	-.1618

TAIL 2

TABLE XVII. - CONTINUED

(h) α = 9.72°

	Cp at y/b of													
	0.02		0.22		0.44		0.56		0.67		0.83		0.98	
x/c	U.S.	L.S.	U.S.	L.S.	U.S.	L.S.	U.S.	L.S.	U.S.	L.S.	U.S.	L.S.	U.S.	L.S.
.05			.2566	.3469	.2113	.3092	.1877	.3510					.2661	
.10	.1645	.2322	.2499	.3466	.2320	.3306			.2444	.3274	.2330	.3160	.2104	.3013
.15	.1502	.2164	.2408	.3423	.2338	.3146			.2349	.3222			.1888	.2605
.20	.1267	.1969	.2332	.3289	.2330	.3270	.2319	.3167	.2338	.3310	.2421	.3338	.1811	.2472
.25	-.0127	-.0023			.2306	.3265	.2357	.3239	.2353	.3309	.2354	.3320	.1748	.2328
.30	.0005	.0095							.2302	.3238	.2313	.3200	.1739	.2268
.40	.0045	.0247	-.0108	.0153	.0113	.0484	.0130	.0508	.0241	.0635	.2235	.3096	.1731	.2214
.50			-.0213	-.0010	.0039	.0356	.0002	.0333			.0223	.0461	.1645	.2007
.60					.0016	.0329	.0000	.0326	-.0023	.0259	-.0175	-.0021	-.1138	-.1063
.70	-.0203	.0184	-.0216	-.0027	-.0058	.0227	-.0325	-.0190	-.1222	-.1056	-.1387	-.1302	-.1051	-.1098
.80	-.1146	-.0922	-.1303	-.1211			-.1338	-.1207	-.1316	-.1305	-.1231	-.1357	-.1153	-.1012
.90	-.1004	-.0982	-.1113	-.1334	-.1210	-.1286	-.1139	-.1251	-.1103	-.1236	-.1151	-.1175		
.95	-.0986	-.0921	-.1103	-.1207			-.1092	-.1142	-.1074	-.1129	-.1143	-.1142		-.1671

TAIL 1

	Cp at y/b of													
	0.02		0.22		0.44		0.56		0.67		0.83		0.98	
x/c	U.S.	L.S.	U.S.	L.S.	U.S.	L.S.	U.S.	L.S.	U.S.	L.S.	U.S.	L.S.	U.S.	L.S.
.05	.0720	.0904	.2694	.1838			.3156	.1215			.2923	.1349	.4029	.1382
.10	.0783	.0812					.3580	.1791	.3605	.1656			.3844	.1416
.15					.3295	.1777	.3522	.1692	.3712	.1639			.3138	.1245
.20	.1257	.1130					.3458	.1640	.3655	.1646			.3070	.1066
.25	-.0076	.0525	.0744	.1037	.3102	.1660	.3403	.1650	.3595	.1664	.3750	.1619	.3023	.0965
.30			-.0096	-.0499			.3280	.1509	.3550	.1648	.3754	.1598	.2857	.0915
.40	.0049	-.0571							.0807	-.0209	.3536	.1384	.2716	.0886
.50					.0219	-.0490	.0424	-.0378	.0586	-.0440	.0813	-.0374	.2311	.0447
.60	-.0355	-.0342	-.0230	-.0416			.0337	-.0485	.0481	-.0490	.0175	-.0907	-.1207	-.1395
.70					.0051	-.0635	-.0613	-.1208	-.1029	-.1504	-.1038	-.1390	-.1246	-.1462
.80	-.0870	-.1017	-.1395	-.1377	-.1280	-.1375	-.1270	-.1367			-.1197	-.1293		
.90	-.0991	-.1331	-.1364	-.1501	-.1433	-.1302	-.1373	-.1285	-.1285	-.1244	-.1299	-.1282	-.1184	-.1385
.95			-.1283	-.1368	-.1363	-.1289	-.1347	-.1279	-.1331	-.1259	-.1333	-.1279	-.1293	-.1502

TAIL 2

TABLE XVIII. - CONTINUED
(f) α = 11.42°

	Cp at y/b of													
	0.02		0.22		0.44		0.56		0.67		0.83		0.98	
x/c	U.S.	L.S.	U.S.	L.S.	U.S.	L.S.	U.S.	L.S.	U.S.	L.S.	U.S.	L.S.	U.S.	L.S.
.05			.2947	.3804	.2391	.3441	.2141	.3875					.2882	
.10	.1794	.2533	.2757	.3821	.2610	.3662			.2599	.3564	.2543	.3449	.2139	.3179
.15	.1636	.2371	.2625	.3724	.2623	.3507			.2607	.3483			.2064	.2841
.20	.1390	.2167	.2518	.3560	.2610	.3594	.2495	.3354	.2601	.3572	.2654	.3629	.2004	.2702
.25	-.0051	.0083			.2564	.3570	.2624	.3533	.2610	.3576	.2595	.3582	.1955	.2570
.30	.0096	.0209							.2549	.3504	.2565	.3470	.1951	.2507
.40	.0139	.0376	-.0044	.0245	.0251	.0612	.0276	.0545	.0397	.0773	.2471	.3368	.1953	.2464
.50			-.0145	.0065	.0168	.0492	.0143	.0474			.0347	.0537	.1933	.2261
.60					.0132	.0449	.0072	.0404	.0125	.0398	-.0069	.0086	-.1065	-.0950
.70	-.0147	.0276	-.0178	.0026	.0056	.0332	-.0189	-.0052	-.1108	-.1006	-.1330	-.1243	-.0944	-.1002
.80	-.1122	-.0882	-.1276	-.1195			-.1267	-.1137	-.1280	-.1232	-.1167	-.1307	-.1235	-.0728
.90	-.0968	-.0948	-.1079	-.1292	-.1159	-.1257	-.1078	-.1199	-.1036	-.1148	-.1084	-.1105		
.95	-.0945	-.0881	-.1066	-.1158			-.1044	-.1083	-.1000	-.1037	-.1073	-.1072		-.1692

TAIL 1

	Cp at y/b of													
	0.02		0.22		0.44		0.56		0.67		0.83		0.98	
x/c	U.S.	L.S.	U.S.	L.S.	U.S.	L.S.	U.S.	L.S.	U.S.	L.S.	U.S.	L.S.	U.S.	L.S.
.05	.0095	.1143	.1910	.2372			.2396	.1715			.2115	.1882	.3041	.1882
.10	.0251	.1013					.2740	.2373	.2762	.2223			.2957	.1893
.15					.2489	.2355	.2673	.2279	.2875	.2251			.2338	.1653
.20	.0627	.1357					.2637	.2229	.2815	.2255			.2314	.1493
.25	-.0619	.0742	.0257	.1408	.2325	.2216	.2590	.2247	.2754	.2281	.2901	.2196	.2256	.1338
.30			-.0491	-.0289			.2468	.2078	.2708	.2265	.2902	.2177	.2155	.1268
.40	-.0376	-.0412							.0337	.0157	.2708	.1955	.2023	.1205
.50					-.0209	-.0235	-.0001	-.0088	.0118	-.0099	.0341	-.0095	.1709	.0683
.60	-.0438	-.0131	-.0602	-.0160			-.0101	-.0212	.0028	-.0158	-.0210	-.0644	-.1335	-.1358
.70					-.0365	-.0366	-.0900	-.1031	-.1271	-.1367	-.1283	-.1450	-.1348	-.1508
.80	-.1076	-.0901	-.1529	-.1218	-.1507	-.1476	-.1486	-.1498			-.1416	-.1289		
.90	-.0871	-.1244	-.1400	-.1391	-.1357	-.1379	-.1349	-.1356	-.1313	-.1260	-.1296	-.1203	-.1216	-.1076
.95			-.1314	-.1387	-.1304	-.1299	-.1285	-.1282	-.1253	-.1231	-.1210	-.1190	-.1211	-.1162

TAIL 2

TABLE XVII. - CONTINUED

(j) α = 15.92°

	Cp at y/b of													
	0.02		0.22		0.44		0.56		0.67		0.83		0.98	
x/c	U.S.	L.S.	U.S.	L.S.	U.S.	L.S.	U.S.	L.S.	U.S.	L.S.	U.S.	L.S.	U.S.	L.S.
.05			.3744	.4857	.3080	.4222	.2833	.4739					.3651	
.10	.2479	.3376	.3531	.4288	.3358	.4558			.3376	.4386	.3189	.4272	.2541	.3791
.15	.2330	.3194	.3436	.4731	.3376	.4445			.3298	.4270			.2524	.3507
.20	.2047	.2939	.3357	.4529	.3380	.4532	.3032	.3869	.3294	.4409	.3317	.4433	.2574	.3356
.25	.0369	.0508			.3324	.4522	.3350	.4417	.3289	.4432	.3260	.4357	.2564	.3245
.30	.0500	.0576							.3232	.4356	.3211	.4235	.2575	.3197
.40	.0680	.0379	.0352	.0664	.0681	.1079	.0667	.1110	.0784	.1249	.3116	.4125	.2575	.3137
.50			.0224	.0447	.0536	.0980	.0553	.0957			.0697	.0953	.2504	.3000
.60					.0545	.0930	.0373	.0709	.0511	.0853	.0231	.0417	-.0825	-.0764
.70	.0240	.0726	.0175	.0420	.0489	.0804	.0135	.0362	-.0849	-.0725	-.1168	-.1056	-.0763	-.0681
.80	-.0858	-.0592	-.1103	-.0969			-.1028	-.0856	-.1097	-.1004	-.0967	-.1120	-.1345	-.0699
.90	-.0683	-.0504	-.0947	-.1073	-.0998	-.1027	-.0846	-.0960	-.0818	-.0931	-.0882	-.0906		
.95	-.0668	-.0550	-.0896	-.0952			-.0754	-.0863	-.0772	-.0808	-.0871	-.0858		-.1594

TAIL 1

	Cp at y/b of													
	0.02		0.22		0.44		0.56		0.67		0.83		0.98	
x/c	U.S.	L.S.	U.S.	L.S.	U.S.	L.S.	U.S.	L.S.	U.S.	L.S.	U.S.	L.S.	U.S.	L.S.
.05	-.0754	.1596	.0260	.3273			.0882	.2971			.0623	.2978	.1368	.2965
.10	-.0809	.1370					.1146	.3792	.1184	.3649			.1281	.3037
.15					.1038	.3540	.1175	.3694	.1340	.3695			.0872	.2856
.20	-.0843	.1718					.1141	.3537	.1333	.3683			.0798	.2614
.25	-.1381	.1229	-.0506	.1968	.0936	.3221	.1119	.3474	.1264	.3687	.1367	.3576	.0776	.2447
.30			-.1096	.0108			.1057	.3170	.1211	.3632	.1397	.3598	.0737	.2404
.40	-.0698	-.0174							-.0525	.0902	.1267	.3335	.0813	.2188
.50					-.0913	.0259	-.0771	.0448	-.0723	.0529	-.0471	.0523	.0649	.1469
.60	-.0092	.0294	-.0973	.0299			-.0915	.0317	-.0802	.0417	-.0935	.0005	-.1438	-.1234
.70					-.1077	.0197	-.1412	-.0649	-.1491	-.1044	-.1465	-.1051	-.1594	-.1229
.80	-.0916	-.0671	-.1551	-.0862	-.1370	-.1063	-.1354	-.1217			-.1405	-.1175		
.90	-.0834	-.1103	-.1494	-.1114	-.1381	-.1125	-.1349	-.1284	-.1330	-.1241	-.1395	-.1249	-.1316	-.1181
.95			-.1370	-.1188	-.1381	-.1153	-.1347	-.1300	-.1353	-.1295	-.1393	-.1294	-.1389	-.1306

TAIL 2

TABLE XVII. - CONCLUDED

(k) α = 19.92°

	Cp at y/b of													
	0.02		0.22		0.44		0.56		0.67		0.83		0.98	
x/c	U.S.	L.S.	U.S.	L.S.	U.S.	L.S.	U.S.	L.S.	U.S.	L.S.	U.S.	L.S.	U.S.	L.S.
.05			.4825	.6158	.3965	.5427	.3657	.5863					.4267	
.10	.3272	.4373	.4594	.6196	.4320	.5738			.4201	.5392	.3970	.5450	.3333	.4605
.15	.3178	.4180	.4461	.5966	.4356	.5644			.4163	.5280			.3347	.4343
.20	.2854	.3893	.4309	.5683	.4354	.5751	.3792	.4809	.4152	.5445	.4106	.5435	.3312	.4146
.25	.0899	.1033			.4288	.5722	.4250	.5455	.4151	.5445	.4060	.5279	.3304	.4049
.30	.1221	.1272							.4095	.5315	.4006	.5114	.3331	.4007
.40	.1340	.1766	.0827	.1151	.1226	.1603	.1192	.1655	.1273	.1705	.3901	.4950	.3325	.4002
.50			.0687	.0895	.1118	.1494	.1063	.1501			.1397	.1322	.3263	.3744
.60					.1060	.1388	.0752	.1190	.0973	.1308	.0599	.0739	-.0591	-.0542
.70	.0736	.1274	.0623	.0840	.0995	.1242	.0677	.0751	-.0636	-.0486	-.0953	-.0865	-.0500	-.0354
.80	-.0505	-.0251	-.0821	-.0716			-.0781	-.0604	-.0885	-.0775	-.0764	-.0886	-.1505	-.0733
.90	-.0302	-.0224	-.0724	-.0783	-.0831	-.0813	-.0639	-.0707	-.0560	-.0629	-.0653	-.0665		
.95	-.0293	-.0190	-.0643	-.0674			-.0500	-.0581	-.0508	-.0514	-.0635	-.0631		-.1465

TAIL 1

	Cp at y/b of													
	0.02		0.22		0.44		0.56		0.67		0.83		0.98	
x/c	U.S.	L.S.	U.S.	L.S.	U.S.	L.S.	U.S.	L.S.	U.S.	L.S.	U.S.	L.S.	U.S.	L.S.
.05	-.0733	.2312	.0179	.4325			.0601	.4368			.0332	.4804	.1053	.4479
.10	-.0863	.2128					.0635	.5261	.0737	.5401			.0983	.4974
.15					.0404	.4702	.0529	.5021	.0728	.5265			.0635	.4743
.20	-.1427	.2556					.0415	.4688	.0650	.5033			.0575	.4441
.25	-.1796	.2196	-.1176	.2795	.0123	.4172	.0338	.4508	.0531	.4881	.0759	.5166	.0541	.4086
.30			-.1686	.0619			.0250	.4158	.0441	.4718	.0693	.5015	.0504	.3822
.40	-.1022	.0286							-.1014	.1492	.0519	.4123	.0469	.3453
.50					-.1399	.0798	-.1251	.1017	-.1194	.1081	-.0957	.1277	.0200	.2328
.60	-.0456	.0877	-.1564	.0992			-.1420	.0905	-.1275	.0968	-.1323	.0550	-.1539	-.1062
.70					-.1531	.1148	-.1698	-.0212	-.1601	-.0717	-.1620	-.0673	-.1700	-.1190
.80	-.1040	-.0322	-.1761	-.0503	-.1605	-.0581	-.1595	-.0845			-.1602	-.0823		
.90	-.1038	-.0958	-.1620	-.0804	-.1627	-.0730	-.1594	-.0794	-.1520	-.0925	-.1595	-.0922	-.1654	-.1024
.95			-.1429	-.0909	-.1627	-.0734	-.1590	-.0781	-.1563	-.0978	-.1599	-.0981	-.1671	-.1135

TAIL 2

TABLE XVIII. - PRESSURE COEFFICIENTS, $\beta = 0°$, $\delta_{2,4} = -15°$, $M = 1.70$

(a) $\alpha = -4.15°$

	Cp at y/b of													
	0.02		0.22		0.44		0.56		0.67		0.83		0.98	
x/c	U.S.	L.S.	U.S.	L.S.	U.S.	L.S.	U.S.	L.S.	U.S.	L.S.	U.S.	L.S.	U.S.	L.S.
.05			.1375	.1929	.1365	.1859	.1324	.2170					.1556	
.10	.0570	.0645	.1364	.1968	.1333	.2023			.1379	.1951	.1543		.1554	.2176
.15	.0541	.0628	.1321	.1949	.1399	.1929			.1358	.1956			.1472	.2036
.20	.0459	.0567	.1225	.1940	[illegible]	[illegible]	.1972	.2221	.1321	.1975	.1372	[illegible]	[illegible]	[illegible]
.25	.0023	.0024			.1345	.1290	.1351	.1962	.1326	.1956	.1420	.1923	[illegible]	.1768
.30	.0017	.0019							.1299	.1958	.1392	.1937	.1145	.1653
.40	.0020	.0006	.0073	.0001	.0124	.0256	.0099	.0300	.0197	.0530	.1335	.1734	.1064	.1457
.50			.0021	.0063	.0022	.0130	-.0033	.0156			.0313	.0490	.0935	.1261
.60					-.0010	.0146	.0584	.0457	-.0048	.0134	.0045	.0139	-.0411	-.0390
.70	-.0032	.0113	-.0042	.0001	-.0074	.0075	-.0199	-.0132	-.0517	-.0445	-.0450	-.0428	-.0463	-.0471
.80	-.0345	-.0247	-.0425	-.0419			-.0615	-.0534	-.0355	-.0396	-.0447	-.0492	-.0455	-.0476
.90	-.0380	-.0377	-.0373	-.0386	-.0345	-.0330	-.0551	-.0528	-.0391	-.0435	-.0393	-.0422		
.95	-.0372	-.0382	-.0371	-.0377			-.0560	-.0495	-.0383	-.0408	-.0375	-.0392		-.0377

TAIL 1

	Cp at y/b of													
	0.02		0.22		0.44		0.56		0.67		0.83		0.98	
x/c	U.S.	L.S.	U.S.	L.S.	U.S.	L.S.	U.S.	L.S.	U.S.	L.S.	U.S.	L.S.	U.S.	L.S.
.05	.2927	.0139	.3481	-.0198			.8927	-.0232			.8498	-.0015	.9648	-.0164
.10	.2399	-.0134					.9869	-.0247	.8817	.0005			.9291	-.0149
.15					.8247	-.0262	.8585	-.0289	.8825	-.0279			.8150	-.0173
.20	.2533	-.0184					.3295	-.0330	.8553	-.0332			.7729	-.0197
.25	.1576	-.0262	.4265	-.0389	.7811	-.0384	.8072	-.0350	.8293	-.0358	.8468	-.0300	.7577	-.0223
.30			.3315	-.0500			.7734	-.0377	.8063	-.0364	.8457	-.0327	.7291	-.0203
.40	.2791	.0103							.3906	-.0558	.7806	-.0378	.6842	-.0181
.50					.3471	-.0423	.3869	-.0494	.3706	-.0512	.3853	-.0519	.5728	-.0274
.60	.2602	-.0309	.2876	-.0392			.3581	-.0531	.3645	-.0469	.3041	-.0493	.0967	-.0542
.70					.3135	-.0473	.2115	-.0513	.1420	-.0351	.1345	-.0492	.0581	-.0440
.80	.1010	-.0478	.0981	-.0549	.1133	-.0521	.1107	-.0536			.1148	-.0435		
.90	.0302	-.0571	.0715	-.0556	.0891	-.0536	.0944	-.0528	.0965	-.0482	.1029	-.0480	.0389	-.0467
.95			.0648	-.0564	.0801	-.0522	.0873	-.0529	.0927	-.0484	.0944	-.0502	.0238	-.0514

TAIL 2

TABLE XVIII. - CONTINUED
(b) α = -2.14°

	Cp at y/b of													
	0.02		0.22		0.44		0.56		0.67		0.83		0.98	
x/c	U.S.	L.S.	U.S.	L.S.	U.S.	L.S.	U.S.	L.S.	U.S.	L.S.	U.S.	L.S.	U.S.	L.S.
.05			.1422	.1885	.1331	.1884	.1359	.2153					[illegible]	
.10	.0435	.0601	.1395	.1905	.1413	.2035			.1393	.1995	.1439		[illegible]	[illegible]
.15	.0422	.0612	.1319	.1833	.1410	.1948			.1351	.1935			[illegible]	.2035
.20	.0425	.0583	.1266	.1832	.1337	.1931	.1565	.2051	.1333	.1999	.1464	[illegible]	[illegible]	[illegible]
.25	.0049	.0099			.1360	.1998	.1394	.1952	.1343	.1975	.1442	.1961	[illegible]	[illegible]
.30	.0050	.0117							.1310	.1925	.1413	.1924	[illegible]	[illegible]
.40	.0084	.0128	.0034	.0160	.0095	.0283	.0095	.0361	.0185	.0565	.1354	.1824	[illegible]	.1487
.50			-.0024	.0031	-.0015	.0211	-.0040	.0217			.0329	.0495	[illegible]	[illegible]
.60					-.0061	.0158	.0376	.0446	-.0089	.0203	.0033	.0145	-.0420	[illegible]
.70	.0007	.0156	-.0053	.0014	-.0113	.0089	-.0224	-.0043	-.0562	-.0345	-.0472	-.0432	-.0483	-.0451
.80	-.0331	-.0241	-.0426	-.0395			-.0655	-.0444	-.0385	-.0402	-.0467	-.0501	-.0485	-.0485
.90	-.0378	-.0365	-.0378	-.0388	-.0400	-.0290	-.0585	-.0431	-.0415	-.0444	-.0415	-.0435		
.95	-.0382	-.0378	-.0371	-.0369			-.0570	-.0395	-.0404	-.0414	-.0395	-.0404		-.0388

TAIL 1

	Cp at y/b of													
	0.02		0.22		0.44		0.56		0.67		0.83		0.98	
x/c	U.S.	L.S.	U.S.	L.S.	U.S.	L.S.	U.S.	L.S.	U.S.	L.S.	U.S.	L.S.	U.S.	L.S.
.05	.2680	.0214	.7394	-.0134			.7209	-.0168			.6437	-.0011	.7563	-.0095
.10	.2290	-.0087					.7548	-.0182	.7429	-.0002			.7597	-.0096
.15					.7401	-.0218	.7594	-.0239	.7695	-.0217			.6848	-.0115
.20	.2506	-.0129					.7510	-.0270	.7633	-.0270			.6533	-.0136
.25	.1440	-.0234	.3954	-.0347	.7127	-.0325	.7348	-.0292	.7501	-.0290	.7410	-.0209	.6533	-.0147
.30			.2866	-.0512			.7123	-.0328	.7349	-.0299	.7501	-.0251	.6385	-.0153
.40	.2590	.0009							.3602	-.0547	.7149	-.0319	.6201	-.0114
.50					.2993	-.0432	.3122	-.0512	.3287	-.0547	.3516	-.0512	.5340	-.0199
.60	.1959	-.0339	.2335	-.0415			.3103	-.0539	.3191	-.0484	.2712	-.0498	.0809	-.0536
.70					.2637	-.0473	.1818	-.0516	.1123	-.0354	.1079	-.0487	.0448	-.0441
.80	.0579	-.0494	.0571	-.0546	.0817	-.0515	.0802	-.0543			.0858	-.0489		
.90	.0112	-.0578	.0424	-.0565	.0595	-.0537	.0643	-.0539	.0676	-.0487	.0738	-.0470	.0208	-.0461
.95			.0360	-.0570	.0526	-.0527	.0576	-.0535	.0642	-.0493	.0661	-.0492	.0114	-.0510

TAIL 2

TABLE XVIII. - CONTINUED

(c) $\alpha = -0.15°$

	Cp at y/b of													
	0.02		0.22		0.44		0.56		0.67		0.83		0.98	
x/c	U.S.	L.S.	U.S.	L.S.	U.S.	L.S.	U.S.	L.S.	U.S.	L.S.	U.S.	L.S.	U.S.	L.S.
.05			.1453	.1948	.1411	.1903	.1362	.2213					.1642	
.10	.0558	.0712	.1437	.1962	.1433	.2054			.1425	.2026	.1453		.1637	.2264
.15	.0557	.0734	.1370	.1906	.1422	.1973			.1376	.2007			.1447	.2099
.20	.0497	.0711	.1311	.1875	.1400	.1955	.1497	.2022	.1357	.2005	.1488	.2017	.1346	.1858
.25	.0056	.0117			.1378	.1922	.1352	.1994	.1366	.1988	.1459	.1987	.1224	.1639
.30	.0055	.0133							.1340	.1945	.1432	.1954	.1094	.1596
.40	.0057	.0115	.0053	.0191	.0041	.0285	.0053	.0313	.0162	.0517	.1370	.1844	.1003	.1460
.50			-.0014	.0063	-.0054	.0192	-.0089	.0170			.0330	.0526	.0894	.1211
.60					-.0096	.0152	.0215	.0364	-.0101	.0177	.0036	.0166	-.0421	-.0382
.70	.0008	.0176	-.0053	.0043	-.0160	.0082	-.0272	-.0104	-.0602	-.0390	-.0481	-.0429	-.0492	-.0450
.80	-.0345	-.0244	-.0437	-.0395			-.0696	-.0507	-.0398	-.0401	-.0473	-.0502	-.0508	-.0494
.90	-.0390	-.0386	-.0378	-.0401	-.0474	-.0314	-.0625	-.0484	-.0421	-.0443	-.0417	-.0439		
.95	-.0391	-.0393	-.0375	-.0382			-.0608	-.0447	-.0411	-.0413	-.0406	-.0412		-.0401

TAIL 1

	Cp at y/b of													
	0.02		0.22		0.44		0.56		0.67		0.83		0.98	
x/c	U.S.	L.S.	U.S.	L.S.	U.S.	L.S.	U.S.	L.S.	U.S.	L.S.	U.S.	L.S.	U.S.	L.S.
.05	.2500	.0300	.6208	-.0012			.6046	-.0047			.5409	.0051	.6500	.0023
.10	.2125	-.0000					.6486	-.0054	.6298	.0063			.6603	.0008
.15					.6371	-.0115	.6456	-.0113	.6507	-.0094			.5755	-.0015
.20	.2193	-.0038					.6450	-.0147	.6510	-.0138			.5596	-.0038
.25	.1098	-.0182	.3468	-.0249	.6243	-.0212	.6401	-.0166	.6447	-.0157	.6296	-.0107	.5523	-.0052
.30			.2413	-.0495			.6197	-.0214	.6356	-.0172	.6395	-.0153	.5380	-.0054
.40	.2135	-.0027							.3133	-.0502	.6116	-.0216	.5178	-.0068
.50					.2529	-.0444	.2639	-.0524	.2762	-.0546	.2953	-.0483	.4735	-.0130
.60	.1416	-.0350	.1790	-.0423			.2629	-.0535	.2689	-.0494	.2159	-.0491	.0567	-.0509
.70					.2164	-.0457	.1507	-.0502	.0852	-.0369	.0763	-.0472	.0238	-.0413
.80	.0268	-.0507	.0339	-.0531	.0565	-.0490	.0557	-.0529			.0584	-.0471		
.90	-.0047	-.0575	.0149	-.0551	.0348	-.0513	.0404	-.0524	.0428	-.0478	.0477	-.0454	.0025	-.0427
.95			.0108	-.0554	.0279	-.0504	.0343	-.0526	.0390	-.0482	.0404	-.0472	-.0057	-.0479

TAIL 2

TABLE XVIII. - CONTINUED

(d) α = 1.36°

	Cp at y/b of													
	0.02		0.22		0.44		0.56		0.67		0.83		0.98	
x/c	U.S.	L.S.	U.S.	L.S.	U.S.	L.S.	U.S.	L.S.	U.S.	L.S.	U.S.	L.S.	U.S.	L.S.
.05			.1478	.1992	.1444	.1931	.1465	.2221					.1561	
.10	.0668	.0929	.1466	.2011	.1452	.2090			.1383	.2052	.1503		[illegible]	.2315
.15	.0670	.0922	.1405	.1993	.1436	.1986			.1443	.2029			.1477	.2044
.20	.0586	.0875	.1355	.1327	.1415	.1990	.1457	.2001	.1423	.2013	.1397	[illegible]	.1365	.1552
.25	.0034	.0098			.1392	.1997	.1427	.2011	.1425	.2012	.1471	.2012	.1224	.1531
.30	.0029	.0125							.1380	.1971	[illegible]	[illegible]	[illegible]	.1533
.40	.0005	.0055	.0057	.0220	.0057	.0258	.0124	.0334	.0243	.0551	.1335	.1555	[illegible]	[illegible]
.50			-.0005	.0092	-.0002	.0179	-.0003	.0188			.0335	.0221	[illegible]	.1221
.60					-.0047	.0135	.0221	.0364	-.0019	.0183	.0037	[illegible]	-.0409	-.0476
.70	-.0041	.0129	-.0061	.0048	-.0105	.0071	-.0190	-.0093	-.0303	-.0390	-.0497	-.0433	-.0494	-.0455
.80	-.0388	-.0273	-.0447	-.0400			-.0536	-.0485	-.0407	-.0415	-.0486	-.0517	-.0514	-.0523
.90	-.0411	-.0422	-.0391	-.0413	-.0373	-.0342	-.0524	-.0471	-.0427	-.0460	-.0426	-.0453		
.95	-.0404	-.0417	-.0387	-.0398			-.0510	-.0438	-.0417	-.0428	-.0413	-.0432		-.0413

TAIL 1

	Cp at y/b of													
	0.02		0.22		0.44		0.56		0.67		0.83		0.98	
x/c	U.S.	L.S.	U.S.	L.S.	U.S.	L.S.	U.S.	L.S.	U.S.	L.S.	U.S.	L.S.	U.S.	L.S.
.05	.2130	.0375	.3126	.0147			.5037	.0095			.4547	.0130	.5529	.0137
.10	.1845	.0056					.5465	.0105	.5378	.0161			.5554	.0114
.15					.5367	.0032	.5464	.0039	.5519	.0063			.4963	.0079
.20	.1868	.0080					.5438	.0013	.5508	.0016			.4793	.0053
.25	.0793	-.0098	.2836	-.0111	.5291	-.0055	.5425	-.0004	.5467	.0003	.5348	-.0001	.4718	.0039
.30			.1993	-.0447			.5234	-.0054	.5402	-.0015	.5445	-.0041	.4571	.0032
.40	.1712	-.0039							.2570	-.0440	.5222	-.0111	.4480	.0017
.50					.1931	-.0435	.2116	-.0503	.2217	-.0508	.2408	-.0457	.4000	-.0090
.60	.0868	-.0347	.1368	-.0421			.2095	-.0554	.2137	-.0497	.1634	-.0519	.0324	-.0527
.70					.1763	-.0449	.1162	-.0501	.0570	-.0380	.0447	-.0430	.0052	-.0431
.80	.0073	-.0504	.0053	-.0516	.0337	-.0471	.0300	-.0515			.0287	-.0455		
.90	-.0227	-.0554	-.0133	-.0530	.0136	-.0494	.0188	-.0510	.0184	-.0481	.0210	-.0463	-.0143	-.0438
.95			-.0172	-.0535	.0079	-.0488	.0117	-.0512	.0145	-.0491	.0145	-.0484	-.0224	-.0488

TAIL 2

TABLE XVIII. - CONTINUED

(e) α = 3.35°

	Cp at y/b of													
	0.02		0.22		0.44		0.56		0.67		0.83		0.98	
x/c	U.S.	L.S.	U.S.	L.S.	U.S.	L.S.	U.S.	L.S.	U.S.	L.S.	U.S.	L.S.	U.S.	L.S.
.05			.1536	.2056	.1508	.1987	.1512	.2323					.1750	
.10	.0775	.1142	.1522	.2082	.1510	.2129			.1520	.2133	.1513		.1807	.2416
.15	.0775	.1100	.1465	.2033	.1494	.2023			.1475	.2078			.1465	.2041
.20	.0667	.1041	.1414	.1998	.1465	.2033	.1441	.2059	.1460	.2104	.1573	.2119	.1365	.1911
.25	.0033	.0122			.1441	.2000	.1437	.2113	.1453	.2064	.1548	.2098	.1252	.1759
.30	.0027	.0123							.1425	.2028	.1523	.2056	.1168	.1641
.40	-.0000	.0063	.0093	.0239	.0075	.0267	.0111	.0298	.0227	.0507	.1455	.1943	.1098	.1529
.50			.0009	.0108	-.0041	.0156	-.0035	.0150			.0368	.0556	.0967	.1303
.60					-.0086	.0106	.0145	.0296	-.0068	.0127	.0054	.0187	-.0389	-.0357
.70	-.0061	.0107	-.0050	.0064	-.0155	.0036	-.0232	-.0158	-.0567	-.0459	-.0488	-.0431	-.0486	-.0451
.80	-.0412	-.0290	-.0447	-.0403			-.0664	-.0574	-.0413	-.0419	-.0502	-.0518	-.0420	-.0474
.90	-.0408	-.0430	-.0396	-.0423	-.0459	-.0403	-.0595	-.0561	-.0428	-.0463	-.0435	-.0472		
.95	-.0394	-.0417	-.0389	-.0398			-.0580	-.0525	-.0417	-.0433	-.0420	-.0437		-.0476

TAIL 1

	Cp at y/b of													
	0.02		0.22		0.44		0.56		0.67		0.83		0.98	
x/c	U.S.	L.S.	U.S.	L.S.	U.S.	L.S.	U.S.	L.S.	U.S.	L.S.	U.S.	L.S.	U.S.	L.S.
.05	.1792	.0425	.4111	.0352			.4220	.0266			.3742	.0256	.4642	.0294
.10	.1626	.0147					.4552	.0301	.4475	.0301			.4715	.0255
.15					.4407	.0221	.4531	.0237	.4617	.0254			.4258	.0199
.20	.1533	.0199					.4508	.0212	.4594	.0210			.3966	.0158
.25	.0583	.0014	.2156	.0062	.4369	.0149	.4494	.0191	.4562	.0196	.4474	.0164	.3978	.0133
.30			.1357	-.0374			.4409	.0126	.4518	.0174	.4564	.0131	.3835	.0131
.40	.1331	-.0036							.2005	-.0355	.4375	.0050	.3736	.0118
.50					.1478	-.0400	.1601	-.0451	.1681	-.0447	.1936	-.0415	.3342	-.0022
.60	.0460	-.0337	.0973	-.0398			.1587	-.0516	.1602	-.0454	.1249	-.0521	.0122	-.0526
.70					.1251	-.0455	.0728	-.0500	.0332	-.0384	.0197	-.0490	-.0103	-.0453
.80	-.0115	-.0493	-.0090	-.0488	.0096	-.0461	.0070	-.0501			.0054	-.0486		
.90	-.0363	-.0529	-.0284	-.0504	-.0074	-.0479	-.0044	-.0493	-.0017	-.0476	-.0001	-.0472	-.0234	-.0442
.95			-.0329	-.0513	-.0116	-.0477	-.0091	-.0492	-.0047	-.0485	-.0060	-.0488	-.0309	-.0493

TAIL 2

TABLE XVIII. - CONTINUED

(f) α = 5.85°

	Cp at y/b of													
	0.02		0.22		0.44		0.56		0.67		0.83		0.98	
x/c	U.S.	L.S.	U.S.	L.S.	U.S.	L.S.	U.S.	L.S.	U.S.	L.S.	U.S.	L.S.	U.S.	L.S.
.05			.1680	.2236	.1654	.2134	.1641	.2463					.1920	
.10	.0920	.1374	.1671	.2247	.1655	.2280			.1701	.2266	.1647		.1955	.2506
.15	.0910	.1302	.1611	.2136	.1637	.2182			.1658	.2195			.1574	.2154
.20	.0779	.1223	.1555	.2163	.1601	.2182	.1495	.2201	.1636	.2203	.1720	.2297	.1479	.2043
.25	.0073	.0184			.1579	.2148	.1584	.2252	.1641	.2204	.1638	.2275	.1381	.1933
.30	.0053	.0178							.1515	.2171	.1674	.2229	.1315	.1803
.40	.0034	.0112	.0143	.0299	.0190	.0360	.0301	.0381	.0425	.0605	.1503	.2118	.1257	.1685
.50			.0051	.0161	.0103	.0236	.0152	.0227			.0448	.0645	.1146	.1454
.60					.0073	.0195	.0256	.0315	.0127	.0223	.0113	.0242	-.0340	-.0312
.70	-.0046	.0118	-.0014	.0109	.0014	.0119	-.0045	-.0115	-.0362	-.0381	-.0471	-.0412	-.0433	-.0440
.80	-.0412	-.0294	-.0437	-.0332			-.0464	-.0549	-.0415	-.0414	-.0507	-.0506	-.0422	-.0364
.90	-.0387	-.0426	-.0381	-.0422	-.0282	-.0358	-.0393	-.0528	-.0420	-.0456	-.0431	-.0466		
.95	-.0369	-.0410	-.0374	-.0392			-.0375	-.0493	-.0406	-.0420	-.0412	-.0427		-.0508

TAIL 1

	Cp at y/b of													
	0.02		0.22		0.44		0.56		0.67		0.83		0.98	
x/c	U.S.	L.S.	U.S.	L.S.	U.S.	L.S.	U.S.	L.S.	U.S.	L.S.	U.S.	L.S.	U.S.	L.S.
.05	.1321	.0485	.3156	.0589			.3417	.0458			.2965	.0419	.3729	.0492
.10	.1155	.0204					.3682	.0527	.3645	.0483			.3752	.0432
.15					.3481	.0464	.3661	.0465	.3758	.0485			.3398	.0353
.20	.1099	.0304					.3643	.0441	.3753	.0440			.3155	.0285
.25	.0400	.0118	.1568	.0253	.3476	.0398	.3616	.0421	.3710	.0421	.3645	.0370	.3173	.0240
.30			.0857	-.0298			.3539	.0350	.3676	.0397	.3728	.0353	.3095	.0225
.40	.0866	-.0029							.1521	-.0245	.3580	.0258	.2997	.0195
.50					.1003	-.0342	.1106	-.0377	.1200	-.0361	.1463	-.0334	.2699	.0040
.60	.0079	-.0324	.0542	-.0365			.1070	-.0446	.1109	-.0385	.0881	-.0497	-.0024	-.0502
.70					.0806	-.0427	.0437	-.0510	.0074	-.0390	-.0017	-.0486	-.0221	-.0450
.80	-.0313	-.0482	-.0258	-.0483	-.0122	-.0446	-.0136	-.0492			-.0151	-.0480		
.90	-.0446	-.0515	-.0419	-.0491	-.0270	-.0467	-.0232	-.0481	-.0214	-.0468	-.0201	-.0468	-.0281	-.0432
.95			-.0451	-.0498	-.0307	-.0464	-.0274	-.0480	-.0248	-.0476	-.0253	-.0482	-.0362	-.0483

TAIL 2

TABLE XVIII. - CONTINUED

(g) α = 7.35°

	Cp at y/b of													
	0.02		0.22		0.44		0.56		0.67		0.83		0.98	
x/c	U.S.	L.S.	U.S.	L.S.	U.S.	L.S.	U.S.	L.S.	U.S.	L.S.	U.S.	L.S.	U.S.	L.S.
.05			.1935	.2526	.1893	.2377	.1862	.2738					.2158	
.10	.1150	.1634	.1932	.2534	.1830	.2539			.1932	.2594	.1855		.2129	.2553
.15	.1131	.1566	.1858	.2484	.1865	.2421			.1877	.2510			.1754	.2346
.20	.0970	.1469	.1808	.2424	.1830	.2441	.1613	.2314	.1848	.2496	.1933	.2557	.1639	.2240
.25	.0157	.0232			.1905	.2403	.1815	.2487	.1855	.2485	.1912	.2529	[illegible]	.2102
.30	.0167	.0280							.1809	.2435	.1888	.2478	.1473	.2006
.40	.0123	.0212	.0242	.0414	.0269	.0444	.0325	.0502	.0436	.0735	.1812	.2358	.1462	.1914
.50			.0132	.0258	.0163	.0306	.0167	.0325			.0566	.0744	.1355	.1667
.60					.0116	.0250	.0203	.0353	.0093	.0303	.0200	.0329	-.0250	-.0259
.70	.0017	.0198	.0069	.0203	.0049	.0186	-.0079	-.0019	-.0479	-.0370	-.0440	-.0379	-.0301	-.0372
.80	-.0390	-.0254	-.0411	-.0356			-.0562	-.0502	-.0404	-.0397	-.0487	-.0481	-.0519	-.0479
.90	-.0355	-.0397	-.0350	-.0399	-.0349	-.0380	-.0485	-.0480	-.0391	-.0426	-.0402	-.0430		
.95	-.0336	-.0382	-.0342	-.0363			-.0459	-.0439	-.0373	-.0389	-.0382	-.0390		-.0461

TAIL 1

	Cp at y/b of													
	0.02		0.22		0.44		0.56		0.67		0.83		0.98	
x/c	U.S.	L.S.	U.S.	L.S.	U.S.	L.S.	U.S.	L.S.	U.S.	L.S.	U.S.	L.S.	U.S.	L.S.
.05	.0656	.0562	.2196	.0812			.2493	.0659			.2372	.0658	.3143	.0733
.10	.0680	.0292					.2727	.0776	.2762	.0705			.3130	.0668
.15					.2609	.0728	.2762	.0725	.2776	.0735			.2819	.0571
.20	.0630	.0392					.2766	.0698	.2788	.0695			.2563	.0485
.25	.0224	.0254	.1069	.0472	.2631	.0671	.2770	.0681	.2820	.0675	.2753	.0605	.2517	.0413
.30			.0450	-.0190			.2702	.0599	.2820	.0648	.2812	.0610	.2448	.0384
.40	.0705	-.0011							.1056	-.0116	.2677	.0515	.2333	.0326
.50					.0623	-.0261	.0666	-.0277	.0787	-.0257	.0940	-.0229	.2028	.0135
.60	-.0075	-.0309	.0203	-.0314			.0613	-.0346	.0699	-.0289	.0490	-.0433	-.0185	-.0506
.70					.0418	-.0357	.0140	-.0495	-.0049	-.0412	-.0181	-.0491	-.0295	-.0454
.80	-.0353	-.0463	-.0380	-.0477	-.0259	-.0440	-.0303	-.0483			-.0284	-.0478		
.90	-.0451	-.0507	-.0500	-.0479	-.0393	-.0454	-.0376	-.0468	-.0327	-.0469	-.0319	-.0467	-.0342	-.0458
.95			-.0486	-.0487	-.0410	-.0449	-.0406	-.0467	-.0359	-.0480	-.0368	-.0478	-.0414	-.0508

TAIL 2

TABLE XVIII. - CONTINUED
(h) α = 9.35°

	Cp at y/b of													
	0.02		0.22		0.44		0.56		0.67		0.83		0.98	
x/c	U.S.	L.S.	U.S.	L.S.	U.S.	L.S.	U.S.	L.S.	U.S.	L.S.	U.S.	L.S.	U.S.	L.S.
.05			.2278	.2905	.2191	.2693	.2091	.3041					.2401	
.10	.1456	.2003	.2278	.2908	.2191	.2873			.2186	.2983	.2127		.2372	.3145
.15	.1425	.1899	.2209	.2857	.2167	.2741			.2175	.2774			.1955	.2597
.20	.1234	.1776	.2147	.2788	.2127	.2770	.1921	.2437	.2136	.2757	.2207	.2874	.1852	.2499
.25	.0317	.0440			.2099	.2738	.2085	.2754	.2150	.2742	.2182	.2839	.1753	.2355
.30	.0322	.0426							.2115	.2693	.2162	.2730	.1692	.2255
.40	.0274	.0353	.0396	.0569	.0407	.0538	.0453	.0640	.0623	.0894	.2077	.2662	.1676	.2121
.50			.0273	.0399	.0313	.0467	.0263	.0468			.0701	.0899	.1601	.1941
.60					.0269	.0409	.0245	.0409	.0234	.0439	.0326	.0434	-.0200	-.0203
.70	.0134	.0327	.0192	.0330	.0180	.0332	.0008	.0087	-.0416	-.0295	-.0394	-.0335	-.0247	-.0305
.80	-.0343	-.0190	-.0369	-.0304			-.0549	-.0444	-.0370	-.0368	-.0439	-.0445	-.0491	-.0433
.90	-.0313	-.0353	-.0300	-.0363	-.0317	-.0334	-.0456	-.0427	-.0326	-.0388	-.0346	-.0379		
.95	-.0283	-.0340	-.0289	-.0320			-.0434	-.0381	-.0304	-.0343	-.0323	-.0336		-.0489

TAIL 1

	Cp at y/b of													
	0.02		0.22		0.44		0.56		0.67		0.83		0.98	
x/c	U.S.	L.S.	U.S.	L.S.	U.S.	L.S.	U.S.	L.S.	U.S.	L.S.	U.S.	L.S.	U.S.	L.S.
.05	.0446	.0698	.1739	.1063			.2149	.0910			.2074	.1037	.2821	.1022
.10	.0420	.0471					.2256	.1077	.2390	.1076			.2791	.0966
.15					.1920	.1015	.2198	.1030	.2366	.1040			.2530	.0868
.20	.0374	.0551					.2112	.0996	.2309	.0997			.2252	.0773
.25	-.0023	.0464	.0570	.0683	.1846	.0965	.2071	.0974	.2255	.0977	.2386	.0956	.2196	.0686
.30			.0125	-.0066			.2005	.0879	.2208	.0950	.2425	.0970	.2125	.0636
.40	.0534	.0018							.0550	.0044	.2296	.0836	.2013	.0556
.50					.0292	-.0133	.0287	-.0142	.0412	-.0121	.0692	-.0060	.1729	.0331
.60	-.0171	-.0246	-.0011	-.0226			.0213	-.0215	.0325	-.0169	.0252	-.0323	-.0254	-.0477
.70					.0144	-.0242	-.0113	-.0438	-.0170	-.0426	-.0298	-.0506	-.0315	-.0466
.80	-.0370	-.0420	-.0475	-.0507	-.0378	-.0456	-.0427	-.0493			-.0391	-.0468		
.90	-.0425	-.0508	-.0486	-.0482	-.0459	-.0453	-.0467	-.0464	-.0423	-.0451	-.0409	-.0448	-.0386	-.0387
.95			-.0477	-.0484	-.0433	-.0445	-.0452	-.0460	-.0428	-.0458	-.0442	-.0461	-.0456	-.0465

TAIL 2

TABLE XVIII. - CONTINUED

(i) α = 11.95°

	Cp at y/b of													
	0.02		0.22		0.44		0.56		0.67		0.83		0.98	
x/c	U.S.	L.S.	U.S.	L.S.	U.S.	L.S.	U.S.	L.S.	U.S.	L.S.	U.S.	L.S.	U.S.	L.S.
.05			.2656	.3374	.2527	.3084	.2377	.3532					.2593	
.10	.1797	.2421	.2663	.3368	.2536	.3284			.2557	.3303	.2424		.2596	.3466
.15	.1753	.2298	.2588	.3315	.2508	.3148			.2502	.3188			.2157	.2898
.20	.1531	.2147	.2525	.3247	.2469	.3174	.2165	.2832	.2462	.3160	.2517	.3233	.2089	.2806
.25	.0484	.0629			.2442	.3139	.2461	.3207	.2464	.3153	.2489	.3206	.1993	.2662
.30	.0495	.0612							.2430	.3089	.2471	.3157	.1959	.2562
.40	.0438	.0550	.0576	.0761	.0550	.0805	.0623	.0844	.0754	.1094	.2379	.3017	.1940	.2469
.50			.0421	.0581	.0455	.0654	.0427	.0648			.0865	.1049	.1970	.2242
.60					.0410	.0597	.0320	.0532	.0368	.0586	.0462	.0570	-.0140	-.0134
.70	.0272	.0500	.0343	.0492	.0333	.0518	.0134	.0220	-.0367	-.0264	-.0339	-.0276	-.0231	-.0262
.80	-.0278	-.0107	-.0305	-.0238			-.0505	-.0397	-.0332	-.0327	-.0381	-.0395	-.0288	-.0361
.90	-.0264	-.0292	-.0232	-.0313	-.0306	-.0303	-.0393	-.0386	-.0261	-.0333	-.0281	-.0315		
.95	-.0215	-.0280	-.0215	-.0253			-.0369	-.0328	-.0240	-.0283	-.0255	-.0270		-.0526

TAIL 1

	Cp at y/b of													
	0.02		0.22		0.44		0.56		0.67		0.83		0.98	
x/c	U.S.	L.S.	U.S.	L.S.	U.S.	L.S.	U.S.	L.S.	U.S.	L.S.	U.S.	L.S.	U.S.	L.S.
.05	.0388	.0890	.1667	.1346			.2037	.1191			.1907	.1303	.2550	.1330
.10	.0295	.0637					.2112	.1408	.2215	.1376			.2596	.1296
.15					.1787	.1336	.2042	.1364	.2194	.1375			.2374	.1195
.20	.0209	.0746					.1957	.1322	.2135	.1335			.2084	.1094
.25	-.0188	.0606	.0388	.0933	.1691	.1289	.1903	.1298	.2070	.1317	.2195	.1313	.2016	.0993
.30			-.0048	.0048			.1827	.1191	.2017	.1284	.2222	.1328	.1935	.0921
.40	.0386	.0051							.0559	.0223	.2089	.1183	.1830	.0841
.50					.0131	-.0009	.0190	-.0005	.0318	.0031	.0577	.0106	.1567	.0552
.60	-.0253	-.0162	-.0188	-.0133			.0099	-.0074	.0232	-.0022	.0164	-.0216	-.0297	-.0436
.70					-.0069	-.0123	-.0217	-.0354	-.0245	-.0399	-.0357	-.0511	-.0338	-.0457
.80	-.0400	-.0370	-.0484	-.0509	-.0459	-.0500	-.0500	-.0552			-.0443	-.0483		
.90	-.0436	-.0496	-.0485	-.0509	-.0453	-.0484	-.0481	-.0503	-.0459	-.0465	-.0451	-.0443	-.0411	-.0386
.95			-.0486	-.0500	-.0437	-.0464	-.0460	-.0484	-.0446	-.0463	-.0455	-.0448	-.0456	-.0423

TAIL 2

TABLE XVIII. - CONTINUED
(j) α = 15.34°

	Cp at y/b of													
	0.02		0.22		0.44		0.56		0.67		0.83		0.98	
x/c	U.S.	L.S.	U.S.	L.S.	U.S.	L.S.	U.S.	L.S.	U.S.	L.S.	U.S.	L.S.	U.S.	L.S.
.05			.3629	.4524	.3356	.4031	.3034	.4489					.2134	
.10	.2634	.3401	.3650	.4502	.3397	.4284			.3297	.4264	.3121		.1692	.2339
.15	.2553	.3234	.3554	.4441	.3367	.4130			.3227	.4097			.1610	.2413
.20	.2289	.3024	.3473	.4359	.3327	.4177	.2599	.3416	.3229	.4089	.3251	.4104	.1735	.2527
.25	.0915	.1079			.3237	.4143	.3227	.4138	.3252	.4063	.3222	.4064	.1854	.2548
.30	.0953	.1086							.3212	.3987	.3213	.4005	.1981	.2578
.40	.0885	.1027	.1030	.1257	.0992	.1288	.1061	.1358	.1252	.1517	.3104	.3835	.2180	.2631
.50			.0837	.1046	.0881	.1134	.0827	.1114			.1231	.1417	.2205	.2455
.60					.0824	.1068	.0490	.0723	.0818	.1012	.0769	.0875	.0020	.0208
.70	.0658	.0991	.0735	.0913	.0743	.0981	.0468	.0576	-.0101	-.0058	-.0224	-.0162	-.0128	-.0148
.80	-.0105	.0111	-.0150	-.0064			-.0335	-.0228	-.0242	-.0221	-.0211	-.0291	-.0320	-.0251
.90	-.0106	-.0122	-.0068	-.0156	-.0184	-.0210	-.0206	-.0267	-.0133	-.0198	-.0115	-.0159		
.95	-.0038	-.0079	-.0038	-.0083			-.0163	-.0189	-.0104	-.0126	-.0093	-.0117		-.0366

TAIL 1

	Cp at y/b of													
	0.02		0.22		0.44		0.56		0.67		0.83		0.98	
x/c	U.S.	L.S.	U.S.	L.S.	U.S.	L.S.	U.S.	L.S.	U.S.	L.S.	U.S.	L.S.	U.S.	L.S.
.05	.0445	.1415	.1745	.2087			.2047	.1888			.1825	.2033	.2564	.2087
.10	.0297	.1132					.2096	.2233	.2159	.2162			.2480	.2114
.15					.1782	.2151	.2001	.2183	.2134	.2210			.2309	.2004
.20	.0213	.1269					.1909	.2148	.2068	.2170			.2015	.1882
.25	-.0250	.1064	.0361	.1521	.1651	.2077	.1833	.2110	.1981	.2155	.2083	.2159	.1913	.1718
.30			-.0094	.0359			.1737	.1975	.1922	.2116	.2101	.2196	.1802	.1665
.40	.0288	.0140							.0514	.0670	.1950	.2063	.1698	.1551
.50					.0078	.0312	.0146	.0361	.0265	.0436	.0493	.0473	.1449	.1148
.60	-.0347	.0037	-.0279	.0124			.0045	.0295	.0174	.0360	.0096	.0042	-.0318	-.0360
.70					-.0129	.0180	-.0264	-.0134	-.0287	-.0307	-.0398	-.0426	-.0348	-.0391
.80	-.0415	-.0210	-.0498	-.0405	-.0503	-.0416	-.0530	-.0452			-.0459	-.0472		
.90	-.0453	-.0458	-.0518	-.0514	-.0492	-.0499	-.0481	-.0493	-.0419	-.0463	-.0397	-.0431	-.0368	-.0388
.95			-.0523	-.0537	-.0475	-.0507	-.0463	-.0504	-.0419	-.0468	-.0393	-.0413	-.0412	-.0431

TAIL 2

TABLE XVIII. - CONCLUDED

(k) α = 19.95°

	Cp at y/b of													
	0.02		0.22		0.44		0.56		0.67		0.83		0.98	
x/c	U.S.	L.S.	U.S.	L.S.	U.S.	L.S.	U.S.	L.S.	U.S.	L.S.	U.S.	L.S.	U.S.	L.S.
.05			.4855	.5985	.4395	.5247	.3968	.5744					.2231	
.10	.3721	.4668	.4882	.5935	.4480	.5573			.4083	.5146	.1869		.1517	.2153
.15	.3555	.4431	.4749	.5872	.4444	.5386			.3940	.4820			.1461	.2218
.20	.3234	.4155	.4650	.5788	.4405	.5454	.3432	.4283	.3906	.4766	.1850	.2533	.1493	.2236
.25	.1509	.1715			.4368	.5410	.4300	.5305	.3900	.4672	.1847	.2508	.1532	.2215
.30	.1563	.1719							.3754	.4568	.1913	.2532	.1584	.2199
.40	.1519	.1686	.1627	.1915	.1602	.1902	.1670	.1947	.1511	.1870	.1840	.2415	.1543	.2213
.50			.1416	.1662	.1512	.1748	.1383	.1645			.0548	.0726	.1660	.2134
.60					.1475	.1657	.0800	.1031	.1086	.1355	.0213	.0345	-.0333	-.0292
.70	.1220	.1627	.1238	.1453	.1352	.1565	.0899	.0993	-.0104	.0064	-.0377	-.0298	-.0530	-.0405
.80	.0156	.0432	.0074	.0170			-.0166	.0011	-.0184	-.0133	-.0341	-.0327	-.0604	-.0572
.90	.0194	.0125	.0184	.0055	-.0014	-.0024	-.0086	-.0069	-.0113	-.0157	-.0314	-.0289		
.95	.0248	.0254	.0232	.0169			.0000	.0054	-.0039	-.0075	-.0304	-.0275		-.0518

TAIL 1

	Cp at y/b of													
	0.02		0.22		0.44		0.56		0.67		0.83		0.98	
x/c	U.S.	L.S.	U.S.	L.S.	U.S.	L.S.	U.S.	L.S.	U.S.	L.S.	U.S.	L.S.	U.S.	L.S.
.05	.0608	.2115	.1972	.3087			.2224	.2842			.1891	.3010	.2671	.3117
.10	.0397	.1820					.2250	.3333	.2279	.3243			.2552	.3223
.15					.1940	.3230	.2135	.3282	.2261	.3325			.2381	.3099
.20	.0259	.2042					.2029	.3244	.2180	.3287			.2115	.2898
.25	-.0233	.1660	.0408	.2354	.1775	.3120	.1931	.3189	.2076	.3261	.2155	.3311	.1982	.2762
.30			-.0084	.0846			.1825	.3018	.2010	.3198	.2169	.3372	.1839	.2641
.40	.0235	.0289							.0530	.1281	.2008	.3157	.1731	.2516
.50					.0087	.0797	.0170	.0892	.0274	.1007	.0504	.1008	.1474	.2007
.60	-.0391	.0360	-.0303	.0643			.0061	.0827	.0186	.0914	.0101	.0518	-.0306	-.0180
.70					-.0132	.0624	-.0258	.0204	-.0302	-.0137	-.0405	-.0208	-.0339	-.0268
.80	-.0443	.0041	-.0529	-.0224	-.0512	-.0260	-.0512	-.0266			-.0391	-.0293		
.90	-.0517	-.0337	-.0552	-.0384	-.0494	-.0374	-.0447	-.0342	-.0364	-.0323	-.0339	-.0315	-.0296	-.0236
.95			-.0552	-.0425	-.0475	-.0401	-.0435	-.0376	-.0383	-.0359	-.0338	-.0335	-.0339	-.0302

TAIL 2

TABLE XIX. - PRESSURE COEFFICIENTS, $\phi = 45^\circ$, $\delta = -15^\circ$, $M = 1.60$

(a) $\alpha = -3.25^\circ$

	Cp at y/b of													
	0.02		0.22		0.44		0.56		0.67		0.83		0.98	
x/c	U.S.	L.S.	U.S.	L.S.	U.S.	L.S.	U.S.	L.S.	U.S.	L.S.	U.S.	L.S.	U.S.	L.S.
.05	.2366	.0205	.9742	-.3035	.9700	-.3655	1.0352	-.3833	1.0243	-.3907				
.10	.2629	-.0148	.9844	-.2506	.9759	-.3198			.9904	-.3629	.9595	-.2801		
.15	.3123	-.0425	.9383	-.2140	.9001	-.2751			.9113	-.3221			.6931	-.3767
.20	.3383	-.0733	.7763	-.1827	.8137	-.2477	.8346	-.2347	.8427	-.2938	.8655	-.3055	.6630	-.3349
.25					.7247	-.2301	.7552	-.2453	.7823	-.2761	.8173	-.2333	.5722	-.2766
.30	.4004	-.1857							.5982	-.2625	.7407	-.2810	.5121	-.2365
.40	.4529	-.2334	.4561	-.3135	.4172	-.3808	.3435	-.3786	.3637	-.3757	.5018	-.2534	.4236	-.2260
.50			.4617	-.2851	.5316	-.3780	.5719	-.3891			.3678	-.3887		
.60					.5004	-.3655	.5250	-.3738			.3968	-.4086	-.0007	-.4609
.70	.3743	-.2793	.3908	-.2987	.4509	-.3512	.3831	-.4116	.0017	-.4028	-.0197	-.4119	-.1631	-.4720
.80	-.1993	-.3658	-.0412	-.4037			-.0070	-.4167	-.0205	-.4038	-.0478	-.4140	-.1652	-.4642
.90	-.1557	-.3922	-.0810	-.3829	-.0281	-.3922	-.0274	-.4068	-.0282	-.4020	-.0609	-.4104	-.1673	-.4573
.95	-.1360	-.3789	-.1019	-.3485			-.0377	-.3922	-.0410	-.3985	-.0740	-.4074	-.1789	-.4470

TAIL 1

	Cp at y/b of													
	0.02		0.22		0.44		0.56		0.67		0.83		0.98	
x/c	U.S.	L.S.	U.S.	L.S.	U.S.	L.S.	U.S.	L.S.	U.S.	L.S.	U.S.	L.S.	U.S.	L.S.
.05	.6106	-.2746	1.2560	-.3811			1.2150	-.4088					.9762	-.3869
.10	.6307	-.0819					1.1424	-.3967	1.1390	-.3998			.9375	-.3925
.15					1.0301	-.3280	1.0762	-.3532	1.0869	-.3604	1.0248	-.2804		
.20	.8197	-.0169					1.0012	-.3171	1.0246	-.3208			.7610	-.2971
.25	.5168	-.1025	.4019	-.2802	.8895	-.2812	.9309	-.2963	.9532	-.2968	.9505	-.3356	.7154	-.3011
.30			.5745	-.3327			.8455	-.2907	.8888	-.2890	.8936	-.3197	.6543	-.3016
.40	.8343	-.1404							.6177	-.3797	.7161	-.2984	.5622	-.3323
.50					.7582	-.3570	.7421	-.3591	.7077	-.3577	.5119	-.3127	.3737	-.3726
.60	.6558	.0103	.7337	-.0488			.6871	-.3462	.6445	-.3512	.3746	-.2773	-.1233	-.3942
.70					.5882	-.2593	.2133	-.3331	.0658	-.3194	.0231	-.2597	-.1036	-.3967
.80	-.0630	-.1629	.1013	-.2709	.0877	-.3735	.0677	-.3282			.0121	-.2620		
.90	.2323	-.2369	.0756	-.2413	.0758	-.3322	.0685	-.2879	.0431	-.2973	.0015	-.2632	-.1020	-.3828
.95			.0568	-.1097	.0740	-.2488	.0668	-.2434	.0350	-.2892	-.0087	-.2636	-.1114	-.3761

TAIL 2

TABLE XIX. - CONTINUED

(b) α = -1.25°

	Cp at y/b of													
	0.02		0.22		0.44		0.56		0.67		0.83		0.98	
x/c	U.S.	L.S.	U.S.	L.S.	U.S.	L.S.	U.S.	L.S.	U.S.	L.S.	U.S.	L.S.	U.S.	L.S.
.05	.3883	.0344	.9833	-.2547	.9318	-.3388	1.0150	-.3514	1.0115	-.3567				
.10	.3868	-.0152	.8806	-.1966	.9397	-.2815			.9754	-.3122	.9350	-.2823		
.15	.4255	-.0317	.8118	-.1566	.8605	-.2355			.8955	-.2690			.6846	-.3416
.20	.4221	-.0556	.7371	-.1334	.7753	-.2079	.8123	-.2209	.9270	-.2405	.8481	-.2529	.6423	-.2744
.25					.6832	-.1891	.7316	-.2023	.7664	-.2249	.7963	-.2399	.5527	-.1885
.30	.4001	-.1858							.6841	-.2133	.7153	-.2271	.4864	-.1619
.40	.4215	-.1763	.3307	-.3074	.3118	-.3552	.2758	-.3571	.2223	-.3528	.5678	-.2073	.4011	-.1707
.50			.4474	-.2657	.4616	-.3566	.4953	-.3668			.2158	-.3633		
.60					.4598	-.3455	.4911	-.3641			.3162	-.3881	-.2917	-.4422
.70	.3321	-.2496	.3519	-.2725	.4136	-.3302	.3600	-.3924	-.0114	-.3886	-.0181	-.3992	-.2238	-.4481
.80	-.2214	-.3519	-.0599	-.3945			-.0242	-.3990	-.0354	-.3892	-.0567	-.4057	-.1646	-.4566
.90	-.1903	-.3845	-.0912	-.3787	-.0461	-.3858	-.0484	-.3916	-.0477	-.3868	-.0728	-.4077	-.1633	-.4476
.95	-.1561	-.3827	-.1140	-.3437			-.0599	-.3804	-.0610	-.3838	-.0873	-.3988	-.1759	-.4381

TAIL 1

	Cp at y/b of													
	0.02		0.22		0.44		0.56		0.67		0.83		0.98	
x/c	U.S.	L.S.	U.S.	L.S.	U.S.	L.S.	U.S.	L.S.	U.S.	L.S.	U.S.	L.S.	U.S.	L.S.
.05	.5474	-.1110	1.1701	-.3287			1.1493	-.3770					.9034	-.3700
.10	.5533	-.0406					1.0709	-.3496	1.0766	-.3521			.9046	-.3782
.15					.9522	-.2806	1.0023	-.2955	1.0246	-.3016	1.0036	-.2910		
.20	.6671	.0343					.9264	-.2633	.9620	-.2694			.7196	-.2654
.25	.3857	-.0431	.3047	-.2250	.7978	-.2309	.8554	-.2455	.8913	-.2513	.8999	-.2883	.6724	-.2412
.30			.3584	-.3023			.7689	-.2432	.8258	-.2466	.8416	-.2691	.6112	-.2314
.40	.7266	-.1283							.5342	-.3822	.6645	-.2541	.5188	-.2183
.50					.6979	-.3379	.6910	-.3785	.6779	-.3654	.4413	-.3027	.3351	-.2480
.60	.5717	.0015	.6670	-.0470			.6487	-.3455	.6121	-.3447	.3537	-.2801	-.1571	-.3868
.70					.5567	-.2436	.1994	-.3302	.0526	-.3087	.0122	-.2712	-.1228	-.3783
.80	-.0790	-.1623	.0848	-.2763	.0741	-.3633	.0480	-.3152			-.0074	-.2722		
.90	.2010	-.2384	.0547	-.2463	.0539	-.3045	.0433	-.2939	.0172	-.2951	-.0230	-.2747	-.1283	-.3723
.95			.0346	-.1133	.0501	-.1781	.0410	-.2439	.0065	-.2935	-.0343	-.2725	-.1398	-.3625

TAIL 2

TABLE XIX. - CONTINUED

(c) α = 0.75°

	Cp at y/b of													
	0.02		0.22		0.44		0.56		0.67		0.83		0.98	
x/c	U.S.	L.S.	U.S.	L.S.	U.S.	L.S.	U.S.	L.S.	U.S.	L.S.	U.S.	L.S.	U.S.	L.S.
.05	.4934	.0464	.9433	-.2130	.9094	-.2934	1.0030	-.3020	.9983	-.3193				
.10	.4577	.0054	.8459	-.1508	.9179	-.2299			.3657	-.2536	.9271	-.2837		
.15	.4915	-.0086	.7736	-.1176	.8384	-.1846			.8827	-.2095			.6492	-.2987
.20	.4847	-.0210	.6921	-.0975	.7555	-.1589	.7973	-.1754	.8140	-.1762	.8387	-.2011	.6254	-.2133
.25					.6668	-.1471	.7176	-.1548	.7550	-.1635	.7870	-.1949	.5373	-.1053
.30	.3378	-.1758							.6755	-.1559	.7058	-.1703	.4735	-.3991
.40	.3918	-.1276	.2853	-.2831	.2458	-.3333	.2061	-.3317	.1192	-.3293	.5607	-.1535	.3926	-.3915
.50			.3673	-.2617	.3562	-.3337	.3164	-.3447			.0795	-.3371		
.60					.4275	-.3183	.4453	-.3445			.1325	-.3660	-.3077	-.4119
.70	.3078	-.2181	.2970	-.2473	.3892	-.3028	.3441	-.3744	-.0177	-.3743	-.0705	-.3891	-.2936	-.4155
.80	-.2327	-.3339	-.0807	-.3840			-.0387	-.3865	-.0484	-.3747	-.0762	-.3955	-.2518	-.4586
.90	-.2027	-.3731	-.1044	-.3714	-.0685	-.3744	-.0636	-.3825	-.0621	-.3727	-.0890	-.4008	-.1944	-.4706
.95	-.1601	-.3792	-.1224	-.3394			-.0760	-.3712	-.0743	-.3697	-.1030	-.3922	-.1813	-.4713

TAIL 1

	Cp at y/b of													
	0.02		0.22		0.44		0.56		0.67		0.83		0.98	
x/c	U.S.	L.S.	U.S.	L.S.	U.S.	L.S.	U.S.	L.S.	U.S.	L.S.	U.S.	L.S.	U.S.	L.S.
.05	.4590	.0069	1.0753	-.2721			1.0819	-.3449					.9275	-.3424
.10	.4600	-.0103					.9929	-.2962	.9925	-.3033			.8400	-.3398
.15					.8842	-.2326	.9178	-.2368	.9345	-.2543	.9452	-.2743		
.20	.5167	.0519					.8338	-.2096	.8671	-.2259			.6655	-.2342
.25	.3082	-.0175	.2628	-.1600	.7177	-.1800	.7492	-.1981	.7876	-.2108	.8273	-.2431	.6154	-.1845
.30			.2241	-.2622			.6456	-.2038	.7182	-.2057	.7689	-.2172	.5529	-.1719
.40	.5710	-.1109							.3854	-.3532	.5967	-.2085	.4630	-.1544
.50					.6633	-.3187	.6836	-.3566	.6186	-.3662	.3254	-.3104	.2874	-.1782
.60	.4520	-.0071	.6029	-.0398			.6152	-.3510	.5755	-.3406	.3431	-.2864	-.2256	-.3538
.70					.5327	-.2387	.1760	-.3631	.0395	-.3165	-.0070	-.2829	-.1517	-.3491
.80	-.1050	-.1613	.0406	-.2809	.0463	-.3224	.0322	-.3193			-.0327	-.2800		
.90	.1464	-.2301	.0178	-.2469	.0143	-.2256	.0186	-.2838	-.0043	-.3002	-.0506	-.2775	-.1518	-.3491
.95			.0015	-.1267	.0113	-.0997	.0127	-.2314	-.0158	-.2972	-.0623	-.2737	-.1625	-.3425

TAIL 2

TABLE XIX. - CONTINUED

(d) $\alpha = 2.75°$

C_p at y/b of

	0.02		0.22		0.44		0.56		0.67		0.83		0.98	
x/c	U.S.	L.S.	U.S.	L.S.	U.S.	L.S.	U.S.	L.S.	U.S.	L.S.	U.S.	L.S.	U.S.	L.S.
.05	.5397	.0444	.9151	-.1570	.8893	-.2373	.9852	-.2446	.9841	-.2720				
.10	.5274	.0281	.8155	-.0991	.8966	-.1704			.9527	-.1833	.9287	-.2350		
.15	.5558	.0146	.7448	-.0636	.8178	-.1246			.8678	-.1388			.5939	-.2472
.20	.5381	.0146	.6639	-.0508	.7385	-.1008	.7799	-.1176	.8025	-.1144	.8265	-.1387	.6163	-.1372
.25					.6526	-.0936	.7057	-.1008	.7454	-.1031	.7741	-.1220	.5215	-.0239
.30	.2399	-.1612							.6662	-.0962	.6933	-.1090	.4617	-.0358
.40	.3563	-.0863	.2471	-.2551	.1976	-.3077	.1500	-.3027	.0889	-.3048	.5489	-.1012	.3837	-.0444
.50			.3127	-.2390	.2753	-.3104	.2545	-.3174			.0455	-.3075		
.60					.3447	-.2952	.3127	-.3179			.0798	-.3400	-.3114	-.3897
.70	.2563	-.1855	.2612	-.2127	.3642	-.2855	.2956	-.3531	-.0770	-.3621	-.1470	-.3775	-.3060	-.4146
.80	-.2494	-.3136	-.1066	-.3754			-.0483	-.3712	-.0749	-.3602	-.1434	-.3831	-.2734	-.4693
.90	-.2133	-.3569	-.1293	-.3753	-.0850	-.3616	-.0738	-.3751	-.0770	-.3596	-.1403	-.3866	-.2399	-.4771
.95	-.1643	-.3664	-.1404	-.3402			-.0864	-.3637	-.0876	-.3573	-.1472	-.3761	-.2336	-.4719

TAIL 1

C_p at y/b of

	0.02		0.22		0.44		0.56		0.67		0.83		0.98	
x/c	U.S.	L.S.	U.S.	L.S.	U.S.	L.S.	U.S.	L.S.	U.S.	L.S.	U.S.	L.S.	U.S.	L.S.
.05	.3657	.0380	.9504	-.2166			1.0261	-.3048					.7653	-.3114
.10	.3564	.0097					.9398	-.2370	.9345	-.2568			.7732	-.2974
.15					.8359	-.1551	.8677	-.1785	.8776	-.2076	.8920	-.2466		
.20	.3897	.0598					.7877	-.1551	.8116	-.1797			.6133	-.2026
.25	.2335	-.0058	.2270	-.0787	.6845	-.1240	.7090	-.1450	.7337	-.1635	.7678	-.1918	.5579	-.1500
.30			.1211	-.2286			.6094	-.1494	.6627	-.1604	.7067	-.1741	.4930	-.1276
.40	.4446	-.0921							.1160	-.3209	.5263	-.1659	.3983	-.1045
.50					.3698	-.2861	.3194	-.3276	.2399	-.3394	.0911	-.3366	.2285	-.1343
.60	.3463	-.0193	.4392	-.0380			.5097	-.3230	.4869	-.3410	.0585	-.2998	-.3195	-.2994
.70					.4727	-.1954	.1616	-.3630	.0220	-.3358	-.0548	-.2934	-.2923	-.3017
.80	-.1414	-.1700	.0009	-.2825	.0300	-.2933	.0150	-.3202			-.0477	-.2827		
.90	.0933	-.2179	-.0283	-.2410	-.0083	-.2467	-.0072	-.2907	-.0180	-.2975	-.0656	-.2769	-.1825	-.3197
.95			-.0529	-.1301	-.0177	-.1120	-.0165	-.2166	-.0366	-.2872	-.0807	-.2727	-.1595	-.3218

TAIL 2

TABLE XIX. - CONTINUED

(e) α = 4.75°

	Cp at y/b of													
	0.02		0.22		0.44		0.56		0.67		0.83		0.98	
x/c	U.S.	L.S.	U.S.	L.S.	U.S.	L.S.	U.S.	L.S.	U.S.	L.S.	U.S.	L.S.	U.S.	L.S.
.05	.6222	.0475	.8700	-.0853	.8645	-.1714	.9603	-.1792	.3634	-.2082				
.10	.5461	.0607	.7745	-.0349	.8720	-.0937			.3367	-.1078	.3218	-.1813		
.15	.5726	.0415	.7122	-.0156	.7946	-.0537			.3519	-.0679			.5424	-.1894
.20	.5412	.0402	.6331	.0015	.7188	-.0331	.7646	-.0662	.7872	-.0498	.8119	-.0576	[illegible]	[illegible]
.25					.6378	-.0292	.6301	-.0376	.7316	-.0400	.7585	-.0435	.5071	.0462
.30	.2150	-.1374							.6554	-.0359	.6785	-.0472	.4482	.0135
.40	.3053	-.0462	.2062	-.2250	.1540	-.2744	.1173	-.2687	.0753	-.2722	.5396	-.0422	.3752	.0031
.50			.2557	-.2140	.2224	-.2791	.2022	-.2854			.0303	-.2787		
.60					.2662	-.2678	.2501	-.2911			.0436	-.3107	-.3129	-.3762
.70	.2160	-.1510	.2254	-.1598	.3031	-.2649	.1920	-.3274	-.1149	-.3588	-.1667	-.3678	-.2875	-.4063
.80	-.2628	-.2936	-.1210	-.3632			-.0813	-.3575	-.1239	-.3517	-.1898	-.3692	-.2659	-.4610
.90	-.2296	-.3330	-.1501	-.3393	-.1001	-.3505	-.0948	-.3611	-.1201	-.3507	-.1855	-.3696	-.2446	-.4599
.95	-.1839	-.3444	-.1576	-.3251			-.1051	-.3507	-.1254	-.3478	-.1913	-.3594	-.2440	-.4511

TAIL 1

	Cp at y/b of													
	0.02		0.22		0.44		0.56		0.67		0.83		0.98	
x/c	U.S.	L.S.	U.S.	L.S.	U.S.	L.S.	U.S.	L.S.	U.S.	L.S.	U.S.	L.S.	U.S.	L.S.
.05	.2592	.0406	.8055	-.1600			.9666	-.2354					.7001	-.2773
.10	.2390	.0232					.8782	-.1522	.8807	-.1908			.7003	-.2550
.15					.7589	-.0874	.8105	-.1081	.8273	-.1427	.8467	-.2052		
.20	.2651	.0676					.7356	-.0922	.7670	-.1120			.5764	-.1602
.25	.1201	.0104	.1604	-.0171	.6283	-.0797	.6650	-.0865	.6961	-.0929	.7253	-.1341	.5229	-.1167
.30			.0277	-.2172			.5752	-.0962	.6297	-.0932	.6680	-.1141	.4586	-.0844
.40	.3375	-.0708							.0439	-.2912	.4942	-.1099	.3667	-.0712
.50					.2188	-.2487	.2087	-.2989	.1635	-.3076	.0299	-.3053	.2037	-.1053
.60	.2944	-.0330	.3594	-.0371			.2739	-.2877	.2276	-.3099	.0079	-.3031	-.3309	-.2783
.70					.3726	-.0926	.1140	-.3411	-.0708	-.3345	-.1685	-.2936	-.3241	-.2827
.80	-.1382	-.1727	-.0505	-.2932	-.0338	-.2818	-.0391	-.3148			-.1649	-.2883		
.90	.1942	-.2131	-.0902	-.2159	-.0591	-.2435	-.0583	-.2878	-.0670	-.3098	-.1574	-.2775	-.2772	-.2944
.95			-.0870	-.1115	-.0566	-.1163	-.0565	-.1773	-.0872	-.2913	-.1595	-.2732	-.2721	-.2956

TAIL 2

TABLE XIV. - CONTINUED

(f) α = 5.74°

	Cp at y/b of													
	0.02		0.22		0.44		0.56		0.67		0.83		0.98	
x/c	U.S.	L.S.	U.S.	L.S.	U.S.	L.S.	U.S.	L.S.	U.S.	L.S.	U.S.	L.S.	U.S.	L.S.
.05	.5831	.0686	.8072	-.0111	.3263	-.0913	.9244	-.0979	.9333	-.1234				
.10	.5097	.0924	.7132	.0302	.8351	-.0112			.9129	-.0227	.8942	-.0919		
.15	.5252	.0750	.6563	.0380	.7613	.0254			.9235	.0090			.5102	-.1002
.20	.4859	.0712	.5932	.0521	.6914	.0397	.7400	.0211	.7668	.0256	.7905	.0116	.5735	.0906
.25					.6166	.0367	.6718	.0353	.7147	.0334	.7387	.0215	.4894	.0887
.30	.1510	-.1064							.6422	.0350	.6627	.0229	.4347	.0611
.40	.2331	.0000	.1394	-.1959	.1111	-.2414	.0925	-.2337	.0641	-.2334	.5282	.0256	.3664	.0570
.50			.1910	-.1907	.1587	-.2164	.1466	-.2516			.0176	-.2491		
.60					.1941	-.2407	.1824	-.2524			.0134	-.2776	-.3116	-.3624
.70	.1894	-.1085	.1937	-.1234	.2059	-.2421	.1242	-.3008	-.1547	-.3690	-.2180	-.3673	-.2787	-.3886
.80	-.2695	-.2735	-.1387	-.3440			-.1343	-.3466	-.1681	-.3469	-.2257	-.3563	-.2607	-.4480
.90	-.2427	-.3070	-.1667	-.3397	-.1148	-.3406	-.1336	-.3453	-.1719	-.3434	-.2260	-.3567	-.2387	-.4341
.95	-.2046	-.3192	-.1708	-.3099			-.1367	-.3353	-.1786	-.3390	-.2329	-.3455	-.2394	-.4236

TAIL 1

	Cp at y/b of													
	0.02		0.22		0.44		0.56		0.67		0.83		0.98	
x/c	U.S.	L.S.	U.S.	L.S.	U.S.	L.S.	U.S.	L.S.	U.S.	L.S.	U.S.	L.S.	U.S.	L.S.
.05	.2288	.0562	.7012	-.0946			.8800	-.1637					.6127	-.2419
.10	.1987	.0413					.7946	-.0824	.8100	-.1304			.5760	-.2027
.15					.6735	-.0227	.7341	-.0442	.7606	-.0802	.7796	-.1473		
.20	.2246	.0848					.6689	-.0282	.7034	-.0390			.5399	-.1077
.25	.1108	.0196	.1058	.0174	.5663	-.0107	.6050	-.0223	.6378	-.0251	.6799	-.0721	.4865	-.0871
.30			-.0016	-.2002			.5248	-.0268	.5798	-.0327	.6269	-.0520	.4224	-.0634
.40	.3150	-.0634							.0130	-.2575	.4650	-.0529	.3369	-.0354
.50					.1792	-.1922	.1577	-.2480	.1083	-.2706	-.0006	-.2721	.1811	-.0818
.60	.3148	-.0410	.3477	-.0287			.2482	-.2202	.1687	-.2702	-.0336	-.2984	-.3403	-.2740
.70					.3407	-.0558	.0958	-.2679	-.0727	-.3232	-.2061	-.2812	-.3323	-.2781
.80	-.0755	-.1900	-.0659	-.2820	-.0433	-.2762	-.0558	-.2983			-.1991	-.2792		
.90	.1619	-.2410	-.0956	-.2153	-.0839	-.2663	-.0704	-.2710	-.0749	-.2832	-.1791	-.2642	-.2935	-.2708
.95			-.0147	-.1120	-.0897	-.1520	-.0757	-.1616	-.0965	-.2576	-.1760	-.2598	-.2753	-.2722

TAIL 2

TABLE XIX. - CONTINUED

(g) α = 8.75°

	Cp at y/b of													
	0.02		0.22		0.44		0.56		0.67		0.83		0.98	
x/c	U.S.	L.S.	U.S.	L.S.	U.S.	L.S.	U.S.	L.S.	U.S.	L.S.	U.S.	L.S.	U.S.	L.S.
.05	.5215	.0819	.7511	.0632	.7876	-.0095	.8829	-.0121	.8967	-.0438				
.10	.4723	.1258	.6572	.0955	.7933	.0793			.8856	.0644	.9690	.0055		
.15	.4626	.1080	.6059	.0949	.7233	.1061			.8013	.0900			.4944	.0171
.20	.4256	.1045	.5493	.1056	.6574	.1140	.7112	.0765	.7441	.1050	.7663	.0877	.5522	.1539
.25					.5917	.1043	.6480	.1122	.6951	.1079	.7150	.0950	.4638	.1380
.30	.1022	-.0724							.6258	.1050	.6413	.0963	.4150	.1130
.40	.1412	.0528	.0702	-.1634	.0776	-.2078	.0722	-.1947	.0532	-.1918	.5127	.0976	.3432	.1080
.50			.1144	-.1633	.1021	-.2136	.1010	-.2152			.0036	-.2192		
.60					.1227	-.2108	.1245	-.2232			-.0147	-.2454	-.3051	-.3397
.70	.1519	-.0600	.1691	-.0933	.1235	-.2141	.0737	-.2712	-.1904	-.3786	-.2457	-.3715	-.2761	-.3622
.80	-.2768	-.2425	-.1684	-.3185			-.1818	-.3367	-.2067	-.3385	-.2561	-.3473	-.2551	-.4404
.90	-.2555	-.2829	-.1814	-.3246	-.1487	-.3233	-.1901	-.3311	-.2144	-.3354	-.2580	-.3431	-.2039	-.4160
.95	-.2242	-.2929	-.1860	-.3033			-.1928	-.3194	-.2239	-.3286	-.2639	-.3348	-.2139	-.3966

TAIL 1

	Cp at y/b of													
	0.02		0.22		0.44		0.56		0.67		0.83		0.98	
x/c	U.S.	L.S.	U.S.	L.S.	U.S.	L.S.	U.S.	L.S.	U.S.	L.S.	U.S.	L.S.	U.S.	L.S.
.05	.1987	.0794	.6000	-.0264			.7814	-.0868					.5523	-.2115
.10	.1765	.0693					.7018	-.0061	.7295	-.0624			.4980	-.1507
.15					.5814	.0537	.6512	.0328	.6852	.0223	.7361	-.0849		
.20	.2357	.0968					.5936	.0543	.6361	.0453			.4957	-.0654
.25	.1786	.0240	.0673	.0425	.4921	.0741	.5375	.0697	.5778	.0547	.6220	.0072	.4432	-.0463
.30			.0012	-.1789			.4655	.0555	.5250	.0515	.5747	.0178	.3820	-.0141
.40	.2994	-.0613							-.0182	-.2075	.4276	.0058	.2986	.0113
.50					.1884	-.1416	.1092	-.2034	.0543	-.2251	-.0309	-.2387	.1500	-.0382
.60	.3010	-.0532	.3070	-.0274			.2347	-.1458	.1116	-.2258	-.0751	-.2891	-.3484	-.2679
.70					.2812	-.0399	.0457	-.2237	-.0983	-.3127	-.2418	-.2747	-.3195	-.2752
.80	-.0144	-.2064	-.1037	-.2826	-.0680	-.2733	-.0911	-.2842			-.2320	-.2752		
.90	.1187	-.2434	-.0640	-.2238	-.1117	-.2702	-.0945	-.2862	-.0970	-.2623	-.2141	-.2554	-.2690	-.2489
.95			.0167	-.1199	-.1232	-.1827	-.1002	-.2193	-.1186	-.2367	-.2058	-.2470	-.2602	-.2405

TAIL 2

TABLE XIX. - CONTINUED

(h) α = 10.75°

	Cp at y/b of													
	0.02		0.22		0.44		0.56		0.67		0.83		0.98	
x/c	U.S.	L.S.	U.S.	L.S.	U.S.	L.S.	U.S.	L.S.	U.S.	L.S.	U.S.	L.S.	U.S.	L.S.
.05	.4299	.1199	.7097	.1578	.7390	.0782	.8365	.0790	.8476	.0513				
.10	.4317	.1552	.6077	.1731	.7447	.1805			.8477	.1582	.8409	.0937		
.15	.4112	.1429	.5540	.1649	.6804	.1941			.7656	.1807			.4715	.1266
.20	.3782	.1431	.5020	.1686	.6233	.1947	.6811	.1849	.7114	.1907	.7327	.1644	.5166	.2116
.25					.5657	.1748	.6243	.1959	.6669	.1897	.6812	.1736	.4331	.1961
.30	.0670	-.0307							.6025	.1853	.6103	.1748	.3931	.1765
.40	.0734	.1058	.0217	-.1231	.0538	-.1699	.0563	-.1551	.0431	-.1487	.4898	.1618	.3407	.1681
.50			.0424	-.1350	.0625	-.1805	.0684	-.1774			-.0114	-.1826		
.60					.0673	-.1812	.0802	-.1797			-.0382	-.2099	-.2827	-.3109
.70	.1077	-.0193	.1113	-.0580	.0563	-.1869	.0265	-.2427	-.2213	-.3644	-.2644	-.3601	-.2614	-.3262
.80	-.2879	-.2177	-.1937	-.2915			-.2221	-.3188	-.2398	-.3208	-.2735	-.3296	-.1789	-.4264
.90	-.2705	-.2593	-.2076	-.3018	-.2064	-.3040	-.2357	-.3128	-.2474	-.3164	-.2691	-.3229	-.2086	-.4061
.95	-.2420	-.2672	-.2040	-.2956			-.2423	-.3026	-.2562	-.3116	-.2709	-.3155	-.2175	-.3866

TAIL 1

	Cp at y/b of													
	0.02		0.22		0.44		0.56		0.67		0.83		0.98	
x/c	U.S.	L.S.	U.S.	L.S.	U.S.	L.S.	U.S.	L.S.	U.S.	L.S.	U.S.	L.S.	U.S.	L.S.
.05	.1886	.1007	.5258	.0387			.6724	-.0055					.5023	-.1313
.10	.1976	.0884					.5926	.0763	.6328	.0285			.4517	-.0679
.15					.4786	.1342	.5491	.1281	.5925	.1190	.6347	-.0029		
.20	.2367	.1035					.4998	.1628	.5497	.1412			.4547	-.0040
.25	.1954	.0183	.0173	.0632	.4004	.1261	.4543	.1463	.4996	.1339	.5575	.1214	.4054	.0406
.30			-.0066	-.1658			.3935	.1086	.4523	.1134	.5188	.1402	.3473	.0877
.40	.2834	-.0609							-.0537	-.1872	.3897	.1022	.2661	.0864
.50					.1728	-.0857	.0498	-.1469	-.0015	-.1993	-.0560	-.1950	.1258	-.0067
.60	.2666	-.0649	.2612	-.0326			.2046	-.1067	.0527	-.1581	-.1100	-.2648	-.2962	-.3209
.70					.2217	-.0379	.0013	-.2065	-.1216	-.3142	-.2723	-.3217	-.2974	-.3062
.80	.0065	-.2237	-.1328	-.2957	-.1280	-.2787	-.1347	-.2811			-.2524	-.3065		
.90	.1104	-.2540	-.0345	-.2458	-.1595	-.2716	-.1471	-.2800	-.1463	-.2705	-.2312	-.2770	-.2640	-.2726
.95			-.0160	-.1328	-.1657	-.2081	-.1528	-.2294	-.1647	-.2355	-.2194	-.2461	-.2396	-.2454

TAIL 2

TABLE XIX. - CONTINUED
(l) α = 12.75°

	Cp at y/b of													
	0.02		0.22		0.44		0.56		0.67		0.83		0.98	
x/c	U.S.	L.S.	U.S.	L.S.	U.S.	L.S.	U.S.	L.S.	U.S.	L.S.	U.S.	L.S.	U.S.	L.S.
.05	.3856	.1538	.6590	.2498	.6332	.1747	.7829	.1833	.7830	.1808				
.10	.4046	.1879	.5570	.2446	.7008	.2977			.7933	.2640	.7934	.1990		
.15	.3802	.1820	.5037	.2238	.6376	.2806			.7192	.2934			.4722	.2366
.20	.3335	.1854	.4514	.2163	.5849	.2689	.6412	.2653	.6685	.2900	[illegible]	.2533	.5027	.2756
.25					.5511	.2429	.5892	.2765	.6277	.2827	[illegible]	.2780	.4334	.2644
.30	.0355	.0113							.5636	.2553	.5353	.2794	.4062	.2493
.40	-.0051	.1817	-.0168	-.0977	.0288	-.1402	.0352	-.1250	.0233	-.1130	.4815	.2347	.3617	.2470
.50			-.0123	-.1066	.0271	-.1559	.0330	-.1518			[illegible]	[illegible]		
.60					.0239	-.1557	.0379	-.1579			-.2450	-.1753	-.2663	-.2784
.70	.0607	.0306	.0334	-.0233	.0063	-.1593	-.0133	-.2234	-.2377	-.2479	-.2713	-.3493	-.2215	-.2847
.80	-.3009	-.1885	-.2261	-.2502			-.2446	-.3097	-.2558	-.3097	-.2833	-.3227	-.1999	-.3863
.90	-.2855	-.2384	-.2494	-.2759	-.2511	-.2897	-.2561	-.3002	-.2627	-.3017	-.2763	-.3096	-.2240	-.3935
.95	-.2610	-.2427	-.2443	-.2777			-.2632	-.2888	-.2714	-.2363	-.2704	-.3060	-.2273	-.3797

TAIL 1

	Cp at y/b of													
	0.02		0.22		0.44		0.56		0.67		0.83		0.98	
x/c	U.S.	L.S.	U.S.	L.S.	U.S.	L.S.	U.S.	L.S.	U.S.	L.S.	U.S.	L.S.	U.S.	L.S.
.05	.1913	.1112	.4505	.1012			.5563	.0804					.4639	-.0173
.10	.2169	.0994					.4766	.1749	.5112	.2066			.4331	.0340
.15					.3701	.1797	.4296	.2085	.4775	.2175	.5226	.1753		
.20	.2230	.1001					.3882	.1836	.4425	.2122			.3975	.1982
.25	.1803	.0082	-.0314	.0698	.2981	.1514	.3475	.1608	.4023	.1936	.4621	.2203	.3524	.1761
.30			-.0266	-.1452			.2971	.1138	.3702	.1650	.4495	.2061	.2933	.1440
.40	.2623	-.0756							-.0834	-.1355	.3443	.1385	.2264	.0902
.50					.1024	-.0598	-.0093	-.1126	-.0521	-.1322	-.0828	-.1478	.0963	-.0174
.60	.2663	-.0823	.2267	-.0343			.1462	-.0470	.0025	-.1190	-.1457	-.2211	-.2840	-.3181
.70					.1824	-.0327	-.0459	-.1800	-.1507	-.2901	-.2994	-.3301	-.2851	-.3098
.80	-.0778	-.2394	-.1031	-.2981	-.1507	-.2718	-.1498	-.2696			-.2660	-.2920		
.90	.0675	-.2844	-.0969	-.2661	-.2030	-.2908	-.1785	-.2811	-.1573	-.2680	-.2533	-.2747	-.2683	-.2518
.95			-.0960	-.1641	-.1875	-.2318	-.1885	-.2520	-.1755	-.2493	-.2418	-.2497	-.2446	-.2389

TAIL 2

TABLE XIX. - CONTINUED

(j) α = 16.77°

	Cp at y/b of													
	0.02		0.22		0.44		0.56		0.67		0.83		0.98	
x/c	U.S.	L.S.	U.S.	L.S.	U.S.	L.S.	U.S.	L.S.	U.S.	L.S.	U.S.	L.S.	U.S.	L.S.
.05	.3553	.2328	.5667	.4176	.5926	.4358	.6273	.4351	.6190	.4554				
.10	.3640	.2661	.4647	.3842	.5996	.4921			.6854	.5021	.7126	.5282		
.15	.3166	.2617	.4152	.3476	.5271	.4309			.6196	.4827			.4808	.4652
.20	.2508	.2701	.3658	.3295	.4784	.4013	.5383	.4143	.5895	.4620	.6285	.4897	.4511	.4282
.25					.4278	.3727	.5036	.4048	.5664	.4426	.5884	.4890	.4066	.3934
.30	-.0315	.1121							.5239	.4211	.5265	.4358	.4113	.3702
.40	-.1380	.3376	-.0826	-.0205	-.0176	-.0833	.0094	-.0559	.0156	-.0424	.4423	.3533	.3695	.3503
.50			-.1008	-.0175	-.0276	-.0929	-.0026	-.0803			-.0235	-.0778		
.60					-.0311	-.0764	-.0067	-.0866			-.0699	-.1312	-.2395	-.2565
.70	-.0638	.1464	-.0781	.0750	-.0482	-.0709	-.0599	-.1583	-.2696	-.3186	-.2889	-.3254	-.1332	-.2020
.80	-.3358	-.1244	-.2982	-.1808			-.2789	-.2973	-.2833	-.2873	-.2977	-.2983	-.2083	-.2697
.90	-.3061	-.2356	-.3032	-.2131	-.2610	-.2445	-.2899	-.2697	-.2926	-.2726	-.2792	-.2839	-.2856	-.3859
.95	-.2636	-.2262	-.2799	-.2242			-.2676	-.2655	-.2783	-.2690	-.2728	-.2822	-.2912	-.3696

TAIL 1

	Cp at y/b of													
	0.02		0.22		0.44		0.56		0.67		0.83		0.98	
x/c	U.S.	L.S.	U.S.	L.S.	U.S.	L.S.	U.S.	L.S.	U.S.	L.S.	U.S.	L.S.	U.S.	L.S.
.05	.2309	.0809	.3163	.1462			.3118	.2648					.3781	.3994
.10	.2943	.0681					.2574	.2634	.2629	.2887			.3342	.3452
.15					.1916	.1939	.2175	.2482	.2452	.2839	.3919	.3098		
.20	.2957	.0674					.1818	.2548	.2145	.2958			.2218	.2357
.25	.1158	-.0160	-.0194	.0793	.1234	.2093	.1494	.2555	.1800	.2797	.2531	.3163	.1919	.1857
.30			.0659	-.1215			.1083	.1895	.1534	.2350	.2293	.2933	.1523	.1465
.40	.2510	-.1528							-.1889	-.1314	.1656	.1806	.1029	.0777
.50					.0713	-.0142	-.0203	-.0636	-.1320	-.1117	-.1746	-.1380	.0141	-.0637
.60	.2478	-.1417	.2339	-.0599			.0374	.0104	-.0956	-.0645	-.2369	-.2067	-.2831	-.2825
.70					.0105	-.0429	-.1494	-.1873	-.2284	-.2369	-.3036	-.3167	-.3043	-.3001
.80	-.1348	-.2574	-.0788	-.3166	-.1755	-.2844	-.2238	-.2786			-.3031	-.2923		
.90	.0714	-.3233	-.1126	-.3107	-.2120	-.3137	-.2127	-.2892	-.2279	-.2739	-.2842	-.2757	-.2871	-.2892
.95			-.1046	-.2605	-.2160	-.2784	-.2134	-.2599	-.2241	-.2519	-.2567	-.2535	-.2577	-.2559

TAIL 2

TABLE XIX. - CONCLUDED

(k) $\alpha = 18.76°$

	Cp at y/b of													
	0.02		0.22		0.44		0.56		0.67		0.83		0.98	
x/c	U.S.	L.S.	U.S.	L.S.	U.S.	L.S.	U.S.	L.S.	U.S.	L.S.	U.S.	L.S.	U.S.	L.S.
.05	.3394	.2663	.5186	.5074	.5332	.5268	.5286	.5773	.5429	.6344				
.10	.3507	.3038	.4278	.4490	.5391	.5540			.6337	.6228	.6494	.6495		
.15	.3001	.3050	.3722	.4085	.4868	.4986			.5740	.5822			.4652	.5437
.20	.2245	.3187	.3257	.3866	.4454	.4751	.5072	.5127	.5378	.5531	.5863	.5763	.4445	.4844
.25					.4055	.4379	.4719	.4907	.5150	.5251	.5515	.5476	.3930	.4413
.30	-.0584	.1875							.4800	.4942	.4928	.4874	.4165	.4123
.40	-.1873	.4207	-.1143	.0108	-.0344	-.0465	-.0087	-.0245	.0001	-.0146	.4175	.4056	.3697	.3847
.50			-.1293	.1263	-.0542	-.0432	-.0284	-.0495			-.0263	-.0576		
.60					-.0611	-.0139	-.0331	-.0506			-.0770	-.1151	-.2264	-.2457
.70	-.1155	.2053	-.1144	.1639	-.0746	-.0143	-.0882	-.1312	-.2829	-.3022	-.2953	-.3150	-.1436	-.1845
.80	-.3548	-.0862	-.3222	-.1316			-.2953	-.2613	-.3014	-.2619	-.3003	-.2804	-.2033	-.2353
.90	-.3029	-.2161	-.3341	-.1811	-.2989	-.2069	-.2706	-.2410	-.2641	-.2519	-.2745	-.2697	-.3335	-.3673
.95	-.2544	-.2166	-.3000	-.1975			-.2568	-.2378	-.2555	-.2503	-.2673	-.2685	-.3420	-.3665

TAIL 1

	Cp at y/b of													
	0.02		0.22		0.44		0.56		0.67		0.83		0.98	
x/c	U.S.	L.S.	U.S.	L.S.	U.S.	L.S.	U.S.	L.S.	U.S.	L.S.	U.S.	L.S.	U.S.	L.S.
.05	.2420	.0586	.2571	.1369			.2084	.2865					.1509	.4526
.10	.3091	.0472					.1692	.2642	.1568	.3126			.2114	.3542
.15					.1310	.2023	.1342	.2682	.1420	.3210	.2518	.3583		
.20	.2737	.0440					.1000	.2646	.1157	.3020			.1343	.2305
.25	.0719	-.0455	.0219	.0815	.0660	.2011	.0694	.2410	.0847	.2672	.1440	.3021	.1064	.1811
.30			.0735	-.1036			.0280	.1662	.0591	.2172	.1237	.2666	.0756	.1374
.40	.2250	-.1899							-.2132	-.1404	.0676	.1489	.0312	.0664
.50					.0247	-.0285	-.0565	-.0488	-.1725	-.1058	-.2256	-.1500	-.0467	-.0786
.60	.2311	-.1563	.2411	-.0799			-.0079	-.0016	-.0893	-.0354	-.2783	-.2069	-.3212	-.3293
.70					-.0492	-.0581	-.2170	-.1993	-.2655	-.2408	-.3278	-.3114	-.3404	-.3247
.80	-.1240	-.2871	-.0892	-.3288	-.2171	-.2962	-.2486	-.2850			-.3190	-.2910		
.90	.0553	-.3393	-.1178	-.3350	-.2485	-.3270	-.2640	-.2982	-.2586	-.2826	-.2961	-.2743	-.2915	-.3007
.95			-.1142	-.2981	-.2551	-.2982	-.2706	-.2918	-.2533	-.2721	-.2748	-.2481	-.2703	-.2727

TAIL 2

REPRODUCIBILITY OF THE
ORIGINAL PAGE IS POOR

TABLE XX. - PRESSURE COEFFICIENTS, ϕ = 45°, δ = -15°, M = 2.36

(a) α = -4.05°

	Cp at y/b of													
	0.02		0.22		0.44		0.56		0.67		0.83		0.98	
x/c	U.S.	L.S.	U.S.	L.S.	U.S.	L.S.	U.S.	L.S.	U.S.	L.S.	U.S.	L.S.	U.S.	L.S.
.05			.9000	-.0548	.9951	-.0764	.9960	-.0957						
.10	.1957	-.0335	.7932	-.0927	.9909	-.0693			.9533	-.0663			[illegible]	[illegible]
.15	.2167	-.0125	.7331	-.0970	.9320	-.0654			.9952	-.0650			[illegible]	[illegible]
.20	.2224	-.0151	.5952	-.0967	.7903	-.0735	.7866	-.0521	.9647	-.0702	.9718	-.0605	[illegible]	[illegible]
.25	.1157	-.0966			.7380	-.0771	.7675	-.0745	.9034	-.0736	.8432	-.0542	[illegible]	[illegible]
.30	.1456	-.0813							.7534	-.0770	.7918	-.0635	[illegible]	[illegible]
.40	.2497	-.1046	.2608	-.1609	.3065	-.1545	.2904	-.1616	.3810	-.1629	.5905	-.0773	[illegible]	[illegible]
.50			.3535	-.1519	.3353	-.1772	.3400	-.1773			.2755	-.1536	[illegible]	[illegible]
.60					.3254	-.1787	.3507	-.1393	.3489	-.1775	.2835	-.1733	-.0505	-.1958
.70	.1925	-.1335	.3491	-.1419	.3141	-.1777	.3024	-.1723	.3919	-.1702	.0654	-.1735	-.0613	-.1979
.80	-.0396	-.1856	.0527	-.1827			.0524	-.1703	.0653	-.1691	.0550	-.1732	-.0523	-.1946
.90	-.0832	-.1937	.0116	-.1767	.0471	-.1733	.0395	-.1708	.0583	-.1704	.0489	-.1733		
.95	-.0877	-.1893	.0003	-.1757			.0335	-.1705	.0498	-.1703	.0394	-.1732	-.0501	-.1705

TAIL 1

	Cp at y/b of													
	0.02		0.22		0.44		0.56		0.67		0.83		0.98	
x/c	U.S.	L.S.	U.S.	L.S.	U.S.	L.S.	U.S.	L.S.	U.S.	L.S.	U.S.	L.S.	U.S.	L.S.
.05	.7108	-.0777	1.0730	-.0786			1.1539	-.0914			1.2267	-.1529	1.1257	-.1049
[illegible]	.5971	-.0483					1.0547	-.0759	1.0540	-.0690			.9833	[illegible]
[illegible]					.9536	-.0714	.9904	-.0751	1.0206	-.0692			[illegible]	[illegible]
[illegible]	.6813	-.0772					.9272	-.0771	.9645	-.0712			.9232	-.0395
[illegible]	[illegible]	[illegible]	.3966	-.1043	.8300	-.0854	.9701	-.0803	.9032	-.0739	.9448	-.0538	[illegible]	[illegible]
[illegible]			.3144	-.1778			.7948	-.0898	.9462	-.0796	.9117	-.0635	[illegible]	[illegible]
[illegible]									.2917	-.1650	.7517	-.0826	[illegible]	[illegible]
[illegible]					.3690	-.1653	.3682	-.1706	.3529	-.1764	.2766	-.1680	[illegible]	[illegible]
[illegible]	[illegible]	[illegible]	.3680	-.1568			.3944	-.1716	.3815	-.1653	.2320	-.1515	[illegible]	[illegible]
[illegible]					.3448	-.1532	.1974	-.1635	.0953	-.1530	.0555	-.1500	[illegible]	[illegible]
[illegible]	[illegible]	-.0651	.1568	-.1836	.0825	-.1706	.0806	-.1647			.0454	-.1514		
[illegible]	[illegible]	[illegible]	.1752	-.1327	.0581	-.1620	.0645	-.1633	.0611	-.1573	.0341	-.1522	[illegible]	[illegible]
[illegible]			.1812	-.0979	.0624	-.1500	.0574	-.1545	.0529	-.1556	.0236	-.1515	[illegible]	[illegible]

TAIL 2

TABLE XX - CONTINUED
(b) α = -2.05°

	Cp at y/b of													
	0.02		0.22		0.44		0.56		0.67		0.83		0.98	
x/c	U.S.	L.S.	U.S.	L.S.	U.S.	L.S.	U.S.	L.S.	U.S.	L.S.	U.S.	L.S.	U.S.	L.S.
.05			.3577	-.1[illegible]	.33[illegible]	-.[illegible]	.347[illegible]	-.0437						
.10	.2829	-.[illegible]	.7491	-.0552	.8513	-.0432			.9172	-.0372			[illegible]	[illegible]
.15	.28[illegible]	-.[illegible]48	.6875	-.0552	.795[illegible]	-.[illegible]			.8517	-.[illegible]			[illegible]	[illegible]
.20	[illegible]	-.[illegible]	.5403	-.0537	[illegible]	[illegible]	[illegible]	[illegible]	.9116	-.0[illegible]	[illegible]	-.0355	[illegible]	[illegible]
.25	.1252	-.0853			.7147	-.0645	[illegible]	-.0513	[illegible]	-.0561	.8231	[illegible]	[illegible]	[illegible]
.30	.1372	-.0822							.7444	-.0532	[illegible]	-.0473	[illegible]	[illegible]
.40	.2333	-.[illegible]	.2323	-.1552	.2756	-.1543	.2755	-.1506	[illegible]	[illegible]	.551[illegible]	-.0561	[illegible]	[illegible]
.50			.2151	-.1553	.2933	-.1668	.3052	-.1668			[illegible]	[illegible]	[illegible]	[illegible]
.60					.2957	-.1686	.31[illegible]	-.1558	.3150	-.1679	.2654	-.1709	-.1552	-.18[illegible]
.70	.1735	-.1244	.2781	-.1386	.2855	-.1700	.2744	-.1662	.0647	-.1545	.0429	-.1672	[illegible]	[illegible]
.80	-.0475	-.1603	.0374	-.1873			.0344	-.1527	.0392	-.1635	.0312	-.1670	-.[illegible]	-.191[illegible]
.90	-.0922	-.1915	.0064	-.1757	.0111	-.1652	.0233	-.1629	.0383	-.1638	.0231	-.1673		
.95	-.0831	-.1852	-.0061	-.1724			.0152	-.1629	.0306	-.1637	.0130	-.1673	-.0683	[illegible]

TAIL 1

	Cp at y/b of													
	0.02		0.22		0.44		0.56		0.67		0.83		0.98	
x/c	U.S.	L.S.	U.S.	L.S.	U.S.	L.S.	U.S.	L.S.	U.S.	L.S.	U.S.	L.S.	U.S.	L.S.
.05	.5134	-.0396	.9899	-.0556			1.0745	-.0670			1.1595	-.1434	1.0871	-.08[illegible]
.10	.4504	-.0247					.985[illegible]	-.0563	.9846	-.0568			.9518	-.0443
.15					.8948	-.0547	.9233	-.0574	.9553	-.0522			.8607	-.0305
.20	.5135	-.0449					.9703	-.0609	.9064	-.0560			.7965	-.0241
.25	.2359	-.1245	.3682	-.0658	.7621	-.0632	.8212	-.0646	.8521	-.0597	.9028	-.0431	.7454	-.0134
.30			.2772	-.1572			.7544	-.0745	.8001	-.0646	.8698	-.0535	.6844	-.0077
.40									.2718	-.1572	.7301	-.0675	.5978	-.0156
.50					.3223	-.1583	.3206	-.1632	.3129	-.1694	.2629	-.1598	.4444	-.0409
.60	.3772	.0097	.3039	-.1575			.3426	-.1712	.3333	-.1673	.2096	-.1542	-.0559	-.1608
.70					.2951	-.1557	.1630	-.1643	.0674	-.1570	.0354	-.1493	-.0706	-.1620
.80	.1014	-.0692	.1074	-.1674	.0450	-.1695	.0489	-.1641			.0235	-.1497		
.90	.0633	-.1177	.1278	-.1350	.0293	-.1645	.0327	-.1641	.0367	-.1572	.0126	-.1509	-.0653	-.1615
.95			.1280	-.0988	.0270	-.1510	.0254	-.1568	.0295	-.1572	.0019	-.1514	-.0777	-.1720

TAIL 2

TABLE XX. - CONTINUED

(c) α = -0.05°

	Cp at y/b of													
	0.02		0.22		0.44		0.56		0.67		0.83		0.98	
x/c	U.S.	L.S.	U.S.	L.S.	U.S.	L.S.	U.S.	L.S.	U.S.	L.S.	U.S.	L.S.	U.S.	L.S.
.05			.7953	[illegible]	.8894	[illegible]	.8790	[illegible]						
.10	.3034	[illegible]	[illegible]	[illegible]	[illegible]	[illegible]			[illegible]	[illegible]			[illegible]	[illegible]
.15	.3249	[illegible]	.6525	[illegible]	[illegible]	[illegible]			[illegible]	[illegible]			[illegible]	[illegible]
.20	.3336	[illegible]	[illegible]	[illegible]	[illegible]	[illegible]	.7464	[illegible]	.7773	[illegible]	[illegible]	[illegible]	.7055	[illegible]
.25	[illegible]	[illegible]			[illegible]	[illegible]	.7177	[illegible]	[illegible]	[illegible]	[illegible]	-.0165	[illegible]	[illegible]
.30	.1364	-.0953							[illegible]	[illegible]	[illegible]	-.0245	[illegible]	[illegible]
.40	.2006	-.0854	.2030	[illegible]	[illegible]	-.1433	.2522	[illegible]	[illegible]	-.1370	[illegible]	-.0339	[illegible]	[illegible]
.50			.1907	[illegible]	[illegible]	[illegible]	[illegible]	[illegible]			.2825	[illegible]	[illegible]	.0000
.60					.2585	-.1565	.2901	-.1562	.2549	-.1551	.2437	-.1603	[illegible]	-.1735
.70	.1648	-.1161	.2204	[illegible]	.2382	-.1605	.2309	[illegible]	.0444	-.1562	.0219	-.1583	[illegible]	[illegible]
.80	.0533	-.1580	.0114	[illegible]			.0176	-.1539	.0179	-.1554	.0076	-.1591	-.0920	-.1839
.90	-.0978	-.1829	-.0130	-.1685	-.0103	-.1554	.0050	[illegible]	.0172	-.1551	-.0009	-.1600		
.95	-.0873	-.1825	-.0220	-.1625			-.0022	-.1539	.0109	-.1550	-.0105	-.1607	-.0831	-.1754

TAIL 1

	Cp at y/b of													
	0.02		0.22		0.44		0.56		0.67		0.83		0.98	
x/c	U.S.	L.S.	U.S.	L.S.	U.S.	L.S.	U.S.	L.S.	U.S.	L.S.	U.S.	L.S.	U.S.	L.S.
.05	.3657	-.0027	.8929	-.0299			.9891	-.0443			1.0769	-.1311	1.0233	-.0521
.10	.3370	-.0008					.9035	-.0371	.9010	-.0385			[illegible]	[illegible]
.15					.8099	-.0355	.8531	-.0394	.8692	-.0336			[illegible]	-.0092
.20	.3751	-.0234					.8064	-.0431	.8438	-.0390			.7564	-.0068
.25	.1496	-.0992	.3319	-.0638	.7293	-.0491	.7663	-.0463	.7595	-.0426	.8523	-.0270	.7143	-.0029
.30			.2364	-.1537			.7101	-.0563	.7554	-.0472	.8221	-.0372	.6552	.0017
.40									.2524	-.1474	.6936	-.0521	.5762	-.0041
.50					.2768	-.1513	.2796	-.1541	.2776	-.1600	.2467	-.1510	.4255	-.0343
.60	.3462	.0018	.2514	-.1378			.2943	-.1634	.2911	-.1613	.1881	-.1554	-.0631	-.1469
.70					.2544	-.1499	.1257	-.1624	.0391	-.1537	.0164	-.1479	-.0813	[illegible]
.80	.0473	-.0796	.2843	-.1537	.0160	-.1655	.0215	-.1604			.0032	-.1490		
.90	[illegible]	-.1165	.0952	-.1365	.0029	-.1622	.0055	-.1615	.0113	-.1547	-.0075	-.1505	-.0915	[illegible]
.95			.0979	-.1097	.0015	-.1471	-.0013	-.1523	.0041	-.1562	-.0179	-.1513	[illegible]	[illegible]

TAIL 2

TABLE XX. - CONTINUED
[illegible]

	Cp at y/b of													
	0.02		0.22		0.44		0.56		0.67		0.83		0.98	
x/c	U.S.	L.S.	U.S.	L.S.	U.S.	L.S.	U.S.	L.S.	U.S.	L.S.	U.S.	L.S.	U.S.	L.S.
.05			.7060	.0336	.7707	.0129	.7746	.0146						
.10	[illegible]	.0182	.6597	-.0087	[illegible]	[illegible]			[illegible]	[illegible]			[illegible]	[illegible]
.15	[illegible]	[illegible]	.6096	[illegible]	[illegible]	[illegible]			[illegible]	[illegible]			[illegible]	[illegible]
.20	[illegible]	[illegible]	.5694	[illegible]	.6718	[illegible]	.5961	[illegible]	[illegible]	[illegible]	[illegible]	[illegible]	[illegible]	[illegible]
.25	[illegible]	[illegible]			[illegible]	[illegible]	[illegible]	[illegible]	[illegible]	[illegible]	[illegible]	[illegible]	[illegible]	[illegible]
.30	[illegible]	-.0869							[illegible]	[illegible]	[illegible]	[illegible]	[illegible]	[illegible]
.40	[illegible]	-.0706	.1844	[illegible]	.2232	-.1303	.2448	-.1257	[illegible]	[illegible]	[illegible]	[illegible]	[illegible]	[illegible]
.50			[illegible]	-.1344	[illegible]	[illegible]	[illegible]	[illegible]			[illegible]	[illegible]	[illegible]	[illegible]
.60					.2302	[illegible]	[illegible]	-.1490	.2542	[illegible]	[illegible]	[illegible]	[illegible]	[illegible]
.70	.1394	-.1051	.1710	-.1241	.2251	-.1502	.1936	-.1567	[illegible]	[illegible]	[illegible]	-.1533	[illegible]	[illegible]
.80	[illegible]	-.1540	-.0132	-.1664			-.0019	-.1492	[illegible]	-.1502	[illegible]	[illegible]	[illegible]	[illegible]
.90	[illegible]	-.1575	-.0336	-.1595	-.0267	-.1487	-.0129	-.1489	-.0040	[illegible]	-.0230	-.1550		
.95	[illegible]	-.1785	-.0392	-.1576			-.0205	-.1490	-.0099	[illegible]	[illegible]	-.1553	[illegible]	[illegible]

TAIL 1

	Cp at y/b of													
	0.02		0.22		0.44		0.56		0.67		0.83		0.98	
x/c	U.S.	L.S.	U.S.	L.S.	U.S.	L.S.	U.S.	L.S.	U.S.	L.S.	U.S.	L.S.	U.S.	L.S.
.05	.2704	.0169	.7931	.0003			.9025	-.0208			.9699	-.1159	.9722	-.0230
.10	.2542	.0134					.8258	-.0157	.8138	-.0177			.9509	.0015
.15					.7353	-.0131	.7799	-.0185	.8123	-.0152			.7646	.0107
.20	.2742	-.0076					.7356	-.0225	.7798	-.0207			.7112	.0110
.25	.0893	-.0837	.2867	-.0396	.6627	-.0251	.7077	-.0261	.7371	-.0235	.7943	-.0115	.6674	.0087
.30			.1877	-.1390			.6532	-.0359	.7025	-.0280	.7595	-.0202	.6159	.0063
.40									.2296	-.1367	.6584	-.0332	.5436	-.0026
.50					.2330	-.1429	.2401	-.1423	.2425	-.1435	.2275	-.1402	.4040	-.0287
.60	.3108	-.0085	.2478	-.1199			.2493	-.1525	.2486	-.1522	.1673	-.1550	-.0697	-.1416
.70					.2114	-.1430	.0980	-.1572	.0107	-.1470	-.0004	-.1435	-.0911	-.1416
.80	.0009	-.0940	.0688	-.1659	-.0120	-.1554	-.0038	-.1534			-.0149	-.1446		
.90	-.0251	-.1152	.0452	-.1401	-.0183	-.1571	-.0192	-.1552	-.0127	-.1479	-.0259	-.1468	-.0928	-.1414
.95			.0312	-.1198	-.0139	-.1426	-.0260	-.1551	-.0195	-.1498	-.0358	-.1472	-.1065	-.1515

TAIL 2

TABLE XX. - CONTINUED

(e) α = 3.95°

	Cp at y/b of													
	0.02		0.22		0.44		0.56		0.67		0.83		0.98	
x/c	U.S.	L.S.	U.S.	L.S.	U.S.	L.S.	U.S.	L.S.	U.S.	L.S.	U.S.	L.S.	U.S.	L.S.
.05			.6333	.0630	.6557	.0412	.6400	.0443						
.10	.3705	.0309	.6905	.0212	.6839	.0380			.7132	.0412			.5613	.0260
.15	.3539	.0290	.5498	.0233	.6519	.0350			.6900	.0356			.5244	.0354
.20	.3540	.0217	.5163	.0231	.6135	.0305	.6481	.0265	.6758	.0311	.7012	.0400	.5907	.0375
.25	.1172	-.0911			.5924	.0270	.6308	.0294	.6649	.0235	.6925	.0375	.5433	.0407
.30	.1152	-.0781							.6441	.0257	.6719	.0300	.5039	.0404
.40	.1282	-.0521	.1320	-.1260	.1990	-.1151	.2255	-.1106	.2435	-.1071	.6251	.0190	.4651	.0333
.50			.1419	-.1230	.1979	-.1272	.2222	-.1271			.2509	-.1131	.4123	.0258
.60					.1957	-.1317	.2239	-.1383	.2248	-.1300	.2042	-.1380	-.0623	-.1625
.70	.0992	-.0904	.1288	-.1123	.1907	-.1367	.1641	-.1503	.0075	-.1462	-.0150	-.1481	-.0843	-.1576
.80	-.0727	-.1448	-.0409	-.1572			-.0223	-.1436	-.0234	-.1449	-.0343	-.1431	-.0714	-.1578
.90	-.1108	-.1537	-.0586	-.1523	-.0437	-.1428	-.0337	-.1432	-.0255	-.1445	-.0439	-.1484		
.95	-.1054	-.1684	-.0616	-.1521			-.0404	-.1431	-.0313	-.1444	-.0529	-.1486	-.0774	-.1570

TAIL 1

	Cp at y/b of													
	0.02		0.22		0.44		0.56		0.67		0.83		0.98	
x/c	U.S.	L.S.	U.S.	L.S.	U.S.	L.S.	U.S.	L.S.	U.S.	L.S.	U.S.	L.S.	U.S.	L.S.
.05	.1962	.0283	.6974	.0337			.8076	.0046			.8454	-.1017	.8971	.0053
.10	.1716	.0179					.7440	.0103	.7403	.0052			.7819	.0231
.15					.6614	.0150	.7011	.0070	.7323	.0071			.7071	.0303
.20	.1790	.0016					.6638	.0034	.7077	.0017			.6543	.0273
.25	.0333	-.0734	.2141	-.0167	.5887	.0036	.6369	.0008	.6714	-.0002	.7119	.0060	.6179	.0177
.30			.1121	-.1232			.5983	-.0099	.6405	-.0047	.6954	-.0021	.5695	.0084
.40									.2050	-.1232	.6033	-.0113	.5054	-.0017
.50					.1795	-.1291	.1962	-.1277	.2059	-.1359	.2036	-.1288	.3817	-.0236
.60	.2461	-.0180	.2177	-.1088			.2000	-.1382	.2085	-.1394	.1397	-.1520	-.0761	-.1365
.70					.1518	-.1332	.0600	-.1550	-.0123	-.1417	-.0190	-.1391	-.1006	-.1356
.80	-.0434	-.0934	.0235	-.1648	-.0497	-.1507	-.0368	-.1470			-.0336	-.1396		
.90	.0339	-.1289	-.0132	-.1385	-.0494	-.1532	-.0519	-.1484	-.0411	-.1409	-.0442	-.1414	-.1044	-.1434
.95			-.0245	-.1132	-.0464	-.1463	-.0530	-.1487	-.0479	-.1428	-.0543	-.1415	-.1128	-.1556

TAIL 2

TABLE XV - CONTINUED

(f) $\alpha = 5.00°$

	Cp at y/b of													
	0.02		0.22		0.44		0.56		0.67		0.83		0.98	
x/c	U.S.	L.S.	U.S.	L.S.	U.S.	L.S.	U.S.	L.S.	U.S.	L.S.	U.S.	L.S.	U.S.	L.S.
.05			.5676	.0937	.5399	.0719	.5297	.0766						
.10	.3404	.0471	.5323	.0555	.6076	.0704			.6083	.0731			.5483	.0512
.15	.3322	.0502	.4935	.0570	.5907	.0668			.5872	.0672			.5227	.0522
.20	.3229	.0452	.4575	.0563	.5577	.0632	.5897	.0503	.6034	.0630	.6070	.0700	.4929	.0536
.25	.0955	-.0660			.5475	.0533	.5800	.0620	.6043	.0605	.6039	.0673	.4638	.0559
.30	.0875	-.0580							.5885	.0575	.6014	.0600	.4336	.0585
.40	.0946	-.0535	.1175	-.1095	.1733	-.0955	.2004	-.0921	.2219	-.0979	.5743	.0482	.4155	.0434
.50			.1079	-.1067	.1646	-.1079	.1901	-.1093			.2315	-.0947	.3755	.0409
.60					.1619	-.1123	.1903	-.1217	.1945	-.1121	.1827	-.1215	-.0685	-.1513
.70	.0545	-.0719	.0907	-.0953	.1558	-.1171	.1333	-.1374	-.0103	-.1393	-.0305	-.1400	-.0716	-.1539
.80	-.1024	-.1298	-.0595	-.1492			-.0429	-.1356	-.0429	-.1362	-.0511	-.1399	-.0717	-.1661
.90	-.1159	-.1376	-.0865	-.1430	-.0637	-.1343	-.0536	-.1351	-.0456	-.1361	-.0613	-.1406		
.95	-.1151	-.1453	-.0893	-.1436			-.0599	-.1353	-.0514	-.1361	-.0703	-.1409	-.0618	-.1480

TAIL 1

	Cp at y/b of													
	0.02		0.22		0.44		0.56		0.67		0.83		0.98	
x/c	U.S.	L.S.	U.S.	L.S.	U.S.	L.S.	U.S.	L.S.	U.S.	L.S.	U.S.	L.S.	U.S.	L.S.
.05	.1383	.0343	.5735	.0616			.6911	.0337			.7331	-.0838	.8113	.0343
.10	.1341	.0197					.6541	.0405	.6544	.0313			.7075	.0457
.15					.5673	.0481	.6145	.0371	.6461	.0328			.6384	.0484
.20	.1511	.0062					.5783	.0347	.6229	.0293			.5917	.0385
.25	.0485	-.0676	.1333	.0061	.4989	.0341	.5547	.0328	.5959	.0278	.6346	.0280	.5619	.0228
.30			.0350	-.1094			.5248	.0210	.5697	.0235	.6222	.0237	.5209	.0118
.40									.1743	-.1054	.5563	.0117	.4648	.0061
.50					.1196	-.1144	.1489	-.1105	.1646	-.1185	.1765	-.1134	.3555	-.0212
.60	.1945	-.0271	.1415	-.0957			.1476	-.1212	.1632	-.1219	.1110	-.1431	-.0819	-.1292
.70					.0892	-.1209	.0191	-.1495	-.0379	-.1324	-.0395	-.1315	-.1067	-.1291
.80	-.0417	-.1039	-.0008	-.1588	-.0822	-.1445	-.0686	-.1376			-.0540	-.1312		
.90	.0806	-.1333	-.0291	-.1362	-.0768	-.1464	-.0830	-.1389	-.0698	-.1306	-.0635	-.1321	-.1121	-.1268
.95			-.0316	-.1117	-.0736	-.1462	-.0894	-.1397	-.0755	-.1321	-.0730	-.1319	-.1257	-.1409

TAIL 2

TABLE XX. - CONTINUED

(g) α = 7.75°

	Cp at y/b of													
	0.02		0.22		0.44		0.56		0.67		0.83		0.98	
x/c	U.S.	L.S.	U.S.	L.S.	U.S.	L.S.	U.S.	L.S.	U.S.	L.S.	U.S.	L.S.	U.S.	L.S.
.05			.5071	.1263	.4515	.1061	.4558	.1113						
.10	.3051	.0631	.4857	.0940	.5299	.1085			.5319	.1073			[illegible]	[illegible]
.15	.3052	.0896	.4467	.0951	.5246	.1027			.5139	.1006			[illegible]	.0762
.20	.2860	.0702	.4127	.0956	.5102	.0994	.5261	.0860	.5133	.0970	.5228	.1031	[illegible]	[illegible]
.25	.0762	-.0632			.4983	.0961	.5189	.0969	.5200	.0944	.5263	.1004	.3951	.0755
.30	.0530	-.0583							.5209	.0912	.5225	.0924	.3712	.0755
.40	.0712	-.0410	.0862	-.0978	.1518	-.0785	.1745	-.0758	.1908	-.0713	.5017	.0800	.3597	.0576
.50			.0739	-.0945	.1338	-.0916	.1621	-.0923			.1925	-.0784	.3305	.0564
.60					.1289	-.0953	.1606	-.1066	.1641	-.0978	.1489	-.1091	-.0793	-.1463
.70	.0112	-.0566	.0598	-.0804	.1210	-.1014	.1054	-.1271	-.0278	-.1387	-.0502	-.1372	-.0772	-.1500
.80	-.1256	-.1175	-.0895	-.1483			-.0624	-.1322	-.0589	-.1330	-.0634	-.1370	-.0755	-.1776
.90	-.1254	-.1429	-.1092	-.1400	-.0809	-.1308	-.0723	-.1318	-.0628	-.1327	-.0785	-.1379		
.95	-.1255	-.1298	-.1129	-.1397			-.0776	-.1318	-.0687	-.1327	-.0864	-.1383	-.0530	-.1551

TAIL 1

	Cp at y/b of													
	0.02		0.22		0.44		0.56		0.67		0.83		0.98	
x/c	U.S.	L.S.	U.S.	L.S.	U.S.	L.S.	U.S.	L.S.	U.S.	L.S.	U.S.	L.S.	U.S.	L.S.
.05	.1404	.0405	.4648	.0758			.5443	.0673			.5759	-.0628	.6699	.0642
.10	.1779	.0226					.5523	.0742	.5573	.0611			.6159	.0701
.15					.4668	.0786	.5173	.0708	.5505	.0666			.5643	.0639
.20	.1801	.0040					.4867	.0694	.5311	.0638			.5274	.0436
.25	.0941	-.0689	.0826	.0195	.4039	.0647	.4655	.0669	.5088	.0626	.5505	.0556	.4997	.0243
.30			-.0092	-.0985			.4406	.0527	.4897	.0577	.5422	.0523	.4648	.0166
.40									.1379	-.0834	.4886	.0414	.4154	.0165
.50					.0535	-.1013	.0965	-.0942	.1208	-.0979	.1449	-.0945	.3252	-.0118
.60	.1511	-.0354	.0879	-.0899			.0886	-.1059	.1143	-.1023	.0797	-.1308	-.0929	-.1295
.70					.0328	-.1091	-.0234	-.1484	-.0687	-.1302	-.0626	-.1304	-.1182	-.1277
.80	-.0144	-.1069	-.0485	-.1546	-.0875	-.1397	-.1048	-.1337			-.0772	-.1298		
.90	.0566	-.1338	-.0360	-.1356	-.0848	-.1395	-.1157	-.1338	-.1001	-.1266	-.0865	-.1303	-.1174	-.1090
.95			-.0310	-.1139	-.0833	-.1384	-.1163	-.1341	-.1075	-.1274	-.0954	-.1306	-.1231	-.1355

TAIL 2

TABLE XX. - CONTINUED
(h) α = 3.35°

	Cp at y/b of													
	0.02		0.22		0.44		0.56		0.67		0.83		0.98	
x/c	U.S.	L.S.	U.S.	L.S.	U.S.	L.S.	U.S.	L.S.	U.S.	L.S.	U.S.	L.S.	U.S.	L.S.
[illegible]			.4587	.1534	.3912	.1451	.4081	.1519						
[illegible]	.2791	.0861	.4425	.1343	.4685	.1475			.4718	.1452			.4045	.1043
[illegible]	.2813	.1000	.4062	.1347	.4700	.1422			.4397	.1391			.3874	[illegible]
[illegible]	.2535	.0912	.3677	.1321	.4382	.1389	.4710	.1264	.4576	.1365	.4423	.1358	.3644	[illegible]
[illegible]	.0533	-.0433			.4495	.1354	.4610	.1364	.4633	.1339	.4480	.1341	.3277	.0981
[illegible]	.0345	-.0361							.4570	.1258	.4549	.1255	.3035	.0957
[illegible]	.0377	-.0233	.0558	-.0798	.1243	-.0577	.1435	-.0545	.1592	-.0489	.4443	.1176	.2956	.0943
[illegible]			.0439	-.0769	.1059	-.0713	.1313	-.0719			.1332	-.0533	.2762	[illegible]
[illegible]					.0958	-.0753	.1328	-.0850	.1323	-.0773	.1146	-.0930	-.0880	[illegible]
[illegible]	-.0267	-.0343	.0279	-.0614	.0848	-.0811	.0784	-.1095	-.0459	-.1398	-.0706	-.1334	-.0873	-.1397
.90	-.1474	-.0991	-.1114	-.1464			-.0794	-.1271	-.0743	-.1282	-.0874	-.1325	-.0842	-.1339
.90	-.1372	-.1419	-.1266	-.1337	-.0981	-.1256	-.0900	-.1266	-.0791	-.1275	-.0948	-.1335		
.95	-.1330	-.1350	-.1306	-.1328			-.0949	-.1265	-.0850	-.1275	-.1015	-.1338	-.0552	-.1611

TAIL 1

	Cp at y/b of													
	0.02		0.22		0.44		0.56		0.67		0.83		0.98	
x/c	U.S.	L.S.	U.S.	L.S.	U.S.	L.S.	U.S.	L.S.	U.S.	L.S.	U.S.	L.S.	U.S.	L.S.
.05	.1592	.0322	.3904	.0783			.4088	.1029			.4035	-.0354	.4877	.0989
.10	.2037	.0135					.4352	.1090	.4415	.0958			.4848	.1013
.15					.3545	.0988	.4078	.1063	.4452	.1069			.4604	.0821
.20	.2050	-.0035					.3761	.1033	.4286	.1046			.4415	.0541
.25	.0879	-.0754	.0563	.0213	.2866	.0818	.3522	.0981	.4100	.1021	.4579	.0909	.4259	.0362
.30			-.0073	-.0979			.3273	.0813	.3933	.0958	.4503	.0901	.3998	.0322
.40									.0875	-.0601	.4061	.0767	.3607	.0312
.50					-.0190	-.0915	.0273	-.0806	.0630	-.0779	.1042	-.0698	.2848	-.0031
.60	.1641	-.0422	.0648	-.0873			.0120	-.0929	.0526	-.0847	.0399	-.1114	-.1051	-.1422
.70					.0137	-.1017	-.0749	-.1489	-.1019	-.1433	-.0909	-.1360	-.1272	-.1390
.80	-.0646	-.1107	-.0708	-.1533	-.0980	-.1394	-.1295	-.1365			-.1061	-.1339		
.90	.0233	-.1391	-.0895	-.1398	-.1012	-.1383	-.1228	-.1358	-.1338	-.1309	-.1146	-.1332	-.1092	-.1409
.95			-.0957	-.1251	-.0986	-.1386	-.1190	-.1354	-.1356	-.1317	-.1226	-.1339	-.1176	-.1472

TAIL 2

TABLE XX. - CONTINUED

(i) α = 11.95°

	Cp at y/b of													
	0.02		0.22		0.44		0.56		0.67		0.83		0.98	
x/c	U.S.	L.S.	U.S.	L.S.	U.S.	L.S.	U.S.	L.S.	U.S.	L.S.	U.S.	L.S.	U.S.	L.S.
.05			.3957	.1955	.3256	.1856	.3479	.1937						
.10	.2462	.1038	.3884	.1818	.3887	.1912			.4098	.1862			.3872	.1414
.15	.2477	.1246	.3544	.1811	.3948	.1850			.3975	.1797			.3498	.1419
.20	.2128	.1207	.3172	.1749	.3870	.1829	.3996	.1643	.3969	.1776	.4111	.1795	.3313	.1367
.25	.0297	-.0314			.3801	.1806	.3833	.1787	.3975	.1748	.4102	.1763	.3080	.1320
.30	.0064	-.0167							.3891	.1705	.4028	.1665	.2918	.1288
.40	-.0022	.0057	.0275	-.0587	.0946	-.0348	.1012	-.0322	.1123	-.0263	.3887	.1624	.2851	.1141
.50			.0152	-.0562	.0799	-.0483	.0957	-.0496			.1165	-.0370	.2625	.1113
.60					.0682	-.0519	.1028	-.0641	.0873	-.0560	.0738	-.0732	-.0897	-.1356
.70	-.0563	-.0090	-.0029	-.0397	.0549	-.0584	.0557	-.0908	-.0693	-.1471	-.0958	-.1327	-.1038	-.1292
.80	-.1618	-.0781	-.1292	-.1387			-.0938	-.1243	-.0919	-.1246	-.1121	-.1287	-.0602	-.1647
.90	-.1488	-.1330	-.1438	-.1289	-.1137	-.1226	-.1042	-.1224	-.0953	-.1229	-.1187	-.1289		
.95	-.1433	-.1378	-.1311	-.1264			-.1088	-.1224	-.1002	-.1229	-.1228	-.1292	-.0944	-.1667

TAIL 1

	Cp at y/b of													
	0.02		0.22		0.44		0.56		0.67		0.83		0.98	
x/c	U.S.	L.S.	U.S.	L.S.	U.S.	L.S.	U.S.	L.S.	U.S.	L.S.	U.S.	L.S.	U.S.	L.S.
.05	.1735	.0110	.3158	.0834			.2931	.1283			.2729	-.0039	.3562	.1377
.10	.2118	-.0062					.3180	.1320	.3232	.1326			.3605	.1359
.15					.2636	.1058	.2962	.1279	.3275	.1426			.3445	.1088
.20	.2155	-.0181					.2675	.1211	.3162	.1370			.3305	.0846
.25	.0739	-.0838	.0377	.0244	.1991	.0831	.2415	.1129	.2993	.1317	.3462	.1352	.3273	.0743
.30			.0291	-.0972			.2171	.0928	.2797	.1230	.3421	.1334	.3187	.0724
.40									.0243	-.0448	.3098	.1130	.2922	.0645
.50					-.0366	-.0872	-.0367	-.0731	-.0031	-.0650	.0512	-.0477	.2332	.0214
.60	.1426	-.0539	.0761	-.0779			-.0457	-.0837	-.0171	-.0724	-.0072	-.0958	-.1166	-.1625
.70					-.0228	-.0985	-.0988	-.1424	-.1392	-.1633	-.1185	-.1606	-.1283	-.1622
.80	-.0523	-.1185	-.0567	-.1539	-.1331	-.1442	-.1405	-.1457			-.1324	-.1426		
.90	.0031	-.1602	-.0817	-.1522	-.1415	-.1442	-.1404	-.1436	-.1442	-.1387	-.1378	-.1383	-.1129	-.1314
.95			-.0900	-.1414	-.1418	-.1439	-.1393	-.1438	-.1381	-.1393	-.1426	-.1387	-.1252	-.1388

TAIL 2

TABLE XX. - CONTINUED
(j) α = 15.95°

	Cp at y/b of													
	0.02		0.22		0.44		0.56		0.67		0.83		0.98	
x/c	U.S.	L.S.	U.S.	L.S.	U.S.	L.S.	U.S.	L.S.	U.S.	L.S.	U.S.	L.S.	U.S.	L.S.
.05			.4293	.2855	.3351	.2856	.3514	.2987						
.10	.2960	.1910	.4214	.2880	.3988	.2981			.4117	.2908			.3855	.2353
.15	.2891	.2013	.3787	.2849	.4036	.2899			.3937	.2836			.3475	.2319
.20	.2428	.2006	.3307	.2706	.3947	.2908	.3880	.2464	.3995	.2820	.4114	.2817	.3290	.2229
.25	.0427	.0185			.3850	.2920	.3878	.2832	.4003	.2795	.4091	.2823	.3065	.2147
.30	.0143	.0403							.3926	.2744	.4017	.2793	.2968	.2104
.40	-.0037	.0690	.0217	-.0069	.0844	.0198	.0991	.0252	.1119	.0327	.3870	.2647	.2899	.1916
.50			.0032	-.0036	.0694	.0089	.0842	.0098			.1075	.0197	.2666	.1830
.60					.0553	.0054	.0817	-.0182	.0830	.0010	.0647	-.0250	-.0795	-.1118
.70	-.0795	.0563	-.0237	.0181	.0389	-.0032	.0435	-.0409	-.0757	-.1245	-.0997	-.1244	-.0832	-.1057
.80	-.1684	-.0297	-.1444	-.1025			-.1022	-.1195	-.1005	-.1091	-.1160	-.1106	-.0851	-.1246
.90	-.1532	-.0996	-.1405	-.1187	-.1223	-.1087	-.1117	-.1029	-.1052	-.1008	-.1177	-.1083		
.95	-.1402	-.1124	-.1301	-.1165			-.1135	-.1015	-.1072	-.1003	-.1093	-.1081	-.1265	-.1594

TAIL 1

	Cp at y/b of													
	0.02		0.22		0.44		0.56		0.67		0.83		0.98	
x/c	U.S.	L.S.	U.S.	L.S.	U.S.	L.S.	U.S.	L.S.	U.S.	L.S.	U.S.	L.S.	U.S.	L.S.
.05	.2244	-.0588	.2031	.0640			.1005	.1592			.0377	.0202	.1062	.2022
.10	.2290	-.0489					.1132	.1518	.1045	.1676			.1073	.2090
.15					.0963	.1011	.0913	.1364	.0941	.1680			.0986	.2026
.20	.1692	-.0657					.0646	.1210	.0792	.1547			.0937	.1883
.25	.0184	-.1221	.0470	.0210	.0350	.0763	.0411	.1078	.0601	.1425	.0937	.1839	.0930	.1714
.30			.0331	-.0998			.0168	.0897	.0427	.1280	.0892	.1748	.0910	.1633
.40									-.1042	-.0413	.0672	.1367	.0925	.1357
.50					-.0929	-.0864	-.1159	-.0666	-.1298	-.0594	-.0812	-.0334	.0634	.0701
.60	.1102	-.0811	.0532	-.0604			-.1230	-.0785	-.1380	-.0644	-.1213	-.0838	-.1649	-.1526
.70					-.1135	-.0918	-.1590	-.1393	-.1678	-.1627	-.1762	-.1588	-.1648	-.1506
.80	-.0567	-.1349	-.0866	-.1508	-.1800	-.1628	-.1837	-.1781			-.1696	-.1665		
.90	-.0274	-.1705	-.1075	-.1725	-.1797	-.1607	-.1729	-.1738	-.1654	-.1722	-.1634	-.1669	-.1550	-.1388
.95			-.1151	-.1572	-.1734	-.1589	-.1679	-.1673	-.1666	-.1677	-.1663	-.1685	-.1637	-.1583

TAIL 2

TABLE XX. - CONCLUDED

(k) α = 19.95°

	Cp at y/b of													
	0.02		0.22		0.44		0.56		0.67		0.83		0.98	
x/c	U.S.	L.S.	U.S.	L.S.	U.S.	L.S.	U.S.	L.S.	U.S.	L.S.	U.S.	L.S.	U.S.	L.S.
.05			.4878	.4102	.3681	.4206	.3858	.4367						
.10	.3655	.2861	.4725	.4214	.4417	.4421			.4419	.4269			.3906	.3473
.15	.3472	.3003	.4208	.4037	.4469	.4343			.4309	.4207			.3538	.3370
.20	.2856	.2976	.3669	.3766	.4363	.4377	.4183	.3849	.4306	.4221	.4251	.4161	.3367	.3269
.25	.0625	.0785			.4252	.4330	.4248	.4262	.4316	.4191	.4207	.4231	.3233	.3162
.30	.0284	.1120							.4214	.4135	.4137	.4096	.3164	.3076
.40	.0104	.1549	.0389	.0553	.1030	.0914	.1172	.1064	.1256	.1137	.3984	.3963	.3136	.2793
.50			.0173	.0604	.0867	.0808	.1011	.0889			.1078	.0908	.2946	.2744
.60					.0711	.0726	.0903	.0578	.0932	.0805	.0676	.0395	-.0629	-.0778
.70	-.0693	.1414	-.0144	.0944	.0529	.0605	.0535	.0231	-.0722	-.0802	-.0967	-.1063	-.0492	-.0628
.80	-.1652	.0271	-.1406	-.0531			-.0983	-.0974	-.0970	-.0995	-.0990	-.0831	-.0449	-.0698
.90	-.1454	-.0548	-.1343	-.0682	-.0979	-.1001	-.0993	-.0858	-.0799	-.0737	-.0771	-.0772		
.95	-.1262	-.0726	-.1245	-.0658			-.0804	-.0764	-.0679	-.0672	-.0735	-.0761	-.1443	-.1511

TAIL 1

	Cp at y/b of													
	0.02		0.22		0.44		0.56		0.67		0.83		0.98	
x/c	U.S.	L.S.	U.S.	L.S.	U.S.	L.S.	U.S.	L.S.	U.S.	L.S.	U.S.	L.S.	U.S.	L.S.
.05	.1724	-.0667	.0852	.0835			-.0079	.1969			-.0507	.2756	-.0298	.2733
.10	.1714	-.0710					.0160	.1761	-.0018	.1854			-.0257	.2571
.15					.0244	.1221	.0103	.1545	-.0061	.1793			-.0312	.2332
.20	.1081	-.0791					-.0051	.1375	-.0092	.1619			-.0364	.2063
.25	-.0242	-.1278	-.0184	.0264	-.0273	.0951	-.0227	.1245	-.0207	.1485	-.0274	.1830	-.0405	.1883
.30			-.0277	-.0882			-.0410	.1047	-.0318	.1329	-.0346	.1720	-.0474	.1704
.40									-.1397	-.0413	-.0499	.1278	-.0518	.1484
.50					-.1231	-.0674	-.1418	-.0553	-.1598	-.0515	-.1438	-.0308	-.0720	.0785
.60	.0579	-.0932	-.0149	-.0456			-.1509	-.0651	-.1646	-.0575	-.1726	-.0812	-.1853	-.1536
.70					-.1420	-.0234	-.1752	-.1260	-.1884	-.1528	-.1868	-.1557	-.1801	-.1573
.80	-.0872	-.1487	-.1314	-.1522	-.1950	-.1346	-.1954	-.1508			-.1863	-.1631		
.90	-.0803	-.1743	-.1494	-.1774	-.1907	-.1498	-.1860	-.1399	-.1831	-.1627	-.1827	-.1659	-.1652	-.1493
.95			-.1555	-.1699	-.1851	-.1546	-.1831	-.1408	-.1823	-.1629	-.1863	-.1683	-.1776	-.1703

TAIL 2

TABLE XXI. - PRESSURE COEFFICIENTS, $\Lambda = 45°$, $\delta = -15°$, $M = 3.70$

(a) $\alpha = -4.30°$

	C_p at y/b of													
	0.02		0.22		0.44		0.56		0.67		0.83		0.98	
x/c	U.S.	L.S.	U.S.	L.S.	U.S.	L.S.	U.S.	L.S.	U.S.	L.S.	U.S.	L.S.	U.S.	L.S.
.05			.6979	-.0126	.6663	-.0122	.6684	-.0140						
.10	.1082	.0018	.6303	-.0275	.7424	-.0242			.7204	-.0210			.6937	-.0110
.15	.1224	.0031	.5918	-.0357	.7200	-.0294			.7151	-.0263			.6830	-.0174
.20	.1323	-.0029	.5661	-.0306	.6790	-.0318	.6718	.0087	.7180	-.0239	.7111	-.0243	.6706	-.0192
.25	.0873	-.0276			.6528	-.0348	.6909	-.0308	.7129	-.0321	.7187	-.0295	.6517	-.0183
.30	.0952	-.0297							.6956	-.0343	.7139	-.0331	.6252	-.0192
.40	.1219	-.0401	.2622	-.0487	.2917	-.0562	.3215	-.0541	.3618	-.0575	.6836	-.0375	.5975	-.0201
.50			.2468	-.0543	.2885	-.0582	.3026	-.0587			.3682	-.0595	.5524	-.0208
.60					.2812	-.0571	.2839	-.0243	.3160	-.0519	.3164	-.0629	.0856	-.0682
.70	.1231	-.0426	.2574	-.0490	.2723	-.0571	.2654	-.0543	.1160	-.0567	.1084	-.0612	.0472	-.0647
.80	.0093	-.0552	.0965	-.0551			.0786	-.0561	.0789	-.0492	.0916	-.0612	.0376	-.0646
.90	-.0191	-.0615	.0550	-.0551	.0586	-.0431	.0671	-.0565	.0731	-.0588	.0836	-.0609		
.95	-.0245	-.0593	.0452	-.0557			.0618	-.0567	.0663	-.0592	.0756	-.0607	.0256	-.0597

TAIL 1

	C_p at y/b of													
	0.02		0.22		0.44		0.56		0.67		0.83		0.98	
x/c	U.S.	L.S.	U.S.	L.S.	U.S.	L.S.	U.S.	L.S.	U.S.	L.S.	U.S.	L.S.	U.S.	L.S.
.05	.5799	-.0235	.8192	-.0118			.7902	-.0133			.7081	-.0184	.7722	-.0042
.10	.4789	-.0192					.8383	-.0221	.3034	.0224			.7609	-.0119
.15					.8269	-.0228	.8312	-.0265	.8404	-.0212			.7337	-.0157
.20	.4323	-.0288					.8290	-.0305	.8431	-.0294			.7127	-.0174
.25	.2590	-.0518	.4302	-.0358	.7888	-.0334	.8174	-.0332	.8357	-.0322	.8076	-.0200	.6990	-.0198
.30			.3277	-.0497			.7315	-.0357	.8127	-.0337	.8178	-.0265	.6788	-.0183
.40									.4033	-.0564	.7789	-.0326	.6500	-.0225
.50					.3395	-.0427	.3478	-.0480	.3654	-.0495	.3906	-.0488	.5756	-.0378
.60	.2760	.0046	.2796	-.0382			.3495	-.0523	.3550	-.0455	.2964	-.0447	.0878	-.0457
.70					.3016	-.0463	.2106	-.0512	.1298	-.0364	.1237	-.0441	.0463	-.0378
.80	.0863	-.0318	.0852	-.0536	.1039	-.0512	.1024	-.0527			.0995	-.0446		
.90	.0328	-.0432	.0595	-.0539	.0809	-.0528	.0861	-.0522	.0871	-.0471	.0858	-.0373	.0245	-.0405
.95			.0533	-.0539	.0722	-.0524	.0796	-.0522	.0825	-.0472	.0761	-.0452	.0157	-.0458

TAIL 2

OF POOR QUALITY

TABLE XXI. - CONTINUED
(b) α = -2.30°

	Cp at y/b of													
	0.02		0.22		0.44		0.56		0.67		0.83		0.98	
x/c	U.S.	L.S.	U.S.	L.S.	U.S.	L.S.	U.S.	L.S.	U.S.	L.S.	U.S.	L.S.	U.S.	L.S.
.05			.6135	.0033	.5708	-.0037	.5808	-.0017						
.10	.1519	-.0050	.6093	-.0140	.6172	-.0144			.6401	-.0099			.6056	-.0039
.15	.1675	-.0025	.5788	-.0246	.6440	-.0196			.6260	-.0154			.6025	-.0099
.20	.1846	-.0054	.5506	-.0236	.6310	-.0226	.6343	-.0057	.6272	-.0190	.6285	-.0156	.5873	-.0115
.25	.1070	-.0328			.6213	-.0256	.6288	-.0217	.6306	-.0214	.6355	-.0203	.5632	-.0099
.30	.1039	-.0335							.6230	-.0239	.6301	-.0242	.5399	-.0097
.40	.1243	-.0399	.2281	-.0518	.2539	-.0568	.3033	-.0533	.3275	-.0543	.6074	-.0292	.5167	-.0099
.50			.2129	-.0562	.2651	-.0605	.2846	-.0608			.3250	-.0584	.4774	-.0132
.60					.2564	-.0570	.2839	-.0355	.2938	-.0526	.2768	-.0642	.0649	-.0680
.70	.1424	-.0434	.1797	-.0493	.2494	-.0559	.2368	-.0539	.1042	-.0552	.0877	-.0613	.0227	-.0663
.80	.0158	-.0562	.0505	-.0552			.0675	-.0549	.0646	-.0507	.0711	-.0610	.0139	-.0650
.90	-.0201	-.0635	.0316	-.0556	.0478	-.0447	.0520	-.0553	.0581	-.0590	.0644	-.0608		
.95	-.0263	-.0596	.0284	-.0560			.0459	-.0555	.0524	-.0592	.0574	-.0608	.0064	-.0586

TAIL 1

	Cp at y/b of													
	0.02		0.22		0.44		0.56		0.67		0.83		0.98	
x/c	U.S.	L.S.	U.S.	L.S.	U.S.	L.S.	U.S.	L.S.	U.S.	L.S.	U.S.	L.S.	U.S.	L.S.
.05	.3929	-.0152	.7181	-.0065			.6989	-.0057			.6248	-.0171	.6967	.0007
.10	.3239	-.0132					.7394	-.0147	.7114	.0184			.6911	-.0070
.15					.7372	-.0187	.7378	-.0205	.7400	-.0161			.6637	-.0109
.20	.3281	-.0188					.7380	-.0236	.7422	-.0229			.6428	-.0128
.25	.1772	-.0486	.3886	-.0322	.7148	-.0285	.7339	-.0257	.7414	-.0251	.7158	-.0155	.6285	-.0141
.30			.2839	-.0516			.7172	-.0303	.7315	-.0269	.7227	-.0219	.6118	-.0151
.40									.3630	-.0541	.6955	-.0292	.5827	-.0138
.50					.2954	-.0419	.3061	-.0479	.3252	-.0493	.3471	-.0518	.5204	-.0247
.60	.2219	.0025	.2310	-.0406			.3060	-.0511	.3154	-.0442	.2598	-.0461	.0690	-.0466
.70					.2609	-.0451	.1816	-.0500	.1059	-.0373	.1013	-.0456	.0298	-.0393
.80	.0692	-.0322	.0550	-.0553	.0780	-.0496	.0775	-.0518			.0795	-.0462		
.90	.0142	-.0430	.0338	-.0549	.0564	-.0520	.0615	-.0513	.0627	-.0475	.0667	-.0399	.0109	-.0414
.95			.0285	-.0547	.0486	-.0513	.0555	-.0515	.0580	-.0475	.0578	-.0469	.0025	-.0465

TAIL 2

TABLE XXI. - CONTINUED

(c) α = -0.30°

	Cp at y/b of													
	0.02		0.22		0.44		0.56		0.67		0.83		0.98	
x/c	U.S.	L.S.	U.S.	L.S.	U.S.	L.S.	U.S.	L.S.	U.S.	L.S.	U.S.	L.S.	U.S.	L.S.
.05			.5378	.0190	.5004	.0074	.5166	.0107						
.10	.1879	-.0037	.5465	-.0014	.5480	-.0016			.5745	.0030			.5444	.0075
.15	.1970	.0015	.5314	-.0124	.5649	-.0063			.5625	-.0028			.5381	.0005
.20	.2123	-.0008	.5137	-.0141	.5639	-.0100	.5738	-.0015	.5604	-.0063	.5646	-.0049	.5209	-.0017
.25	.1093	-.0327			.5564	-.0127	.5605	-.0102	.5632	-.0031	.5727	-.0092	.5005	-.0011
.30	.1056	-.0345							.5561	-.0118	.5667	-.0133	.4760	-.0014
.40	.1165	-.0384	.2054	-.0501	.2232	-.0539	.2641	-.0496	.2737	-.0488	.5465	-.0185	.4560	-.0039
.50			.1894	-.0557	.2363	-.0600	.2537	-.0590			.2843	-.0535	.4204	-.0060
.60					.2329	-.0573	.2604	-.0361	.2544	-.0527	.2319	-.0623	.0459	-.0656
.70	.1312	-.0422	.1521	-.0479	.2258	-.0545	.1996	-.0525	.0814	-.0537	.0631	-.0590	.0070	-.0619
.80	.0132	-.0547	.0285	-.0530			.0530	-.0530	.0501	-.0490	.0465	-.0588	-.0029	-.0607
.90	-.0251	-.0616	.0061	-.0537	.0357	-.0435	.0383	-.0532	.0424	-.0570	.0403	-.0587		
.95	-.0306	-.0578	.0028	-.0545			.0315	-.0534	.0374	-.0572	.0343	-.0585	-.0103	-.0553

TAIL 1

	Cp at y/b of													
	0.02		0.22		0.44		0.56		0.67		0.83		0.98	
x/c	U.S.	L.S.	U.S.	L.S.	U.S.	L.S.	U.S.	L.S.	U.S.	L.S.	U.S.	L.S.	U.S.	L.S.
.05	.2545	-.0064	.6186	.0036			.6192	.0031			.5563	-.0134	.6285	.0091
.10	.2182	-.0032					.6548	-.0058	.6408	.0184			.6317	.0010
.15					.6502	-.0105	.6525	-.0122	.6582	-.0084			.6032	-.0025
.20	.2352	-.0053					.6524	-.0147	.6588	-.0141			.5843	-.0041
.25	.1181	-.0397	.3454	-.0238	.6379	-.0196	.6499	-.0159	.6547	-.0168	.6402	-.0075	.5707	-.0049
.30			.2426	-.0503			.6392	-.0223	.6494	-.0194	.6487	-.0137	.5562	-.0054
.40									.3187	-.0512	.6218	-.0220	.5306	-.0078
.50					.2560	-.0422	.2670	-.0491	.2823	-.0505	.3022	-.0514	.4740	-.0141
.60	.1723	-.0004	.1818	-.0412			.2666	-.0504	.2742	-.0434	.2226	-.0458	.0555	-.0449
.70					.2239	-.0437	.1537	-.0485	.0847	-.0366	.0774	-.0445	.0196	-.0386
.80	.0502	-.0333	.0305	-.0557	.0574	-.0483	.0569	-.0503			.0592	-.0450		
.90	.0049	-.0438	.0135	-.0548	.0358	-.0507	.0416	-.0504	.0445	-.0459	.0515	-.0390	.0005	-.0400
.95			.0109	-.0535	.0291	-.0507	.0353	-.0506	.0398	-.0459	.0408	-.0454	-.0079	-.0446

TAIL 2

ORIGINAL PAGE IS
OF POOR QUALITY

TABLE XXI. - CONTINUED

(d) α = 1.71°

	Cp at y/b of													
	0.02		0.22		0.44		0.56		0.67		0.83		0.98	
x/c	U.S.	L.S.	U.S.	L.S.	U.S.	L.S.	U.S.	L.S.	U.S.	L.S.	U.S.	L.S.	U.S.	L.S.
.05			.4761	.0357	.4409	.0217	.4565	.0238						
.10	.2116	-.0034	.4879	.0121	.4810	.0121			.5095	.0154			.4883	.0186
.15	.2189	.0078	.4758	.0008	.4862	.0069			.5023	.0095			.4779	.0103
.20	.2323	.0085	.4575	-.0018	.4972	.0032	.5103	.0049	.5001	.0058	.5037	.0068	.4608	.0072
.25	.1074	-.0321			.4941	.0004	.4931	.0021	.5007	.0028	.5094	.0032	.4394	.0072
.30	.1006	-.0348							.4957	.0001	.5052	-.0003	.4154	.0067
.40	.1023	-.0372	.1762	-.0493	.2032	-.0521	.2221	-.0477	.2345	-.0452	.4857	-.0061	.3959	.0029
.50			.1637	-.0557	.1954	-.0602	.2139	-.0582			.2458	-.0493	.3687	-.0022
.60					.1968	-.0605	.2302	-.0393	.2080	-.0540	.1953	-.0616	.0258	-.0655
.70	.1092	-.0430	.1344	-.0482	.1930	-.0568	.1676	-.0543	.0628	-.0545	.0422	-.0589	-.0067	-.0611
.80	.0057	-.0556	.0187	-.0522			.0336	-.0538	.0328	-.0499	.0255	-.0586	-.0152	-.0596
.90	-.0320	-.0588	-.0072	-.0531	.0226	-.0452	.0216	-.0540	.0251	-.0574	.0192	-.0586		
.95	-.0365	-.0570	-.0121	-.0539			.0159	-.0541	.0206	-.0576	.0139	-.0583	-.0202	-.0546

TAIL 1

	Cp at y/b of													
	0.02		0.22		0.44		0.56		0.67		0.83		0.98	
x/c	U.S.	L.S.	U.S.	L.S.	U.S.	L.S.	U.S.	L.S.	U.S.	L.S.	U.S.	L.S.	U.S.	L.S.
.05	.1596	.0005	.5201	.0167			.5439	.0138			.4922	-.0093	.5612	.0180
.10	.1484	.0061					.5746	.0046	.5673	.0222			.5696	.0095
.15					.5656	.0009	.5743	-.0014	.5835	.0016			.5446	.0067
.20	.1611	.0041					.5696	-.0034	.5803	-.0031			.5271	.0053
.25	.0753	-.0302	.2904	-.0133	.5581	-.0081	.5683	-.0056	.5770	-.0054	.5699	.0012	.5165	.0049
.30			.1851	-.0470			.5562	-.0115	.5723	-.0075	.5776	-.0048	.5019	.0046
.40									.2760	-.0466	.5526	-.0138	.4808	.0024
.50					.2150	-.0439	.2266	-.0503	.2388	-.0514	.2612	-.0494	.4284	-.0112
.60	.1239	-.0036	.1285	-.0405			.2261	-.0497	.2320	-.0430	.1860	-.0469	.0408	-.0458
.70					.1840	-.0420	.1260	-.0463	.0598	-.0358	.0531	-.0447	.0059	-.0390
.80	.0353	-.0350	.0059	-.0528	.0343	-.0457	.0345	-.0480			.0362	-.0449		
.90	-.0035	-.0461	-.0050	-.0524	.0135	-.0477	.0203	-.0478	.0235	-.0445	.0297	-.0391	-.0122	-.0408
.95			-.0055	-.0526	.0073	-.0479	.0149	-.0479	.0190	-.0445	.0196	-.0452	-.0204	-.0457

TAIL 2

TABLE XXI.- CONTINUED

(e) α = 3.70°

	Cp at y/b of													
	0.02		0.22		0.44		0.56		0.67		0.83		0.98	
x/c	U.S.	L.S.	U.S.	L.S.	U.S.	L.S.	U.S.	L.S.	U.S.	L.S.	U.S.	L.S.	U.S.	L.S.
.05			.4184	.0554	.3879	.0383	.4002	.0395						
.10	.2430	.0016	.4307	.0291	.4241	.0292			.4496	.0310			.4449	.0335
.15	.2262	.0178	.4227	.0179	.4284	.0238			.4453	.0251			.4299	.0238
.20	.2401	.0224	.4079	.0143	.4295	.0200	.4498	.0151	.4443	.0214	.4527	.0224	.4153	.0201
.25	.1051	-.0281			.4287	.0173	.4338	.0178	.4459	.0181	.4564	.0195	.3927	.0191
.30	.0947	-.0302							.4406	.0152	.4515	.0160	.3704	.0185
.40	.0858	-.0383	.1421	-.0458	.1707	-.0477	.1811	-.0430	.2092	-.0386	.4351	.0095	.3519	.0148
.50			.1301	-.0525	.1587	-.0567	.1731	-.0547			.2045	-.0427	.3246	.0079
.60					.1589	-.0584	.1932	-.0395	.1668	-.0521	.1601	-.0582	.0128	-.0633
.70	.0731	-.0408	.1079	-.0473	.1573	-.0574	.1353	-.0554	.0399	-.0549	.0229	-.0582	-.0149	-.0612
.80	-.0093	-.0551	.0067	-.0510			.0177	-.0537	.0140	-.0489	.0072	-.0577	-.0168	-.0595
.90	-.0392	-.0554	-.0167	-.0517	.0101	-.0452	.0064	-.0537	.0062	-.0558	.0014	-.0575		
.95	-.0419	-.0548	-.0218	-.0524			.0018	-.0539	.0024	-.0561	-.0033	-.0574	-.0219	-.0537

TAIL 1

	Cp at y/b of													
	0.02		0.22		0.44		0.56		0.67		0.83		0.98	
x/c	U.S.	L.S.	U.S.	L.S.	U.S.	L.S.	U.S.	L.S.	U.S.	L.S.	U.S.	L.S.	U.S.	L.S.
.05	.1044	.0060	.4261	.0314			.4658	.0263			.4290	-.0040	.4986	.0290
.10	.0993	.0115					.4924	.0181	.4938	.0283			.5096	.0199
.15					.4811	.0152	.4934	.0125	.5056	.0137			.4909	.0168
.20	.0975	.0075					.4893	.0106	.5043	.0097			.4727	.0153
.25	.0349	-.0242	.2169	-.0013	.4786	.0064	.4867	.0081	.5000	.0076	.4988	.0124	.4637	.0140
.30			.1157	-.0417			.4729	.0015	.4951	.0053	.5060	.0071	.4497	.0134
.40									.2320	-.0412	.4854	-.0027	.4319	.0099
.50					.1780	-.0425	.1868	-.0482	.1973	-.0488	.2208	-.0444	.3815	-.0071
.60	.1131	-.0072	.0611	-.0389			.1850	-.0498	.1905	-.0427	.1511	-.0467	.0278	-.0441
.70					.1413	-.0398	.0998	-.0438	.0419	-.0343	.0316	-.0432	-.0043	-.0381
.80	.0130	-.0370	-.0040	-.0491	.0121	-.0422	.0159	-.0450			.0163	-.0433		
.90	.0057	-.0498	-.0113	-.0500	-.0082	-.0442	.0018	-.0450	.0079	-.0424	.0120	-.0380	-.0211	-.0426
.95			-.0125	-.0507	-.0132	-.0444	-.0033	-.0450	.0035	-.0424	.0021	-.0435	-.0291	-.0475

TAIL 2

TABLE XXI. - CONTINUED

(f) α = 5.71°

	Cp at y/b of													
	0.02		0.22		0.44		0.56		0.67		0.83		0.98	
x/c	U.S.	L.S.	U.S.	L.S.	U.S.	L.S.	U.S.	L.S.	U.S.	L.S.	U.S.	L.S.	U.S.	L.S.
.05			.3768	.0794	.3532	.0589	.3665	.0597						
.10	.2458	.0112	.3857	.0503	.3866	.0503			.4150	.0521			.4221	.0531
.15	.2172	.0325	.3765	.0397	.3882	.0450			.4104	.0462			.4035	.0424
.20	.2278	.0371	.3632	.0360	.3877	.0414	.4050	.0294	.4093	.0422	.4244	.0427	.3903	.0378
.25	.0970	-.0213			.3856	.0386	.3951	.0383	.4104	.0391	.4282	.0409	.3687	.0361
.30	.0825	-.0227							.4052	.0359	.4213	.0373	.3451	.0352
.40	.0600	-.0346	.1093	-.0392	.1413	-.0401	.1512	-.0349	.1864	-.0283	.4057	.0302	.3264	.0321
.50			.0956	-.0460	.1308	-.0497	.1404	-.0476			.1805	-.0330	.3020	.0235
.60					.1244	-.0523	.1571	-.0367	.1383	-.0463	.1356	-.0516	.0071	-.0586
.70	.0368	-.0351	.0762	-.0421	.1198	-.0536	.1067	-.0541	.0258	-.0532	.0101	-.0562	-.0139	-.0608
.80	-.0285	-.0524	-.0074	-.0484			.0027	-.0511	-.0001	-.0467	-.0051	-.0554	-.0140	-.0604
.90	-.0456	-.0522	-.0269	-.0485	-.0017	-.0432	-.0081	-.0509	-.0087	-.0533	-.0109	-.0551		
.95	-.0466	-.0510	-.0313	-.0492			-.0123	-.0512	-.0124	-.0536	-.0154	-.0552	-.0182	-.0536

TAIL 1

	Cp at y/b of													
	0.02		0.22		0.44		0.56		0.67		0.83		0.98	
x/c	U.S.	L.S.	U.S.	L.S.	U.S.	L.S.	U.S.	L.S.	U.S.	L.S.	U.S.	L.S.	U.S.	L.S.
.05	.0647	.0027	.3328	.0439			.3819	.0407			.3624	.0020	.4301	.0413
.10	.0823	.0093					.4029	.0341	.4158	.0379			.4415	.0324
.15					.3832	.0310	.4032	.0295	.4218	.0291			.4274	.0287
.20	.0937	.0041					.4024	.0272	.4216	.0252			.4109	.0250
.25	.0448	-.0245	.1156	.0085	.3835	.0224	.3990	.0247	.4165	.0234	.4237	.0257	.4032	.0211
.30			.0403	-.0381			.3874	.0173	.4122	.0208	.4303	.0211	.3911	.0180
.40									.1840	-.0332	.4133	.0115	.3764	.0111
.50					.1278	-.0386	.1402	-.0424	.1522	-.0428	.1780	-.0385	.3319	-.0062
.60	.0840	-.0125	.0478	-.0384			.1389	-.0486	.1449	-.0427	.1161	-.0473	.0150	-.0418
.70					.0905	-.0413	.0664	-.0435	.0232	-.0341	.0120	-.0426	-.0137	-.0368
.80	-.0031	-.0400	-.0048	-.0478	-.0092	-.0414	-.0026	-.0436			-.0018	-.0422		
.90	.0092	-.0536	-.0152	-.0494	-.0269	-.0429	-.0154	-.0435	-.0086	-.0416	-.0038	-.0374	-.0289	-.0385
.95			-.0175	-.0501	-.0303	-.0426	-.0204	-.0435	-.0125	-.0414	-.0135	-.0426	-.0365	-.0439

TAIL 2

TABLE XXI.- CONTINUED
(g) α = 7.70°

	Cp at y/b of													
	0.02		0.22		0.44		0.56		0.67		0.83		0.98	
x/c	U.S.	L.S.	U.S.	L.S.	U.S.	L.S.	U.S.	L.S.	U.S.	L.S.	U.S.	L.S.	U.S.	L.S.
.05			.3796	.1076	.3491	.0842	.3609	.0845						
.10	.2589	.0263	.3866	.0741	.3826	.0749			.4062	.0773			.4153	.0759
.15	.2288	.0495	.3754	.0642	.3828	.0697			.4009	.0713			.3931	.0644
.20	.2340	.0559	.3609	.0619	.3832	.0661	.3906	.0496	.4010	.0673	.4161	.0672	.3808	.0590
.25	.0999	-.0133			.3796	.0633	.3890	.0635	.4021	.0640	.4199	.0664	.3606	.0559
.30	.0836	-.0135							.3968	.0607	.4124	.0626	.3376	.0548
.40	.0566	-.0256	.1021	-.0322	.1344	-.0306	.1450	-.0247	.1789	-.0160	.3972	.0549	.3181	.0515
.50			.0862	-.0388	.1241	-.0411	.1320	-.0385			.1740	-.0221	.2929	.0419
.60					.1159	-.0439	.1410	-.0323	.1303	-.0388	.1259	-.0441	.0048	-.0530
.70	.0186	-.0280	.0631	-.0359	.1088	-.0470	.0980	-.0510	.0203	-.0523	.0044	-.0552	-.0098	-.0600
.80	-.0378	-.0484	-.0155	-.0484			-.0013	-.0483	-.0048	-.0457	-.0102	-.0540	-.0137	-.0653
.90	-.0482	-.0515	-.0330	-.0473	-.0053	-.0412	-.0120	-.0481	-.0137	-.0518	-.0160	-.0536		
.95	-.0473	-.0501	-.0374	-.0478			-.0162	-.0483	-.0174	-.0522	-.0202	-.0538	-.0232	-.0529

TAIL 1

	Cp at y/b of													
	0.02		0.22		0.44		0.56		0.67		0.83		0.98	
x/c	U.S.	L.S.	U.S.	L.S.	U.S.	L.S.	U.S.	L.S.	U.S.	L.S.	U.S.	L.S.	U.S.	L.S.
.05	.0785	-.0089	.2515	.0489			.2904	.0547			.2937	.0085	.3598	.0561
.10	.1037	.0002					.3034	.0506	.3282	.0476			.3695	.0493
.15					.2768	.0440	.3021	.0465	.3288	.0457			.3585	.0452
.20	.1367	-.0050					.2999	.0436	.3274	.0424			.3471	.0391
.25	.0618	-.0306	.0771	.0109	.2731	.0357	.2976	.0409	.3233	.0406	.3440	.0407	.3389	.0319
.30			.0190	-.0366			.2869	.0332	.3194	.0380	.3488	.0371	.3280	.0260
.40									.1301	-.0253	.3345	.0263	.3167	.0161
.50					.0675	-.0340	.0842	-.0359	.1005	-.0355	.1322	-.0323	.2784	-.0029
.60	.0720	-.0143	.0366	-.0385			.0824	-.0432	.0942	-.0375	.0779	-.0475	.0001	-.0486
.70					.0312	-.0419	.0282	-.0490	.0010	-.0382	-.0086	-.0460	-.0242	-.0414
.80	-.0038	-.0426	-.0258	-.0509	-.0354	-.0439	-.0264	-.0464			-.0209	-.0459		
.90	-.0131	-.0562	-.0373	-.0513	-.0426	-.0457	-.0370	-.0465	-.0279	-.0456	-.0211	-.0403	-.0371	-.0416
.95			-.0408	-.0514	-.0426	-.0451	-.0414	-.0468	-.0307	-.0458	-.0302	-.0464	-.0446	-.0468

TAIL 2

TABLE XXI. - CONTINUED

(h) α = 9.71°

	Cp at y/b of													
	0.02		0.22		0.44		0.56		0.67		0.83		0.98	
x/c	U.S.	L.S.	U.S.	L.S.	U.S.	L.S.	U.S.	L.S.	U.S.	L.S.	U.S.	L.S.	U.S.	L.S.
.05			.3993	.1410	.3592	.1137	.3696	.1139						
.10	.2797	.0440	.4054	.1017	.3938	.1047			.4118	.1070			.4182	.1031
.15	.2519	.0682	.3934	.0927	.3934	.0995			.4062	.1009			.3931	.0912
.20	.2528	.0804	.3770	.0907	.3951	.0958	.3942	.0729	.4069	.0969	.4202	.0965	.3801	.0848
.25	.1104	-.0038			.3913	.0929	.3982	.0928	.4084	.0935	.4239	.0966	.3606	.0800
.30	.0921	-.0021							.4028	.0901	.4163	.0927	.3386	.0783
.40	.0626	-.0119	.1062	-.0230	.1373	-.0203	.1469	-.0134	.1803	-.0021	.4009	.0840	.3193	.0745
.50			.0889	-.0301	.1265	-.0315	.1327	-.0286			.1750	-.0089	.2936	.0643
.60					.1175	-.0346	.1342	-.0281	.1302	-.0298	.1249	-.0345	.0042	-.0462
.70	.0150	-.0192	.0625	-.0271	.1102	-.0387	.0975	-.0461	.0194	-.0506	.0020	-.0517	-.0061	-.0543
.80	-.0403	-.0431	-.0166	-.0468			-.0026	-.0448	-.0066	-.0427	-.0123	-.0498	-.0170	-.0650
.90	-.0466	-.0515	-.0342	-.0443	-.0076	-.0392	-.0138	-.0445	-.0155	-.0479	-.0182	-.0495		
.95	-.0446	-.0489	-.0387	-.0444			-.0179	-.0447	-.0193	-.0483	-.0225	-.0497	-.0191	-.0538

TAIL 1

	Cp at y/b of													
	0.02		0.22		0.44		0.56		0.67		0.83		0.98	
x/c	U.S.	L.S.	U.S.	L.S.	U.S.	L.S.	U.S.	L.S.	U.S.	L.S.	U.S.	L.S.	U.S.	L.S.
.05	.0993	-.0209	.1998	.0506			.1982	.0646			.2180	.0174	.2818	.0719
.10	.1109	-.0111					.2042	.0631	.2395	.0604			.2882	.0693
.15					.1849	.0522	.2004	.0590	.2267	.0611			.2786	.0644
.20	.1390	-.0161					.1953	.0559	.2232	.0585			.2699	.0561
.25	.0574	-.0379	.0459	.0115	.1767	.0443	.1913	.0534	.2186	.0568	.2532	.0564	.2652	.0455
.30			.0367	-.0352			.1833	.0451	.2150	.0532	.2560	.0540	.2557	.0377
.40									.0707	-.0160	.2454	.0411	.2460	.0272
.50					.0140	-.0303	.0351	-.0301	.0480	-.0279	.0823	-.0237	.2161	.0068
.60	.0617	-.0182	.0245	-.0383			.0275	-.0374	.0438	-.0305	.0369	-.0429	-.0170	-.0543
.70					-.0094	-.0406	.0149	-.0519	-.0175	-.0448	-.0285	-.0543	-.0352	-.0476
.80	-.0012	-.0468	-.0367	-.0576	-.0436	-.0499	-.0498	-.0543			-.0379	-.0515		
.90	-.0283	-.0591	-.0488	-.0564	-.0501	-.0515	-.0536	-.0524	-.0442	-.0502	-.0358	-.0447	-.0419	-.0456
.95			-.0519	-.0553	-.0498	-.0511	-.0523	-.0522	-.0469	-.0508	-.0451	-.0508	-.0475	-.0508

TAIL 2

TABLE XXI. - CONTINUED

(i) α = 11.70°

	Cp at y/b of													
	0.02		0.22		0.44		0.56		0.67		0.83		0.98	
x/c	U.S.	L.S.	U.S.	L.S.	U.S.	L.S.	U.S.	L.S.	U.S.	L.S.	U.S.	L.S.	U.S.	L.S.
.05			.4295	.1808	.3785	.1492	.3853	.1494						
.10	.3052	.0641	.4349	.1344	.4138	.1402			.4269	.1425			.4278	.1349
.15	.2809	.0937	.4213	.1265	.4145	.1352			.4209	.1365			.3996	.1232
.20	.2779	.1088	.4032	.1248	.4158	.1314	.4077	.1035	.4215	.1323	.4328	.1309	.3864	.1155
.25	.1249	.0096			.4130	.1283	.4157	.1294	.4231	.1289	.4364	.1321	.3669	.1092
.30	.1042	.0132							.4173	.1251	.4287	.1280	.3460	.1068
.40	.0734	.0076	.1155	-.0102	.1460	-.0064	.1552	.0029	.1871	.0155	.4126	.1185	.3271	.1117
.50			.0965	-.0177	.1341	-.0181	.1395	-.0137			.1804	.0074	.3013	.0908
.60					.1268	-.0217	.1369	-.0200	.1359	-.0164	.1294	-.0217	.0064	-.0392
.70	.0166	-.0068	.0666	-.0144	.1174	-.0263	.1032	-.0361	.0221	-.0461	.0025	-.0465	-.0027	-.0464
.80	-.0396	-.0347	-.0150	-.0428			-.0001	-.0375	-.0055	-.0375	-.0123	-.0438	-.0190	-.0615
.90	-.0433	-.0496	-.0333	-.0385	-.0055	-.0340	-.0115	-.0372	-.0143	-.0419	-.0185	-.0433		
.95	-.0404	-.0467	-.0376	-.0382			-.0159	-.0378	-.0183	-.0424	-.0229	-.0434	-.0071	-.0548

TAIL 1

	Cp at y/b of													
	0.02		0.22		0.44		0.56		0.67		0.83		0.98	
x/c	U.S.	L.S.	U.S.	L.S.	U.S.	L.S.	U.S.	L.S.	U.S.	L.S.	U.S.	L.S.	U.S.	L.S.
.05	.0936	-.0240	.1351	.0491			.1533	.0708			.1490	.0247	.2002	.0876
.10	.1057	-.0164					.1539	.0701	.1767	.0697			.2010	.0891
.15					.1391	.0566	.1463	.0658	.1541	.0699			.1910	.0820
.20	.1237	-.0205					.1364	.0625	.1459	.0667			.1829	.0689
.25	.0444	-.0410	.0275	.0116	.1268	.0487	.1297	.0602	.1373	.0650	.1601	.0669	.1779	.0566
.30			.0236	-.0337			.1199	.0514	.1305	.0614	.1590	.0656	.1720	.0494
.40									.0229	-.0104	.1447	.0535	.1644	.0428
.50					-.0070	-.0283	.0006	-.0259	.0041	-.0234	.0291	-.0172	.1408	.0216
.60	.0499	-.0213	.0122	-.0369			-.0120	-.0333	-.0019	-.0264	-.0041	-.0391	-.0343	-.0544
.70					-.0240	-.0389	-.0389	-.0510	-.0339	-.0464	-.0456	-.0579	-.0450	-.0516
.80	-.0101	-.0489	-.0436	-.0591	-.0504	-.0562	-.0600	-.0617			-.0522	-.0577		
.90	-.0376	-.0601	-.0547	-.0626	-.0564	-.0553	-.0568	-.0578	-.0542	-.0546	-.0474	-.0485	-.0471	-.0492
.95			-.0575	-.0602	-.0553	-.0546	-.0567	-.0573	-.0549	-.0550	-.0545	-.0542	-.0535	-.0540

TAIL 2

TABLE XXI. - CONTINUED

(j) α = 15.70°

	Cp at y/b of													
	0.02		0.22		0.44		0.56		0.67		0.83		0.98	
x/c	U.S.	L.S.	U.S.	L.S.	U.S.	L.S.	U.S.	L.S.	U.S.	L.S.	U.S.	L.S.	U.S.	L.S.
.05			.5152	.2815	.4376	.2376	.4381	.2382						
.10	.3776	.1179	.5185	.2180	.4754	.2296			.4767	.2331			.4612	.2150
.15	.3615	.1775	.5014	.2136	.4801	.2255			.4701	.2262			.4279	.2029
.20	.3497	.1818	.4775	.2129	.4823	.2210	.4457	.1537	.4709	.2215	.4753	.2196	.4135	.1934
.25	.1653	.0483			.4786	.2177	.4722	.2171	.4731	.2179	.4791	.2237	.3927	.1847
.30	.1387	.0566							.4669	.2135	.4706	.2186	.3731	.1805
.40	.1039	.0593	.1443	.0234	.1781	.0292	.1834	.0416	.2121	.0602	.4530	.2066	.3588	.1709
.50			.1225	.0152	.1644	.0172	.1660	.0222			.2027	.0506	.3337	.1590
.60					.1553	.0133	.1515	-.0049	.1587	.0194	.1505	.0127	.0182	-.0228
.70	.0261	.0274	.0870	.0203	.1425	.0076	.1254	-.0110	.0321	-.0347	.0092	-.0350	.0016	-.0260
.80	-.0350	-.0105	-.0073	-.0307			.0091	-.0215	.0006	-.0252	-.0070	-.0287	-.0062	-.0464
.90	-.0351	-.0388	-.0286	-.0235	.0005	-.0227	-.0034	-.0205	-.0074	-.0268	-.0138	-.0274		
.95	-.0317	-.0382	-.0302	-.0223			-.0080	-.0208	-.0114	-.0272	-.0181	-.0274	-.0135	-.0470

TAIL 1

	Cp at y/b of													
	0.02		0.22		0.44		0.56		0.67		0.83		0.98	
x/c	U.S.	L.S.	U.S.	L.S.	U.S.	L.S.	U.S.	L.S.	U.S.	L.S.	U.S.	L.S.	U.S.	L.S.
.05	.0249	-.0093	.0474	.0626			.0561	.0836			.0634	.0308	.0740	.1098
.10	.0533	-.0096					.0582	.0837	.1033	.0790			.0714	.1087
.15					.0534	.0719	.0600	.0803	.0670	.0860			.0659	.0946
.20	.0504	-.0142					.0579	.0784	.0633	.0840			.0633	.0808
.25	.0044	-.0404	-.0083	.0254	.0495	.0636	.0569	.0759	.0607	.0822	.0687	.0823	.0634	.0722
.30			-.0157	-.0265			.0527	.0656	.0585	.0773	.0672	.0826	.0620	.0690
.40									-.0102	.0007	.0579	.0708	.0608	.0628
.50					-.0213	-.0218	-.0231	-.0165	-.0234	-.0134	-.0124	-.0061	.0431	.0398
.60	.0254	-.0221	-.0141	-.0304			-.0332	-.0250	-.0270	-.0170	-.0320	-.0308	-.0511	-.0477
.70					-.0362	-.0330	-.0500	-.0459	-.0433	-.0447	-.0566	-.0554	-.0537	-.0496
.80	-.0283	-.0513	-.0527	-.0568	-.0557	-.0571	-.0612	-.0621			-.0593	-.0589		
.90	-.0472	-.0628	-.0608	-.0624	-.0588	-.0588	-.0589	-.0609	-.0571	-.0574	-.0517	-.0520	-.0521	-.0479
.95			-.0629	-.0631	-.0573	-.0573	-.0591	-.0597	-.0581	-.0578	-.0576	-.0577	-.0582	-.0545

TAIL 2

TABLE XXI. - CONCLUDED

(h) α = 19.70°

	Cp at y/b of													
	0.02		0.22		0.44		0.56		0.67		0.83		0.98	
x/c	U.S.	L.S.	U.S.	L.S.	U.S.	L.S.	U.S.	L.S.	U.S.	L.S.	U.S.	L.S.	U.S.	L.S.
.05			.6206	.4101	.5119	.3540	.5029	.3568						
.10	.4728	.1875	.6222	.3254	.5530	.3471			.5392	.3546			.1844	.2011
.15	.4621	.2624	.6015	.3254	.5614	.3436			.5310	.3465			.1991	.1995
.20	.4391	.2780	.5703	.3250	.5648	.3381	.5072	.2640	.5317	.3418	.5249	.3386	[illegible]	[illegible]
.25	.2156	.1003			.5584	.3350	.5433	.3365	.5340	.3381	.5235	.3426	.2288	.2064
.30	.1825	.1147							.5274	.3327	.5117	.3354	.2345	.2105
.40	.1414	.1271	.1825	.0764	.2179	.0860	.2195	.0993	.2463	.1220	.4895	.3211	.2309	.2095
.50			.1569	.0657	.2031	.0756	.2016	.0786			.2231	.1078	.2396	.1902
.60					.1920	.0722	.1784	.0266	.1892	.0751	.1656	.0617	.0332	-.0235
.70	.0408	.0852	.1177	.0728	.1765	.0665	.1560	.0342	.0453	-.0162	.0134	-.0228	.0200	-.0175
.80	-.0266	.0286	.0035	-.0077			.0216	-.0025	.0095	-.0070	-.0042	-.0079	.0224	-.0165
.90	-.0244	-.0165	-.0209	-.0036	.0100	-.0036	.0078	.0015	.0021	-.0037	-.0098	-.0038		
.95	-.0213	-.0186	-.0145	-.0004			.0030	.0016	-.0017	-.0039	-.0097	-.0032	.0112	-.0143

TAIL 1

	Cp at y/b of													
	0.02		0.22		0.44		0.56		0.67		0.83		0.98	
x/c	U.S.	L.S.	U.S.	L.S.	U.S.	L.S.	U.S.	L.S.	U.S.	L.S.	U.S.	L.S.	U.S.	L.S.
.05	-.0287	.0456	.0003	.0858			-.0002	.1089			.0140	.0368	.0229	.1323
.10	.0017	.0308					-.0049	.1101	.1463	.0932			.0176	.1269
.15					-.0038	.0978	-.0036	.1075	.0017	.1122			.0097	.1134
.20	-.0034	.0257					-.0052	.1054	-.0071	.1106			.0041	.1034
.25	-.0250	-.0313	-.0347	.0440	-.0120	.0883	-.0053	.1013	-.0085	.1078	.0028	.1080	-.0000	.0953
.30			-.0407	-.0160			-.0070	.0909	-.0082	.1022	.0032	.1090	-.0037	.0947
.40									-.0404	.0153	-.0103	.0944	-.0081	.0946
.50					-.0351	-.0123	-.0427	-.0047	-.0454	.0008	-.0418	.0088	-.0187	.0635
.60	-.0035	-.0240	-.0362	-.0196			-.0507	-.0132	-.0455	-.0037	-.0520	-.0201	-.0633	-.0426
.70					-.0467	-.0218	-.0595	-.0401	.0498	-.0423	-.0618	-.0522	-.0581	-.0491
.80	-.0428	-.0540	-.0615	-.0523	-.0600	-.0551	.0648	-.0603			-.0618	-.0573		
.90	-.0535	-.0652	-.0667	-.0596	-.0618	-.0595	-.0630	-.0624	-.0594	-.0578	.0555	-.0528	-.0550	-.0483
.95			-.0677	-.0622	-.0609	-.0592	-.0629	-.0629	-.0616	-.0601	-.0612	-.0594	.0620	-.0563

TAIL 2

TABLE XXII. - PRESSURE COEFFICIENTS, $\phi = 90°$, $\delta_{1,3} = -15°$, $M = 1.60$

(a) $\alpha = -3.29°$

	Cp at y/b of													
	0.02		0.22		0.44		0.56		0.67		0.83		0.98	
x/c	U.S.	L.S.	U.S.	L.S.	U.S.	L.S.	U.S.	L.S.	U.S.	L.S.	U.S.	L.S.	U.S.	L.S.
.05	.5215	-.1191	1.0727	-.3154	1.0961	-.3736	1.1175	-.3835	1.0396	-.3714			[illegible]	[illegible]
.10	.5430	-.1034	.9533	-.2575	1.0049	-.3357			1.0454	-.3469	1.0475	[illegible]	[illegible]	[illegible]
.15	.6308	-.0935	.8906	-.2321	.9180	-.2846			.9692	-.3206			[illegible]	[illegible]
.20	.6549	-.0713	.7911	-.2249	.8235	-.2603	.8812	-.2732	.9345	-.3030	.9126	-.3015	[illegible]	[illegible]
.25					.7400	-.2491	.8050	-.2572	.8517	-.2761	.8812	-.2831	[illegible]	[illegible]
.30	.5851	-.1531							.7754	-.2513	.7992	-.2670	[illegible]	[illegible]
.40	.6227	-.2055	.6433	-.3352	.5826	-.3906	.5201	-.3895	.4832	-.3850	.6571	-.2563	[illegible]	[illegible]
.50			.6436	-.2960	.6413	-.3935	.6302	-.3995			.3919	-.2801	[illegible]	[illegible]
.60					.6032	-.3859	.5935	-.3943			.4328	-.3541	-.1350	-.4401
.70	.5116	-.1887	.5562	-.2366	.5374	-.3789	.4233	-.3945	.0224	-.3643	.0006	-.3551	-.1333	-.4262
.80	-.1508	-.3040	.0331	-.3709			.0278	-.3737	.0128	-.3689	-.0191	-.3620	-.1325	-.4386
.90	-.0179	-.3433	.0080	-.3344	.0319	-.3679	.0209	-.3533	.0085	-.3601	-.0195	-.3700	-.1293	-.4407
.95	-.0599	-.3156	-.0111	-.2490			.0121	-.3419	-.0017	-.3519	-.0333	-.3725	-.1374	-.4363

TAIL 1

	Cp at y/b of													
	0.02		0.22		0.44		0.56		0.67		0.83		0.98	
x/c	U.S.	L.S.	U.S.	L.S.	U.S.	L.S.	U.S.	L.S.	U.S.	L.S.	U.S.	L.S.	U.S.	L.S.
.05	.2319	.2300	.2433	.5144			.4777	.6554			.4540	.7201	.2979	.5506
.10	.2418	.2836					.5154	.5791	.5076	.6019			.4607	.5184
.15					.4244	.4899	.4757	.5349	.4699	.5774	.5086	.5564	.4321	.4471
.20	.2689	.3102					.4456	.5012	.4478	.5376			.4073	.3940
.25	.1291	.1029	.0403	.3220	.3814	.4319	.4200	.4638	.4389	.5024	.4443	.5351	.3762	.3475
.30			-.0531	-.0231			.3723	.4025	.4226	.4562	.4358	.4956	.3464	.3227
.40	.3294	.3948							-.0502	-.0273	.3647	.3506	.3054	.2722
.50					-.0266	.0582	-.0565	-.0040	-.0744	-.0428	-.0834	-.0724	.1965	.1356
.60	.3930	.4306	.3378	.3737			-.0354	.0248	-.0750	-.0363	-.1443	-.1448	-.1176	-.1006
.70					.2364	.1553	-.1575	-.1278	-.2195	-.1756	-.1405	-.1263	-.1256	-.1173
.80	.1082	.0818	-.0731	-.0311	-.0838	-.0146	-.1373	-.1030			-.1519	-.1415		
.90	.0877	.1001	-.0512	-.0575	-.1093	-.0304	-.1013	-.0120	-.1297	-.1550	-.1392	-.1647	-.0907	-.1091
.95			.0309	.0053	-.0401	-.0290	-.0489	-.0145	-.1087	-.1268	-.1302	-.1681	-.0902	-.1082

TAIL 2

TABLE XXII. - CONTINUED

(b) α = -1.30°

	Cp at y/b of													
	0.02		0.22		0.44		0.56		0.67		0.83		0.98	
x/c	U.S.	L.S.	U.S.	L.S.	U.S.	L.S.	U.S.	L.S.	U.S.	L.S.	U.S.	L.S.	U.S.	L.S.
.05	.4619	-.0244	.9983	-.2383	1.0528	-.3346	1.0738	-.3384	.9839	-.3264			.7244	-.3964
.10	.4813	-.0635	.8941	-.1841	.9572	-.2714			.9956	-.2873	.9916	-.3267	.8334	-.3616
.15	.5297	-.0613	.8258	-.1699	.8731	-.2199			.9140	-.2598			.7242	-.2877
.20	.5311	-.0456	.7384	-.1633	.7886	-.1997	.8292	-.2144	.8454	-.2381	.8474	-.2355	.6557	-.1915
.25					.6962	-.1946	.7501	-.1883	.7863	-.2064	.8163	-.2135	.5741	-.1475
.30	.4534	-.1363							.7012	-.1668	.7313	-.2020	.5037	-.1426
.40	.4952	-.1935	.3649	-.2898	.2823	-.3542	.2457	-.3548	.2300	-.3430	.6772	-.1957	.4104	-.1029
.50			.5236	-.2746	.5753	-.3572	.5801	-.3654			.1957	-.3575	.3000	-.1330
.60					.5577	-.3522	.5718	-.3634			.4035	-.3711	-.2753	-.4135
.70	.4292	-.1630	.5108	-.2081	.5082	-.3480	.4073	-.3735	.0142	-.3443	-.0124	-.3589	-.2093	-.4064
.80	-.1646	-.2810	.0136	-.3605			.0145	-.3671	-.0054	-.3503	-.0331	-.3638	-.1348	-.4263
.90	-.0529	-.3420	-.0170	-.3281	.0097	-.3580	.0027	-.3616	-.0130	-.3425	-.0382	-.3666	-.1393	-.4434
.95	-.0793	-.3178	-.0311	-.2355			-.0076	-.3474	-.0229	-.3444	-.0545	-.3663	-.1447	-.4350

TAIL 1

	Cp at y/b of													
	0.02		0.22		0.44		0.56		0.67		0.83		0.98	
x/c	U.S.	L.S.	U.S.	L.S.	U.S.	L.S.	U.S.	L.S.	U.S.	L.S.	U.S.	L.S.	U.S.	L.S.
.05	.2236	.2723	.2508	.5043			.4743	.6375			.4477	.7003	.3015	.3455
.10	.2465	.2763					.5072	.5547	.5075	.5853			.4553	.4338
.15					.4243	.4843	.4689	.5260	.4525	.5674	.4934	.5902	.4130	.4303
.20	.2573	.2904					.4377	.4985	.4411	.5304			.3949	.3758
.25	.1200	.1034	.0465	.3114	.3672	.4257	.4225	.4623	.4230	.4896	.4352	.5133	.3517	.3251
.30			-.0642	-.0398			.3748	.3896	.4135	.4412	.4230	.4809	.3253	.3011
.40	.2756	.3302							-.0545	-.0375	.3535	.3372	.2645	.2493
.50					-.0461	.0391	-.0640	-.0264	-.0752	-.0512	-.0924	-.0792	.1834	.1105
.60	.3213	.3565	.2760	.3216			-.0494	-.0013	-.0816	-.0446	-.1535	-.1672	-.1827	-.1536
.70					.1903	.1099	-.1763	-.1531	-.2912	-.2434	-.2262	-.1740	-.2163	-.1705
.80	.0422	.0230	-.1019	-.0754	-.0997	-.0417	-.1836	-.1532			-.2374	-.1914		
.90	.0518	.0655	-.1111	-.1037	-.1334	-.0852	-.1371	-.0676	-.2035	-.1797	-.2007	-.2096	-.1963	-.1801
.95			-.0238	-.0428	-.1151	-.0864	-.1151	-.0714	-.1905	-.1780	-.1793	-.2043	-.1994	-.1765

TAIL 2

TABLE XXII. - CONTINUED
(c) α = 0.70°

	Cp at y/b of													
	0.02		0.22		0.44		0.56		0.67		0.83		0.98	
x/c	U.S.	L.S.	U.S.	L.S.	U.S.	L.S.	U.S.	L.S.	U.S.	L.S.	U.S.	L.S.	U.S.	L.S.
.05	.4494	.0383	.9155	-.1538	.9976	-.2752	1.0309	-.2712	.9338	-.2692			.6448	-.3683
.10	.4462	-.0210	.8142	-.1112	.8987	-.1936			.9471	-.2158	.3565	-.3662	.7333	-.3135
.15	.4761	-.0281	.7531	-.1018	.8171	-.1395			.8572	-.1974			.6931	-.2124
.20	.4563	-.0144	.6759	-.0863	.7368	-.1097	.7920	-.1575	.8012	-.1597	.8107	-.1679	.6201	-.1103
.25					.6543	-.1046	.7131	-.1152	.7455	-.1257	.7856	-.1475	.5365	-.0564
.30	.3223	-.1137							.6640	-.1179	.7001	-.1323	.4660	-.0816
.40	.3778	-.1610	.2598	-.2526	.2230	-.3128	.1614	-.3139	.0957	-.3040	.5525	-.1329	.3808	-.0725
.50			.3812	-.2464	.3125	-.3207	.2850	-.3255			.3330	-.3233	.2707	-.0877
.60					.4433	-.3150	.4093	-.3335			.1067	-.3483	-.3134	-.3913
.70	.3203	-.1449	.4004	-.1553	.4550	-.3070	.3570	-.3575	-.0188	-.3328	-.1220	-.3439	-.3046	-.3954
.80	-.1876	-.2736	-.0199	-.3395			-.0087	-.3622	-.0271	-.3351	-.1096	-.3515	-.2630	-.4467
.90	-.1107	-.3319	-.0479	-.3206	-.0152	-.3527	-.0241	-.3463	-.0326	-.3337	-.0896	-.3675	-.2159	-.4549
.95	-.1112	-.3202	-.0592	-.2334			-.0341	-.3321	-.0425	-.3320	-.0943	-.3565	-.2125	-.4571

TAIL 1

	Cp at y/b of													
	0.02		0.22		0.44		0.56		0.67		0.83		0.98	
x/c	U.S.	L.S.	U.S.	L.S.	U.S.	L.S.	U.S.	L.S.	U.S.	L.S.	U.S.	L.S.	U.S.	L.S.
.05	.2202	.2517	.2996	.5013			.4837	.6277			.4530	.6853	.3177	.5392
.10	.2345	.2578					.4994	.5604	.5027	.5674			.4381	.4839
.15					.4238	.4743	.4559	.5215	.4334	.5489	.4986	.5838	.4138	.4131
.20	.2245	.2540					.4213	.4833	.4296	.5087			.3794	.3544
.25	.1294	.1209	.0379	.2913	.3729	.4107	.4052	.4468	.4093	.4659	.4305	.5043	.3372	.3063
.30			-.0781	-.0534			.3622	.3683	.3938	.4159	.4158	.4683	.3005	.2785
.40	.2381	.2796							-.0644	-.0501	.3362	.3300	.2587	.2276
.50					-.0592	.0163	-.0745	-.0388	-.0835	-.0600	-.1039	-.0805	.1733	.0946
.50	.2531	.2866	.2089	.2550			-.0643	-.0200	-.0833	-.0526	-.1564	-.1735	-.2278	-.2013
.70					.1352	.0881	-.1914	-.1744	-.3014	-.2557	-.2579	-.2093	-.2409	-.2153
.80	-.0065	-.0105	-.1338	-.1081	-.1259	-.0702	-.2108	-.1741			-.2583	-.2197		
.90	.0200	.0344	-.1439	-.1480	-.1544	-.1100	-.1604	-.0971	-.2413	-.2059	-.2237	-.2257	-.2314	-.2170
.95			-.0679	-.0871	-.1435	-.1136	-.1480	-.1000	-.2254	-.1938	-.1990	-.2153	-.2342	-.2068

TAIL 2

TABLE XXII. - CONTINUED

(d) α = 2.71°

	Cp at y/b of													
	0.02		0.22		0.44		0.56		0.67		0.83		0.98	
x/c	U.S.	L.S.	U.S.	L.S.	U.S.	L.S.	U.S.	L.S.	U.S.	L.S.	U.S.	L.S.	U.S.	L.S.
.05	.4548	.1095	.8364	-.0603	.9418	-.1967	.9751	-.1877	.8874	-.2043			.6126	-.3195
.10	.4294	.0320	.7398	-.0385	.8445	-.0964			.9993	-.1384	.9085	-.1310	.7634	-.2743
.15	.4457	.0123	.6836	-.0136	.7681	-.0332			.8224	-.1023			.6558	-.1553
.20	.4303	.0205	.6154	.0056	.6947	-.0251	.7421	-.0465	.7533	-.0584	.7670	-.0832	.5873	-.0254
.25					.5202	-.0270	.6695	-.0336	.7073	-.0473	.7446	-.0575	.5066	-.0152
.30	.1557	-.1011							.6312	-.0439	.6626	-.0613	.4353	-.0257
.40	.2811	-.1293	.1751	-.2192	.1450	.2739	.1051	-.2680	.0653	-.2634	.5235	-.0652	.3535	-.0148
.50			.2568	-.2154	.2198	-.2736	.1981	-.2820			.0237	-.2837	.2515	-.0357
.60					.2717	-.2664	.2556	-.2824			.0502	-.3131	-.3214	-.3783
.70	.2214	-.1200	.3045	-.1154	.3224	-.2625	.2270	-.3224	-.1107	-.3453	-.1812	-.3480	-.2994	-.3738
.80	-.2110	-.2737	-.0710	-.3204			-.0785	-.3599	-.1091	-.3429	-.1806	-.3604	-.2801	-.4477
.90	-.1494	-.2914	-.0982	-.3310	-.0588	-.3344	-.0758	-.3344	-.1075	-.3424	-.1753	-.3659	-.2484	-.4417
.95	-.1491	-.3289	-.0981	-.2793			-.0783	-.3109	-.1135	-.3335	-.1814	-.3458	-.2458	-.4411

TAIL 1

	Cp at y/b of													
	0.02		0.22		0.44		0.56		0.67		0.83		0.98	
x/c	U.S.	L.S.	U.S.	L.S.	U.S.	L.S.	U.S.	L.S.	U.S.	L.S.	U.S.	L.S.	U.S.	L.S.
.05	.2073	.2289	.3186	.4893			.4929	.5117			.4424	.6526	.3354	.5342
.10	.2151	.2315					.4756	.5460	.4957	.5421			.4130	.4706
.15					.4016	.4654	.4333	.5016	.4164	.5231	.4833	.5583	.3506	.4037
.20	.1927	.2160					.3973	.4625	.4174	.4933			.3449	.3429
.25	.1046	.1013	.0257	.2741	.3491	.3930	.3830	.4208	.3872	.4424	.4129	.4789	.3061	.2963
.30			-.1007	-.0636			.3508	.3412	.3783	.3957	.3975	.4522	.2823	.2557
.40	.1966	.2303							-.0793	-.0533	.3174	.3204	.2544	.2057
.50					-.0683	-.0000	-.0863	-.0498	-.0947	-.0633	-.1104	-.0861	.1501	.0613
.60	.2023	.2304	.1651	.2092			-.0785	-.0312	-.0970	-.0564	-.1745	-.1786	-.2725	-.2280
.70					.1057	.0584	-.2048	-.1838	-.3061	-.2637	-.2836	-.2346	-.2733	-.2384
.80	-.0548	-.0523	-.1534	-.1412	-.1502	-.0961	-.2271	-.1926			-.2735	-.2394		
.90	-.0133	-.0027	-.1743	-.1751	-.1755	-.1346	-.1850	-.1255	-.2551	-.2130	-.2527	-.2432	-.2472	-.2411
.95			-.1055	-.1185	-.1723	-.1387	-.1684	-.1233	-.2350	-.2143	-.2269	-.2377	-.2396	-.2272

TAIL 2

TABLE XXII. - CONTINUED

(e) α = 4.73°

	Cp at y/b of													
	0.02		0.22		0.44		0.56		0.67		0.83		0.98	
x/c	U.S.	L.S.	U.S.	L.S.	U.S.	L.S.	U.S.	L.S.	U.S.	L.S.	U.S.	L.S.	U.S.	L.S.
.05	.4307	.1409	.7585	.0380	.8846	-.0945	.9115	-.0980	.8275	-.1294			.8731	-.2781
.10	.4043	.0934	.6723	.0531	.7820	.0284			.8433	-.0112	.8565	-.0933	.7208	-.1900
.15	.4160	.0671	.6253	.0851	.7137	.0531			.7703	.0123			[illegible]	[illegible]
.20	.4053	.0654	.5698	.0913	.6470	.0660	.6833	.0375	.7154	.0275	.7208	.0035	.5584	.0214
.25					.5744	.0530	.6255	.0541	.5569	.0370	.7000	.0189	[illegible]	[illegible]
.30	.1019	-.0693							.5357	.0447	.6243	.0231	.4085	.0417
.40	.2010	-.0792	.1046	-.1731	.0915	-.2202	.0585	-.2213	.3418	-.2103	.4941	.0149	[illegible]	[illegible]
.50			.1666	-.1758	.1382	-.2304	.1327	-.2356			.0007	-.2356	.2311	.0356
.60					.1744	-.2265	.1724	-.2412			.0108	-.2708	-.3250	-.3495
.70	.1457	-.0938	.2386	-.0818	.2074	-.2153	.1177	-.2842	-.1562	-.3731	-.2188	-.3480	-.2925	-.3389
.80	-.2363	-.2602	-.1248	-.3019			-.1383	-.3474	-.1632	-.3455	-.2224	-.3495	-.2741	-.4113
.90	-.1738	-.2552	-.1456	-.3254	-.1129	-.3223	-.1395	-.3271	-.1699	-.3473	-.2203	-.3499	-.2578	-.4152
.95	-.1683	-.3086	-.1452	-.2866			-.1427	-.3015	-.1763	-.3383	-.2267	-.3338	-.2609	-.4004

TAIL 1

	Cp at y/b of													
	0.02		0.22		0.44		0.56		0.67		0.83		0.98	
x/c	U.S.	L.S.	U.S.	L.S.	U.S.	L.S.	U.S.	L.S.	U.S.	L.S.	U.S.	L.S.	U.S.	L.S.
.05	.2685	.2995	.3850	.5277			.4743	.5976			.4373	.6237	.3371	.5302
.10	.2516	.2740					.4645	.5262	.4866	.5205			.4021	.4672
.15					.3907	.4524	.4261	.4773	.4172	.5015	.4694	.5357	.3707	.3956
.20	.1827	.2126					.3948	.4367	.4106	.4657			.3193	.3296
.25	-.0184	-.0156	.0209	.2577	.3447	.3702	.3717	.3969	.3719	.4309	.3971	.4550	.2965	.2769
.30			-.1063	-.0853			.3355	.3259	.3524	.3853	.3797	.4362	.2778	.2427
.40	.0992	.1663							-.0936	-.0629	.2934	.3052	.2383	.1817
.50					-.0837	-.0239	-.0954	-.0534	-.1037	-.0673	-.1096	-.0927	.1259	.0385
.60	.1680	.2090	.1512	.1780			-.0936	-.0442	-.1032	-.0627	-.1791	-.1807	-.3148	-.2707
.70					.0611	.0038	-.2239	-.2027	-.3094	-.2751	-.3302	-.3102	-.3283	-.2706
.80	-.0846	-.1360	-.1627	-.1440	-.1659	-.1243	-.2623	-.2244			-.2979	-.2776		
.90	-.1015	-.0947	-.2040	-.1839	-.1852	-.1402	-.2139	-.1653	-.2700	-.2353	-.2862	-.2707	-.2557	-.2601
.95			-.1939	-.1802	-.1840	-.1484	-.1739	-.1331	-.2472	-.2313	-.2736	-.2652	-.2508	-.2401

TAIL 2

TABLE XXII. - CONTINUED
(l) α = 6.70°

	Cp at y/b of													
	0.02		0.22		0.44		0.56		0.67		0.83		0.98	
x/c	U.S.	L.S.	U.S.	L.S.	U.S.	L.S.	U.S.	L.S.	U.S.	L.S.	U.S.	L.S.	U.S.	L.S.
.05	.3358	.1624	.6403	.1267	.7936	.0365	.8278	.0394	.7642	-.0110			.5169	-.2301
.10	.3278	.1374	.5736	.1543	.6981	.1604			.7705	.1042	.7989	.0153	.6763	-.0653
.15	.3454	.1189	.5454	.1697	.6418	.1715			.7066	.1266			.5830	.0523
.20	.3415	.1226	.5029	.1580	.5903	.1651	.6323	.1539	.6602	.1443	.6708	.1121	.5122	.1080
.25					.5254	.1615	.5753	.1533	.6136	.1585	.6532	.1237	.4363	.1242
.30	.0585	-.0265							.5534	.1612	.5857	.1311	.3763	.1133
.40	.1534	-.0317	.0426	-.1380	.0452	-.1861	.0354	-.1744	.0161	-.1658	.4653	.1297	.2946	.1200
.50			.0300	-.1012	.0737	-.1953	.0730	-.1945			-.0183	-.1762	.2078	.0968
.60					.1011	-.1833	.1018	-.2027			-.0231	-.2230	-.3209	-.3190
.70	.1133	-.0628	.1772	-.0538	.1202	-.1466	.0595	-.2577	-.1969	-.3727	-.2505	-.3533	-.2928	-.2923
.80	-.2565	-.2432	-.1551	-.2825			-.1890	-.3324	-.2102	-.3336	-.2575	-.3314	-.2828	-.3251
.90	-.1726	-.2392	-.1757	-.3100	-.1583	-.3014	-.1873	-.3205	-.2131	-.3258	-.2565	-.3271	-.2335	-.3759
.95	-.1763	-.2821	-.1770	-.2787			-.1862	-.2995	-.2202	-.3105	-.2627	-.3163	-.2353	-.3563

TAIL 1

	Cp at y/b of													
	0.02		0.22		0.44		0.56		0.67		0.83		0.98	
x/c	U.S.	L.S.	U.S.	L.S.	U.S.	L.S.	U.S.	L.S.	U.S.	L.S.	U.S.	L.S.	U.S.	L.S.
.05	.2937	.3419	.4248	.5622			.4845	.5735			.4161	.6067	.3296	.5220
.10	.3661	.3898					.4551	.5091	.4705	.5116			.3850	.4595
.15					.3872	.4376	.4112	.4668	.4007	.4940	.4498	.5162	.3482	.3816
.20	.1755	.2048					.3733	.4343	.3840	.4597			.2959	.3149
.25	-.0712	-.0681	.0108	.2341	.3265	.3681	.3485	.3971	.3554	.4200	.3829	.4430	.2917	.2622
.30			-.1184	-.1001			.3158	.3241	.3317	.3725	.3644	.4123	.2641	.2265
.40	-.0098	.0035							-.1012	-.0721	.2732	.2878	.2148	.1527
.50					-.0920	-.0531	-.0990	-.0584	-.1092	-.0740	-.1126	-.0978	.1006	.0163
.60	.1526	.1810	.1653	.1915			-.1003	-.0591	-.1070	-.0671	-.1842	-.1813	-.3234	-.3016
.70					-.0031	-.0362	-.2342	-.2119	-.3113	-.2798	-.3387	-.3225	-.3385	-.2940
.80	-.1183	-.1699	-.1613	-.1382	-.1760	-.1515	-.2840	-.2492			-.3145	-.3080		
.90	-.1372	-.1303	-.2012	-.1946	-.1879	-.1365	-.2494	-.2079	-.2768	-.2406	-.2990	-.2840	-.2793	-.2678
.95			-.2226	-.2125	-.1892	-.1394	-.1981	-.1661	-.2660	-.2383	-.2893	-.2802	-.2644	-.2463

TAIL 2

TABLE XXII$_1$ - CONTINUED
(g) α = 8.70°

	Cp at y/b of													
	0.02		0.22		0.44		0.56		0.67		0.83		0.98	
x/c	U.S.	L.S.	U.S.	L.S.	U.S.	L.S.	U.S.	L.S.	U.S.	L.S.	U.S.	L.S.	U.S.	L.S.
.05	.2432	.1830	.5055	.2258	.6632	.2131	.7287	.2112	.6862	.1567			.4887	-.1607
.10	.2473	.1753	.4427	.2542	.5723	.2857			.6602	.2817	.7276	.1604	.5041	.1369
.15	.2649	.1703	.4273	.2364	.5300	.2724			.6077	.2735			.5223	.1691
.20	.2602	.1863	.4091	.2148	.4933	.2547	.5730	.2563	.5725	.2924	.6146	.2235	.4507	.2217
.25					.4792	.2289	.5179	.2527	.5333	.2638	.6112	.2815	.3772	.2308
.30	.0209	.0214							.4846	.2456	.5502	.2437	.3193	.2194
.40	.0383	.0347	-.0127	-.0923	.0120	-.1538	.0028	-.1394	-.0155	-.1332	.4411	.2417	.2673	.2073
.50			.0217	.0489	.0237	-.1437	.0193	-.1609			-.0349	-.1421	.1812	.1522
.60					.0391	-.1147	.0473	-.1666			-.0545	-.1917	-.3101	-.3103
.70	.1025	-.0310	.1299	-.0207	.0526	-.0564	-.0022	-.2180	-.2266	-.3525	-.2766	-.3508	-.3073	-.2515
.80	-.2764	-.2229	-.1713	-.2587			-.2320	-.3225	-.2420	-.3228	-.2874	-.3184	-.2060	-.2624
.90	-.1626	-.2256	-.1384	-.2899	-.1876	-.2760	-.2327	-.2951	-.2462	-.3077	-.2874	-.3153	-.2319	-.3563
.95	-.1777	-.2581	-.2043	-.2715			-.2273	-.2716	-.2528	-.2933	-.2869	-.3062	-.2432	-.3613

TAIL 1

	Cp at y/b of													
	0.02		0.22		0.44		0.56		0.67		0.83		0.98	
x/c	U.S.	L.S.	U.S.	L.S.	U.S.	L.S.	U.S.	L.S.	U.S.	L.S.	U.S.	L.S.	U.S.	L.S.
.05	.2200	.2910	.3657	.5810			.4633	.6089			.3964	.6158	.3132	.5106
.10	.2304	.2705					.4653	.5402	.4672	.5031			.3732	.4533
.15					.4056	.4513	.4225	.4901	.4052	.4828	.4358	.5288	.3253	.3727
.20	.2308	.3207					.3835	.4470	.3820	.4458			.2865	.3035
.25	-.0471	-.0222	.0035	.2325	.3420	.3680	.3556	.4040	.3563	.4052	.3753	.4473	.2878	.2463
.30			-.1357	-.1123			.3190	.3263	.3276	.3545	.3533	.4154	.2552	.2089
.40	-.0343	-.0536							-.1036	-.0808	.2610	.2651	.2015	.1378
.50					-.0854	-.0671	-.0898	-.0512	-.1097	-.0800	-.1098	-.0353	.0854	-.0082
.60	.1085	.1187	.0461	.0108			-.0929	-.0578	-.1033	-.0700	-.1849	-.1783	-.3410	-.3171
.70					-.1037	-.0883	-.2315	-.2236	-.3066	-.2801	-.3372	-.3159	-.3431	-.3099
.80	-.1226	-.1611	-.1767	-.1220	-.2412	-.2251	-.3102	-.2840			-.3225	-.3144		
.90	-.1561	-.1470	-.2026	-.1903	-.1957	-.1677	-.2730	-.2481	-.2827	-.2503	-.2970	-.2842	-.2896	-.2805
.95			-.2176	-.2169	-.1894	-.1404	-.2313	-.2365	-.2743	-.2400	-.2910	-.2791	-.2654	-.2536

TAIL 2

TABLE XXII. - CONTINUED

(h) α = 10.69°

	Cp at y/b of													
	0.02		0.22		0.44		0.56		0.67		0.83		0.98	
x/c	U.S.	L.S.	U.S.	L.S.	U.S.	L.S.	U.S.	L.S.	U.S.	L.S.	U.S.	L.S.	U.S.	L.S.
.05	.1532	.2218	.3732	.3403	.5243	.4229	.5916	.4434	.6095	.4390			.3662	.2737
.10	.1724	.2249	.3388	.3323	.4577	.3895			.5522	.4120	.6197	.4491	.5439	.3505
.15	.1703	.2241	.3130	.2973	.4293	.3514			.4918	.3824			.4614	.3460
.20	.1523	.2437	.3053	.2728	.4008	.3260	.4640	.3485	.4882	.3603	.5254	.3899	.4004	.3232
.25					.3767	.2947	.4291	.3271	.4705	.3421	.5303	.3809	.3370	.2805
.30	-.0630	.0228							.4356	.3221	.4881	.3575	.2973	.2461
.40	-.0034	.0308	-.0670	-.0336	-.0373	-.1168	-.0379	-.1103	-.0238	-.0922	.4022	.3006	.2533	.2177
.50			-.0337	.0856	-.0400	-.0802	-.0297	-.1230			-.0548	-.1170	.1956	.1490
.60					-.0335	-.0483	-.0135	-.1002			-.0852	-.1724	-.2993	-.3090
.70	.0752	-.0011	.1110	.0143	-.0172	.0012	-.0531	-.1479	-.2642	-.3218	-.2995	-.3163	-.2777	-.2671
.80	-.2662	-.1373	-.1850	-.2400			-.2687	-.2724	-.2779	-.3196	-.3107	-.2938	-.2512	-.2841
.90	-.1540	-.2103	-.2200	-.2742	-.2215	-.2549	-.2624	-.2527	-.2793	-.2891	-.3018	-.3053	-.2575	-.3425
.95	-.1625	-.2327	-.2235	-.2641			-.2399	-.2487	-.2620	-.2786	-.2879	-.3042	-.2569	-.3350

TAIL 1

	Cp at y/b of													
	0.02		0.22		0.44		0.56		0.67		0.83		0.98	
x/c	U.S.	L.S.	U.S.	L.S.	U.S.	L.S.	U.S.	L.S.	U.S.	L.S.	U.S.	L.S.	U.S.	L.S.
.05	.2118	.2646	.3662	.5494			.4664	.5104			.3742	.5880	.3076	.4334
.10	.2027	.2523					.4845	.5424	.4693	.5100			.3639	.4475
.15					.4270	.4830	.4376	.4928	.4094	.4912	.4207	.5006	.3105	.3650
.20	.1623	.2453					.3938	.4499	.3825	.4592			.2880	.3003
.25	-.0525	.0102	-.0367	.1907	.3517	.3904	.3648	.4106	.3564	.4193	.3675	.4247	.2832	.2441
.30			-.1750	-.1418			.3305	.3367	.3270	.3711	.3500	.3920	.2463	.2070
.40	-.0158	-.0376							-.1014	-.0696	.2552	.2652	.1900	.1333
.50					-.0860	-.0701	-.0779	-.0408	-.1011	-.0611	-.1120	-.1023	.0700	-.0131
.60	.0254	-.0083	-.1173	-.1137			-.0887	-.0551	-.0302	-.0516	-.1842	-.1784	-.3498	-.3268
.70					-.1212	-.0954	-.2318	-.2219	-.2987	-.2730	-.3331	-.3124	-.3404	-.3208
.80	-.1410	-.1560	-.1975	-.1753	-.3076	-.2796	-.3158	-.2958			-.3262	-.3134		
.90	-.1697	-.1549	-.2219	-.1883	-.2646	-.2435	-.2868	-.2564	-.2974	-.2663	-.2957	-.2936	-.2988	-.2763
.95			-.2356	-.1850	-.2300	-.2132	-.2671	-.2519	-.2831	-.2566	-.2898	-.2715	-.2701	-.2468

TAIL 2

TABLE XXII. - CONTINUED
(i) α = 12.70°

	Cp at y/b of													
	0.02		0.22		0.44		0.56		0.67		0.83		0.98	
x/c	U.S.	L.S.	U.S.	L.S.	U.S.	L.S.	U.S.	L.S.	U.S.	L.S.	U.S.	L.S.	U.S.	L.S.
.05	.0818	.2493	.2414	.4550	.3235	.5506	.4151	.5632	.4638	.6070			.0780	.4164
.10	.0961	.2669	.2270	.3939	.3539	.4762			.4499	.5330	.4935	.5540	.5072	.4987
.15	.0726	.2785	.2170	.3588	.3191	.4282			.3687	.4914			.3857	.4046
.20	.0287	.3180	.1991	.3423	.2955	.3998	.3479	.4208	.3816	.4623	.4193	.4333	.3381	.3453
.25					.2737	.3632	.3272	.4048	.3737	.4345	.4178	.4637	.2863	.2995
.30	-.1486	.1433							.3500	.4039	.3972	.4343	.2507	.2620
.40	-.0351	.1289	-.1190	.0771	-.0921	-.0691	-.0800	-.0677	-.0648	-.0555	.3451	.3447	.2318	.2233
.50			-.0312	.1226	-.0941	-.0137	-.0786	-.0672			-.0767	-.0937	.1798	.1507
.60					-.0892	.0223	-.0701	-.0390			-.1155	-.1498	-.2324	-.3032
.70	.0349	.0312	.0577	.0507	-.0731	.1063	-.1114	-.0810	-.2962	-.2973	-.3208	-.3117	-.2746	-.3101
.80	-.2203	-.1777	-.2038	-.2221			-.3034	-.2215	-.3081	-.2916	-.3002	-.2846	-.2553	-.2573
.90	-.1480	-.2100	-.2485	-.2532	-.2521	-.2364	-.2721	-.2243	-.2777	-.2682	-.2801	-.2856	-.2635	-.2873
.95	-.1628	-.2145	-.2554	-.2506			-.2617	-.2310	-.2644	-.2587	-.2810	-.2846	-.2646	-.2778

TAIL 1

	Cp at y/b of													
	0.02		0.22		0.44		0.56		0.67		0.83		0.98	
x/c	U.S.	L.S.	U.S.	L.S.	U.S.	L.S.	U.S.	L.S.	U.S.	L.S.	U.S.	L.S.	U.S.	L.S.
.05	.1939	.2719	.3200	.5145			.4913	.6627			.3864	.5871	.3216	.4962
.10	.1831	.2615					.5455	.5904	.5005	.5359			.3756	.4513
.15					.4672	.5067	.4840	.5303	.4365	.5159	.4233	.5015	.3049	.3675
.20	.1398	.2022					.4231	.4786	.4166	.4774			.3109	.3054
.25	-.0807	-.0363	-.0805	.1200	.3603	.3851	.3962	.4322	.3796	.4363	.3853	.4344	.2948	.2471
.30			-.2165	-.1888			.3600	.3562	.3532	.3630	.3677	.4033	.2503	.2104
.40	-.0379	-.0327							-.0842	-.0558	.2676	.2757	.1836	.1351
.50					-.1085	-.0952	-.0734	-.0449	-.0773	-.0455	-.1027	-.0860	.0644	-.0169
.60	-.0306	-.0837	-.1831	-.1771			-.0880	-.0651	-.0730	-.0412	-.1697	-.1585	-.3502	-.3341
.70					-.1510	-.1338	-.2315	-.2301	-.2958	-.2697	-.3198	-.2933	-.3367	-.3327
.80	-.1734	-.1993	-.2111	-.2297	-.3371	-.3234	-.3243	-.3064			-.3250	-.3048		
.90	-.1689	-.1638	-.2351	-.2259	-.3061	-.2822	-.3079	-.2930	-.2913	-.2502	-.2957	-.2834	-.2965	-.2719
.95			-.2555	-.2343	-.2885	-.2735	-.2894	-.2652	-.2847	-.2799	-.2812	-.2653	-.2590	-.2339

TAIL 2

TABLE XXII. - CONTINUED

(j) α = 16.71°

	Cp at y/b of													
	0.02		0.22		0.44		0.56		0.67		0.83		0.98	
x/c	U.S.	L.S.	U.S.	L.S.	U.S.	L.S.	U.S.	L.S.	U.S.	L.S.	U.S.	L.S.	U.S.	L.S.
.05	-.0580	.3097	.0098	.5836	.0001	.7328	-.0039	.7664	-.0031	.8005			-.2318	.7563
.10	-.0463	.3653	.0164	.5273	.1136	.6562			.1092	.7016	.1137	.7152	-.0131	.6590
.15	-.1026	.4187	.0331	.5227	.1136	.6052			.1204	.6412			.0905	.5183
.20	-.1911	.4643	.0423	.5021	.1018	.5517	.1602	.5705	.1407	.5939	.1618	.6251	.1384	.4416
.25					.0910	.4793	.1330	.5154	.1584	.5472	.1763	.5932	.1517	.3680
.30	-.2660	.2563							.1517	.4931	.1738	.5318	.1513	.3133
.40	-.0594	.2090	-.2116	.2662	-.1837	.0206	-.1757	-.0259	-.1541	-.0369	.1625	.4042	.1326	.2363
.50			-.1822	.1830	-.1878	.0918	-.1856	.0383			-.1483	-.0661	.1044	.1239
.60					-.1876	.2062	-.1620	.1225			-.1891	-.1008	-.3230	-.3314
.70	.0102	.0912	-.0273	.1277	-.1829	.1596	-.2101	.0799	-.3559	-.1938	-.3528	-.2990	-.2675	-.3298
.80	-.2162	-.1436	-.2568	-.1923			-.3566	-.1584	-.3520	-.1673	-.3230	-.3006	-.2724	-.2838
.90	-.1752	-.2144	-.2878	-.2192	-.3075	-.1959	-.3235	-.1873	-.3228	-.1759	-.3195	-.2820	-.3234	-.2596
.95	-.1862	-.2091	-.2744	-.2304			-.2886	-.1944	-.3112	-.1845	-.3118	-.2768	-.3498	-.2715

TAIL 1

	Cp at y/b of													
	0.02		0.22		0.44		0.56		0.67		0.83		0.98	
x/c	U.S.	L.S.	U.S.	L.S.	U.S.	L.S.	U.S.	L.S.	U.S.	L.S.	U.S.	L.S.	U.S.	L.S.
.05	.1558	.2238	.2749	.4089			.4464	.6468			.4989	.7014	.3726	.5469
.10	.1495	.2082					.5446	.6378	.5703	.6594			.4146	.4942
.15					.4054	.4463	.5283	.5546	.5643	.6118	.5062	.5610	.3539	.4107
.20	.1092	.1605					.4415	.4467	.5136	.5353			.3436	.3451
.25	-.1072	-.0742	-.0404	.2019	.2406	.2145	.3611	.3548	.4590	.4723	.4556	.5121	.3326	.2892
.30			-.1719	-.1408			.2914	.2678	.4195	.4146	.4266	.4768	.2956	.2569
.40	-.0668	-.0364							-.0629	-.0521	.3380	.3402	.2407	.1886
.50					-.2692	-.2652	-.1695	-.1657	-.0994	-.0838	-.0887	-.0613	.1178	.0344
.60	-.0460	-.0950	-.2032	-.1934			-.2023	-.1977	-.1184	-.0996	-.1520	-.1528	-.3364	-.3188
.70					-.3224	-.3117	-.3223	-.3256	-.3272	-.3109	-.3188	-.3018	-.3388	-.3206
.80	-.2772	-.3167	-.3081	-.3061	-.3979	-.3955	-.3942	-.3850			-.3306	-.3165		
.90	-.2798	-.2970	-.2982	-.3045	-.3866	-.3825	-.3881	-.3856	-.3523	-.3413	-.2963	-.3051	-.2530	-.2196
.95			-.2832	-.2788	-.3719	-.3725	-.3742	-.3775	-.3408	-.3403	-.2917	-.2904	-.2285	-.2018

TAIL 2

TABLE XXII. - CONCLUDED

(k) α = 18.70°

	Cp at y/b of													
	0.02		0.22		0.44		0.56		0.67		0.83		0.98	
x/c	U.S.	L.S.	U.S.	L.S.	U.S.	L.S.	U.S.	L.S.	U.S.	L.S.	U.S.	L.S.	U.S.	L.S.
.05	-.1860	.3574	-.1795	.6417	-.2122	.7905	-.2342	.8202	-.2245	.8562			-.3069	.8055
.10	-.1990	.4393	-.1593	.6204	-.1487	.7059			-.1507	.7588	-.1653	.7670	-.2576	.6912
.15	-.3205	.4936	-.1429	.6060	-.1059	.6430			-.1129	.6926			-.1402	.5535
.20	-.3308	.5243	-.1157	.5567	-.0986	.5809	-.0528	.6228	-.0945	.6391	-.0805	.6641	-.0552	.4749
.25					-.0938	.5099	-.0769	.5529	-.0710	.5837	-.0682	.6263	-.0156	.3980
.30	-.3345	.3002							-.0639	.5197	-.0674	.5580	-.0122	.3415
.40	-.0891	.2350	-.2734	.3071	-.2933	.0844	-.2788	.0237	-.2709	-.0237	-.0653	.4202	-.0044	.2533
.50			-.2256	.2050	-.2906	.2684	-.2941	.0920			-.2621	-.0501	-.0158	.1358
.60					-.2743	.2358	-.2686	.2809			-.2880	-.0706	-.3649	-.3364
.70	-.0430	.1180	-.0864	.1699	-.2553	.1937	-.3149	.1222	-.3837	-.1143	-.3676	-.2668	-.3431	-.3142
.80	-.2450	-.1241	-.2944	-.1721			-.3662	-.1433	-.3606	-.1422	-.3668	-.2478	-.3770	-.3017
.90	-.1897	-.2078	-.3176	-.1997	-.3446	-.1663	-.3554	-.1776	-.3518	-.1571	-.3592	-.2270	-.3740	-.2736
.95	-.1969	-.2026	-.2878	-.2142			-.3378	-.1834	-.3435	-.1681	-.3455	-.2103	-.3594	-.2737

TAIL 1

	Cp at y/b of													
	0.02		0.22		0.44		0.56		0.67		0.83		0.98	
x/c	U.S.	L.S.	U.S.	L.S.	U.S.	L.S.	U.S.	L.S.	U.S.	L.S.	U.S.	L.S.	U.S.	L.S.
.05	.1392	.2054	.2763	.3438			.3402	.2899			.5233	.7085	.3485	.6216
.10	.1374	.1965					.3756	.4146	.4772	.5032			.4534	.5935
.15					.2757	.3510	.3812	.4454	.5226	.5300	.5548	.6366	.4356	.5202
.20	.0915	.1404					.3497	.4069	.4839	.4954			.4021	.4592
.25	-.1115	-.0976	-.0654	.1042	.1608	.2074	.2877	.3220	.4325	.4277	.4859	.5471	.3695	.4057
.30			-.1929	-.1956			.2296	.2179	.3813	.3607	.4580	.4891	.3354	.3723
.40	-.0764	-.0713							-.0873	-.1148	.3634	.3298	.2882	.3046
.50					-.2976	-.2808	-.2208	-.2260	-.1364	.1786	-.0787	-.0958	.1732	.1487
.60	-.0825	.1366	-.2120	-.2117			.2571	-.2758	-.1648	-.2188	-.1612	-.2075	-.3071	-.2593
.70					-.3556	-.3572	-.3610	-.3868	-.3538	-.3844	-.3289	-.3520	-.3212	-.2200
.80	-.2898	-.3227	-.3132	-.3352	-.4332	-.4457	-.4222	-.4372			-.3427	-.3688		
.90	-.2911	-.3071	-.3195	-.3478	-.4192	-.4304	-.4253	-.4411	-.3736	-.4081	-.3212	-.3672	-.2602	-.2907
.35			-.3204	-.3425	-.4094	-.4277	-.4167	-.4327	-.3780	-.4082	-.3115	-.3555	-.2568	-.2962

TAIL 2

TABLE XXIII. - PRESSURE COEFFICIENTS, $\phi = 90°$, $\delta_{1,3} = -15°$, $M = 2.36$

(a) $\alpha = -4.05°$

	Cp at y/b of													
	0.02		0.22		0.44		0.56		0.67		0.83		0.98	
x/c	U.S.	L.S.	U.S.	L.S.	U.S.	L.S.	U.S.	L.S.	U.S.	L.S.	U.S.	L.S.	U.S.	L.S.
.05			1.0063	-.0911	1.0862	-.0994	1.0991	-.0976						
.10	.3626	-.0480	.8962	-.0914	.9878	-.0833			1.0373	-.0774			[illegible]	[illegible]
.15	.4093	-.0578	.8344	-.0957	.9247	-.0839			.9649	-.0826			[illegible]	-.0754
.20	.4701	-.0594	.7913	-.0984	.9651	-.0860	.8671	-.0686	.9145	-.0829	.9493	-.0686	[illegible]	[illegible]
.25	.2352	-.1303			.8083	-.0924	.8319	-.0872	.8738	-.0845	.9155	-.0750	.7646	-.0247
.30	.2398	-.1139							.8122	-.0880	.8666	-.0744	.6853	-.1245
.40	.3818	-.1116	.3400	-.1683	.3468	-.1717	.3243	-.1664	.3103	-.1572	.7453	-.0871	.5984	-.0393
.50			.3235	-.1709	.3790	-.1857	.3833	-.1843			.3019	-.1672	.4832	[illegible]
.60					.3851	-.1796	.3957	-.1566	.3983	-.1736	.3183	-.1712	-.1402	-.1909
.70	.3346	-.1025	.3720	-.1661	.3742	-.1725	.3407	-.1677	.1205	-.1640	.0875	-.1647	-.1515	-.1922
.80	.0318	-.1448	.1008	-.1902			.0863	-.1681	.0959	-.1640	.0758	-.1656	.2407	-.1873
.90	.0216	-.1770	.0716	-.1794	.0726	-.1706	.0747	-.1691	.0922	-.1650	.0674	-.1663		
.95	.0422	-.1671	.0626	-.1733			.0653	-.1687	.0822	-.1649	.0561	-.1663	-.0341	-.1703

TAIL 1

	Cp at y/b of													
	0.02		0.22		0.44		0.56		0.67		0.83		0.98	
x/c	U.S.	L.S.	U.S.	L.S.	U.S.	L.S.	U.S.	L.S.	U.S.	L.S.	U.S.	L.S.	U.S.	L.S.
.05	.1457	.1869	.2383	.3162			.2592	.2986			.2512	.1818	.2953	.2639
.10	.1383	.1673					.2676	.3104	.2473	.2723			.2425	.2665
.15					.2647	.3047	.2593	.3025	.2660	.3025			.2042	.2455
.20	.1267	.1486					.2599	.2996	.2617	.2994			.1761	.2209
.25	-.0196	-.0031	.0741	.2211	.2581	.2896	.2536	.2941	.2583	.2982	.2530	.2861	.1802	.1988
.30			-.0090	.0145			.2505	.2714	.2545	.2912	.2562	.2885	.1777	.1844
.40									.0299	.0482	.2365	.2657	.1830	.1748
.50					-.0010	.0148	.0046	.0216	.0050	.0195	.0154	.0361	.1564	.1223
.60	.2032	.1370	-.0204	-.0145			-.0011	.0138	-.0015	.0133	-.0344	-.0291	-.1242	-.1175
.70					-.0210	-.1083	-.0807	-.0776	-.1314	-.1184	-.1373	-.1257	-.1292	-.1363
.80	.0791	.0703	-.0632	-.0752	-.1203	-.1287	-.1144	-.1281			-.1136	-.1249		
.90	.0765	.0722	-.0741	-.0717	-.1095	-.1070	-.1030	-.1048	-.1058	-.1074	-.1079	-.1117	.1085	-.1068
.95			-.0727	-.0672	-.1091	-.1042	-.0990	-.1006	.1040	-.1029	-.1072	-.1088	-.1224	-.1343

TAIL 2

REPRODUCIBILITY OF THE
ORIGINAL PAGE IS POOR

TABLE XXIII. - CONTINUED
(b) α = -2.05°

	Cp at y/b of													
	0.02		0.22		0.44		0.56		0.67		0.83		0.98	
x/c	U.S.	L.S.	U.S.	L.S.	U.S.	L.S.	U.S.	L.S.	U.S.	L.S.	U.S.	L.S.	U.S.	L.S.
.05			.3168	-.0562	.9938	-.0604	1.0040	-.0552						
.10	.3322	-.0251	.8134	-.0583	.9025	-.0511			.9619	-.0434			.9832	-.0921
.15	.3675	-.0362	.7504	-.0637	.8473	-.0547			.8931	-.0520			.8420	-.0404
.20	.3938	-.0416	.6999	-.0675	.7961	-.0595	.8152	-.0574	.8536	-.0551	.8900	-.0409	.7729	-.0048
.25	.1761	-.1151			.7561	-.0635	.7813	-.0606	.8204	-.0574	.9615	-.0439	.7050	.0115
.30	.1821	-.1018							.7711	-.0609	.8114	-.0540	.6431	.0043
.40	.2864	-.1044	.2706	-.1568	.2993	-.1539	.2922	-.1542	.2853	-.1532	.7124	-.0505	.5560	-.0055
.50			.2523	-.1581	.3157	-.1740	.3257	-.1716			.2905	-.1545	.4664	-.0147
.60					.3160	-.1733	.3459	-.1631	.3381	-.1596	.2767	-.1559	-.0494	-.1736
.70	.2555	-.0976	.3014	-.1539	.3085	-.1644	.2905	-.1590	.0819	-.1569	.0518	-.1586	-.0674	-.1709
.80	-.0042	-.1374	.0613	-.1875			.0507	-.1575	.0518	-.1573	.0391	-.1588	-.0623	-.1810
.90	-.0296	-.1802	.0345	-.1706	.0254	-.1620	.0390	-.1583	.0513	-.1571	.0310	-.1534		
.95	-.0121	-.1728	.0246	-.1645			.0310	-.1581	.0439	-.1572	.0208	-.1537	-.0613	-.1720

TAIL 1

	Cp at y/b of													
	0.02		0.22		0.44		0.56		0.67		0.83		0.98	
x/c	U.S.	L.S.	U.S.	L.S.	U.S.	L.S.	U.S.	L.S.	U.S.	L.S.	U.S.	L.S.	U.S.	L.S.
.05	.1302	.1651	.2297	.3081			.2534	.2961			.2465	.1799	.2897	.2832
.10	.1257	.1491					.2637	.3052	.2451	.2807			.2327	.2714
.15					.2596	.2997	.2552	.2973	.2611	.2997			.2009	.2466
.20	.1165	.1336					.2555	.2954	.2577	.2964			.1777	.2195
.25	-.0182	-.0034	.0681	.2125	.2523	.2835	.2546	.2900	.2547	.2939	.2483	.2951	.1809	.1938
.30			-.0130	.0084			.2449	.2672	.2512	.2861	.2520	.2878	.1794	.1816
.40									.0247	.0451	.2348	.2642	.1776	.1711
.50					-.0043	.0102	.0026	.0196	.0036	.0207	.0147	.0370	.1515	.1169
.60	.1828	.1343	-.0175	-.0124			-.0029	.0111	-.0028	.0131	-.0358	-.0268	-.1305	[illegible]
.70					-.0243	-.0104	-.0854	-.0808	-.1317	-.1196	-.1374	-.1243	-.1309	-.1339
.80	.0531	.0437	-.0654	-.0710	-.1252	-.1303	-.1156	-.1285			-.1134	-.1230		
.90	.0542	.0510	-.0817	-.0825	-.1131	-.1081	-.1055	-.1050	-.1068	-.1056	-.1073	-.1105	-.0983	-.0929
.95			-.0801	-.0747	-.1126	-.1043	-.1040	-.1016	-.1056	-.1019	-.1057	-.1059	-.1062	-.1090

TAIL 2

TABLE XXIII.- CONTINUED
(c) α = -0.05°

	Cp at y/b of													
	0.02		0.22		0.44		0.56		0.67		0.83		0.98	
x/c	U.S.	L.S.	U.S.	L.S.	U.S.	L.S.	U.S.	L.S.	U.S.	L.S.	U.S.	L.S.	U.S.	L.S.
.05			.8096	-.0186	.8860	-.0218	.8921	-.0148						
.10	.3086	.0011	.7223	-.0214	.8127	-.0183			.8579	-.0086			[illegible]	[illegible]
.15	.3265	-.0101	.6604	-.0264	.7609	-.0230			.8095	-.0198			.7748	[illegible]
.20	.3387	-.0211	.6146	-.0304	.7181	-.0270	.7508	-.0307	.7786	-.0241	.8195	-.0150	[illegible]	[illegible]
.25	.1332	-.1012			.6886	-.0310	.7189	-.0287	.7554	-.0263	.7985	-.0206	[illegible]	[illegible]
.30	.1389	-.0919							.7178	-.0297	.7575	-.0249	[illegible]	[illegible]
.40	.2056	-.0947	.2104	-.1433	.2566	-.1439	.2611	-.1384	.2639	-.1354	.6780	-.0339	[illegible]	[illegible]
.50			.1910	-.1424	.2629	-.1573	.2765	-.1556			.2642	-.1388	[illegible]	.0065
.60					.2620	-.1590	.2932	-.1584	.2853	-.1559	.2450	-.1577	[illegible]	[illegible]
.70	.1942	-.0900	.2280	-.1329	.2528	-.1574	.2263	-.1533	.0465	-.1499	.0240	-.1518	[illegible]	[illegible]
.80	-.0336	-.1336	.0245	-.1773			.0176	-.1490	.0177	-.1502	.0089	-.1518	[illegible]	-.1753
.90	-.0610	-.1727	.0027	-.1624	-.0114	-.1529	.0048	-.1495	.0171	-.1498	.0004	-.1525		
.95	-.0461	-.1747	-.0064	-.1483			-.0026	-.1494	.0110	-.1497	-.0094	-.1528	[illegible]	-.1672

TAIL 1

	Cp at y/b of													
	0.02		0.22		0.44		0.56		0.67		0.83		0.98	
x/c	U.S.	L.S.	U.S.	L.S.	U.S.	L.S.	U.S.	L.S.	U.S.	L.S.	U.S.	L.S.	U.S.	L.S.
.05	.1092	.1407	.2244	.3037			.2484	.2935			.2414	.1800	.2848	.2831
.10	.1088	.1296					.2592	.2999	.2423	.2805			.2292	.2755
.15					.2562	.2966	.2517	.2925	.2581	.2973			.1979	.2481
.20	.1025	.1161					.2510	.2913	.2549	.2927			.1799	.2176
.25	-.0120	.0000	.0694	.2043	.2481	.2779	.2508	.2856	.2517	.2890	.2436	.2819	.1854	.1905
.30			-.0173	.0027			.2429	.2637	.2494	.2802	.2475	.2847	.1801	.1795
.40									.0210	.0454	.2324	.2634	.1765	.1686
.50					-.0056	.0082	.0028	.0180	.0047	.0227	.0136	.0356	.1457	.1137
.60	.1560	.1248	-.0061	.0041			-.0037	.0085	-.0013	.0136	-.0372	-.0268	-.1306	-.1254
.70					-.0267	-.0118	-.0852	-.0831	-.1327	-.1200	-.1362	-.1243	-.1296	-.1368
.80	.0257	.0194	-.0691	-.0715	-.1274	-.1329	-.1157	-.1287			-.1125	-.1325		
.90	.0315	.0326	-.0862	-.0857	-.1155	-.1098	-.1064	-.1061	-.1047	-.1034	-.1067	-.1095	-.1010	-.0869
.95			-.0847	-.0792	-.1153	-.1050	-.1054	-.1033	-.1041	-.1004	-.1062	-.1048	-.1095	-.1015

TAIL 2

TABLE XXIII. - CONTINUED
(d) α = 1.95°

	Cp at y/b of													
	0.02		0.22		0.44		0.56		0.67		0.83		0.98	
x/c	U.S.	L.S.	U.S.	L.S.	U.S.	L.S.	U.S.	L.S.	U.S.	L.S.	U.S.	L.S.	U.S.	L.S.
.05			.6677	.0197	.7367	.0144	.7409	.0228						
.10	.2844	.0290	.6324	.0171	.7208	.0165			.7647	.0255			.7771	-.0290
.15	.2865	.0220	.5806	.0130	.6781	.0126			.7161	.0138			.6927	.0375
.20	.2897	.0083	.5370	.0092	.6396	.0091	.6696	.0004	.6938	.0100	.7322	.0159	.6397	.0224
.25	.0910	-.0875			.6150	.0053	.6459	.0066	.6787	.0077	.7194	.0122	.5979	.0394
.30	.0929	-.0801							.6521	.0046	.6904	.0081	.5373	.0324
.40	.1319	-.0821	.1618	-.1274	.2128	-.1258	.2273	-.1208	.2421	-.1170	.6331	-.0015	.4853	.0328
.50			.1461	-.1252	.2110	-.1387	.2285	-.1379			.2462	-.1208	.4152	.0278
.60					.2087	-.1408	.2394	-.1474	.2368	-.1396	.2100	-.1444	-.0621	-.1472
.70	.1459	-.0804	.1542	-.1149	.2031	-.1437	.1774	-.1483	.0124	-.1426	-.0024	-.1440	-.0896	-.1472
.80	-.0538	-.1331	-.0129	-.1617			-.0138	-.1408	-.0154	-.1425	-.0192	-.1441	-.0932	-.1644
.90	-.0839	-.1502	-.0285	-.1548	-.0401	-.1422	-.0255	-.1407	-.0157	-.1417	-.0286	-.1450		
.95	-.0729	-.1733	-.0348	-.1509			-.0327	-.1408	-.0211	-.1419	-.0376	-.1450	-.0896	-.1647

TAIL 1

	Cp at y/b of													
	0.02		0.22		0.44		0.56		0.67		0.83		0.98	
x/c	U.S.	L.S.	U.S.	L.S.	U.S.	L.S.	U.S.	L.S.	U.S.	L.S.	U.S.	L.S.	U.S.	L.S.
.05	.0918	.1315	.2282	.3009			.2441	.2903			.2381	.1802	.2785	.2800
.10	.0923	.1179					.2555	.2948	.2399	.2793			.2263	.2771
.15					.2535	.2908	.2506	.2889	.2552	.2951			.1950	.2483
.20	.0880	.1048					.2500	.2876	.2514	.2886			.1845	.2152
.25	-.0081	.0033	.0598	.1961	.2465	.2734	.2497	.2823	.2502	.2849	.2411	.2801	.1892	.1901
.30			-.0229	-.0023			.2414	.2595	.2488	.2779	.2457	.2824	.1780	.1800
.40									.0230	.0424	.2316	.2591	.1728	.1679
.50					-.0069	.0057	.0039	.0175	.0042	.0218	.0148	.0332	.1412	.1095
.60	.1258	.0987	-.0052	.0022			-.0043	.0070	-.0010	.0138	-.0367	-.0263	-.1316	-.1313
.70					-.0266	-.0143	-.0856	-.0850	-.1337	-.1216	-.1354	-.1241	-.1221	-.1364
.80	.0025	-.0042	-.0754	-.0765	-.1286	-.1362	-.1156	-.1302			-.1132	-.1340		
.90	.0087	.0093	-.0938	-.0949	-.1168	-.1135	-.1071	-.1072	-.1047	-.1043	-.1065	-.1117	-.1013	-.0991
.95			-.0926	-.0891	-.1173	-.1089	-.1065	-.1047	-.1043	-.1019	-.1058	-.1059	-.1084	-.1084

TAIL 2

TABLE XXIII.- CONTINUED

(e) α = 3.95°

	Cp at y/b of													
	0.02		0.22		0.44		0.56		0.67		0.83		0.98	
x/c	U.S.	L.S.	U.S.	L.S.	U.S.	L.S.	U.S.	L.S.	U.S.	L.S.	U.S.	L.S.	U.S.	L.S.
.05			.5363	.0632	.5704	.0538	.5601	.0617						
.10	.2575	.0554	.5047	.0607	.6021	.0561			.6334	.0640			.6105	[illegible]
.15	.2474	.0533	.4727	.0567	.5751	.0533			.6126	.0527			.5815	.0654
.20	.2461	.0424	.4474	.0514	.5470	.0498	.5770	.0366	.5981	.0495	.6234	.0523	.5523	[illegible]
.25	.0577	-.0697			.5280	.0462	.5556	.0465	.5904	.0474	.6253	.0504	.5094	[illegible]
.30	.0614	-.0633							.5711	.0439	.6064	.0462	.4683	[illegible]
.40	.0749	-.0717	.1164	-.1079	.1639	-.1044	.1847	-.0998	.2094	-.0950	.5660	.0360	.4298	[illegible]
.50			.1072	-.1051	.1591	-.1161	.1776	-.1161			.2209	-.0936	.3776	.0341
.60					.1553	-.1166	.1847	-.1303	.1867	-.1188	.1772	-.1268	-.0718	-.1379
.70	.1062	-.0669	.0976	-.0965	.1529	-.1237	.1261	-.1400	-.0143	-.1365	-.0278	-.1362	-.0908	-.1368
.80	-.0702	-.1272	-.0527	-.1534			-.0455	-.1330	-.0468	-.1355	-.0453	-.1365	-.0976	-.1434
.90	-.0962	-.1372	-.0643	-.1449	-.0551	-.1334	-.0559	-.1333	-.0478	-.1343	-.0548	-.1374		
.95	-.0943	-.1592	-.0639	-.1437			-.0619	-.1334	-.0526	-.1343	-.0638	-.1374	-.0984	-.1463

TAIL 1

	Cp at y/b of													
	0.02		0.22		0.44		0.56		0.67		0.83		0.98	
x/c	U.S.	L.S.	U.S.	L.S.	U.S.	L.S.	U.S.	L.S.	U.S.	L.S.	U.S.	L.S.	U.S.	L.S.
.05	.0965	.1736	.2291	.2906			.2421	.2864			.2374	.1797	.2725	.2768
.10	.0902	.1473					.2546	.2901	.2379	.2756			.2240	.2772
.15					.2532	.2849	.2521	.2850	.2543	.2913			.1953	.2468
.20	.0840	.1225					.2506	.2826	.2506	.2847			.1927	.2155
.25	-.0241	-.0051	.0709	.2050	.2477	.2679	.2438	.2751	.2499	.2816	.2415	.2807	.1957	.1929
.30			-.0170	.0057			.2410	.2530	.2478	.2729	.2462	.2822	.1835	.1829
.40									.0250	.0416	.2316	.2570	.1710	.1690
.50					-.0028	.0072	.0047	.0145	.0043	.0203	.0148	.0317	.1407	.1090
.60	.0833	.0628	-.0212	-.0141			-.0036	.0043	-.0004	.0125	-.0362	-.0276	-.1346	-.1354
.70					-.0208	-.0092	-.0849	-.0844	-.1331	-.1239	-.1356	-.1252	-.1259	-.1366
.80	-.0389	-.0583	-.0908	-.0976	-.1354	-.1343	-.1206	-.1328			-.1178	-.1345		
.90	-.0332	-.0308	-.0946	-.1045	-.1167	-.1135	-.1088	-.1115	-.1077	-.1066	-.1065	-.1129	-.1015	-.1073
.95			-.0970	-.1065	-.1171	-.1084	-.1078	-.1070	-.1076	-.1047	-.1080	-.1066	-.1096	-.1125

TAIL 2

TABLE XXIII. - CONTINUED

(f) α = 5.96°

	Cp at y/b of													
	0.02		0.22		0.44		0.56		0.67		0.83		0.98	
x/c	U.S.	L.S.	U.S.	L.S.	U.S.	L.S.	U.S.	L.S.	U.S.	L.S.	U.S.	L.S.	U.S.	L.S.
.05			.4205	.1110	.4305	.0973	.4314	.1048						
.10	.2024	.0743	.3969	.1102	.4871	.1021			.5088	.1079			.4867	.0767
.15	.1938	.0800	.3768	.1048	.4692	.0994			.4907	.0970			.4655	.0952
.20	.1901	.0737	.3533	.0957	.4508	.0963	.4749	.0790	.4919	.0944	.5125	.0958	.4433	.0684
.25	.0272	-.0521			.4366	.0929	.4678	.0924	.4929	.0922	.5125	.0944	.4134	.0657
.30	.0319	-.0445							.4822	.0883	.5054	.0898	.3806	.0609
.40	.0304	-.0469	.0662	-.0870	.1154	-.0795	.1404	-.0757	.1651	-.0698	.4798	.0792	.3563	.0606
.50			.0582	-.0830	.1072	-.0904	.1304	-.0908			.1793	-.0749	.3174	.0463
.60					.1047	-.0935	.1282	-.1081	.1382	-.0933	.1371	-.1053	-.0864	-.1278
.70	.0716	-.0485	.0498	-.0743	.1002	-.1006	.0795	-.1240	-.0427	-.1298	-.0529	-.1275	-.0909	-.1272
.80	-.0785	-.1151	-.0841	-.1503			-.0748	-.1247	-.0759	-.1271	-.0704	-.1279	-.0927	-.1281
.90	-.0955	-.1253	-.0959	-.1368	-.0929	-.1244	-.0850	-.1247	-.0777	-.1254	-.0794	-.1284		
.95	-.0910	-.1467	-.0929	-.1347			-.0909	-.1248	-.0824	-.1253	-.0873	-.1285	-.0854	-.1476

TAIL 1

	Cp at y/b of													
	0.02		0.22		0.44		0.56		0.67		0.83		0.98	
x/c	U.S.	L.S.	U.S.	L.S.	U.S.	L.S.	U.S.	L.S.	U.S.	L.S.	U.S.	L.S.	U.S.	L.S.
.05	.1079	.2031	.2352	.2898			.2448	.2841			.2386	.1752	.2652	.2774
.10	.0969	.1745					.2571	.2866	.2374	.2766			.2235	.2776
.15					.2567	.2803	.2547	.2822	.2549	.2884			.1995	.2474
.20	.0743	.1397					.2512	.2793	.2515	.2817			.2040	.2187
.25	-.0478	-.0124	.0704	.2136	.2516	.2654	.2502	.2720	.2506	.2763	.2440	.2806	.2029	.1981
.30			-.0136	.0125			.2406	.2488	.2487	.2675	.2478	.2812	.1901	.1882
.40									.0266	.0381	.2333	.2529	.1741	.1717
.50					.0034	.0123	.0089	.0169	.0048	.0177	.0169	.0290	.1401	.1077
.60	.0521	.0044	-.0490	-.0400			.0022	.0083	.0004	.0113	-.0343	-.0295	-.1375	-.1388
.70					-.0169	-.0016	-.0807	-.0791	-.1312	-.1249	-.1350	-.1269	-.1283	-.1346
.80	-.0600	-.0781	-.1153	-.1329	-.1415	-.1330	-.1351	-.1294			-.1190	-.1346		
.90	-.0592	-.0618	-.1010	-.1185	-.1188	-.1153	-.1145	-.1160	-.1110	-.1094	-.1087	-.1118	-.1051	-.1070
.95			-.1027	-.1146	-.1171	-.1096	-.1119	-.1081	-.1100	-.1059	-.1077	-.1063	-.1139	-.1123

TAIL 2

TABLE XXIII.- CONTINUED

(g) $\alpha = 7.95°$

	Cp at y/b of													
	0.02		0.22		0.44		0.56		0.67		0.83		0.98	
x/c	U.S.	L.S.	U.S.	L.S.	U.S.	L.S.	U.S.	L.S.	U.S.	L.S.	U.S.	L.S.	U.S.	L.S.
.05			.3186	.1595	.3178	.1447	.3386	.1535						
.10	.1348	.0944	.3075	.1616	.3779	.1529			.4083	.1591			.3929	.1640
.15	.1400	.1021	.2828	.1518	.3702	.1501			.3925	.1483			.3727	.1369
.20	.1317	.0998	.2657	.1385	.3551	.1476	.3999	.1276	.3893	.1462	.4129	.1435	.3548	.1047
.25	-.0081	-.0349			.3453	.1445	.3754	.1438	.3917	.1432	.4142	.1427	.3294	.0951
.30	-.0126	-.0272							.3869	.1389	.4079	.1388	.3008	.0833
.40	-.0109	-.0168	.0194	-.0657	.0705	-.0513	.0931	-.0465	.1127	-.0395	.3896	.1277	.2797	.0819
.50			.0112	-.0602	.0562	-.0629	.0806	-.0607			.1271	-.0467	.2480	.0663
.60					.0514	-.0680	.0910	-.0800	.0898	-.0650	.0877	-.0796	-.1051	-.1242
.70	.0556	-.0299	.0040	-.0488	.0476	-.0765	.0329	-.1012	-.0734	-.1372	-.0795	-.1226	-.1046	-.1239
.80	-.0976	-.1005	-.1141	-.1441			-.1030	-.1196	-.1002	-.1228	-.0957	-.1223	-.1054	-.1218
.90	-.0880	-.1134	-.1204	-.1355	-.1160	-.1185	-.1124	-.1192	-.1039	-.1207	-.1042	-.1226		
.95	-.0806	-.1347	-.1142	-.1294			-.1169	-.1192	-.1082	-.1205	-.1108	-.1225	-.1055	-.1519

TAIL 1

	Cp at y/b of													
	0.02		0.22		0.44		0.56		0.67		0.83		0.98	
x/c	U.S.	L.S.	U.S.	L.S.	U.S.	L.S.	U.S.	L.S.	U.S.	L.S.	U.S.	L.S.	U.S.	L.S.
.05	.1029	.1978	.2229	.2821			.2508	.2834			.2427	.1760	.2604	.2766
.10	.0903	.1715					.2624	.2852	.2402	.2725			.2243	.2779
.15					.2621	.2803	.2597	.2804	.2586	.2871			.2066	.2483
.20	.0681	.1347					.2551	.2779	.2555	.2799			.2130	.2237
.25	-.0585	-.0188	.0729	.2139	.2536	.2666	.2525	.2714	.2539	.2740	.2456	.2797	.2094	.2030
.30			-.0183	.0109			.2422	.2487	.2506	.2638	.2476	.2789	.1915	.1927
.40									.0254	.0361	.2324	.2486	.1721	.1718
.50					.0248	.0220	.0101	.0177	.0033	.0150	.0171	.0276	.1387	.1083
.60	-.0169	-.0336	-.0851	-.0541			.0144	.0135	-.0013	.0090	-.0345	-.0314	-.1406	-.1407
.70					-.0064	.0152	-.0680	-.0717	-.1301	-.1242	-.1359	-.1280	-.1295	-.1345
.80	-.0648	-.0947	-.1330	-.1252	-.1419	-.1281	-.1335	-.1206			-.1195	-.1330		
.90	-.0722	-.0879	-.1298	-.1233	-.1241	-.1160	-.1187	-.1234	-.1129	-.1112	-.1095	-.1094	-.1046	-.1061
.95			-.1295	-.1232	-.1198	-.1096	-.1123	-.1124	-.1100	-.1064	-.1090	-.1046	-.1145	-.1115

TAIL 2

TABLE XXIII. - CONTINUED

(h) $\alpha = 9.95°$

	Cp at y/b of													
	0.02		0.22		0.44		0.56		0.67		0.83		0.98	
x/c	U.S.	L.S.	U.S.	L.S.	U.S.	L.S.	U.S.	L.S.	U.S.	L.S.	U.S.	L.S.	U.S.	L.S.
.05			.2234	.2128	.2245	.1981	.2551	.2089						
.10	.0677	.1153	.2180	.2144	.2762	.2090			.3150	.2162			.3110	.2326
.15	.0773	.1230	.1995	.1967	.2758	.2073			.3035	.2067			.2866	.1758
.20	.0664	.1224	.1838	.1794	.2641	.2053	.3114	.1858	.2980	.2045	.3202	.1989	.2731	.1532
.25	-.0613	-.0166			.2572	.2010	.2832	.2022	.2989	.2015	.3211	.1992	.2515	.1386
.30	-.0644	-.0091							.2926	.1970	.3166	.1963	.2291	.1236
.40	-.0566	.0145	-.0245	-.0431	.0241	-.0223	.0434	-.0138	.0624	-.0059	.3018	.1831	.2093	.1134
.50			-.0290	-.0359	.0087	-.0358	.0299	-.0278			.0732	-.0142	.1861	.0931
.60					.0026	-.0422	.0458	-.0466	.0378	-.0313	.0351	-.0501	-.1210	-.1329
.70	.0522	-.0137	-.0326	-.0182	-.0025	-.0517	-.0095	-.0769	-.1041	-.1409	-.1086	-.1323	-.1197	-.1279
.80	-.1118	-.0883	-.1350	-.1262			-.1289	-.1228	-.1249	-.1254	-.1220	-.1207	-.1274	-.1223
.90	-.0682	-.1040	-.1255	-.1420	-.1364	-.1165	-.1371	-.1185	-.1290	-.1194	-.1284	-.1194		
.95	-.0767	-.1209	-.1201	-.1298			-.1333	-.1179	-.1299	-.1188	-.1303	-.1190	-.1039	-.1219

TAIL 1

	Cp at y/b of													
	0.02		0.22		0.44		0.56		0.67		0.83		0.98	
x/c	U.S.	L.S.	U.S.	L.S.	U.S.	L.S.	U.S.	L.S.	U.S.	L.S.	U.S.	L.S.	U.S.	L.S.
.05	.0901	.1766	.1780	.2525			.2602	.2828			.2444	.1782	.2560	.2752
.10	.0796	.1499					.2702	.2852	.2476	.2711			.2239	.2762
.15					.2678	.2783	.2654	.2769	.2650	.2863			.2136	.2484
.20	.0646	.1177					.2614	.2757	.2593	.2785			.2174	.2242
.25	-.0605	-.0276	.0319	.1817	.2608	.2679	.2601	.2723	.2574	.2718	.2476	.2783	.2126	.2044
.30			-.0536	-.0137			.2512	.2515	.2545	.2639	.2481	.2753	.1951	.1940
.40									.0286	.0363	.2314	.2435	.1754	.1727
.50					.0218	.0202	.0155	.0197	.0074	.0164	.0168	.0245	.1382	.1092
.60	-.0520	-.0481	-.1084	-.0680			.0243	.0188	.0043	.0114	-.0336	-.0337	-.1423	-.1424
.70					-.0077	.0236	-.0548	-.0597	-.1260	-.1237	-.1356	-.1295	-.1252	-.1324
.80	-.1220	-.1352	-.1494	-.1377	-.1438	-.1297	-.1279	-.1124			-.1188	-.1315		
.90	-.1224	-.1418	-.1507	-.1385	-.1502	-.1471	-.1326	-.1258	-.1126	-.1123	-.1085	-.1087	-.1040	-.1004
.95			-.1525	-.1402	-.1369	-.1455	-.1174	-.1275	-.1055	-.1065	-.1074	-.1043	-.1134	-.1106

TAIL 2

TABLE XXIII. - CONTINUED

(i) α = 11.95°

	Cp at y/b of													
	0.02		0.22		0.44		0.56		0.67		0.83		0.98	
x/c	U.S.	L.S.	U.S.	L.S.	U.S.	L.S.	U.S.	L.S.	U.S.	L.S.	U.S.	L.S.	U.S.	L.S.
.05			.1455	.2724	.1507	.2574	.1840	.2699						
.10	.0136	.1385	.1443	.2656	.1948	.2732			.2359	.2813			.2315	.2765
.15	.0212	.1470	.1299	.2399	.1973	.2728			.2267	.2723			.2098	.2243
.20	.0050	.1483	.1136	.2190	.1854	.2683	.2329	.2483	.2241	.2705	.2407	.2604	.2000	.2064
.25	-.1014	.0023			.1798	.2615	.2043	.2680	.2230	.2681	.2339	.2619	.1816	.1890
.30	-.0997	.0104							.2155	.2629	.2347	.2584	.1645	.1719
.40	-.0767	.0483	-.0632	-.0192	-.0169	.0046	-.0005	.0226	.0146	.0333	.2227	.2420	.1516	.1543
.50			-.0673	-.0103	-.0337	-.0092	-.0149	.0055			.0255	.0218	.1329	.1288
.60					-.0401	-.0159	.0029	-.0157	-.0090	.0057	-.0094	-.0168	-.1334	-.1373
.70	.0414	.0041	-.0546	.0123	-.0467	-.0259	-.0492	-.0491	-.1271	-.1238	-.1334	-.1363	-.1404	-.1474
.80	-.0836	-.0773	-.1369	-.1072			-.1471	-.1441	-.1454	-.1423	-.1416	-.1357	-.1338	-.1410
.90	-.0588	-.0985	-.1280	-.1336	-.1276	-.1186	-.1298	-.1254	-.1258	-.1262	-.1211	-.1168		
.95	-.0746	-.1084	-.1249	-.1320			-.1260	-.1206	-.1209	-.1197	-.1160	-.1135	-.0952	-.1024

TAIL 1

	Cp at y/b of													
	0.02		0.22		0.44		0.56		0.67		0.83		0.98	
x/c	U.S.	L.S.	U.S.	L.S.	U.S.	L.S.	U.S.	L.S.	U.S.	L.S.	U.S.	L.S.	U.S.	L.S.
.05	.0821	.1591	.1178	.2104			.2659	.2673			.2519	.1776	.2576	.2758
.10	.0710	.1352					.2772	.2773	.2569	.2697			.2281	.2787
.15					.2253	.2367	.2659	.2710	.2798	.2863			.2231	.2500
.20	.0550	.1087					.2614	.2664	.2747	.2803			.2247	.2260
.25	-.0675	-.0335	-.0115	.1297	.2105	.2263	.2613	.2638	.2712	.2756	.2559	.2779	.2191	.2064
.30			-.0840	-.0422			.2556	.2461	.2682	.2680	.2572	.2760	.2015	.1962
.40									.0362	.0382	.2411	.2483	.1814	.1739
.50					-.0243	-.0212	.0059	.0103	.0161	.0192	.0212	.0270	.1424	.1101
.60	-.0647	-.0539	-.1092	-.0863			.0174	.0032	.0105	.0138	-.0284	-.0315	-.1413	-.1424
.70					-.0264	.0131	-.0475	-.0693	-.1245	-.1201	-.1321	-.1281	-.1224	-.1292
.80	-.1323	-.1431	-.1734	-.1698	-.1564	-.1333	-.1272	-.1059			-.1173	-.1304		
.90	-.1384	-.1542	-.1726	-.1718	-.1729	-.1557	-.1444	-.1201	-.1138	-.1081	-.1050	-.1075	-.1014	-.0996
.95			-.1710	-.1700	-.1605	-.1618	-.1286	-.1280	-.1021	-.1032	-.1037	-.1030	-.1104	-.1090

TAIL 2

TABLE XXIII. - CONTINUED

(j) α = 15.95°

	Cp at y/b of													
	0.02		0.22		0.44		0.56		0.67		0.83		0.98	
x/c	U.S.	L.S.	U.S.	L.S.	U.S.	L.S.	U.S.	L.S.	U.S.	L.S.	U.S.	L.S.	U.S.	L.S.
.05			-.0136	.3799	.0101	.4137	.0441	.4312						
.10	-.0934	.1825	-.0207	.3383	.0461	.4254			.0817	.4436			.0935	.3727
.15	-.0986	.1919	-.0013	.3050	.0608	.4053			.0885	.4342			.0717	.3633
.20	-.1068	.1961	.0052	.2822	.0608	.3809	.1352	.3829	.0923	.4271	.0900	.4165	.0624	.3433
.25	-.1496	.0399			.0553	.3607	.0722	.3958	.0924	.4159	.0908	.4199	.0510	.3274
.30	-.1363	.0536							.0869	.3994	.0958	.4138	.0435	.3071
.40	-.0962	.1006	-.1175	.0290	-.0851	.0525	-.0725	.0749	-.0655	.1001	.0893	.3836	.0497	.2834
.50			-.1141	.0506	-.1029	.0424	-.0909	.0573			-.0550	.1007	.0458	.2434
.60					-.1100	.0384	-.0513	.0363	-.0905	.0635	-.0840	.0558	-.1463	-.1211
.70	.0101	.0378	-.0738	.0788	-.1180	.0335	-.1184	-.0053	-.1437	-.0933	-.1386	-.0972	-.1502	-.1233
.80	-.0820	-.0583	-.1407	-.0846			-.1330	-.1166	-.1358	-.1179	-.1359	-.1113	-.1228	-.1201
.90	-.0687	-.1012	-.1498	-.1047	-.1355	-.1057	-.1335	-.1244	-.1317	-.1211	-.1353	-.1185		
.95	-.0832	-.1016	-.1329	-.1086			-.1338	-.1261	-.1311	-.1239	-.1351	-.1227	-.1429	-.1181

TAIL 1

	Cp at y/b of													
	0.02		0.22		0.44		0.56		0.67		0.83		0.98	
x/c	U.S.	L.S.	U.S.	L.S.	U.S.	L.S.	U.S.	L.S.	U.S.	L.S.	U.S.	L.S.	U.S.	L.S.
.05	.0429	.1283	.0635	.1157			.1326	.1417			.2863	.1777	.2779	.2847
.10	.0301	.1120					.1239	.1433	.2243	.2378			.2456	.2875
.15					.0242	.0524	.1127	.1380	.2251	.2268			.2411	.2569
.20	.0080	.0780					.1059	.1325	.2178	.2205			.2391	.2278
.25	-.0979	-.0542	-.0473	.0786	.0103	.0372	.0991	.1224	.2103	.2198	.2780	.2823	.2326	.2050
.30			-.1112	-.0662			.0310	.1056	.2040	.2143	.2811	.2830	.2162	.1939
.40									-.0187	-.0048	.2687	.2654	.1944	.1773
.50					-.1350	-.1208	-.0984	-.0852	-.0467	-.0344	.0365	.0368	.1593	.1135
.60	-.0919	-.0717	-.1442	-.1145			-.1099	-.1014	-.0581	-.0443	-.0160	-.0232	-.1355	-.1379
.70					-.1361	-.1302	-.1546	-.1520	-.1615	-.1477	-.1267	-.1227	-.1315	-.1318
.80	-.1556	-.1603	-.1942	-.1813	-.1868	-.1806	-.1847	-.1828			-.1399	-.1346		
.90	-.1657	-.1770	-.1905	-.1895	-.1847	-.1783	-.1741	-.1780	-.1589	-.1621	-.1241	-.1295	-.1071	-.1068
.95			-.1879	-.1869	-.1814	-.1766	-.1699	-.1715	-.1533	-.1562	-.1159	-.1219	-.1147	-.1128

TAIL 2

TABLE XXIII. - CONCLUDED

(h) α = 19.95°

	Cp at y/b of													
	0.02		0.22		0.44		0.56		0.67		0.83		0.98	
x/c	U.S.	L.S.	U.S.	L.S.	U.S.	L.S.	U.S.	L.S.	U.S.	L.S.	U.S.	L.S.	U.S.	L.S.
.05			-.0229	.4953	-.0225	.6013	.0158	.6425						
.10	-.0996	.2644	-.0389	.4355	-.0014	.5587			.0459	.6170			.0708	.6135
.15	-.1319	.2773	-.0573	.3974	.0005	.5195			.0363	.5779			.0532	.5826
.20	-.1702	.2853	-.0762	.3770	-.0067	.4859	.0478	.4968	.0285	.5549	.0500	.5746	.0468	.5448
.25	-.1825	.1029			-.0176	.4595	-.0047	.4973	.0242	.5322	.0417	.5657	.0403	.4953
.30	-.1782	.1214							.0164	.5058	.0328	.5431	.0370	.4543
.40	-.1561	.1774	-.1636	.1003	-.1322	.1064	-.1130	.1255	-.1112	.1482	.0207	.4907	.0348	.4005
.50			-.1623	.1363	-.1546	.0982	-.1398	.1160			-.0994	.1515	.0228	.3250
.60					-.1623	.0992	-.1056	.0973	-.1385	.1227	-.1243	.1103	-.1581	-.1014
.70	-.0224	.0963	-.1438	.1506	-.1627	.1115	-.1580	.0463	-.1535	-.0590	-.1533	-.0637	-.1466	-.1186
.80	-.0966	-.0215	-.1769	-.0522			-.1551	-.0802	-.1486	-.0836	-.1530	-.0766	-.1334	-.1251
.90	-.0825	-.0916	-.1687	-.0702	-.1556	-.0452	-.1564	-.0799	-.1499	-.0867	-.1529	-.0838		
.95	-.0951	-.1031	-.1474	-.0757			-.1565	-.0794	-.1494	-.0905	-.1529	-.0892	-.1389	-.1235

TAIL 1

	Cp at y/b of													
	0.02		0.22		0.44		0.56		0.67		0.83		0.98	
x/c	U.S.	L.S.	U.S.	L.S.	U.S.	L.S.	U.S.	L.S.	U.S.	L.S.	U.S.	L.S.	U.S.	L.S.
.05	.0047	.1024	-.0037	.0452			.0071	.0256			.0845	.1030	.2675	.2215
.10	-.0145	.0858					-.0012	.0290	.0895	.1330			.2375	.1987
.15					-.0256	.0117	-.0072	.0274	.0157	.0459			.2074	.1802
.20	-.0366	.0425					-.0132	.0242	.0083	.0409			.1713	.1621
.25	-.1255	-.0795	-.0884	.0268	-.0405	-.0020	-.0180	.0189	.0036	.0398	.0704	.0846	.1614	.1473
.30			-.1420	-.0983			-.0240	.0049	-.0004	.0336	.0588	.0757	.1512	.1436
.40									-.1217	-.1048	.0430	.0553	.1375	.1327
.50					-.1519	-.1375	-.1442	-.1276	-.1403	-.1256	-.1060	-.1000	.0993	.0876
.60	-.1118	-.0923	-.1651	-.1392			-.1560	-.1434	-.1458	-.1322	-.1434	-.1443	-.1513	-.1409
.70					-.1524	-.1418	-.1835	-.1776	-.1895	-.1794	-.1924	-.1883	-.1640	-.1429
.80	-.1676	-.1691	-.2020	-.1938	-.1984	-.1919	-.2005	-.1936			-.1984	-.1932		
.90	-.1817	-.1875	-.1985	-.1979	-.1954	-.1925	-.1937	-.1933	-.1865	-.1869	-.1861	-.1813	-.1766	-.1694
.95			-.1971	-.1958	-.1926	-.1902	-.1915	-.1907	-.1884	-.1871	-.1913	-.1887	-.1939	-.1881

TAIL 2

TABLE XXIV - PRESSURE COEFFICIENTS, $\Phi = 90°$, $\delta_{1,3} = -15°$, $M = 3.70$
(a) $\alpha = -4.20°$

	Cp at y/b of													
	0.02		0.22		0.44		0.56		0.67		0.83		0.98	
x/c	U.S.	L.S.	U.S.	L.S.	U.S.	L.S.	U.S.	L.S.	U.S.	L.S.	U.S.	L.S.	U.S.	L.S.
.05			.7656	-.0284	.7337	-.0151	.7307	-.0171						
.10	.2238	-.0217	.7437	-.0343	.8100	-.0274			.7907	-.0242			.7335	-.0173
.15	.2268	-.0223	.7038	-.0378	.7856	-.0335			.7815	-.0309			.7222	-.0151
.20	.2804	-.0260	.6727	-.0319	.7563	-.0356	.7601	-.0129	.7811	-.0351	.7711	-.0301	.7085	-.0161
.25	.1732	-.0454			.7314	-.0399	.7592	-.0367	.7762	-.0372	.7802	-.0361	.6803	-.0157
.30	.1737	-.0462							.7602	-.0395	.7740	-.0390	.6535	-.0176
.40	.2283	-.0473	.3122	-.0465	.3383	.0565	.3657	-.0557	.4014	-.0537	.7410	-.0429	.6223	-.0157
.50			.2974	-.0527	.3351	-.0592	.3498	-.0569			.4045	-.0542	.5749	-.0346
.60					.3272	-.0576	.3516	-.0292	.3576	-.0486	.3471	-.0583	.0957	-.0646
.70	.2645	-.0353	.2501	-.0477	.3184	-.0578	.3022	-.0542	.1434	-.0538	.1299	-.0585	.0548	-.0628
.80	.0780	-.0519	.0919	-.0549			.1066	-.0557	.1037	-.0484	.1121	-.0589	.0453	-.0619
.90	.0173	-.0598	.0692	-.0548	.0869	-.0422	.0941	-.0559	.0989	-.0568	.1039	-.0589		
.95	.0007	-.0604	.0652	-.0549			.0885	-.0555	.0928	-.0568	.0956	-.0590	.0305	-.0557

TAIL 1

	Cp at y/b of													
	0.02		0.22		0.44		0.56		0.67		0.83		0.98	
x/c	U.S.	L.S.	U.S.	L.S.	U.S.	L.S.	U.S.	L.S.	U.S.	L.S.	U.S.	L.S.	U.S.	L.S.
.05	.0839	.1094	.1735	.2165			.1856	.2136			.1853	.1985	.2106	.2256
.10	.0898	.1118					.1837	.2143	.1871	.2732			.2016	.2064
.15					.1759	.2054	.1787	.2126	.1790	.2163			.1844	.1906
.20	.0830	.1014					.1767	.2106	.1772	.2106			.1568	.1759
.25	.0073	.0224	.0834	.1653	.1743	.1999	.1756	.2063	.1751	.2096	.1746	.1983	.1513	.1631
.30			.0280	.0473			.1700	.1917	.1743	.2035	.1760	.2017	.1440	.1573
.40									.0458	.0617	.1687	.1841	.1401	.1497
.50					.0144	.0282	.0142	.0278	.0219	.0344	.0355	.0519	.1193	.1137
.60	.0137	.0237	-.0013	.0124			.0083	.0209	.0143	.0270	-.0014	.0101	-.0350	-.0269
.70					.0009	.0129	-.0238	-.0156	-.0367	-.0235	-.0419	-.0347	-.0385	-.0291
.80	.0048	.0066	-.0416	-.0388	-.0348	-.0382	-.0348	-.0390			-.0334	-.0384		
.90	.0177	.0129	-.0363	-.0344	-.0311	-.0310	-.0315	-.0297	-.0314	-.0294	-.0270	-.0231	-.0312	-.0283
.95			-.0356	-.0335	-.0304	-.0283	-.0308	-.0282	-.0307	-.0279	-.0306	-.0292	-.0360	-.0403

TAIL 2

TABLE XXIV.- CONTINUED

(b) α = -2.20°

	Cp at y/b of													
	0.02		0.22		0.44		0.56		0.67		0.83		0.98	
x/c	U.S.	L.S.	U.S.	L.S.	U.S.	L.S.	U.S.	L.S.	U.S.	L.S.	U.S.	L.S.	U.S.	L.S.
.05			.6588	-.0153	.6016	-.0056	.6152	-.0042						
.10	.2125	-.0116	.6563	-.0224	.6572	-.0160			.6753	-.0107			.6315	-.0080
.15	.2251	-.0126	.6290	-.0254	.6874	-.0220			.5610	-.0182			.6233	-.0054
.20	.2554	-.0159	.5914	-.0242	.6695	-.0248	.6866	-.0089	.6622	-.0221	.6558	-.0195	.6058	-.0079
.25	.1475	-.0413			.6606	-.0279	.6687	-.0253	.5672	-.0250	.6647	-.0248	.5844	-.0053
.30	.1444	-.0412							.6563	-.0272	.6602	-.0231	.5835	-.0070
.40	.1674	-.0452	.2614	-.0475	.2844	-.0564	.3256	-.0533	.3462	-.0548	.6366	-.0326	.5342	-.0052
.50			.2450	-.0525	.2908	-.0577	.3065	-.0568			.3433	-.0519	.4921	-.0158
.60					.2830	-.0557	.3183	-.0294	.3148	-.0486	.2935	-.0601	.0700	-.0646
.70	.1869	-.0356	.2048	-.0465	.2758	-.0553	.2518	-.0516	.1161	-.0525	.0983	-.0585	.0285	-.0625
.80	.0439	-.0505	.0595	-.0527			.0809	-.0529	.0778	-.0486	.0817	-.0586	.0134	-.0619
.90	-.0023	-.0615	.0385	-.0533	.0642	-.0415	.0651	-.0532	.0705	-.0566	.0742	-.0583		
.95	-.0100	-.0609	.0349	-.0534			.0586	-.0529	.0652	-.0567	.0669	-.0581	.0109	-.0558

TAIL 1

	Cp at y/b of													
	0.02		0.22		0.44		0.56		0.67		0.83		0.98	
x/c	U.S.	L.S.	U.S.	L.S.	U.S.	L.S.	U.S.	L.S.	U.S.	L.S.	U.S.	L.S.	U.S.	L.S.
.05	.0680	.0867	.1665	.2078			.1793	.2075			.1776	.1853	.2056	.2158
.10	.0776	.0946					.1779	.2091	.1815	.2479			.1968	.2001
.15					.1699	.1993	.1735	.2069	.1732	.2098			.1770	.1849
.20	.0722	.0860					.1707	.2046	.1714	.2048			.1511	.1706
.25	.0063	.0188	.0733	.1574	.1681	.1940	.1695	.2003	.1706	.2027	.1691	.1923	.1439	.1582
.30			.0240	.0432			.1638	.1863	.1690	.1978	.1722	.1958	.1363	.1523
.40									.0437	.0604	.1624	.1815	.1318	.1429
.50					.0142	.0277	.0129	.0273	.0198	.0331	.0331	.0521	.1130	.1070
.60	.0204	.0243	-.0034	.0103			.0067	.0196	.0123	.0257	-.0031	.0093	-.0384	-.0307
.70					-.0004	.0124	-.0253	-.0169	-.0378	-.0252	-.0434	-.0357	-.0400	-.0313
.80	.0126	.0095	-.0424	-.0398	-.0343	-.0378	-.0357	-.0398			-.0350	-.0403		
.90	.0174	.0107	-.0377	-.0356	-.0318	-.0310	-.0319	-.0307	-.0326	-.0311	-.0290	-.0249	-.0307	-.0274
.95			-.0369	-.0345	-.0308	-.0284	-.0314	-.0290	-.0320	-.0295	-.0326	-.0305	-.0348	-.0323

TAIL 2

TABLE XXIV.- CONTINUED

(c) $\alpha = -0.20°$

	Cp at y/b of													
	0.02		0.22		0.44		0.56		0.67		0.83		0.98	
x/c	U.S.	L.S.	U.S.	L.S.	U.S.	L.S.	U.S.	L.S.	U.S.	L.S.	U.S.	L.S.	U.S.	L.S.
.05			.5453	-.0013	.5033	.0060	.5205	.0099						
.10	.1890	-.0002	.5540	-.0065	.5490	-.0016			.5782	.0035			.5432	.0025
.15	.1950	-.0019	.5388	-.0108	.5668	-.0074			.5661	-.0045			.5377	.0059
.20	.2146	-.0051	.5200	-.0123	.5676	-.0105	.5784	-.0031	.5627	-.0084	.5639	-.0064	.5200	.0006
.25	.1133	-.0346			.5605	-.0133	.5647	-.0125	.5655	-.0113	.5709	-.0115	.4997	.0009
.30	.1106	-.0361							.5580	-.0138	.5672	-.0150	.4756	-.0011
.40	.1234	-.0428	.2063	-.0472	.2337	-.0547	.2673	-.0507	.2746	-.0502	.5473	-.0139	.4580	-.0021
.50			.1912	-.0533	.2388	-.0596	.2564	-.0588			.2856	-.0475	.4207	-.0040
.60					.2348	-.0557	.2677	-.0313	.2553	-.0504	.2329	-.0532	.0468	-.0603
.70	.1311	-.0362	.1534	-.0456	.2268	-.0537	.2019	-.0512	.0830	-.0522	.0643	-.0564	.0087	-.0579
.80	.0175	-.0502	.0300	-.0510			.0547	-.0522	.0508	-.0478	.0478	-.0563	-.0006	-.0570
.90	-.0183	-.0615	.0080	-.0516	.0397	-.0409	.0394	-.0528	.0434	-.0551	.0417	-.0560		
.95	-.0220	-.0613	.0053	-.0519			.0328	-.0528	.0384	-.0553	.0356	-.0559	-.0079	-.0519

TAIL 1

	Cp at y/b of													
	0.02		0.22		0.44		0.56		0.67		0.83		0.98	
x/c	U.S.	L.S.	U.S.	L.S.	U.S.	L.S.	U.S.	L.S.	U.S.	L.S.	U.S.	L.S.	U.S.	L.S.
.05	.0551	.0644	.1626	.2032			.1749	.2043			.1747	.1769	.2052	.2120
.10	.0665	.0753					.1740	.2064	.1776	.2323			.1957	.1994
.15					.1665	.1960	.1703	.2043	.1707	.2071			.1735	.1852
.20	.0626	.0721					.1674	.2016	.1686	.2011			.1475	.1718
.25	.0080	.0186	.0713	.1515	.1646	.1900	.1661	.1972	.1674	.1993	.1671	.1909	.1409	.1595
.30			.0213	.0391			.1604	.1831	.1658	.1943	.1706	.1942	.1337	.1526
.40									.0423	.0576	.1604	.1782	.1283	.1411
.50					.0135	.0267	.0123	.0267	.0192	.0323	.0327	.0516	.1086	.1039
.60	.0309	.0335	-.0040	.0082			.0069	.0193	.0120	.0256	-.0034	.0106	-.0419	-.0341
.70					-.0008	.0115	-.0252	-.0174	-.0386	-.0267	-.0446	-.0363	-.0413	-.0331
.80	.0170	.0139	-.0421	-.0393	-.0354	-.0389	-.0363	-.0413			-.0361	-.0419		
.90	.0146	.0128	-.0385	-.0362	-.0327	-.0318	-.0327	-.0322	-.0337	-.0322	-.0302	-.0265	-.0319	-.0290
.95			-.0375	-.0350	-.0317	-.0293	-.0322	-.0302	-.0331	-.0304	-.0339	-.0308	-.0356	-.0323

TAIL 2

TABLE XXIV.- CONTINUED
(d) α = 1.81°

	Cp at y/b of													
	0.02		0.22		0.44		0.56		0.67		0.83		0.98	
x/c	U.S.	L.S.	U.S.	L.S.	U.S.	L.S.	U.S.	L.S.	U.S.	L.S.	U.S.	L.S.	U.S.	L.S.
.05			.4419	.0180	.4177	.0217	.4333	.0289						
.10	.1602	.0122	.4524	.0137	.4534	.0169			.4871	.0220			.4632	.0161
.15	.1691	.0116	.4406	.0090	.4632	.0115			.4794	.0139			.4583	.0207
.20	.1780	.0089	.4255	.0047	.4731	.0080	.4957	.0068	.4766	.0098	.4796	.0107	.4428	.0140
.25	.0794	-.0255			.4684	.0052	.4688	.0059	.4777	.0061	.4850	.0065	.4230	.0111
.30	.0718	-.0294							.4718	.0036	.4809	.0030	.4029	.0077
.40	.0751	-.0398	.1587	-.0441	.1871	-.0505	.2086	-.0454	.2189	-.0432	.4643	-.0026	.3853	.0052
.50			.1446	-.0509	.1805	-.0578	.1988	-.0556			.2325	-.0407	.3563	-.0010
.60					.1810	-.0572	.2230	-.0323	.1970	-.0506	.1825	-.0573	.0261	-.0571
.70	.0884	-.0359	.1123	-.0452	.1775	-.0533	.1553	-.0510	.0527	-.0518	.0372	-.0545	-.0076	-.0555
.80	.0018	-.0504	.0095	-.0498			.0287	-.0512	.0289	-.0464	.0209	-.0541	-.0159	-.0546
.90	-.0278	-.0569	-.0124	-.0499	.0219	-.0399	.0167	-.0516	.0199	-.0531	.0156	-.0539		
.95	-.0299	-.0591	-.0161	-.0502			.0112	-.0517	.0158	-.0534	.0104	-.0539	-.0211	-.0499

TAIL 1

	Cp at y/b of													
	0.02		0.22		0.44		0.56		0.67		0.83		0.98	
x/c	U.S.	L.S.	U.S.	L.S.	U.S.	L.S.	U.S.	L.S.	U.S.	L.S.	U.S.	L.S.	U.S.	L.S.
.05	.0463	.0604	.1595	.1959			.1711	.2019			.1707	.1696	.2071	.2092
.10	.0566	.0691					.1704	.2048	.1746	.2242			.1943	.1996
.15					.1644	.1938	.1670	.2020	.1681	.2040			.1715	.1875
.20	.0522	.0636					.1642	.1992	.1659	.1985			.1467	.1751
.25	.0074	.0163	.0697	.1470	.1620	.1870	.1630	.1948	.1649	.1967	.1639	.1881	.1416	.1630
.30			.0183	.0356			.1573	.1812	.1635	.1919	.1673	.1903	.1343	.1548
.40									.0409	.0539	.1570	.1759	.1251	.1417
.50					.0133	.0258	.0126	.0266	.0186	.0326	.0319	.0485	.1084	.1027
.60	.0352	.0362	-.0056	.0056			.0067	.0196	.0119	.0260	-.0037	.0102	-.0411	-.0365
.70					-.0011	.0102	-.0244	-.0175	-.0388	-.0272	-.0468	-.0376	-.0411	-.0346
.80	.0059	.0018	-.0428	-.0405	-.0362	-.0399	-.0377	-.0429			-.0383	-.0428		
.90	.0026	.0001	-.0396	-.0376	-.0334	-.0328	-.0336	-.0334	-.0343	-.0328	-.0319	-.0283	-.0324	-.0302
.95			-.0388	-.0364	-.0326	-.0299	-.0332	-.0315	-.0341	-.0312	-.0355	-.0324	-.0358	-.0337

TAIL 2

TABLE XXIV.- CONTINUED

(e) α = 3.80°

	Cp at y/b of													
	0.02		0.22		0.44		0.56		0.67		0.83		0.98	
x/c	U.S.	L.S.	U.S.	L.S.	U.S.	L.S.	U.S.	L.S.	U.S.	L.S.	U.S.	L.S.	U.S.	L.S.
.05			.3478	.0440	.3399	.0451	.3559	.0522						
.10	.1346	.0239	.3586	.0402	.3688	.0414			.4015	.0463			.3874	.0337
.15	.1347	.0261	.3510	.0359	.3725	.0362			.3964	.0387			.3822	.0408
.20	.1429	.0259	.3387	.0311	.3773	.0325	.4195	.0227	.3957	.0345	.4001	.0330	.3697	.0322
.25	.0554	-.0161			.3803	.0297	.3859	.0299	.3960	.0310	.4055	.0306	.3515	.0252
.30	.0467	-.0219							.3920	.0279	.4002	.0274	.3331	.0200
.40	.0427	-.0345	.1096	-.0385	.1440	-.0424	.1568	-.0367	.1733	-.0314	.3854	.0209	.3152	.0165
.50			.0976	-.0449	.1316	-.0508	.1468	-.0481			.1821	-.0315	.2935	.0083
.60					.1316	-.0525	.1785	-.0306	.1424	-.0449	.1369	-.0527	.0077	-.0551
.70	.0496	-.0345	.0779	-.0416	.1278	-.0523	.1102	-.0502	.0275	-.0495	.0144	-.0529	-.0203	-.0537
.80	-.0147	-.0495	-.0053	-.0472			.0047	-.0482	.0087	-.0451	-.0001	-.0524	-.0249	-.0532
.90	-.0360	-.0523	-.0257	-.0473	.0056	-.0385	-.0057	-.0483	-.0010	-.0511	-.0051	-.0522		
.95	-.0367	-.0534	-.0299	-.0478			-.0104	-.0482	-.0047	-.0515	-.0092	-.0522	-.0261	-.0484

TAIL 1

	Cp at y/b of													
	0.02		0.22		0.44		0.56		0.67		0.83		0.98	
x/c	U.S.	L.S.	U.S.	L.S.	U.S.	L.S.	U.S.	L.S.	U.S.	L.S.	U.S.	L.S.	U.S.	L.S.
.05	.0475	.0757	.1583	.1907			.1678	.1989			.1664	.1637	.2065	.2045
.10	.0539	.0800					.1677	.2022	.1728	.2186			.1899	.1977
.15					.1638	.1911	.1639	.1990	.1661	.2003			.1667	.1877
.20	.0464	.0702					.1623	.1960	.1640	.1957			.1447	.1763
.25	-.0015	.0132	.0722	.1488	.1614	.1843	.1615	.1920	.1626	.1940	.1602	.1836	.1399	.1640
.30			.0205	.0364			.1561	.1778	.1611	.1893	.1639	.1870	.1310	.1551
.40									.0400	.0543	.1534	.1697	.1316	.1414
.50					.0135	.0256	.0133	.0263	.0181	.0323	.0312	.0450	.1100	.1021
.60	.0166	.0242	-.0071	.0053			.0077	.0190	.0115	.0259	-.0042	.0073	-.0401	-.0381
.70					-.0005	.0104	-.0243	-.0179	-.0389	-.0283	-.0479	-.0388	-.0423	-.0364
.80	-.0175	-.0183	-.0459	-.0439	-.0385	-.0403	-.0403	-.0446			-.0404	-.0445		
.90	-.0232	-.0251	-.0407	-.0388	-.0350	-.0339	-.0358	-.0355	-.0361	-.0344	-.0330	-.0302	-.0341	-.0329
.95			-.0404	-.0378	-.0340	-.0309	-.0350	-.0333	-.0360	-.0332	-.0366	-.0344	-.0379	-.0358

TAIL 2

TABLE XXIV.- CONTINUED

(f) α = 5.80°

	Cp at y/b of													
	0.02		0.22		0.44		0.56		0.67		0.83		0.98	
x/c	U.S.	L.S.	U.S.	L.S.	U.S.	L.S.	U.S.	L.S.	U.S.	L.S.	U.S.	L.S.	U.S.	L.S.
.05			.2595	.0700	.2650	.0713	.2802	.0770						
.10	.0937	.0367	.2669	.0678	.2912	.0680			.3189	.0724			.3071	.0542
.15	.0913	.0387	.2623	.0640	.2927	.0633			.3159	.0650			.3008	.0622
.20	.0982	.0398	.2540	.0604	.2973	.0602	.3411	.0398	.3165	.0609	.3210	.0574	.2918	.0522
.25	.0327	-.0084			.2924	.0571	.3051	.0563	.3175	.0575	.3266	.0560	.2761	.0418
.30	.0249	-.0154							.3133	.0542	.3229	.0531	.2600	.0342
.40	.0148	-.0273	.0652	-.0310	.0972	-.0334	.1078	-.0267	.1328	-.0190	.3104	.0459	.2479	.0269
.50			.0544	-.0370	.0853	-.0424	.0975	-.0397			.1349	-.0210	.2258	.0182
.60					.0821	-.0447	.1328	-.0277	.0967	-.0379	.0951	-.0456	-.0103	-.0532
.70	.0152	-.0309	.0428	-.0355	.0797	-.0469	.0690	-.0493	.0069	-.0489	-.0060	-.0516	-.0278	-.0518
.80	-.0301	-.0468	-.0201	-.0460			-.0119	-.0468	-.0092	-.0438	-.0184	-.0507	-.0287	-.0520
.90	-.0380	-.0498	-.0354	-.0453	-.0073	-.0375	-.0207	-.0465	-.0206	-.0493	-.0227	-.0506		
.95	-.0380	-.0529	-.0388	-.0458			-.0244	-.0462	-.0235	-.0496	-.0261	-.0505	-.0291	-.0467

TAIL 1

	Cp at y/b of													
	0.02		0.22		0.44		0.56		0.67		0.83		0.98	
x/c	U.S.	L.S.	U.S.	L.S.	U.S.	L.S.	U.S.	L.S.	U.S.	L.S.	U.S.	L.S.	U.S.	L.S.
.05	.0581	.0996	.1588	.1868			.1676	.1978			.1627	.1588	.2029	.1987
.10	.0598	.0994					.1678	.2010	.1709	.2136			.1827	.1948
.15					.1650	.1903	.1645	.1982	.1647	.1979			.1597	.1861
.20	.0471	.0828					.1628	.1945	.1625	.1933			.1411	.1763
.25	-.0082	.0147	.0708	.1507	.1623	.1839	.1616	.1901	.1615	.1918	.1578	.1809	.1362	.1633
.30			.0209	.0381			.1563	.1760	.1597	.1859	.1610	.1852	.1305	.1549
.40									.0398	.0527	.1510	.1672	.1318	.1413
.50					.0129	.0249	.0137	.0250	.0182	.0306	.0298	.0435	.1078	.1023
.60	-.0037	.0075	-.0106	.0036			.0075	.0177	.0120	.0245	-.0044	.0055	-.0405	-.0385
.70					.0001	.0093	-.0243	-.0192	-.0396	-.0288	-.0489	-.0395	-.0436	-.0377
.80	-.0358	-.0331	-.0443	-.0446	-.0432	-.0419	-.0457	-.0471			-.0438	-.0456		
.90	-.0378	-.0359	-.0417	-.0390	-.0384	-.0390	-.0395	-.0398	-.0391	-.0370	-.0356	-.0331	-.0364	-.0342
.95			-.0421	-.0390	-.0372	-.0349	-.0388	-.0371	-.0391	-.0357	-.0394	-.0369	-.0400	-.0367

TAIL 2

TABLE XXIV.- CONTINUED

(g) α = 7.80°

	Cp at y/b of													
	0.02		0.22		0.44		0.56		0.67		0.83		0.98	
x/c	U.S.	L.S.	U.S.	L.S.	U.S.	L.S.	U.S.	L.S.	U.S.	L.S.	U.S.	L.S.	U.S.	L.S.
.05			.1737	.0956	.1907	.0984	.1983	.1033						
.10	.0409	.0503	.1798	.0950	.2122	.0961			.2281	.1004			.2520	.0824
.15	.0444	.0523	.1781	.0918	.2173	.0924			.2252	.0933			.2433	.0890
.20	.0477	.0521	.1734	.0887	.2212	.0898	.2699	.0630	.2283	.0838	.2419	.0864	.2346	.0774
.25	.0013	-.0052			.2192	.0864	.2297	.0855	.2331	.0863	.2442	.0857	.2199	.0642
.30	-.0063	-.0092							.2329	.0829	.2332	.0827	.2039	.0539
.40	-.0097	-.0163	.0279	-.0215	.0582	-.0212	.0668	-.0144	.0920	-.0046	.2268	.0745	.1891	.0452
.50			.0181	-.0274	.0461	-.0306	.0541	-.0283			.0826	-.0079	.1681	.0358
.60					.0408	-.0332	.0930	-.0228	.0564	-.0279	.0502	-.0359	-.0249	-.0540
.70	.0004	-.0264	.0108	-.0275	.0352	-.0371	.0314	-.0441	-.0131	-.0519	-.0243	-.0511	-.0360	-.0534
.80	-.0338	-.0423	-.0345	-.0480			-.0288	-.0467	-.0225	-.0435	-.0334	-.0497	-.0361	-.0494
.90	-.0370	-.0475	-.0426	-.0454	-.0186	-.0363	-.0360	-.0461	-.0353	-.0488	-.0366	-.0497		
.95	-.0361	-.0526	-.0406	-.0454			-.0384	-.0458	-.0374	-.0491	-.0388	-.0497	-.0387	-.0493

TAIL 1

	Cp at y/b of													
	0.02		0.22		0.44		0.56		0.67		0.83		0.98	
x/c	U.S.	L.S.	U.S.	L.S.	U.S.	L.S.	U.S.	L.S.	U.S.	L.S.	U.S.	L.S.	U.S.	L.S.
.05	.0467	.0785	.1340	.1692			.1705	.1979			.1619	.1558	.2012	.1947
.10	.0527	.0871					.1706	.2011	.1710	.2112			.1770	.1928
.15					.1633	.1873	.1667	.1976	.1662	.1977			.1556	.1851
.20	.0419	.0744					.1639	.1942	.1638	.1936			.1386	.1755
.25	-.0133	.0096	.0517	.1319	.1628	.1790	.1621	.1898	.1625	.1921	.1574	.1795	.1369	.1627
.30			.0046	.0281			.1565	.1759	.1612	.1860	.1604	.1840	.1360	.1545
.40									.0396	.0537	.1509	.1652	.1295	.1415
.50					.0154	.0245	.0148	.0251	.0183	.0303	.0301	.0428	.1074	.1038
.60	-.0181	-.0023	-.0221	-.0067			.0092	.0189	.0129	.0236	-.0046	.0042	-.0405	-.0386
.70					.0017	.0115	-.0232	-.0180	-.0396	-.0296	-.0493	-.0405	-.0440	-.0388
.80	-.0462	-.0448	-.0546	-.0526	-.0469	-.0412	-.0509	-.0465			-.0452	-.0470		
.90	-.0490	-.0477	-.0518	-.0503	-.0446	-.0459	-.0431	-.0428	-.0403	-.0385	-.0366	-.0347	-.0370	-.0359
.95			-.0518	-.0497	-.0421	-.0411	-.0419	-.0397	-.0405	-.0373	-.0399	-.0383	-.0407	-.0386

TAIL 2

TABLE XXIV.- CONTINUED

(h) α = 9.80°

	Cp at y/b of													
	0.02		0.22		0.44		0.56		0.67		0.83		0.98	
x/c	U.S.	L.S.	U.S.	L.S.	U.S.	L.S.	U.S.	L.S.	U.S.	L.S.	U.S.	L.S.	U.S.	L.S.
.05			.1288	.1232	.1500	.1275	.1680	.1343						
.10	.0173	.0682	.1230	.1234	.1587	.1270			.1953	.1345			.2210	.1200
.15	.0196	.0714	.1128	.1200	.1578	.1239			.1902	.1273			.2119	.1214
.20	.0166	.0703	.1040	.1163	.1542	.1213	.2055	.0931	.1878	.1234	.2090	.1203	.2038	.1070
.25	-.0205	.0009			.1491	.1179	.1674	.1184	.1870	.1199	.2099	.1202	.1905	.0925
.30	-.0275	-.0001							.1821	.1160	.2038	.1171	.1758	.0812
.40	-.0251	-.0029	.0025	-.0108	.0222	-.0079	.0318	.0002	.0579	.0123	.1920	.1077	.1610	.0734
.50			-.0062	-.0165	.0118	-.0173	.0182	-.0142			.0616	.0081	.1409	.0615
.60					.0089	-.0203	.0564	-.0152	.0241	-.0153	.0291	-.0226	-.0319	-.0524
.70	-.0066	-.0200	-.0097	-.0177	.0044	-.0248	.0009	-.0349	-.0286	-.0509	-.0359	-.0564	-.0401	-.0579
.80	-.0357	-.0367	-.0436	-.0492			-.0404	-.0480	-.0341	-.0445	-.0442	-.0518	-.0440	-.0538
.90	-.0361	-.0446	-.0409	-.0460	-.0235	-.0363	-.0425	-.0457	-.0457	-.0486	-.0468	-.0500		
.95	-.0358	-.0479	-.0405	-.0455			-.0403	-.0454	-.0441	-.0485	-.0464	-.0495	-.0431	-.0467

TAIL 1

	Cp at y/b of													
	0.02		0.22		0.44		0.56		0.67		0.83		0.98	
x/c	U.S.	L.S.	U.S.	L.S.	U.S.	L.S.	U.S.	L.S.	U.S.	L.S.	U.S.	L.S.	U.S.	L.S.
.05	.0355	.0734	.0705	.1044			.1694	.1984			.1628	.1563	.2010	.1937
.10	.0385	.0813					.1710	.1989	.1708	.2106			.1745	.1931
.15					.1573	.1729	.1677	.1928	.1659	.1987			.1546	.1859
.20	.0256	.0626					.1662	.1920	.1651	.1921			.1386	.1766
.25	-.0240	-.0011	.0026	.0673	.1572	.1700	.1656	.1890	.1645	.1895	.1571	.1799	.1395	.1642
.30			-.0250	-.0011			.1613	.1767	.1633	.1853	.1593	.1845	.1383	.1558
.40									.0420	.0521	.1496	.1655	.1305	.1441
.50					.0077	.0183	.0162	.0250	.0207	.0303	.0307	.0417	.1097	.1060
.60	-.0280	-.0131	-.0355	-.0220			.0102	.0182	.0152	.0251	-.0036	.0038	-.0403	-.0382
.70					-.0079	.0009	-.0229	-.0179	-.0391	-.0296	-.0489	-.0404	-.0445	-.0398
.80	-.0513	-.0504	-.0608	-.0577	-.0514	-.0463	-.0534	-.0482			-.0469	-.0471		
.90	-.0571	-.0549	-.0596	-.0568	-.0551	-.0536	-.0487	-.0494	-.0421	-.0424	-.0373	-.0356	-.0375	-.0365
.95			-.0597	-.0567	-.0510	-.0505	-.0462	-.0452	-.0423	-.0402	-.0402	-.0389	-.0413	-.0395

TAIL 2

TABLE XXIV.- CONTINUED

(i) α = 11.80°

	Cp at y/b of													
	0.02		0.22		0.44		0.56		0.67		0.83		0.98	
x/c	U.S.	L.S.	U.S.	L.S.	U.S.	L.S.	U.S.	L.S.	U.S.	L.S.	U.S.	L.S.	U.S.	L.S.
.05			.1215	.1550	.1392	.1602	.1570	.1687						
.10	.0095	.0908	.1130	.1558	.1473	.1620			.1797	.1718			.2028	.1651
.15	.0083	.0956	.1007	.1519	.1457	.1592	.		.1741	.1650			.1930	.1582
.20	-.0002	.0937	.0881	.1472	.1418	.1564	.1726	.1275	.1712	.1612	.1909	.1588	.1856	.1417
.25	-.0320	.0106			.1353	.1526	.1512	.1540	.1696	.1574	.1907	.1595	.1733	.1271
.30	-.0387	.0118							.1644	.1532	.1842	.1560	.1594	.1156
.40	-.0357	.0145	-.0127	.0014	.0113	.0076	.0218	.0172	.0459	.0319	.1722	.1453	.1452	.1081
.50			-.0253	-.0041	-.0014	-.0015	.0079	.0020			.0507	.0269	.1250	.0929
.60					-.0083	-.0047	.0343	-.0061	.0131	.0006	.0191	-.0067	-.0361	-.0493
.70	-.0132	-.0114	-.0258	-.0062	-.0152	-.0100	-.0107	-.0232	-.0354	-.0449	-.0415	-.0547	-.0431	-.0558
.80	-.0359	-.0303	-.0437	-.0461			-.0476	-.0524	-.0400	-.0488	-.0493	-.0564	-.0478	-.0579
.90	-.0396	-.0441	-.0421	-.0492	-.0264	-.0377	-.0447	-.0495	-.0481	-.0511	-.0493	-.0509		
.95	-.0390	-.0453	-.0424	-.0476			-.0433	-.0476	-.0460	-.0497	-.0462	-.0495	-.0441	-.0434

TAIL 1

	Cp at y/b of													
	0.02		0.22		0.44		0.56		0.67		0.83		0.98	
x/c	U.S.	L.S.	U.S.	L.S.	U.S.	L.S.	U.S.	L.S.	U.S.	L.S.	U.S.	L.S.	U.S.	L.S.
.05	.0278	.0651	.0171	.0408			.1588	.1773			.1638	.1576	.2040	.1967
.10	.0312	.0718					.1586	.1775	.1710	.2087			.1746	.1963
.15					.0900	.1135	.1549	.1756	.1695	.1961			.1541	.1887
.20	.0170	.0521					.1522	.1749	.1683	.1916			.1369	.1783
.25	-.0299	-.0080	-.0148	.0269	.0811	.1054	.1513	.1731	.1680	.1906	.1582	.1811	.1387	.1647
.30			-.0339	-.0138			.1482	.1629	.1677	.1876	.1614	.1842	.1384	.1543
.40									.0441	.0512	.1520	.1663	.1316	.1413
.50					-.0185	-.0110	.0010	.0113	.0220	.0306	.0320	.0422	.1120	.1050
.60	-.0347	-.0217	-.0413	-.0301			-.0078	.0007	.0153	.0253	-.0017	.0044	-.0401	-.0391
.70					-.0348	-.0287	-.0353	-.0302	-.0395	-.0303	-.0485	-.0406	-.0452	-.0407
.80	-.0552	-.0542	-.0648	-.0612	-.0600	-.0564	-.0606	-.0557			-.0491	-.0477		
.90	-.0634	-.0615	-.0652	-.0635	-.0627	-.0614	-.0602	-.0583	-.0484	-.0488	-.0383	-.0379	-.0382	-.0373
.95			-.0652	-.0630	-.0597	-.0588	-.0577	-.0576	-.0473	-.0470	-.0406	-.0406	-.0421	-.0403

TAIL 2

TABLE XXIV.- CONTINUED

(j) α = 15.80°

	Cp at y/b of													
	0.02		0.22		0.44		0.56		0.67		0.83		0.98	
x/c	U.S.	L.S.	U.S.	L.S.	U.S.	L.S.	U.S.	L.S.	U.S.	L.S.	U.S.	L.S.	U.S.	L.S.
.05			.1266	.2363	.1391	.2429	.1556	.2565						
.10	.0142	.1498	.1155	.2382	.1475	.2491			.1738	.2657			.1322	.2631
.15	.0089	.1578	.1006	.2324	.1449	.2467			.1676	.2580			.1818	.2466
.20	-.0051	.1547	.0852	.2260	.1391	.2431	.1593	.1954	.1637	.2537	.1802	.2528	.1743	.2312
.25	-.0368	.0393			.1309	.2393	.1441	.2435	.1615	.2499	.1789	.2548	.1622	.2174
.30	-.0441	.0446							.1556	.2444	.1714	.2503	.1597	.2054
.40	-.0437	.0659	-.0170	.0334	.0076	.0476	.0178	.0602	.0388	.0806	.1585	.2357	.1344	.1943
.50			-.0309	.0295	-.0067	.0392	.0029	.0448			.0426	.0739	.1144	.1715
.60					-.0143	.0355	.0242	.0148	.0079	.0443	.0120	.0340	-.0386	-.0368
.70	-.0243	.0144	-.0353	.0278	-.0216	.0293	-.0162	.0084	-.0380	-.0273	-.0452	-.0416	-.0448	-.0435
.80	-.0392	-.0110	-.0438	-.0300			-.0494	-.0412	-.0416	-.0449	-.0483	-.0495	-.0483	-.0472
.90	-.0379	-.0409	-.0441	-.0455	-.0291	-.0373	-.0452	-.0470	-.0458	-.0509	-.0421	-.0504		
.95	-.0376	-.0455	-.0445	-.0492			-.0442	-.0486	-.0443	-.0506	-.0404	-.0479	-.0359	-.0437

TAIL 1

	Cp at y/b of													
	0.02		0.22		0.44		0.56		0.67		0.83		0.98	
x/c	U.S.	L.S.	U.S.	L.S.	U.S.	L.S.	U.S.	L.S.	U.S.	L.S.	U.S.	L.S.	U.S.	L.S.
.05	.0026	.0402	.0094	.0306			.0335	.0470			.1506	.1377	.2000	.1927
.10	.0080	.0440					.0281	.0456	.1358	.1738			.1735	.1893
.15					.0109	.0299	.0259	.0442	.0489	.0697			.1526	.1799
.20	-.0054	.0257					.0197	.0394	.0368	.0571			.1368	.1702
.25	-.0415	-.0223	-.0280	.0075	.0000	.0180	.0170	.0355	.0312	.0530	.1376	.1439	.1351	.1577
.30			-.0435	-.0277			.0136	.0277	.0278	.0474	.1363	.1457	.1337	.1496
.40									-.0286	-.0187	.1241	.1310	.1303	.1374
.50					-.0366	-.0300	-.0392	-.0331	-.0391	-.0321	.0070	.0137	.1123	.1017
.60	-.0396	-.0274	-.0463	-.0364			-.0484	-.0436	-.0414	-.0346	-.0230	-.0188	-.0395	-.0399
.70					-.0491	-.0451	-.0578	-.0544	-.0494	-.0423	-.0575	-.0513	-.0442	-.0406
.80	-.0571	-.0555	-.0682	-.0648	-.0644	-.0614	-.0692	-.0662			-.0609	-.0569		
.90	-.0672	-.0651	-.0685	-.0666	-.0657	-.0629	-.0668	-.0646	-.0603	-.0589	-.0540	-.0495	-.0452	-.0418
.95			-.0686	-.0665	-.0639	-.0612	-.0659	-.0637	-.0612	-.0592	-.0593	-.0565	-.0516	-.0478

TAIL 2

TABLE XXIV. - CONCLUDED

(k) α = 19.80°

	Cp at y/b of													
	0.02		0.22		0.44		0.56		0.67		0.83		0.98	
x/c	U.S.	L.S.	U.S.	L.S.	U.S.	L.S.	U.S.	L.S.	U.S.	L.S.	U.S.	L.S.	U.S.	L.S.
.05			.1445	.3432	.1522	.3520	.1692	.3708						
.10	.0259	.2274	.1310	.3458	.1620	.3632			.1864	.3874			.1977	.3800
.15	.0169	.2374	.1135	.3362	.1591	.3601			.1785	.3785			.1863	.3621
.20	-.0038	.2345	.0941	.3220	.1513	.3557	.1604	.2970	.1735	.3742	.1858	.3741	.1783	.3500
.25	-.0378	.0823			.1421	.3505	.1531	.3534	.1701	.3692	.1834	.3771	.1659	.3369
.30	-.0452	.0928							.1633	.3616	.1753	.3708	.1524	.3231
.40	-.0458	.1350	-.0179	.0804	.0099	.1042	.0214	.1200	.0404	.1453	.1613	.3520	.1380	.3077
.50			-.0327	.0798	-.0058	.0959	.0053	.1044			.0435	.1372	.1189	.2742
.60					-.0138	.0892	.0209	.0529	.0085	.1049	.0125	.0914	-.0369	-.0153
.70	-.0314	.0597	-.0374	.0758	-.0216	.0780	-.0157	.0586	-.0384	-.0001	-.0455	-.0178	-.0441	-.0266
.80	-.0442	.0200	-.0463	-.0039			-.0466	-.0203	-.0382	-.0314	-.0412	-.0306	-.0432	-.0277
.90	-.0434	-.0266	-.0466	-.0301	-.0301	-.0290	-.0428	-.0310	-.0412	-.0373	-.0365	-.0347		
.95	-.0454	-.0365	-.0469	-.0362			-.0426	-.0341	-.0406	-.0393	-.0356	-.0366	-.0296	-.0281

TAIL 1

	Cp at y/b of													
	0.02		0.22		0.44		0.56		0.67		0.83		0.98	
x/c	U.S.	L.S.	U.S.	L.S.	U.S.	L.S.	U.S.	L.S.	U.S.	L.S.	U.S.	L.S.	U.S.	L.S.
.05	-.0213	.0003	-.0076	.0092			.0024	.0181			.0455	.0540	.0577	.0653
.10	-.0125	.0096					-.0006	.0171	.0975	.1391			.0456	.0551
.15					-.0091	.0057	-.0025	.0162	.0106	.0335			.0333	.0480
.20	-.0224	-.0047					-.0055	.0125	.0013	.0227			.0212	.0401
.25	-.0495	-.0371	-.0352	-.0095	-.0183	-.0047	-.0067	.0099	-.0011	.0199	.0216	.0408	.0155	.0332
.30			-.0482	-.0362			-.0087	.0040	-.0022	.0176	.0172	.0376	.0098	.0289
.40									-.0400	-.0293	.0099	.0281	.0051	.0226
.50					-.0408	-.0344	-.0453	-.0387	-.0457	-.0374	-.0322	-.0225	-.0051	.0064
.60	-.0419	-.0310	-.0487	-.0397			-.0534	-.0477	-.0460	-.0388	-.0459	-.0395	-.0586	-.0524
.70					-.0511	-.0462	-.0612	-.0568	-.0539	-.0463	-.0643	-.0581	-.0557	-.0487
.80	-.0571	-.0556	-.0695	-.0660	-.0646	-.0614	-.0706	-.0670			-.0661	-.0615		
.90	-.0680	-.0656	-.0697	-.0672	-.0661	-.0638	-.0678	-.0658	-.0635	-.0605	-.0595	-.0543	-.0568	-.0518
.95			-.0698	-.0671	-.0644	-.0618	-.0672	-.0648	-.0651	-.0616	-.0643	-.0603	-.0645	-.0594

TAIL 2

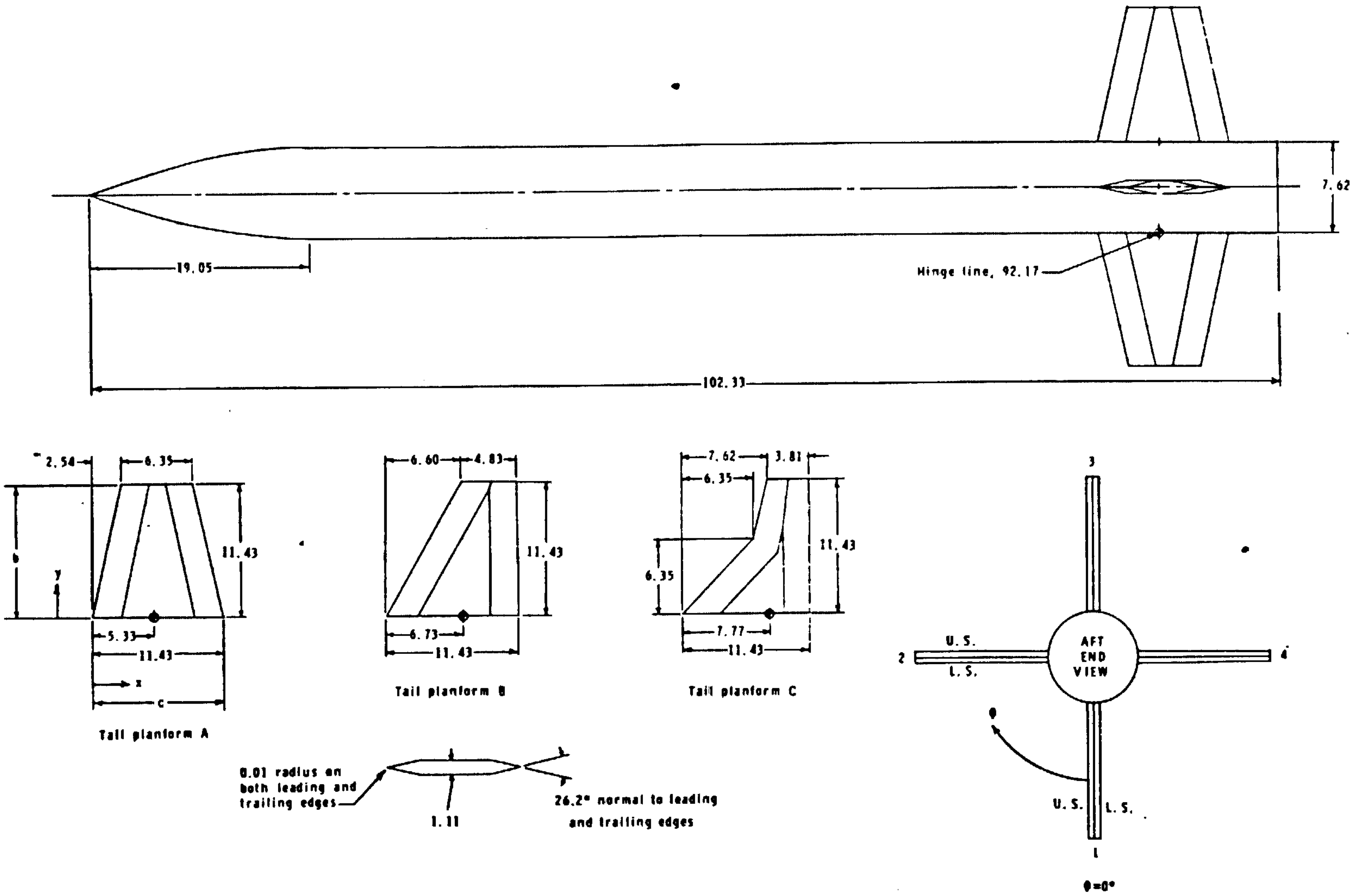
7.62
Hinge line, 92.17
19.05
102.33
2.54
6.35
11.43
b
y
5.33
11.43
x
c
Tail planform A
6.60
4.83
11.43
6.73
11.43
Tail planform B
7.62
3.81
6.35
11.43
6.35
7.77
11.43
Tail planform C
0.01 radius on both leading and trailing edges
1.11
26.2° normal to leading and trailing edges
3
U. S.
L. S.
2
AFT END VIEW
4
ϕ
U. S.
L. S.
1
$\phi = 0°$

Figure 1.- Details of model. All linear dimensions are in centimeters.

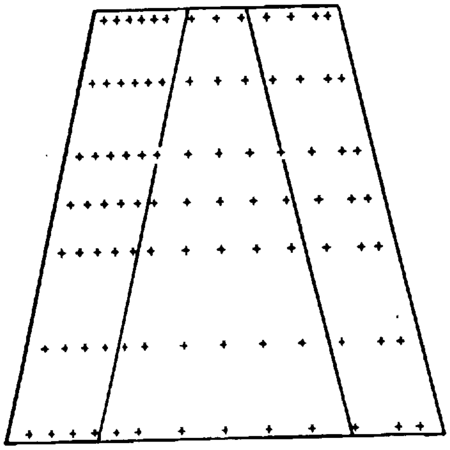

Tail planform A

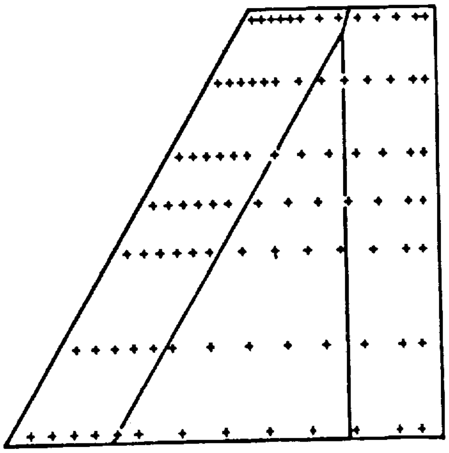

Tail planform B

+ pressure orifices

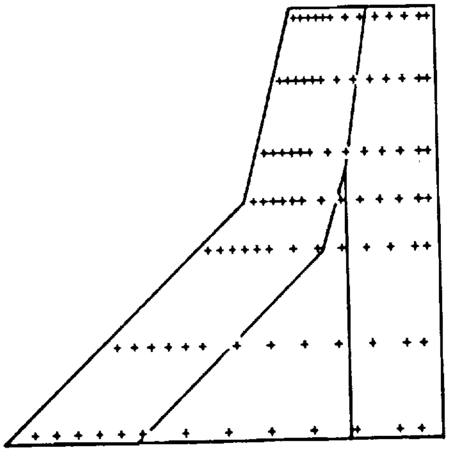

Tail planform C

x/c	y/b						
0.05	0.02	0.22	0.44	0.56	0.67	0.83	0.98
.10	.02	.22	.44	.56	.67	.83	.98
.15	.02	.22	.44	.56	.67	.83	.98
.20	.02	.22	.44	.56	.67	.83	.98
.25	.02	.22	.44	.56	.67	.83	.98
.30	.02	.22	.44	.56	.67	.83	.98
.40	.02	.22	.44	.56	.67	.83	.98
.50	.02	.22	.44	.56	.67	.83	.98
.60	.02	.22	.44	.56	.67	.83	.98
.70	.02	.22	.44	.56	.67	.83	.98
.80	.02	.22	.44	.56	.67	.83	.98
.90	.02	.22	.44	.56	.67	.83	.98
.95	.02	.22	.44	.56	.67	.83	.98

Figure 2.- Details of pressure orifice locations.

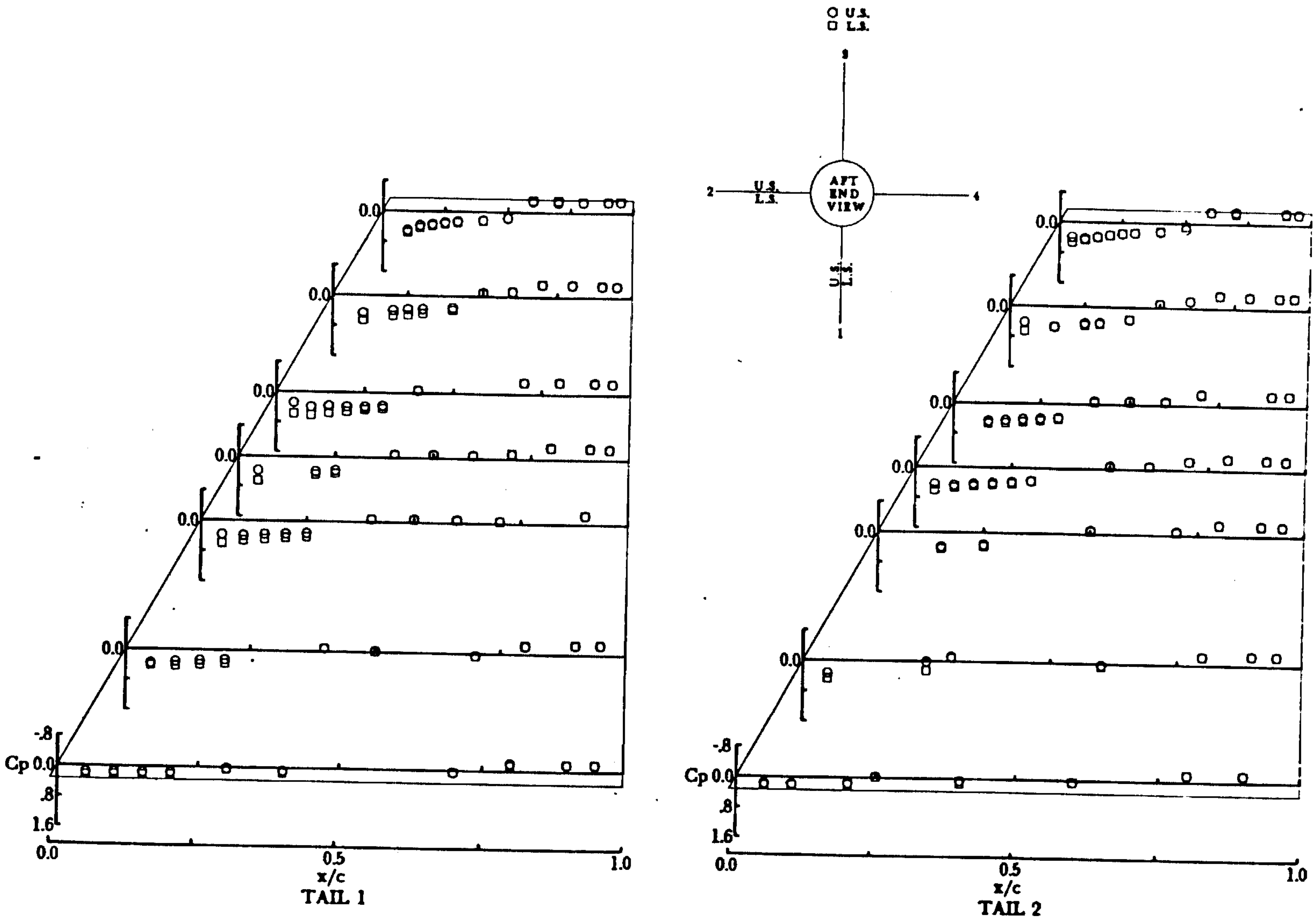

(a) α = 0.66°.

Figure 3.- Pressure coefficients for tail planform B at M = 1.60, ϕ = 0°, and δ = 0°.

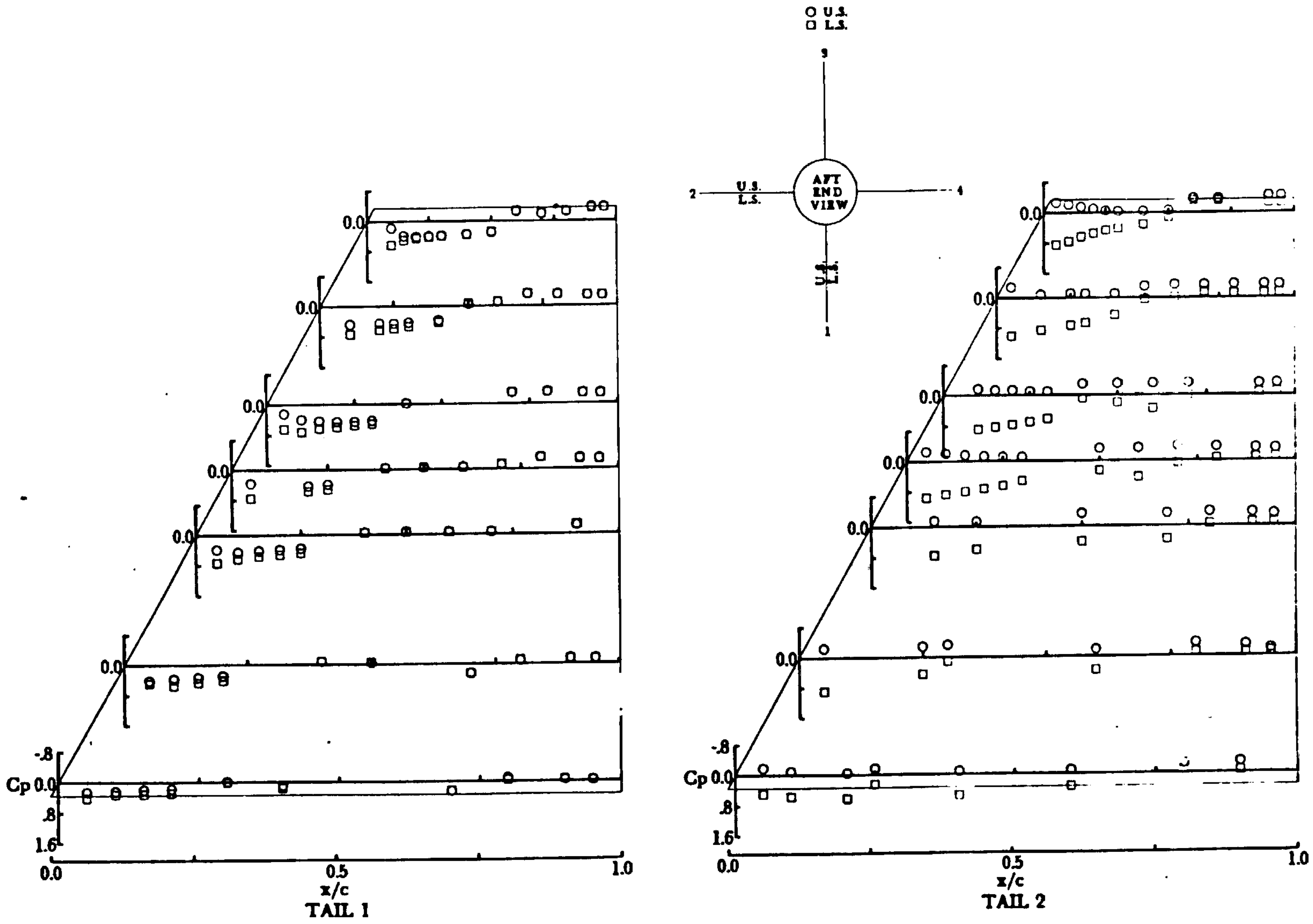

(b) α = 10.68°.

Figure 3.- Continued.

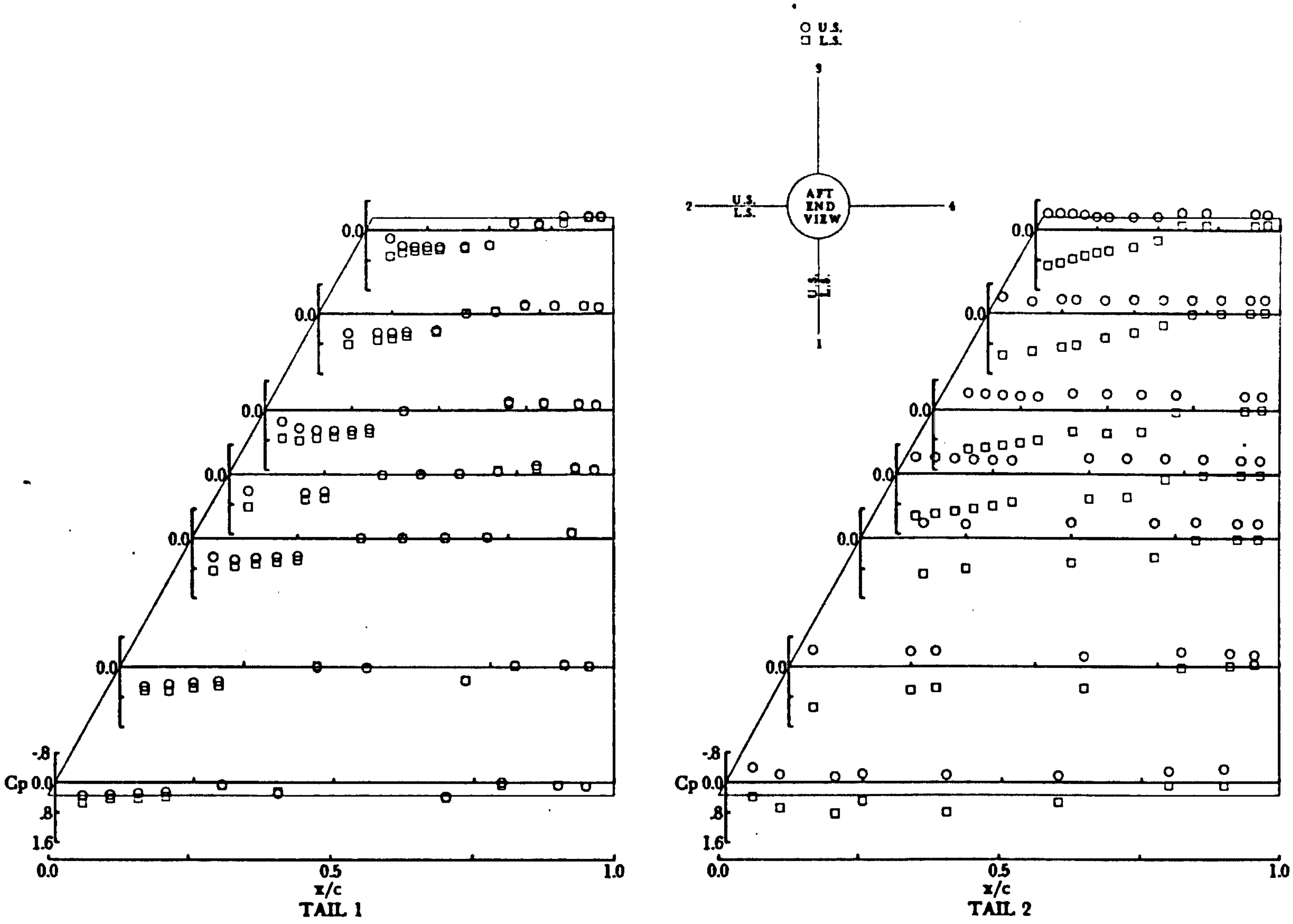

(c) α = 18.67°.

Figure 3.- Concluded.

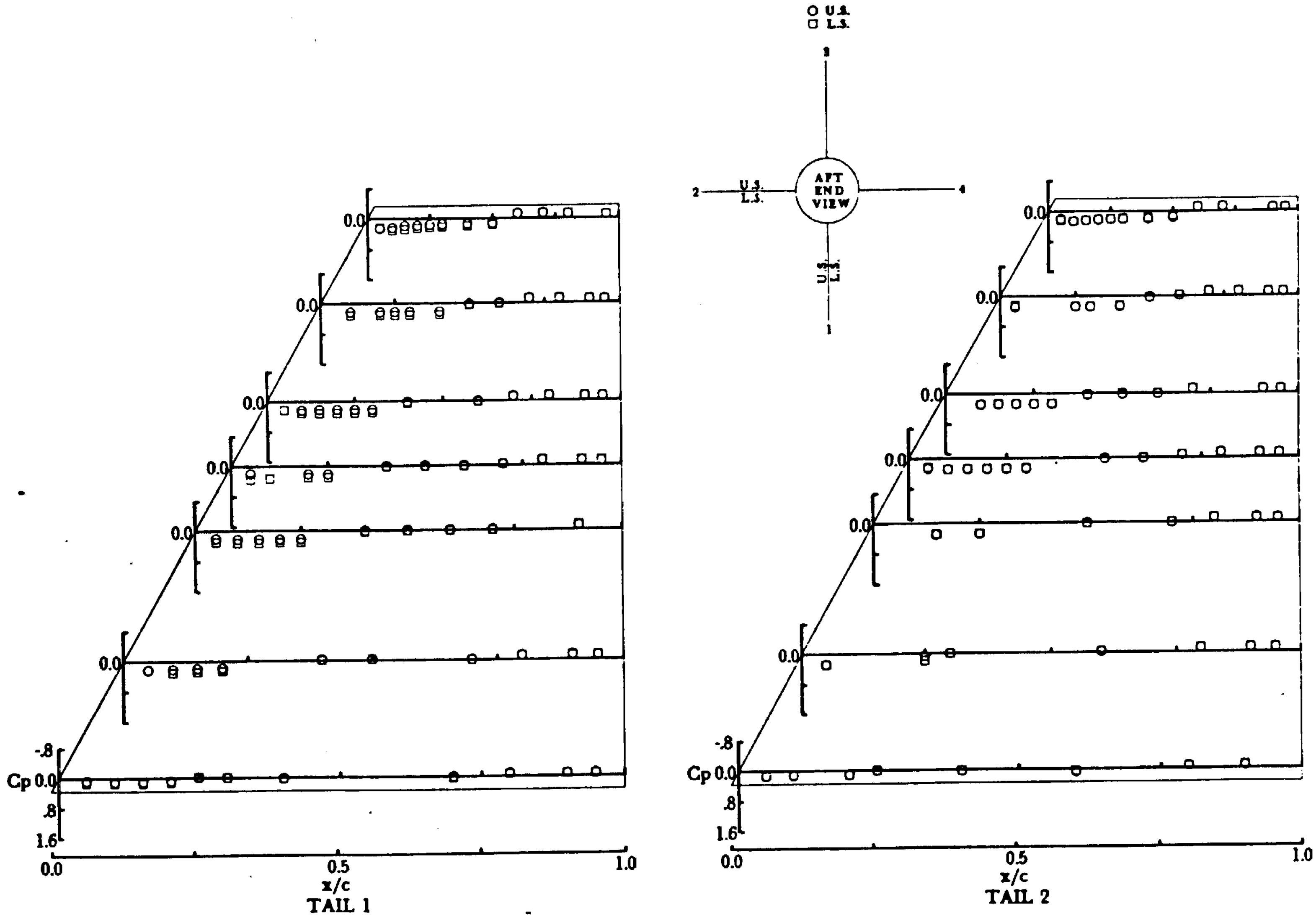

(a) α = -0.08°.

Figure 4.- Pressure coefficients for tail planform B at M = 2.36, ϕ = 0°, and δ = 0°.

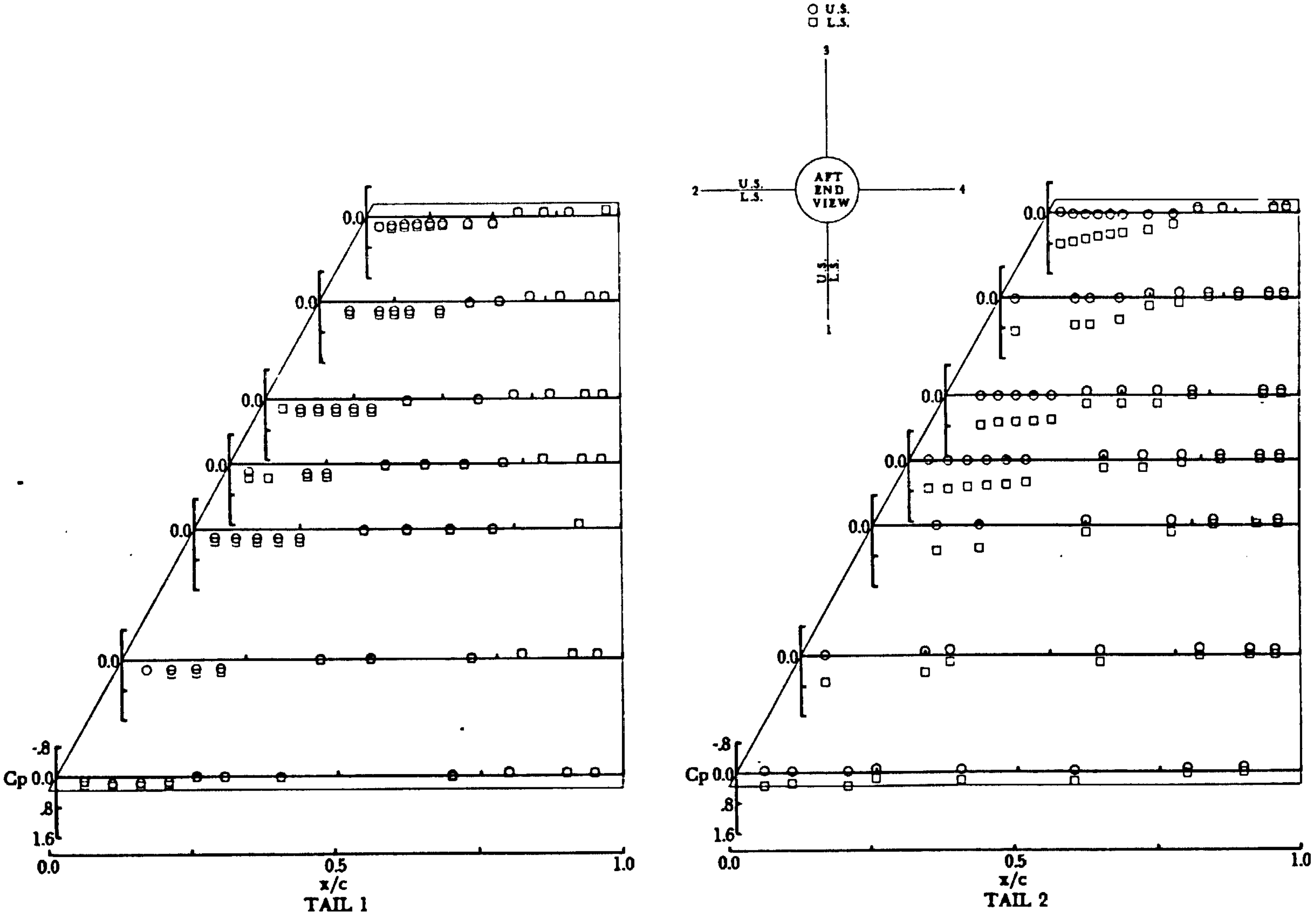

(b) α = 9.92°.

Figure 4.- Continued.

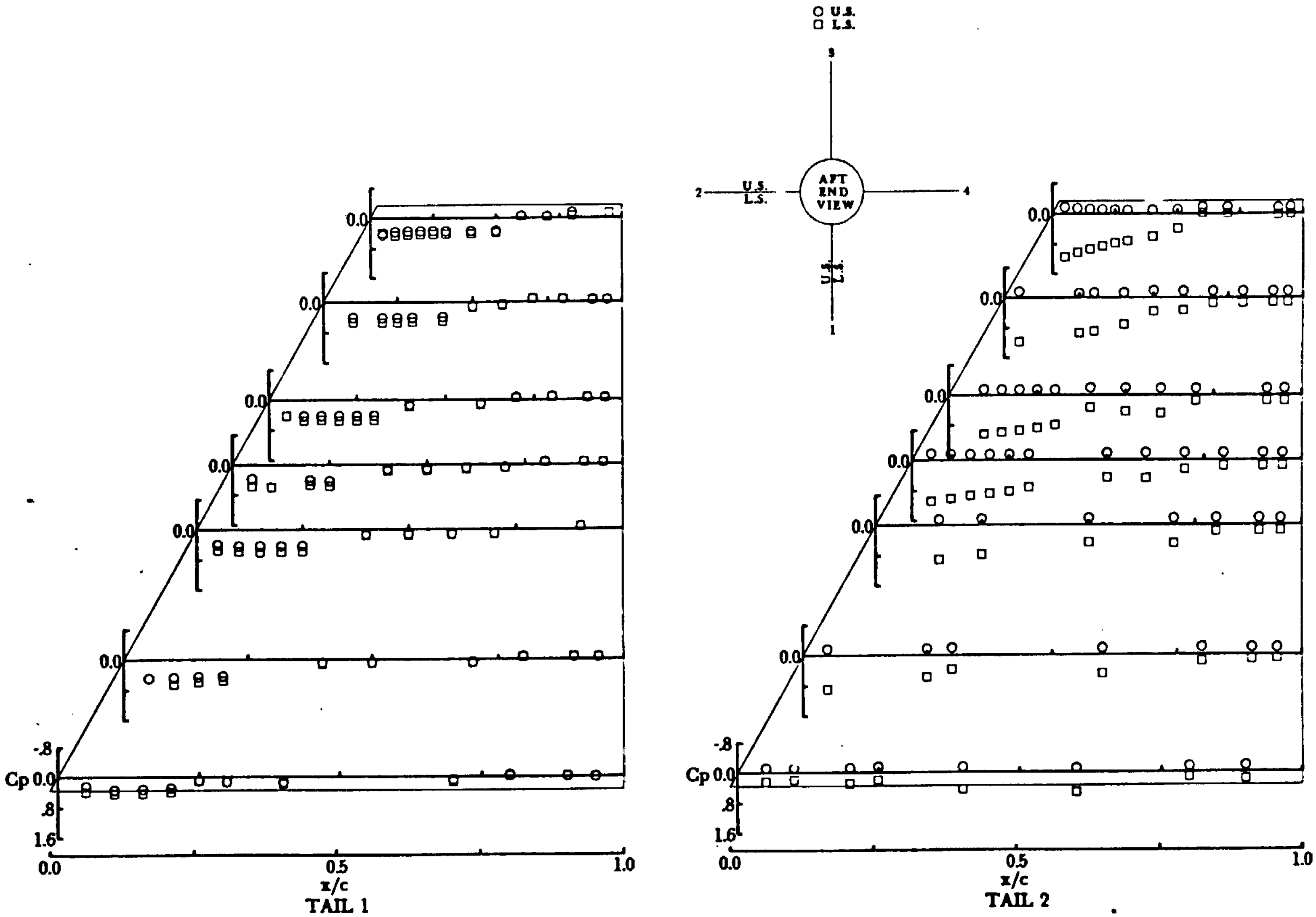

(c) α = 19.92°.

Figure 4.- Concluded.

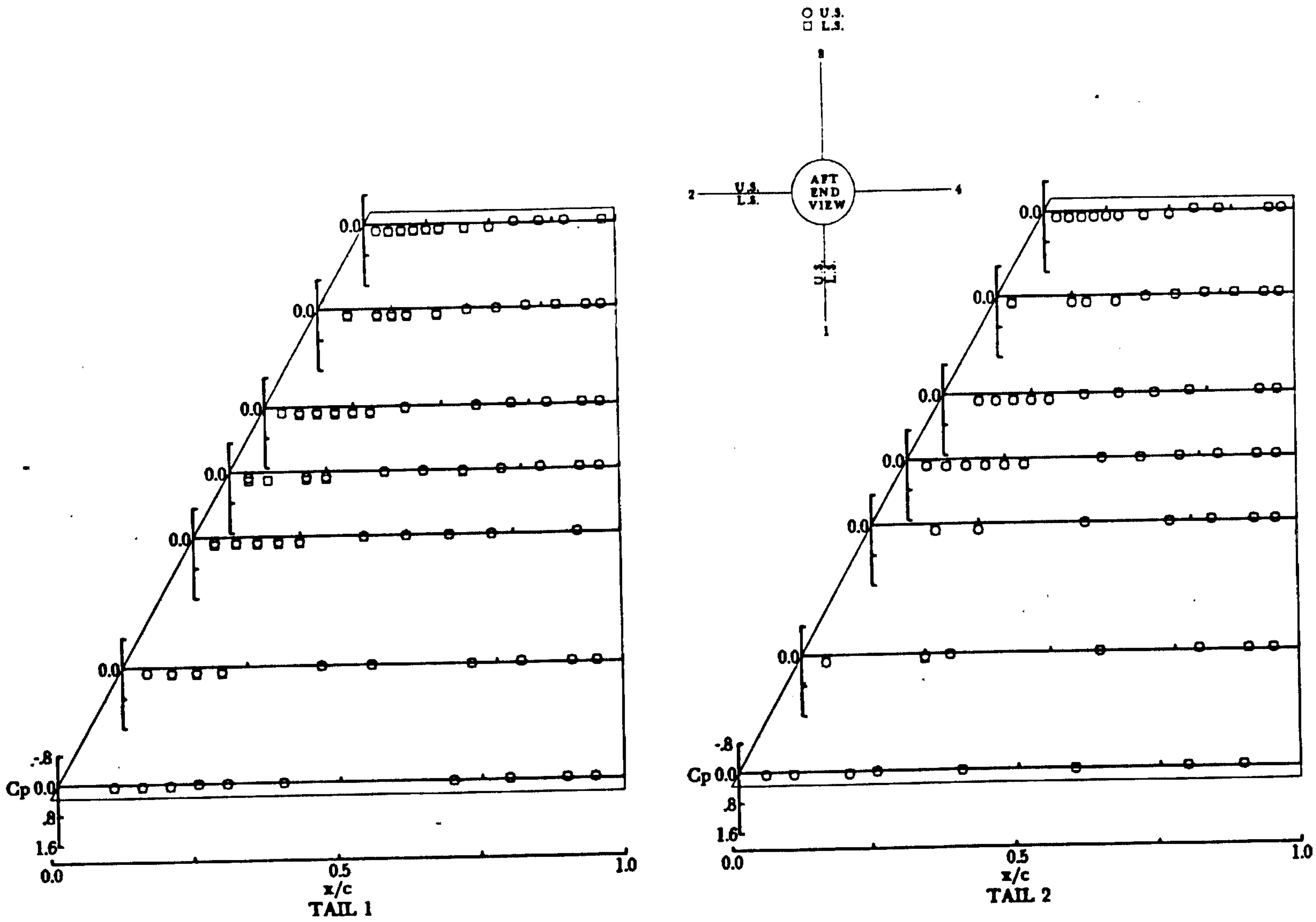

(a) $\alpha = -0.15^{\circ}$.

Figure 5.- Pressure coefficients for tail planform B at $M = 3.70$, $\phi = 0^{\circ}$, and $\delta = 0^{\circ}$.

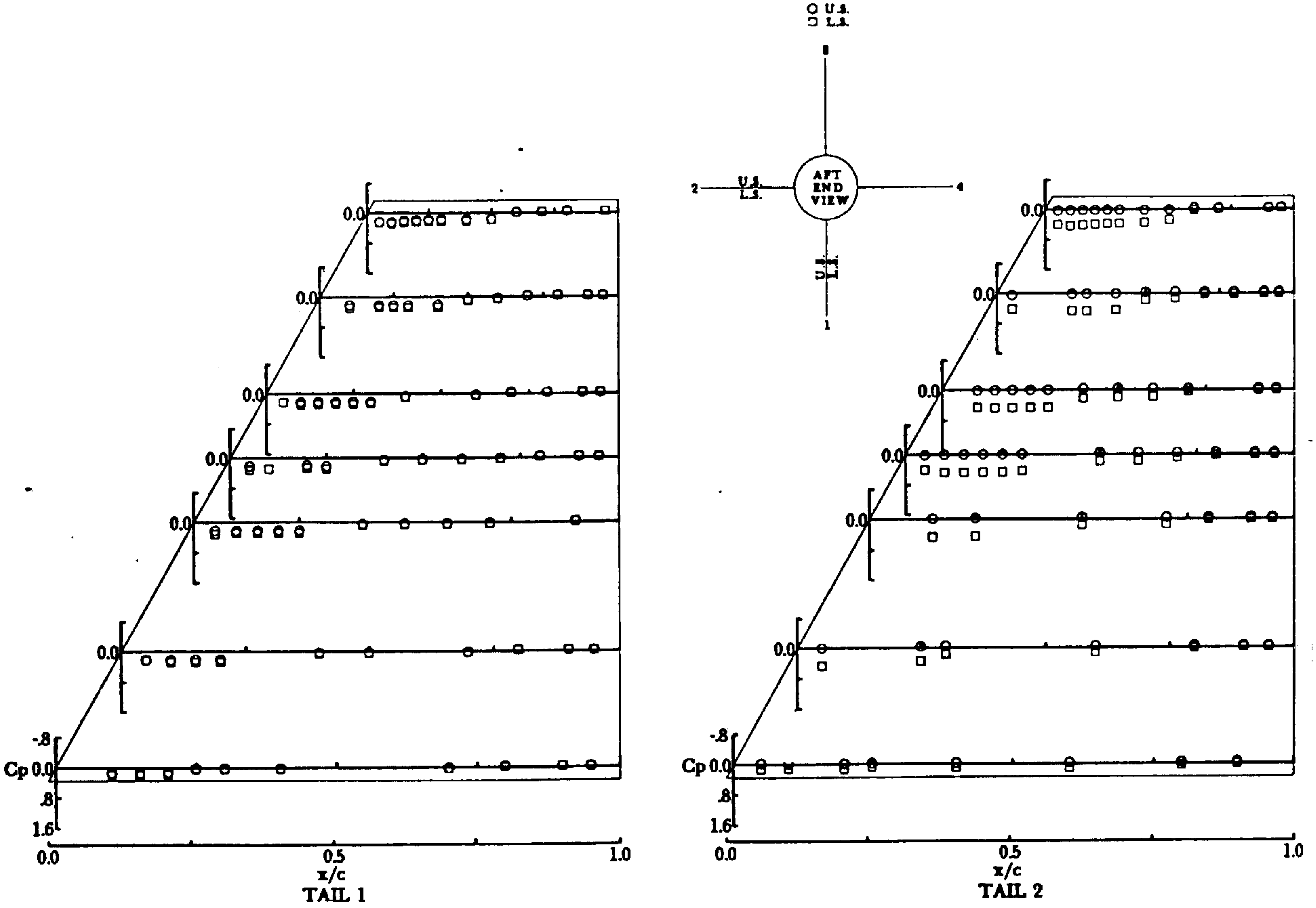

(b) α = 9.85°.

Figure 5.- Continued.

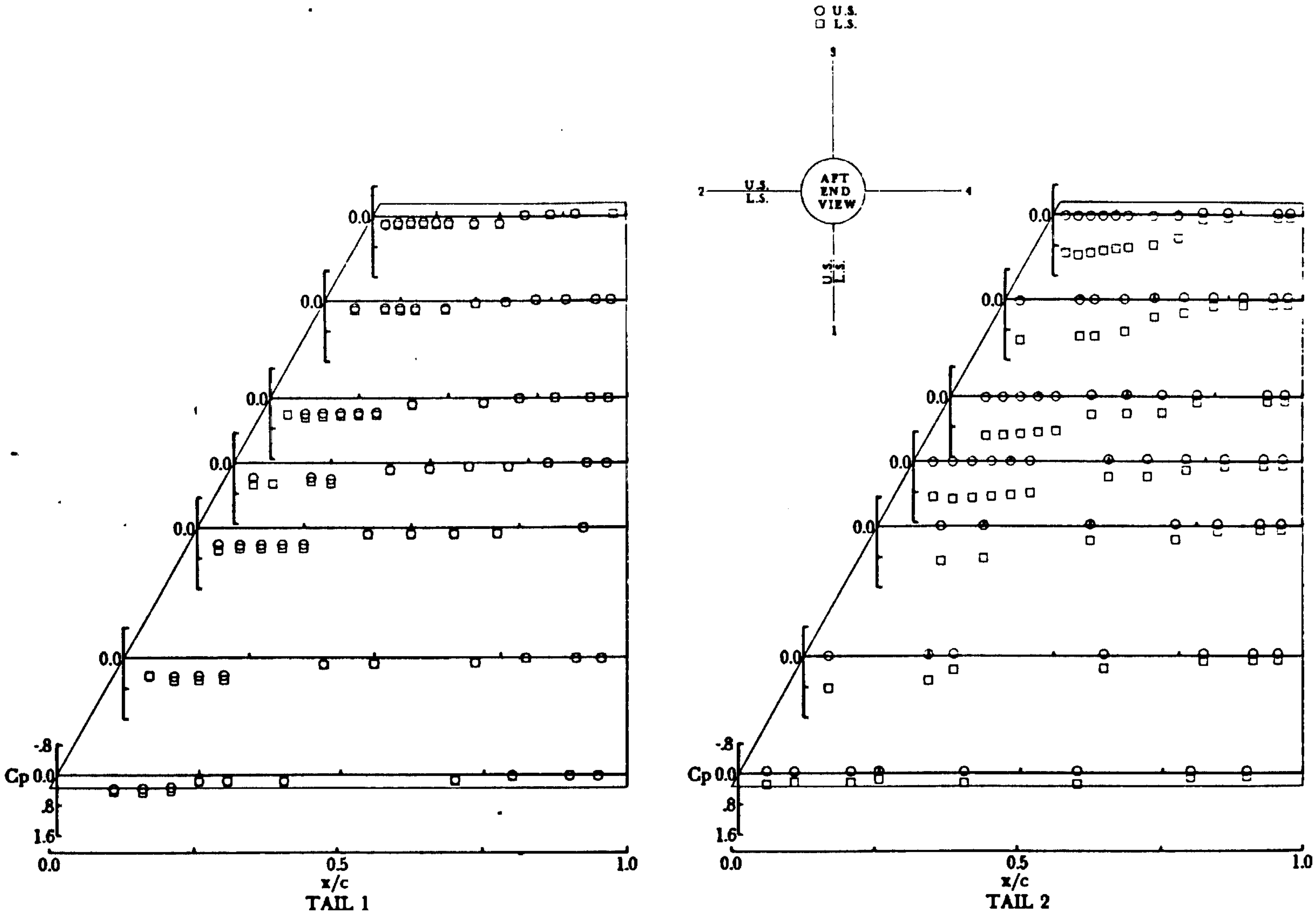

(c) α = 19.95°.

Figure 5.- Concluded.

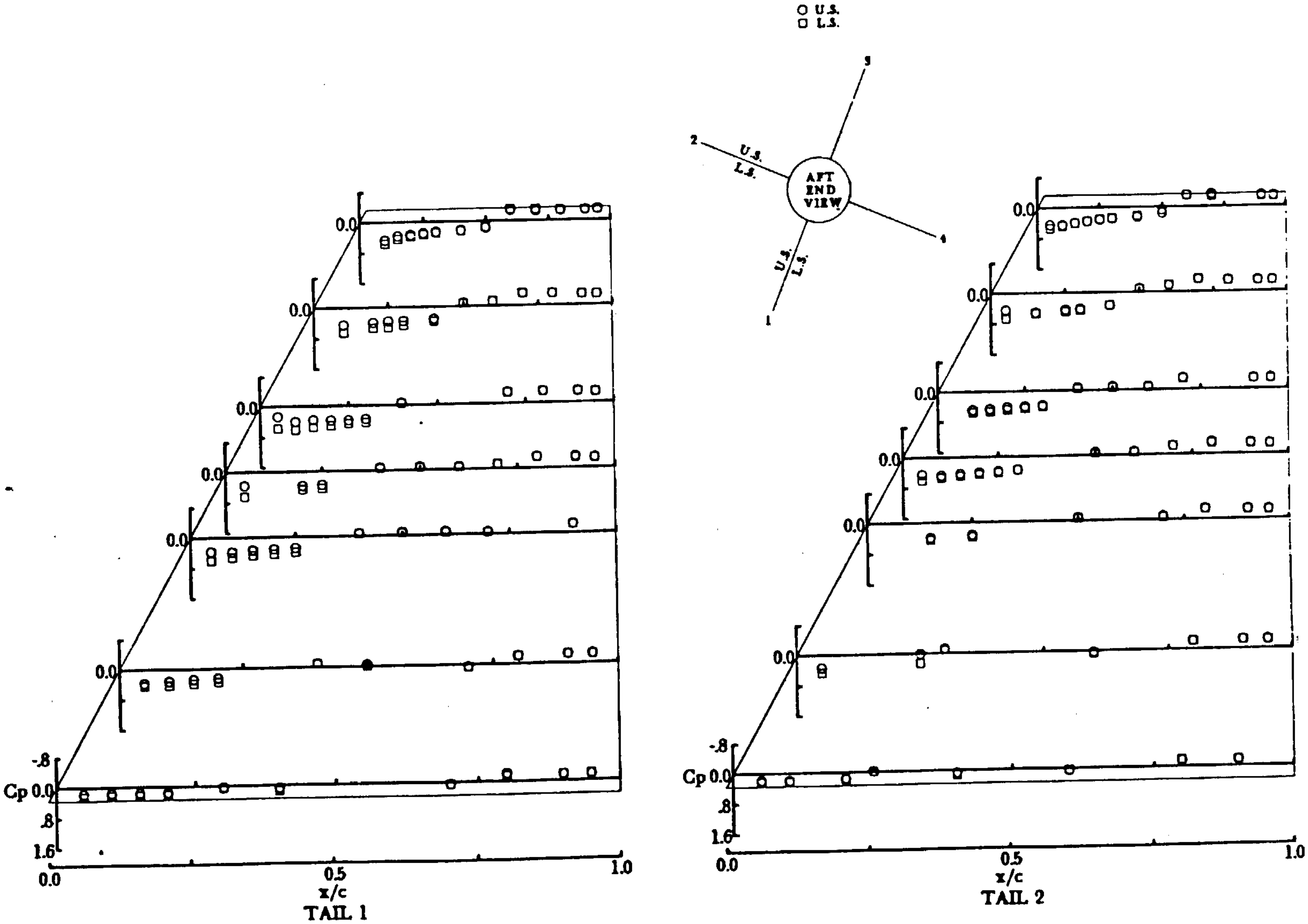

(a) α = 0.78°.

Figure 6.- Pressure coefficients for tail planform B at M = 1.60, ϕ = 22.5°, and δ = 0°.

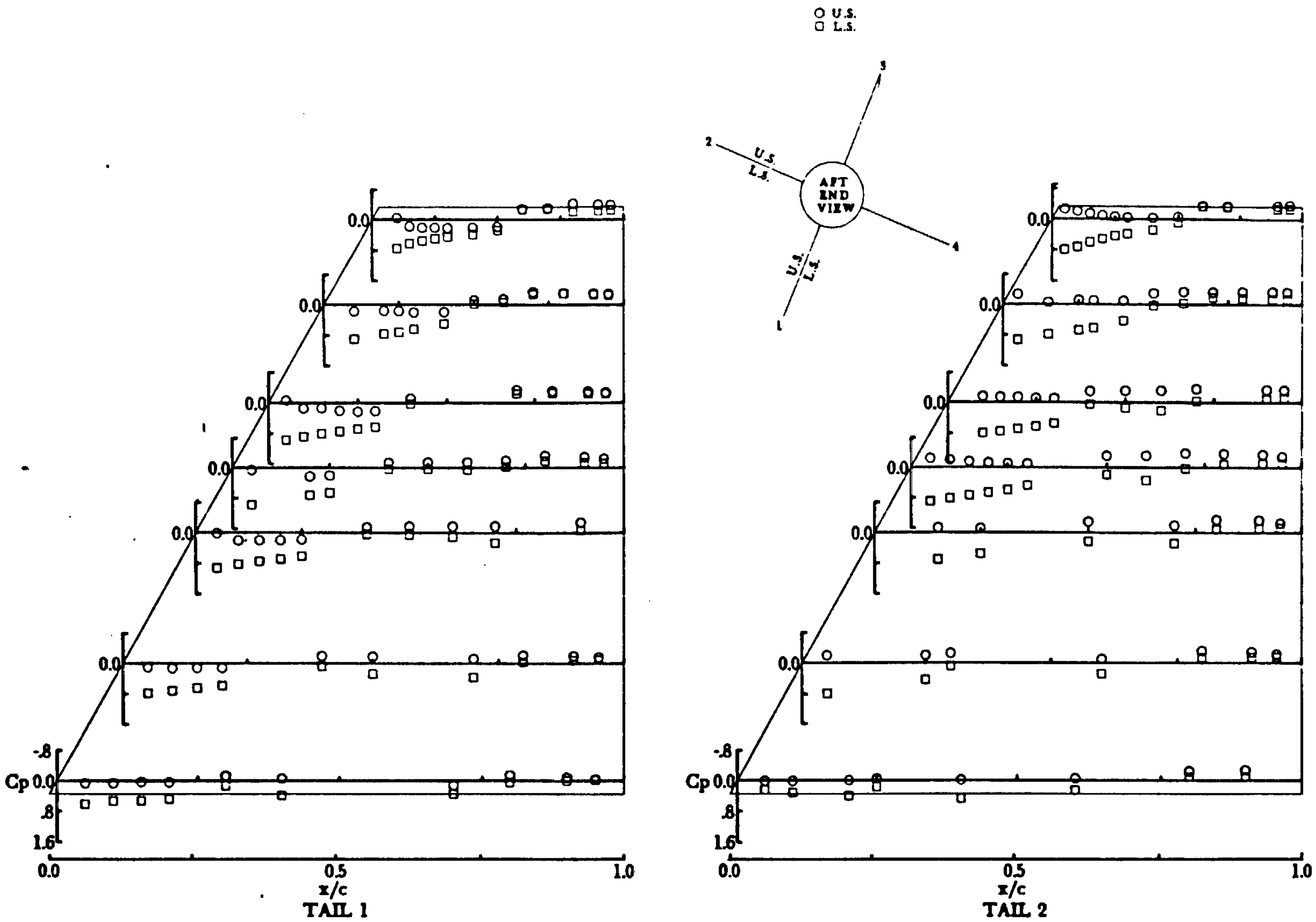

(b) α = 10.76°.

Figure 6.- Continued.

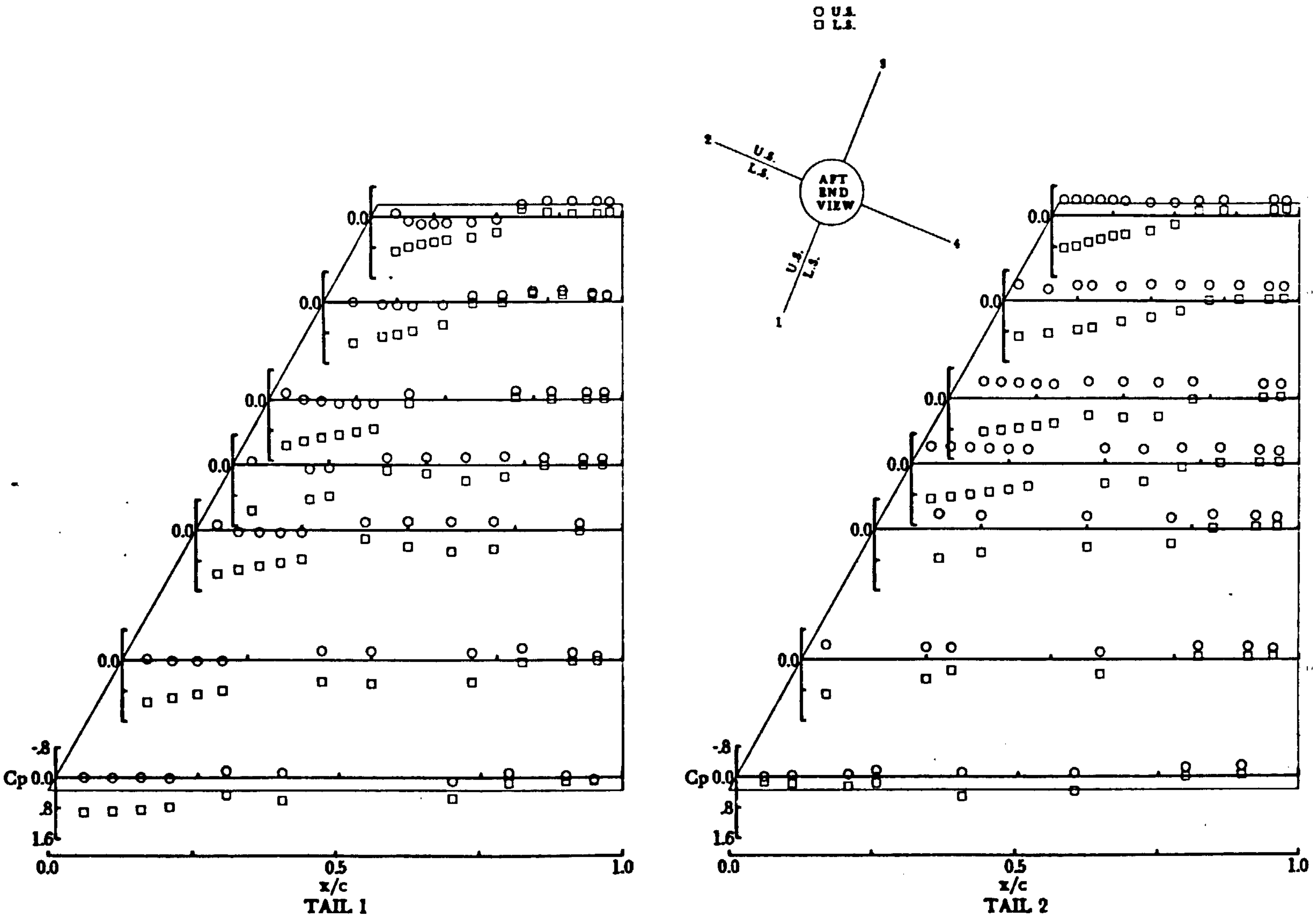

(c) α = 18.76°.

Figure 6.- Concluded.

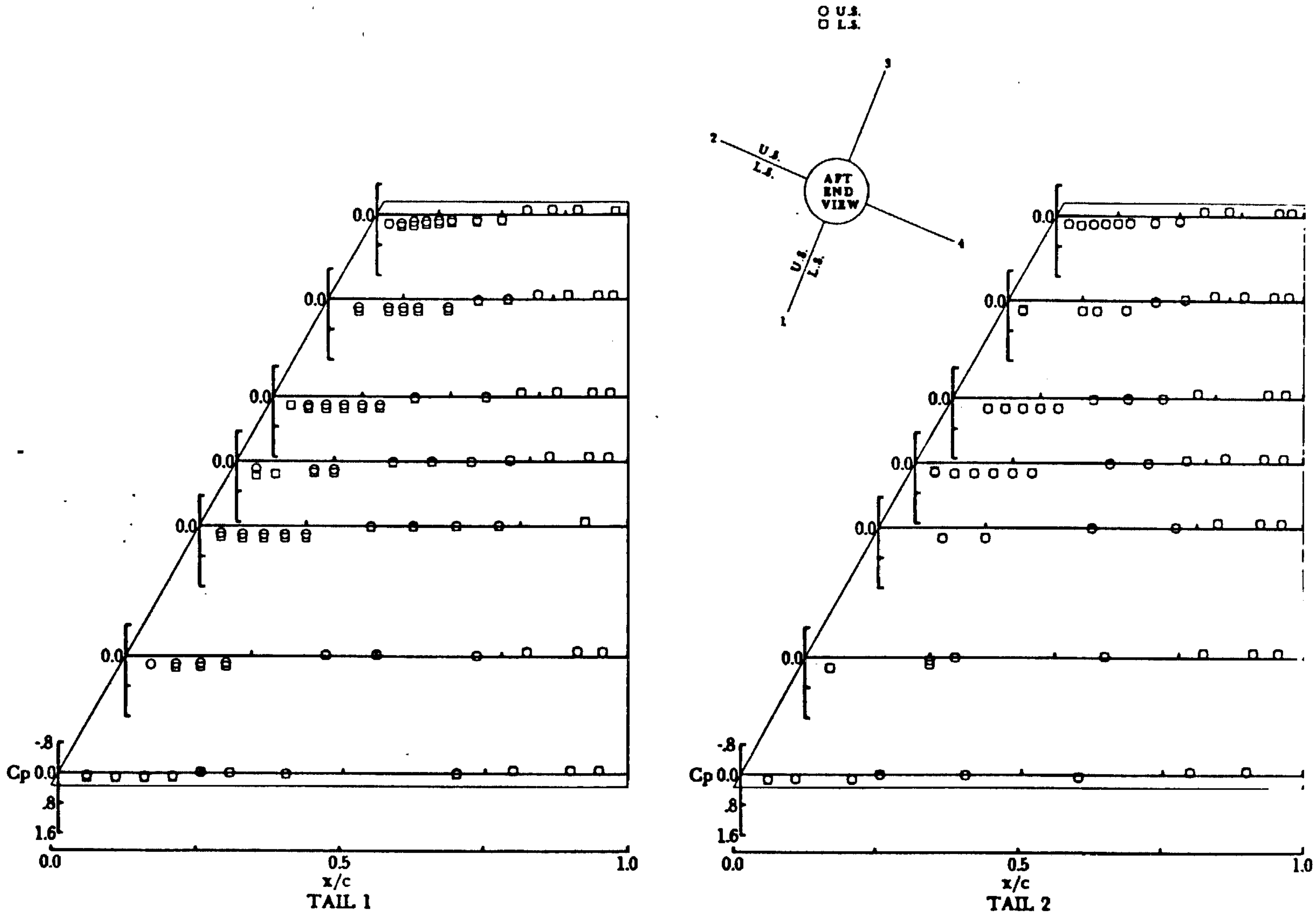

(a) α = -0.07°.

Figure 7.- Pressure coefficients for tail planform B at M = 2.36, ϕ = 22.5°, and δ = 0°.

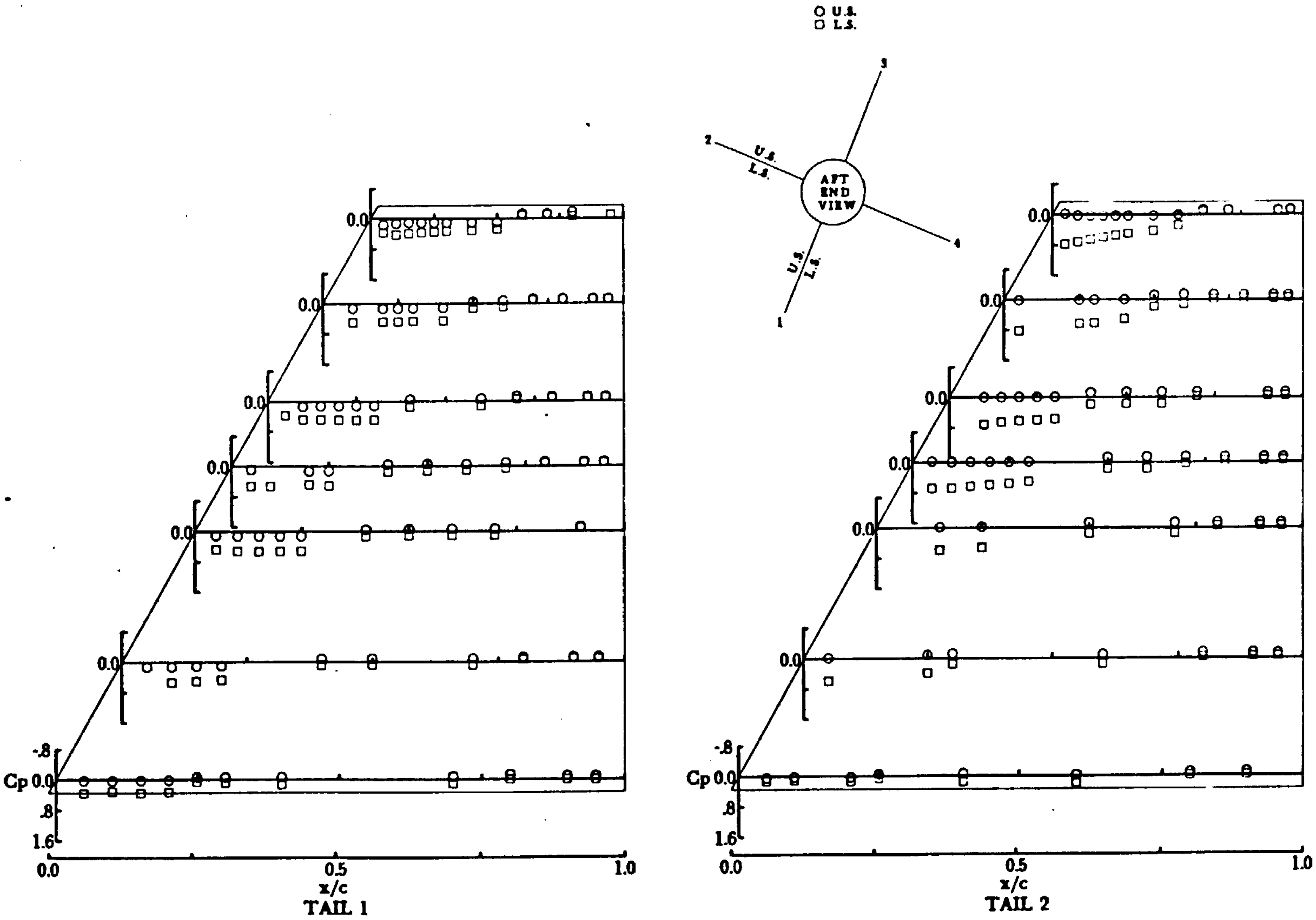

(b) α = 9.93°.

Figure 7.- Continued.

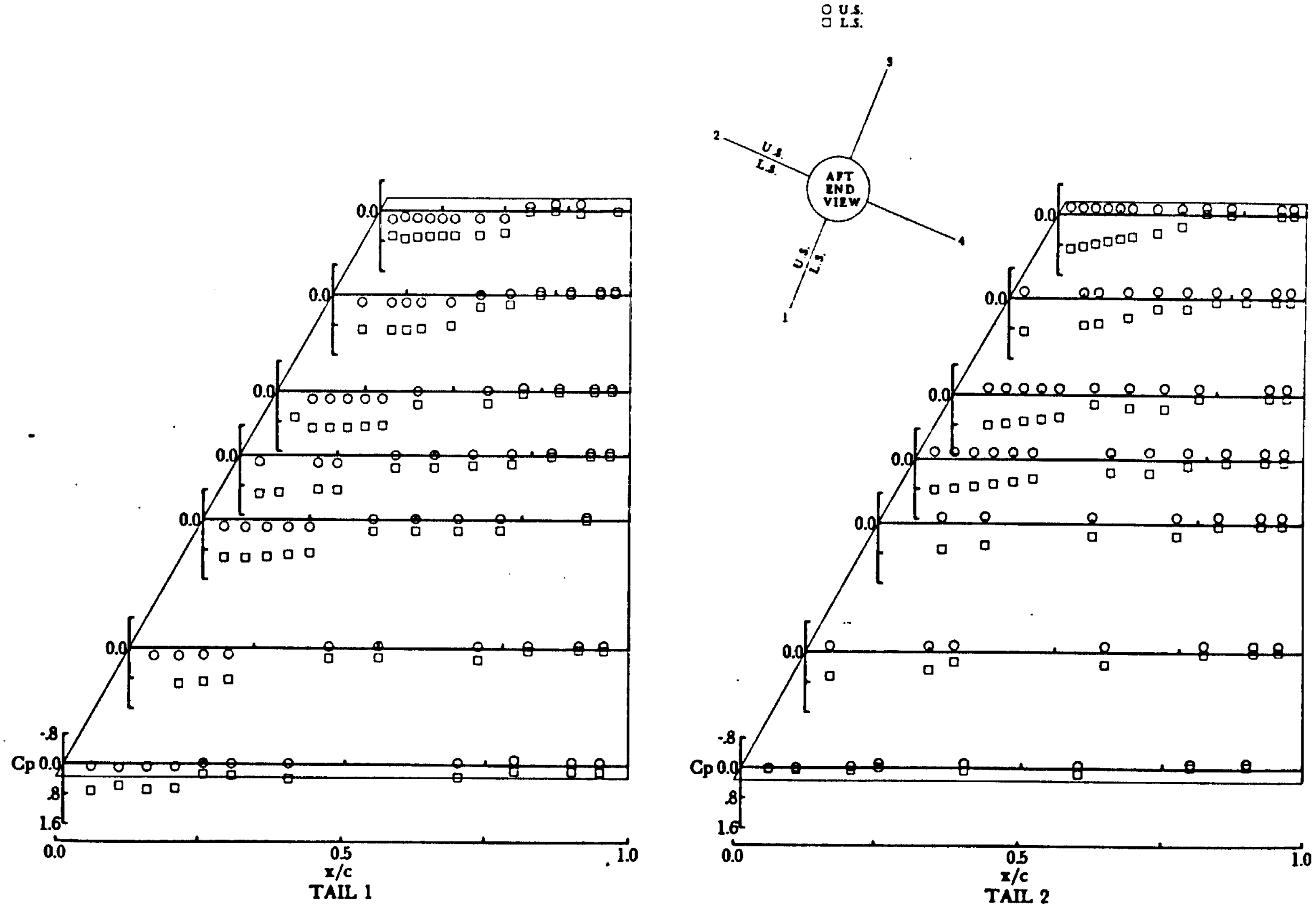

(c) α = 19.92°.

Figure 7.- Concluded.

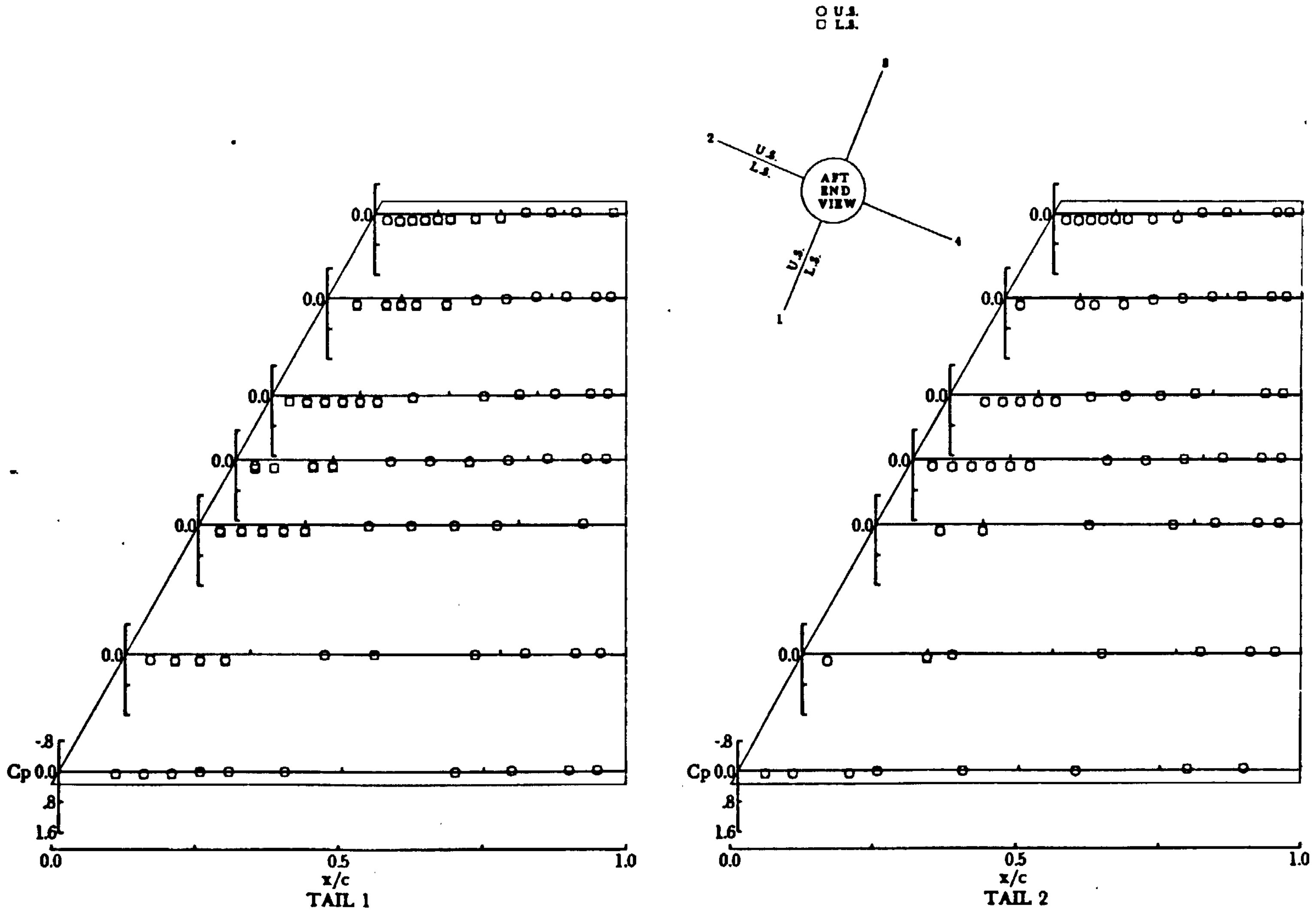

(a) α = -0.20°.

Figure 8.- Pressure coefficients for tail planform B at M = 3.70, ϕ = 22.5°, and δ = 0°.

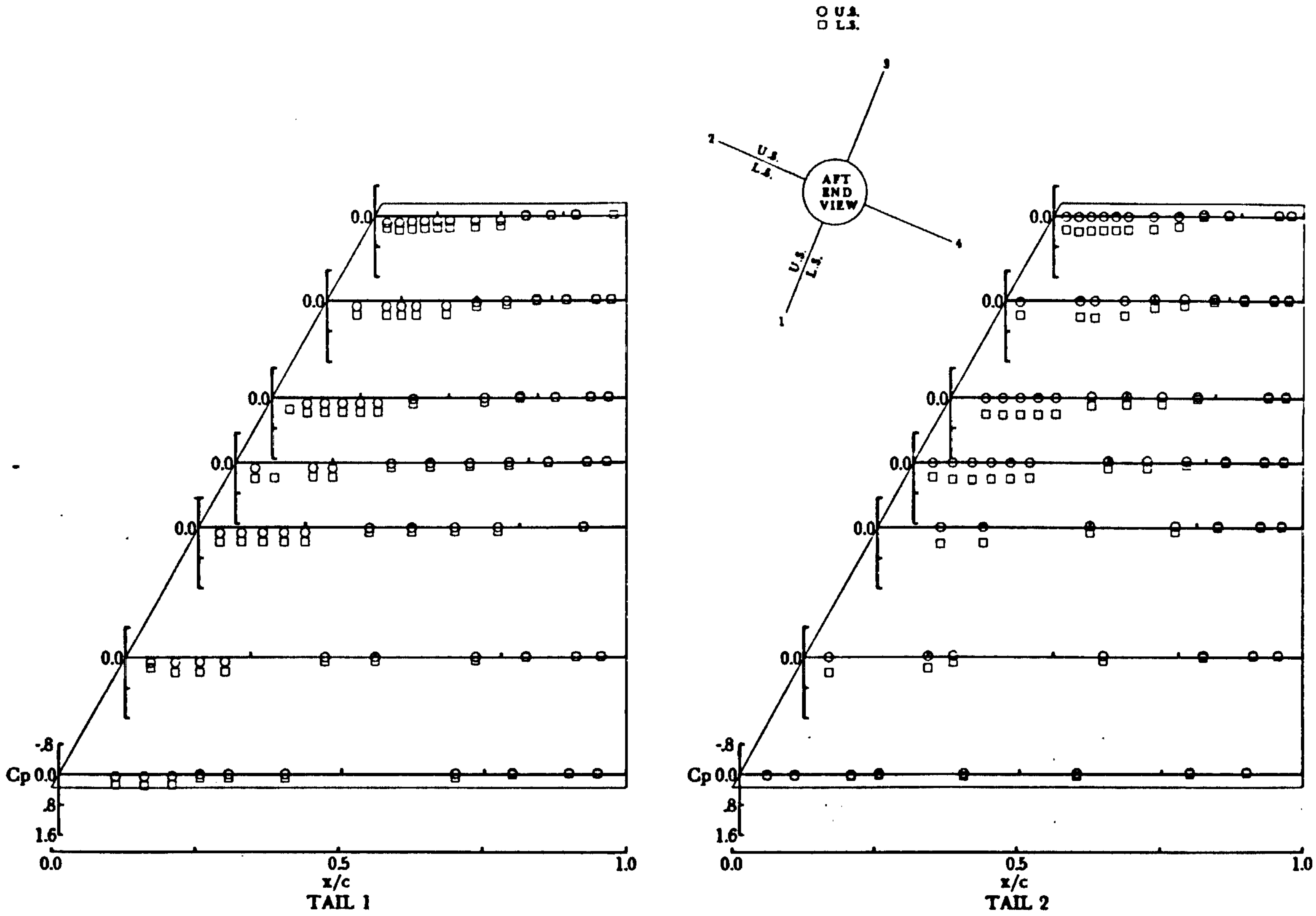

(b) α = 9.80°.

Figure 8.- Continued.

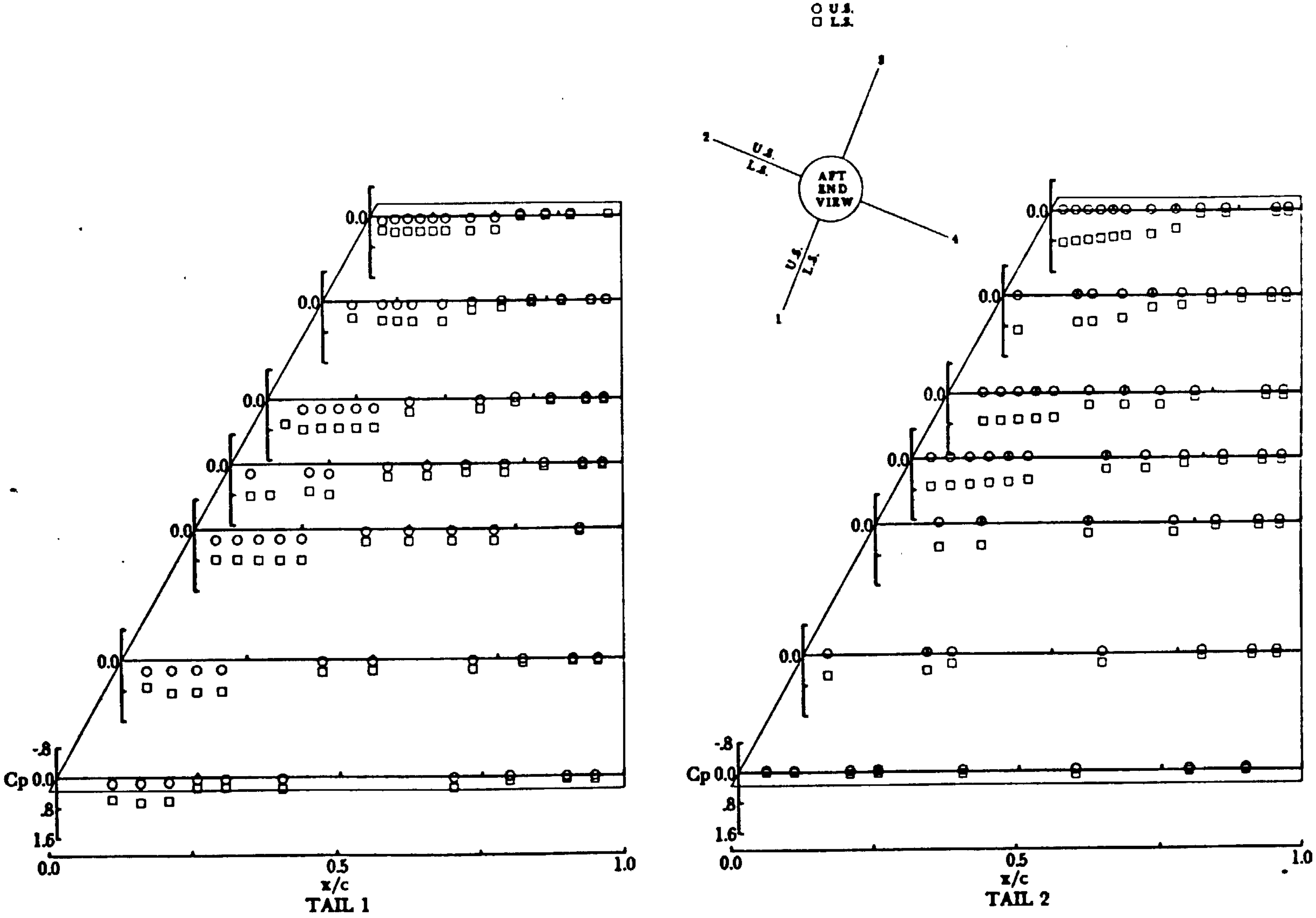

(c) α = 19.80°.

Figure 8.- Concluded.

C-4

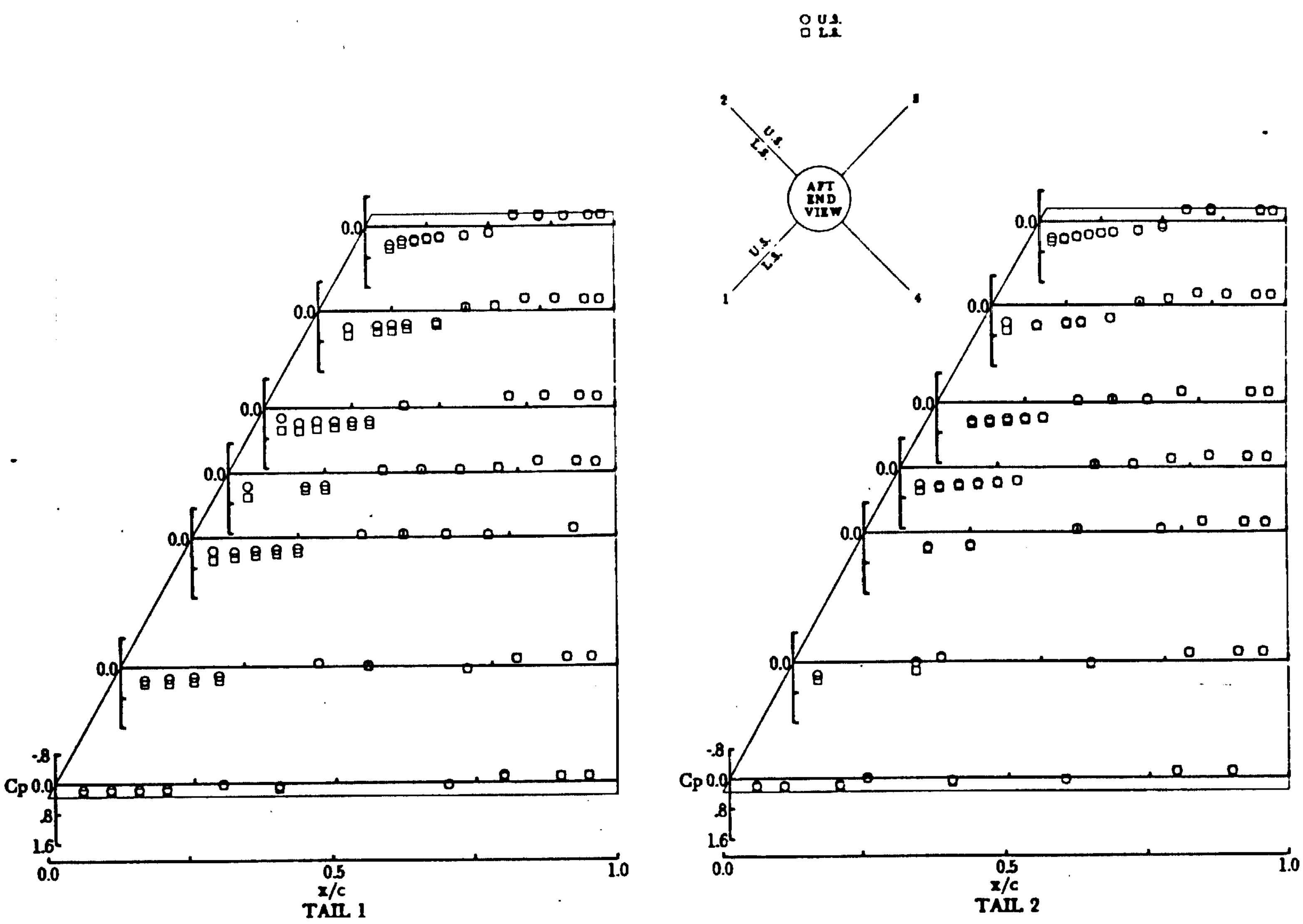

(a) α = 0.74°.

Figure 9.- Pressure coefficients for tail planform B at M = 1.60, ϕ = 45°, and δ = 0°.

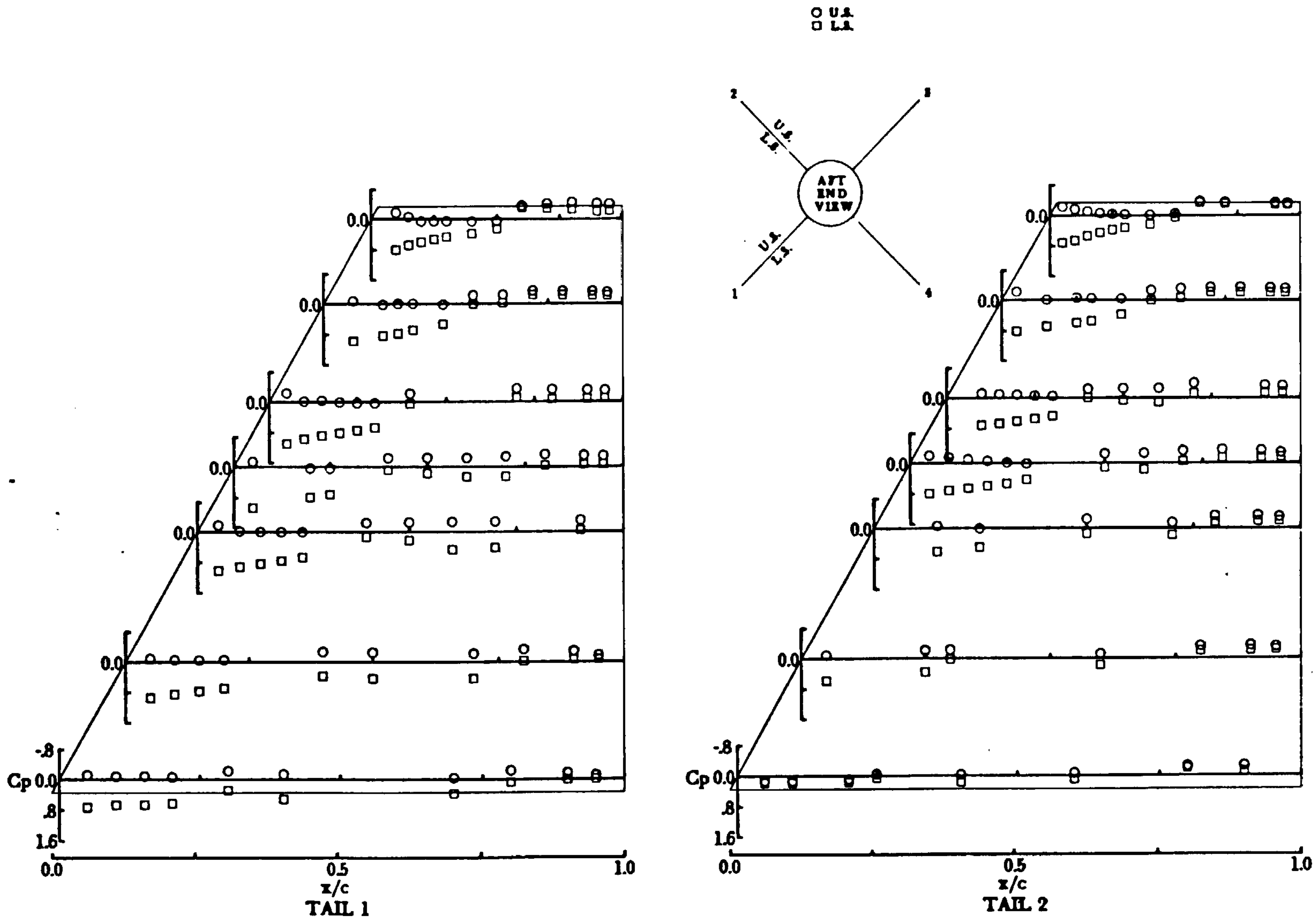

(b) α = 10.76°.

Figure 9.- Continued.

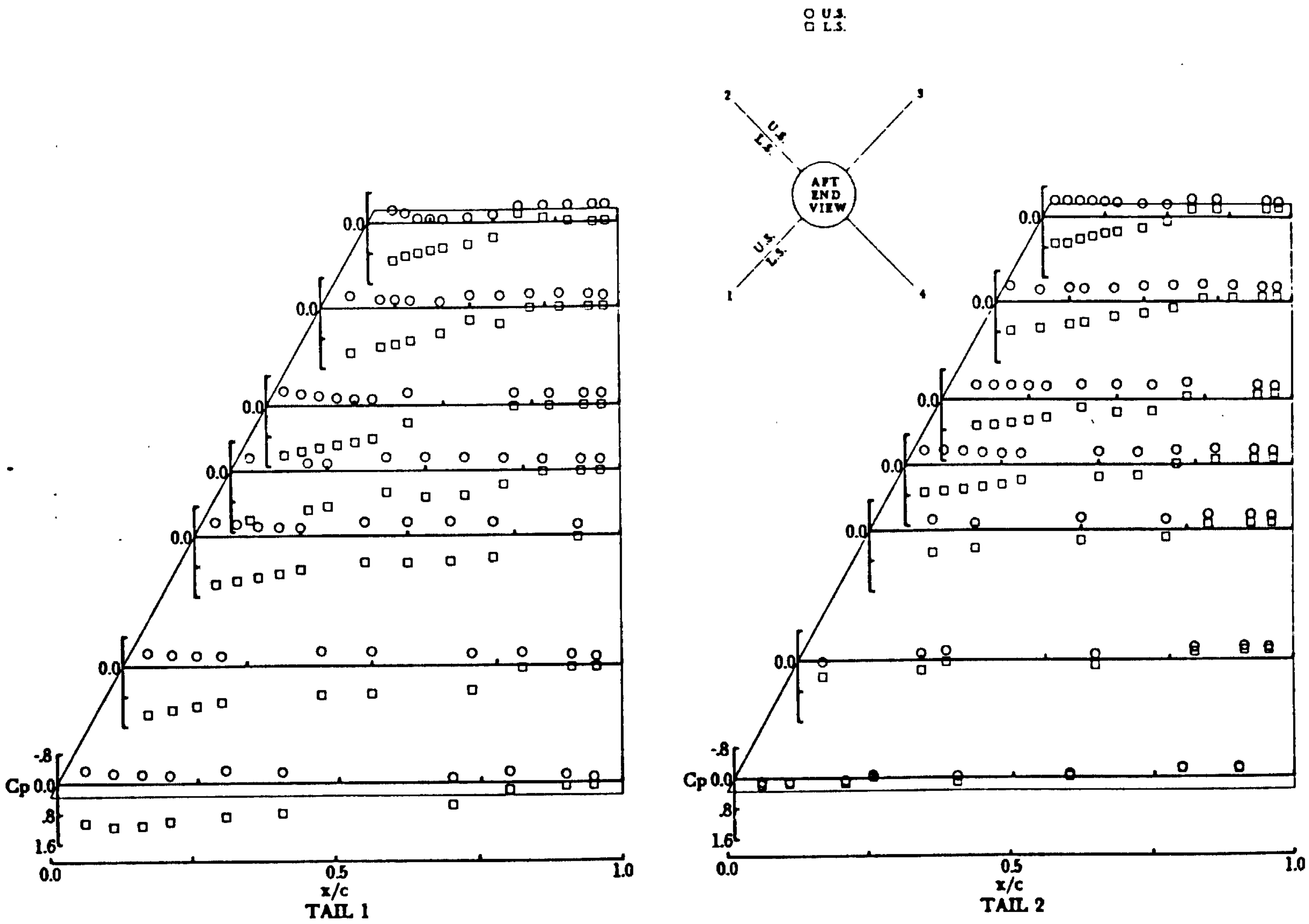

(c) α = 18.75°.

Figure 9.- Concluded.

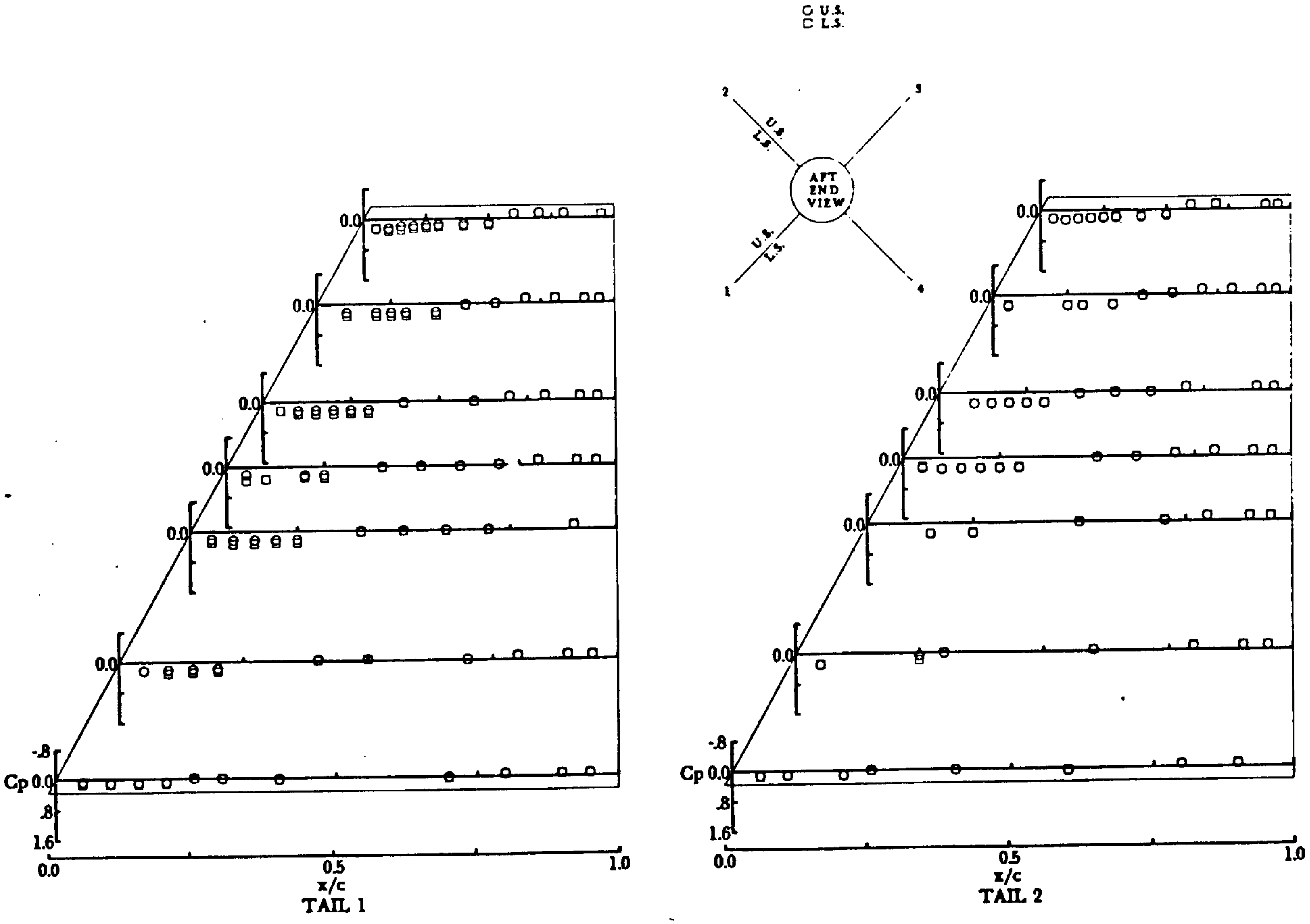

(a) α = -0.04°.

Figure 10.- Pressure coefficients for tail planform B at M = 2.36, ϕ = 45°, and δ = 0°.

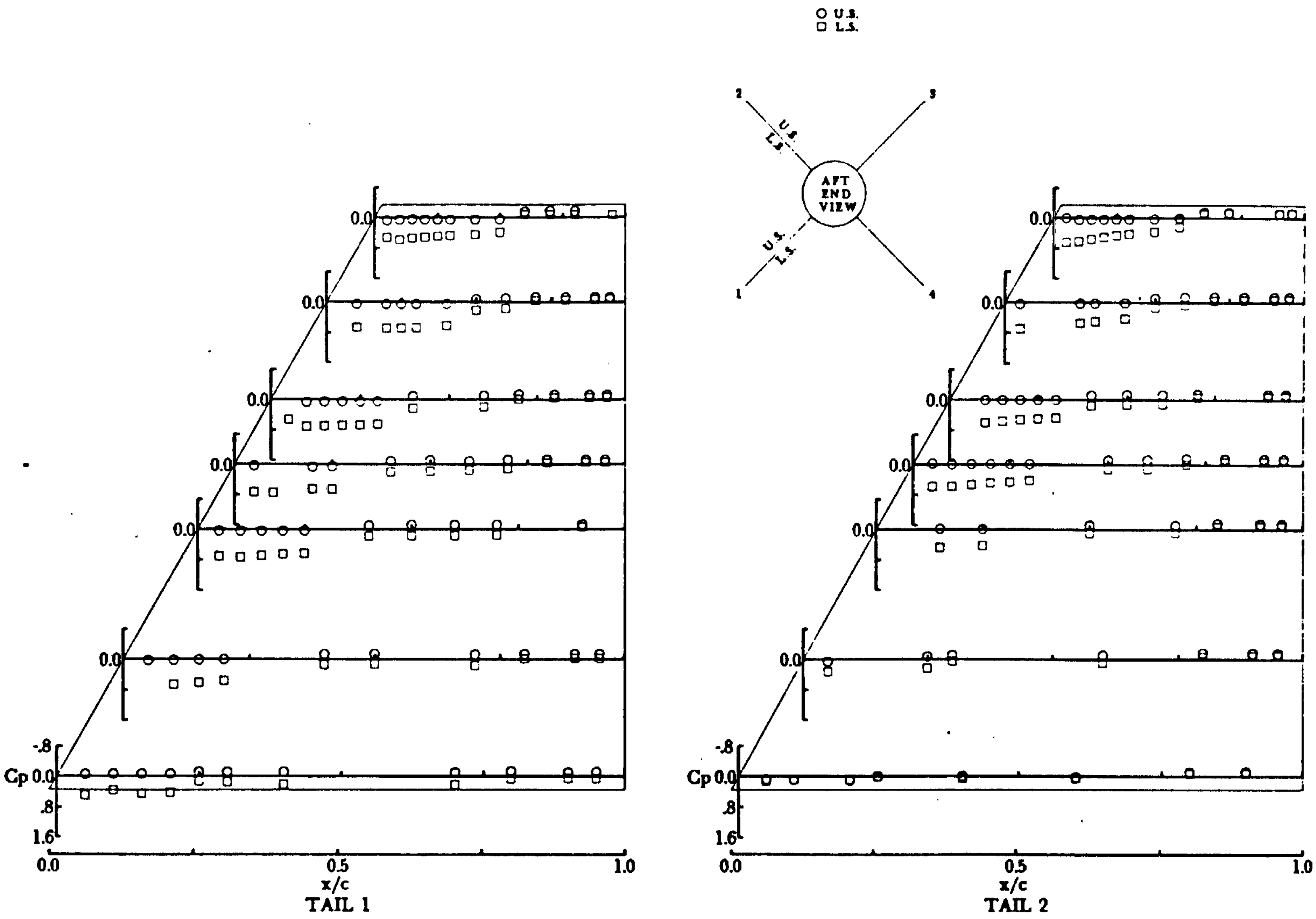

(b) α = 9.95°.

Figure 10.- Continued.

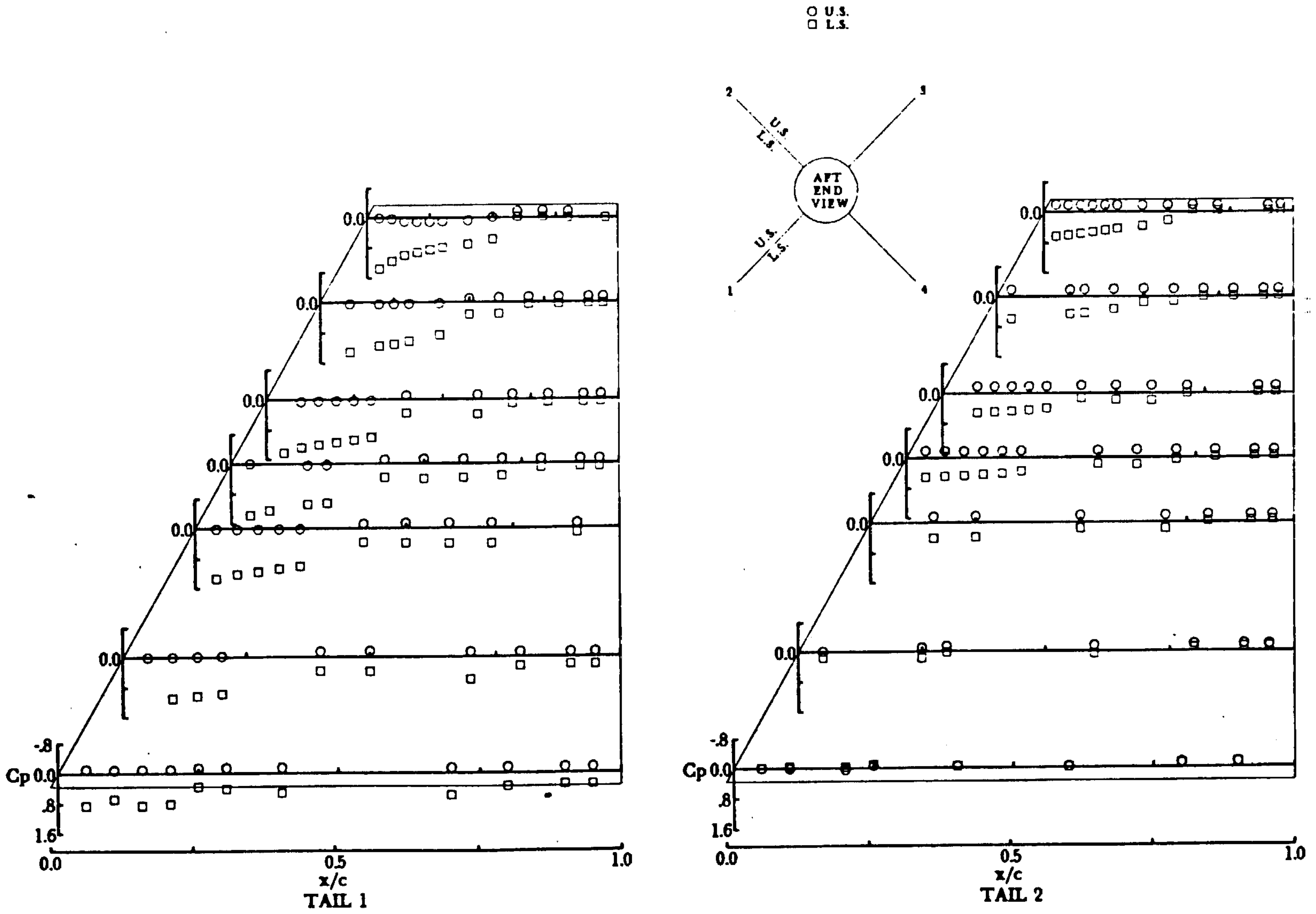

(c) α = 19.95°.

Figure 10.- Concluded.

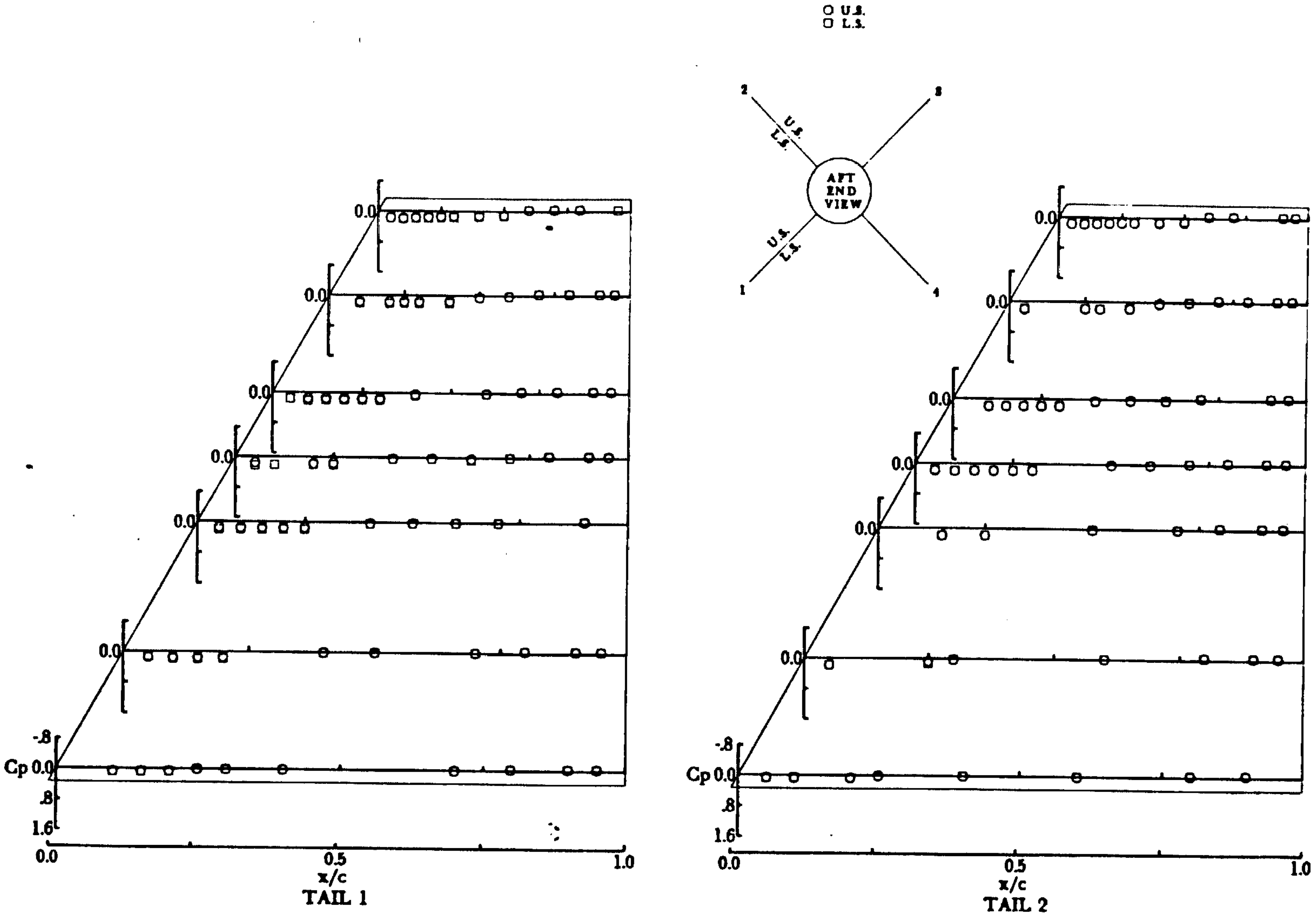

(a) α = -0.30°.

Figure 11.- Pressure coefficients for tail planform B at $M = 3.70$, $\phi = 45°$, and $\delta = 0°$.

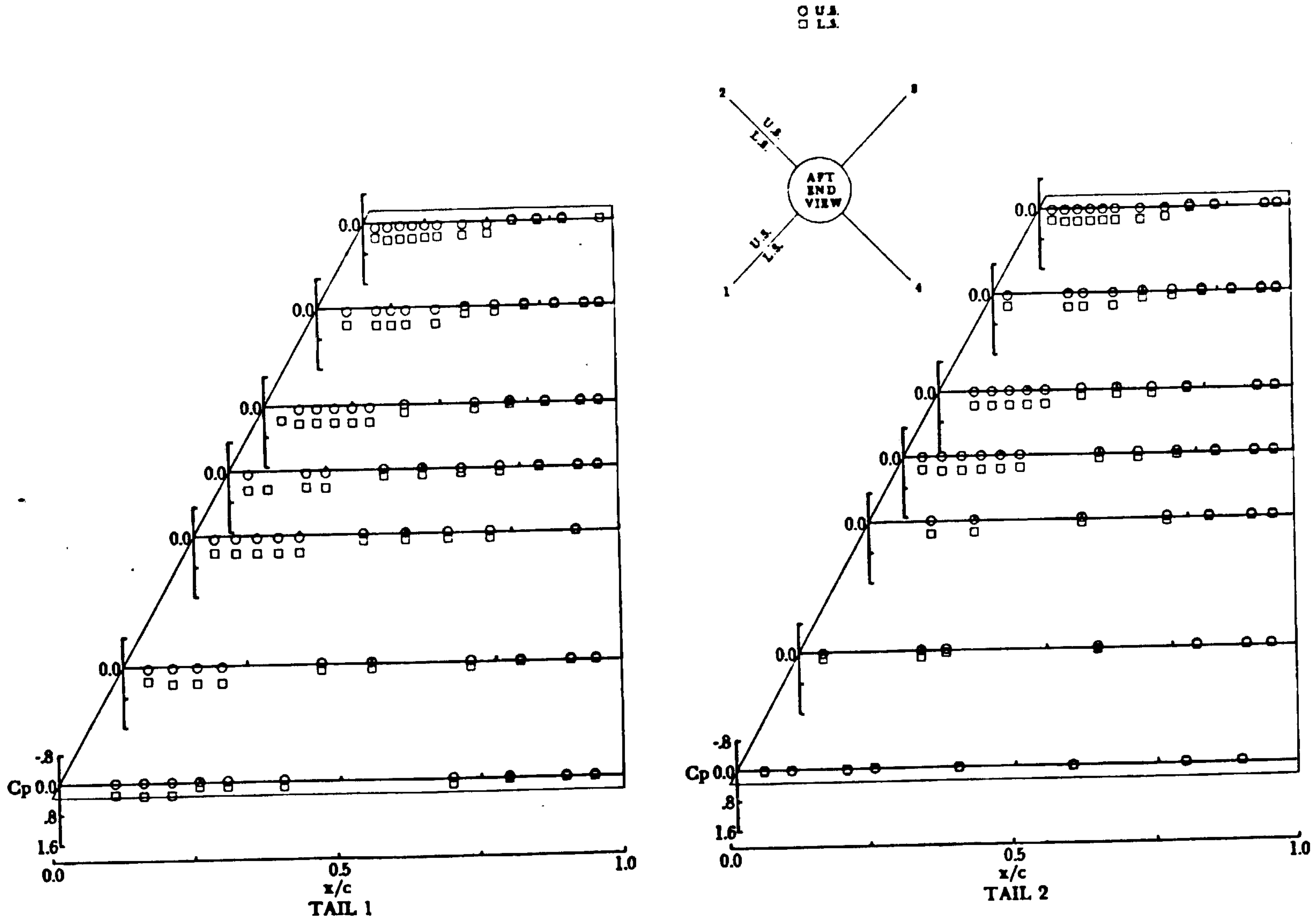

(b) α = 9.70°.

Figure 11.- Continued.

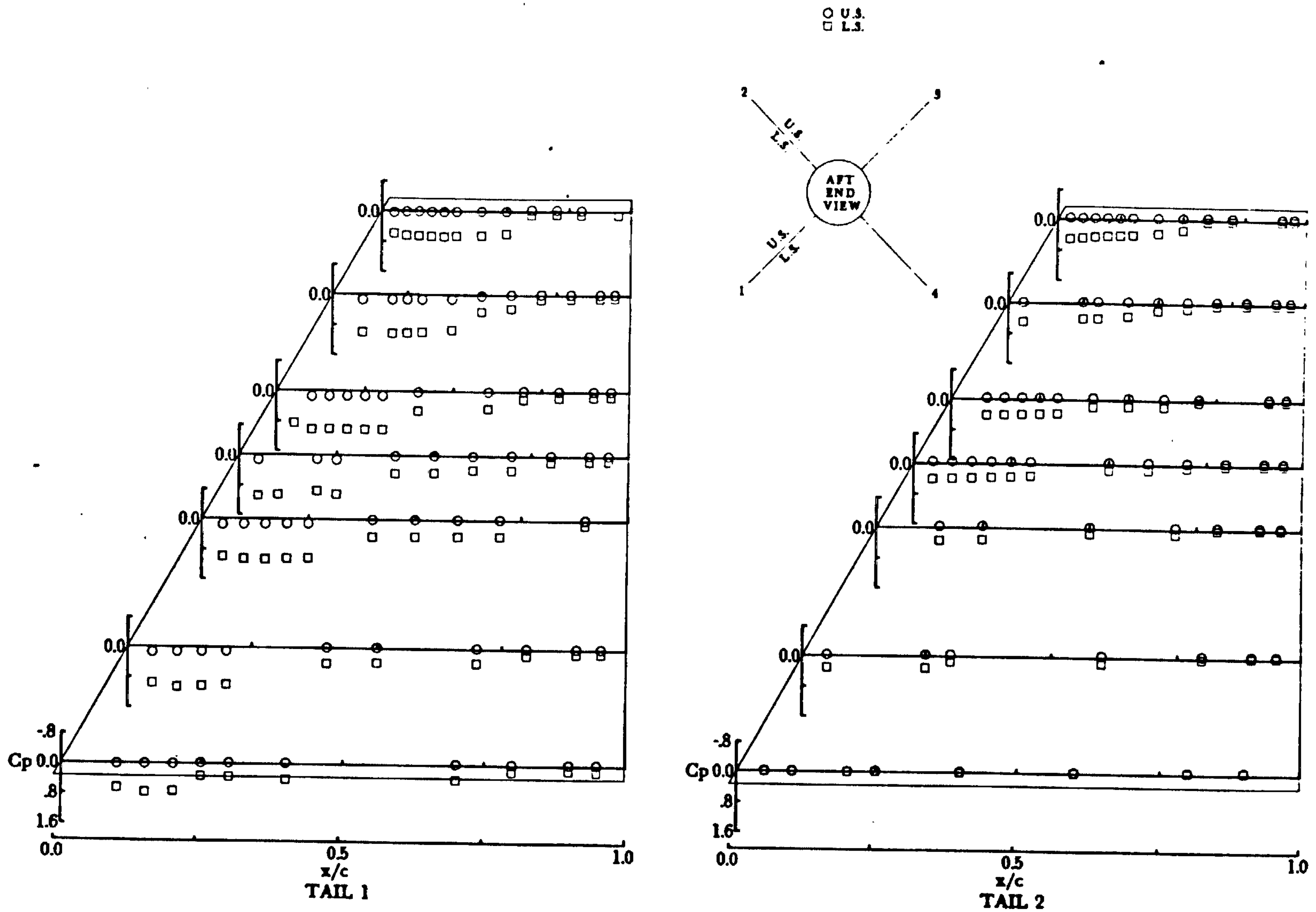

(c) α = 19.70°.

Figure 11.- Concluded.

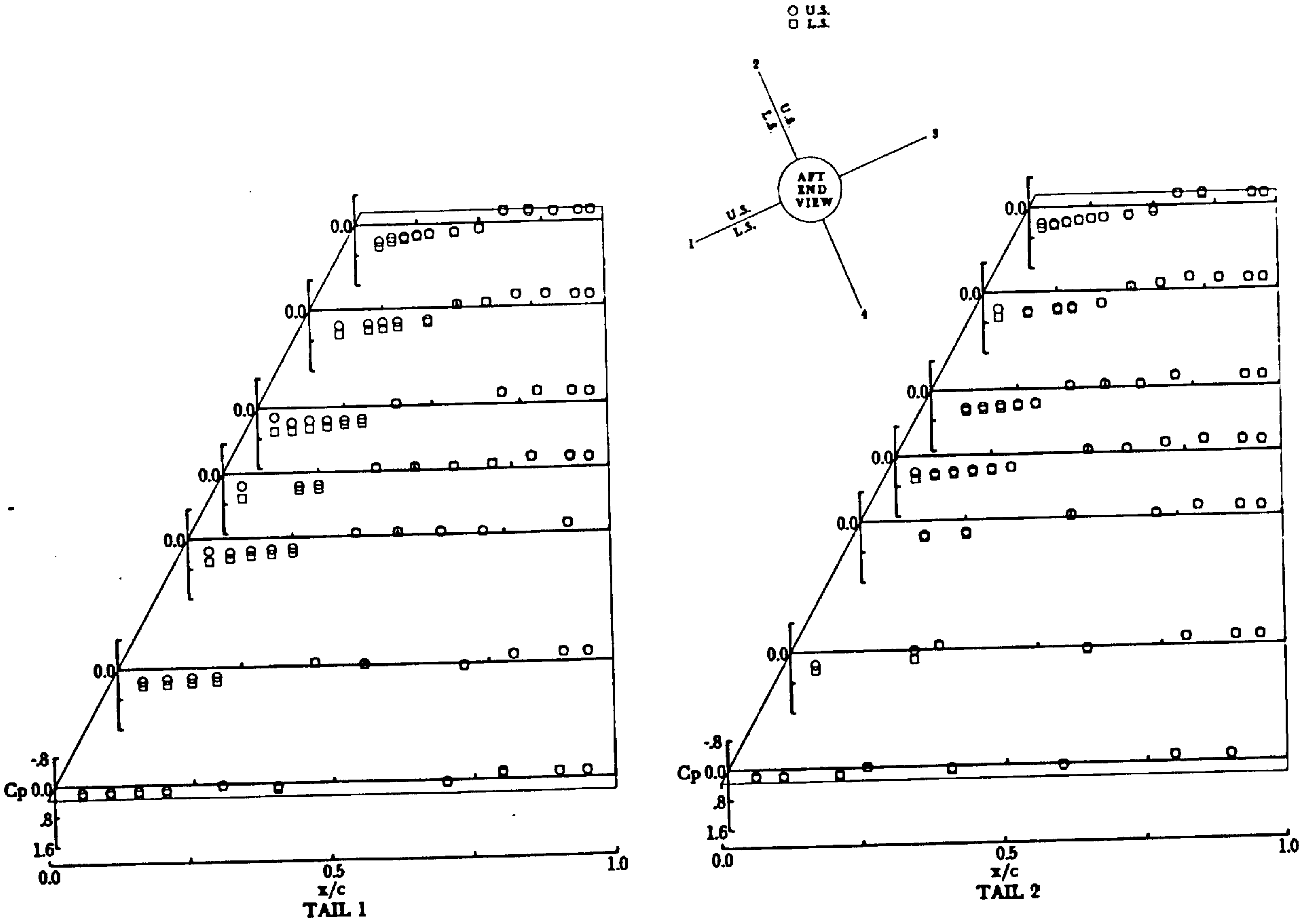

(a) α = 0.80°.

Figure 12.- Pressure coefficients for tail planform B at M = 1.60, ϕ = 67.5°, and δ = 0°.

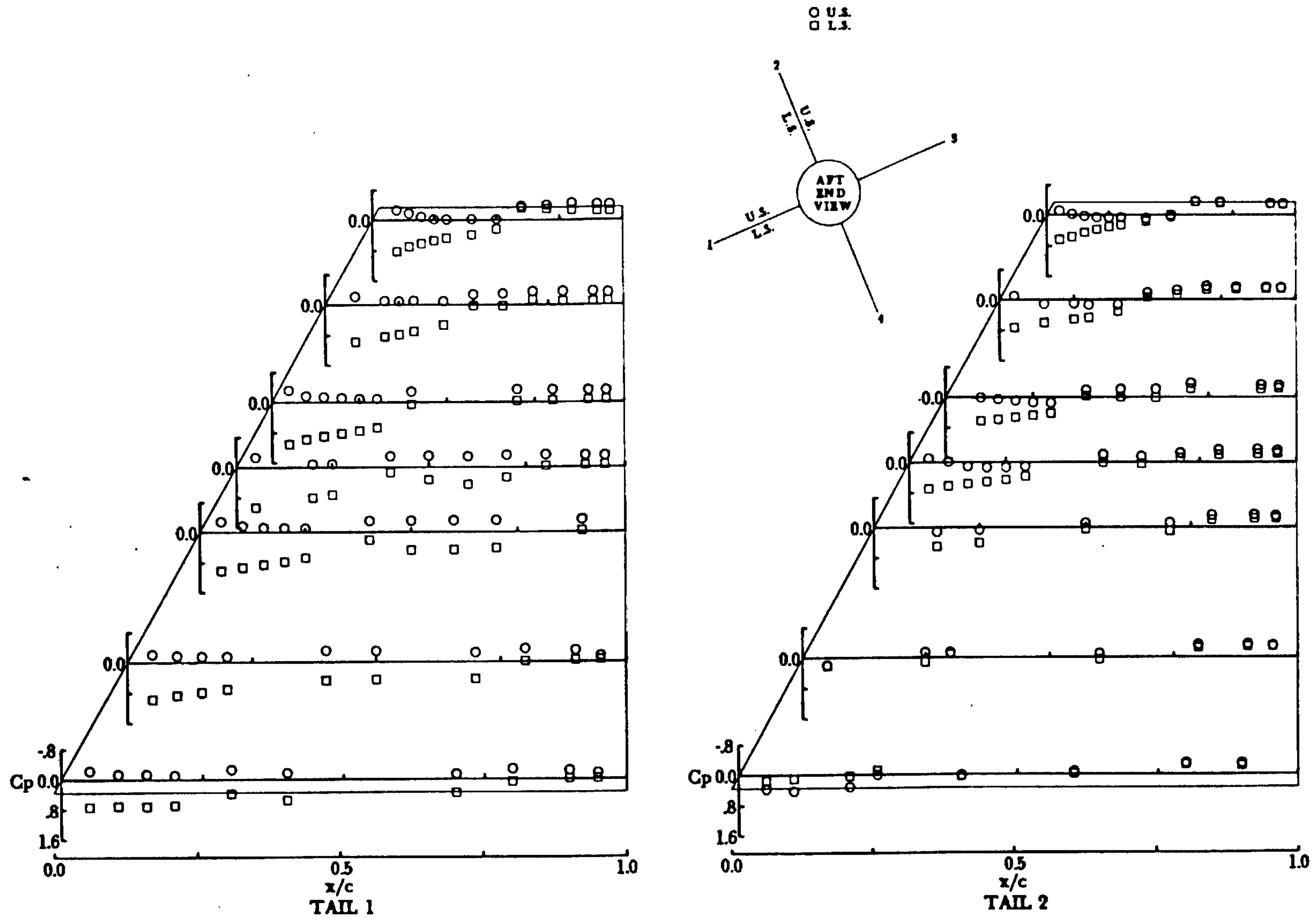

(b) α = 10.75°.

Figure 12.- Continued.

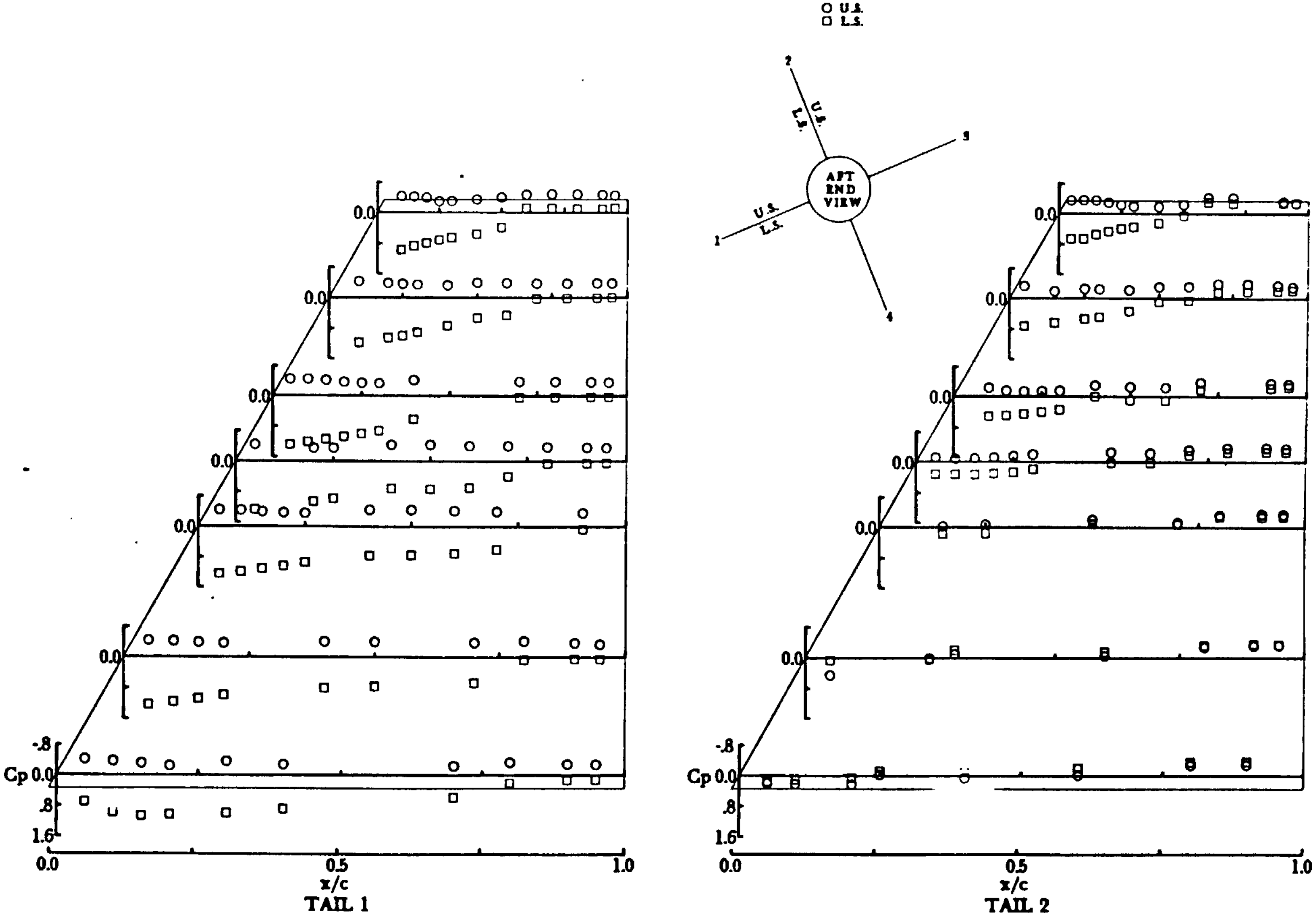

(c) α = 18.76°.

Figure 12.- Concluded.

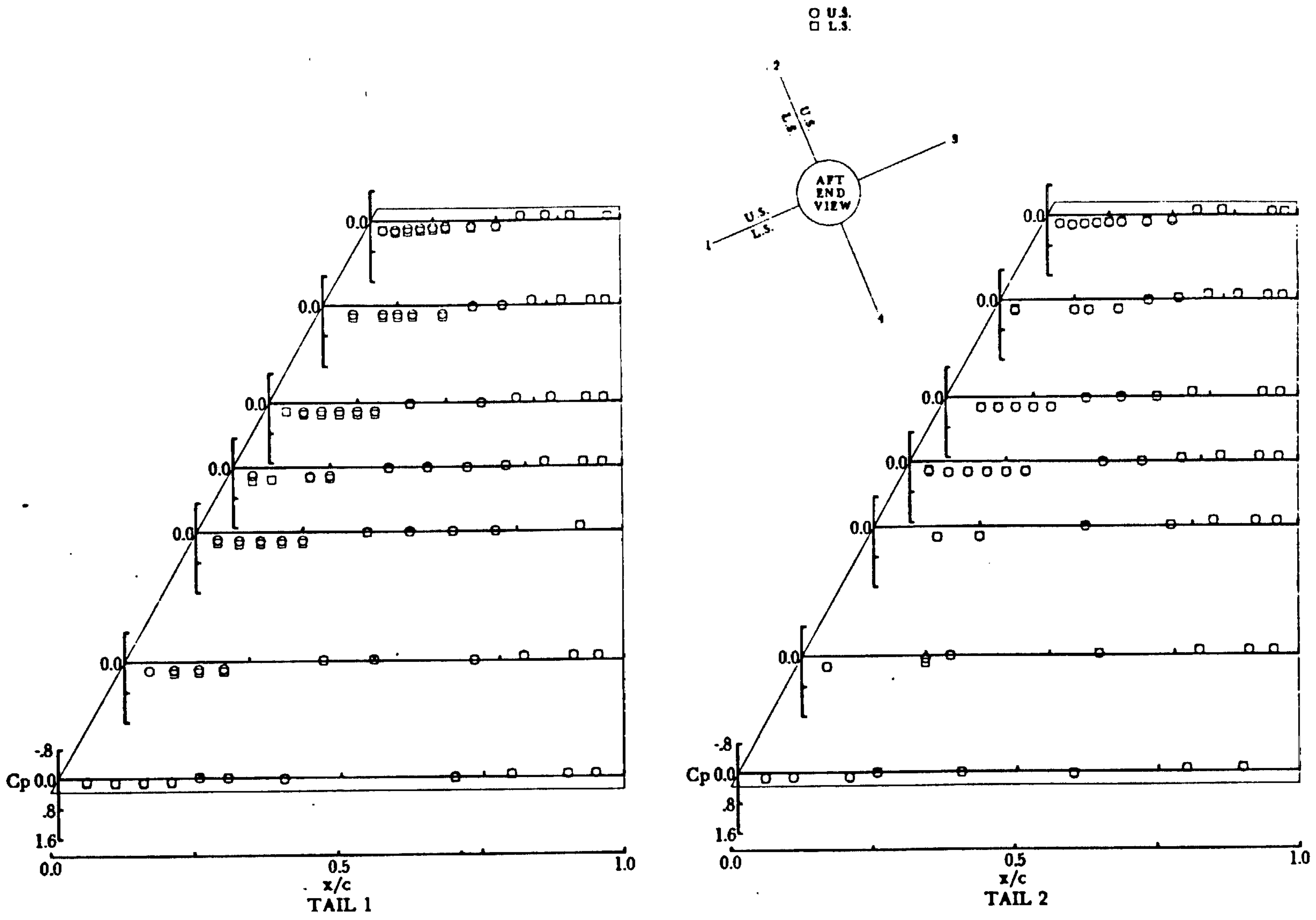

(a) α = -0.10°.

Figure 13.- Pressure coefficients for tail planform B at M = 2.36, ϕ = 67.5°, and δ = 0°.

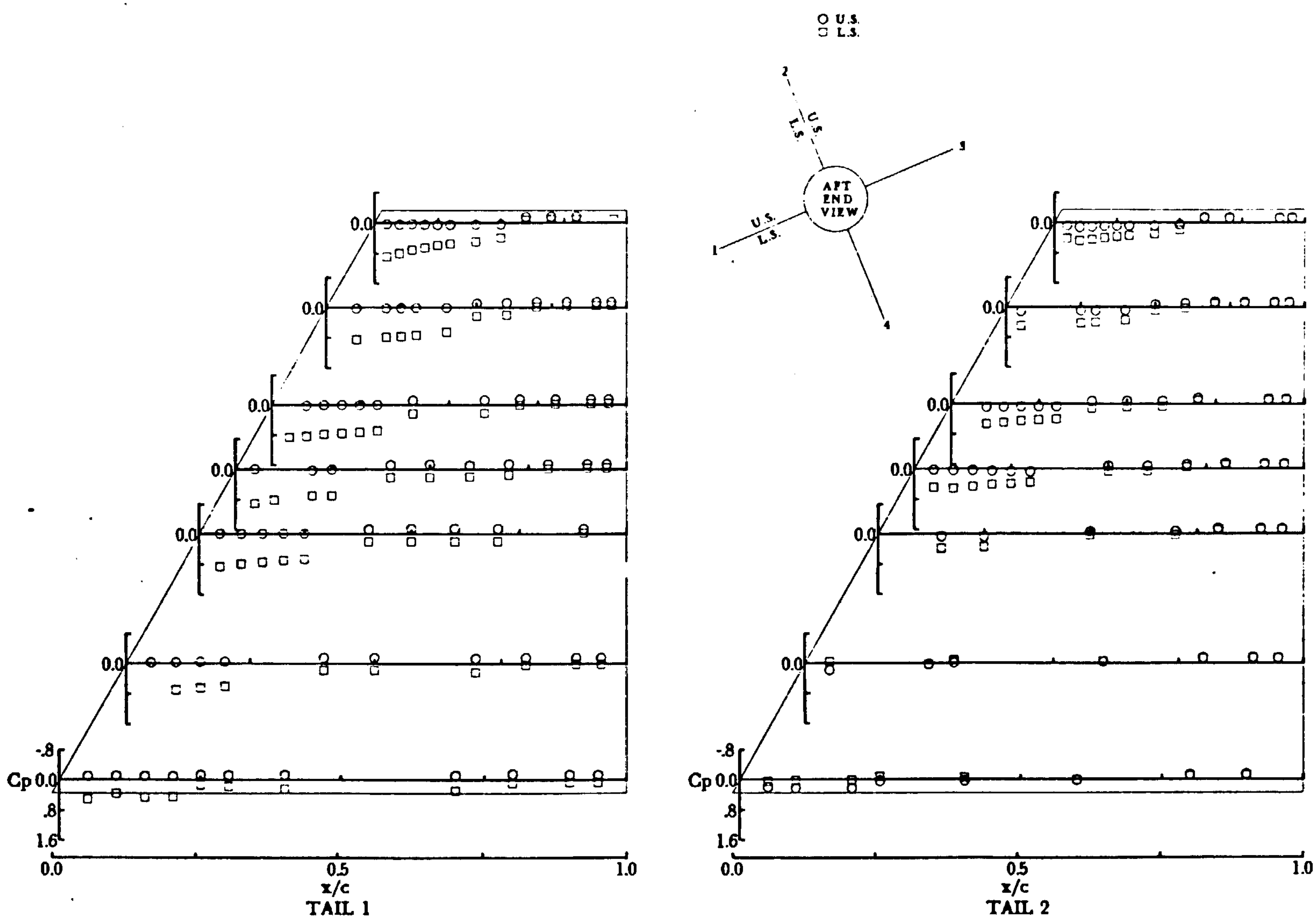

(b) α = 9.90°.

Figure 13.- Continued.

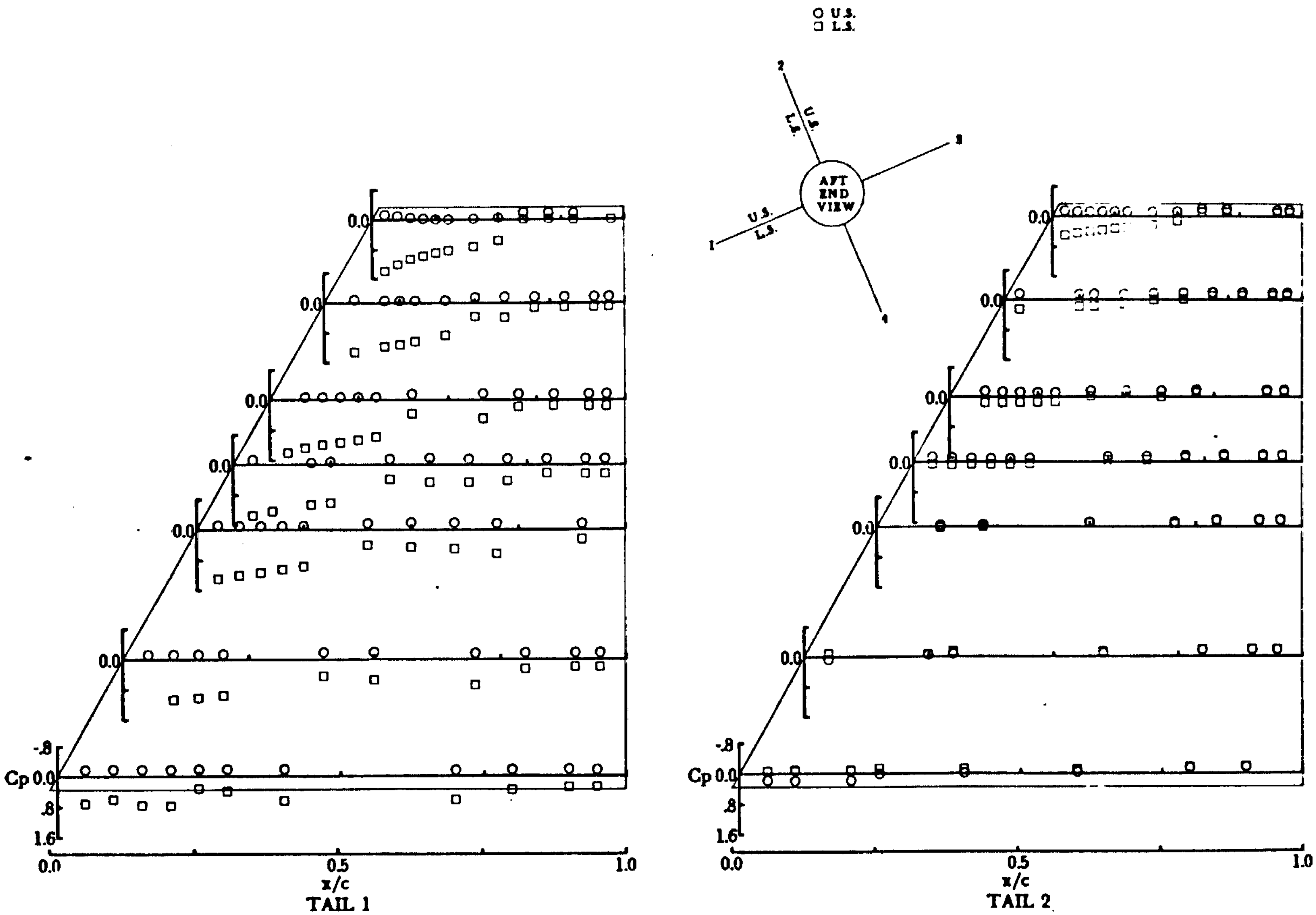

(c) α = 19.90°.

Figure 13.- Concluded.

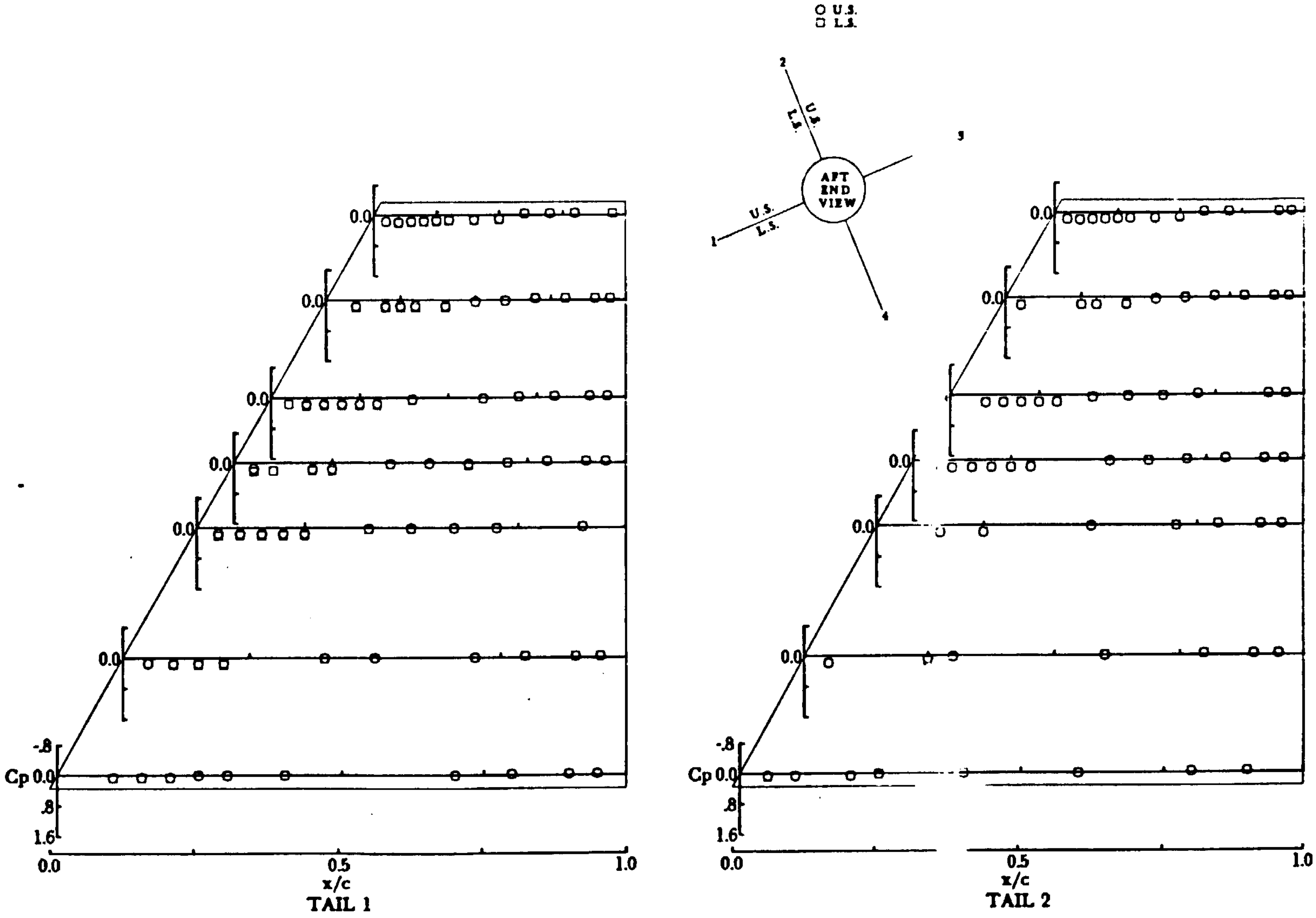

(a) $\alpha = -0.25^\circ$.

Figure 14.- Pressure coefficients for tail planform B at $M = 3.70$, $= 67.5^\circ$, and $\delta = 0^\circ$.

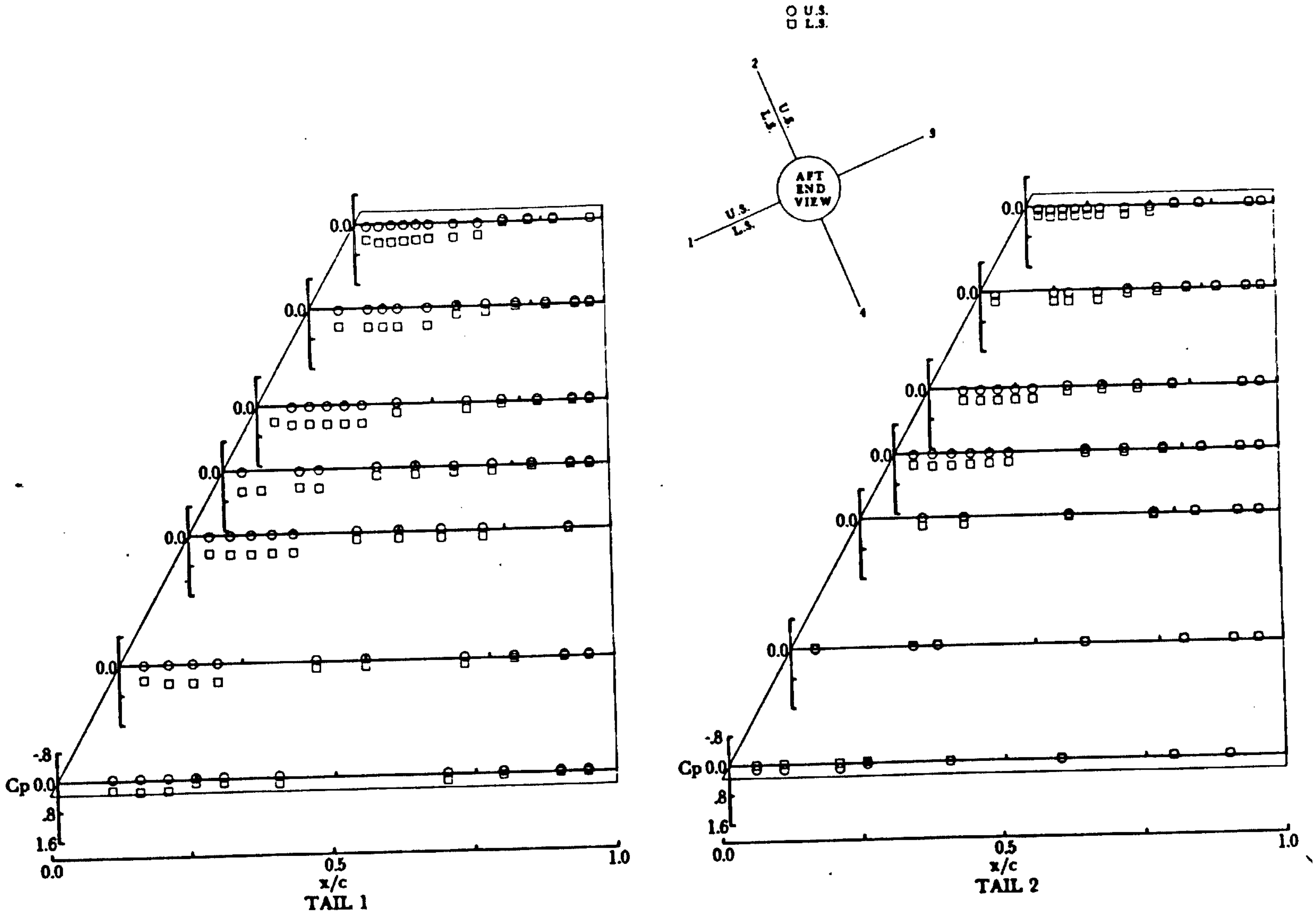

(b) α = 9.75°.

Figure 14.- Continued.

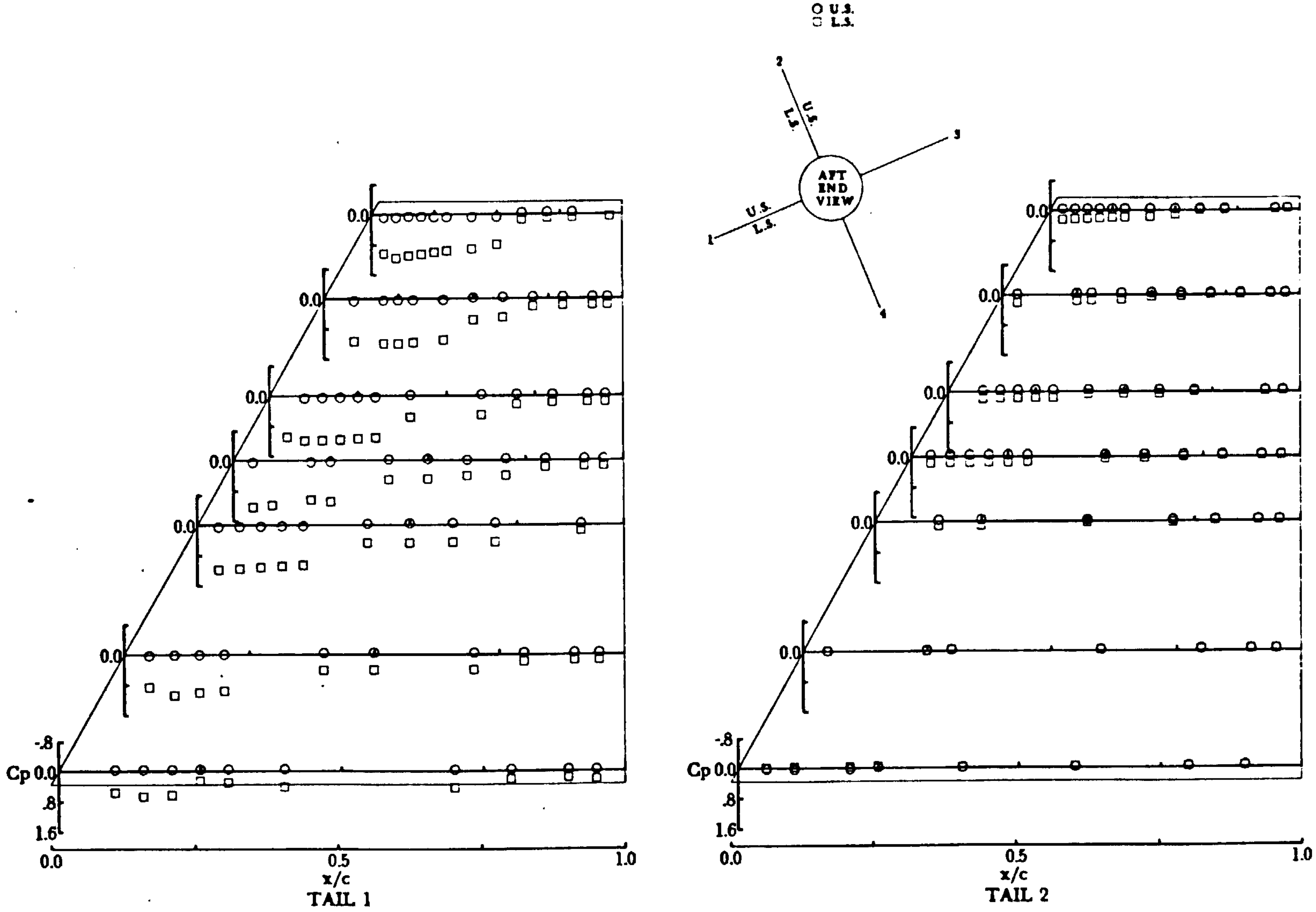

(c) α = 19.75°.

Figure 14.- Concluded.

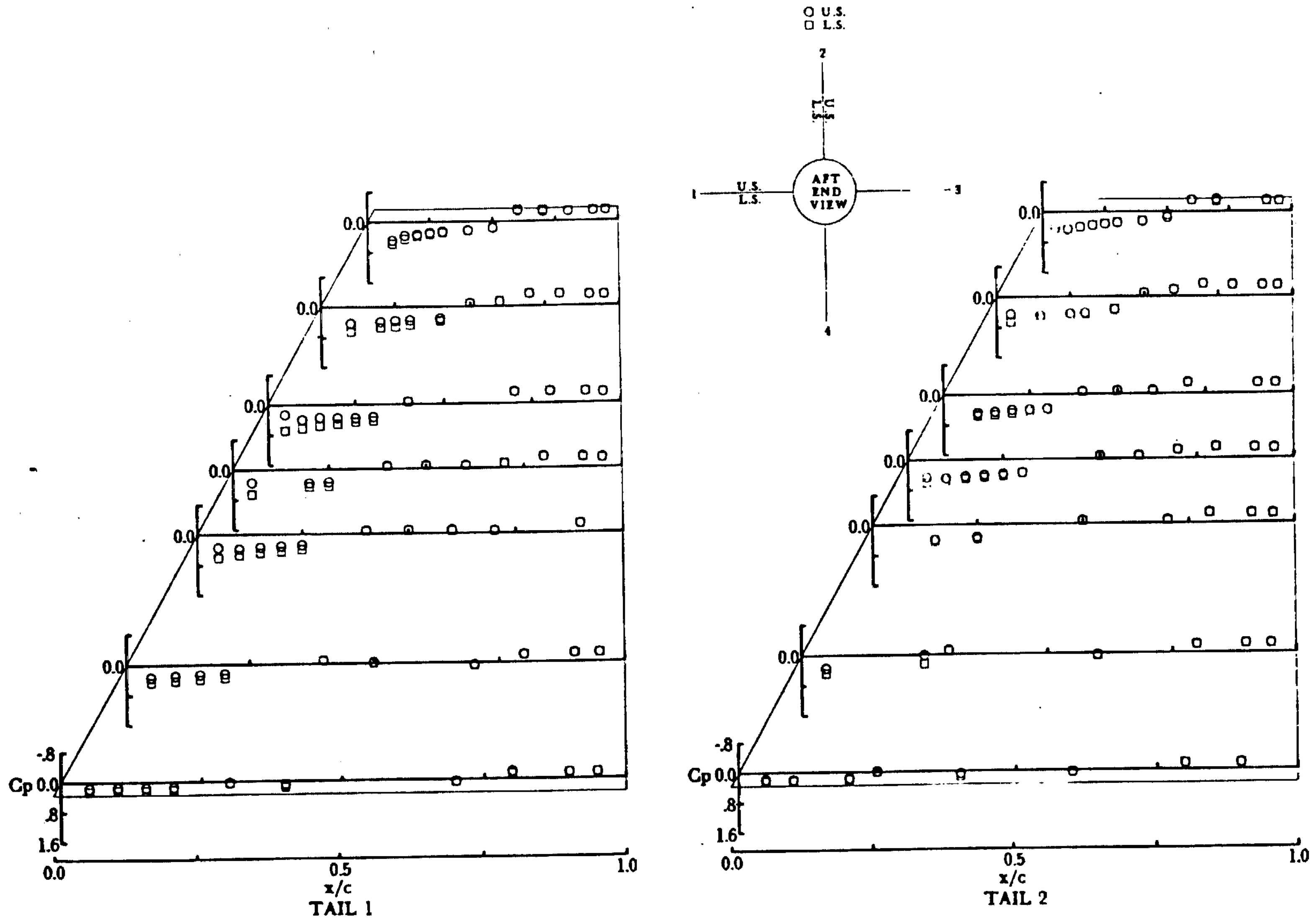

(a) α = 0.72°.

Figure 15.- Pressure coefficients for tail planform B at M = 1.60, φ = 90°, and δ = 0°.

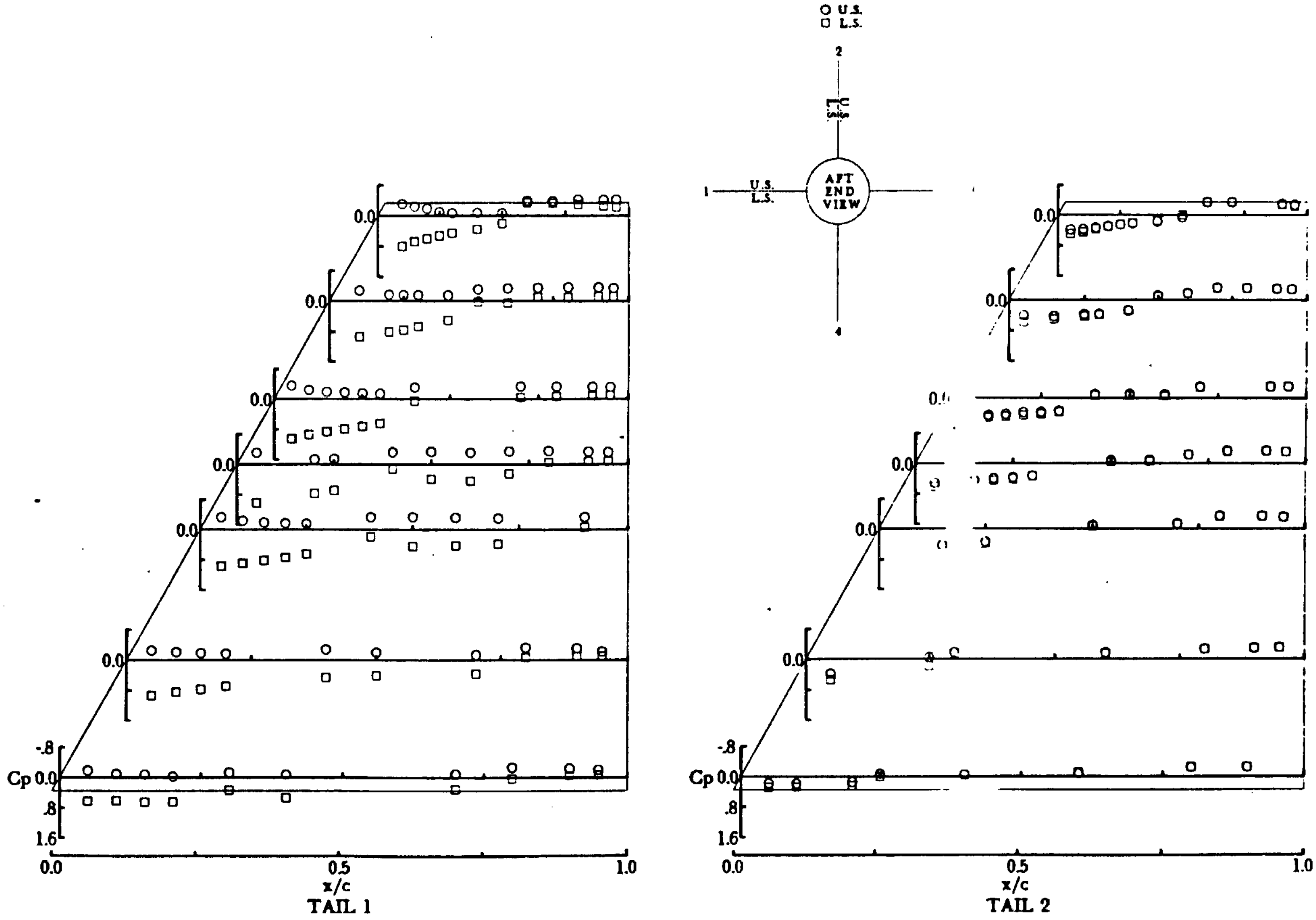

(b) α = 10.71°.

Figure 15.- Continued.

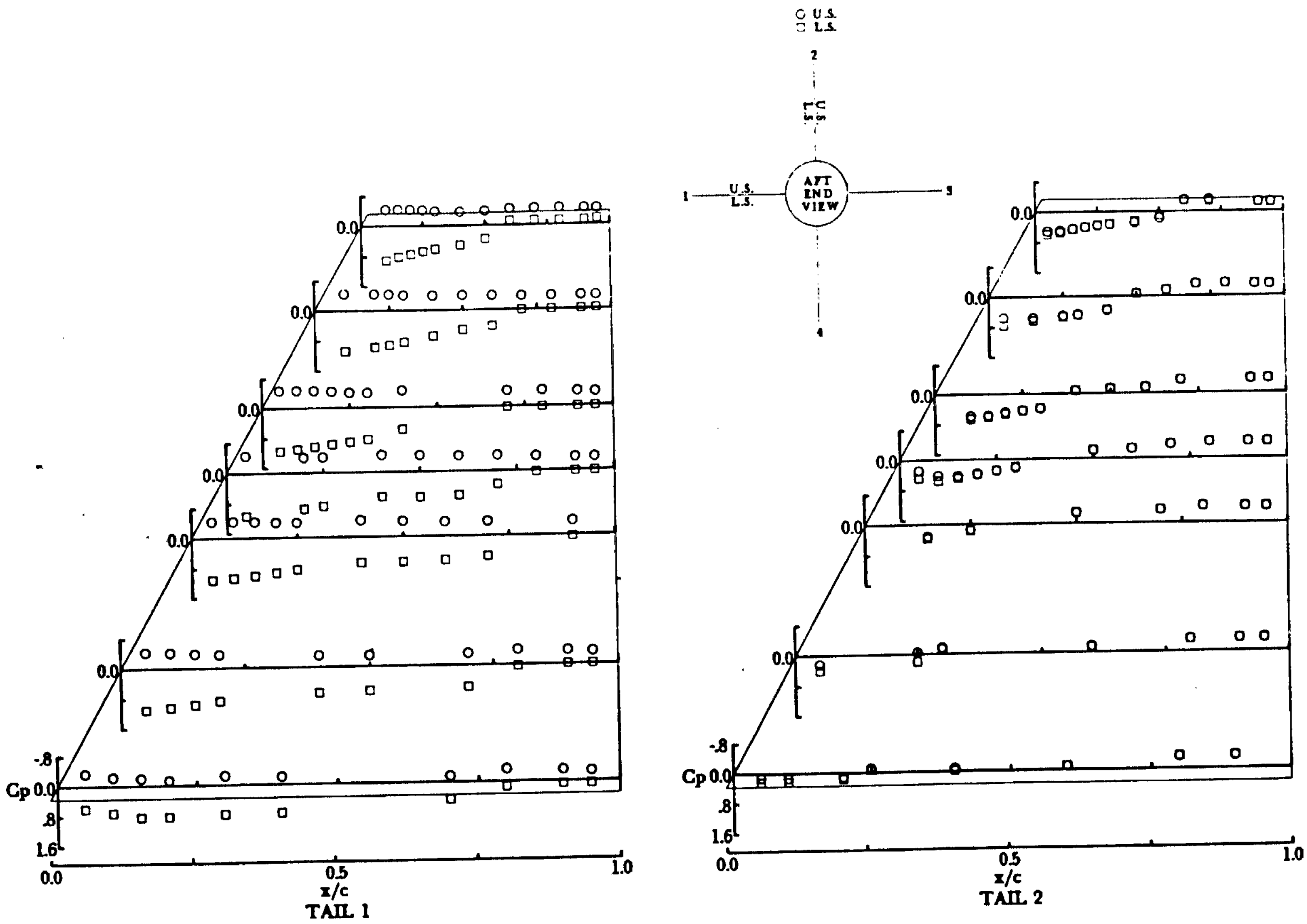

(c) α = 18.00°.

Figure 15.- Concluded.

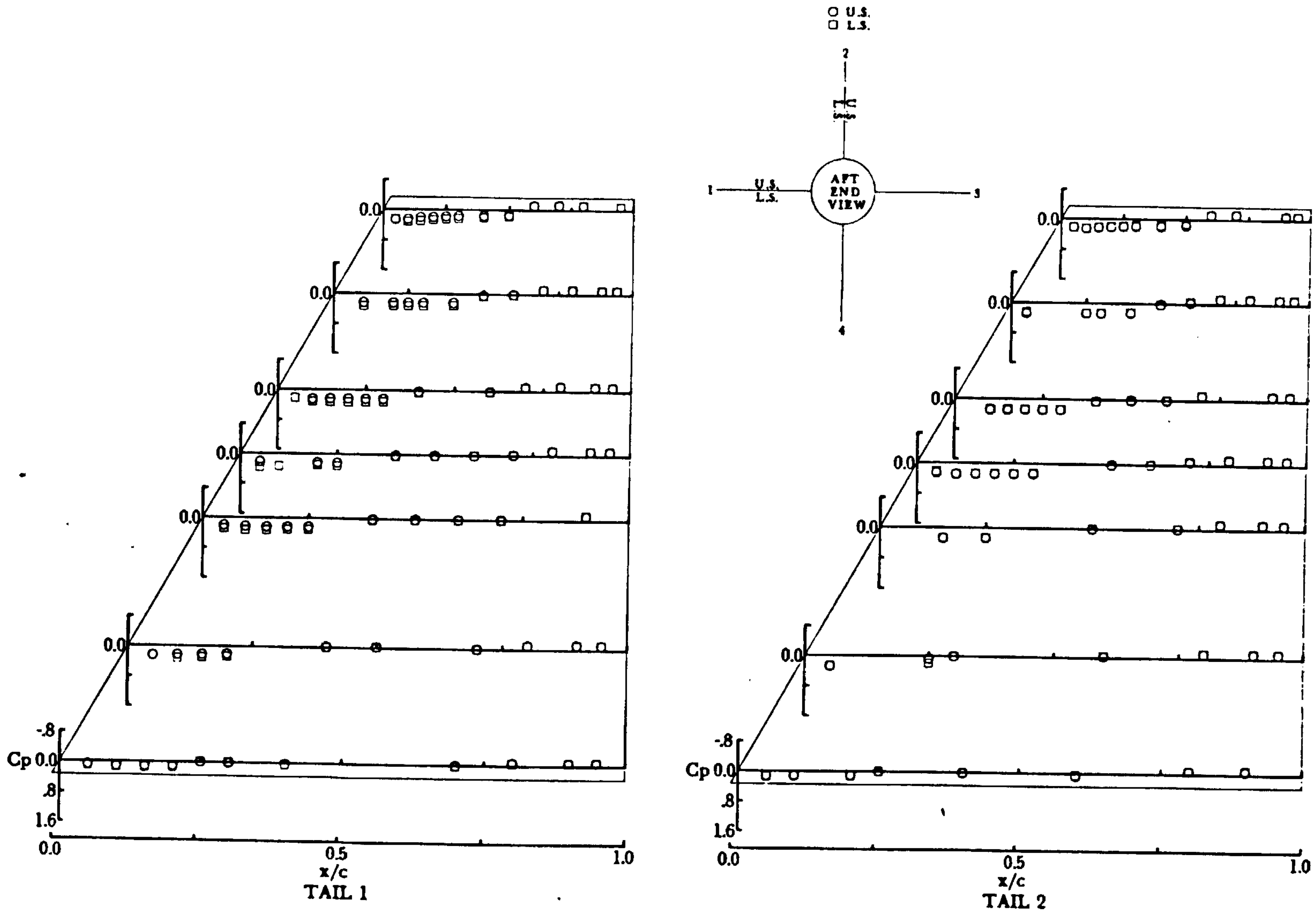

(a) $\alpha = -0.04°$.

Figure 16.- Pressure coefficients for tail planform B at $M = 2.36$, $\phi = 90°$, and $\delta = 0°$.

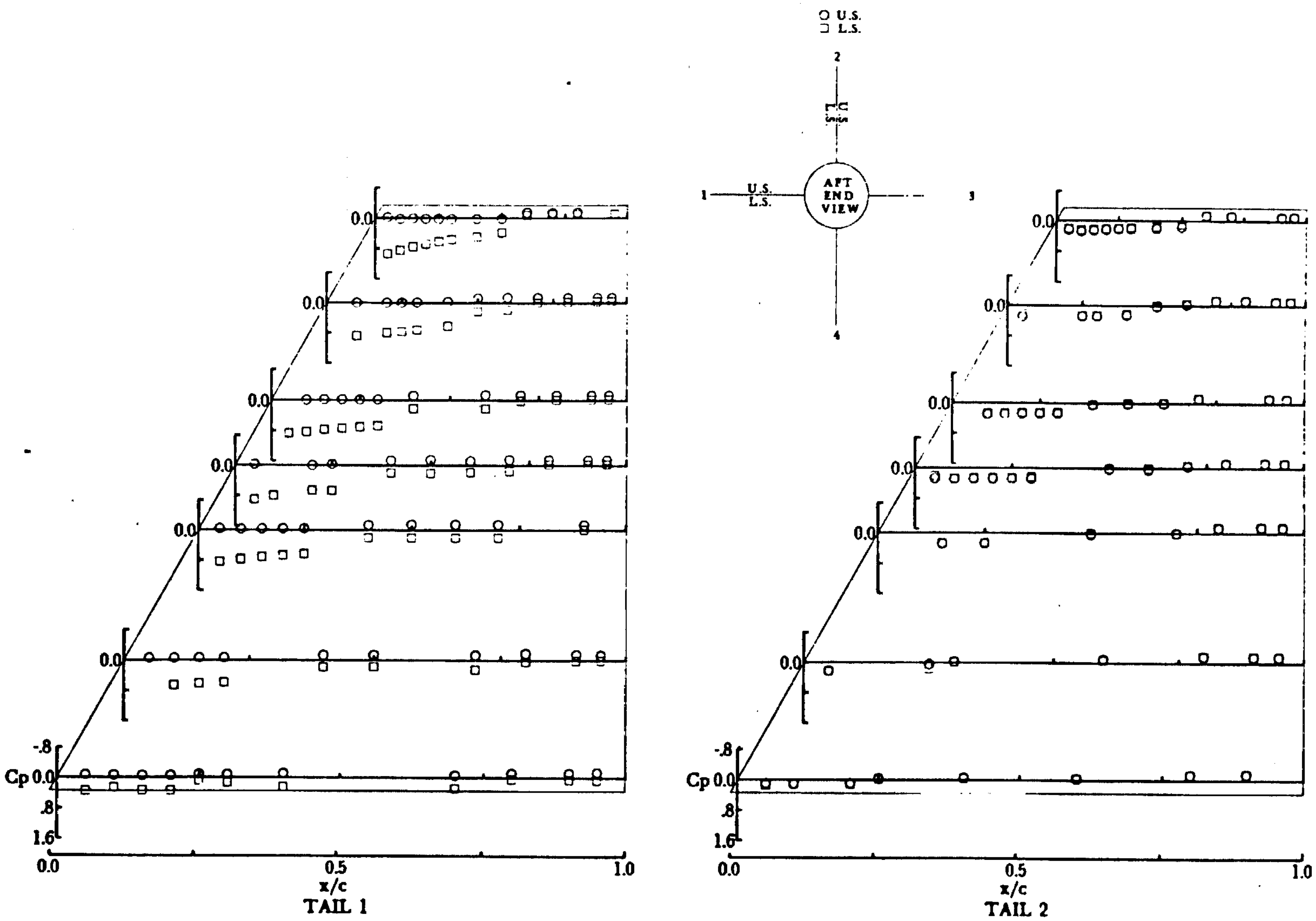

(b) α = 9.95°.

Figure 16.- Continued.

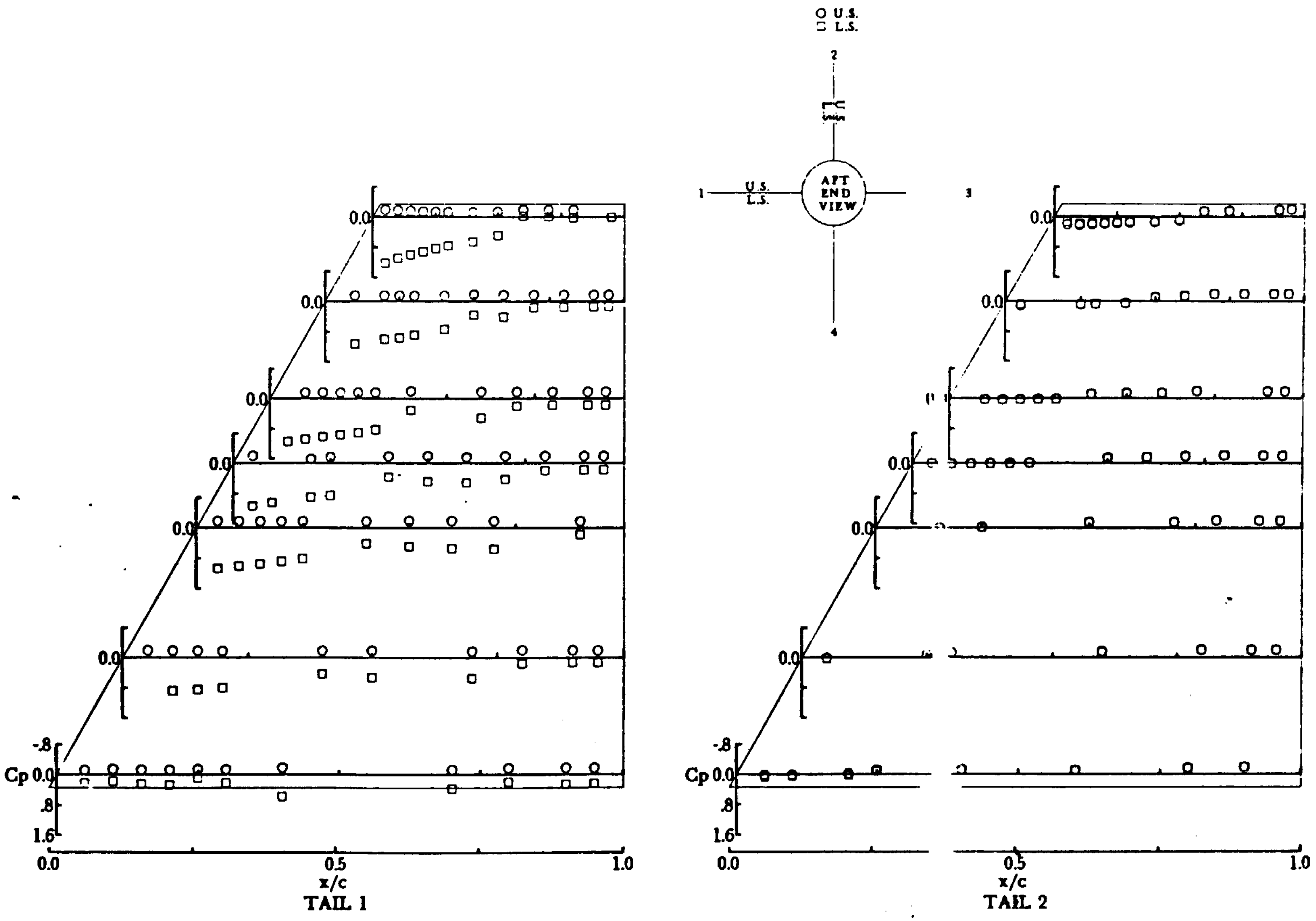

(e) α = 19.95°.

Figure 16.- Concluded.

ORIGINAL PAGE IS
OF POOR QUALITY

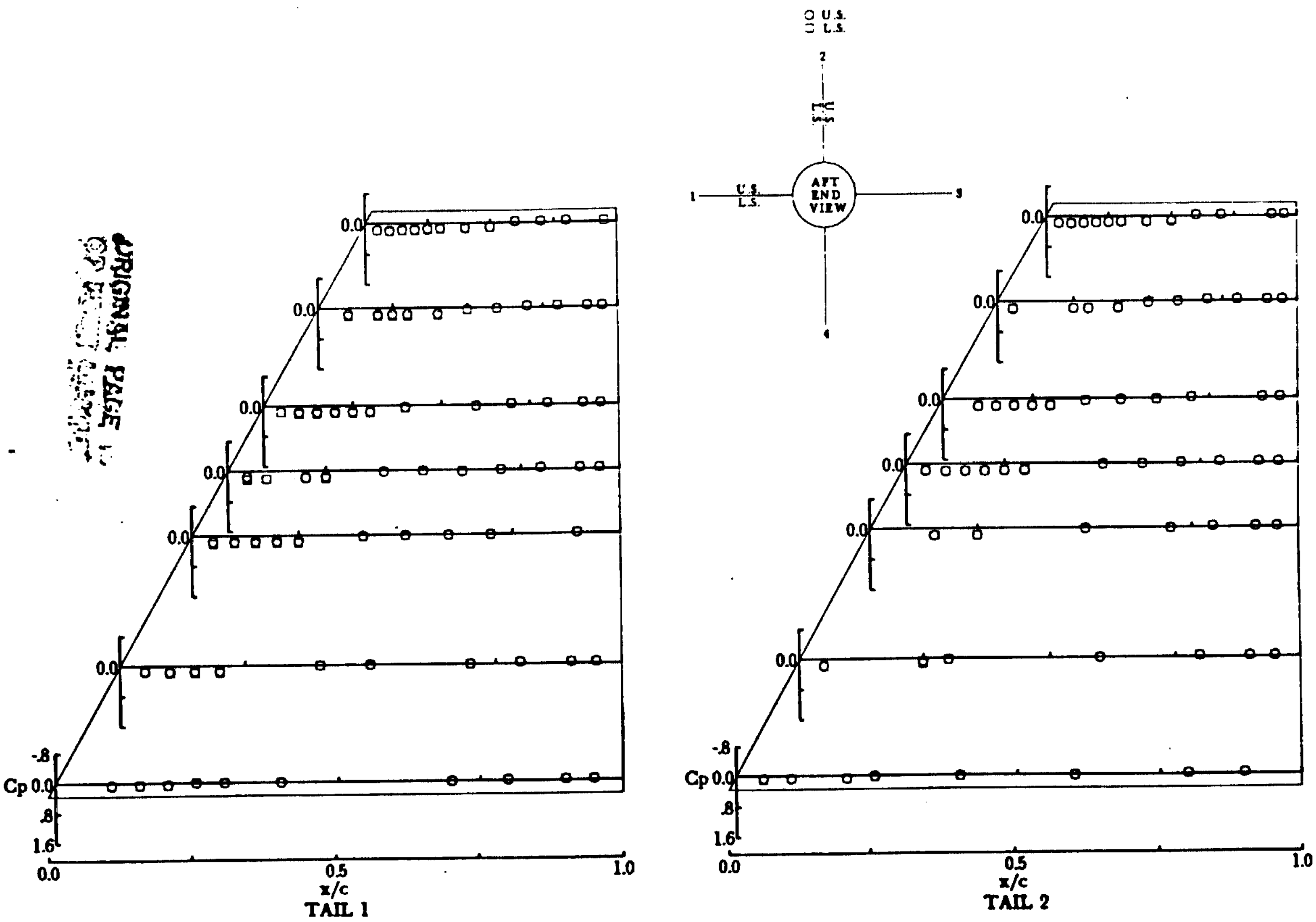

(a) α = -0.20°.

Figure 17.- Pressure coefficients for tail planform B at M = 3.70, ϕ = 90°, and δ = 0°.

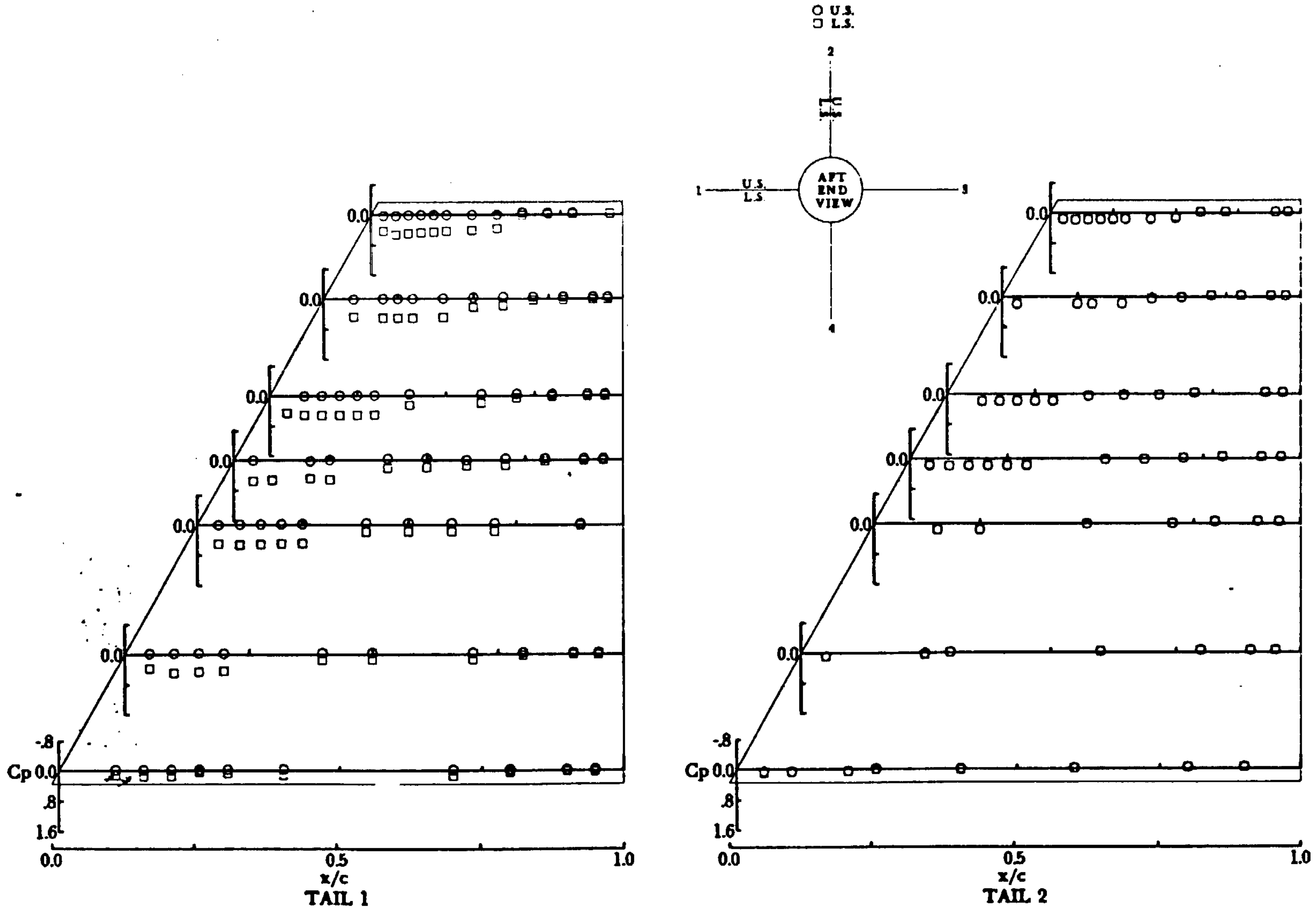

(b) α = 9.80°.

Figure 17.- Continued.

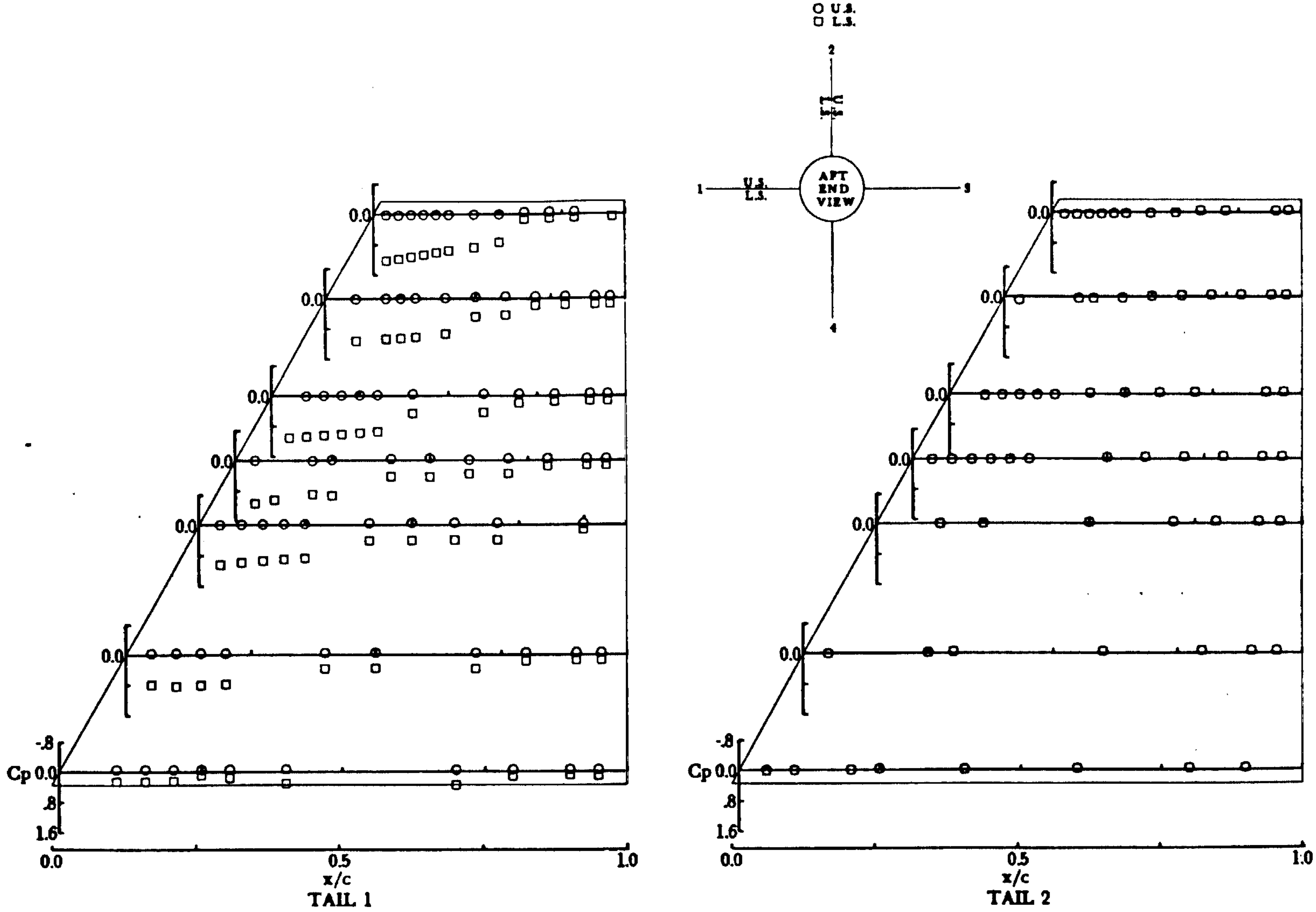

(c) α = 19.80°.

Figure 17.- Concluded.

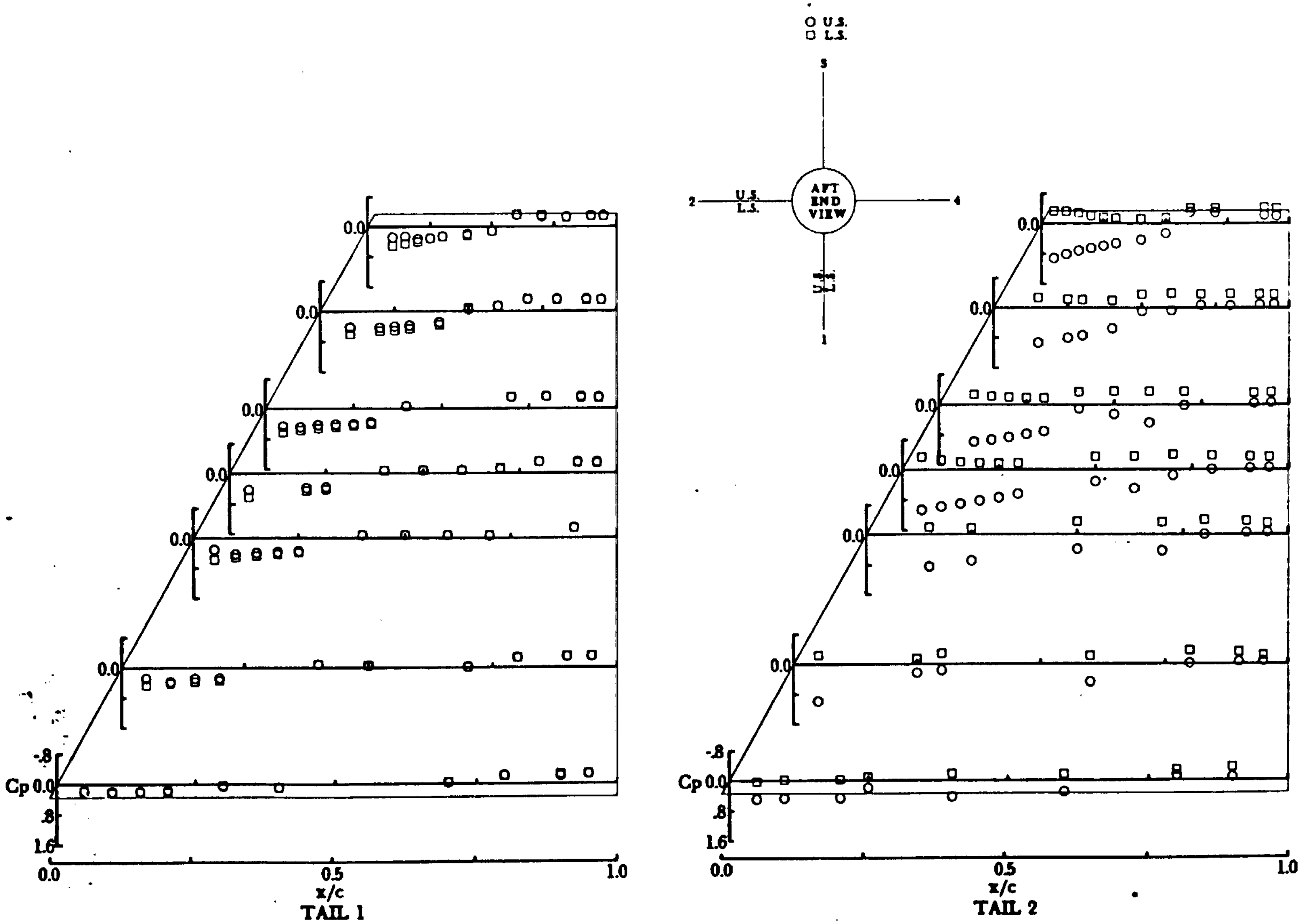

(a) α = 0.68°.

Figure 18.- Pressure coefficients for tail planform B at M = 1.60, φ = 0°, and $\delta_{2,4} = -15^\circ$.

ORIGINAL PAGE IS
OF POOR QUALITY

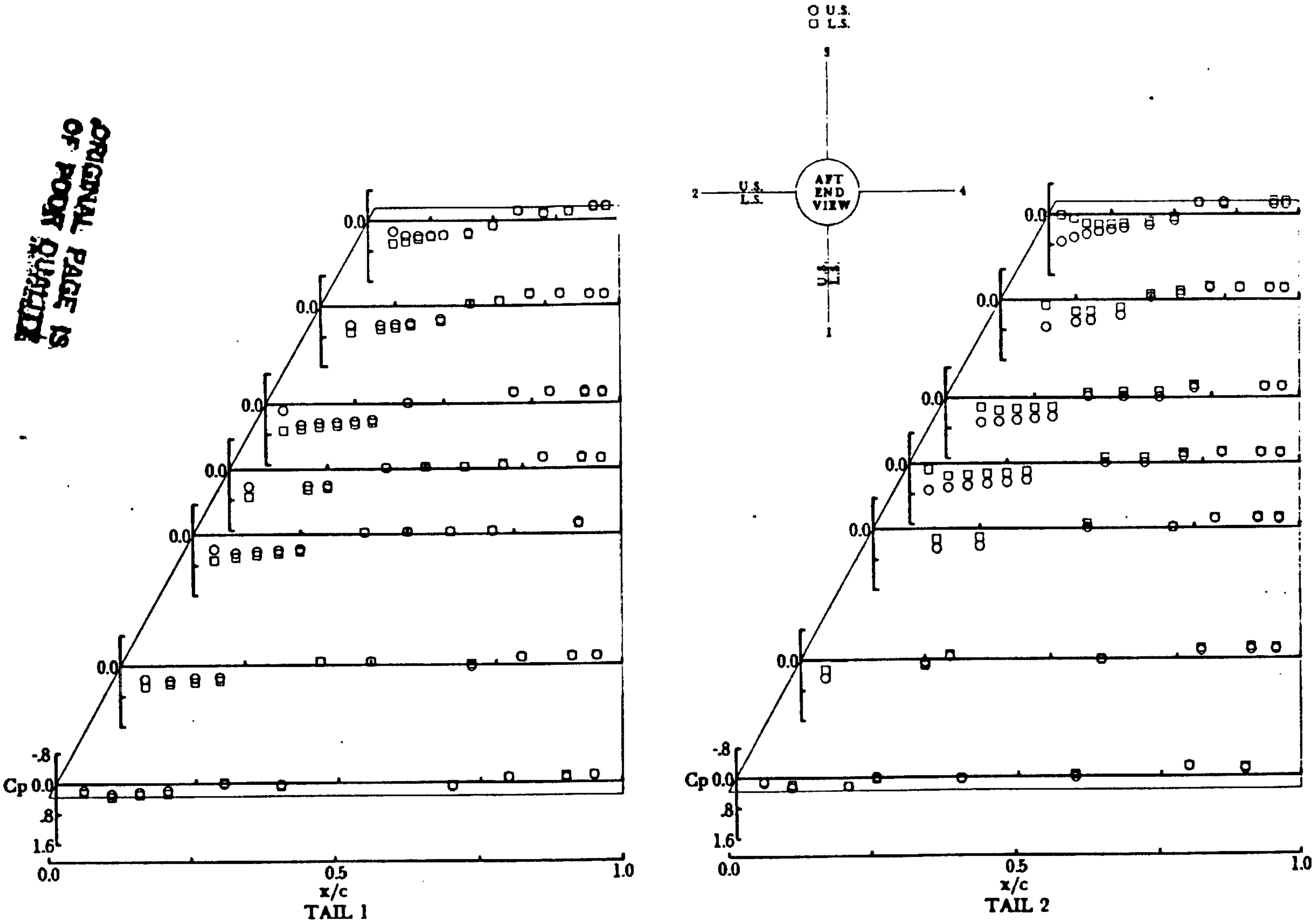

(b) α = 10.75°.

Figure 18.- Continued.

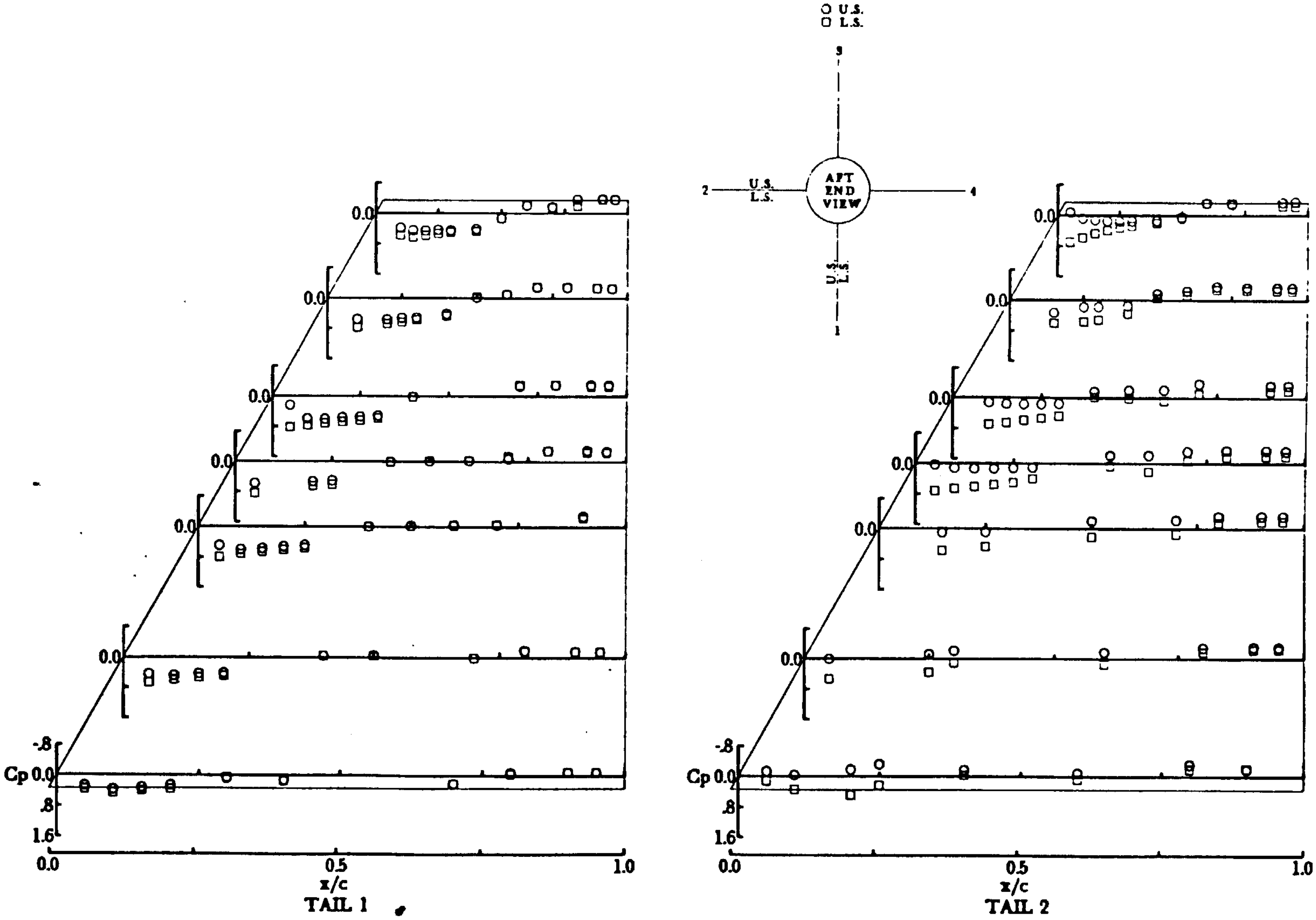

(c) α = 18.66°.

Figure 18.- Concluded.

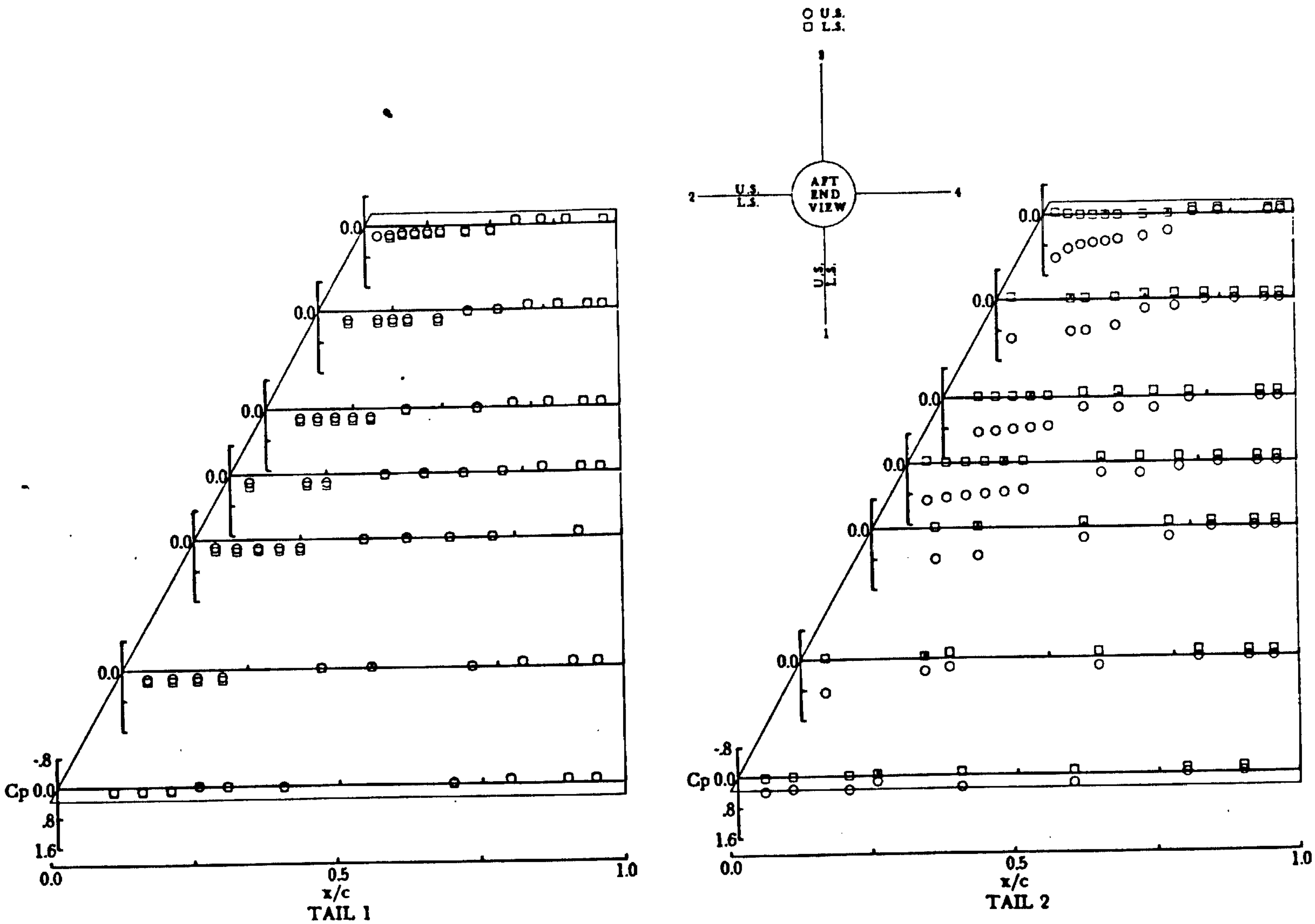

(a) α = -0.08°.

Figure 19.- Pressure coefficients for tail planform B at $M = 2.36$, $\phi = 0^{\circ}$, and $\delta_{2,4} = -15^{\circ}$.

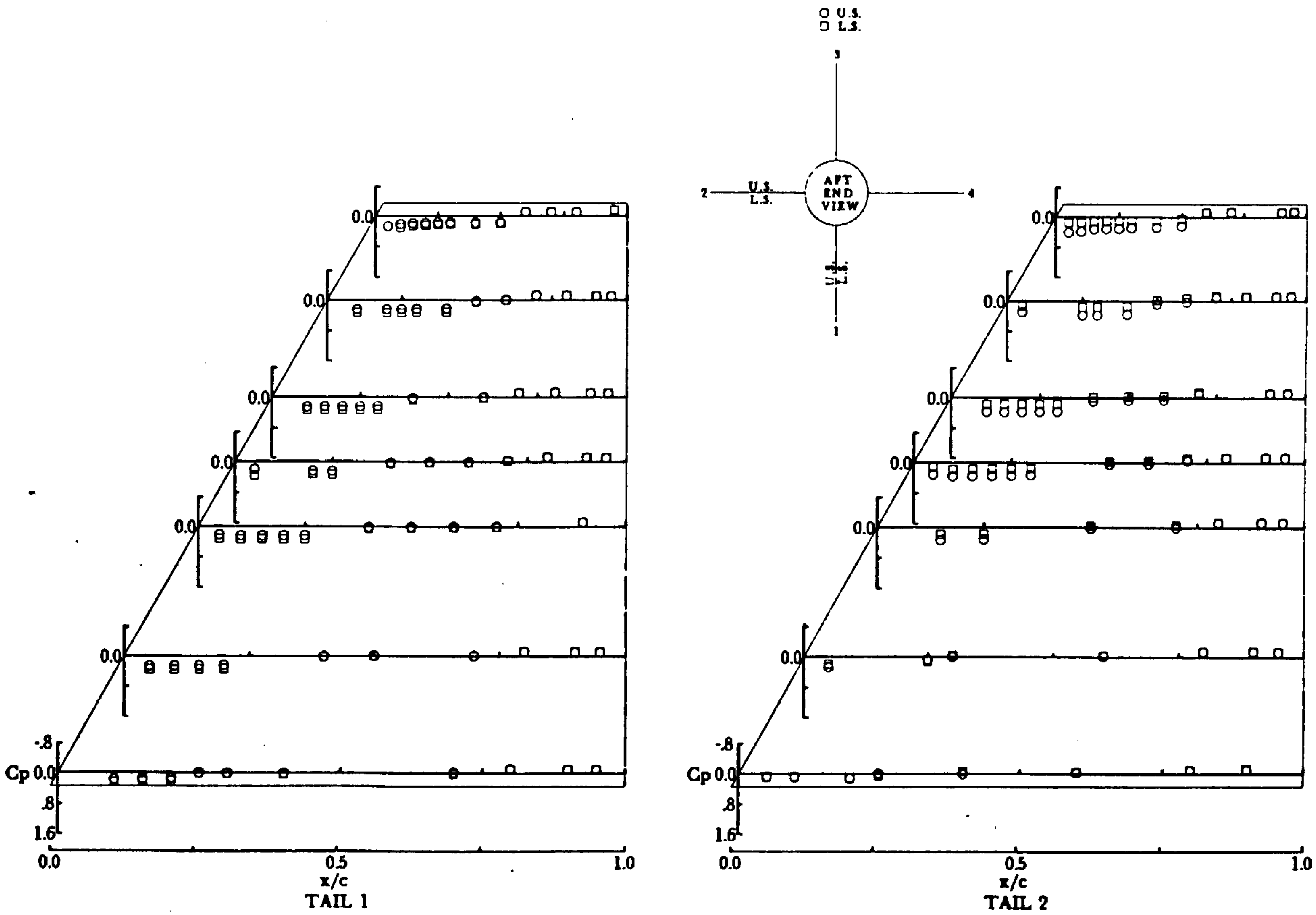

(b) α = 9.93°.

Figure 19.- Continued.

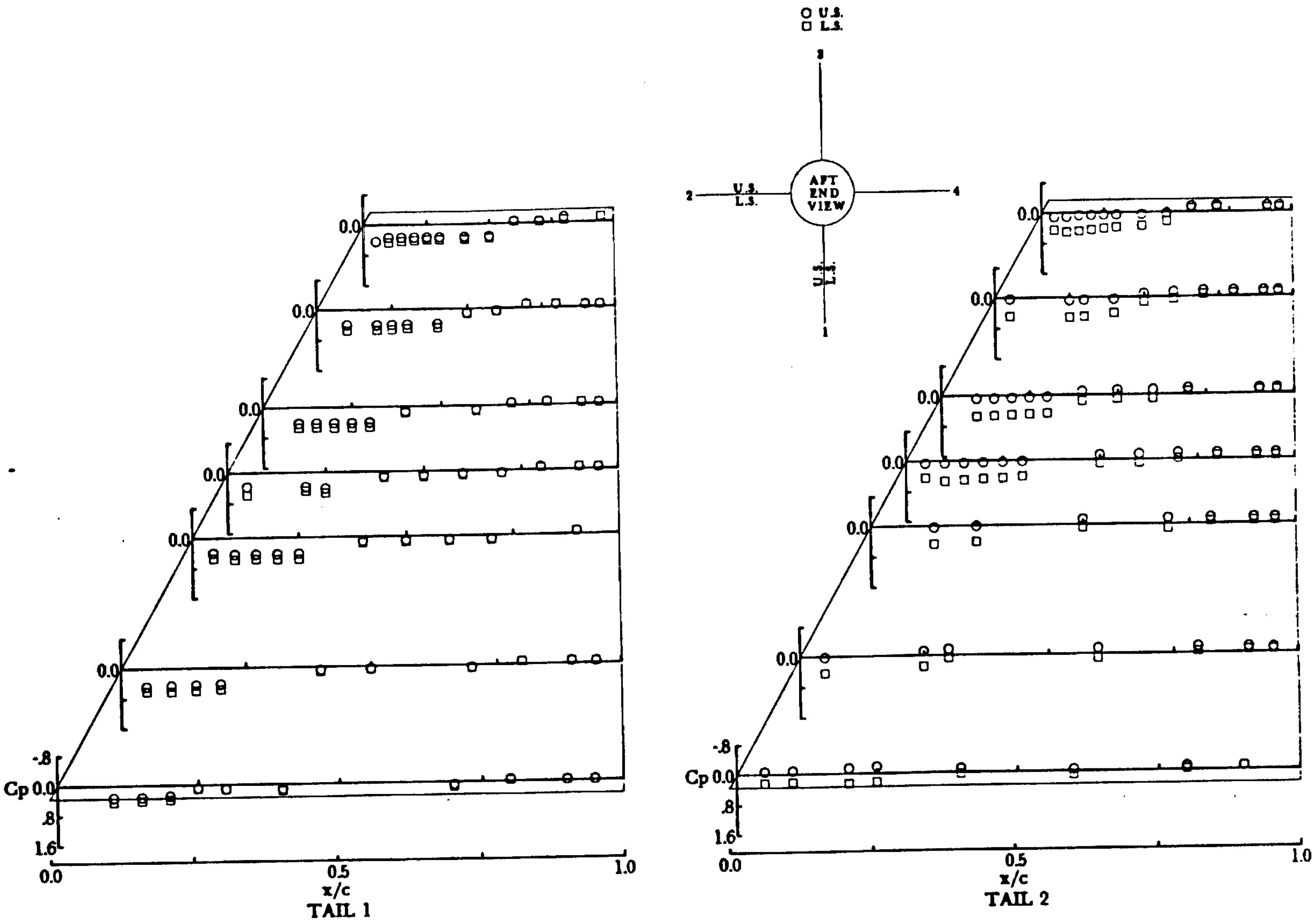

(c) α = 19.92°.

Figure 19.- Concluded.

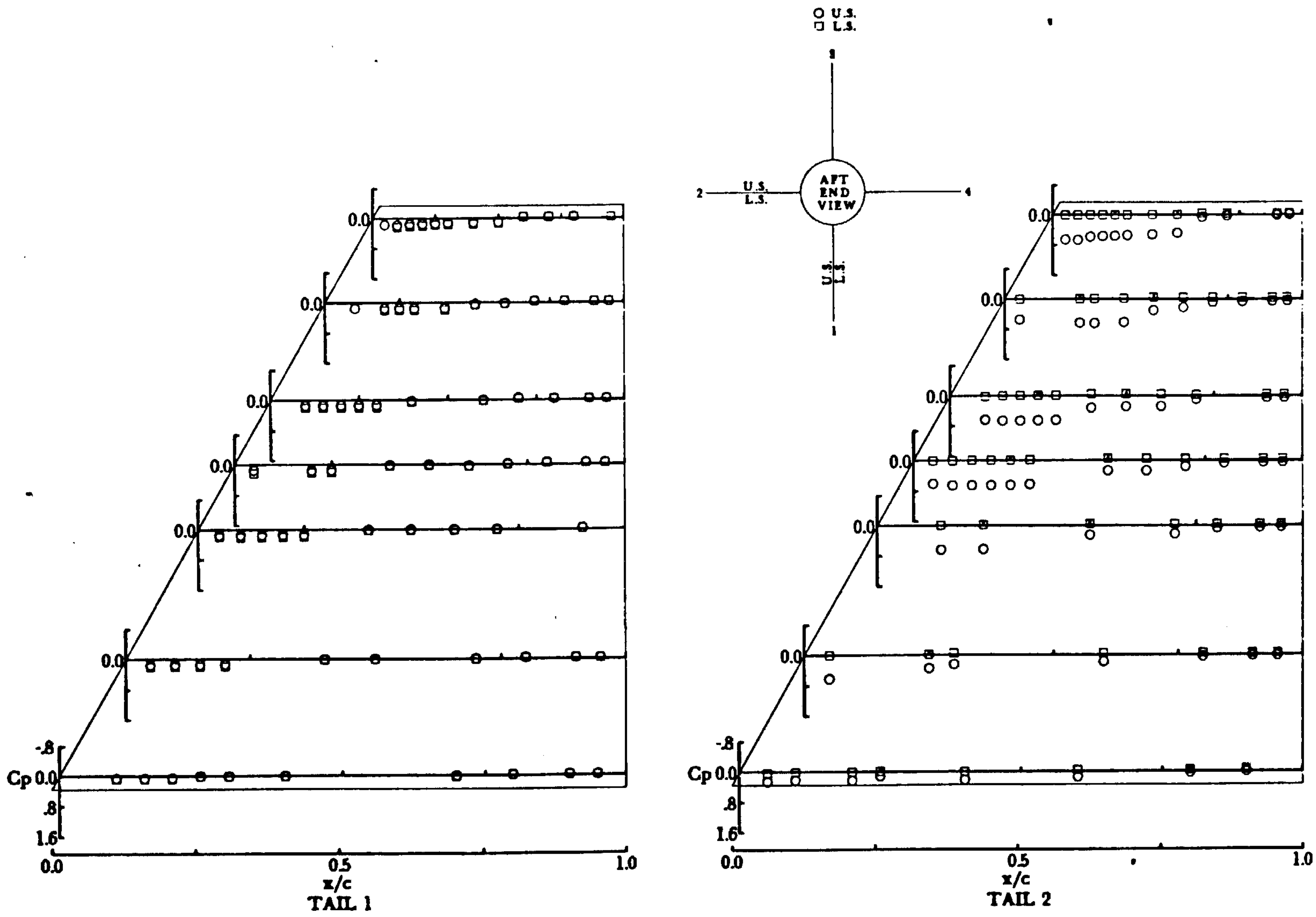

(a) $\alpha = -0.15^{\circ}$.

Figure 20.- Pressure coefficients for tail planform B at $M = 3.70$, $\phi = 0^{\circ}$, and $\delta_{2,4} = -15^{\circ}$.

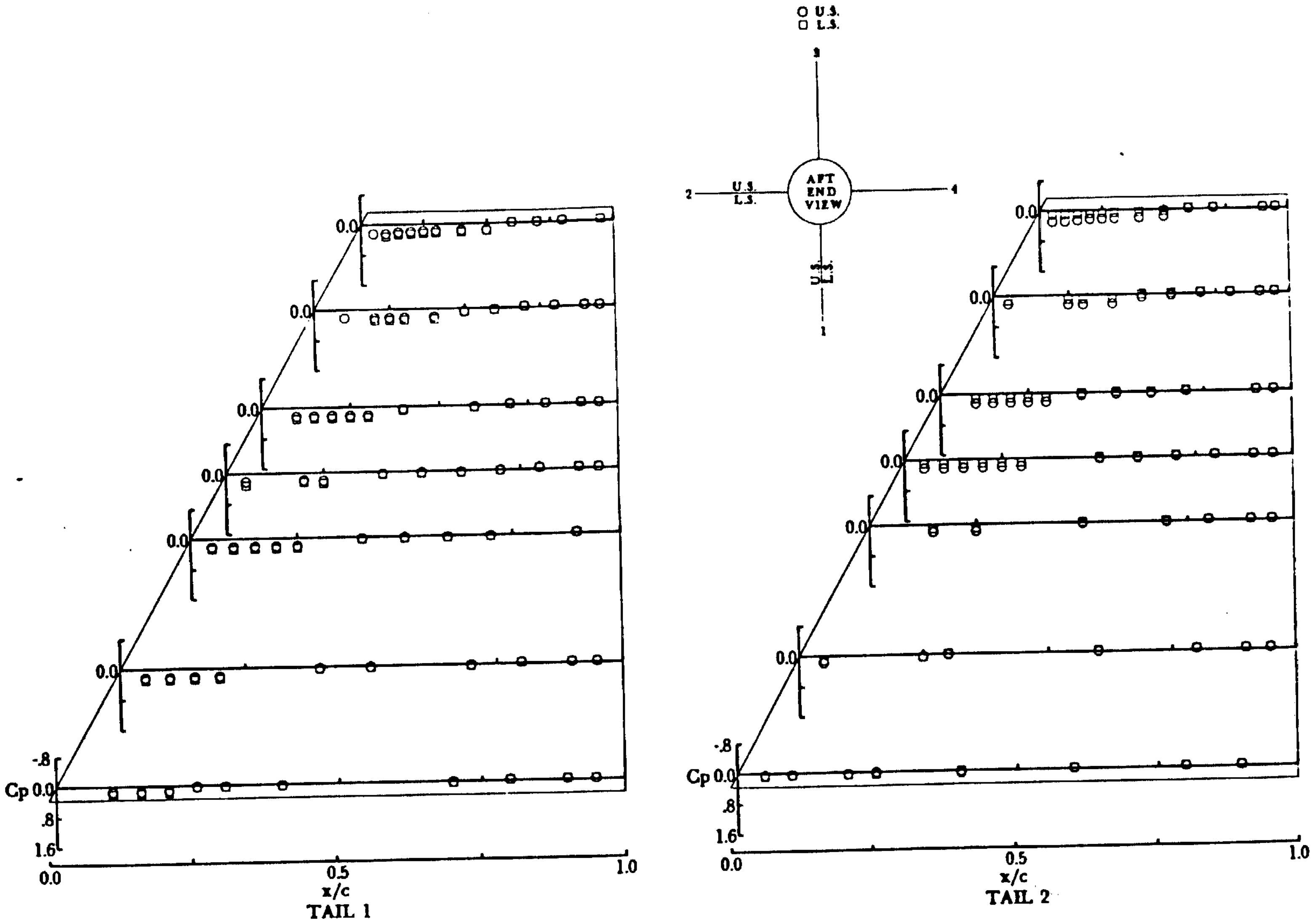

(b) α = 9.85°.

Figure 20.- Continued.

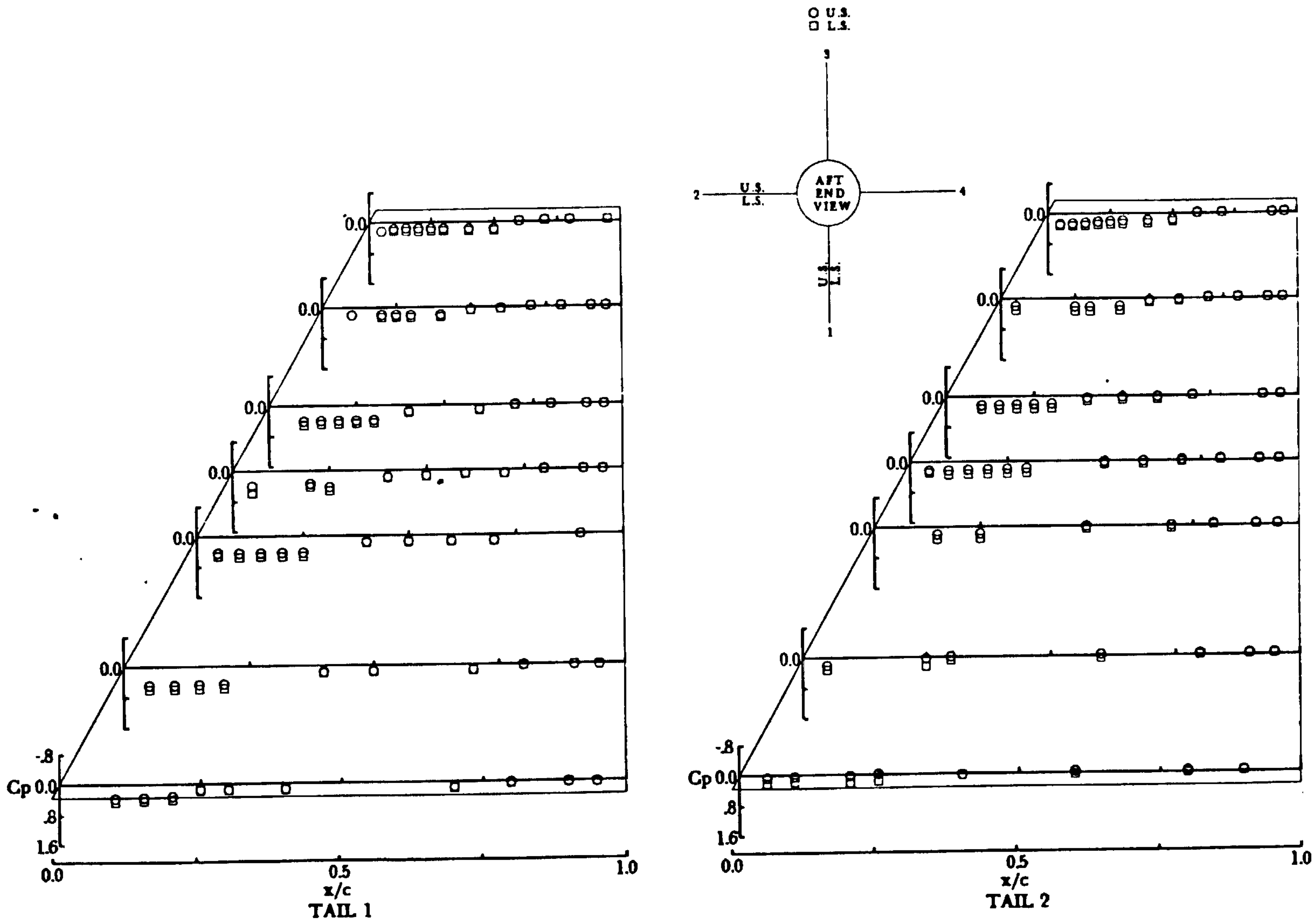

(c) α = 19.85°.

Figure 20.- Concluded.

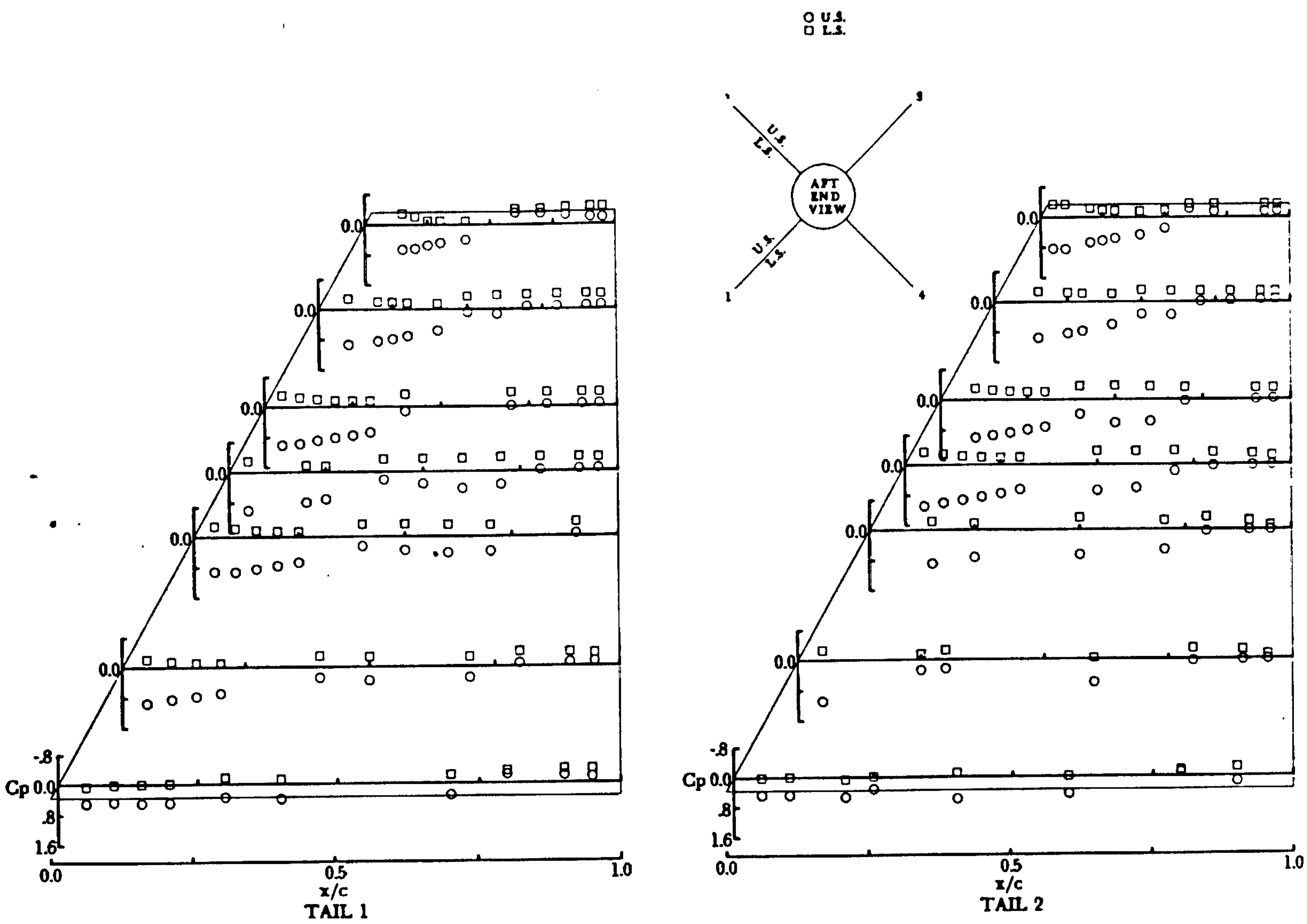

(a) α = 0.75°.

Figure 21.- Pressure coefficients for tail planform B at M = 1.60, ϕ = 45°, and δ = -15°.

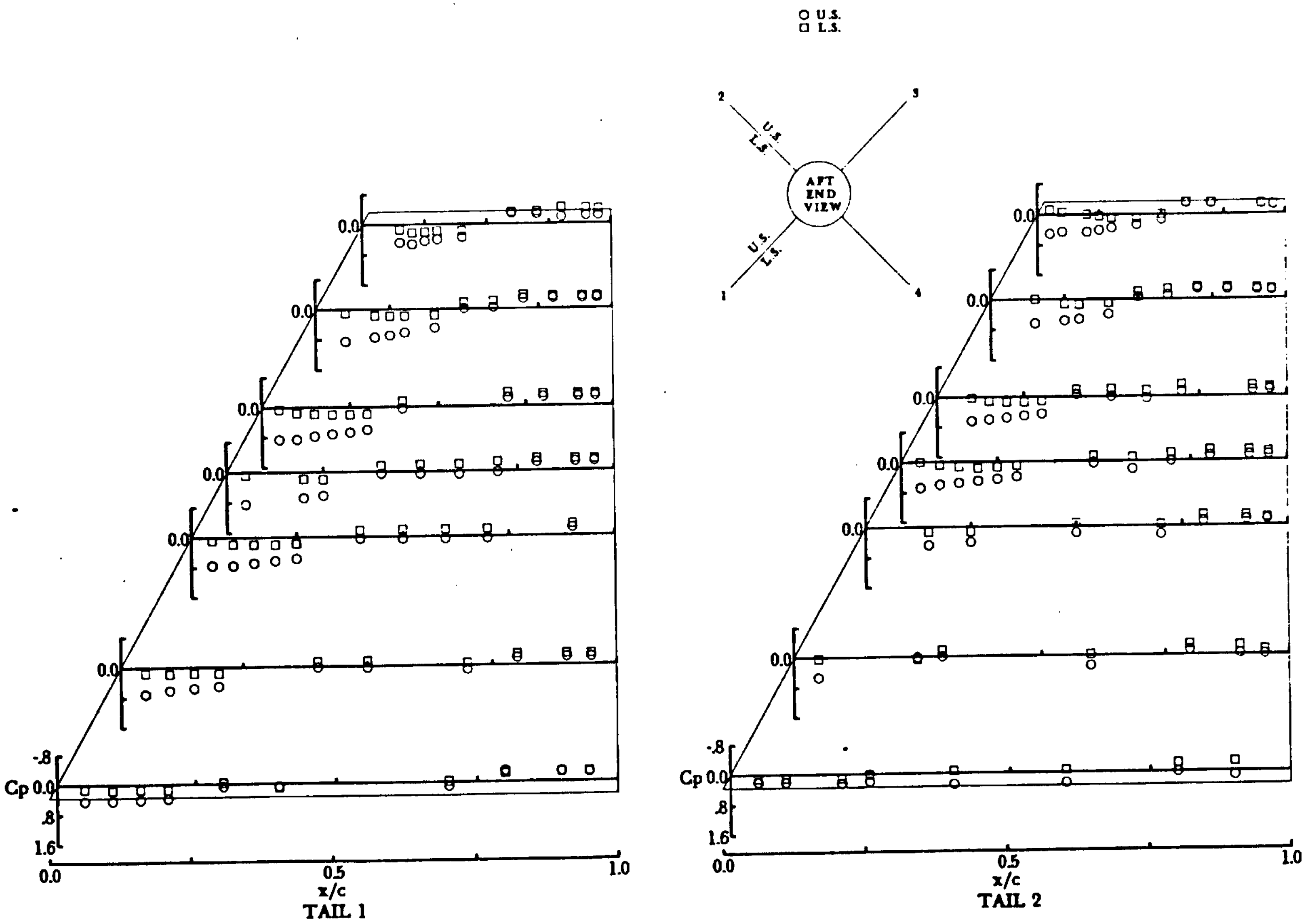

(b) α = 10.75°.

Figure 21.- Continued.

ORIGINAL PAGE IS
OF POOR QUALITY

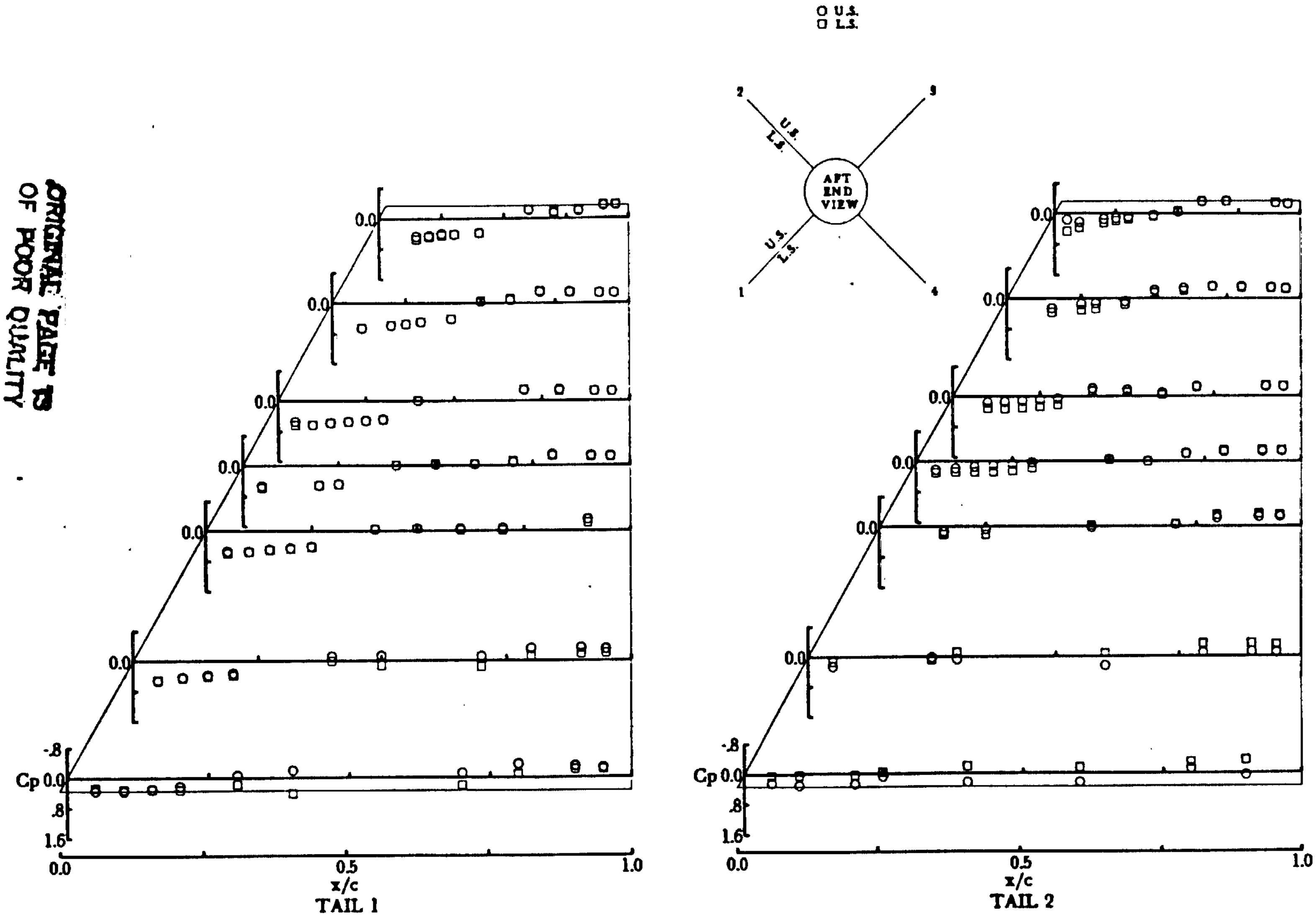

(c) α = 18.76°.

Figure 21.- Concluded.

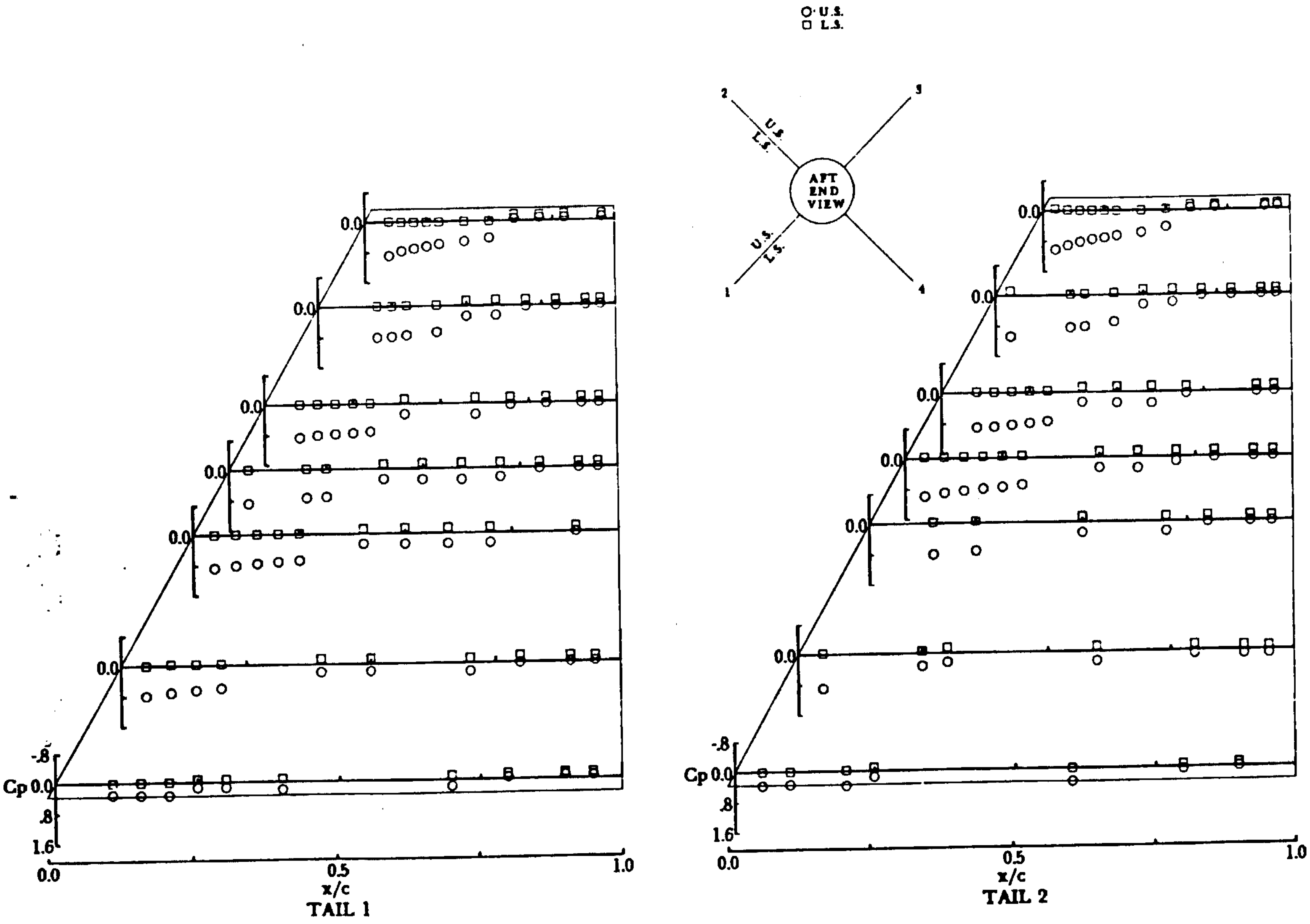

(a) α = -0.15°.

Figure 22.- Pressure coefficients for tail planform B at M = 2.36, ϕ = 45°, and δ = -15°.

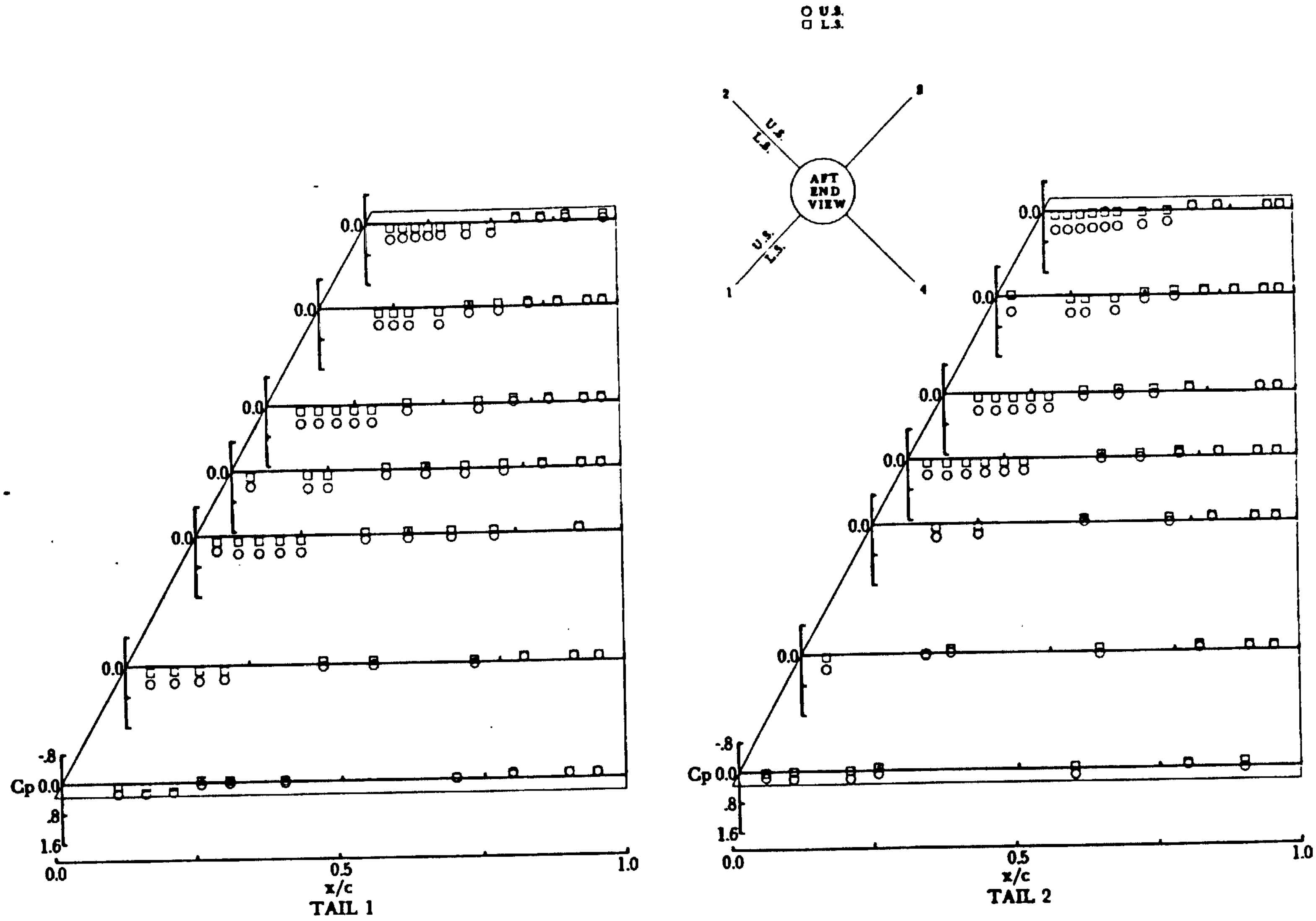

(b) α = 9.95°.

Figure 22.- Continued.

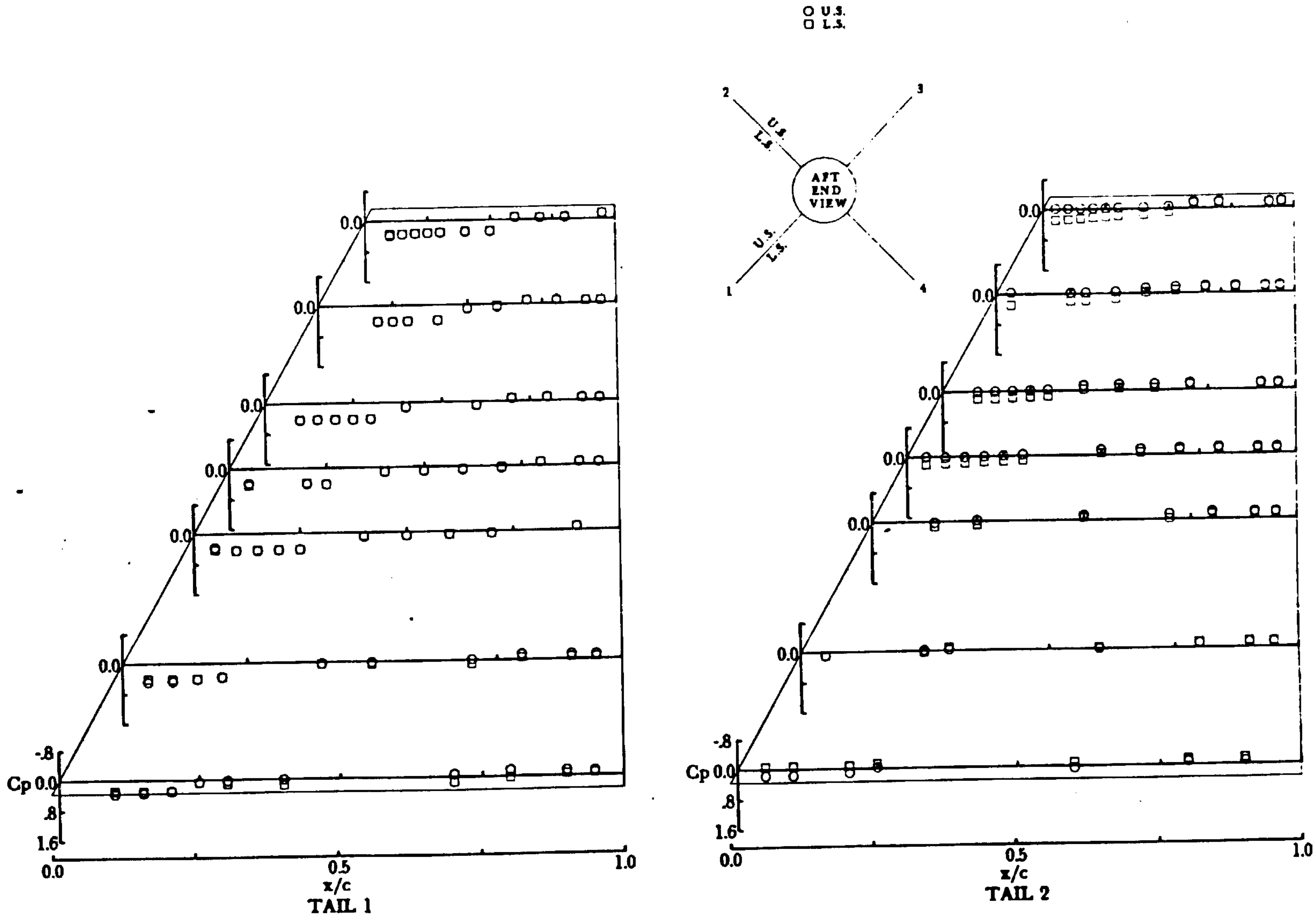

(c) α = 19.95°.

Figure 22.- Concluded.

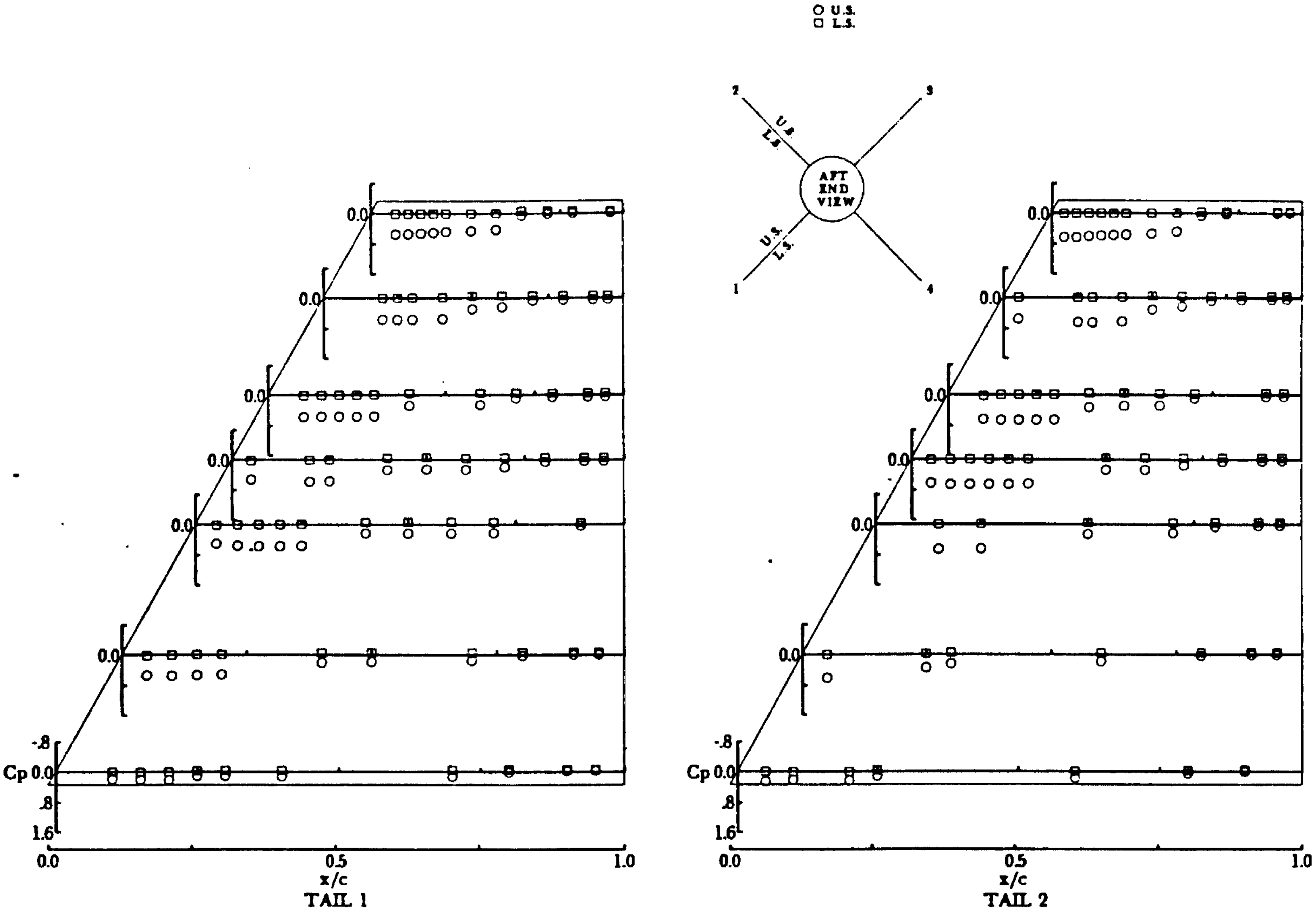

(a) α = -0.30°.

Figure 23.- Pressure coefficients for tail planform B at M = 3.70, ϕ = 45°, and δ = -15°.

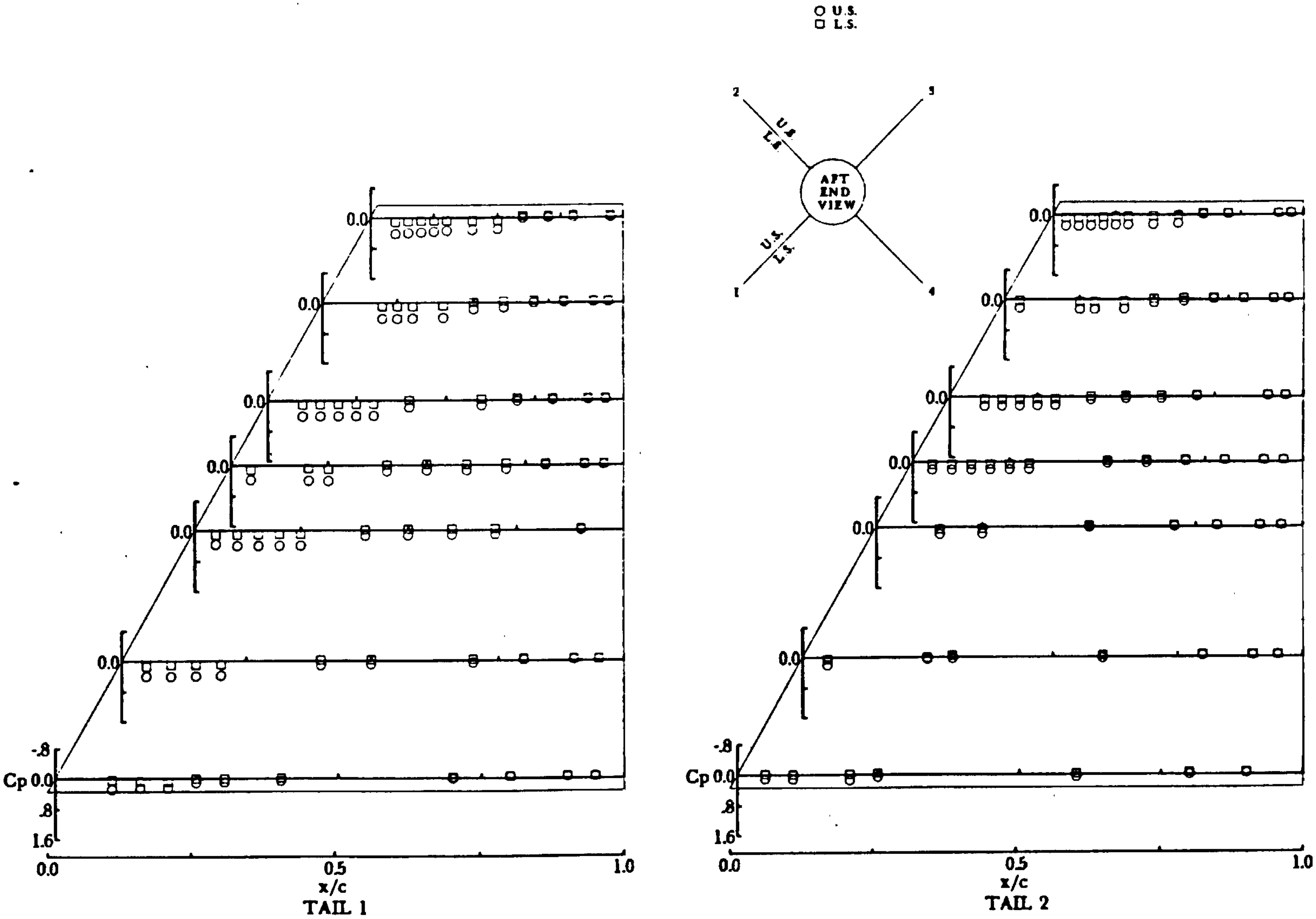

(b) α = 9.71°.

Figure 23.- Continued.

ORIGINAL PAGE IS
OF POOR QUALITY

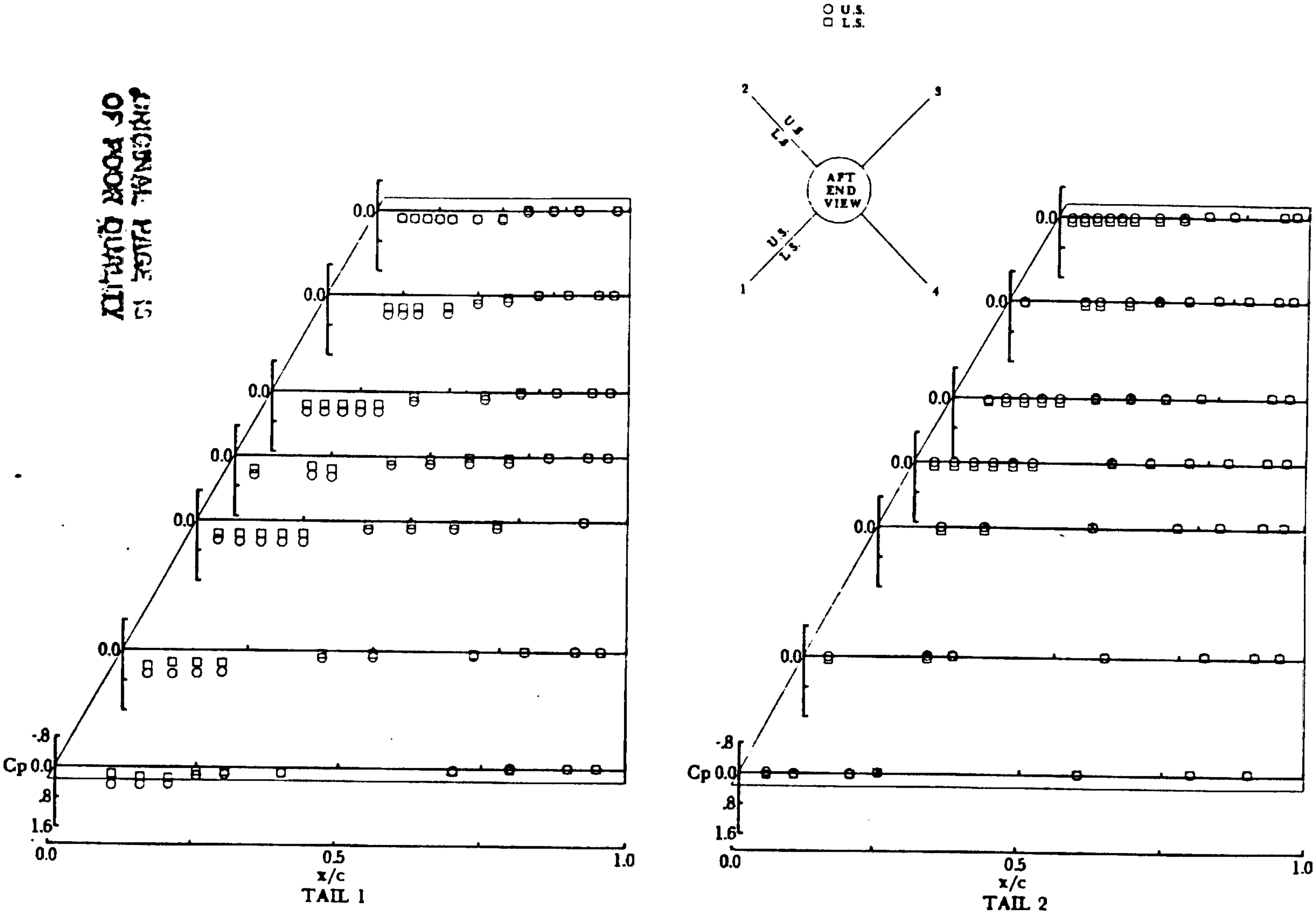

(c) α = 19.70°.

Figure 23.- Concluded.

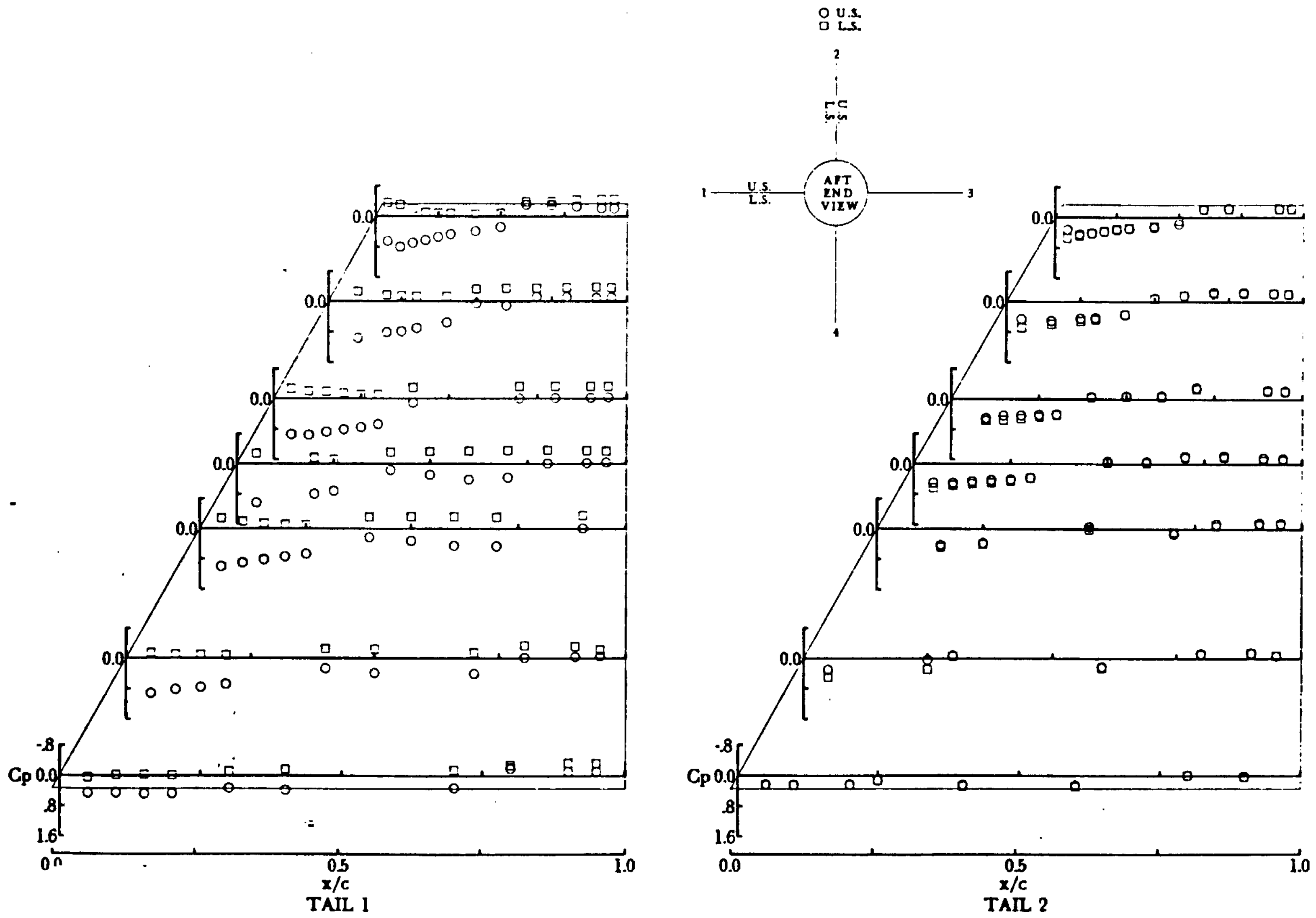

(a) $\alpha = 0.10^\circ$.

Figure 24.- Pressure coefficients for tail planform B at $M = 1.60$, $\phi = 90^\circ$, and $\delta_{1,3} = -15^\circ$.

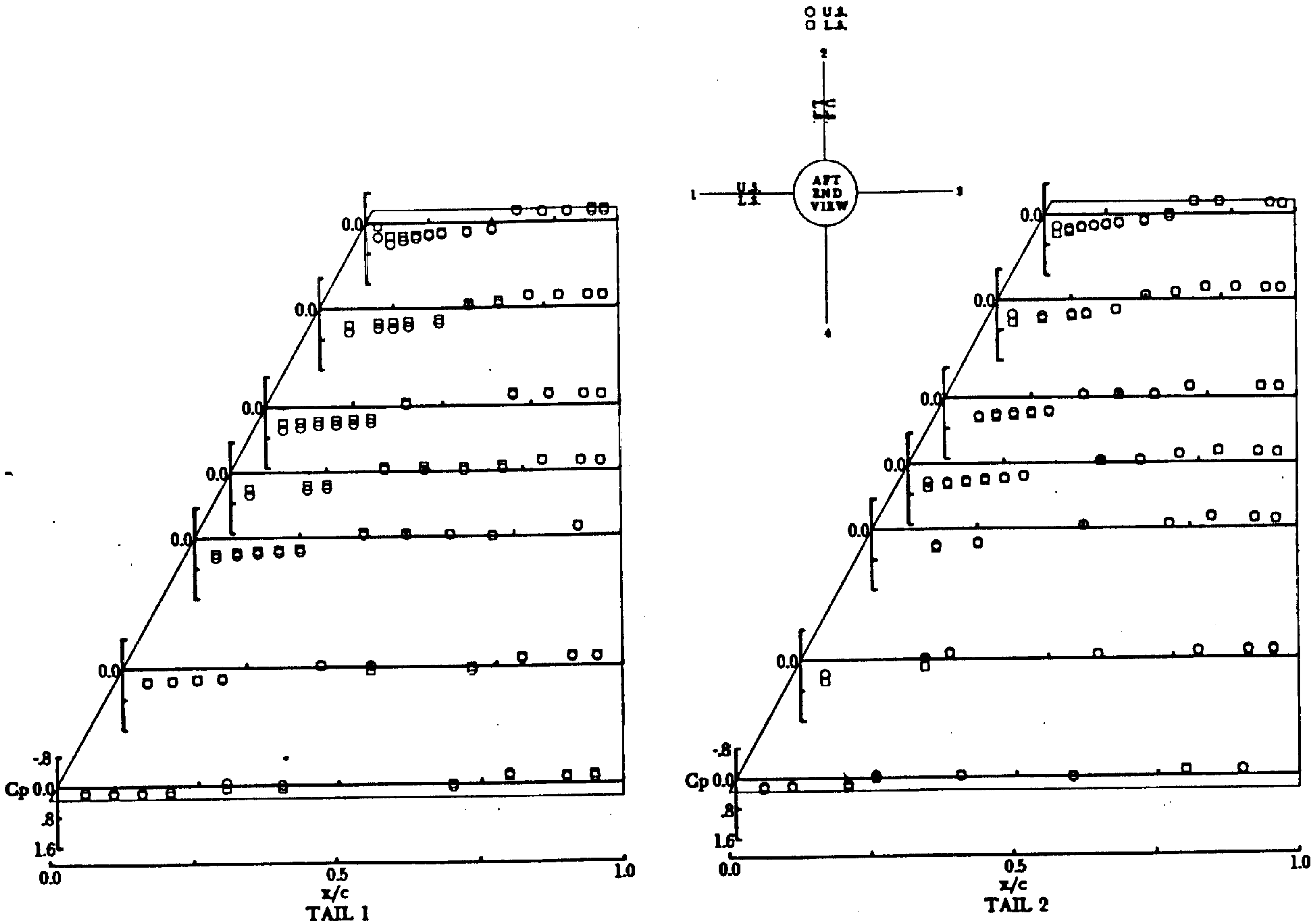

(b) α = 10.69°.

Figure 24.- Continued.

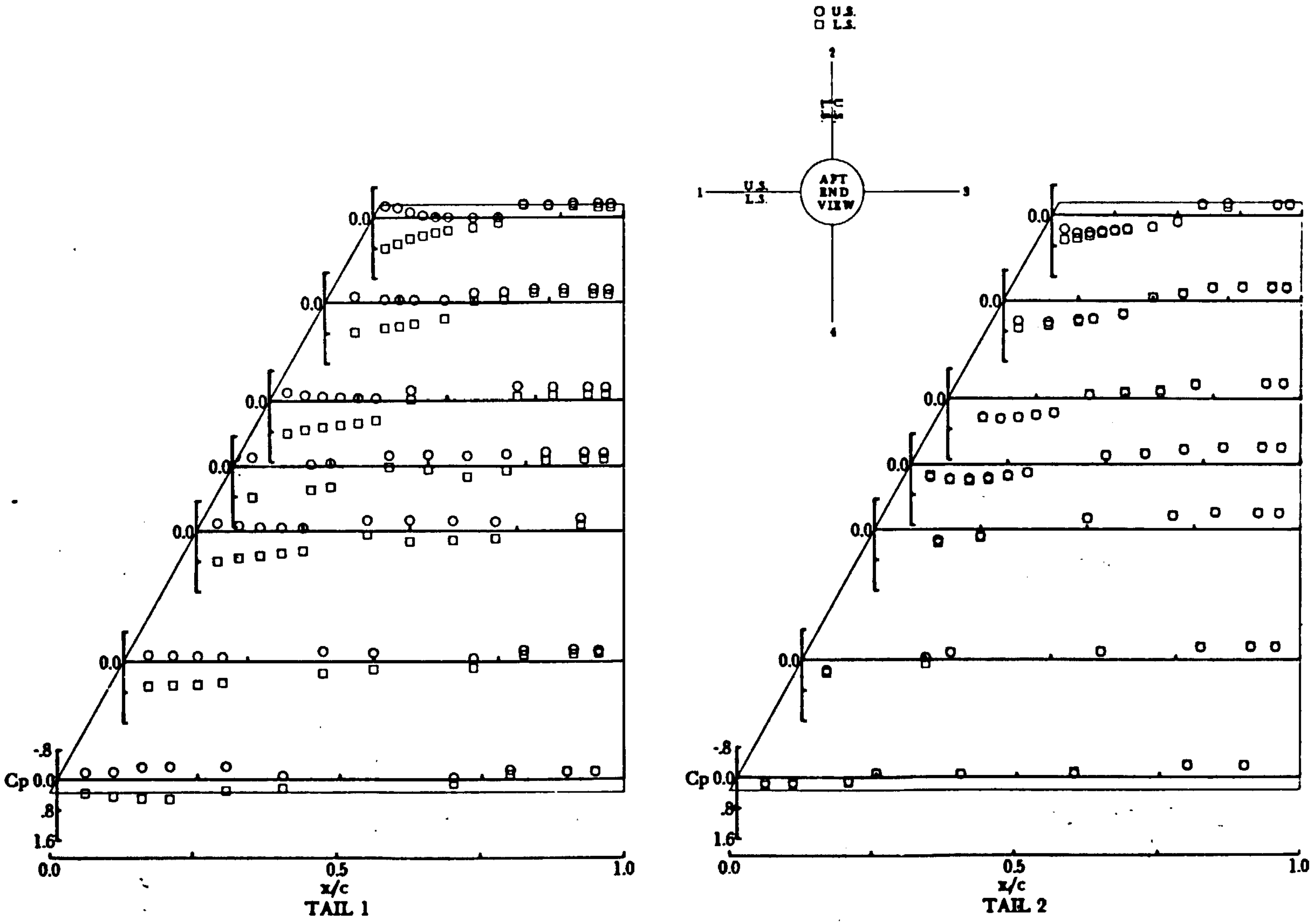

(c) $\alpha = 18.70^{\circ}$.

Figure 24.- Concluded.

ORIGINAL PAGE IS
OF POOR QUALITY

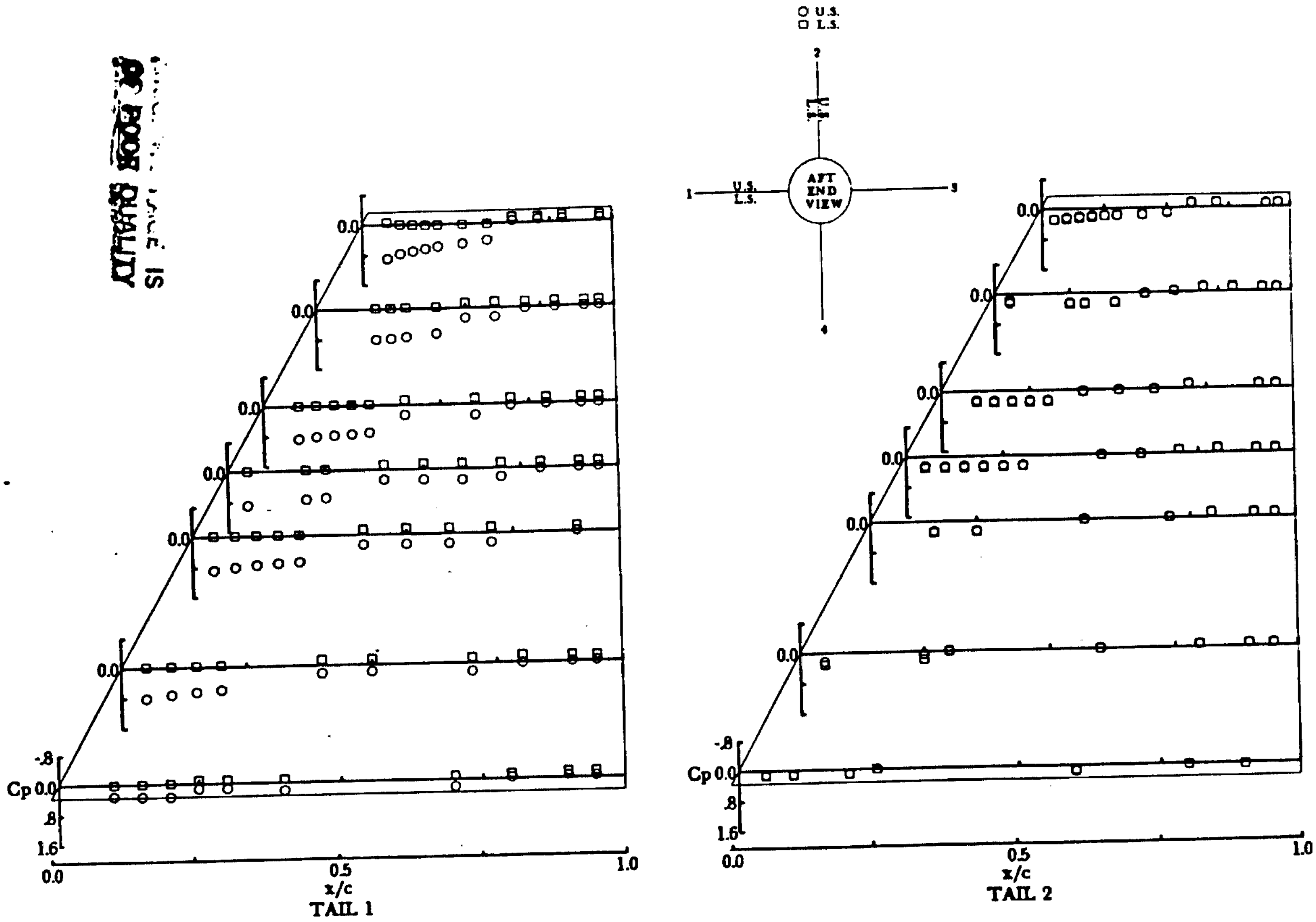

(a) α = -0.05°.

Figure 25.- Pressure coefficients for tail planform B at M = 2.36, ϕ = 90°, and $\delta_{1,3}$ = -15°.

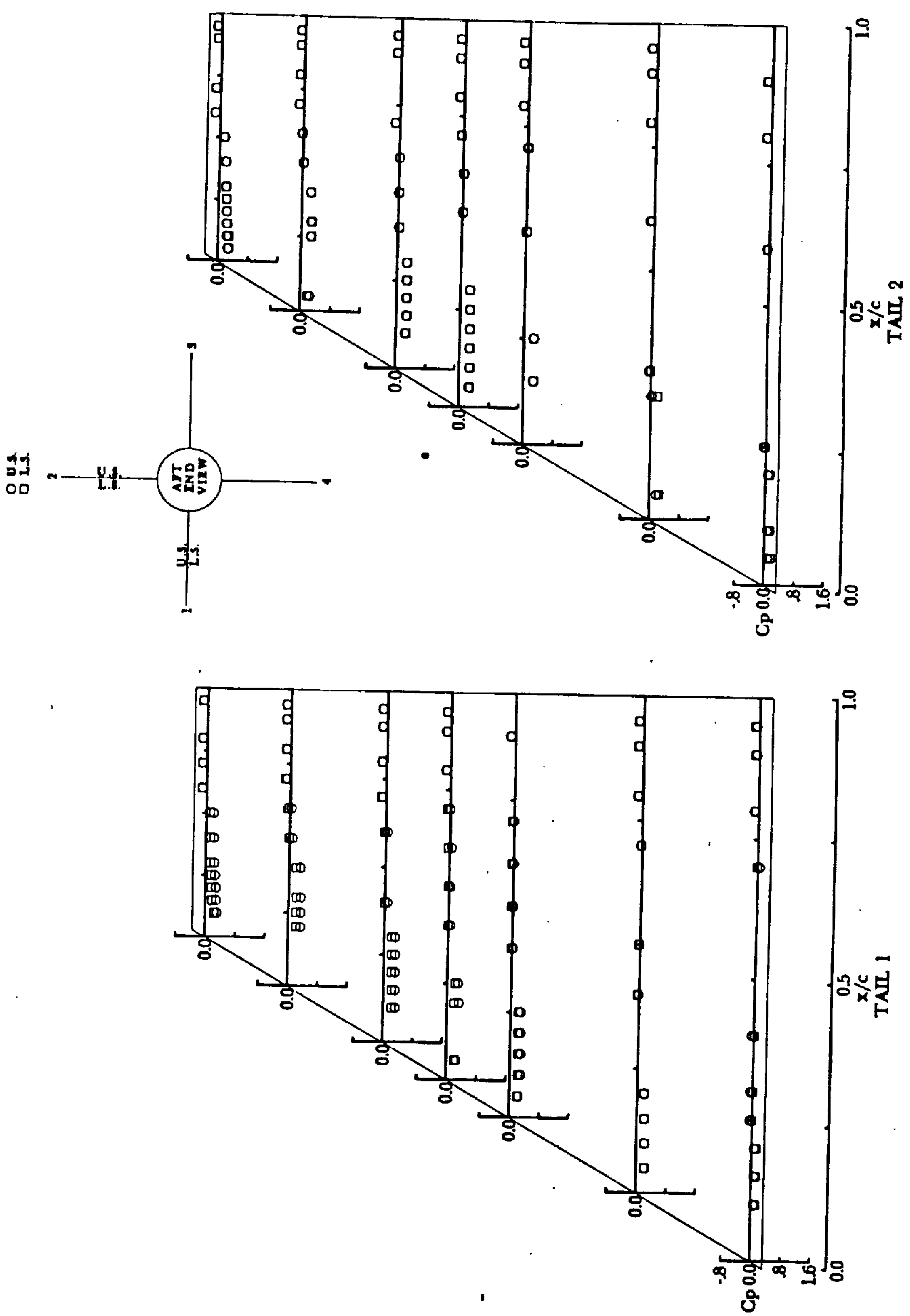

(b) α = 9.95°.

Figure 25.- Continued.

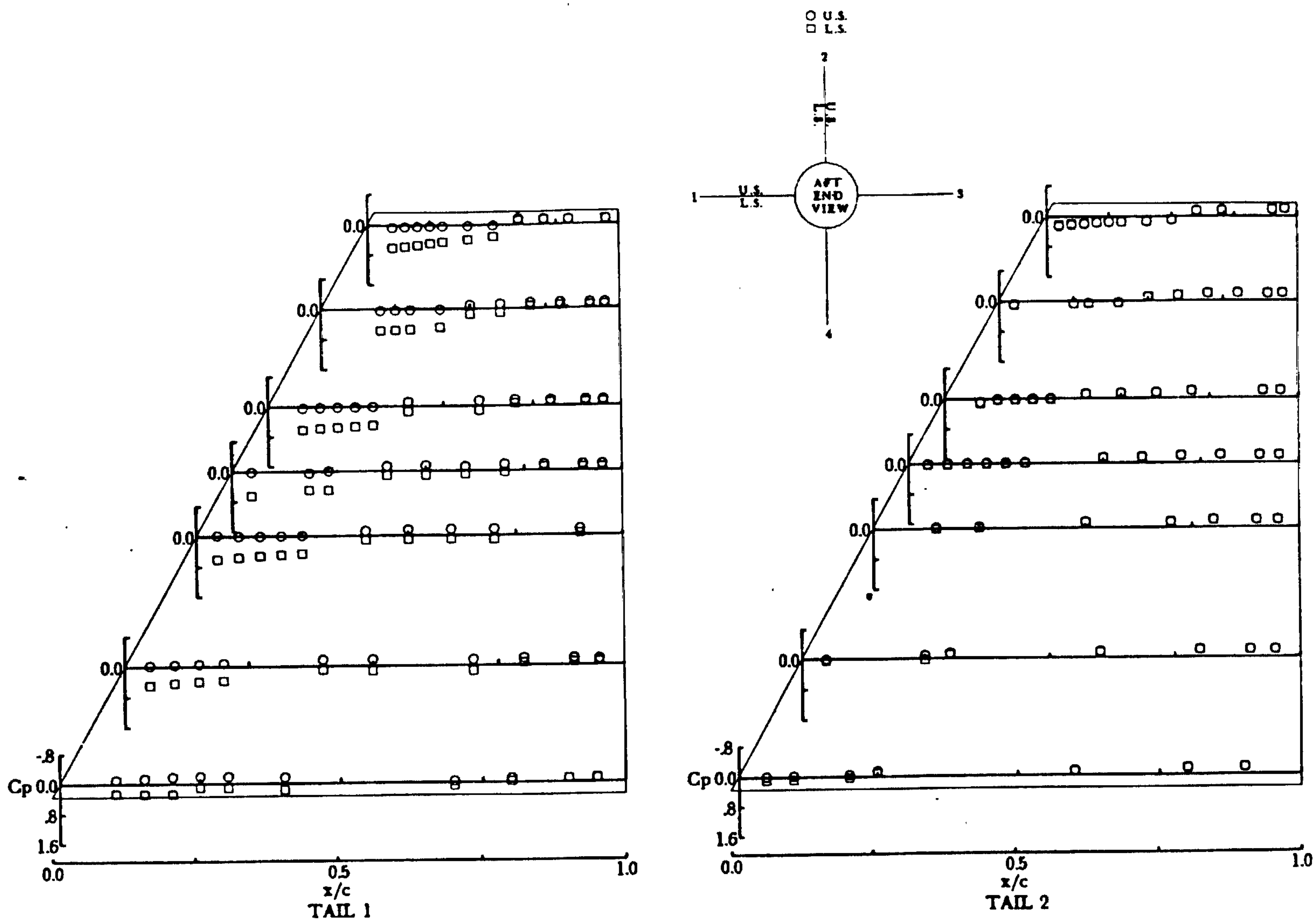

(c) α = 19.95°.

Figure 25.- Concluded.

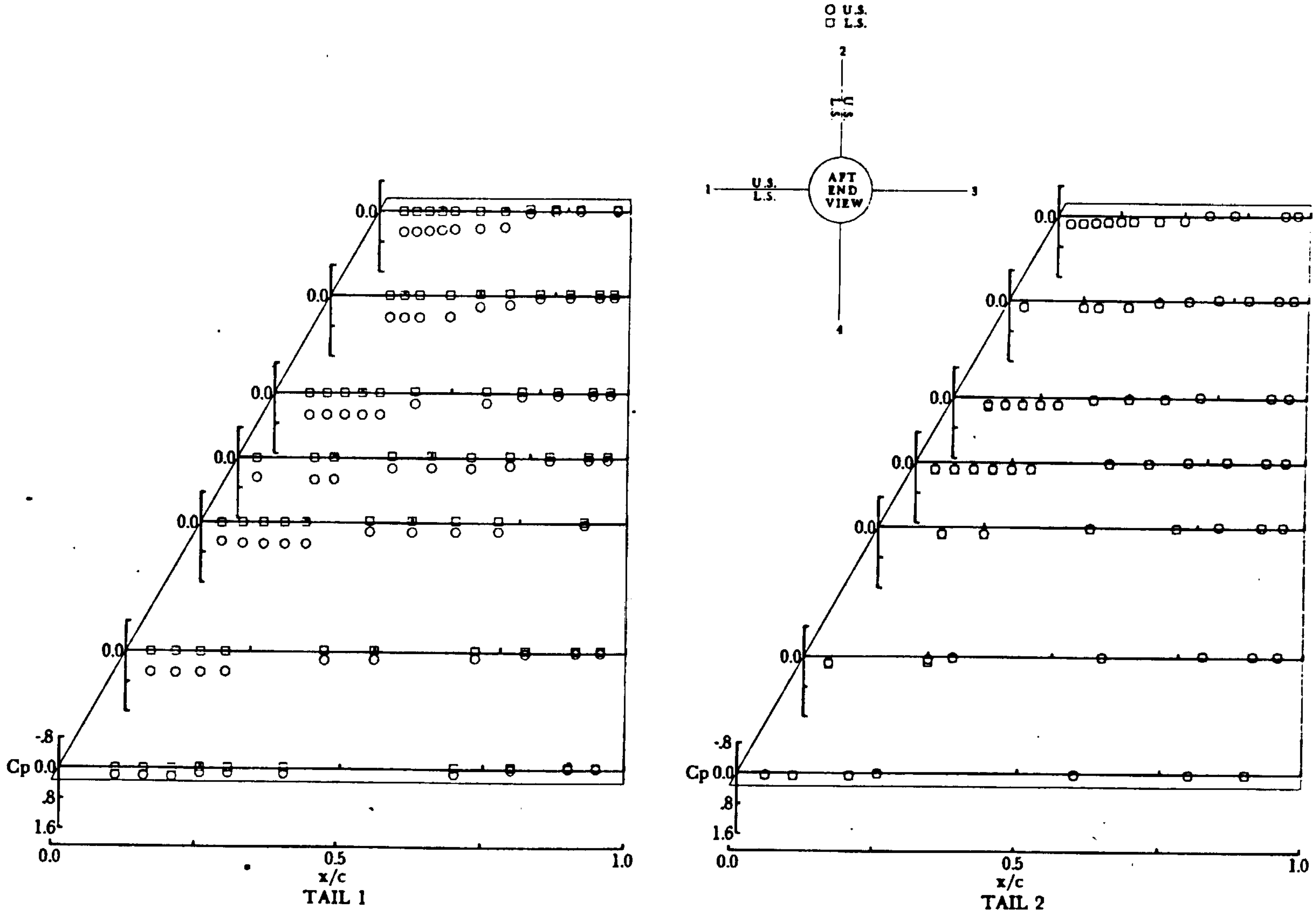

(a) $\alpha = -0.20^{\circ}$.

Figure 26.- Pressure coefficients for tail planform B at $M = 3.70$, $\phi = 90^{\circ}$, and $\delta_{1,3} = -15^{\circ}$.

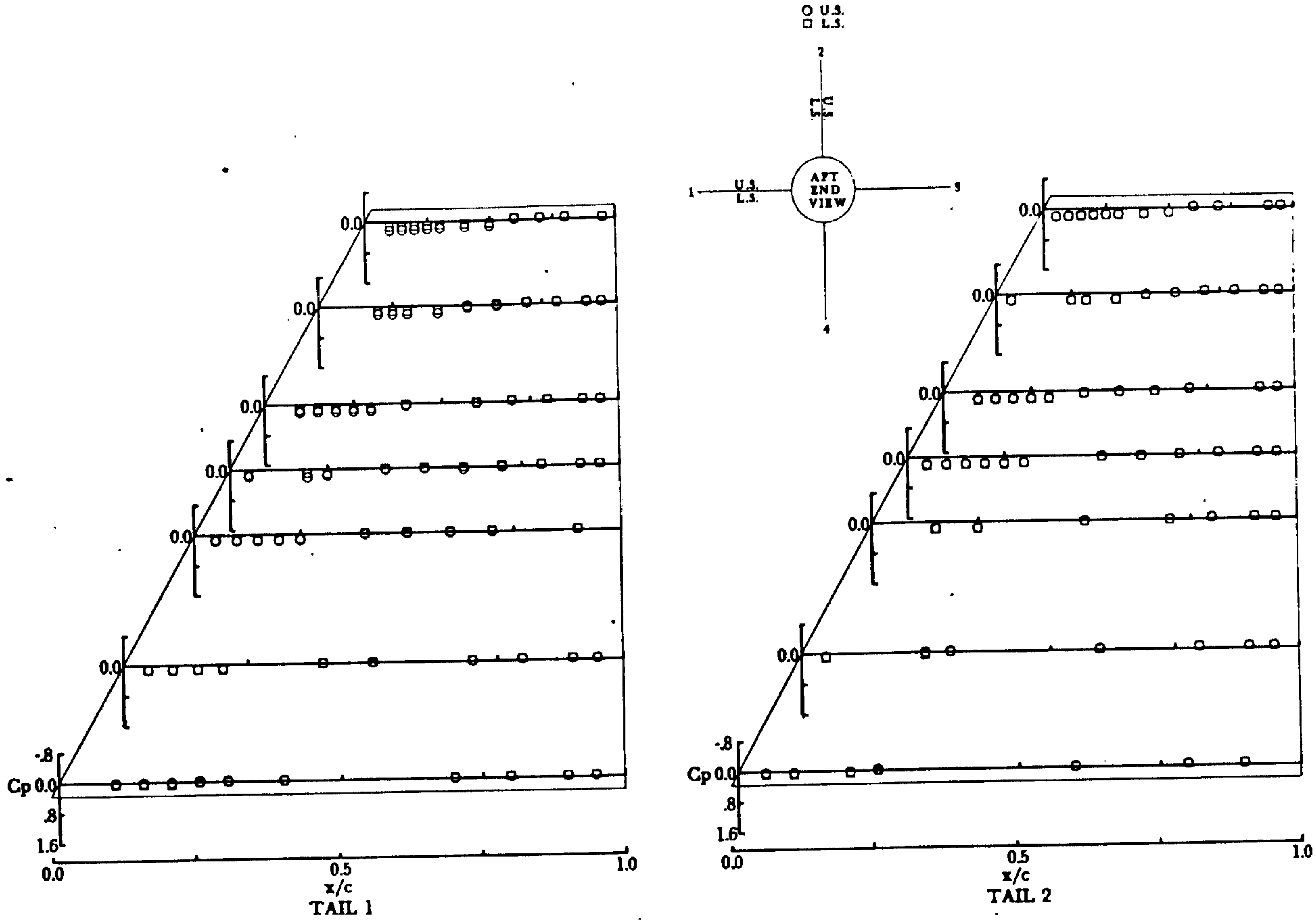

(b) α = 9.80°.

Figure 26.- Continued.

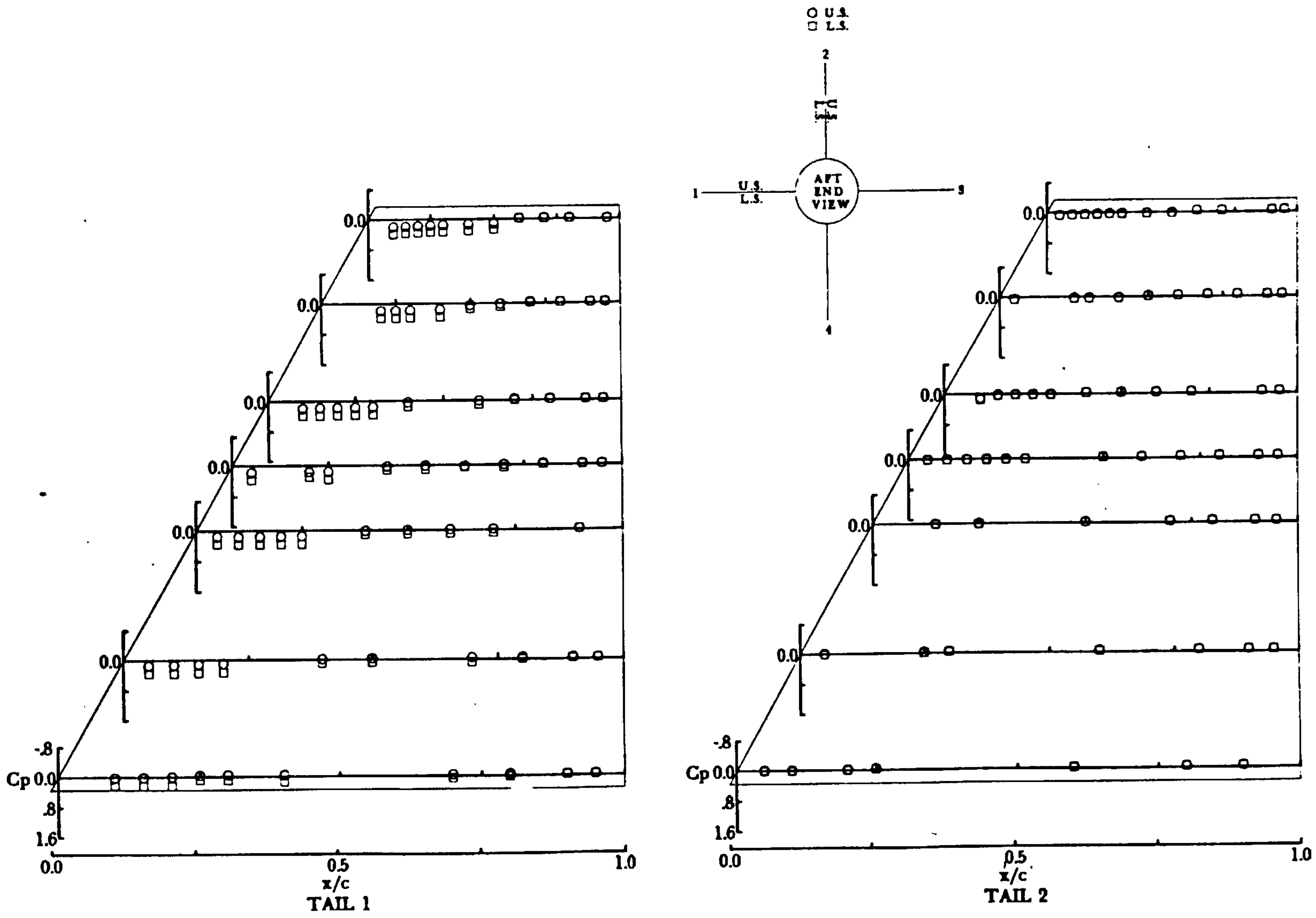

(c) α = 19.80°.

Figure 26.- Concluded.

*U.S. GOVERNMENT PRINTING OFFICE: 1979 - 635-004/12

NTIS does not permit return of items for credit or refund. A replacement will be provided if an error is made in filling your order, if the item was received in damaged condition, or if the item is defective.

Reproduced by NTIS
National Technical Information Service
U.S. Department of Commerce
Springfield, VA 22161

This report was printed specifically for your order from our collection of more than 2 million technical reports.

For economy and efficiency, NTIS does not maintain stock of its vast collection of technical reports. Rather, most documents are printed for each order. Your copy is the best possible reproduction available from our master archive. If you have any questions concerning this document or any order you placed with NTIS, please call our Customer Services Department at (703)487-4660.

Always think of NTIS when you want:
- Access to the technical, scientific, and engineering results generated by the ongoing multibillion dollar R&D program of the U.S. Government.
- R&D results from Japan, West Germany, Great Britain, and some 20 other countries, most of it reported in English.

NTIS also operates two centers that can provide you with valuable information:
- The Federal Computer Products Center - offers software and datafiles produced by Federal agencies.
- The Center for the Utilization of Federal Technology - gives you access to the best of Federal technologies and laboratory resources.

For more information about NTIS, send for our FREE *NTIS Products and Services Catalog* which describes how you can access this U.S. and foreign Government technology. Call (703)487-4650 or send this sheet to NTIS, U.S. Department of Commerce, Springfield, VA 22161. Ask for catalog, PR-827.

Name ______________________________
Address ____________________________
____
____
Telephone __________________________

- Your Source to U.S. and Foreign Government Research and Technology.