MANNED REMOTE WORK STATION DEVELOPMENT ARTICLE

NASA CR- 160466

FINAL REPORT — VOLUME III
DEVELOPMENT TEST PLAN
AND
APPENDIX A
MANUFACTURING REQUIREMENTS/SCHEDULE

(NASA-CR-160466) MANNED REMOTE WORK STATION DEVELOPMENT ARTICLE. VOLUME 3: DEVELOPMENT TEST PLAN. APPENDIX A: MANUFACTURING REQUIREMENTS/SCHEDULE Final Report (Grumman Aerospace Corp.) 180 p HC A09/MF A01
N80-17712
Unclas
G3/54 47124

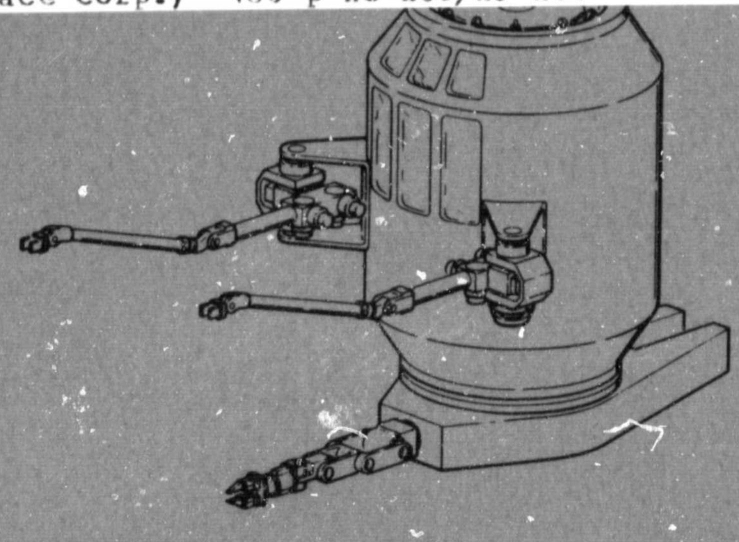

NAS9-15507
DRL T-1422
LINE ITEM 3
DRD MA-697T

GRUMMAN

MANNED REMOTE WORK STATION DEVELOPMENT ARTICLE

FINAL REPORT — VOLUME III
DEVELOPMENT TEST PLAN
AND
APPENDIX A
MANUFACTURING REQUIREMENTS/SCHEDULE

Prepared for
Lyndon B. Johnson Space Center
National Aeronautics and Space Administration
Houston, Texas 77058

By

Grumman Aerospace Corporation
Bethpage, New York 11714

Report NSS-MR-RP008

March 1, 1979

CONTENTS

PRECEDING PAGE BLANK NOT FILMED

CONTENTS (Cont)

ILLUSTRATIONS

PRECEDING PAGE BLANK NOT FILMED

ILLUSTRATIONS (contd)

ILLUSTRATIONS (contd)

TABLES

ACRONYMS

ABE	Arm Based Electronics
C&D	Controls and Displays
CCTV	Closed Circuit Television
DOF	Degrees-of-Freedom
DTA	Development Test Article
EVA	Extravehicular Activity
EMU	Extravehicular Mobility Unit
JSC	Johnson Space Center
LDEF	Long Duration Exposure Facility
MDF	Manipulator Development Facility
MMS	Multi-Mission Modular Spacecraft
MMU	Manned Maneuvering Unit
MRWS	Manned Remote Work Station
OCP	Open Cherry Picker
ORU	Orbital Replaceable Units
PHD	Payload Handling Device
RHC	Rotational Hand Controller
THC	Translational Hand Controller
RMS	Remote Manipulator System
RTP	Real-Time Peripheral
STS	Space Transportation System

Section 1

INTRODUCTION

This development test plan describes the tests and procedures for the Manned Remote Work Station (MRWS) Open Cherry Picker (OCP) Development Test Article (DTA) to validate systems requirements and performance specifications, and outlines a development test program to evaluate key design issues and man/machine interfaces when the MRWS OCP is used in a Shuttle support role of satellite servicing and in-orbit construction of large structures. These tests will be performed at Johnson Space Center (JSC) in their Manipulator Development Facility (MDF) Simulation Facility in Building 9A.

The Development Test Plan consists of two phases. The first phase is an integration and checkout phase which will verify that the DTA/MDF facility meets the established design performance requirements. The second phase of the plan outlines a test program for evaluating OCP subsystems and equipment design factors, man/machine interfaces, and task procedures when the OCP is utilized in the Shuttle role of servicing/maintenance of satellites such as the MMS, LANDSAT, ST, and LDEF; and in the role of supporting in orbit construction of large structures such as the 25 kW power module, LSSP, and SCAFE. The reader is referred to Volume I of the final report for a description of those mission-peculiar hardware.

The procedures describe the assembly, installation, and checkout procedures required for the DTA during the DTA and DTA/MDF integration and checkout phases. The DTA operations procedures encompass DTA operation and servicing. The operation procedures also provide theory of operation for familiarization of JSC personnel, and the servicing procedures will cover periodic calibration/maintenance.

Figure 1 shows the interrelationship between the Development Test Plan, Volume III, and the Development Test Article Program. The assembly, integration, and checkout procedures are used during the OCP assembly, integration, and checkout manufacturing phases at Grumman. After the OCP is delivered to JSC, the integration and checkout procedures are used to interface the DTA with the MDF and checkout DTA/MDF system operation. The integration and checkout procedures contain an acceptance test plan to verify the OCP DTA/MDF is ready for conduction of the simulation program. The simulation test plan outlines the various tests to be performed and contains step-by-step test procedures. The operation, maintenance/servicing, and safety procedures support the DTA simulation test program.

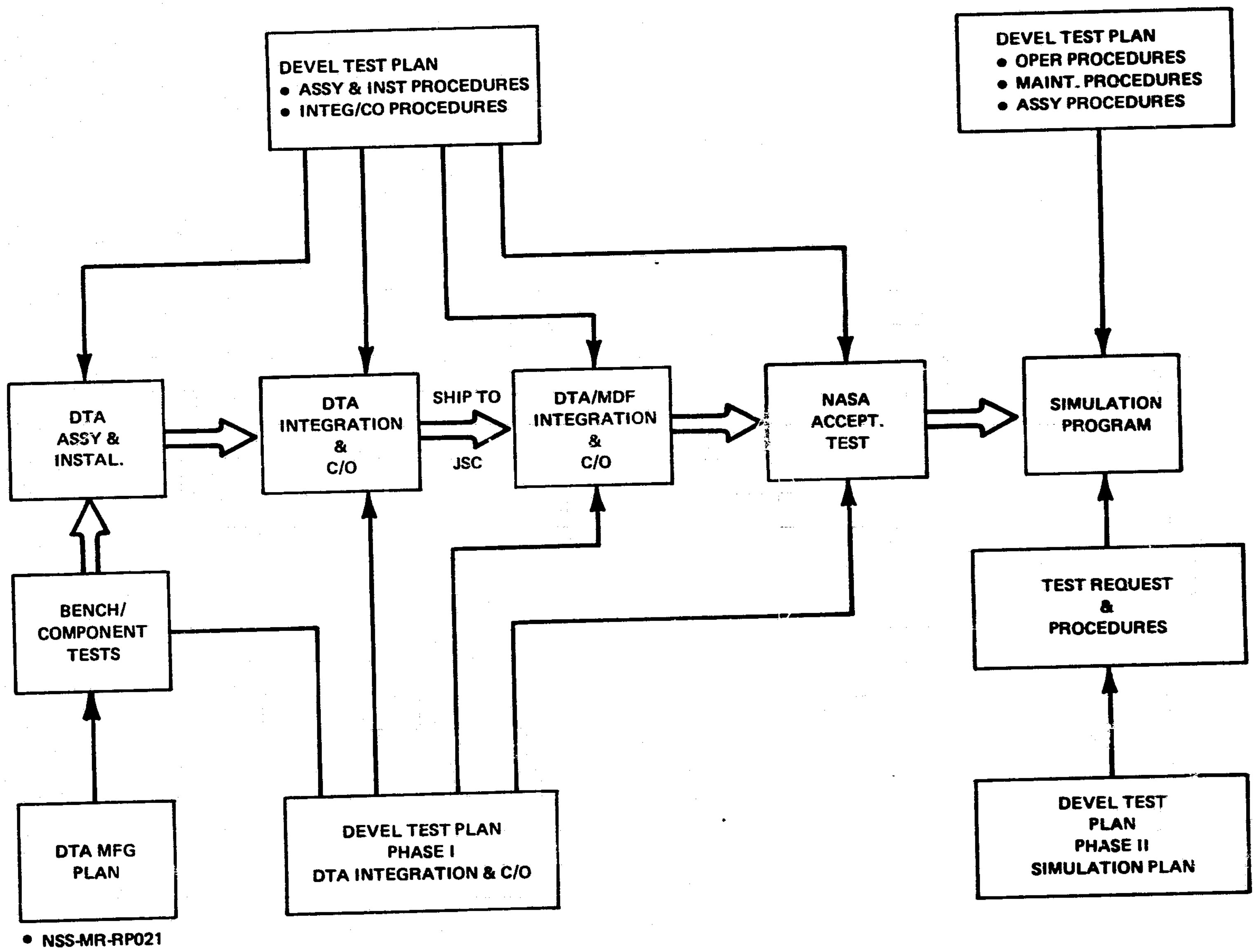

Figure 1. OCP Development Test Plan Flow

0081-001
III

Section 2

SIMULATION OBJECTIVES

There are four primary areas of OCP critical design issues that are to be addressed by simulation testing: the control system design; controls and displays (C&D) panel design; stabilizer design; and mechanical system design.

The primary objective of the MDF is to provide a simulated mission environment to evaluate the OCP conceptual design, develop new designs where necessary, develop mission flight procedures, and develop mission support equipment requirements.

A secondary objective will be to provide a facility for mission training and to assist in the qualification and verification testing for the OCP flight article.

Section 3

OCP-DTA DESCRIPTION

The OCP-DTA provides the following general features and capabilities:

- The ability to test OCP operations at the MDF for servicing satellites and constructing large space structures
- An interface structure for the MDF air bearing sled and Remote Manipulator System (RMS) grapple
- A controls and displays panel for control of the facility RMS and eventual control of an electromechanical manipulator mounted to the OCP-DTA
- A lighting system that can be used to test a wide range of lighting conditions
- Shuttle zero-g foot restraint system modified for operation in 1-g
- A controls and displays console that can be used to operate the RMS from the OCP and provide the capability to place the console in an off-line position
- A payload handling device(s) that can accommodate a wide range of payload size, shape, and mass
- A mechanical, manually operated stabilizer to evaluate OCP tiedown procedures that will consider the lack of backdrive capability in the MDF RMS system
- A tool storage area for test of storage arrangements
- A safety/rest restraint to support the operator and prevent loss of balance

- **Performance summary:**

- Man/machine interface	Limitations of 5 percentile female to 95 percentile male operator wearing an Extravehicular Mobility Unit (EMU)
- Work platform	Continuously rotatable, locked at 45° increments
- Operations	All manual operations: unfolding, locating C&D, lighting adjustment, payload handling, operator positioning, stabilizer operation, stowage
- Stabilizer	Reach around outside corner, 22.4 N tip load, 175 N/cm stiffness
- End effector	Jaw travel 0-12 cm, force variable 0-890 N
- Structure strength	Console withstand 1.4-g sudden stop with operator weight 170 kg
- Illumination	50 ft-c on work area
- Weight	227 kg maximum

- The OCP-DTA is required to interface with the existing SEL 32-35 computer system. All electrical interfaces are made at a junction strip located on the OCP-DTA. All wire runs, all air hoses, a facility communications box, and a computer/facility safing system are provided GFE.

3.1 STRUCTURAL MECHANICAL FEATURES

Figure 2 presents a layout of the OCP-DTA configuration that is to be fabricated and tested. It features eight major elements: (1) base assembly, (2) foot restraint assembly, (3) the C&D console assembly, (4) the light stanchion, (5) the tool bin, (6) the payload handling device, (7) the stabilizer, and (8) safety/rest restraint.

3.1.1 Base Module

The base module is sized to interface with the stabilizer, console assembly, payload handling device, MDF air bearing sled, and MDF manipulator arm end effector grapple fitting. The base module basic structure, which has a cross section of 8 x 8 in. consists of brake formed aluminum plates riveted together to form a closed box section. Intermediate internal bulkheads are added to stiffen the box structure. The various interface brackets and fittings are fastened to the base module.

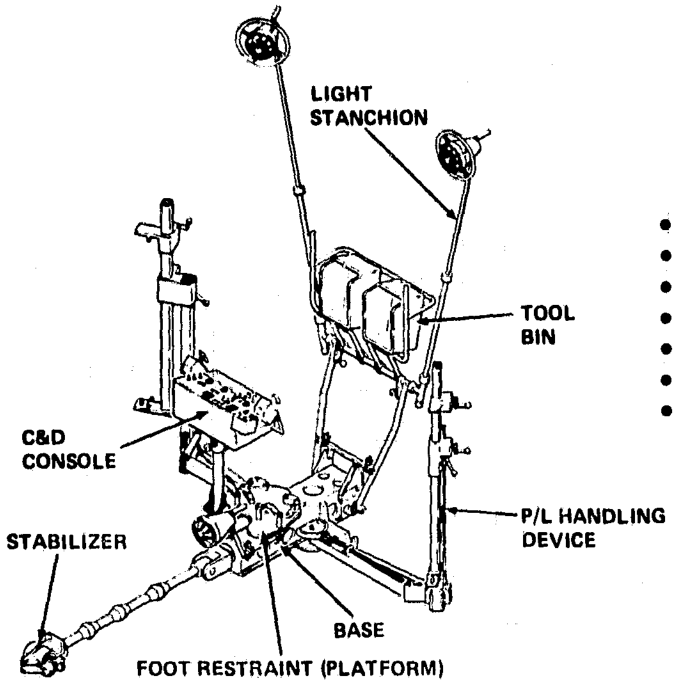

	WEIGHT, Kg (LB)	
• BASE MODULE	11.3	(25.0)
• PLATFORM	12.7	(28.0)
• C&D CONSOLE	36.3	(80.0)
• LIGHT STANCHION	25.0	(55.0)
• P/L HANDLING DEVICE (2)	54.4	(120.0)
• TOOL BIN	17.7	(39.0)
• STABILIZER	22.6	(50.0)
TOTAL	180.0	(397.0)

Figure 2. OCP Configuration and Weight

3.1.2 Foot Restraint Assembly

The standard Shuttle foot restraint system is used to provide proper restraint for simulated extravehicular activity (EVA) operations. The restraint system consists of a flat plate with a pair of toe bars and a set of heel restraints rigidly mounted to a plate (Figure 3). A boot-to-restraint interface is also provided on the space suit assembly. Both the foot restraint fixture and the boot interface are passive elements with restraint provided by pivoting the boot into the heel fitting.

The shuttle foot restraint is designed for operation in a zero-g environment with a rotating mechanism that was considered unsatisfactory for the 1-g test environment. For this reason, a lazy susan roller system capable of handling the 1-g loads in an easily rotatable platform arrangement was substituted for the shuttle platform design (Figure 4). The platform-mounted foot restraint fittings (heel and toe) which interface with the EMU boot house a platform latch system actuated by a lanyard that provides a latch position every 45° for the entire 360° of platform rotation and can be operated independently of the position or rotation of the C&D console support.

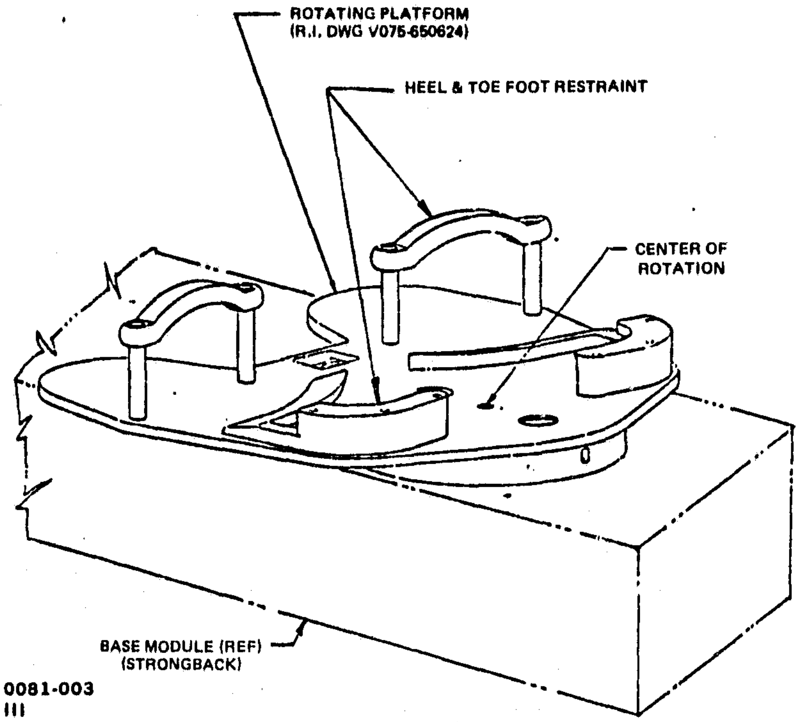

Figure 3. Rotatable Foot Restraint Platform

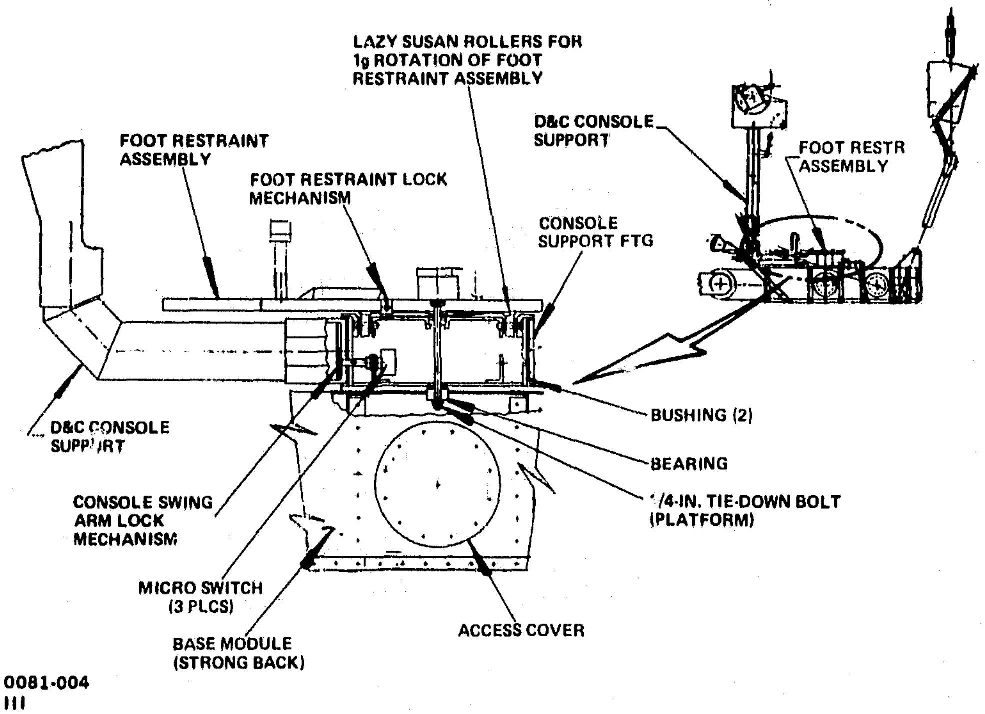

Figure 4. DTA Foot Restraint and C&D Console Attachment to Base Module

3.1.3 C&D Pedestal Assembly

The C&D console support is mounted around the same shaft that supports the foot restraint platform and has five latched positions from forward to aft. Three console operating positions are provided (forward, side, and aft) and at each of these positions the lock mechanism activates a microswitch that inputs to the facility computer to change the control axis to match the C&D console position. The foot restraint platform and the C&D console are attached to the base module (strongback) by one 1/4 in. diameter bolt that is accessible through an access cover in the side of the strongback.

The C&D console also features a manually actuate release mechanism for moving the C&D panel to one of three positions. The off-line position provides unobstructed movement of the suited crewman when performing work tasks. The console can be adjusted vertically 8-1/2 in. to accommodate different size operators.

3.1.4 Light Stanchion Assembly

The light stanchion assembly (Figure 5) is configured to test a wide range of lighting conditions. It is anticipated that simulation results will dictate a single preferred location for the overhead lights or determine the need for an electrically driven adjustment system. The DTA light adjustment system, not configured for EVA operatives, is adjusted in the port/starboard direction with a telescoping tube and locked with a knurled knob expansion sleeve. This pivot is also used to readjust the light stanchion in pitch to two positions that are locked with a pip pin. The stanchions are adjusted in height to a maximum of 8 ft above the base assemble by a telescoping tube arrangement that are locked by two expansion sleeves on each pole.

3.1.5 Tool Bin Assembly

A storage location for tools is provided on the light stanchion at the aft end of the vehicle. Two tool boxes, each 9.5 in. x 9.9 in. x 13.5 in. provide a total volume of 1.25 ft^3 (Figure 6). One tool box can be arranged to test Skylab-type pullout drawers and is capable of holding small tools typically required for general work. The other box is shown holding a medium-sized tool which may or may not be mission peculiar. In the event of a mission requiring a significant number of mission-peculiar medium size tools, a special tool box can be designed for that mission and readily installed to replace the present box shown.

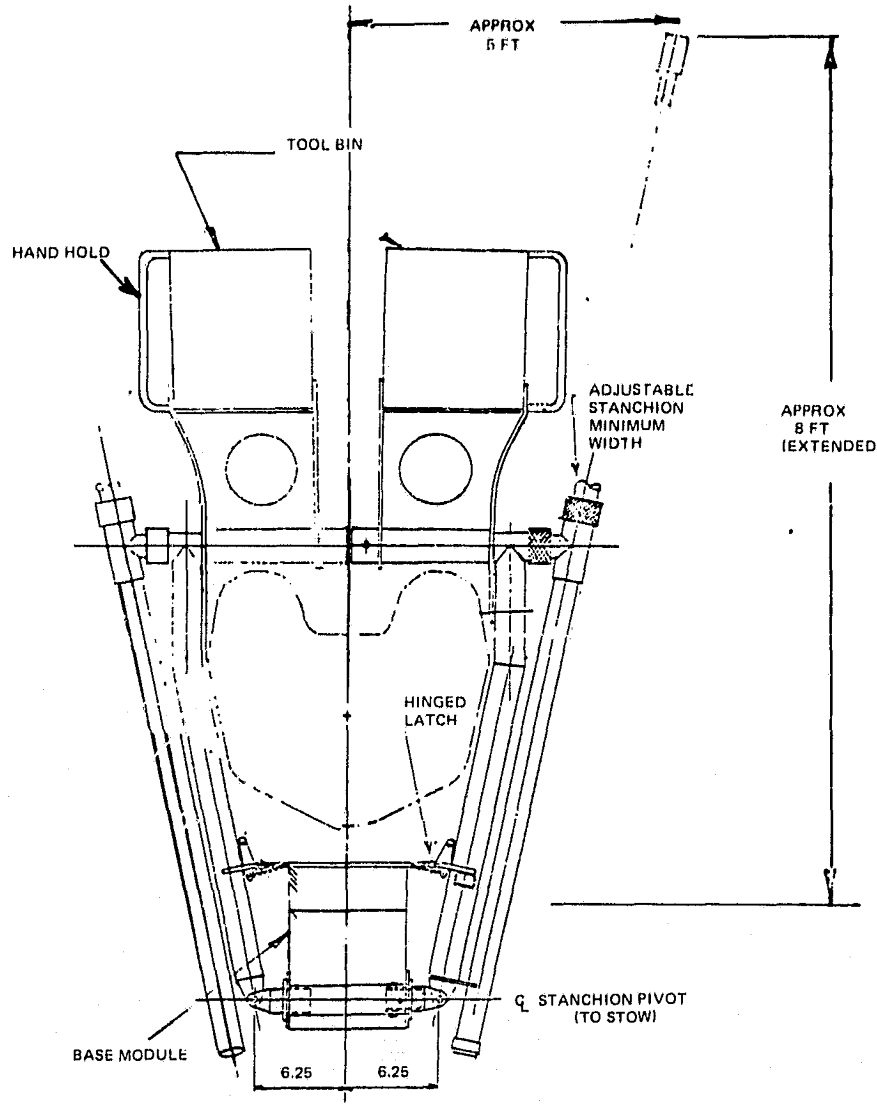

0081-005
111

Figure 5. Flood Light Stanchion

3.1.6 Operator Safety/Rest Restraint Concept

Operation of the DTA at velocities up to 2 ft/sec with the EMU suited operator engaged in the heel and toe foot restraints, it is possible that the operator may be injured in the event of a sudden uncontrolled stop. To protect the operator and help reduce his fatigue during test sessions in a 1-g environment an overhead support concept is presently considered most desirable. This system (Figure 7) utilizes an inertia reel lock which will provide support of the operator in the event of a sudden stop and by spring loading will reduce the EMU suit weight that the operator will be

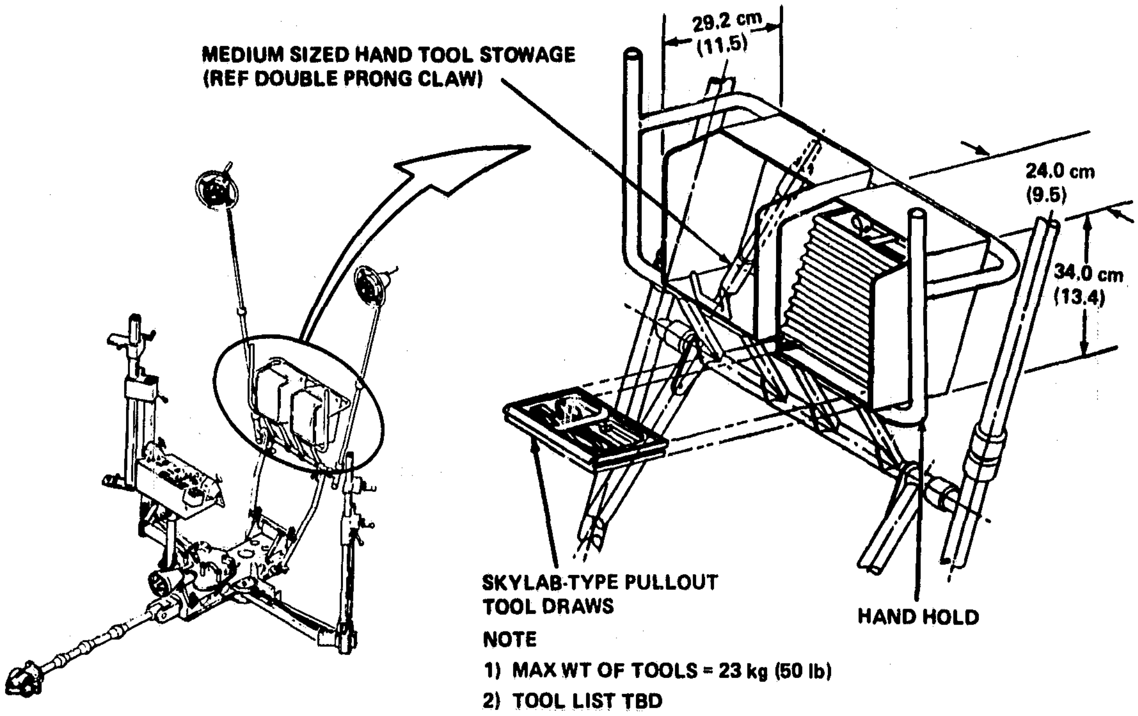

Figure 6. DTA Tool Bin Stowage Arrangement

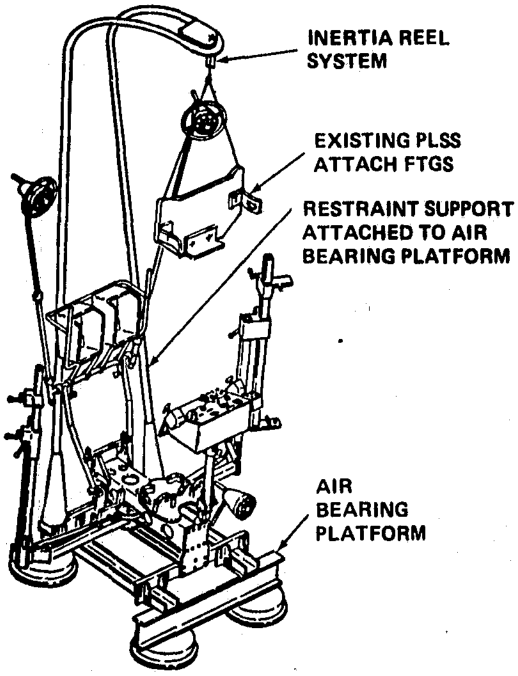

ADVANTAGES

- DOES NOT RESTRICT OPERATOR IN PERFORMING WORK TASKS
- NO MODIFICATION OF DTA REQ'D
- COULD POSSIBLY BE UTILIZED FOR A PETER PAN RIG

DISADVANTAGES

- COMPLEX SUPPORT MECHANISMS (INERTIA REEL)
- REQUIRES OVERHEAD SUPPORT STRUCTURE

Figure 7. Operator Safety/Rest Restraint Concept

required to support while standing in the foot restraints. The overhead structure has the added advantage of not restricting operator reach and motions in the performance of work tasks and has further potential as a Peter Pan rig to simulate a zero-g environment.

3.1.7 Deployment

Seven steps are required to manually fold the development test article. Figure 8 illustrations indicate the folding sequence of the OCP from the fully deployed position to the fully folded configuration. The operator starts the folding sequence while still standing on the foot restraint platform in the following manner:

1. Operator raises the stabilizer to its stowed position over the C&D console
2. Operator lowers the lights on the telescoping tubes to their minimum height, rotates them to line up with the lower support frame, and then telescopes them into their minimum width
3. Operator lowers tool boxes from their upright positions to the off-line positions

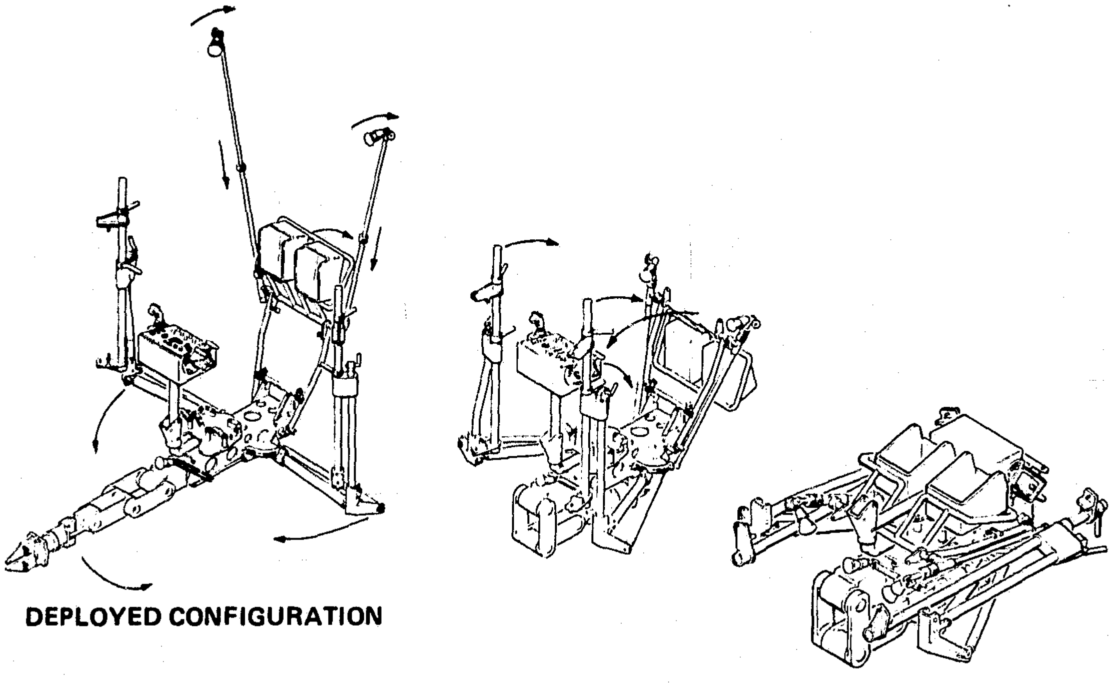

0081-008
III

Figure 8. OCP Folding Sequence

4. Operator rotates payload landing device to forward position and then folds them down to their stowed position.

5. Operator now rotates foot restraint platform to forward position and detaches himself from the OCP

6. The light support frame is now lowered forward to its stowed position over the foot restraint platform

7. The C&D console is now unlocked, folded aft, and latched in its stowed position, trapping the light stanchion support frame and the tool boxes.

Figure 9 shows a mockup of the OCP in the folded configuration and Figure 10 shows the mockup in the fully deployed configuration.

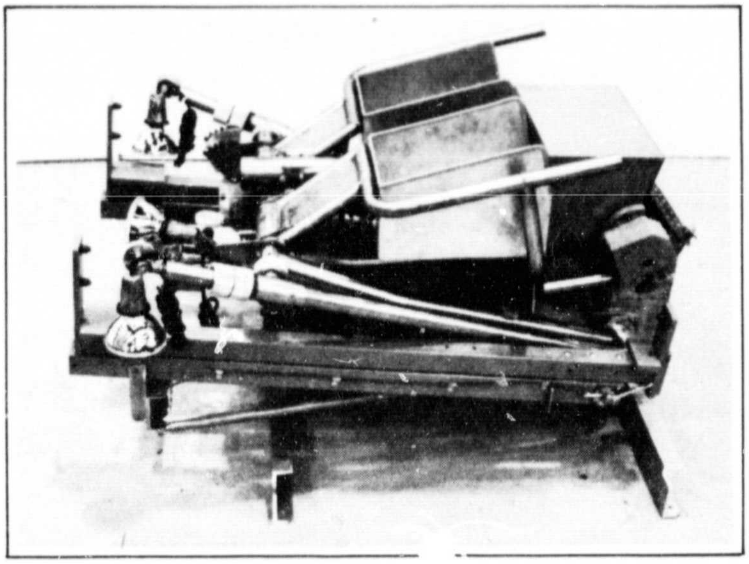

0081-009
III

Figure 9. Folded DTA Mockup

3.1.8 Payload Handling Device

An important feature of the OCP is to assist the EVA crewman in handling large bulky payloads and mission-peculiar tools. Two payload handling devices are provided on the OCP, one to handle a replacement unit while a second is used to hold the unit replaced. Flexibility has been incorporated into the payload handling device to permit compatibility with a large range of undefined payloads in the shapes and sizes shown in Figure 11.

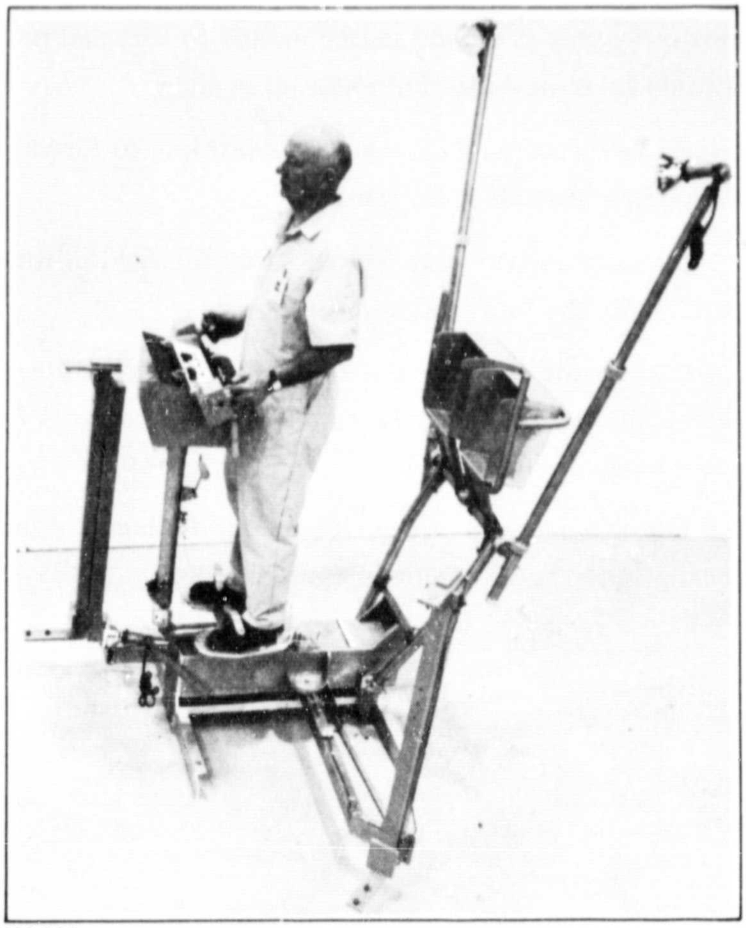

0081-010
III

Figure 10. Deployed DTA Mockup

A perspective of the left hand installation of the payload handling device is depicted in Figure 11, with appropriate identification of the major components discussed below:

- Payload Interfaces - Two payload interfaces are shown to accommodate rectangular shapes such as the Multi-Mission Modular Spacecraft (MMS) subsystem module. The lower interface is fixed to a pedestal; the upper interface is vertically adjustable and lockable on the pedestal by the astronaut, thus permitting the attachment of various height payloads
- Pedestal - A pedestal, which can be vertically adjusted and locked to the support stanchion by the astronaut, is provided to support the payload. This allows the astronaut to adjust the vertical position of the interfaces for optimum alignment and translations clearances for the payload

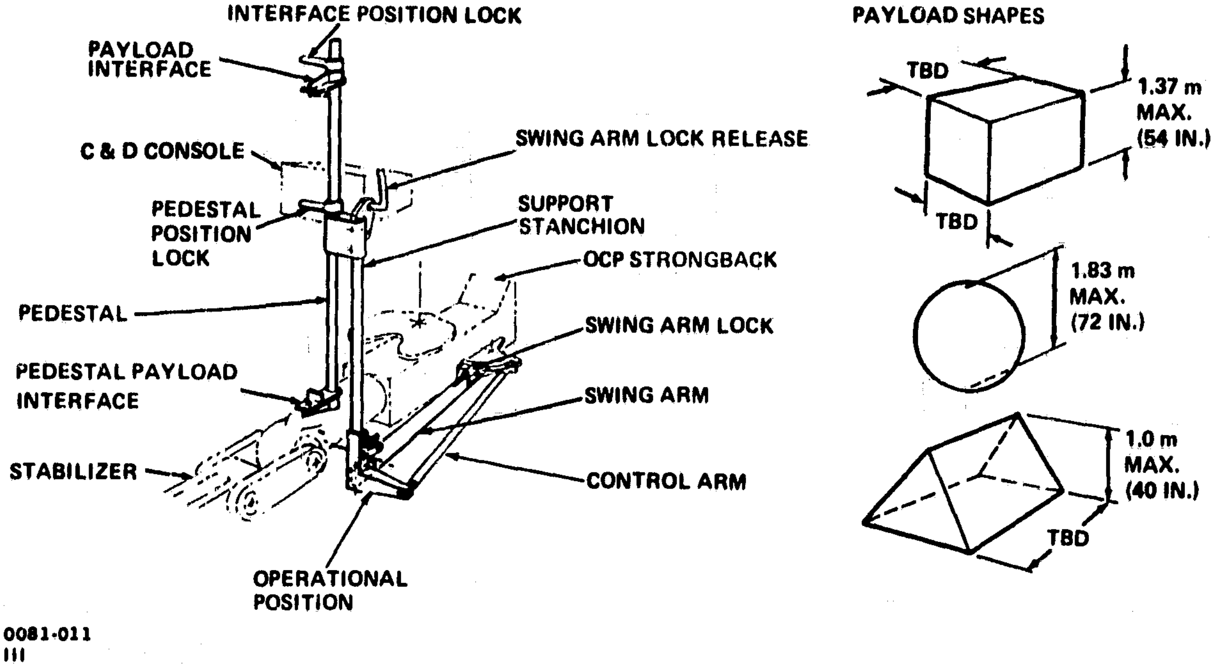

Figure 11. Payload Handling Device

- Support Stanchion - A support stanchion is provided to support the pedestal, interface with the swing arm, and provide for the optimum location of a swing arm release
- Swing Arm/Control Arm - A swing arm is provided to support the payload and swing it to an off-line position (payload stow position). The control arm makes up the four-bar linkage arrangement to provide the required payload swing clearances
- Swing Arm Lock - A swing arm lock system is provided to lock the swing arm at three specific positions: operational for payload pickup, stow for PHD stowage, and off-line for payload stowage or payload replacement unit. Any number of intermediate positions may be obtained.

Figure 12 shows how the payload handling device can also be used to stow large mission peculiar tools.

3.1.9 Stabilizer

Another feature of the OCP is the stabilizer, the purpose of which is to grapple the work-site or a part of the Shuttle payload bay to rigidize the OCP work

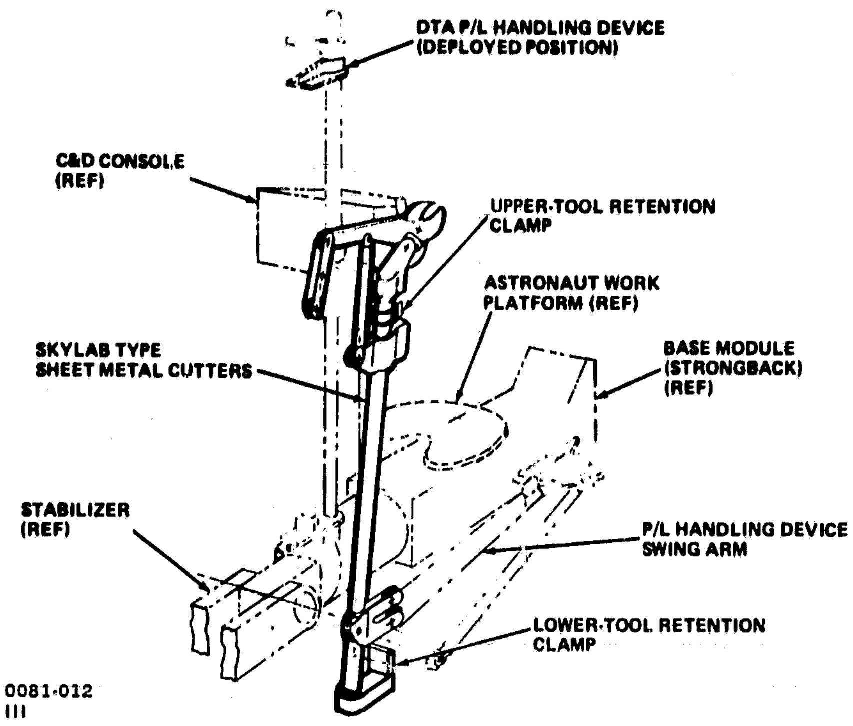

Figure 12. Large Mission-Peculiar Tool Stowage

station by reducing loads on the Shuttle RMS. The options considered for this role are summarized in Figure 13, ranging from a simple mechanical device to a new design electromechanical device. At this time, the all-mechanical approach will be emphasized to determine through simulation if the potentially low cost approach is acceptable.

3.2 ELECTRICAL SYSTEM FEATURES

3.2.1 Controls and Displays

The various controls and displays necessary to operate the OCP-DTA are located on the controls and display console. Because the selection of controls and displays are one of the critical design issues to be solved during the simulation test program, a modular approach was used in the layout of the panel. All the switches, indicators, and annunciation for the selection of the mode of control and operation of the MDF-RMS are located in one section of the panel (Figure 14). The lighting section of the panel contains the switches for varying the intensity of the panel illumination, annunciator, indicator, and external flood lights. A utility power switch and receptacle is provided on the panel. A section of the panel is left blank (approximately 45 sq in.) so that during the simulation program any controls or displays can be added at a later date.

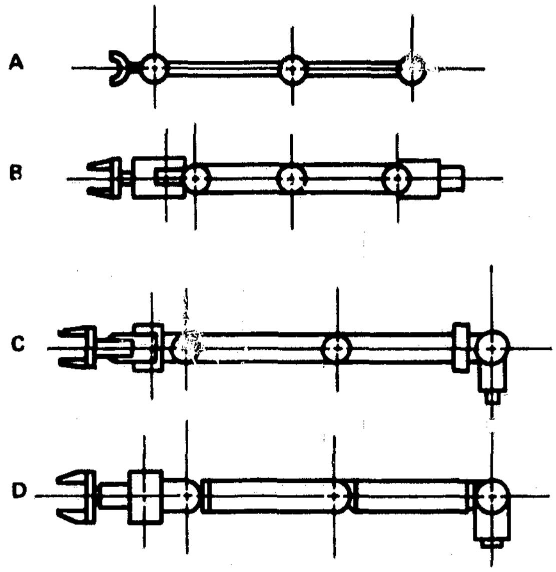

MECHANICAL SERPENTINE
- SIMPLE
- INEXPENSIVE

OFF-SHELF ELECTROMECHANICAL (PAR 3000)
- HEAVY – BULKY
- INEXPENSIVE
- EXTENSIVE MODIFICATIONS REQ

OFF-SHELF ELECTROMECHANICAL (P-FMA)
- AVAILABLE AT MSFC
- ADEQUATE FOR DTA TESTING

NEW DESIGN ELECTROMECHANICAL
- MAY BE EXPENSIVE
- NEED FOR EM DEVICE NOT SUFFICIENTLY PROVEN TO JUSTIFY NEW DEVICE AT THIS TIME

0081-013
III

Figure 13. Stabilizer Options

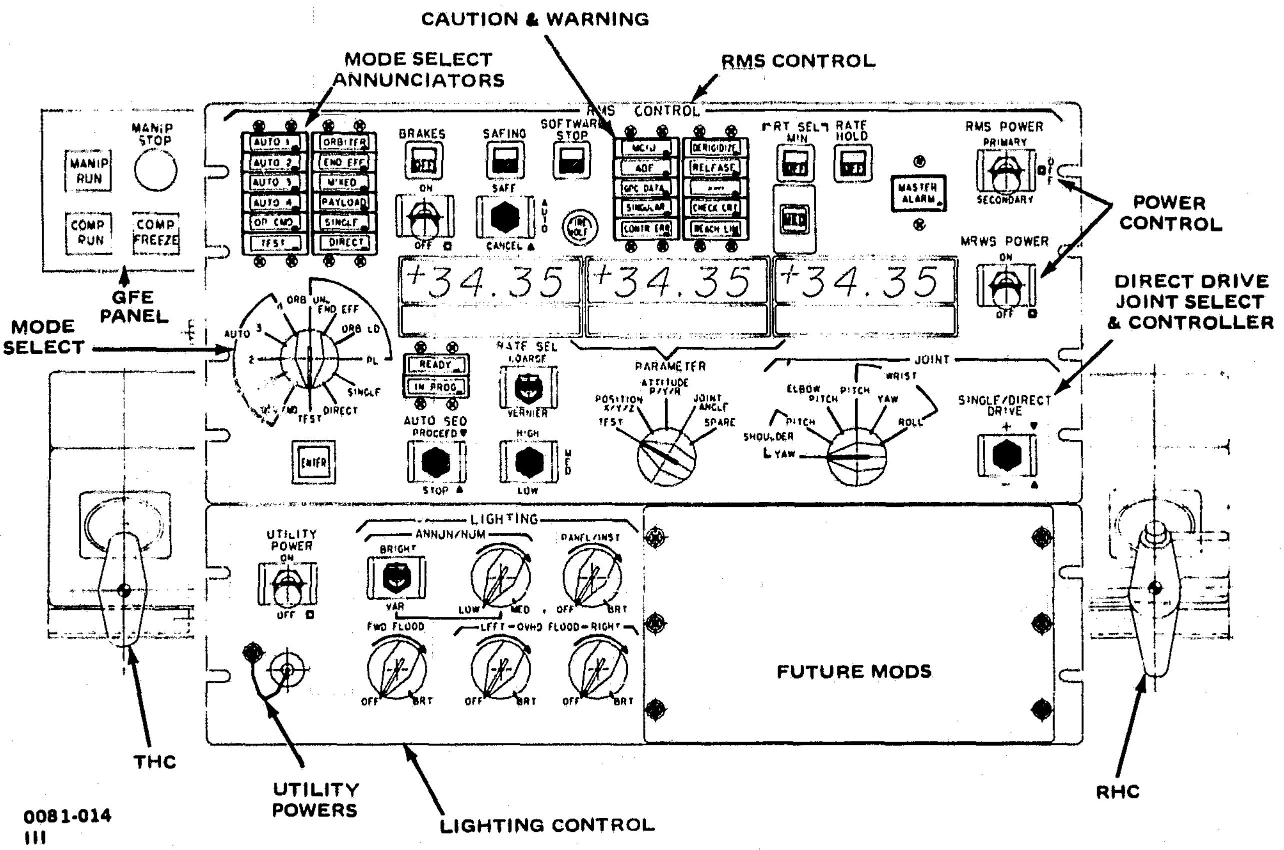

0081-014
III

Figure 14. Control and Display Panel

The 3-degree-of-freedom (DOF) rotational and translational hand controllers for MDF-RMS manual augmented control are located external to the panel. This allows a quick change during the simulation program to evaluate individual switch control of the MDF-RMS. A GFE subpanel mounted on the side of the console contains the headset plug for the OCP-DTA intercom system and mode controls for the MDF computer.

The control and display components that are to be delivered are listed in Figures 15 and 16. Components are unqualified versions of Shuttle hardware where they are available and others are standard commercial components with the same functional capability as the Shuttle component. Component functions are listed in Table 1.

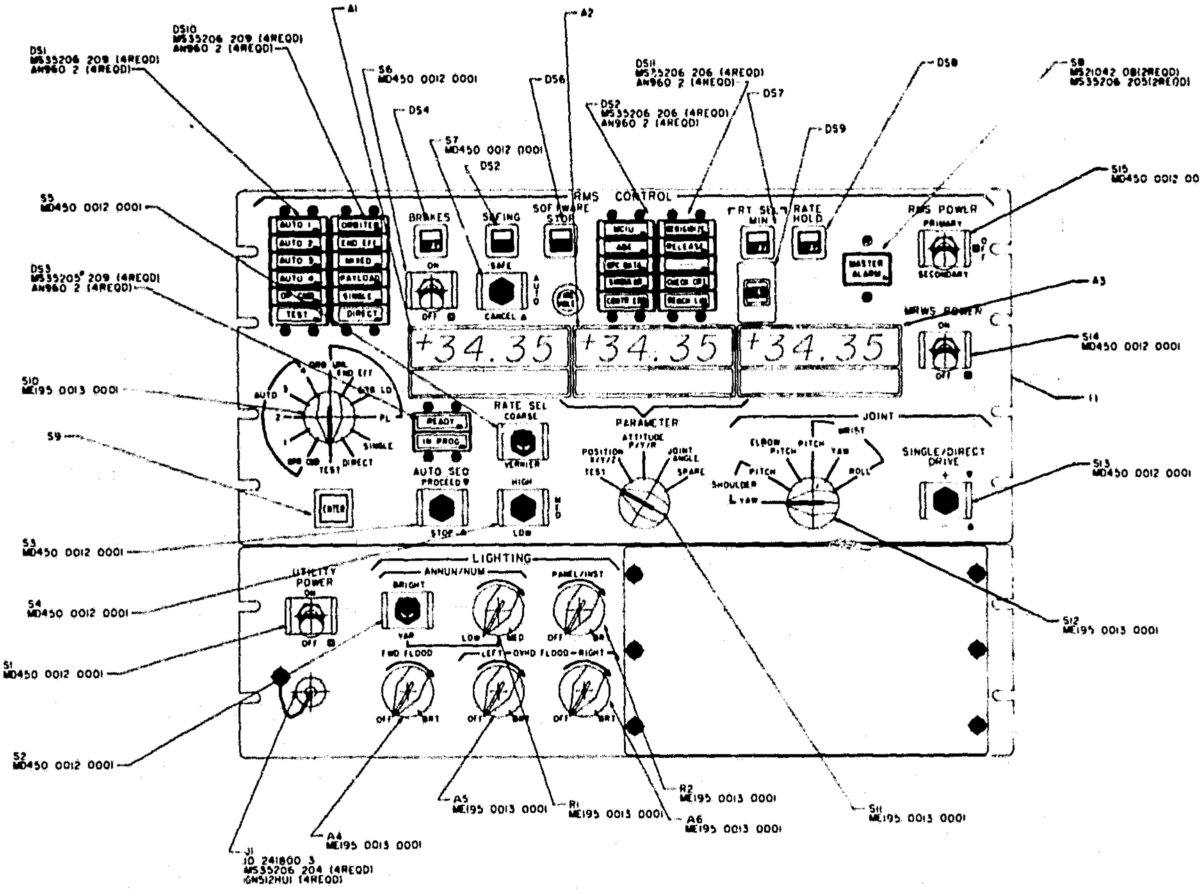

0081-015
III

Figure 15. Control and Display Panel Layout

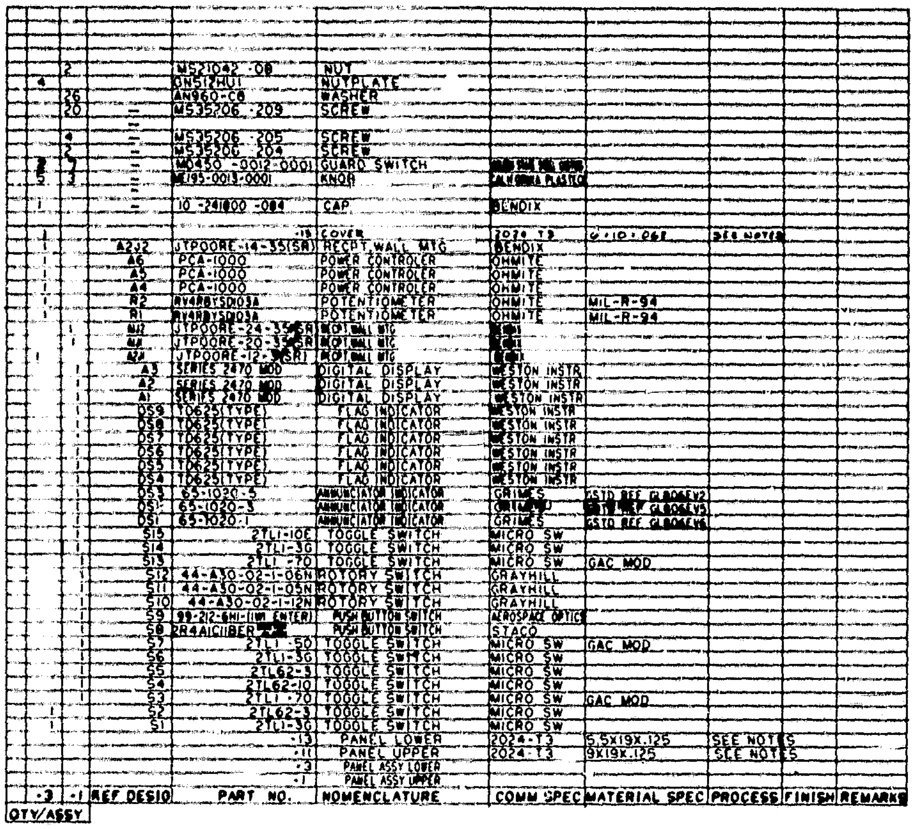

QTY/ASSY										
	-3	-1	REF DESIG	PART NO.	NOMENCLATURE	COMM SPEC	MATERIAL SPEC	PROCESS	FINISH	REMARKS
		2		MS21042 -08	NUT					
	4			DN512HU1	NUTPLATE					
		26		AN960-C8	WASHER					
		20	—	MS35206 -209	SCREW					
		4	—	MS35206 -205	SCREW					
		2	—	MS35206 -204	SCREW					
	2	7	—	MD450 -0012-0001	GUARD SWITCH	[illegible]				
	5	3	—	ME195-0013-0001	KNOB	CALIFORNIA PLASTIC				
	1		—	10 -241800 -084	CAP	BENDIX				
	1			-15	COVER	2024 T3	G-10-062	SEE NOTES		
	1		A2J2	JTPOORE-14-35(SR)	RECPT.WALL MTG	BENDIX				
	1		A6	PCA-1000	POWER CONTROLER	OHMITE				
	1		A5	PCA-1000	POWER CONTROLER	OHMITE				
	1		A4	PCA-1000	POWER CONTROLER	OHMITE				
	1		R2	RV4RBYSD103A	POTENTIOMETER	OHMITE	MIL-R-94			
	1		R1	RV4RBYSD103A	POTENTIOMETER	OHMITE	MIL-R-94			
		1	A1J2	JTPOORE-24-35(SR)	RECPT WALL MTG	BENDIX				
		1	A1J1	JTPOORE-20-35(SR)	RECPT WALL MTG	BENDIX				
	1		A2J1	JTPOORE-12-35(SR)	RECPT WALL MTG	BENDIX				
		1	A3	SERIES 2470 MOD	DIGITAL DISPLAY	WESTON INSTR				
		1	A2	SERIES 2470 MOD	DIGITAL DISPLAY	WESTON INSTR				
		1	A1	SERIES 2470 MOD	DIGITAL DISPLAY	WESTON INSTR				
		1	DS9	TO625(TYPE)	FLAG INDICATOR	WESTON INSTR				
		1	DS8	TO625(TYPE)	FLAG INDICATOR	WESTON INSTR				
		1	DS7	TO625(TYPE)	FLAG INDICATOR	WESTON INSTR				
		1	DS6	TO625(TYPE)	FLAG INDICATOR	WESTON INSTR				
		1	DS5	TO625(TYPE)	FLAG INDICATOR	WESTON INSTR				
		1	DS4	TO625(TYPE)	FLAG INDICATOR	WESTON INSTR				
		1	DS3	65-1020-5	ANNUNCIATOR INDICATOR	GRIMES	GSTD REF GL80SEV2			
		1	DS2	65-1020-3	ANNUNCIATOR INDICATOR	GRIMES	GSTD REF GL80SEV5			
		1	DS1	65-1020-1	ANNUNCIATOR INDICATOR	GRIMES	GSTD REF GL80SEV6			
		1	S15	2TL1-10E	TOGGLE SWITCH	MICRO SW				
		1	S14	2TL1-3G	TOGGLE SWITCH	MICRO SW				
		1	S13	2TL1 -70	TOGGLE SWITCH	MICRO SW	GAC MOD			
		1	S12	44-A30-02-1-06N	ROTORY SWITCH	GRAYHILL				
		1	S11	44-A30-02-1-05N	ROTORY SWITCH	GRAYHILL				
		1	S10	44-A30-02-1-12N	ROTORY SWITCH	GRAYHILL				
		1	S9	99-212-6HI-(IW ENTER)	PUSH BUTTON SWITCH	AEROSPACE OPTICS				
		1	S8	2R4AICIIBER	PUSH BUTTON SWITCH	STACO				
		1	S7	2TL1 -50	TOGGLE SWITCH	MICRO SW	GAC MOD			
		1	S6	2TL1-3G	TOGGLE SWITCH	MICRO SW				
		1	S5	2TL62-3	TOGGLE SWITCH	MICRO SW				
		1	S4	2TL62-10	TOGGLE SWITCH	MICRO SW				
		1	S3	2TL1 -70	TOGGLE SWITCH	MICRO SW	GAC MOD			
	1		S2	2TL62-3	TOGGLE SWITCH	MICRO SW				
	1		S1	2TL1-3G	TOGGLE SWITCH	MICRO SW				
				-13	PANEL LOWER	2024-T3	5.5X19X.125	SEE NOTES		
				-11	PANEL UPPER	2024-T3	9X19X.125	SEE NOTES		
				-3	PANEL ASSY LOWER					
				-1	PANEL ASSY UPPER					

0081-016
III

Figure 16. Control and Display Panel Parts List

Grumman is to provide two fly leafs containing three lever-type switches on each for control of the RMS. A set of GFE hand controllers can be substituted for the switch boxes (Figure 17).

3.2.2 Wiring

The wire routing is shown in Figure 18. Two counter helically twisted bundles, each containing 100, 24 AWG wires and a GFE mode control cable, are routed from the C&D panel down the console pedestal. Electrical connectors are provided at the panel base so the wire bundles can be disconnected when the console is removed from the pedestal. The bundles are routed across the pedestal and platform pivot points by means of a flexible coil, to the rear of the base module structure to connectors located on the rear of the base module structure. The light stanchion wires are routed through the inside of the light stanchion tubes to the rear of the base module structure.

TABLE 1

CONTROL AND DISPLAY COMPONENT FUNCTIONS (SHEET 1 OF 8)

FUNCTION	ELEMENT	REF FIG. 15
CONTROL FUNCTIONS	• <u>Mode Select Switch</u> A 12-position rotary switch is provided to enable the operator to select the RMS Control Mode that he chooses to enter. The rotary switch is labelled MODE on the panel. All selected modes must be entered using the Enter switch before being accepted by the computer. Direct drive mode does not need to be entered by the Enter switch.	S-10
	– Mode Switch <u>TEST</u> – Selects the RMS Test Mode as the next mode to be entered into the computer. Because On-Orbit Test Mode does not exist, software configuration is idle in this mode	
	– Mode Switch <u>OPR CMD</u> – Selects the Operator Commanded Auto Sequence Mode as the next mode to be entered into the computer. The input data for this mode is entered and checked at the Orbiter CRT display and the Keyboard	
	– Mode Switch <u>AUTO 1</u> – Selects Pre-stored Auto Sequence Assignment No. 1 as the next mode to be entered into the computer	
	– Mode Switch <u>AUTO 2</u> – Selects Pre-stored Auto Sequence Assignment No. 2 as the next mode to be entered into the computer	
	– Mode Switch <u>AUTO 3</u> – Selects Pre-stored Auto Sequence Assignment No. 3 as the next mode to be entered into the computer	
	– Mode Switch <u>AUTO 4</u> – Selects Pre-stored Auto Sequence Assignment No. 4 as the next mode to be entered into the computer	
	– Mode Switch <u>ORB</u> – Selects Manual Augmented Mode as the next mode to be entered into the computer. Control action is referred to the Orbiter Referenced Coordinate System	
	– Mode Switch <u>END EFF</u> – Selects Manual Augmented Mode as the next mode to be entered into the computer. Control action is referred to the End Effector Referenced Coordinate System	
	– Mode Switch <u>MIX</u> – Selects Manual Augmented Mode as the next mode to be entered into the computer. Control action is referred to the Split Payload/Orbiter Coordinate Systems	
	– Mode Switch <u>PL</u> – Selects Manual Augmented Mode as the next mode to be entered into the computer. Control action is referred to the Payload Referenced Coordinate System	
	– Mode Switch <u>SINGLE</u> – Selects Single Mode as the next mode to be entered into the computer. Once this mode has been entered into the computer joint selection is made using the <u>JOINT SELECT</u> rotary switch. It is possible to change the joint selection any number of times without re-entering the <u>SINGLE</u> mode. Drive direction of the selected joint is controlled by the <u>SINGLE/DIRECT DRIVE</u>, two-position momentary switch.	

TABLE 1

CONTROL AND DISPLAY COMPONENT FUNCTIONS (SHEET 2 OF 8)

FUNCTION	ELEMENT	REF FIG. 15
CONTROL FUNCTIONS (contd)	– Mode Switch DIRECT – Selects the DIRECT MODE. The DIRECT selection command is functionally accepted by the hardware only when brakes ON has been commanded. In this mode joints are driven individually, the required joint being selected using the JOINT SELECT rotary switch. It is possible to change the joint selection any number of times while in the DIRECT MODE. Actuation of the SINGLE/DIRECT DRIVE two position momentary switch releases the brakes from the selected joint and applies the drive command (+ or –). Releasing the switch inhibits the drive command and reapplies the brakes to the selected joint.	
	• RMS Mode Entry Control A pushbutton is provided to enable the Operator to enter the Mode Selection into the computer	S-9
	• Automatic Sequence Proceed/Stop Control A two-position momentary toggle switch is provided to enable the Operator to start and stop a Pre-stored or Operator Commanded Automatic Sequence. The AUTO SEQ switch function is enabled in the computer software only when one of the following modes has been selected and entered into the computer. OPR CMD, AUTO 1, AUTO 2 AUTO 3 and AUTO 4. The "READY" and "IN PROG" annunciators are used as system status indicators while using this switch. During the execution of a preprogrammed auto sequence, the arm comes to rest at the preprogrammed pause points for an indefinite period of time. The "IN PROG" annunciator goes off and "READY" annunciator comes on and commanding "PROCEED" would continue on the trajectory. The "STOP" position is used to bring the arm to rest in a "PAUSE" configuration when desired by the operator.	S-3
	• Rate Hold A maintain on/off pushbutton is provided on the hand grip of the Rotational Hand Controller (RHC) in order that the DTA Operator may command rate Hold and cancel Rate Hold without having to remove his hand from the Hand Controller. Once Rate Hold is selected, the rate is achieved by the use of hand controller.	RHC
	• Safeing Start/Auto/Cancel A three-position switch, maintain in the "up" position, momentary in the "down" position with spring return to centre, is provided to enable the Operator to execute and cancel the RMS Safeing Route. In the Auto Safeing Mode, the RMS Safeing Routine is initiated by the MCIU, upon detection of certain critical "BITE" failures. By moving the switch to the SAFE position the Operator may bring the arm to rest using servo control loops. Once selected, the SAFEING command disables the Auto function and the RMS remains in the Safeing state until Safeing is cancelled by the Operator. Cancelling is commanded by moving the switch to the CANCEL position.	S-7

TABLE 1

CONTROL AND DISPLAY COMPONENT FUNCTIONS (SHEET 3 OF 8)

FUNCTION	ELEMENT	REF FIG. 15
CONTROL FUNCTIONS (contd)	• Brakes On/Off Selector A two-position lever lock switch is provided to enable the SRMS operator to apply or release simultaneously the brakes to all joints of the manipulator arm. The switch is labelled ON in the "up" position and OFF in the "down" position, and lever locked in the OFF position. The brakes in each joint of the SRMS normally function to lock each joint in order that a specific arm configuration can be maintained. As such, the brakes are operationally restricted to application only when movement in the joints has been brought to rest by other means. For an emergency, however, the brakes may be applied to bring the arm to rest.	S-6
	• Vernier/Coarse Select A two-position switch enables the DTA Operator to change the Maximum Rate Limits of End Effector.	S-5
	• High/Medium/Low Select A three-position switch enables the DTA Operator to vary the rate of the Rate Limit selected.	S-4
	• Joint Selection An eight-position rotary switch is provided to permit the operator to select an individual joint to be driven in the single joint drive mode or direct drive mode. The JOINT select rotary switch also selects the appropriate joint angle to be displayed on MONITOR 3 when JOINT ANGLE position is selected on the PARAMETER select rotary switch.	S-12
	• Single/Direct Drive Command A three-position momentary switch enables the Operator to drive the individual MDF RMS joint selected in a clockwise or anticlockwise direction. Center position on the switch is OFF. In the DIRECT MODE, actuation of the SINGLE/DIRECT DRIVE select switch in either (+) or (–) direction releases the brakes in the selected joint and drives the joint to change the angle. Release of the switch commands zero drive in the joint and causes reapplication of the brakes. In the SINGLE MODE, actuation of the SINGLE/DIRECT DRIVE select switch in the (+) or (–) direction drives the selected joint in the (+) or (–) direction under computer control. Release of the switch commands the joint to come to rest. With the arm fully extended (and parallel to the longeron) and as viewed from the Operator's station, the UP (+) position of the single DIRECT DRIVE switch commands Rightward Yaw movement, upward Pitch Movement and Clockwise Roll Movement. Selection of the Down (–) position of the switch commands movements in the opposite direction to those described above.	S-13
	• RMS PWR Primary/OFF/Secondary Select Three-position lever locked switch selects power from two sources. Center position off and lever locked in primary and secondary positions.	S-15

TABLE 1

CONTROL AND DISPLAY COMPONENT FUNCTIONS (SHEET 4 OF 8)

FUNCTION	ELEMENT	REF FIG. 15
CONTROL FUNCTIONS (contd)	• MRWS PWR ON/OFF Select Two-position lever locked switch selects power ON/OFF to the DTA. Switch lever locked in OFF position.	S-14
MODE STATUS INDICATION	• Mode Status Indication A matrix of 12 MODE SELECT annunciator lights indicates the current Control Mode Only one of the annunciator lights is activated at any time. – Mode Select TEST – Indicates that theRMS is in the Test Mode – Mode Select OPR CMD – Indicates that the Operator Commanded Auto Sequence Mode has been selected and entered into the computer – Mode Select AUTO 1 – Indicates that the RMS is in the Pre-stored Auto Sequence Assignment No. 1 Mode – Mode Select AUTO 2 – Indicates that the RMS is in the Pre-stored Auto Sequence Assignment No. 2 Mode – Mode Select AUTO 3 – Indicates that the RMS is in the Pre-stored Auto Sequence Assignment No. 3 Mode – Mode Select AUTO 4 – Indicates that the RMS is in the Pre-stored Auto Sequence Assignment No. 4 Mode – Mode Select ORBITER – Indicates that the RMS is in the Manual Augmented Mode and Control action is referred to the Orbiter Referenced Coordinate System – Mode Select END EFF – Indicates that the RMS is in the Manual Augmented Mode and control action is referred to the End Effector Referenced Coordinate System – Mode Select MIXED – Indicates that the RMS is in the Manual Augmented Mode and Control action is referred to the Split Payload/Orbiter Coordinate System – Mode Select PAYLOAD – Indicates that the RMS is in the Manual Augmented Mode and Control action is referred to the Payload Referenced Coordinate System – Mode Select SINGLE – Indicates that the RMS is in the Single Mode. This Mode is under computer control – Mode Select DIRECT – Indicates that the SRMS is in the Direct Mode. This annunciator is activated by the selection of the DIRECT position on the MODE rotary switch and the selection of Brakes ON. The above annunciators, except for Direct Mode annunciator, are activated upon reception of the mode select and mode enter commands from the computer.	DS-1 & DS-10

0081-017(4)
III

TABLE 1

CONTROL AND DISPLAY COMPONENT FUNCTIONS (SHEET 5 OF 8)

FUNCTION	ELEMENT	REF FIG. 15
MODE STATUS INDICATION (contd)	• Automatic Sequence Status Indicators Two annunciator lights indicate the status of a selected pre-stored or Operator Commanded Automatic Sequence or the Test sequence.	DS-3
	– READY – With MODE rotary switch in AUTO 1, 2, 3, or 4 positions, indicates that the initial conditions for a selected Pre-stored Automatic Sequence has been satisfied and that the operator may now PROCEED to execute the Pre-stored Auto Sequence. OR with MODE rotary switch in OPR CMD position, indicates that the computer keyboard entry for an Operator Commanded Automatic Sequence has been computed and accepted by the computer, and that the operator may now PROCEED to execute the Operator Commanded Auto Sequence. With MODE rotary switch in the TEST position, indicates that the test sequence is ready to be executed	
	– IN PROG – Indicates that the computer is in the process of executing the selected Automatic Sequence or the Test Sequence.	
	• Brake Status Indication A two-state electromechanical flag indicates the status of the brakes either all brakes ON or all brakes OFF. When in DIRECT drive mode, the brake in the driven joint is released; the brake status indicator however continues to annunciate all brakes ON	DS-4
	• Software Stop Status Indication A two-state electromechanical flag indicates that the software has intervened to bring the arm to rest. Display of a BARBER POLE indicates that a STOP has occurred. Display of a BLANK STATE indicates that a STOP has not been commanded by the computer.	DS-6
	• Safeing Status Indication A two-state electro-mechanical flag indicates to the Operator the Status of the RMS Safeing routine. The BLANK state signifies that hardware safeing is not in operation. The BARBER POLE appearance indicates that Safeing is in progress. The BARBER POLE appears when either the Operator, or the computer executes safeing. The BLANK state indication appears only whenever Safeing is not in effect.	DS-2
	• Rate Hold Status Indication A two-state electro-mechanical flag indicates status of rate hold either on or off.	DS-8
	• Rate Selection Status Indication A two-state electro-mechanical flag indicate min RMS Rate on or off	DS-7

0081-017(5)
III

TABLE 1

CONTROL AND DISPLAY COMPONENT FUNCTIONS (SHEET 6 OF 8)

FUNCTION	ELEMENT	REF FIG. 15
CAUTION & WARNING ANNUNCIATORS	• Master Alarm The Master Alarm Light is activated simultaneously with the occurrence of any Caution or Warning Annunciator Light. A Master Caution and Warning Tone is provided to gain the attention of the Operator. The Tone is activated simultaneously with the illumination of any Caution or Warning Annunciator light and both may be reset by the Operator using the Master Alarm Pushbutton.	S-8
	• Caution Annunciators The lower four lights of the Caution and Warning annunciator block are caution annunciators. – Caution SINGULAR – Indicates that the configuration of the Manipulator Arm is approaching an Arm Singularity condition. – Caution CONTR ERR – Indicates certain joint abnormal conditions which may not be detected by BITE – Caution CHECK CRT – Indicates that a failure message is available to the operator on the Orbiter CRT. – Caution REACH LIM – Indicates that the Manipulator Arm has reached a configuration that one of the joints is close to its reach limit.	DS-2 & DS-11
	• Warning Annunciators The upper six lights of the annunciator block are warning annunciators. Each warning annunciator, when activated, indicates that the Operator is required to take specific corrective action. One of the six annunciators is a spare. – Warning MCIU – Indicates that a failure has occurred in the MCIU – Warning ABE – Indicates that a failure has occurred in the Arm Based Electronics (ABE) – Warning GPC DATA – Indicates that invalid data has been transmitted by the Orbiter GPC to the SRMS MCIU. This warning signifies either a GPC or GPC to MCIU data communications failure as detected by MCIU BITE provisions. This warning is accompanied by the simultaneous execution of the SRMS Safeing Routine – Warning DERIGIDIZE – Indicates that the End Effector to Payload Grapple Point Interface has derigidized without having been commanded to do so by the Operator – Warning RELEASE – Indicates that the End Effector has released the Payload Grapple Point without having been commanded to do so by the Operator.	

0081-017(6)
III

TABLE 1

CONTROL AND DISPLAY COMPONENT FUNCTIONS (SHEET 7 OF 8)

FUNCTION	ELEMENT	REF FIG. 15
CAUTION & WARNING ANNUNCIATORS (contd)	• Rate Selection Status Indicator A three-state electro-mechanical flag indicates status of rate selection switch (S4) either high/medium/low.	DS-9
NUMERICAL READOUT	• Numerical Readout Three digital indicators are located in the prime viewing area of the panel. The three indicators are associated with the PARAMETER SELECT rotary switch. A five-position Rotary Switch enables the Operator to select readout of the following RMS parameters and annunciator/indicator test – Annunciator and Indicator Lamp test – End Effector Position – End Effector Attitude – Joint Angle – Spare When TEST is selected, hardwired connections within the C&D subsystem light all elements of the Numeric Indicators by displaying + 8.8.8.8 on each indicator and also activate all Caution and Warning Annunciators, all Mode Annunciators, the Master Alarm Annunciator, The READY Annunciator, the IN PROGRESS Annunciator and sound the audible alarm. When POSITION is selected, the three indicators display the X, Y, and Z positions of the End Effector in inches in digital indicator Nos. 1, 2, and 3, respectively, relative to the Orbiter structural body coordinate system. The display has a resolution of ± 1 in. When ATTITUDE in selected, the three indicators display the PITCH, YAW, and ROLL angles of the End Effector on indicators 1, 2, and 3, respectively, in degrees relative to the axes of the Orbiter Structural Coordinate System. The angles are displayed with a resolution of 0.1 deg and in the range – 180 to +180 deg. When JOINT ANGLE is selected indicator No. 3 (the right hand indicator) displays the angle of the joint selected at the JOINT SELECT switch. The angle will be displayed in the range -180 to +180 degrees for all joints selected, except wrist roll, which is -447 to +447 degrees. With JOINT ANGLE selected, indicators No. 1 and No. 2 are BLANKED.	A-1,A-2, A-3 S-11
PANEL LIGHTING CONTROLS	• Annunciator Brightness Select A two-position maintain toggle switch enables the Operator to adjust the brightness of all annunciator lights, Digital Indicators, and Master Alarm Light. When BRIGHT is selected the Brightness of all annunciator lights (when illuminated) increases to a fixed maximum level. When VAR is selected the Brightness of all annunciators and Numerical Indicators is controlled from low to medium brightness by a continuously variable Rotary Control Switch.	S-2 R-1

0081-017(7)
III

TABLE 1

CONTROL AND DISPLAY COMPONENT FUNCTIONS (SHEET 8 OF 8)

FUNCTION	ELEMENT	REF FIG. 15
PANEL LIGHTING CONTROLS (contd)	• Integral Panel Lighting Adjustment A continuously variable Rotary Control is provided to enable the Operator to adjust the Brightness of: – Panel nomenclature – Electromechanical flags	R-2
EXTERNAL LIGHTING CONTROL	• Three continuously variable rotary Controls are provided to enable the Operator to adjust the Brightness of: – Front Flood Light – Overhead Left Flood Light – Overhead Right Flood Light	A-4, A-5, A-6
UTILITY POWER CONTROL	Utility PWR ON/OFF A two-position lever lock switch selects power ON/OFF for the power receptacle.	S-1
	Utility PWR Receptacle Three-prong capped connector for 115 V 60 Hz PWR	J-1
HAND CONTROLLERS (GFE)	Rotational Hand Controller Control of OCP about Z axis Translational Hand Controller Control of OCP along X and Y axis	
COMPUTER SUB PANEL (GFE)	Four Pushbutton/Annunciators Switches are provided to: Computer Run – Puts computer in operational mode Computer Freeze – RMS ARM Stops and computer will not accept switch or hand controller signals from C&D panel Manip Run – Activate Hyd. PWR Supply for RMS arm Manip STOP – Shuts down Hyd. PWR Supply for RMS ARM. Each Computer/Manipulator switch is hard-wired in series with corresponding controls at other MDF stations for coordinated mode control. All stations must be in agreement (switch DEPRESSED) to activate a run mode but any station can down mode (STOP or FREEZE).	

0081-01(8)
III

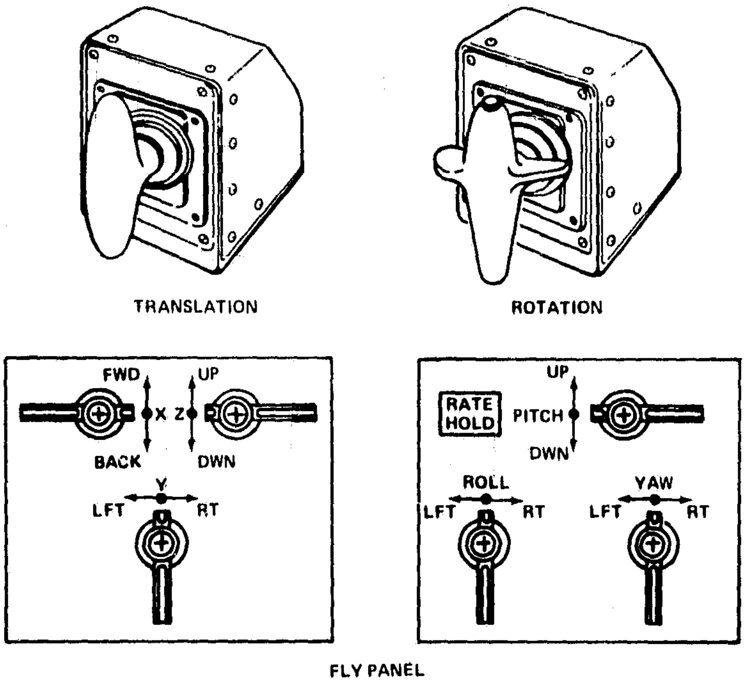

0081-018
III

Figure 17. RMS Controllers

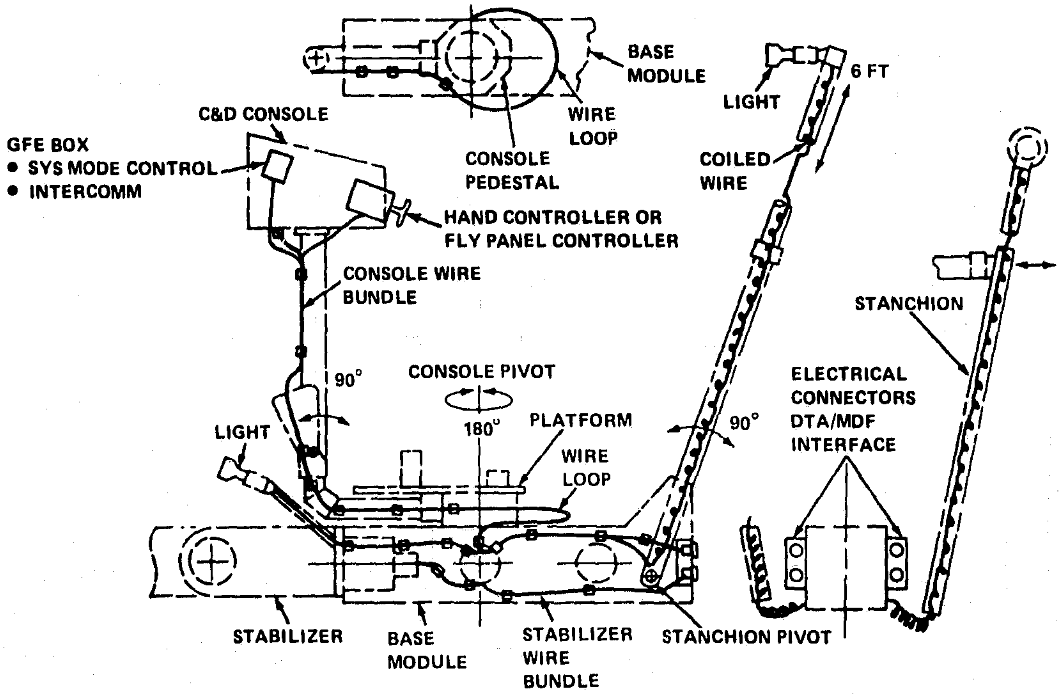

0081-019
III

Figure 18. OCP Wiring Harness Routing

3.2.3 Lighting/Communications

Each external light is controlled by individual dimmer switches as shown in Figure 19, so that work-site illumination requirements can be developed during the simulation program. A headset plug is provided on the GFE computer mode control box located on the C&D panel, so the OCP operator can communicate with the existing intercom system in the MDF facility.

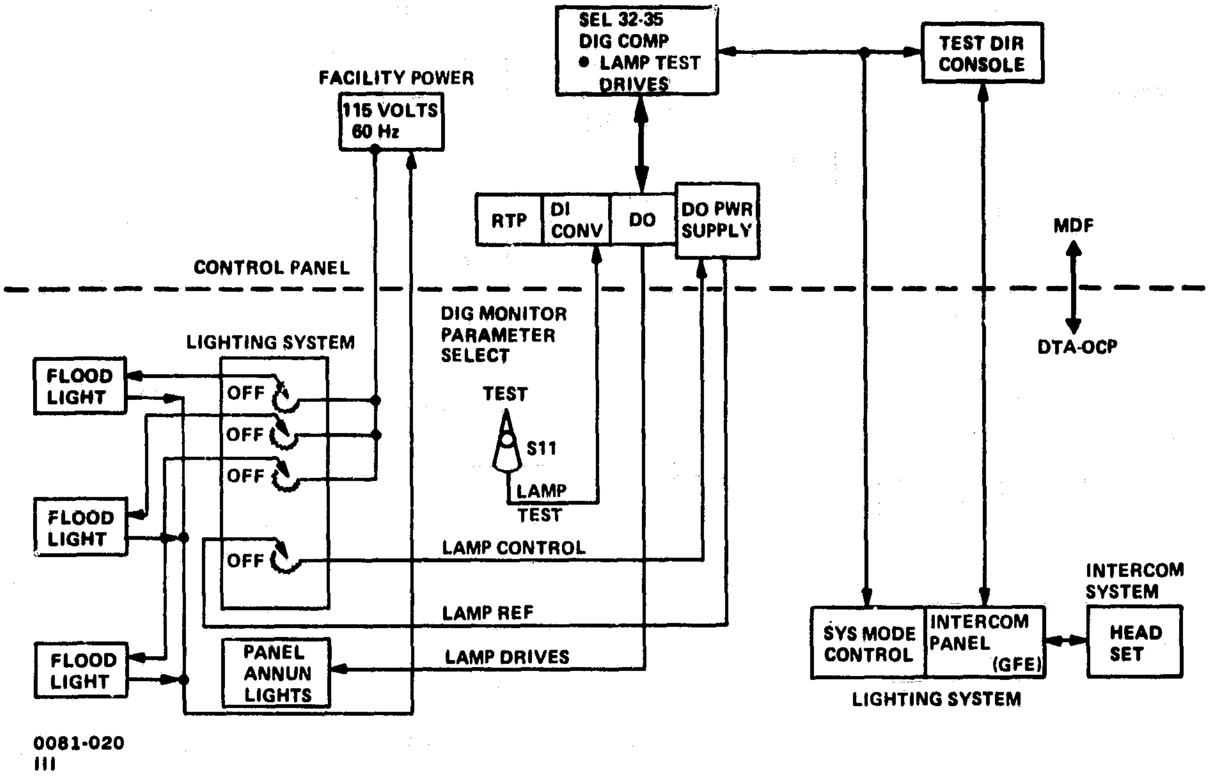

Figure 19. Lighting/Power/Intercomm Schematic

3.3 SIMULATOR INTERFACES

The OCP-DTA is used in the Johnson Space Center Manipulator Development Facility (Figure 20). This facility, located at Building 9A, contains a 56-ft x 80-ft air bearing floor and a 50-ft hydraulically actuated manipulator arm for simulating the Shuttle RMS. The DTA is mounted to one of various sized air bearing platforms that can be attached to the simulator manipulator end effector. The facility uses a SEL-32-35 digital computer to simulate the orbiter computer, RMS control system, mission environment equations of motion and interfaces with the operators panel at both the test conductors console and the OCP-DTA via the Real-Time Peripheral (RTP) interface equipment.

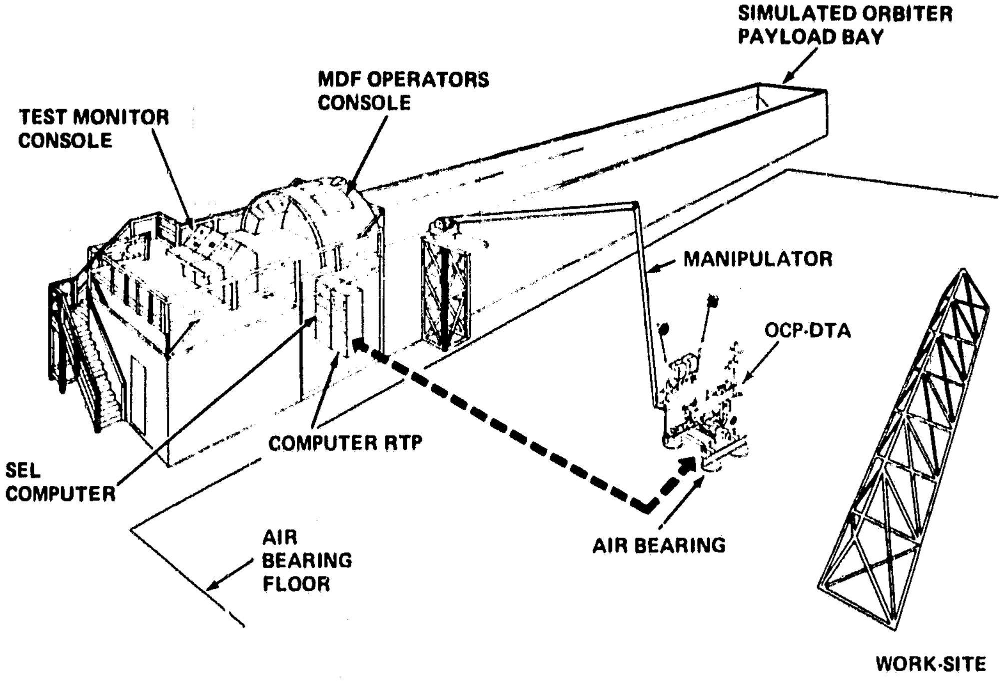

0081-021
III

Figure 20. OCP-MDF Simulation Test Configuration

3.3.1 Mechanical Interfaces

The two major mechanical interfaces are the tiedown hardware of the OCP to the air bearing platform and the interface hardware with the RMS snare end effector.

A DTA/Air Bearing Sled arrangement is shown in Figure 21. Two, 5-in. deep x 36-in. long aluminum channels are attached to the forward and aft ends of the base assembly. These channels are used to span and attach to the two top braces of the air bearing sled. The bolted attachment is typical at four locations.

This arrangement places the DTA operator approximately 2-1/2 ft above the air bearing floor and provides an overall operating envelope of 10 ft x 3 ft x 11 ft. The DTA is positioned on the air bearing sled to allow clearance for the 22-in. diameter capture envelope required for the automatic mating of the MDF arm and the Shuttle snare-type end effector. Figure 22 shows the OCP/RMS mechanical interface. Figure 23 shows the GFE air bearing sled.

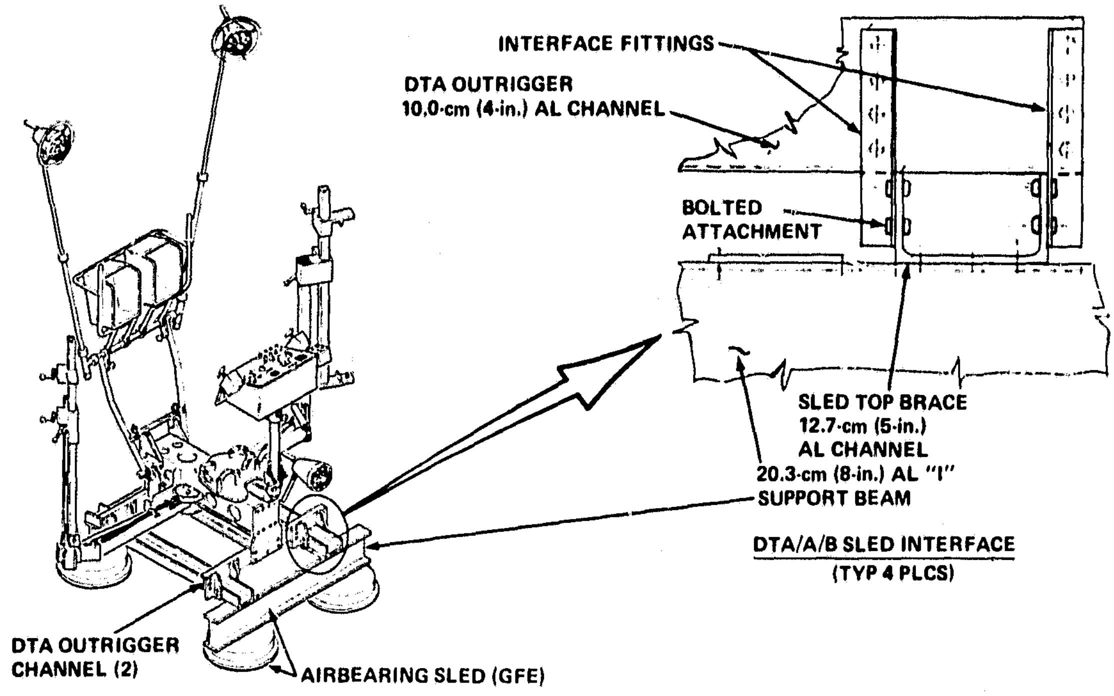

0081-022
III

Figure 21. DTA Air Bearing Sled Structural Interface

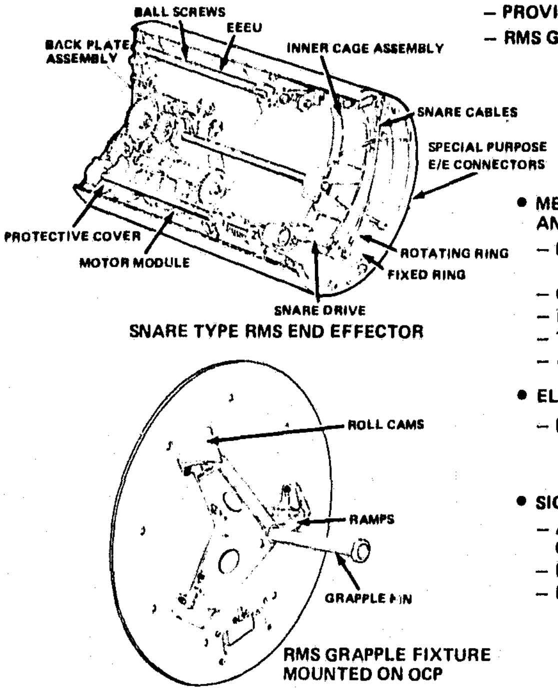

- PROVIDE MECH/ELECTRICAL/SIGNAL INTERFACE
- RMS GRAPPLE MRWS

INTERFACE REQUIREMENT

- MECHANICAL – CANADIAN SNARE END EFFECTOR AND GRAPPLE FIXTURE
  - PRECAPTURE MISALIGN LIMITS – 4 IN. ± 15°
  - CAPTURE SPEED – 0.33 TO 0.95 FT/SEC
  - RIGIDIZE SPEED – 8 TO 5.7 IN./SEC
  - TORQUE CAPABIL. – 350 FT-LB
  - RELEASE IMPULSE – 0.3 LBF–SEC
- ELECTRICAL (100 WATTS AVAIL)
  - MRWS POWER = • D&C – 20 WATTS*
    • HAND CONT – 20 WATTS*
    TOTAL 40 WATTS
- SIGNAL
  - ATTITUDE AND TRANSLATION HAND CONTROLLER SIGNALS
  - RMS CONSOLE SIGNALS
  - ECLS SIGNALS

0081-023
III

Figure 22. OCP/RMS Mechanical Interface Definition

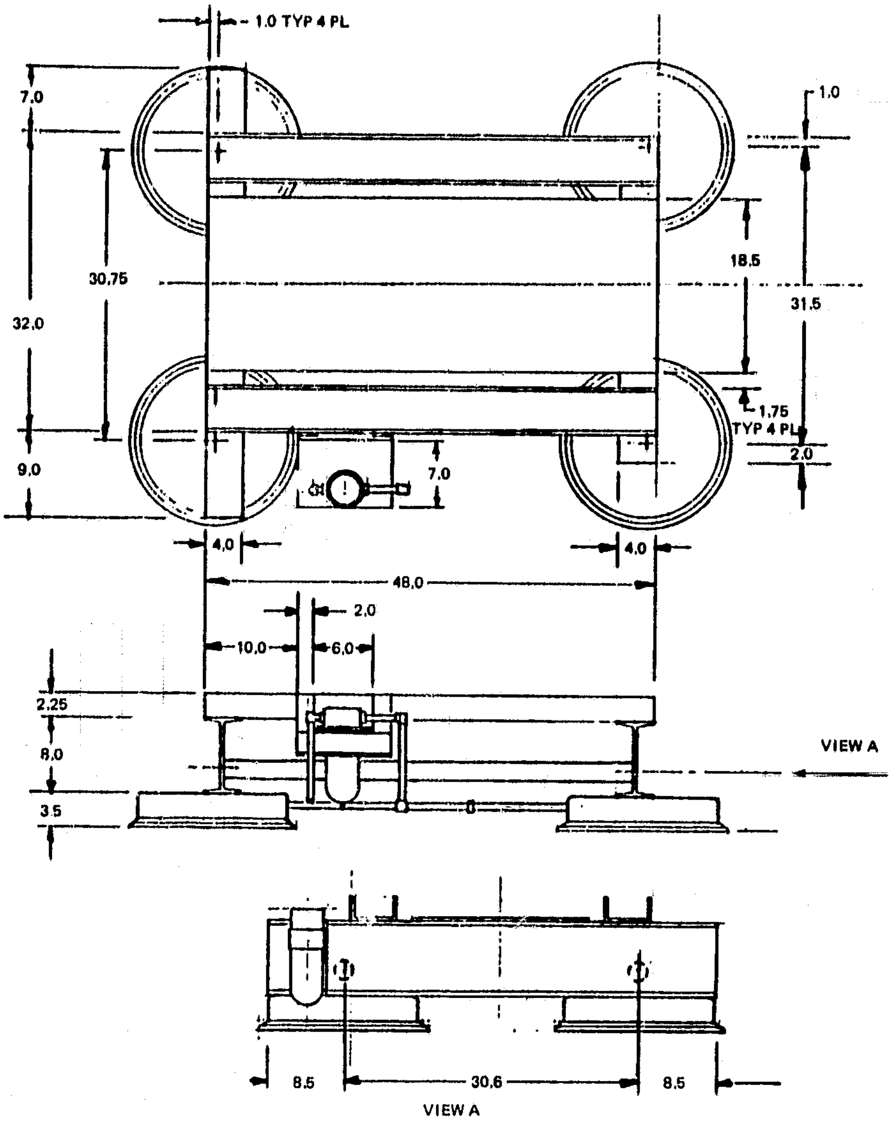

ALL MEASUREMENTS GIVEN IN INCHES

0081-024
III

Figure 23. MDF – Air Bearing Platform

3.3.2 Electrical Interfaces

The functional schematic (Figure 24) depicts the various electrical interfaces and signal flow between the components of the OCP-DTA and the MDF. The center dash line indicates the OCP-DTA to MDF interface point. The various connections between the components on the OCP-DTA and the MDF computer and RMS for the control and operation of RMS are shown; the intercom and power distribution networks are depicted.

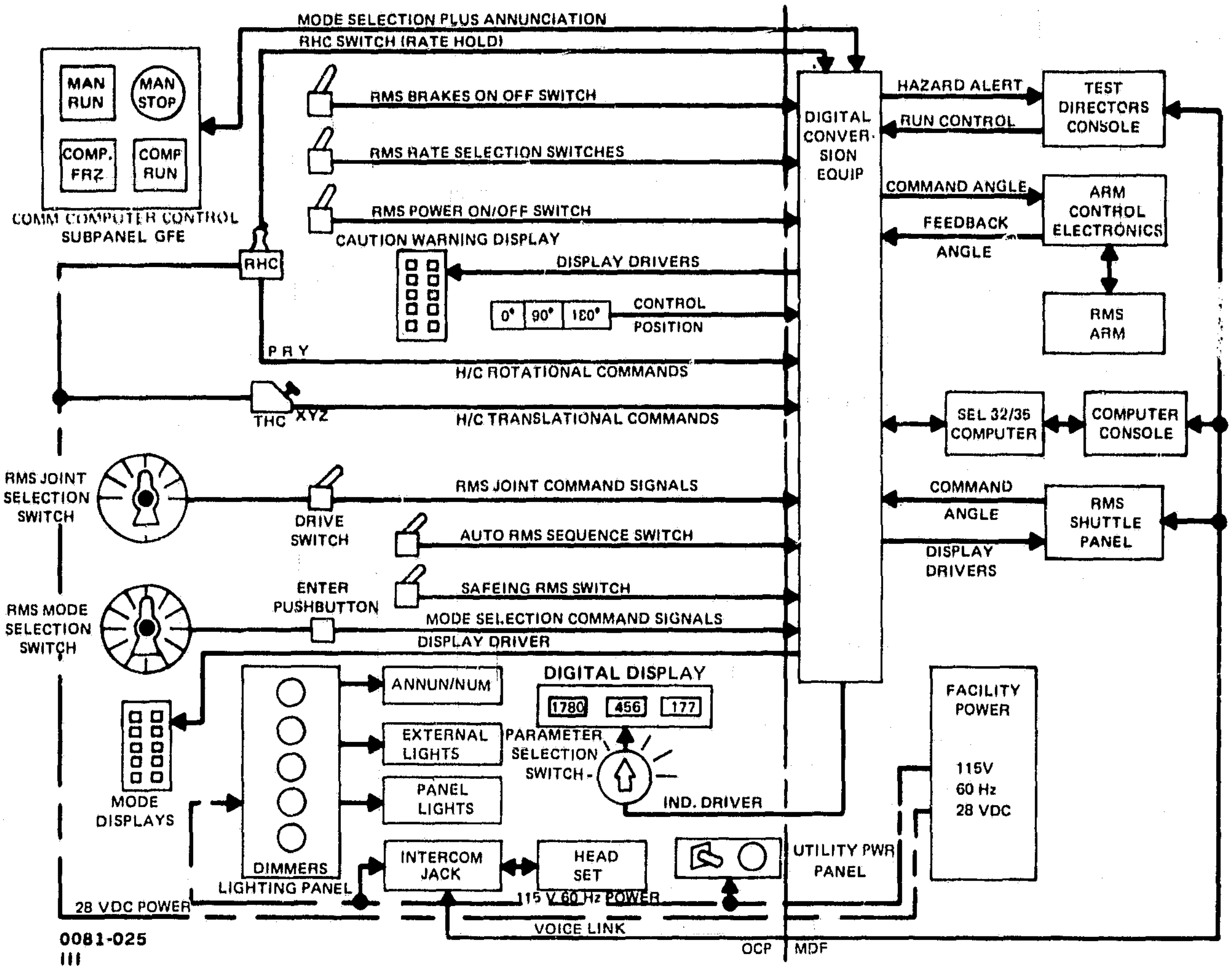

Figure 24. DTA Electrical System Functional Flow

All interfaces to the left of the dashed line are provided by Grumman. Wiring is terminated at cable interface connectors at the aft end of the OCP. All functions and equipments to the right of the dashed line including cabling, power supplies, digital conversion equipment (RTP), and SEL 32-35 software are supplied by NASA.

3.3.3 RMS Subsystem

The functional schematic (Figure 25) depicts the primary signal paths for all OCP-DTA directed MDF-RMS subsystem functions. The RMS can be controlled in the manual augmented mode by means of the 3 DOF rotational and translational hand controllers and in the direct mode by means of individual joint switches. A mode selection switch allows selection of not only the drive mode, but also of the coordinate reference system. Various annunciators and indicators are provided to indicate the status of the RMS system and to indicate any failures or unsafe modes of operation. In addition, the switches provide the control power to the RMS joint drive motors and brakes and vary the rate of the RMS end effector. All software currently used to drive the MDF-RMS is used for OCP operations.

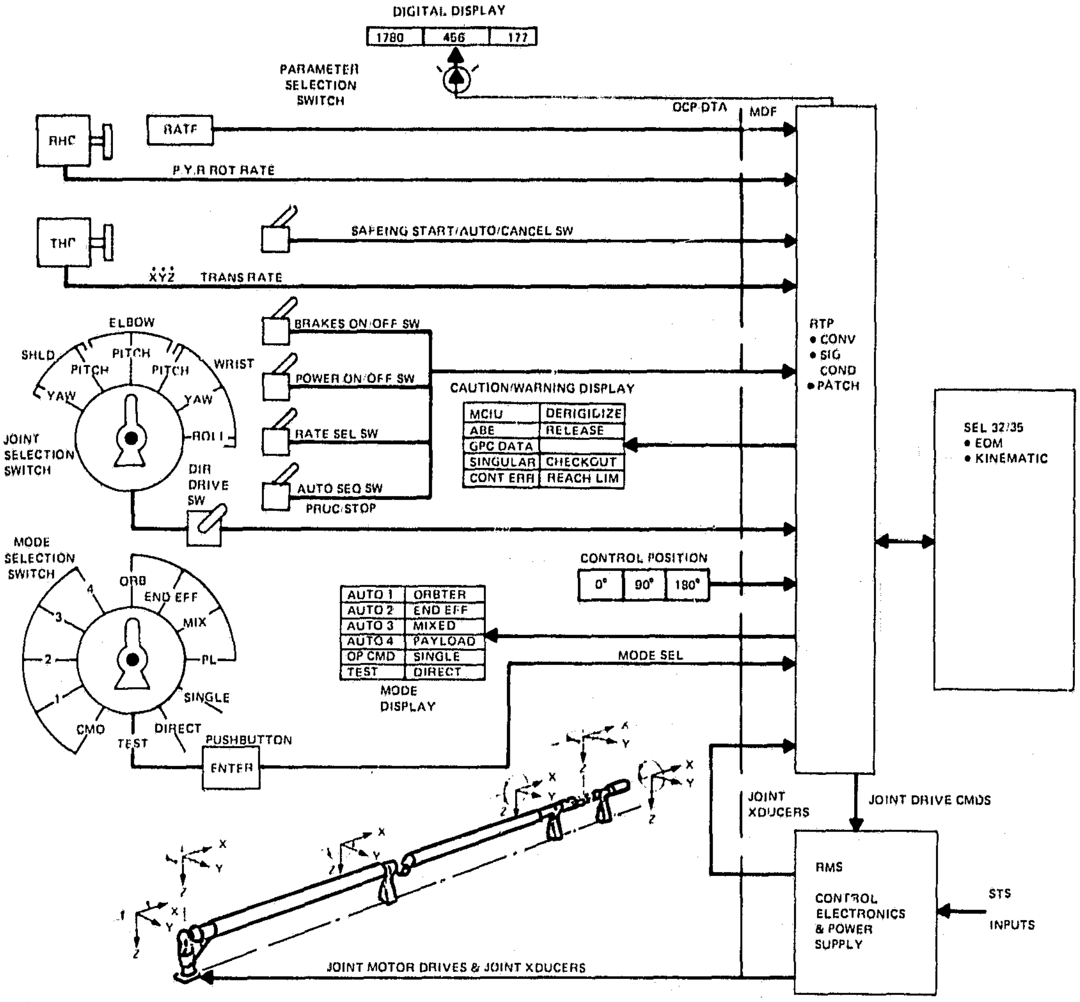

0081-026
III

Figure 25. RMS Functional Flow

3.3.4 Electrical Power and Signals

The following power and signal interfaces are provided GFE:

- Power

- Lighting:	115 v, 60 Hz, 360 W
- C&D panel:	28 VDC, 4.0 A

- **Real-Time Peripheral Signals**

No.	Type	Signal Characteristics
3	Digital/analog converters	± 10 VDC, 10 mA
6	Analog/digital converters	TBD (proportional rate controller)
43	Discrete inputs	TBD (DTA will provide contact closure)
32	Discrete outputs	28 VDC, 25 mA

3.3.5 Communications

The DTA utilizes the present MDF intercom system. A GFE intercom panel is mounted to the DTA, and a heaset plugged into the panel. The facility signals are routed via GFE supplied hardware to the DTA GFE intercom panel.

3.3.6 Software

The MDF computer system master control console and peripheral equipment are located in the MDF. The present computer is the SEL32/35 with 256 K bytes of core. Programming will be interlevered Fortran and assembly language. Manual inputs and control signals from the OCP C&D console are processed by the computer system that contains the manipulator control system algorithms and has pre-programmed software boundaries to limit travel and speed of the manipulator arm and its joints. Display signals are fed back to the operator and test director's consoles for status indication through panel displays.

The coordinate references system (Figure 26) for the manipulator control system is used when the hand controllers/display console is located in its most forward operational position. Computer software will prohibit all motions except that in the plane of the air bearing floor.

A preliminary analysis indicates the SEL 32/35 and Test Conductors Console data acquisition requirements are adequate to support Phase I testing.

Existing MDF software is used to minimize software changes.

END EFFECTOR REFERENCED

- TRANSLATION CONTROL CAUSES TRANSLATION OF THE END EFFECTOR CENTER POINT ALONG THE END EFFECTOR AXIS INDICATED. THE END EFFECTOR AXIS SYSTEM ROTATES WITH THE ROLL MOTOR. THE DRAWING BELOW DEPICTS THE END EFFECTOR AXIS SYSTEM IN THE 0 ROLL ORIENTATION.
- ROTATION CONTROL IN PITCH, ROLL AND YAW CAUSES ROTATION OF THE END EFFECTOR CENTER POINT ABOUT THE END EFFECTOR X, Y AND Z AXES RESPECTIVELY.

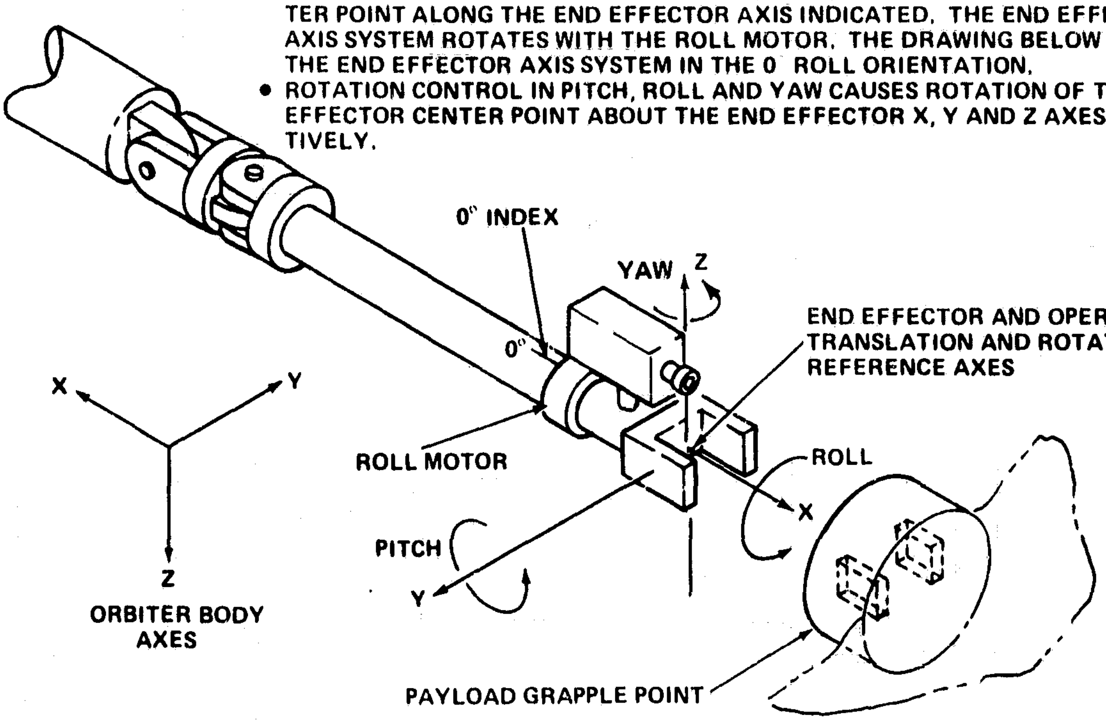

NOTE: 1. Operator translation reference axis is parallel, but opposite in sense to the Orbiter body axes.

2. Motion in Z, roll, and pitch locked out by the computer when DTA is used on the air bearing floor.

0081-027
III

Figure 26. MDF Manipulator Coordinate Reference System

Section 4

MDF DESCRIPTION

The MDF is located in the west end of Building 9A at NASA-JSC. The working area available for the MDF activities is approximately 93-ft wide x 125-ft long x 57-ft high. The MDF contains a 50-ft, hydraulically activated manipulator arm to which the OCP-DTA is attached. The manipulator arm positions the OCP-DTA on the precision 56 ft x 80 ft, air bearing floor by means of control inputs from the OCP operator which are processed by the MDF computer equipment and in turn are fed to the manipulator joint drive servos.

A detailed description of the various systems, subsystems, and equipment of the MDF can be found in JSC Document 11029, Revision A. Figure 20 depicts the OCP operating on the MDF air bearing floor.

Section 5

DEVELOPMENT TEST PLAN

5.1 INTEGRATION AND CHECKOUT PLAN

The Integration and Checkout plan verifys that the OCP-DTA, and the OCP/MDF meet the established design performance requirements. The plan is broken down into three phases as shown in Figure 27: Component/Subsystem Checkout Phase; DTA Assembly, Integration, and Checkout Phase; and a DTA/MDF Integration and Checkout.

During the component/subsystem bench-type tests, functional-type tests are performed on components and subassemblies to verify operation. This helps to identify any problem areas early in the manufacturing phase and generate any test data required to verify DTA performance specifications. In the fully assembled DTA integrated/checkout phase, each subsystem is functionally checked to ensure proper operation, and all interfaces with the MDF will be verified before shipment to JSC. After it arrives at JSC, the DTA is installed on the air bearing sled and the RMS end effector attached to the DTA. All DTA subsystems are functionally checked and DTA/MDF electrical interfaces verified before the connectors are mated. The OCP/RMS operation and C&D console functions are verified and a site acceptance test run. A schedule of test events at JSC is shown in Figure 28.

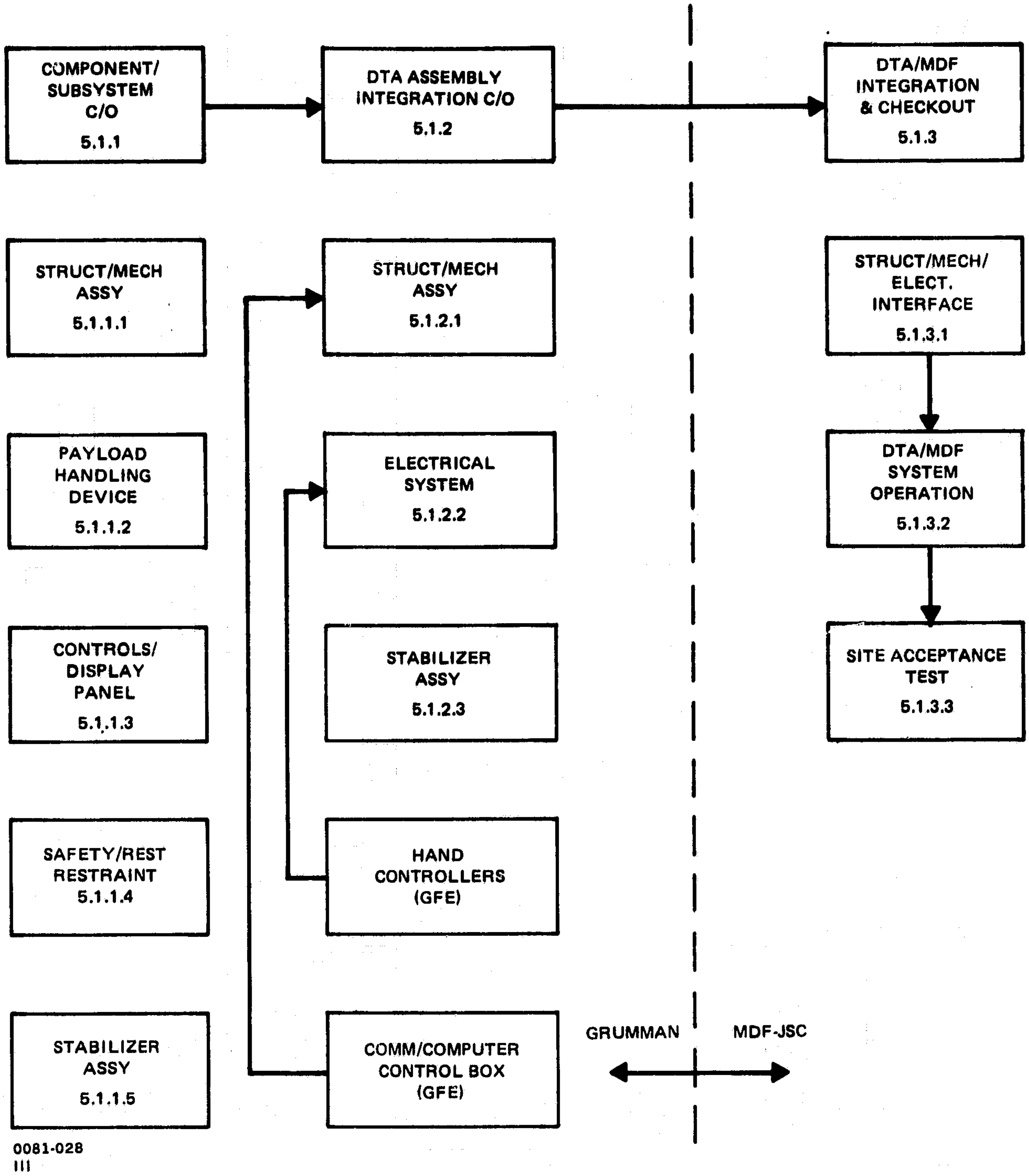

Figure 27. OCP-DTA Integration and Checkout

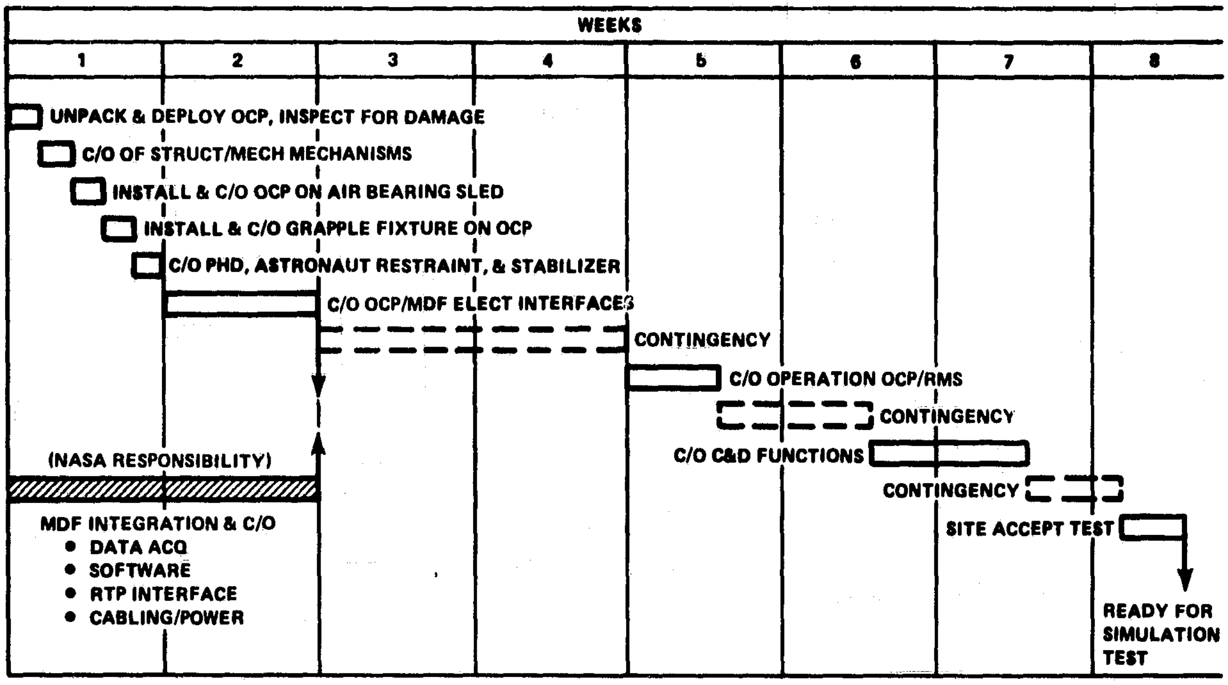

Figure 28. OCP/MDF Integration and Checkout Schedule at JSC

The Integration and Checkout Plan is presented in tabular form for each test phase and broken down into major OCP-DTA elements. Each test requirement is specified as are the test procedure, test data, tolerances, and any special GSE equipment required. This format allows revisions or updates to the plan to be incorporated without revising the whole document.

STRUCTURAL/MECH ASSEMBLY
5.1.1.1

- LIGHT STANCHION DEPLOYMENT/ STOWED MECHANISMS OPERATION
- C&D DEPLOYMENT ADJUSTMENT MECHANISM
- STRUCTURAL INTEGRITY VERIFIED BY ANALYSIS

PAYLOAD HANDLING DEVICE
5.1.1.2

- VERIFY DEPLOYMENT/STOW MECHANISM
- PAYLOAD CLAMP MECHANISM OPERATION
- STATIC STRENGTH VERIFICATION OF PAYLOAD CLAMPS

C&D PANEL
5.1.1.3

- PANEL WIRING CONTINUITY CHECK
- VERIFY OPERATION OF CONTROL PANEL SWITCHES, METERS & DISPLAYS

SAFETY/REST RESTRAINT
5.1.1.4

- VERIFY OPERATION

STABILIZER ASSEMBLY
5.1.1.5

- VERIFY OPERATION

0081-030
III

5.1.1 Component/Subsystem Level at Grumman

5.1.1 Component/Subsystem Level at Grumman

PARA	TEST REQMT	TEST PROCEDURE	TEST DATA & TOLERANCE	GSE EQUIP REQD
5.1.1.1 • Structural/Mech Assembly (No structural static test is required. Structural integrity is demonstrated by analysis)	• Verify operation of light stanchion deployment & stowed mechanisms	• Unscrew lock collar & extend each vertical light stanchion to its extreme position. Lock collar. Stanchions shall remain in this position. Measure distance each stanchion has extended. Unlock and move stanchions to various intermediate positions & lock. Stanchions shall remain in these positions. Stanchions shall move easily up & down & be locked in any position chosen by hand tightening the lock collars.	• Vertical adjustment, 69 in.	• Tape measure 6 ft long
		• Above test repeated for horizontal adjustment of stanchions.	• Horizontal adjustment, 10 in.	
		• Move swivel lamp holders and check for freedom of motion & ensure elect wires do not snag on structure.		
		• Remove pip pin from tool box latches & rotate tool boxes to their stowed position & relock. Pip pins shall be removed & inserted easily & tool boxes shall rotate freely.		
	• Verify operation of C&D console deployment & adjustment mechanism	• Rotate console pedestal from its stowed position to its operating positions. Motion should be smooth.	• Console pedestal rotation total 90°	• Angle measuring device (protracter)
		• Pull pin & move console to extreme vertical position. Measure total vertical travel. Console motion shall be smooth. Move console to intermediate positions. Pins shall lock console in each console position.	• 8½-in. console height adjustment	• Tape measure, 6 ft long
		• Check that wire bundle loops around console pedestal pivot & panel vertical adjustment are adequate & that the wires are not crimped or insulation damaged.		
5.1.1.2 • Payload Handling Device	• Verify operation of payload handling device deployment & stowing mechanism	• Remove pip pin & rotate support stanchion from its stowed operational position and lock. Stanchion shall rotate freely & pip pin shall be inserted and removed easily.	• Support stanchion rotation 90°	• Angle measuring device
		• Activate swing arm lock release lever & rotate swing arm from its off-line position to intermediate & operating positions and lock. Arm should rotate freely & smoothly & lock should hold arm in all positions.	• Swing arm rotation 85°	

5.1.1 Component/Subsystem Level at Grumman (contd)

PARA	TEST REQMT	TEST PROCEDURE	TEST DATA & TOLERANCE	GSE EQUIP REQD
5.1.1.2 (contd)		• Rotate pedestal crank and move pedestal vertically through its full range of travel. Motion shall be smooth. Pedestal shall remain in position when 50-lb load is applied to it.	• 50-lb load, max	• 50-lb dummy payload
		• Rotate upper pedestal crank clamp & move vertically to various positions. Clamp motions shall be smooth & shall hold securely in any positions.	• 55 in. max distance between payload clamps	• Tape measure 6 ft long
		• With 50-lb dummy test load installed between payload clamps operate pedestal vertical adjustment & rotate swing arm. Motion shall be free & locks shall hold payload in any position selected.	• 50-lb load, max	• 50-lb dummy payload
5.1.1.3 • C&D Panel	• Panel wiring continuity & checkout	• Verify that control panel wiring is in accordance with Grumman dwg no. C76-212. • Verify that all connectors & terminal strips are identified correctly & are legable • Male part of connectors are without power when connectors are unmated. • Receptacles should be positively keyed or pinned to their mounting surface. • Power & signal wiring are not routed thru same cable bundle or harness. • All structural grounds are made properly (all paint, anodize coating scraped off). • All shields connected properly. • All wires are configured, located, clamped & supported to eliminate any possibility of mechanical stress on wires, terminals & connectors or abrasion from adjacent structure. • All wire terminal connections (soldering, crimping, etc) are made properly.		• Ohmmeter

5.1.1 Component/Subsystem Level at Grumman (contd)

PARA	TEST REQMT	TEST PROCEDURE	TEST DATA & TOLERANCE	GSE EQUIP REQD
5.1.1.3 (contd)	● Verify operation of panel switches, meters & annunciator lights & flags	● Apply power to each circuit and verify that all switches, lights & annunciator flags are operating properly (Grumman dwg no. C76-212).		● Voltmeter/ Ohmmeter ● Power supply 28 vdc
5.1.1.4 ● Safety/Rest Restraint	● Verify operation of safety/rest restraint	TBD		
5.1.1.5 ● Stabilizer Assembly	● Verify operation of stabilizer assembly	TBD		

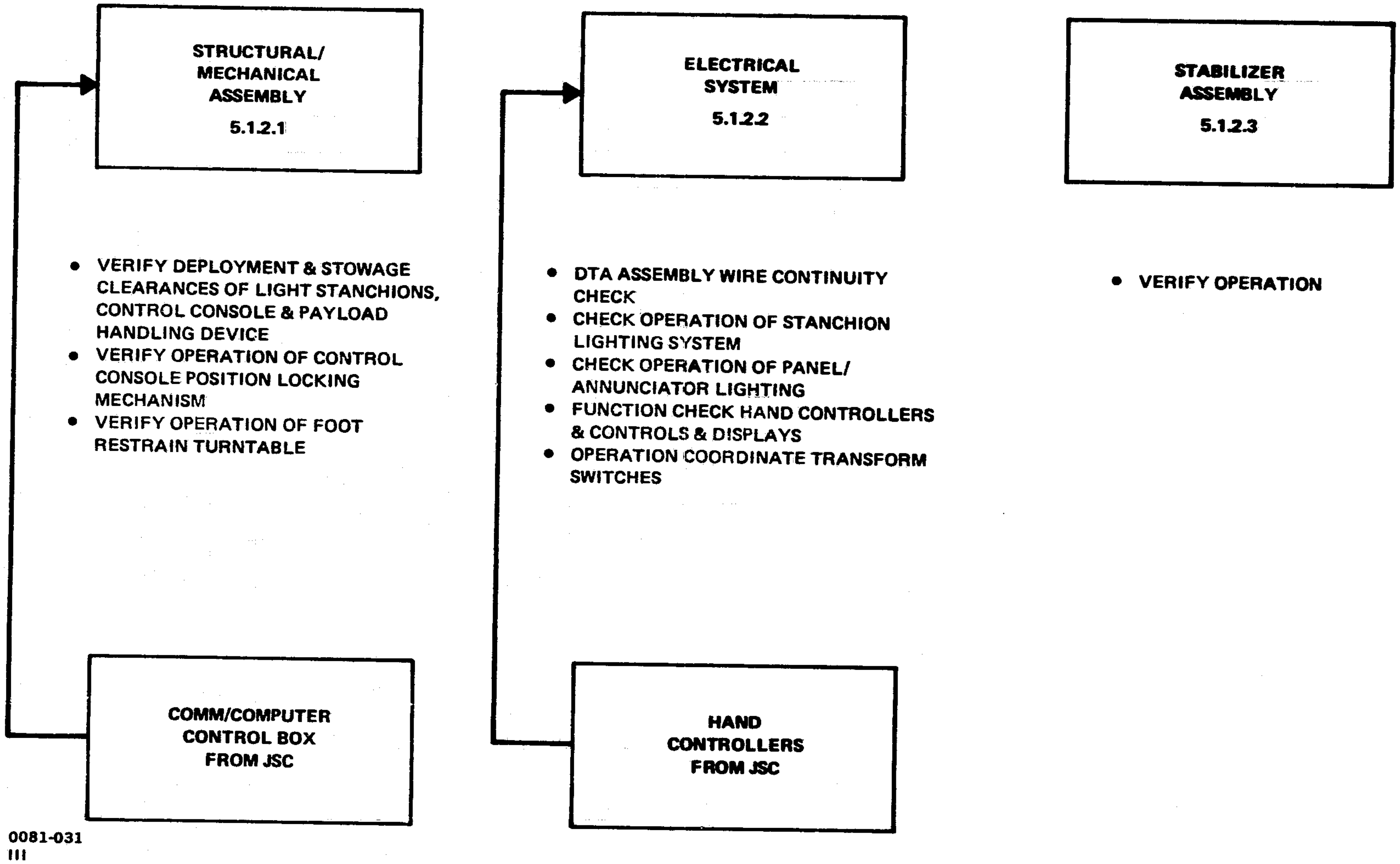

- VERIFY DEPLOYMENT & STOWAGE CLEARANCES OF LIGHT STANCHIONS, CONTROL CONSOLE & PAYLOAD HANDLING DEVICE
- VERIFY OPERATION OF CONTROL CONSOLE POSITION LOCKING MECHANISM
- VERIFY OPERATION OF FOOT RESTRAIN TURNTABLE

- DTA ASSEMBLY WIRE CONTINUITY CHECK
- CHECK OPERATION OF STANCHION LIGHTING SYSTEM
- CHECK OPERATION OF PANEL/ ANNUNCIATOR LIGHTING
- FUNCTION CHECK HAND CONTROLLERS & CONTROLS & DISPLAYS
- OPERATION COORDINATE TRANSFORM SWITCHES

- VERIFY OPERATION

5.1.2 DTA Assembly, Integration, and Checkout at Grumman

5.1.2 DTA Assembly, Integration and Checkout at Grumman

PARA	TEST REQMT	TEST PROCEDURE	TEST DATA & TOLERANCE	GSE EQUIP REQD
5.1.2.1 • Structural/ Mechanical Assembly	• Verify OCP-DTA deployment & folding	• Starting with the OCP-DTA in the fully deployed position & following the folding sequence outlined below, demonstrate that the OCP-DTA can be folded & latched together; there is adequate clearance between components & wiring is not crimped or subject to abrasion on any structure. All stow latches & locks shall operate easily. 1. Technician unlocks and retracts stabilizer to its stowed position and locks. 2. The tech lowers the lights on the telescoping tubes to their minimum height (locks them), rotates them to line up with the lower support frame & then telescopes them into their minimum width (locks them) 3. Tech lowers tool boxes from their upright positions to the off-line positions (insert pip pins) 4. Tech rotates payload handling devices swing arm to forward position and locks & then folds the pedestal down to its stowed position in the cradle actuator arm. 5. Tech now rotates foot restraint platform to forward position. 6. The light support frame is now unlocked (pull pip pins) & lowered forward to its stowed position over the foot restraint platform until it engages stops. 7. The C&D console is now unlocked, folded aft & latched in its stowed position, trapping the light stanchion support frame & the tool boxes.		
	• Verify operation of control console position locking mechanism	• Move lock handle up & rotate console fwd to each off-line position & lock. Console shall rotate freely & locks shall engage & disengage easily.	• Off-line positions from vertical $9^{\circ}, 9^{\circ}, 9^{\circ}$	

5.1.2 DTA Assembly, Integration and Checkout at Grumman (contd)

PARA	TEST REQMT	TEST PROCEDURE	TEST DATA & TOLERANCE	GSE EQUIP REQD
5.1.2.1 (contd)		• Move lock handle down & rotate console pedestal 45^{o}, release handle and check to see whether lock is engaged. Repeat for each locked position of the console at 90^{o}, 135^{o} & 180^{o} rotational positions. Lock shall engage & disengaged easily & console shall rotate freely.	• Console Pedestal lock positions 0^{o}, 45^{o}, 90^{o}, 120^{o} & 180^{o}	
	• Verify operation of foot restraint turntable assy	• Pull lock release cable & rotate foot restraint 45^{o} & release cable. Foot restraint assy should be locked. Repeat operation for every 45^{o} of rotation of foot restraint assy until foot restraint has rotate 360^{o}. The lock assy shall be engaged & disengaged easily & foot restraint shall rotate freely.	• Foot restraint turntable lock positions every 45^{o} for 0^{o} to 360^{o} rotation.	
5.1.2.2 • Electrical System	• Verify operation of electrical systems • DTA assembly wire continuity check	• Verify that OCP-DTA wiring is in accordance with Grumman Dwg No. C76-218, C76-219, C76-212. • Check that all connectors & terminal strips are identified correctly. • Check that all structural grounds are correctly made (all paint, anodize scraped off). • Check that all wires are configured, located, clamped & supported to eliminate any possibility of mechanical stress on wires, terminals & connectors or abrasion from adjacent structure.		• Ohmmeter
	• Check operation of stanchion lighting	• Verify operation of stanchion lighting system by applying power to connector at rear of OCP-DTA base module & operating light control switches on panel.		• 115 v 60 Hz ac power supply • 28 vdc power supply • Voltmeter/ ohmmeter.
	• Check operation of panel/annunciator lighting control	• Verify operation of annunciator lights intensity control switches. • Verify operation of panel lights intensity control switch.		

5.1.2 DTA Assembly, Integration and Checkout at Grumman (contd)

PARA	TEST REQMT	TEST PROCEDURE	TEST DATA & TOLERANCE	GSE EQUIP REQD
5.1.2.2 (contd)	• Check operation of hand controllers C&D console switches & annunciator lights	• Check operation of rotational hand controller & translational hand controller by applying power to connectors at rear of DTA base module & operating hand controllers & monitoring switch outputs on each axis.	• RHC Switch Activation Pitch – 0.16 in. Roll – 0.16 in. Yaw – 5.5 deg • THC Switch Activation X – 0.16 in. Y – 0.16 in. Z – 0.16 in.	
		• Verify operation of C&D panel switches, meters & display lights & flags by applying power to each circuit at the DTA base module connectors and monitoring outputs. (Grumman dwg no. C76-212 & C76-218).		
	• Check operation of coordinate transfer switches at console pedestal pivot axis	• Verify operation of coordinate transformation switches by rotating C&D console from 0° position to 90° & 180° positions & verifying that switches operate when activated by cam on console pedestal.	• These switches are installed on DTA but will not be implemented in the MDF	• Ohmmeter
5.1.2.3 • Stabilizer Assembly	• Verify operation of stabilizer assembly	TBD		

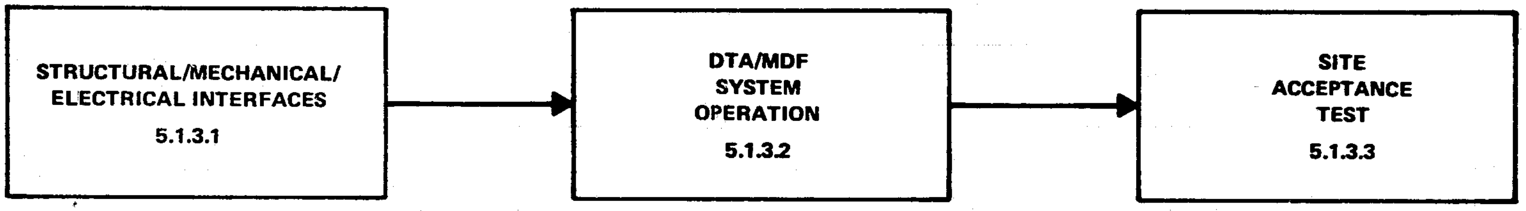

- STRUCTURAL INTERFACE VERIFICATION WITH AIR BEARING SLED
- VERIFICATION OF MECHANICAL INTERFACE WITH RMS-SNARE FITTING
- VERIFY C&R ELECTRICAL POWER/ COMMUN/SIGNALS INTERFACES

- FUNCTION CHECK OF RMS/MDF OCP-DTA OPERATION
- FUNCTION CHECK OF INTERCOM
- FUNCTION CHECK OF LIGHT SYSTEM
- FUNCTION CHECK OF OCP-DTA CONTROLS/DISPLAYS OPERATION

- PERFORM MMS MODULE REPLACEMENT MISSION

0081-032
III

5.1.3 DTA Integration and Checkout with MDF-JSC

5.1.3 DTA Integration and Checkout with MDF–JSC

PARA	TEST REQMT	TEST PROCEDURE	TEST DATA & TOLERANCE	GSE EQUIP REQD
5.1.3.1 ■ Structural/ Mechanical/ Electrical Interfaces	● Verify structural interface with air bearing sled	● Verify structural interface of OCP-DTA Base Module with the MDF air bearing sled. Check fit of interface DTA fittings with sled pickup structure & drill bolt holes in air bearing structure using holes in DTA fittings as template. Install bolts & torque nuts. ● Float air bearing sled & move over air bearing floor to check air bearing operation.		● Torque wrench
	● Verify structural interface with RMS snare fitting	● Verify structural interface of grapple fitting with OCP-DTA base module. Mount grapple fitting to DTA base module & check the alignment of bolt hole pattern. Insert bolts & torque nuts & verify grapple fitting is securely mounted to DTA. Float air bearing sled & capture grapple fitting with snare-type end effector mounted to MDF-RMS arm. Verify that DTA is securely captured & tied to RMS & that no part of the DTA interferes with the snare during the capturing sequence.		● Torque wrench
	● Verify C&R Elec. pwr/intercom/signal interfaces	● Verify that electrical power, communication & signal DTA/MDF interface wiring is in accordance with Grumman dwg no. C76-218 & JSC dwg no. TBD. ● Assure that all connectors and terminal strips are identified correctly & are legoble. ● Verify that all interface mating connectors are compatable. ● Assure that all structural grounds are made properly. ● After interfaces have been verified, mate all connections between OCP-DTA & facility.		● Ohmmeter

5.1.3 DTA Integration and Checkout with MDF-JSC (contd)

PARA	TEST REQMT	TEST PROCEDURE	TEST DATA & TOLERANCE	GSE EQUIP REQD
5.1.3.2 • DTA/MDF System Operation	• Functional check of RMS/MDF-DTA operation	• Activate air bearing sled air supply system & float DTA. Activate MDF-RMS system. • Select the proper mode control switch to allow the DTA operator to control the RMS by use of the DTA hand controllers. • Moving each hand controller about its axes of rotational & translational control, ensure that the corresponding motions of the RMS are along the RMS coordinate axes selected & are in phase. When the hand controller is moved against its stop, it commands the RMS to drive at its maximum rate, when the vernier/coarse rate switch on the C&D panel is in the coarse position. With the switch in the vernier position, the hand controller drives the RMS at its maximum vernier speed. By depressing the rate hold switch on the rotational hand controller grip, the RMS is driven at a constant rate until the switch is repressed. • Select the proper mode control switch to allow the DTA operator to control the RMS on a joint-to-joint basis by use of the joint selection switch & the single/direct drive switch. • Operate each joint selected, by use of the single/direct toggle switch in both the plus & minus directions. Check that the joint selected on the rotary switch is the one being driven & the direction of joint motion is in phase with the plus & minus directions on the direct drive toggle switch.	• Max rate RMS tip, 2 ft/sec	• Tape measure • Stop watch
	• Functional check of intercom system	• Plug a headset with press to talk switch into headset plug in C&D panel GFE box & turn on volume control switch. • Check whether the DTA operator can communicate with test director & computer console operator & that the transmissions are clear & free of background static & noise.		

5.1.3 DTA Integration and Checkout with MDF–JSC (contd)

PARA	TEST REQMT	TEST PROCEDURE	TEST DATA & TOLERANCE	GSE EQUIP REQD
5.1.3.2 (contd)	• Functional check of lighting system	• Turn on each stanchion light one at a time by switches on C&D panel (A4, A5, A6). Rotate intensity control switch and check whether intensity of the light varies. • Turn on all control panel annunciator lights, digital indicators, & master alarm light. Move annunciator brightness select switch (S-2) to bright; all annuciators lights should be at maximum fixed level. Move switch to variable position & check that annunciator lights intensity varies as the rotary control switch (R-1) is rotated from low to medium. • Rotate panel lighting adjust switch (R-2) on control panel & check whether analog meter, panel nomenclature & electromechanical flag brightness varied as switch is rotated.		
	• Functional check of OCP-DTA controls/display	• Verify operation of the following controls & displays located on the C&D panel: – MODE SELECTION SWITCH (S-10) Select each mode on the 12-position rotary switch & press enter switch (S-9) after selection of mode to enter into the computer. Each corresponding mode light should go on when mode is entered in computer (DSI & DSIO). Mode Positions: Test, OPR CMD, Auto 1, 2, 3, & 4 place the computer in idle mode. Mode Position: ORB, End Effect, MIX & P/L select Manual Aug. Mode & various Coor. Ref Systems. Mode Position: Single & direct select operation of RMS on joint-by-joint basis. – AUTO SEQ PROCEED/STOP SWITCH (S-3) This switch is enabled in the computer only when OPR CMD, Auto 1, 2, 3, & 4 are selected on mode switch (S-10). Move switch to proceed & annunciator light IN PROG lites up. Move switch to stop position & IN PROG annunciator (DS3) goes off & READY goes on.		

5.1.3 DTA Integration and Checkout with MDF-JSC (contd)

PARA	TEST REQMT	TEST PROCEDURE	TEST DATA & TOLERANCE	GSE EQUIP REQD
5.1.3.2 (contd)		● Rate Hold Switch (On Rotational Hand Controller) Depress switch on RHC & RMS is in rate hold mode. Electromech flag (DS8) indicates "on". Depress switch again & rate hold is off. Electmech flag (DS8) indicates "off". – SAFEING START/AUTO/CANCEL SWITCH (S-7) Move switch to maintained up "safe" position. Electromech flag (DS2) should indicate barber pole. Move switch to cancel position, electmech flag indicates blank. – BRAKES ON/OFF SWITCH (S-6) Move switch to ON position & all RMS joint brakes are applied. Electmech flag (DS4) indicates "on". Move switch to OFF position to release RMS joint brakes. Electmech flag indicates "off". – VERNIER/COARSE SELECT SWITCH (S-5) Move switch to coarse position & RMS is in max vel mode. Electmech flag (DS-7) indicates "off". Move switch to vernier position puts RMS in min vel mode. Electmech flag indicates "on". – HIGH/MEDIUM/LOW RATE SWITCH (S-4) Moving the switch to either of the three positions allows the operator to change the max rate of the RMS. Elect mech flag (DS-9) should indicate high, medium or low corresponding to switch position. – JOINT SELECT SWITCH (S-12) Eight-position switch allows operator to select individual joint to be driven when mode selection switch (S-10) is in the single or direct position.		

5.1.3 DTA Integration and Checkout with MDF–JSC (contd)

PARA	TEST REQMT	TEST PROCEDURE	TEST DATA & TOLERANCE	GSE EQUIP REQD
5.1.3.2 (contd)		– SINGLE/DIRECT DRIVE SWITCH (S-13) By moving switch in the + or – direction, individual joints selected by joint selection switch (S-12) can be driven. In the Direct Mode, actuation of the switch releases the brake in the selected joint & drives the joint. In the Single Mode, actuation of the switch drives the selected joint under computer control. Check that the plus & minus directions of the individual joints agree with the directions commanded by RMS operators consoles switch. – RMS PWR PRIMARY/SECONDARY SWITCH (S-15) Turn switch to either primary of secondary position & ensure pwr is on to RMS. Return to center-off position & RMS pwr should be off. – MRWS PWR ON/OFF SWITCH (S-14) In the ON position, pwr is applied to the MRWS & in the OFF position, pwr is turned off. – SOFTWARE STOP INDICATOR (DS-6) Electromech flag indicates barberpole, computer has commanded a software stop & brought RMS arm to rest. A blank in indicator means a stop has not beem commanded. – MASTER ALARM LIGHT AND SWITCH (S-9) Master alarm lights when any of the Caution and Annunciator lights (DS-2) go on. Simultaneously a tone goes on. Both are cancelled by pressing switch. – CAUTION & WARNING ANNUNCIATORS (DS-2) Each annunciator lights when the following conditions exist: Singular – Indicates RMS arm is approaching an arm singularity condition CONT ERR – Indicates joint abnormal condition not detected by BITE		

5.1.3 DTA Integration and Checkout with MDF-JSC (contd)

PARA	TEST REQMT	TEST PROCEDURE	TEST DATA & TOLERANCE	GSE EQUIP REQD
5.1.3.2 (contd)		CHECK CRT — Failure message available on Orbiter CRT REACH LIM — Indicates one of the RMS joints is close to its reach limit MCIU — Failure in MCIU ABE — Failure in ABE GPC DATA — Failure in GPC or GPC to MCIU data communications. This warning accompanied by execution of RMS safeing routine Derigidize — End effector to payload grapple point has been derigidized without command from operator Release — End effector has released payload grapple without command from operator — NUMERICAL READOUT (A-1, A-2, A-3) & PARAMETER SELECTION SWITCH (S-11) Use of the parameter switch enables operator to select parameters to be displayed on the three digital indicators. Test — Will indicate + 8.8.8.8 on each indicator & activate all annunciator lights. Position — Shows position of end effector XYZ in inches relative to Orbiter structural body coordinate system. Attitude — Shows Pitch, YAW, Roll angles of the end effector relative to Orbiter structural body coordinate system. Joint Angle — When joint angle selected, indicator A-3 shows joint angle selected by switch S-12 in range +180 to −180 deg		

5.1.3 DTA Integration and Checkout with MDF–JSC (contd)

PARA	TEST REQMT	TEST PROCEDURE	TEST DATA & TOLERANCE	GSE EQUIP REQD
5.1.3.2 (contd)		– UTILITY PWR SWITCH (S1) Turn switch to ON position, pwr available at utility pwr connector (J-1) – COMPUTER CONTROL SUB PANEL (GFE) Press computer RUN switch to activate computer & FREEZE button to put computer in hold mode. Press manip RUN button to activate RMS hydraulic pwr supply, STOP to shut down system. All switches have annunciators lights to indicate the mode of operation selected.		

5.1.3.3 Site Acceptance Test - The purpose of the site acceptance test is to demonstrate that the OCP-DTA is ready for the simulation development test phase. The test will consist of the OCP performing a typical satellite servicing mission of replacing a MMS module which will demonstrate the performance and the operational capabilities of the OCP-DTA.

Test Setup

The test will be performed at the MDF at JSC in Building 9A. The OCP-DTA will be mounted on the air bearing sled and will be attached to the MDF-RMS snare-type end effector. A test article, which is a dimensionally true mockup of the MMS subsystem module support structure, will be located on the air bearing floor. Obstacles will be placed between the initial starting point of the OCP and the MMS mockup, so that the OCP operator must maneuver the OCP around the obstacles when he translates to the MMS mockup. Two dimensionally true, lightweight mockups of the MMS module are required. The test setup is shown in Figure 29 and the test article mockups in Figure 30. A mockup of the MMS module replacement tool (Figure 31) is required and is stowed in the OCP tool box.

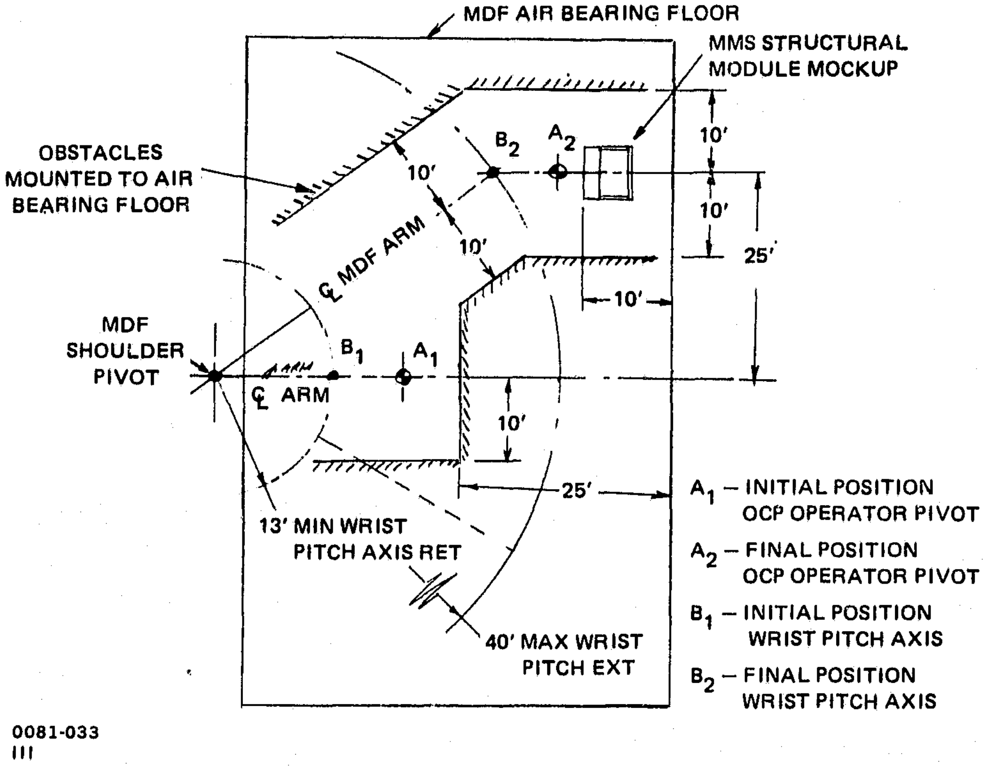

Figure 29. MDF Acceptance Test Setup

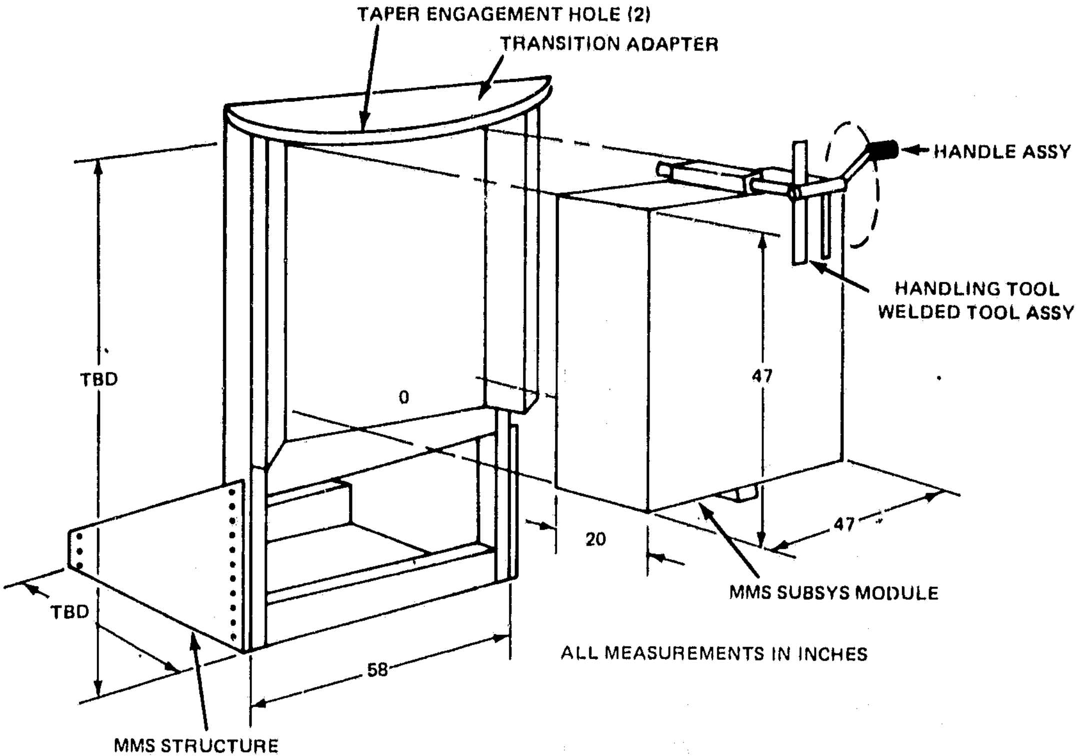

0081-034
III

Figure 30. MMS Module Replacement

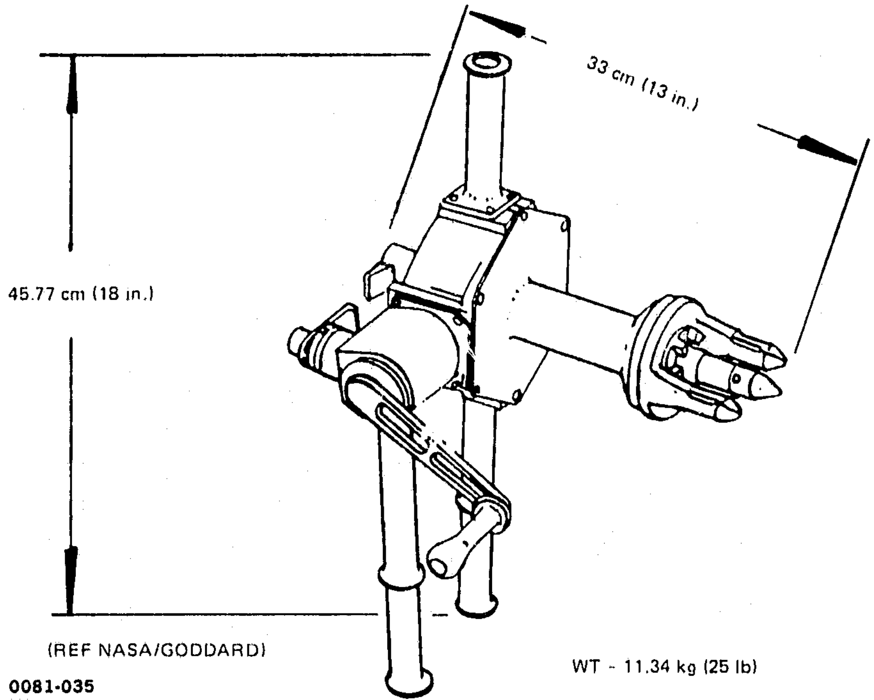

0081-035
III

Figure 31. EVA Tool – MMS Subsystem Module Replacement

The OCP-DTA operator will perform the test donned in an EMU suit with oxygen and coolant lines attached to the backpack. One MMS mockup module will be mounted in the RH PHD and the other on the MMS module support structure mockup.

Test Procedure

The OCP is in its fully deployed configuration and the computer and MDF-RMS are operational (consult JSC 10881 for detail procedures). Pretest checkout is performed on the OCP C&D panel to ensure all systems are functioning. Before the performance of the official test, a dry run or walk thru of the test is performed with the operator in shirtsleeves to familiarize him with the test procedures. When the test director decides the operator has familiarized himself with the test procedures, the operator dons the EMU suit and begins the test.

- Operator Ingresses OCP
    - Operator places boots in foot restraints and technician fastens safety/rest restraint to EMU backpack
    - Technician adjusts vertical height of C&D pedestal and adjusts orientation of hand controllers to suit operator
    - Operator checks out rotation of C&D pedestal and foot restraint platform
- OCP Translates to Work-Site
    - Operator selects hand controller manual augmented mode of RMS control and end effector coordinate system on C&D panel
    - Operator selects coarse max rate and presses computer run button
    - Using hand controllers and varying the max rate by use of the low/medium/ high switch, operator translates the OCP around the obstacles to the work-site, operator uses rate hold switch on RHC where possible
    - In the vicinity of the work-site operator switches max rate switch to vernier and positions OCP adjacent to MMS mockup
    - Operator disengages control of the RMS from the OCP by applying RMS joint brakes
    - Operator turns on lights and adjusts stanchions

- MMS Module Replacement
  - Operators moves C&D pedestal to off line, 120° position
  - Operator moves left-hand (LH) PHD to front position and adjust vertical height of bottom clamp until it just below MMS module bottom
  - Operator pivots about on work platform and removes MMS tool from tool bin and rotates to forward position
  - Operator simulates using tool to remove upper module fastener
  - Operator replaces tool in tool bin
  - Operator grabs hand holds on MMS module and pulls toward him at least 15 in. and places module in PHD engaging pin in lower PHD clamp
  - Operator then lowers upper PHD clamp until pin in upper clamp engages hole in top of module
  - Operator then swings LH PHD to its 90° off-line position
  - Operator reverses above procedure and installs module on right-hand (RH) PHD into MMS structural mockup
- OCP Translates Back to Start Position
  - Operators turns off lights and returns stanchions to upright position
  - Tool is stowed in tool bin and tool bin is rotated to off line position
  - C&D console is moved to its aft position
  - Operator engages control of the RMS from the OCP
  - Operator selects direct control of RMS and end effector coordinate system on C&D panel
  - Operator presses computer run button and controls OCP around obstacles back to starting point by use of direct drive joint switches
  - When at starting point operator presses computer freeze button and deactivates air bearing, computer, and RMS.

Data Requirements

Video tape test, utilizing camera located on RMS arm and fixed cameras located on air bearing floor in vicinity of MMS mockup. Field of view should be sufficient to show complete range of motion of the OCP on the air bearing floor, and zoom lens utilized for close-up views.

A debriefing shall be held after test to solicite operators comments about the operation and performance of the OCP-DTA and to discuss any discrepancies raised by JSC personnel.

5.2 SIMULATION TEST PLAN

The simulation plan and the simulation support plan will be the guideline documents used to support OCP/MDF simulation testing. Figure 32 defines the task matrix from mission objectives/requirements, through final report presentation of results. The simulation plan defines the test objectives/requirements in the form of a test matrix. A test request defines the test schedule, configuration, and resources necessary to complete the test planning function. Prior to test conduct detailed test procedures will be developed for each test. Finally a test report will summarize the test results.

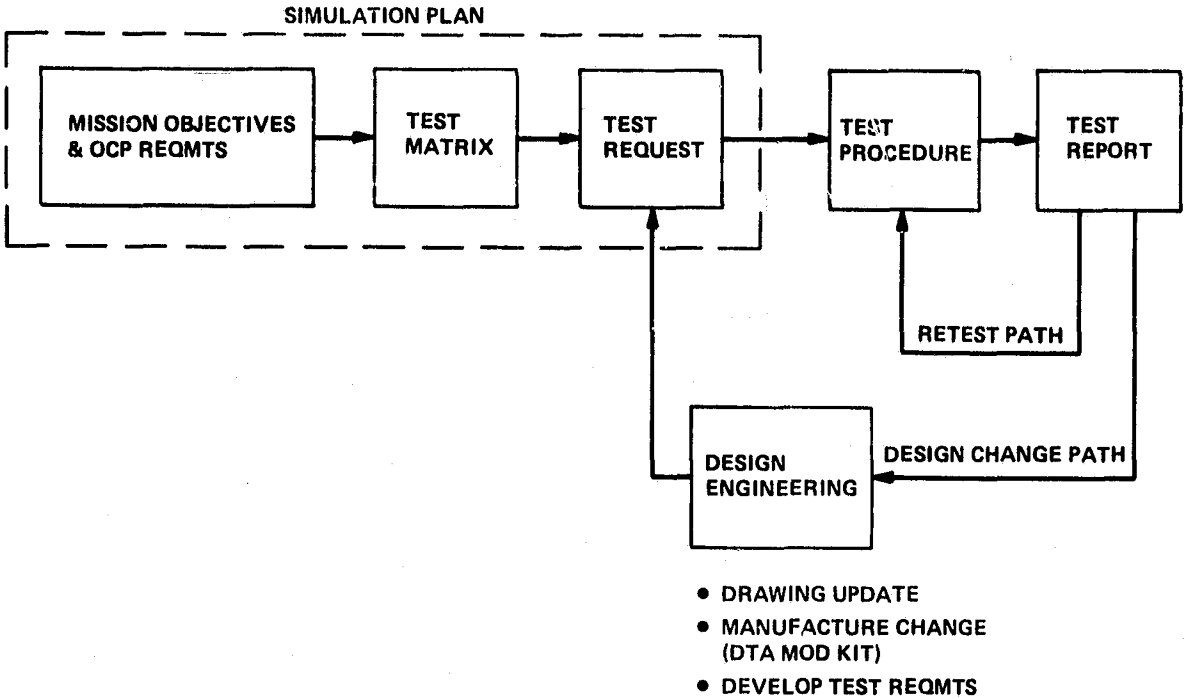

Figure 32. Test Task Flow

Subsection 5.3 presents a 24-month test planning schedule. Paragraph 5.2.1 defines the test matrix and Paragraph 5.2.2 defines the test requests.

The OCP mission objectives and performance requirements have been analyzed and a detailed test matrix developed for OCP simulation events. The test matrix represents a detailed test road map listing all possible areas of study. It in essence represents the maximum the test plan will grow to. For example, the stabilizer matrix includes testing mechanical, electromechanical, and hybrid stabilizers. The intent is to study the mechanical stabilizer first and, if it adequately solves the problem, the electromechanical and hybrid stabilizers may not be tested.

The simulation plan test requests substantiate the need for test, with traceability to the OCP objectives/requirements. It also establishes all the necessary elements to perform the test planning function. It establishes the test objective, test configuration, test article requirements, support equipment requirements, and the test schedule.

The test request is the only way a test sponsor can enter the test program. This restriction will ensure that the test planning function that allocates resources is an on-going function during the test program. Only a test request can generate the requirements for a test procedure. The test sponsor will also be an active participant in generating the test procedure and test final report.

Testing starts with integration and check out of the OCP/MDF elements and progresses to the design development tests, the Satellite servicing tests, and finally the construction task tests. The simulation support plan will define the day-to-day operations including: checkout, testing, maintenance, training, and simulation modifications.

The primary outputs of the simulation test program will be summarized during periodic design reviews during testing and finalized with a detailed test report two months after the completion of each test series.

5.2.1 Test Matrix

SIMULATION EVENT	OBJECTIVE	COMMENTS/DESCRIPTION
1.0 OCP Design Development		
1.1 RMS Flt Control System	Develop an RMS Flt Control System for following mission phases: • Transport to Work Station • Fine align at Work Station • Stationkeeping at Work Station.	The requirements of control dexterity are different for each mission phase & may dictate a unique solution.
1.1.1 RMS Control Law	Develop a Control Law for Flt Control and include evaluations of: • Resolved Rate • Rate Hold • Position Hold.	Testing will be conducted without a stabilizer & with a simple RMS dynamics model for perturbed platform motions.
1.1.2 Coordinate Ref Sys for Command Control	Develop a Coordinate Ref Sys for Command Control: • STS Operator Coordinate Ref • STS Cargo Bay Coordinate Ref • RMS End Effector Coordinate Ref • OCP Coordinate Ref (Foot Restraint Center Line) • Payload Coordinate Ref.	Because Command Control is based on "Fly To" actuation of the controller, the reference point of motion is an important consideration.
1.1.3 Command Control	Develop a Command Control Design. Evaluate 6-DOF hand controllers & single-axis controllers for both discrete & proportional control.	Evaluate MMU, Space Transportation System (STS) RMS Single Axis, & Grumman fly panel controllers. All controllers will be "Fly To."
1.1.4 C&D Flt Control	Develop Flt C&D panel design in support of the following functions: • Power Up/Down • Mode Control • Rate Selection • System Safing/Brakes • System Monitoring.	System safing must include a method of safing the OCP C&D during a work cycle. The design should consider incorporation of switch guards.
1.1.5 Flt Control Procedure	Develop a Flt Control procedure & include contingency operations to cover an OCP/RMS malfunction.	Use of the STS operator to cover contingencies will be studied.
1.2 C&D Support Function	Develop C&D Mission Support Functions Panel design: • Lighting Control (Work-site, C&D Panel) • Utility Tool Pwr Control • Stabilizer Control • Electromechanism Control • Closed Circuit Television (CCTV) • Other.	Each of these functions are subject to further definition & are included in the test matrix for planning purposes to scope the test job.

5.2.1 Test Matrix (contd)

SIMULATION EVENT	OBJECTIVE	COMMENTS/DESCRIPTION
1.0 OCP Design Development (contd)		
1.3 Stabilizer	Develop a Stabilizer to off-load work-induced loads at the OCP/RMS to Test Article Interface: • Mechanical • Electromechanical • Hybrid.	The structure stiffness & low-torque motor joints of the RMS will produce unwanted work platform (OCP) motions at comparatively low levels of induced force (≈ 15-50 lb). The plan is to develop a grappler to structurally unite the OCP and Test Article during a work cycle.
1.4 Structural/Mechanical	Evaluate design concept of structural/ mechanical subsystem elements to performances spec: • Tool Bins • Light Stanchions • Restraint System (Foot, Handholds, body) • Payload Handling Device • C&D Console.	A more effective evaluation will occur during satellite servicing & further WIF tests. The development tests will evaluate the performance specification.

5.2.1 Test Matrix (contd)

SIMULATION EVENT	OBJECTIVE	COMMENTS/DESCRIPTION
2.0 Satellite Servicing	• Evaluate man-machine interface • Develop servicing procedure & timelines • Establish stabilizer grapple points • Develop reqmts of OCP to support the mission: – Tool Bin Config – Payload Handling Device Config – Lighting Sys Config – Mission Peculiar Support Equipment.	
2.1 Multi-Mission Spacecraft	Evaluate OCP servicing/replacement of MMS Modules: • Power Module • ACS Module • C&DH Module • Propulsion Module.	The MMS is used as a bus for NASA satellites & as such is a basic building block for other satellites that will be studied.
2.2 Long Duration Exposure Facility (LDEF)	Evaluate OCP servicing/replacement of experiment trays. Evaluate OCP inspection & data collection at experiment trays.	The LDEF is unique in that its work approach angles will test the dexterity of the OCP.
2.3 Solar Max	Evaluate OCP servicing/replacement of: • Remove & stow Solar Arrays (1st SMM) • Remove & stow Antenna (1st SMM) • Subsys Modules (2nd SMM) • Recalibrate Instr.	The Solar Max will test the ability to service optical instruments & solar arrays. It will also demonstrate the ability to salvage components from a spent satellite.
2.4 Gamma Ray	Evaluate OCP servicing/replacement of: • Exchange Experiment Pkg – Gamma Ray Detector – Imaging Compton Telescope • Recover Solar Panels • Replace MMS Modules if used • Resupply Cryogenics (currently supplied for 2 yr) • Calibrate & Check Out Instr.	The Gamma Ray will test the ability to replenish cryogenics.
2.5 Space Telescope	Evaluate OCP servicing/replacement of: • Replace – Support Sys Modules – Scientific Instr • Contingency Replace – Hi Gain Antenna – Aperature Door – Solar Array • Calibrate & Tune Optics.	The Space Telescope will test a lower level of maintenance. Subsystem components will be serviced. The containment of EMU wastes is a key technical problem during servicing.

5.2.1 Test Matrix (contd)

SIMULATION EVENT	OBJECTIVE	COMMENTS/DESCRIPTION
3.0 Space Construction from STS Cargo Bay	Evaluate man-machine interface Develop work procedures & timelines Develop monitor/checkout Instruments Develop support equipment reqmts	The study of generic construction work tasks are planned rather then a specific construction program. This will entail in-depth studies of all types of beam joints (nodal, lap & spliced), cable & panel fasteners, tensioning devices, tube & cable runs. To this end a universal Beam Test Article will be designed to act as a Component Test Bed.
3.1 Beam/Truss/Tension Cable or Tapes	Evaluate installation & checkout of subassemblies containing beams, truss & tension cables/tapes.	
3.2 Panels, Solar Blankets, Solar Arrays	Evaluate installation & checkout of subassemblies containing panels/solar blankets/ solar arrays.	
3.2 Electrical Cable/Bus, Microwave Guides, Fluid/Gas Lines	Evaluate installation & checkout of subassemblies containing electrical cable/bus, microwave guides, fluid/gas lines.	
3.4 Hardware Components, Subsystems	Evaluate installation & checkout of subassemblies containing hardware components.	

5.2.2 Test Requests

Simulation Event: 1.1 RMS Flight Control System

Objectives: Develop the OCP/RMS Flight Control System for transport to work station, fine align at the work station, and stationkeeping at work station. The design is to include the following elements:

- Control Laws
  - Resolved Rate
  - Rate Hold
  - Position Hold
- Coordinate Reference System
  - STS Operator
  - STS Cargo Bay
  - RMS End Effector
  - OCP Foot Restraint
  - Payload
- Command Control
  - MMU Hand Controllers (6 DOF)
  - STS Single-Axis Joint Controller
  - Grumman Fly Panel Controller (6 DOF)
  - Proportional Controller (6 DOF)
- Controls and Displays
  - CDR Baseline Design
- Flight Control Procedure
  - OCP Autonomous Control
  - STS Operator Contingency Backup.

Test Configuration: MSS Servicing Scenario

- OCP-DTA
  - CDR Baseline Design
  - Hand Controllers and Fly Panel Controllers

- MDF
  - CDR Baseline Design with the following mods
    - o Simplified RMS Dynamics
    - o Position Hold Control Law
    - o OCP Foot Restraint Coordinate Reference Matrix
    - o Payload Coordinate Reference Matrix
    - o Test Article Motion Equation (±Z, ±0, ±Ø) (This software will be referred to as version 01).

<u>Mockup Requirements:</u>

- Lightweight Structure
- Support Structure Designed for Z Axis Motion.

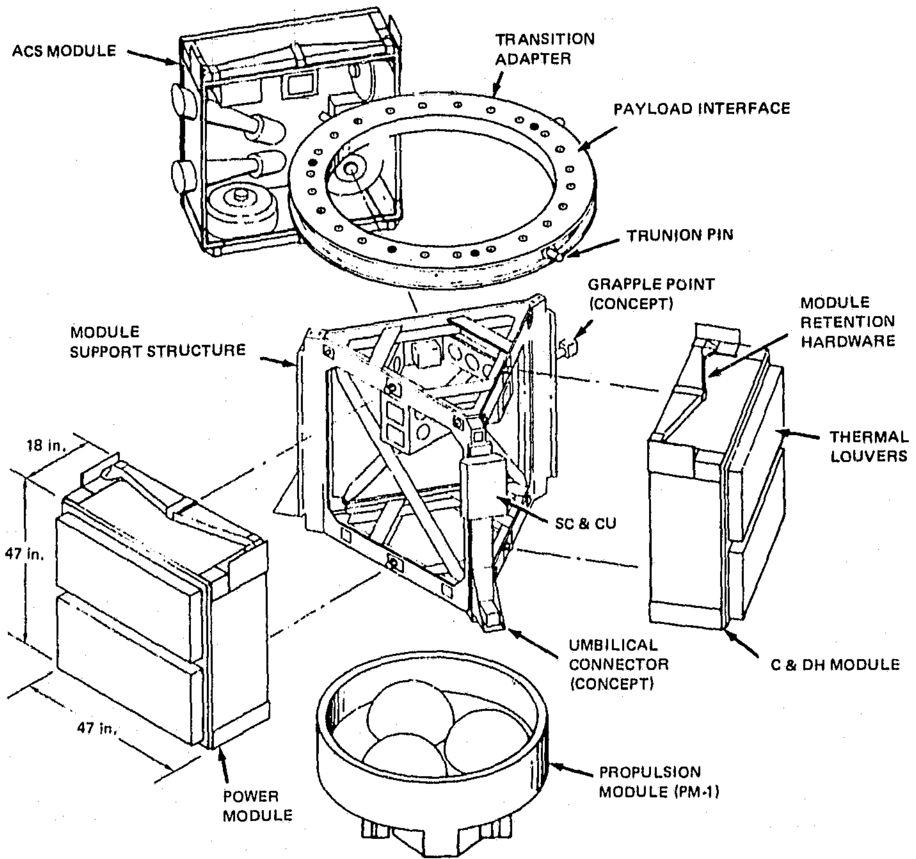

0081-037
III

Mission Peculiar Equipment Requirements (Ref Figure 33)

- Payload Handling Fixture Device (MMS)
- Tool Holding Fixture
- MMS Module Removal/Tool
- Flight Support System Modified for MDF Air Bearing Use

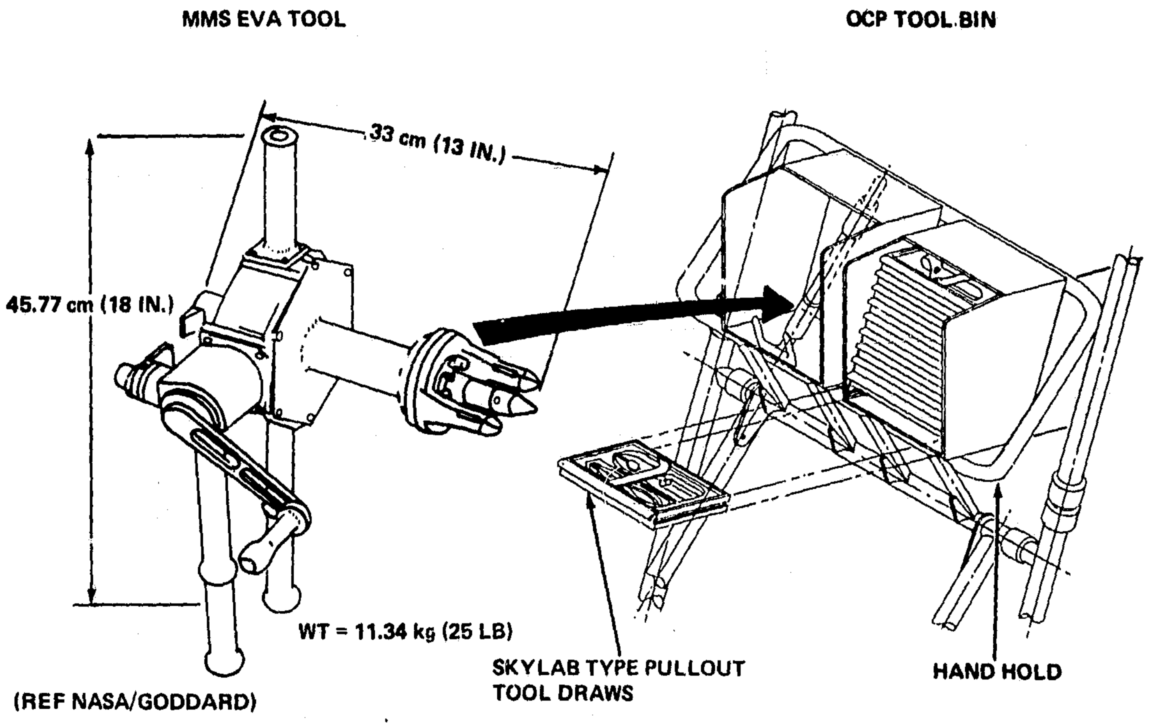

0081-038
III

Figure 33. MMS EVA Replacement Tool

Schedule:

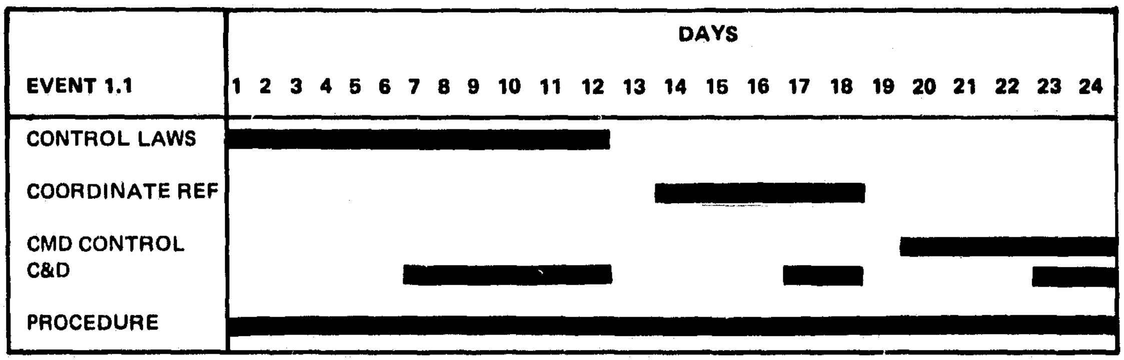

0081-039
III

Simulation Event: 1.2 C&D Support Functions

Objectives: Develop the C&D subsystem design of MRWS Support functions, including:

- Lighting Control
- Utility Power Control
- Stabilizer Control
- Electromechanical Mechanism Control
- CCTV Control
- C&D Panel and Hand Controller Safing during Work Cycle.

Test Configuration:

- OCP-DTA
  - CDR Baseline
  - Design Modification Kits (as necessary)
- MDF
  - Baseline Software Package, Version 01
- Test Article
  - MMS Module
  - Optical Targets.

Test Article Requirements:

Optical targets capable of evaluating lighting and CCTV will be required.

Support Equipment Requirements: TBD

Schedule:

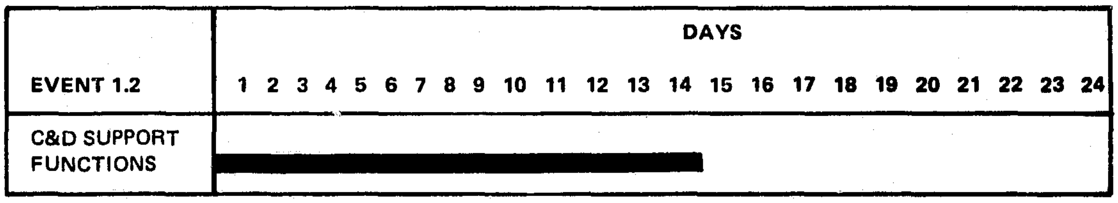

0081-040
III

Simulation Event: 1.3 Stabilizer

Objectives: Develop a stabilizer to grapple the work-site and rigidize the work platform to reduce the loads on the STS-RMS. The design is to include the following elements:

- Control Law and Coordinate Reference System
- Command Control and Displays
- Flight Control Procedure.

Test Configuration:

- OCP-DTA
  - CDR Baseline Design
  - Stabilizer Hardware (Ref Figure 13)
  - Stabilizer C&D Mod
  - Stabilizer Controller
- MDF
  - Baseline Software Version 01
  - RMS Dynamics (X, Y, Z Axis Relative Motion)
  - Stabilizer Software
- Test Article
  - MMS Mockup
  - 3-DOF Relative Motion.

Test Article Requirements:

Because the RMS dynamics create the need for stabilization, the test article will require motion in the Z axis to simulate the dynamic environment.

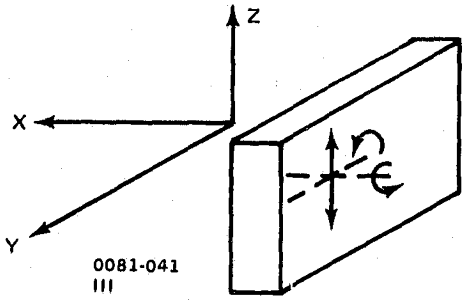

Support Equipment Requirements:

- MMS Module Removal Tool (Refer to Simulation Event 1.1).

Schedule:

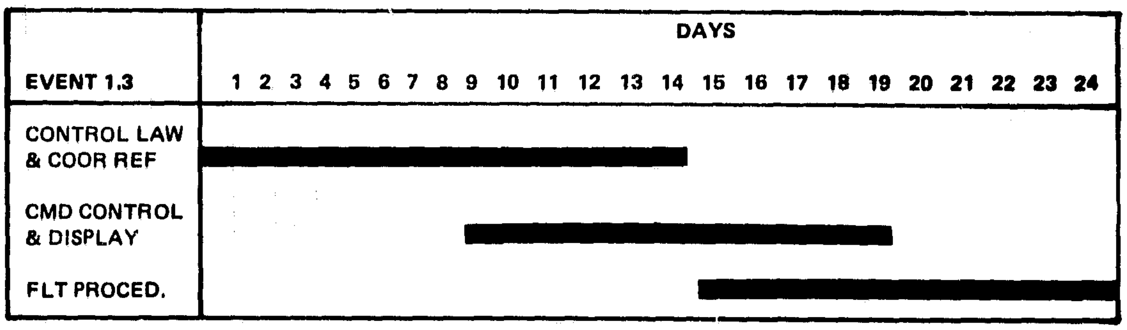

0081-042
III

Simulation Event: 1.4 Structural/Mechanical

Objectives: Evaluate the performance of the structural/mechanical subsystems to meet mission operations requirements. Develop manual/auto mechanism for structural element adjustments (i.e., lighting).

Test Configuration:

- OCP-DTA
  - CDR Baseline
  - Special Design Modification Kits
- MDF
  - Baseline Software Version 01
- Test Article
  - MMS Module
  - Special Purpose Articles (TBD at this time).

Test Article Requirements:

Provide a functional simulation of the operational environment.

Support Equipment Requirements: TBD

Schedule:

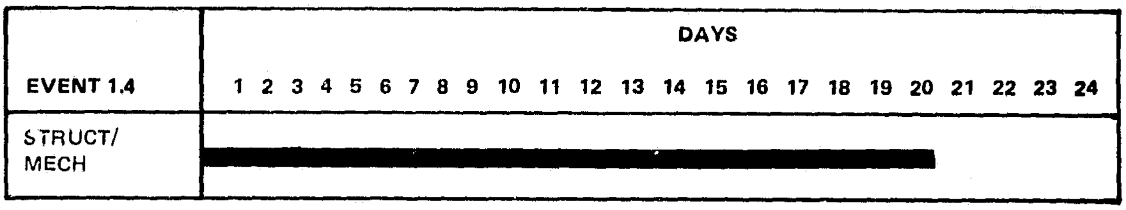

0081-043
III

Simulation Event: 2.1 MMS Servicing

Objectives:

- Evaluate Man-Machine interface
- Develop Servicing Procedure and Time Lines
- Establish Stabilizer Grapple Points
- Develop Requirements for OCP to Support Mission
  - Tool Bin
  - Payload Handling Device
  - Lighting System
  - Mission Peculiar Support Equipment.

Mockup Requirements:

- Lightweight Structure
- Support Structure Designed for Z Axis Motion.

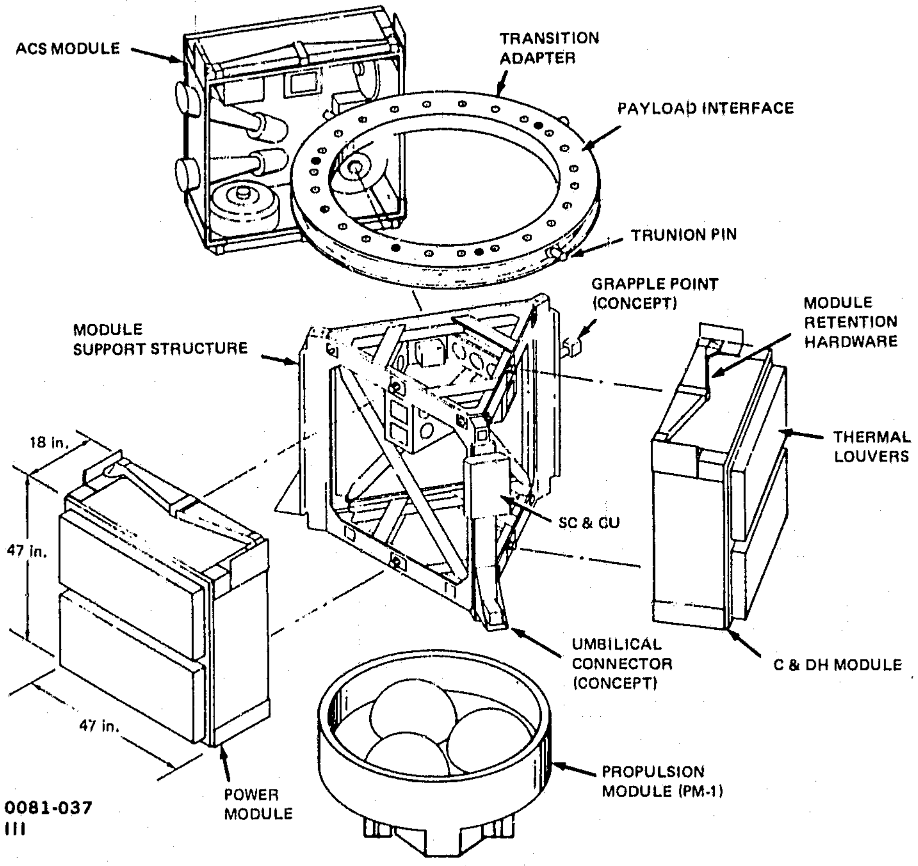

Mission Peculiar Equipment Requirements (Ref Figure 33, p. 73, and 34)

- Payload Handling Fixture Device (MMS)
- Tool Holding Fixture
- MMS Module Removal/Tool
- Flight Support System Modified for MDF Air Bearing Use

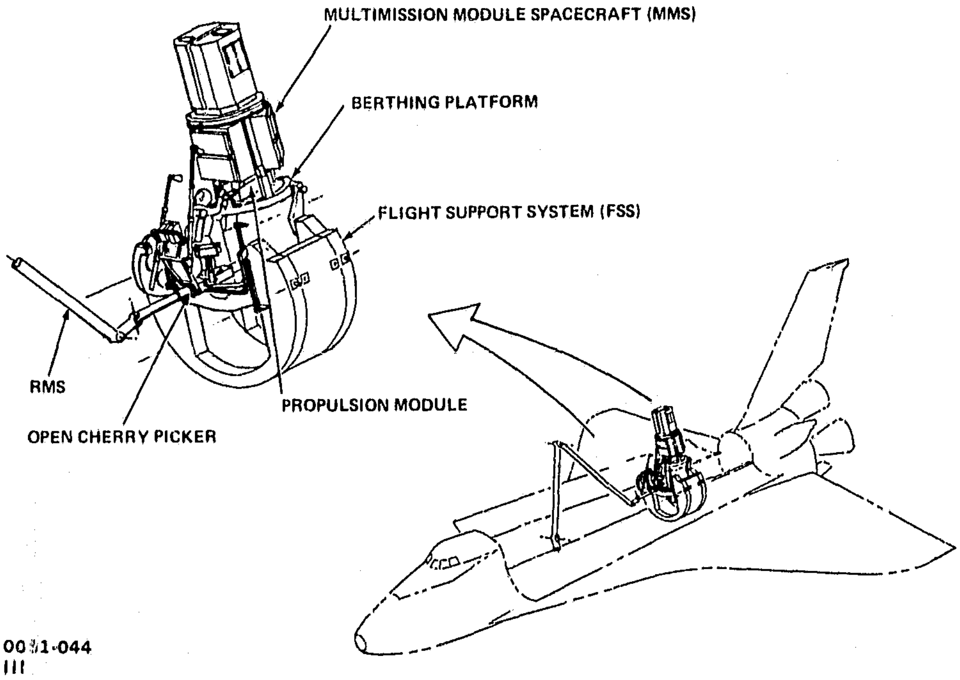

Figure 34. MMS Propulsion Module Replacement

Simulation Configuration:

- Baseline OCP and MDF
- Z axis Motion Required for Up/Down Motion of Target
- Force Reflection System Needed to Simulate RMS Backdrive.

Schedule:

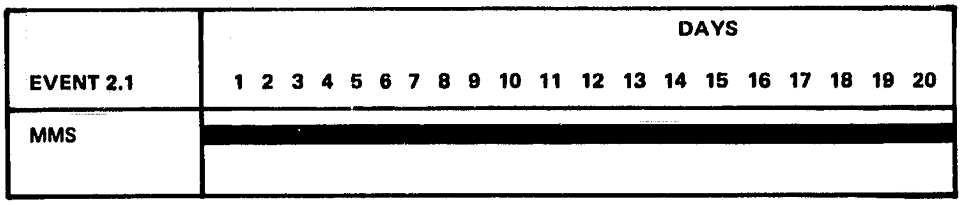

0081-045
III

Simulation Event: 2.2 LDEF Servicing

Objectives:

- Evaluate Man-Machine Interface
- Develop Servicing Procedure and Time Lines
- Establish Stabilizer Grapple Points
- Develop Requirements for OCP to Support Mission
  - Tool Bin
  - Payload Handling Device
  - Lighting System
  - Mission Peculiar Support Equipment.

Mockup Requirements:

- Lightweight structure
- LDEF and Tray Carousel Designed to Rotate
- Designed for Z Axis Motion.

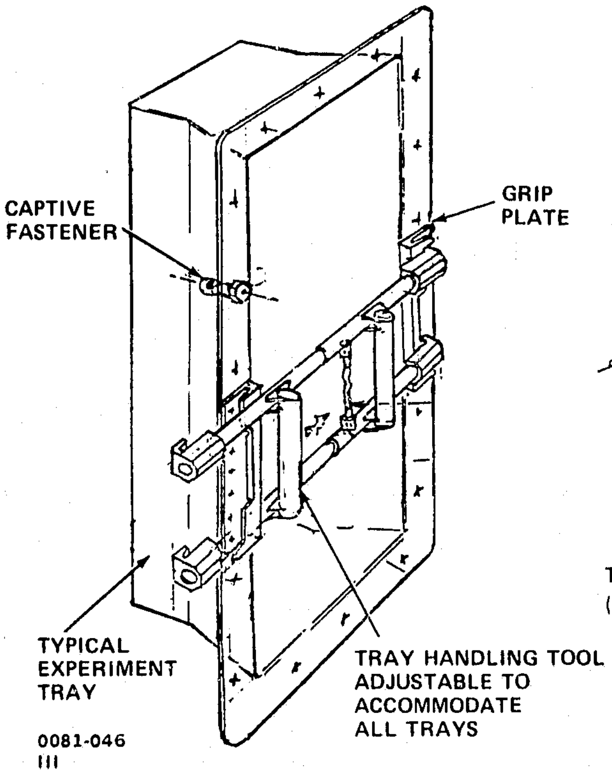

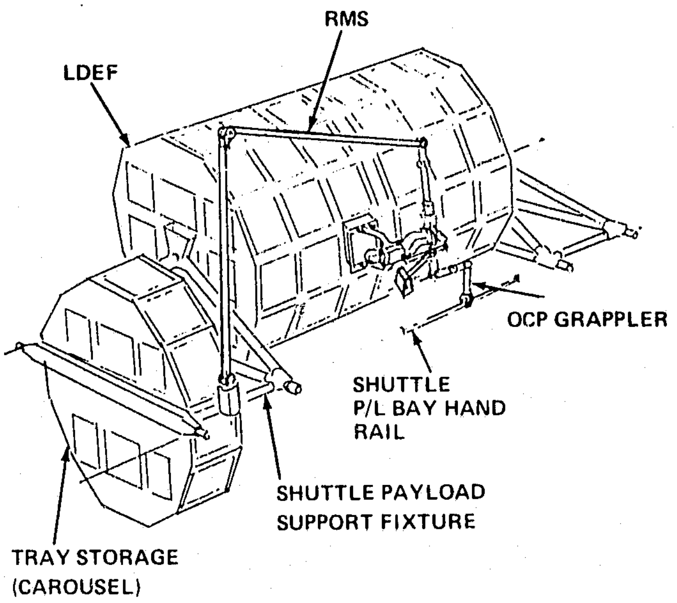

Mission Peculiar Equipment Requirements:

- Payload Handling Fixture Device
- Tool Handling Fixture
- Tray Handling Tool
- Captive Fastener Removal Tool
- Shuttle Cargo Bay Berthing Fixture
- Tray Storage Carousel.

Simulation Configuration:

- Baseline OCP and MDF
- Z Axis Motion Required in Test Article
- Force Reflection System Needed to Simulate RMS Backdrive.

Schedule:

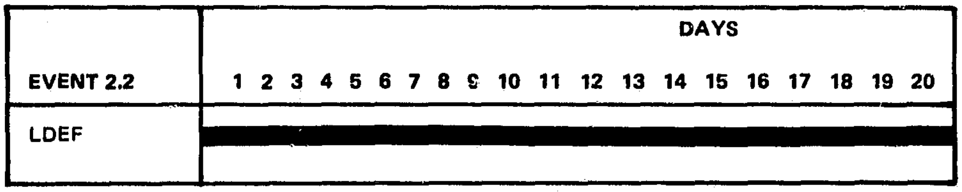

0081-047
III

Simulation Event: 2.3 Solar Max Servicing

Objectives:

- Evaluate Man-Machine Interface
- Develop Servicing Procedure and Time Lines
- Establish Stabilizer Grapple Points
- Develop Requirements for OCP to Support Mission
  - Tool Bin
  - Payload Handling Device
  - Lighting System
  - Mission Peculiar Support Equipment
- Evaluate OCP Servicing Replacement of:
  - Solar Arrays
  - High Gain Antenna
  - Subsystem Modules
- Recalibrate Instruments.

Mockup Requirements:

- Lightweight Structure
- Solar Arrays
- High Gain Antenna
- Instrument Enclosure.

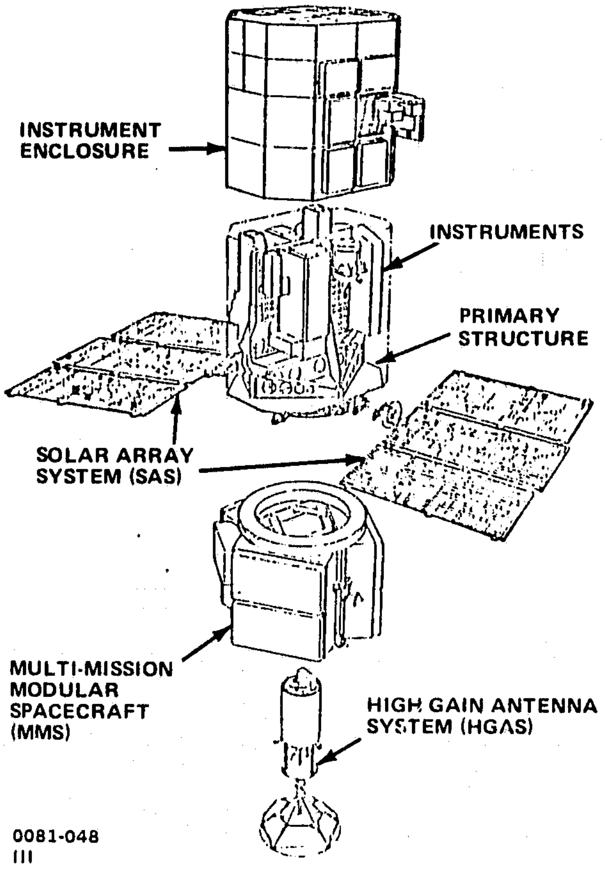

Mission Peculiar Equipment Requirements:

- Payload Handling Fixture Device
- Tool Handling Fixture
- Solar Array Removal Tools (Ref Figure 35)
- High Gain Antenna Repair Tools
- Subsystem Module Removal Tool
- Solar Array/Antenna Stowage
- Instrument Calibration Equipment.

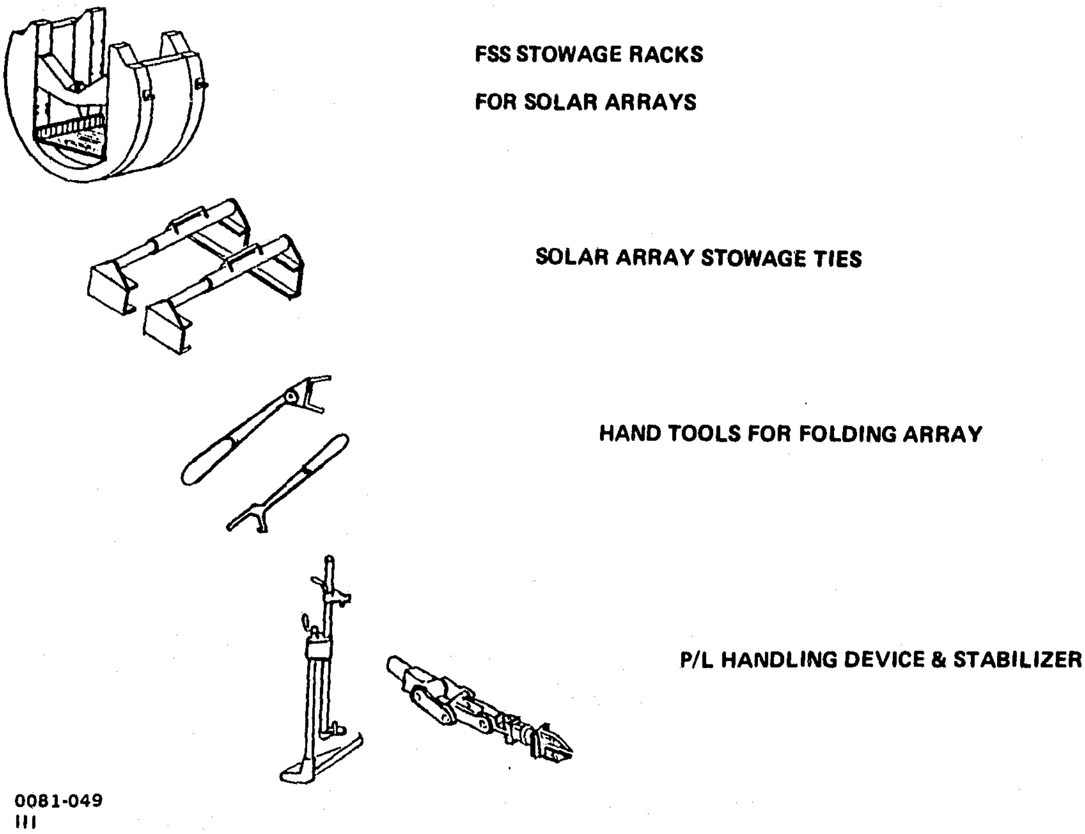

Figure 35. Tools and Equipment for Solar Array Salvage Operation

Simulation Configuration:

- Baseline OCP and MDF
- Z Axis Motion Required in Test Article
- Force Reflection System.

Schedule:

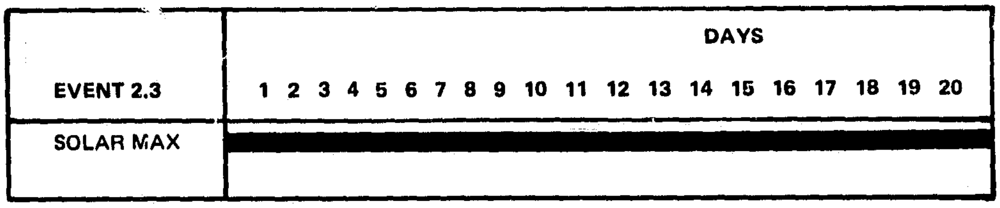

0081-050
III

Simulation Event: 2.4 Gamma Ray Servicing

Objectives:

- Evaluate Man-Machine Interface
- Develop Servicing Procedure and Time Lines
- Establish Stabilizer Grapple Points
- Develop Requirements for OCP to Support Mission
  - Tool Bin
  - Payload Handling Device
  - Lighting System
  - Mission Peculiar Support Equipment
- Exchange Experiment Packages
  - Gamma Ray Detector
  - Imaging Compton Telescope
- Recover Solar Panels
- Resupply Cryogenics (Currently Supplied for 2 yr)
- Calibrate and Check Out Instrumentation.

Mockup Requirements:

- Lightweight Structure
- Experiment Mockups
- Solar Array Panels
- Cryogenic System.
- Refer to Figures 36 and 37 for additional details.

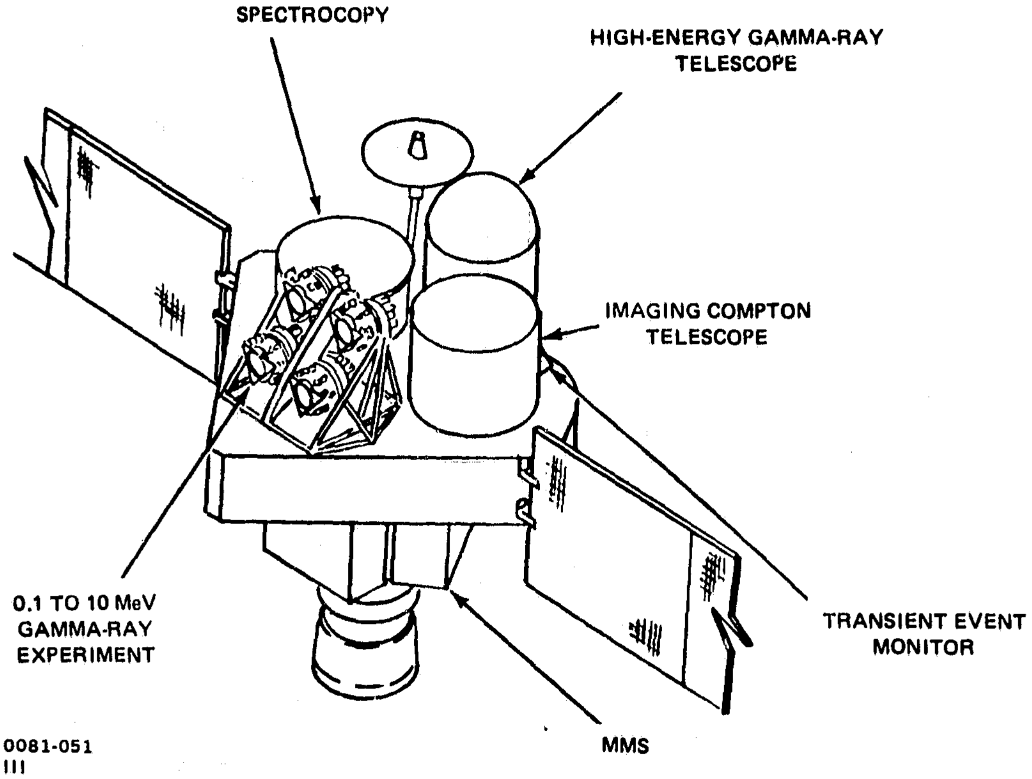

Mission Peculiar Equipment Requirements:

- Payload Handling Fixture Device
- Tool Handling Fixture
- Solar Array Handling Tools
- Cryogenic Servicing Tools and Tankage
- Experiment Removal Tools
- Instrument Calibration Equipment
- Stowage for Removed Items.

Simulation Configuration:

- Baseline OCP and MDF
- Z Axis Motion Required in Test Article
- Force Reflection System Needed to Simulate RMS Backdrive.

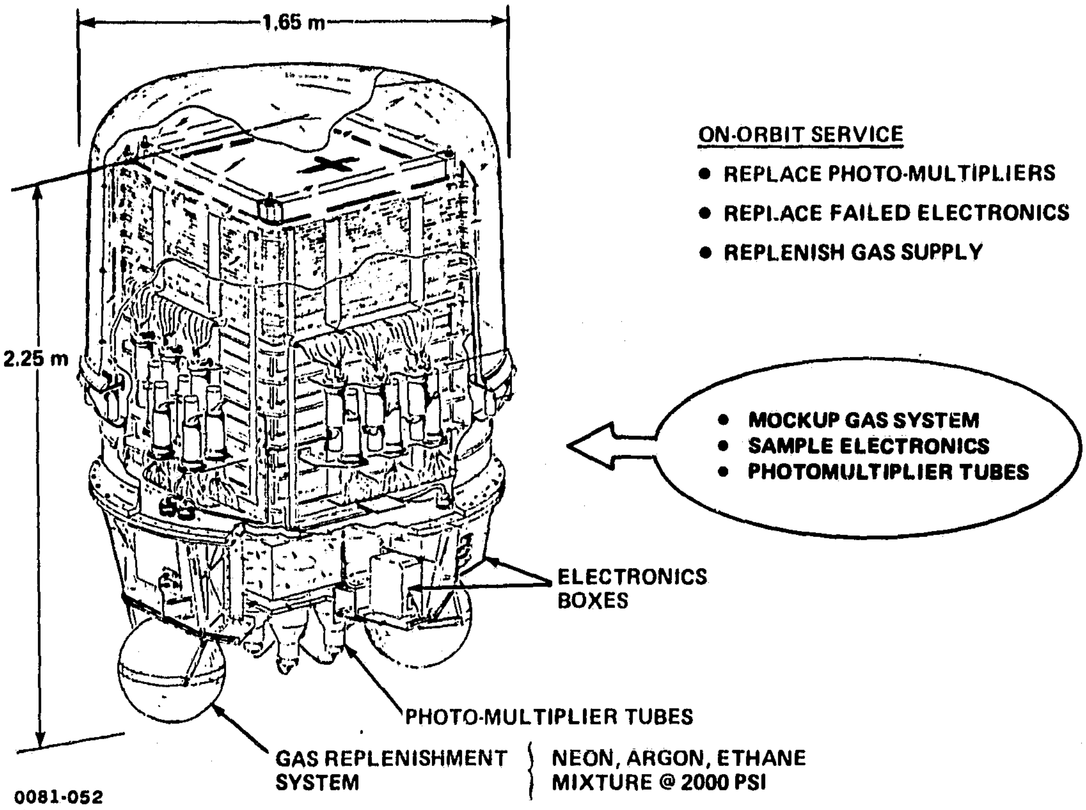

Figure 36. High-Energy Gamma-Ray Telescope Servicing Functions

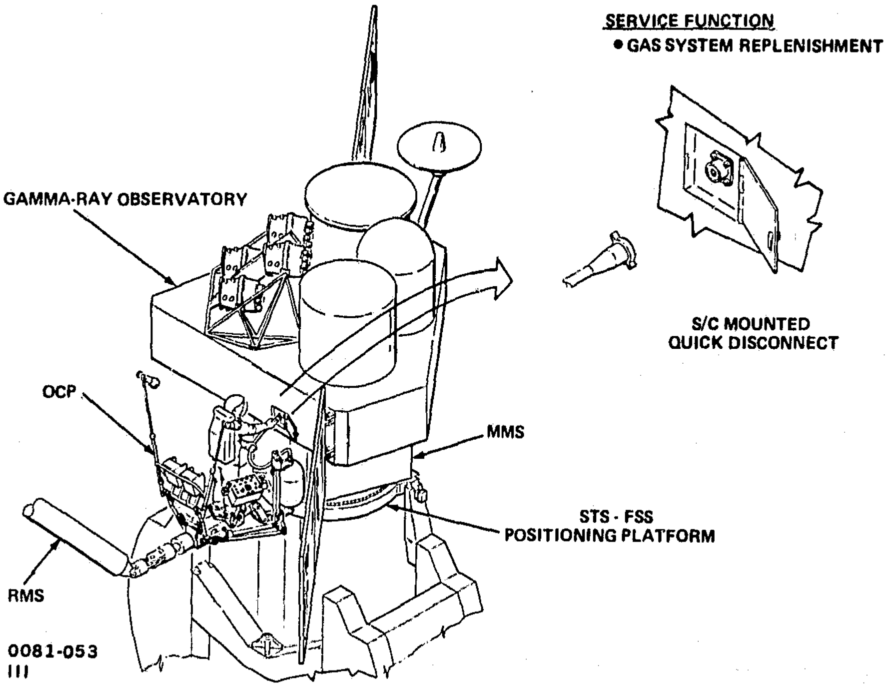

Figure 37. High-Energy Gamma-Ray Telescope Servicing

Schedule:

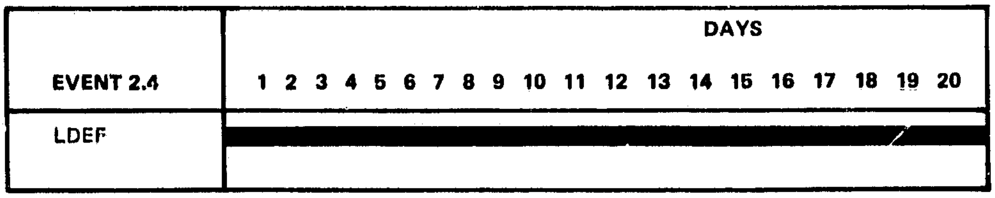

0081-054
III

Simulation Event: 2.5 Space Telescope Servicing

Objectives:

- Evaluate Man-Machine Interface
- Develop Servicing Procedure and Time Lines
- Establish Stabilizer Grapple Points
- Develop Requirements for OCP to Support Mission
  - Tool Bin
  - Payload Handline Device
  - Lighting System
  - Mission Peculiar Support Equipment
- Replace
  - Support System Modules
  - Scientific Instrumentation
- Contingency Replace
  - Hi-Gain Antenna
  - Aperature Door
  - Solar Array
- Calibration and Tune Optics Support Structure.

Mockup Requirements:

- Because of the physical size of the space telescope, the tests may have to be conducted in parts using partial mockups
- Refer to Figures 38, 39, and 40 for further details.

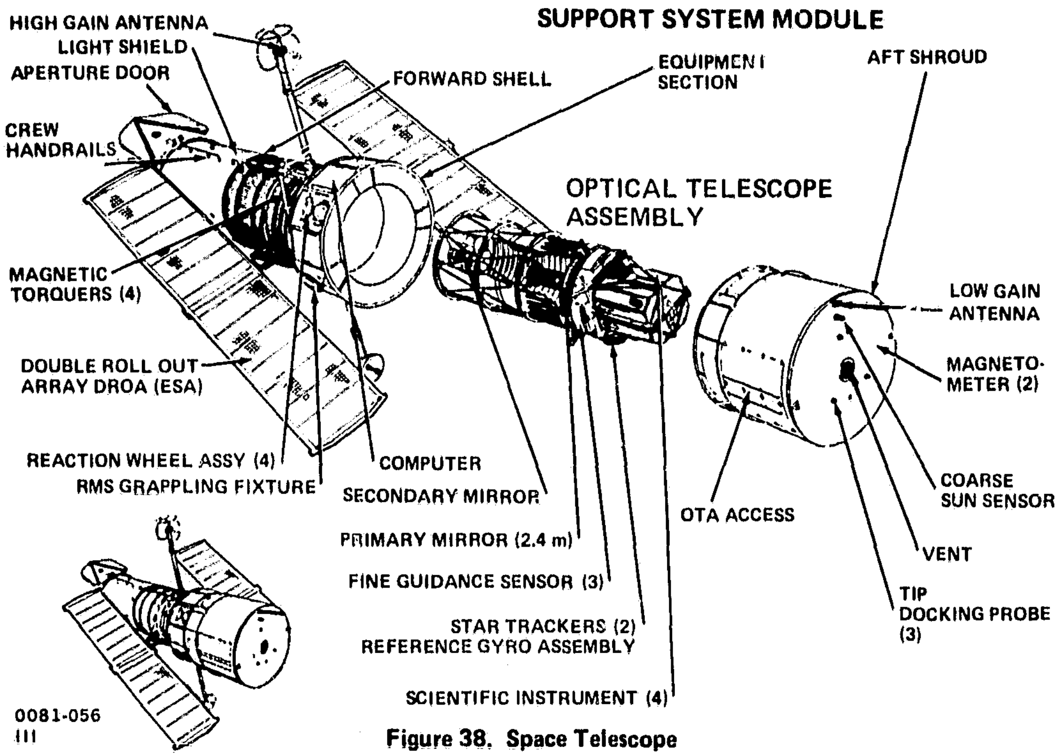

Figure 38. Space Telescope

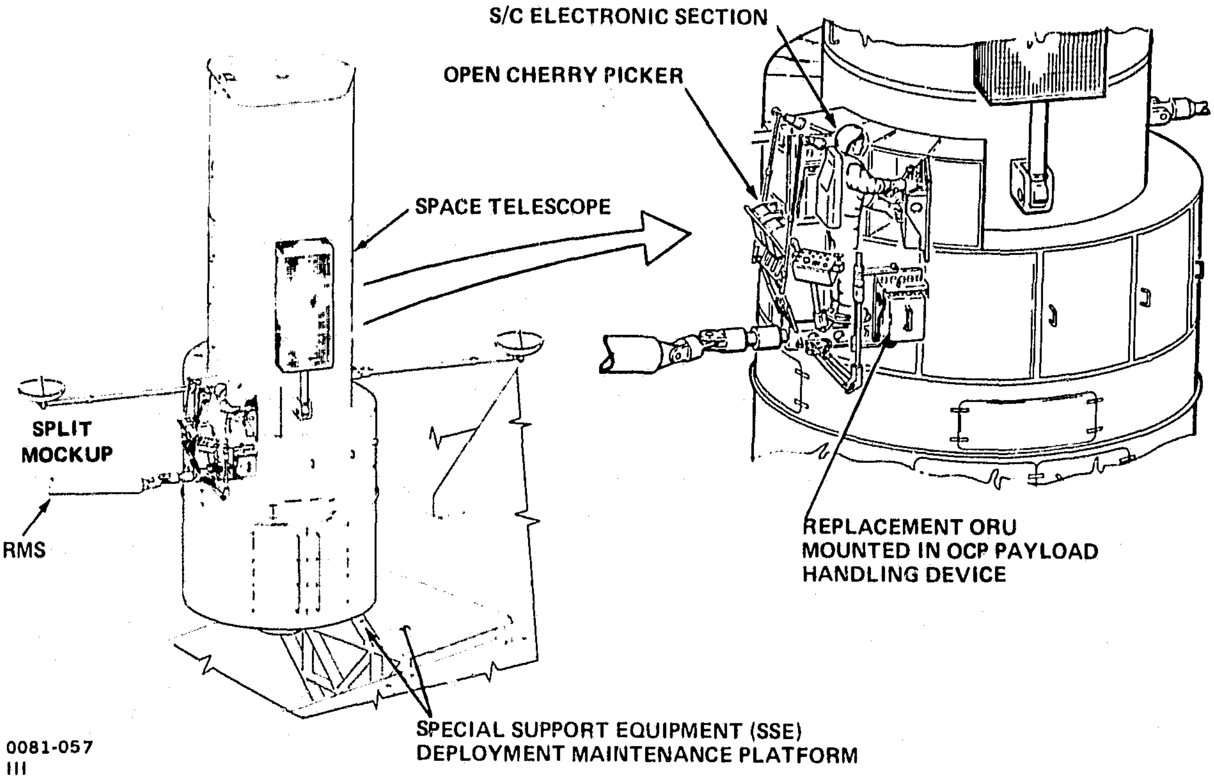

Figure 39. Space Telescope Electronic ORU Replacement

REPRODUCIBILITY OF THE
ORIGINAL PAGE IS POOR

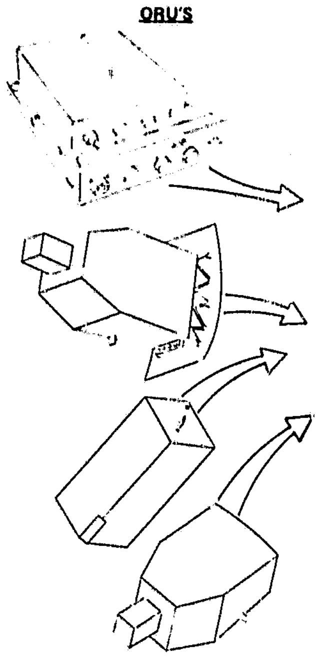

	ORBITAL REPLACEABLE UNIT	QTY	SIZE, IN.	WEIGHT, LB
ELECTRONICS	TCE	2	26x20x7	69
	ACE	1	37x10x7	54
	FGE	3	25x10x7	32
	OCE	1	21x10x7	25
	PD&C	1	25x10x7	40
	RU	4	32x7x7	8
SCIENTIFIC INSTR	WF/PC SCIENTIFIC INSTR	1	31x84x88	500
	AXIAL S.I. MODULE	4	36x36x87	700
SENSORS	FINE GUIDANCE SENSOR (FGS)	3	21x44x74	TBD
	REFERENCE GYRO ASSEMBLY	3		TBD
	FIXED HEAD STAR TRACKER	3		TBD

0081-058
III

Figure 40. Space Telescope Servicing Orbital Replaceable Units

Mission Peculiar Equipment Requirements:

- Payload Handling Fixture Device
- Tool Handling Fixture
- Removal Tools
- Calibration Instrumentation (Ref Figure 41)

Simulation Configuration:

- Baseline OCP and MDF
- Z Axis Motion Required in Test Article
- Force Reflection System Needed to Simulate RMS Backdrive.

C-2

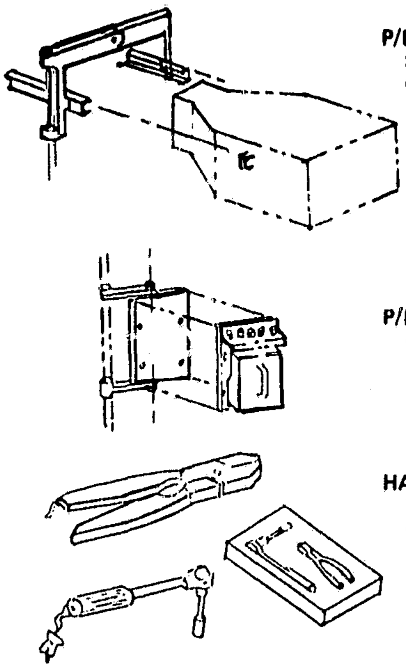

P/L HANDLING DEVICE ADAPTER
SUPPORT & GUIDES FOR REMOVAL & INSTALLATION OF FGS & SI ORUs

P/L HANDLING DEVICE ADAPTER
CAROUSEL RETENTION DEVICE FOR ELECTRONIC ORU REMOVAL & INSTALLATION

HAND TOOLS
TO BE STOWED IN TRAYS OF THE OCP TOOL BIN

0081-059
III

Figure 41. OCP Special Support Equipment and Tools

Schedule:

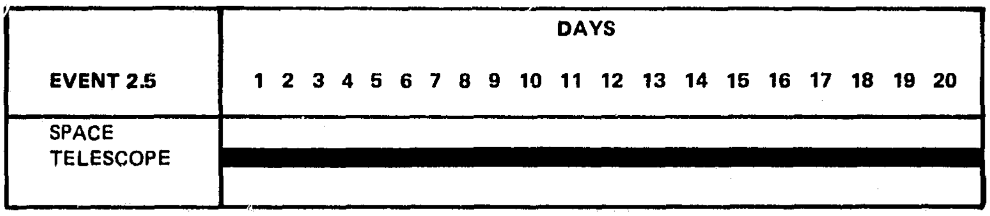

0081-060
III

Simulation Event: 3.1 Beams/Truss/Tension Cable or Tapes

Objectives:

- Evaluate Man-Machine Interfaces
- Develop Work Procedures and Time Lines
- Develop Support Equipment Requirements
- Develop Monitor/Checkout Instrumentation Requirements
- Develop OCP Requirements to Support Mission
  - Tool Bin
  - Payload Handling Device
  - Lighting System
  - Establish Stabilizer Grapple Points
- Evaluate Installation and Checkout of Subassemblies Containing:
  - Beams/Truss
  - Tension Cable/Tapes
  - Beam Attachments
    - Centroidal Joints
    - Butt Joints
    - Lap Joints.

Test Article Requirements:

- Constructed of 1/2-m beams with 1-m sized caps
- 5-m long x 3-m wide
- Mass/inertia model test items.

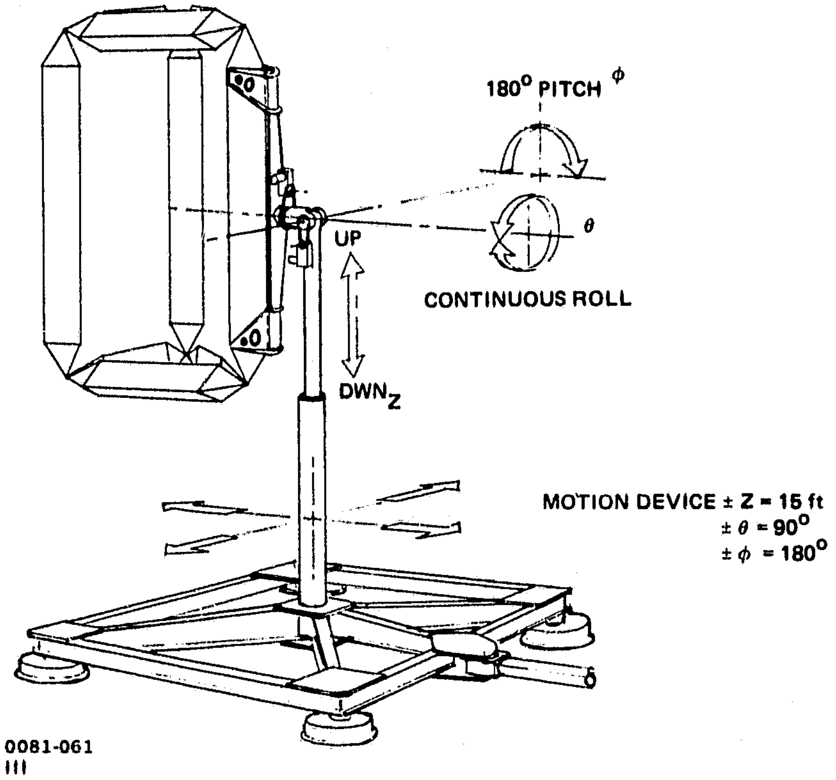

JSC MRWS SIMULATION STRUCTURE NO. 1 SUPPORT

This universal test rig will be used to mount construction elements for all Simulation Event 3 studies.

Mission Peculiar Equipment Requirements:

- Payload Handling Device
- Tool Handling Fixture
- Grapple Points
- Work Tools
- Monitor/Check Out Instrumentation
- Tension Cable/Tape Reel
- Equipment Stowage.

Simulation Configuration:

- Baseline OCP and MDF
- Z Axis Motion in Test Article
- Force Reflection System for RMS Dynamics.

Schedule:

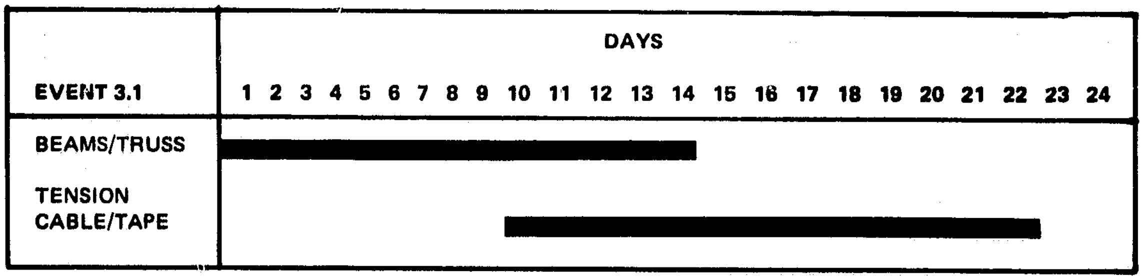

0081-062
III

Simulation Event: 3.2 Panels, Solar Blankets, Solar Arrays

Objectives:

- Evaluate Man-Machine Interfaces
- Develop Work Procedures and Time Lines
- Develop Support Equipment Requirements
- Develop Monitor/Checkout Instrumentation Requirements
- Develop OCP Requirements to Support Mission
    - Tool Bin
    - Payload Handling Device
    - Lighting System
    - Establish Stabilizer Grapple Points
- Evaluate Installation and Checkout of Subassemblies Containing:
    - Panels
    - Film Membranes
    - Solar Blankets
    - Solar Arrays
    - Mirrors
    - RF Wire Mesh/Radiator Panels.

Test Article Requirements:

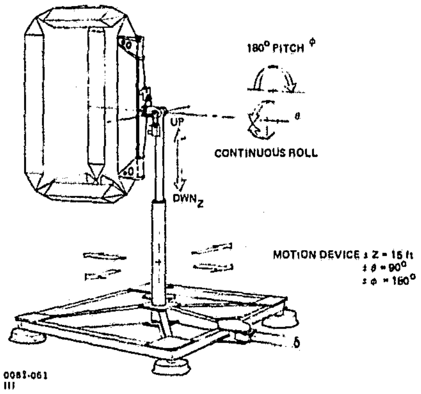

JSC MRWS SIMULATION STRUCTURE NO. 1 SUPPORT

This universal test rig will be used to mount construction elements for all Simulation Event 3 studies.

Mission Peculiar Equipment Requirements:

- Payload Handling Device
- Tool Handling Fixture
- Grapple Points
- Work Tools
- Monitor/Check Out Instrumentation
- Tension Cable/Tape Reel
- Equipment Stowage.

Simulation Configuration:

- Baseline OCP and MDF
- Z axis Motion in Test Article
- Force Reflection System for RMS Dynamics.

Schedule:

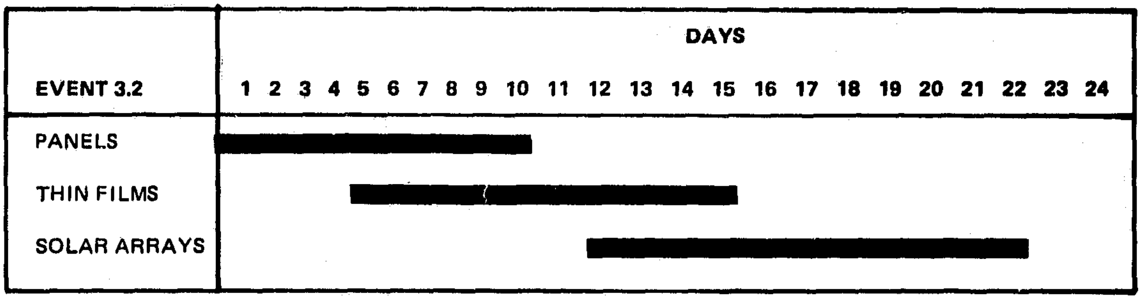

0081-063
III

Simulation Event: 3.3 Electrical Cable/Bus, Microwave Guides, Fluid/Gas Lines

Objectives:

- Evaluate Man-Machine Interfaces
- Develop Work Procedures and Time Lines
- Develop Support Equipment Requirements
- Develop Monitor/Checkout Instrumentation Requirements
- Develop OCP Requirements to Support Mission
  - Tool Bin
  - Payload Handling Device
  - Lighting System
  - Establish Stabilizer Grapple Points
- Evaluate Installation and Checkout of Subassemblies Containing:
  - Electrical Cable/Bus
  - Microwave Guide
  - Fluid/Gas Lines.

Test Article Requirements:

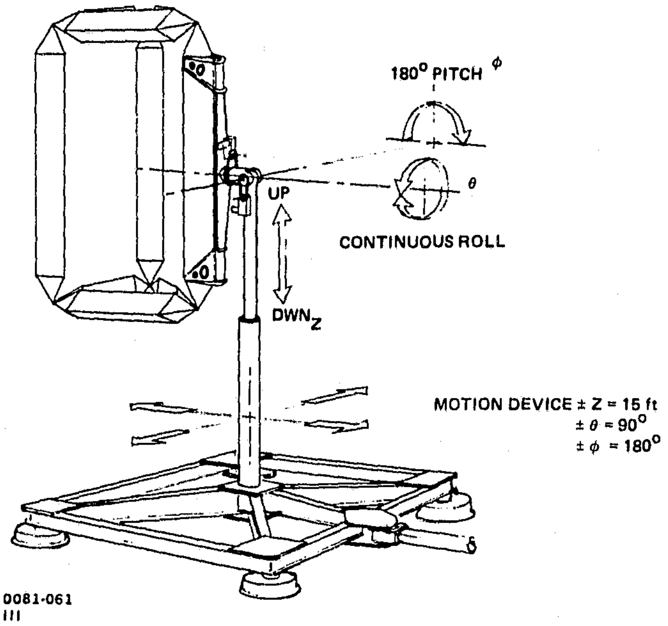

JSC MRWS SIMULATION STRUCTURE NO. 1 SUPPORT

This universal test rig will be used to mount construction elements for all Simulated Event 3 studies.

Mission Peculiar Equipment Requirements:

- Payload Handling Device
- Tool Handling Fixture
- Grapple Points
- Work Tools
- Monitor/Check Out Instrumentation
- Cable/Tube Reel
- Equipment Stowage.

Simulation Configuration:

- Baseline OCP and MDF
- Z Axis Motion in Test Article
- Force Reflection System for BMS Dynamics.

Schedule:

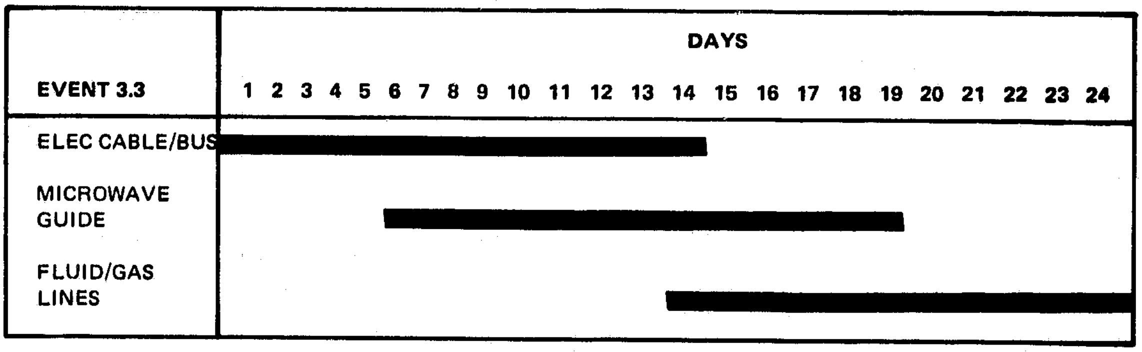

0081-064
111

Simulation Event: 3.4 Hardware Components

Objectives:

- Evaluate Man-Machine Interfaces
- Develop Work Procedures and Time Lines
- Develop Support Equipment Requirements
- Develop Monitor/Checkout Instrumentation Requirements
- Develop OCP Requirements to Support Mission
  - Tool Bin
  - Payload Handling Device
  - Lighting System
  - Establish Stabilizer Grapple Points
- Evaluate Installation and Checkout of Subassemblies Containing:
  - Subsystems
  - Cryogenics
  - Rotary Joints
  - Attitude Control Reaction Wheels.

Test Article Requirements:

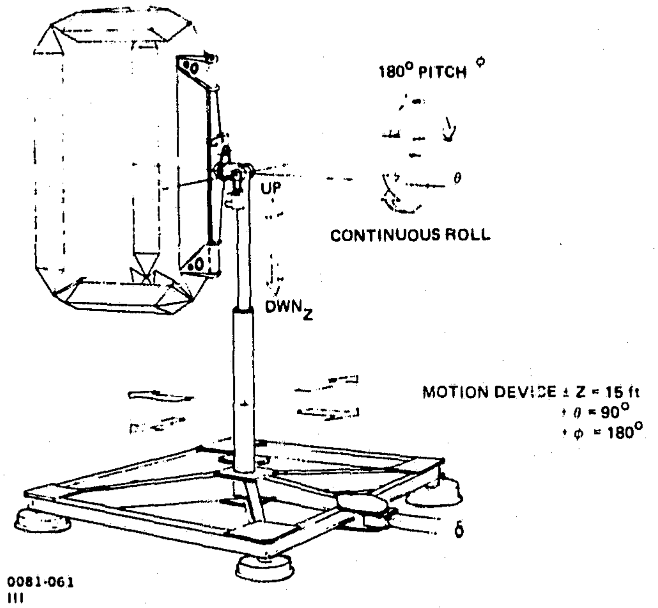

JSC MRWS SIMULATION STRUCTURE NO. 1 SUPPORT

This universal test rig will be used to mount construction elements for all Simulation Event 3 studies.

Mission Peculiar Equipment Requirements:

- Payload Handling Device
- Tool Handling Fixture
- Grapple Points
- Work Tools
- Monitor/Check Out Instrumentation
- Equipment Stowage.

Simulation Configuration:

- Baseline OCP and MDF
- Z Axis Motion in Test Article
- Force Reflection System for RMS Dynamics.

Schedule:

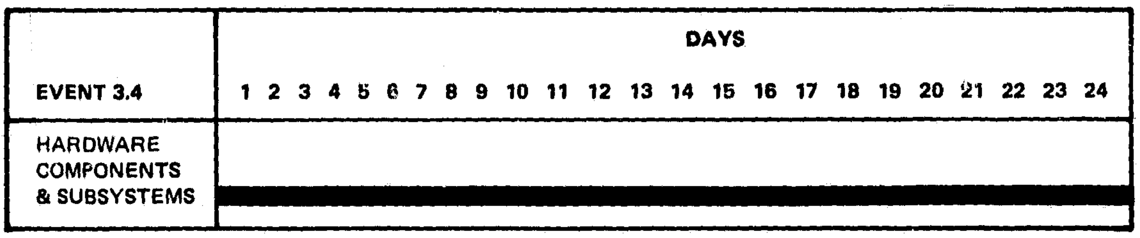

0081-065

5.3 SIMULATION SCHEDULE

Figure 42 depicts a 24-month test planning schedule divided into four simulation events; DTA Integration and Checkout, OCP Design Development, Satellite Servicing, and Construction Tasks:

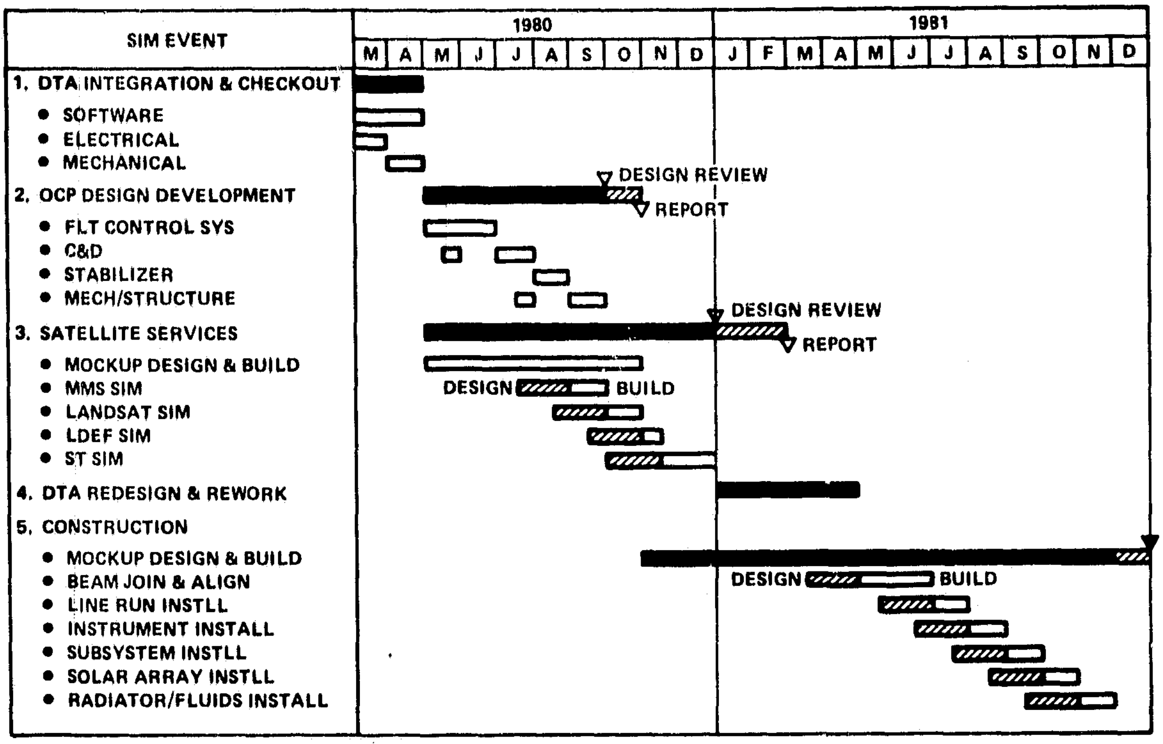

0081-066
III

Figure 42. OCP Simulation Schedule

- DTA Integration and Checkout - This event will integrate the DTA into the MDF simulator. The checkout will consist of component functional tests and a simple mission scenario. Two months have been allocated for this event
- OCP Design Development Testing - There are four primary areas of critical design issues that are to be solved by simulation testing: the flight control system design, the C&D panel design, the stabilizer design, and the mechanical/structural design. The simulation will consist of testing the conceptual design in a simulated dynamic mission environment (3 DOF-6 DOF) until the design is validated. Five months have been allocated for this event

- Satellite Services - The servicing mission model will be used to define specific satellites to be studied (i.e., MMS, LDEF, etc). The objective will be to validate the OCP design, develop mission procedures, and define support equipment requirements. The testing will consist of satellite servicing scenarios utilizing mockups of the subject satellites. Five months have been allocated for this event

- Construction Tasks - The construction mission model will be used to define specific construction tasks to be studied (i.e., beam/truss joining and alignment). The objective will be to validate the OCP design, develop mission procedures, and define support equipment requirements. The testing will consist of construction task scenarios utilizing models of construction articles (i.e., beams/truss). Seven months have been allocated for this event.

The 24-month schedule defines the test matrix for program planning purposes. A 30/90 day detailed schedule of actual tests to be conducted will be developed to facilitate planning and provisioning for the day-to-day testing activities.

Section 6

DTA PROCEDURES

The following procedures cover the installation, servicing, checkout, and operating procedures required for the OCP-DTA checkout, integration, and development test program phases. These procedures are compatible with JSC-MDF operating procedures and the format allows for future expansion and modification as required by the DTA evolution.

The DTA integration procedures cover the physical interfacing of the DTA with MDF equipments and the functional testing required. The DTA operations procedures encompass DTA operation and servicing. The operation procedure includes instructions for operation in any simulation tests and provide theory of operation for familiarization of JSC personnel. The servicing procedure will cover periodic calibration/maintenance requirements as well as unscheduled maintenance.

The following documents outline the various policies and procedures for the MDF at JSC:

- MDF General Operating Procedures - JSC 10843
- MDF General Description - JSC 11029
- MDF Detail Procedures - JSC 10881
- MDF Training Plan - JSC 10842
- MDF Failure Mode and Effects Analysis JSC 10882
- Johnson Space Center Safety Manual JSC 1700 Rev A.

When the OCP is operated in the MDF facility, these established procedures must be complied with and the OCP procedures are meant to compliment the existing MDF procedures.

6.1 OPERATING PROCEDURES

6.1.1 OCP Deployment and Folding Operation

6.1.1.1 General - The OCP can be folded into a package whose overall dimensions are 3 ft x 3 ft x 6 ft. In this configuration, the OCP is stowed in payload bay of the orbiter. When ready for use, the OCP is detached from its mounting fittings to the payload bay structure and captured by the orbiter RMS and moved to a position where it can be deployed by the operator.

6.1.1.2 Applicable Documents -

C76-200	DTA FINAL ASSY DWG
C76-203	LIGHT STANCHION ASSY DWG
C76-207	C&D CONSOLE SUPPORT INSTL DWG
C76-214	TOOL BOX ASSY DWG
C76-215	C&D STOP INSTL DWG
C76-220	PAYLOAD HANDLING DEVICE ASSY DWG.

6.1.1.3 Folding Sequence - Eight steps are required to manually fold the OCP from its fully deployed position to the fully folded configuration. Figure 8 illustrates the folding sequence which is as follows:

1. Operator using the C&D console lowers the stabilizer to its stowed position under the strongback (assumes an electro mechanical stabilizer)
2. Operator lowers the lights on the telescoping tubes to their minimum height, rotates them to line up with the lower support frame, and then telescopes them in to their minimum width
3. Operator lowers tool boxes from their upright positions to the off-line positions
4. Operator rotates payload handing device to forward position and then folds them to their stowed position
5. Operator now rotates foot restraint platform to forward position and detaches himself from the OCP
6. The light support frame is now lowered forward to its stowed position over the foot restraint platform

7. Lowers tool box from off-line to full stow position

8. The C&D console is now unlocked, folded aft, and latched in its stowed position, trapping the light stanchion support frame and the tool boxes.

Figure 9 is a picture of the OCP folded configuration.

6.1.1.4 Deployment Sequence - Reverse the above procedure to unfold the OCP.

6.1.2 Foot Restraint Assembly

6.1.2.1 General - The restraint system consists of a flat plate with a pair of toe bars and a set of heel restraints rigidly mounted to the plate (Figure 43). A boot-to-restraint interface is provided on the space suit assembly. The plate is capable of 360-deg. rotation, independently of the position or rotation of the C&D console pedestal and can be locked at each 45-deg position.

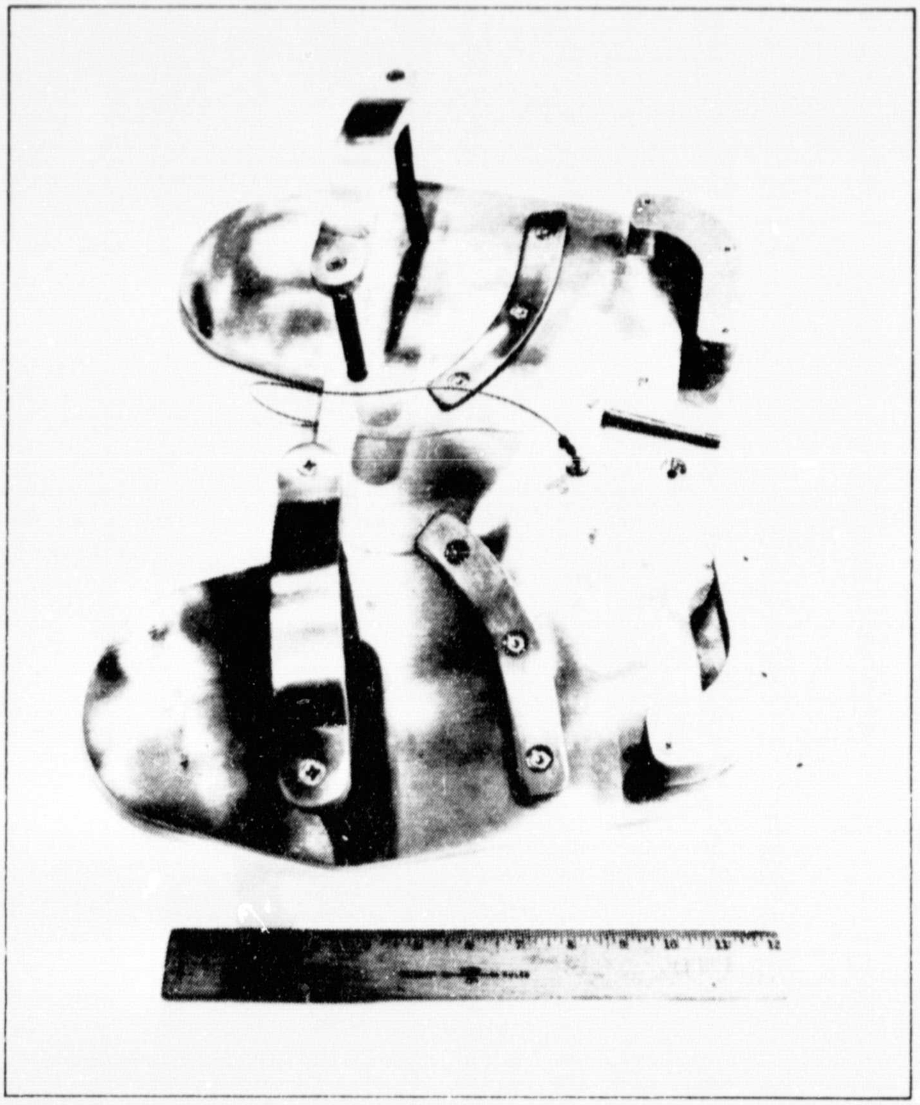

0081-067
III

Figure 43. OCP Foot Restraint System

6.1.2.2 Applicable Documents -

C76-205 FOOT RESTRAINT PLATFORM INSTL DWG

6.1.2.3 Operation - Egress or Ingress - The suited operator mounts the platform supporting himself by hand holds on the C&D console or the light stanchion. He places one boot in the toe restraint and pivots the heel outward from his body to lock his boot in the restraint. He repeats the above procedure for his other boot. The technician will check the foot restraint to see whether boots are locked in restraints properly. Operator then attaches lanyard (Figure 44) to hip tethering on his suit. The above procedure is reversed when the operator egresses the foot restraints.

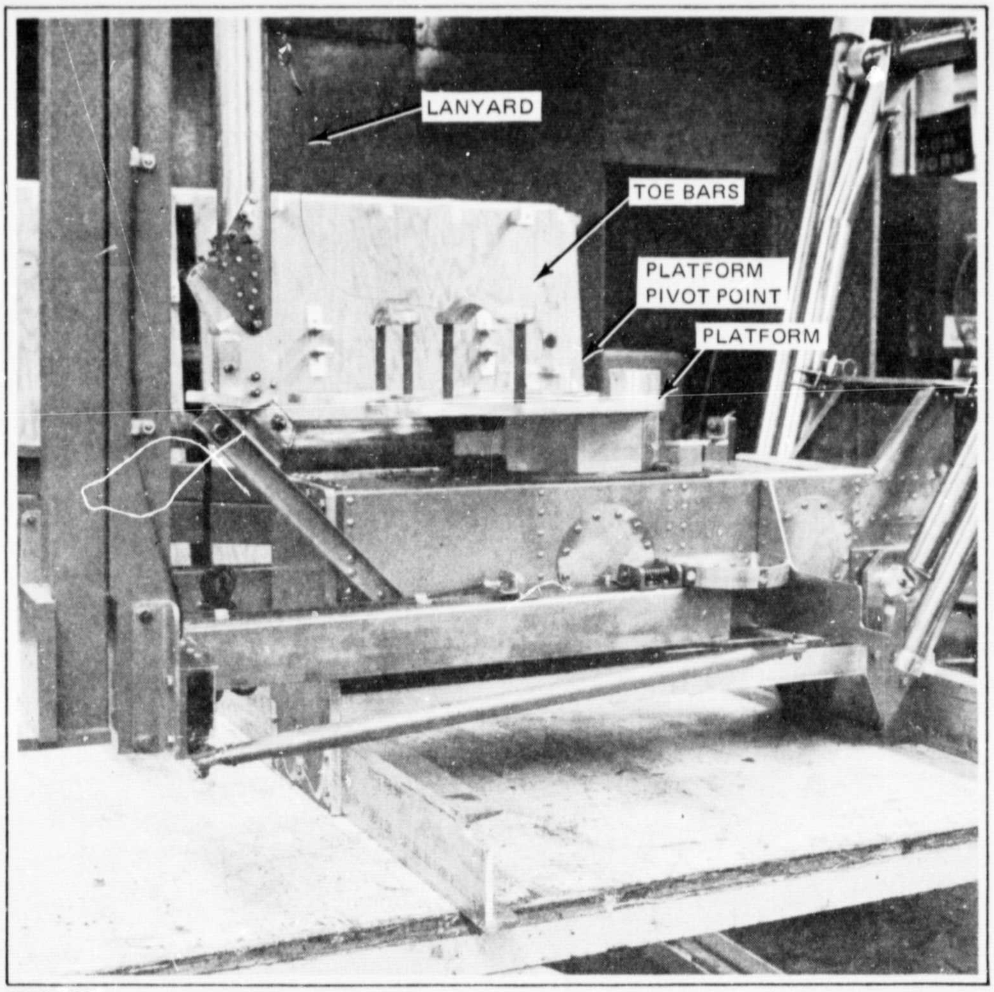

Figure 44. Foot Restraint Assembly

REPRODUCIBILITY OF THE
ORIGINAL PAGE IS POOR

6.1.2.4 Platform Rotation - The operator pulls on the lanyard attached to his suit which unlocks platform and using the hand holds on the C&D console or light stanchions rotates himself to the desired orientation. Once he has begun to rotate and reaches his desired position, he can release the lanyard and the platform will automatically lock in the selected 45-deg position. He can wiggle the platform back and forth to ascertain the platform is locked.

6.1.3 Safety/Rest Restraint

TBD

6.1.4 Stabilizer Assembly

TBD

6.1.5 Light Stanchions

6.1.5.1 General - Lighting is provided with three 75-W, 4000 candel-power incandescent spotlights. One light fixture is mounted to a bracket at the front of the strongback structure and the other two are attached to adjustable, telescoping tubing frames which are attached to the rear of the strongback. The telescoping tubular frame provided for each light fixture adjustments in height, width laterally, as well as azimuth and elevation. Each light fixture is attached to the frame through a swivel joint and a safety guard is provided over each light. The tool bins and hand holds are attached to the light stanchions (Figure 45).

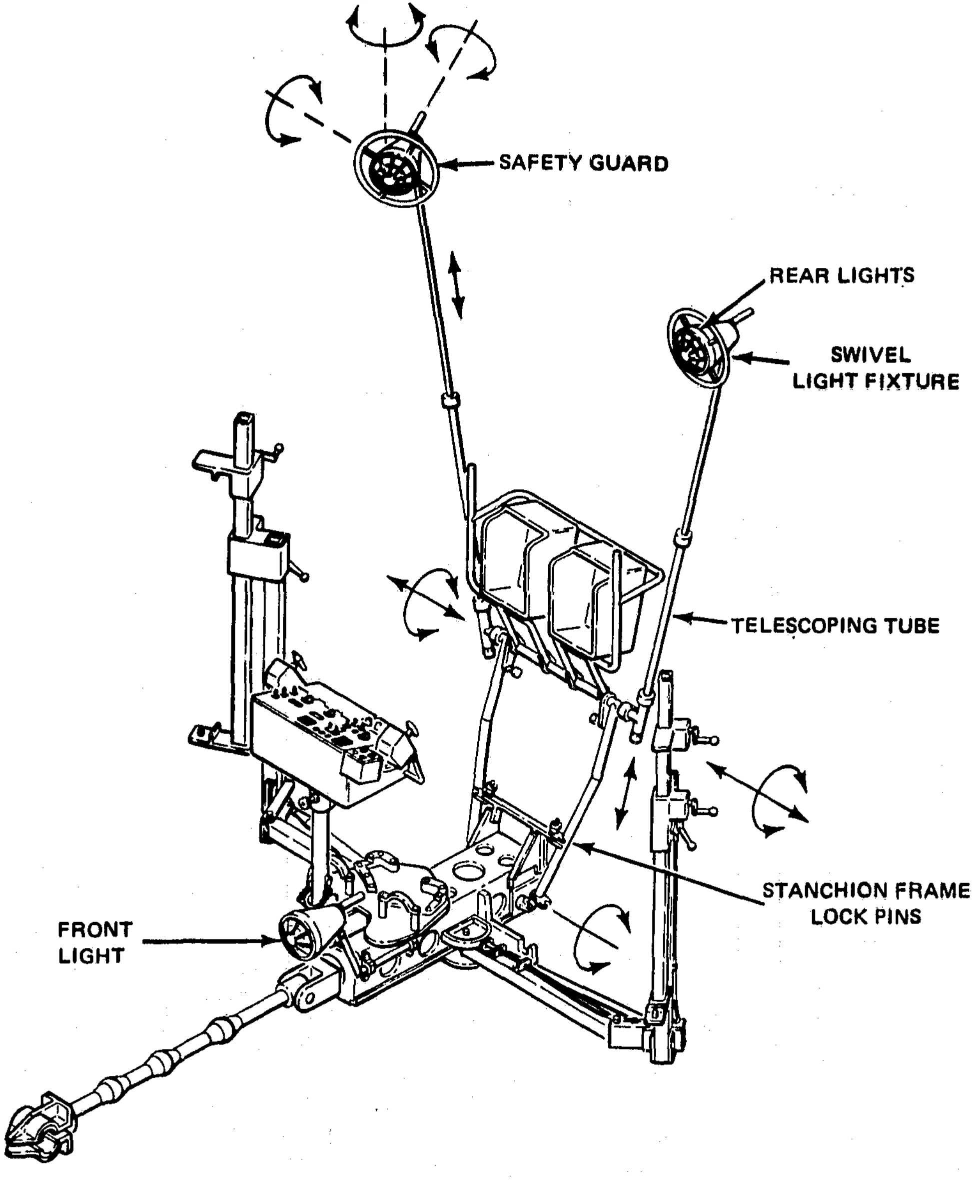

Figure 45. Light Stanchions

6.1.5.2 Applicable Documents -

C76-200	DTA FINAL ASSY DWG
C76-203	LIGHT STANCHION ASSY DWG
C76-228	LIGHT FIXTURE ASSY DWG

SYLVANIA PART NO. 75PAR/35P 30^o x 30^o INCANDESCENT 115 V, 60 Hz SPOTLIGHT

6.1.5.3 Deployment - Starting with the OCP in the fully folded configuration and after the C&D console is unlocked and erected vertically, the tool bins are rotated to their off line position and locked. The stanchion is rotated to the vertical position until the lock pin holes in the stanchion bracket are lined up with the holes in base module bracket located at the top rear of the base module. The two lock pins are then inserted through the brackets (Figure 46). The lateral knurled knobs on each side of the light stanchions are rotated, unlocking the horizontal telescoping tubes. Each horizontal tube is pulled outboard to the desired width and the stanchion rotated to the desired attitude, then tighten the knurl knob. Each light stanchion should remain in the position selected.

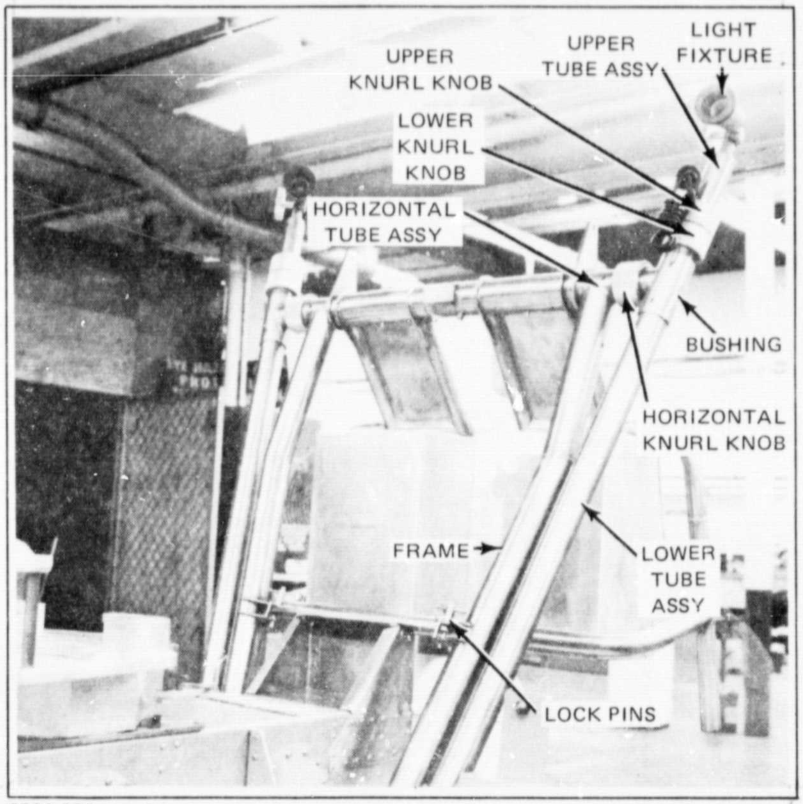

0081-070
III

Figure 46. Light Stanchion Assembly

Unlock each lower telescoping stanchion tube by rotating the lower knurl knob shown in Figure 46. Move lower tube upward until bottom of tube hits bushing on end of lateral telescoping tube assembly, and then tighten the lower knurl knob. The lower telescoping tube should be locked in this position. Rotate the upper knurled knob unlocking the upper telescoping tube assembly and move the upper tube to the vertical height desired. Rotate knurled knob to lock upper tube in position chosen. Each light fixture position can be varied by either grabbing the handle at the rear of the fixture or the ring attached to the guard assembly and moving the fixture. The fixture is held in the position selected by friction at the fixture swivel pivot.

6.1.5.4 Light Replacement - The guard assembly is removed from the light fixture by removing the four screws that fasten the guard to the hand assembly. The bulb is replaced and the guard reinstalled.

6.1.6 Controls and Displays Pedestal

6.1.6.1 General - The C&D Pedestal supports the C&D Panel and rotates about the same pivot point as the foot restraint platform, but independently. The C&D Panel height can be adjusted vertically approximately every inch for a total of 8 1/2 in. The pedestal can be positioned and locked in a forward 0-deg position, 45°, 90°, 120°, and 180° aft positions. The pedestal can also be positioned and locked in the vertical position and three forward off-line positions 9°, 18°, and 27°. The vertical tube of the pedestal can be rotated 90° for folding.

6.1.6.2 Applicable Documents -

C76-200	DTA FINAL ASSY DWG
C76-207	C&D CONSOLE SUPPORT INSTL DWG
C76-209	C&D CONSOLE LATCH MECH INSTL DWG
C76-211	C&D CONSOLE ASSY & INSTL DWG
C76-215	C&D STOP INSTL DWG

6.1.6.3 Deployment and Off-Line Positioning - To unfold the C&D pedestal, the lock pin is removed from the stop bracket located at the top and rear of the base structure (Figure 47). The stop plate is then moved forward and the pedestal rotated 90° and automatically locked in the vertical position. To fold the pedestal, the handle located below the panel and on the rear of pedestal is rotated away from the operator to release the locking mechanism and the vertical tube rotated 90° to the folded position (Figure 48). The stop plate is moved aft until the fitting end traps the hand hold on the C&D panel and the lockpin is installed in the stop bracket.

To move the pedestal to the forward off-line 9°, 18°, or 27° positions, the same handle above is rotated away from the operator to release the locking mechanism. The pedestal is rotated to the desired position, the handle released, and the pedestal locked in position.

6.1.6.4 Operating Positions - To move the pedestal from the forward operating position to either the 45°, 90°, 120°, or 180° aft positions, the handle located below the bottom of the C&D panel and on the aft side of the pedestal is rotated toward the operator to release the locking mechanism.

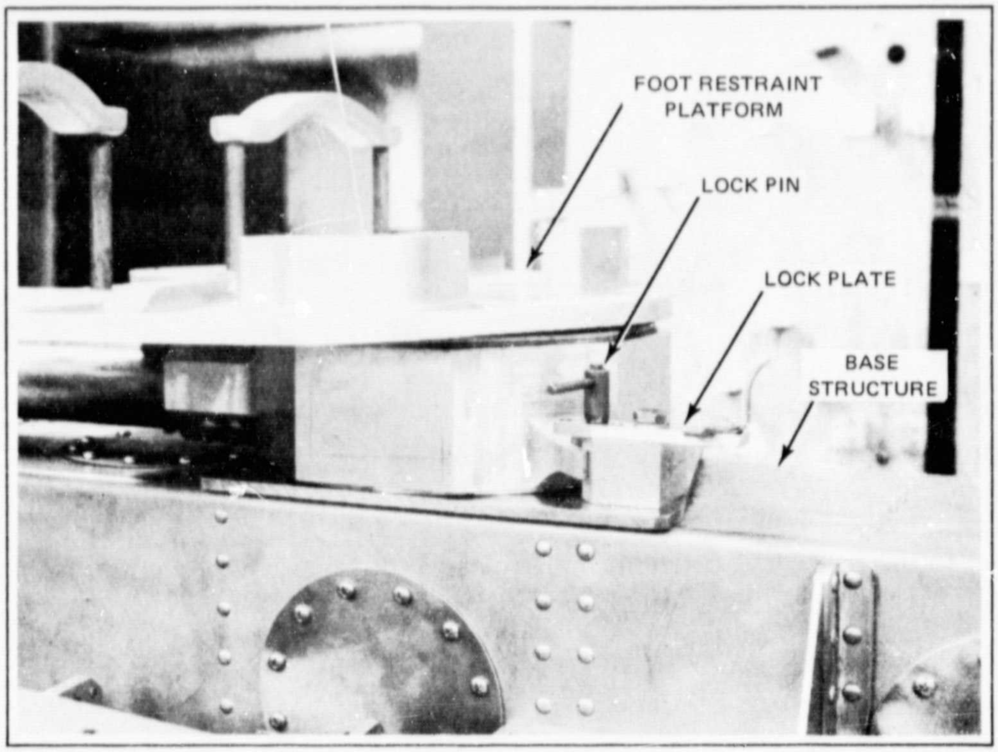

0081-071
III

Figure 47. C&D Console Pedestal Lock Assembly

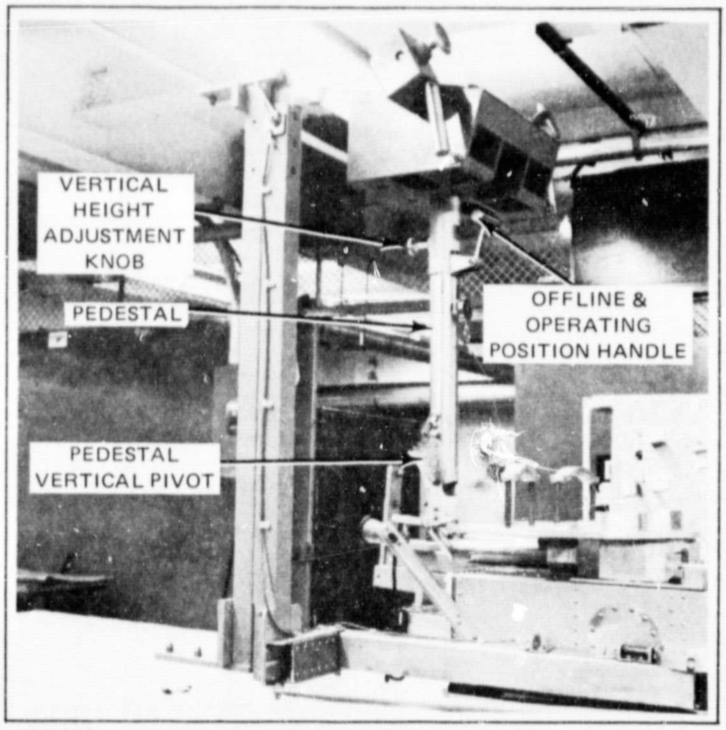

0081-072
III

Figure 48. C&D Console Pedestal Assembly

WARNING

0081-073

|||

THE PEDESTAL MUST BE IN THE 90-DEG VERTICAL POSITION BEFORE ROTATING

The pedestal is rotated to the desired position, the handles released and the pedestal automatically locks in position chosen.

6.1.6.5 Vertical Height Adjustment - The C&D panel can be adjusted vertically with respect to the top of the pedestal by pulling on the knob located below the panel and on the forward side of the tube. The panel is then positioned to the desired height, the knob released, and the panel moved slightly vertically until the knob automatically retracts and locks the panel in that position (Figure 48).

6.1.7 Tool Bin Assembly

6.1.7.1 General - Two tool bins are located on the light stanchions frame at the rear of the DTA. The tool bins rotate about the horizontal frame of the light stanchion and can be locked in three positions; operating, off line and stowed.

6.1.7.2 Applicable Documents -

C76-200 DTA FINAL ASSY DWG
C76-213 TOOL BIN ASSY & INSTL DWG

6.1.7.3 Deployment - To deploy the tool bins from their folded stowed position, the two lock pins located on the horizontal frame of the light stanchions are removed and the tool bins rotated up to their operating position until the holes in tool bin bracket line up with the holes in frame of the light stanchion. The two lock pins are then inserted in the holes, locking the tool bins in position (Figures 49 and 50).

WARNING

0081-076
III

TOOL BIN SHALL BE IN OPERATING POSITION WHEN ATTACHING MDF END EFFECTOR TO GRAPPLE FITTING ON REAR OF DTA

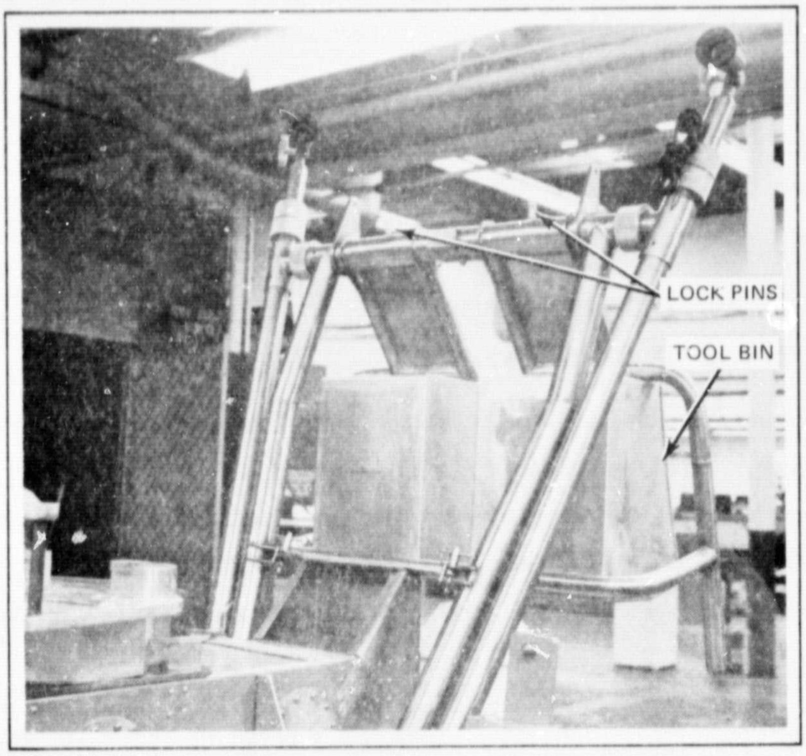

0081-074
III

Figure 49. Tool Bin Assembly – Stowed

0081-075
III

Figure 50. Tool Bin Assembly – Deployed

REPRODUCIBILITY OF THE ORIGINAL PAGE IS POOR

6.1.8 Payload Handling Device

6.1.8.1 General - Two payload handling devices are attached to the DTA to aid the operator in servicing satellites. Each device consists of a vertical pedestal with top and bottom interfaces to support the payload. The lower interface is fixed to the pedestal structure; the upper interface is vertically adjustable by the operator to accommodate different size and shape payloads. The payload pedestal can be vertically adjustable and is attached to the swing arm pedestal. The swing arm pedestal is mounted at the end of the swing arm which can pivot about a point located at the side of the base structure (Figures 51 and 52). The swing arm can be locked at a 90 degree side position or at a 25° or 3° forward position.

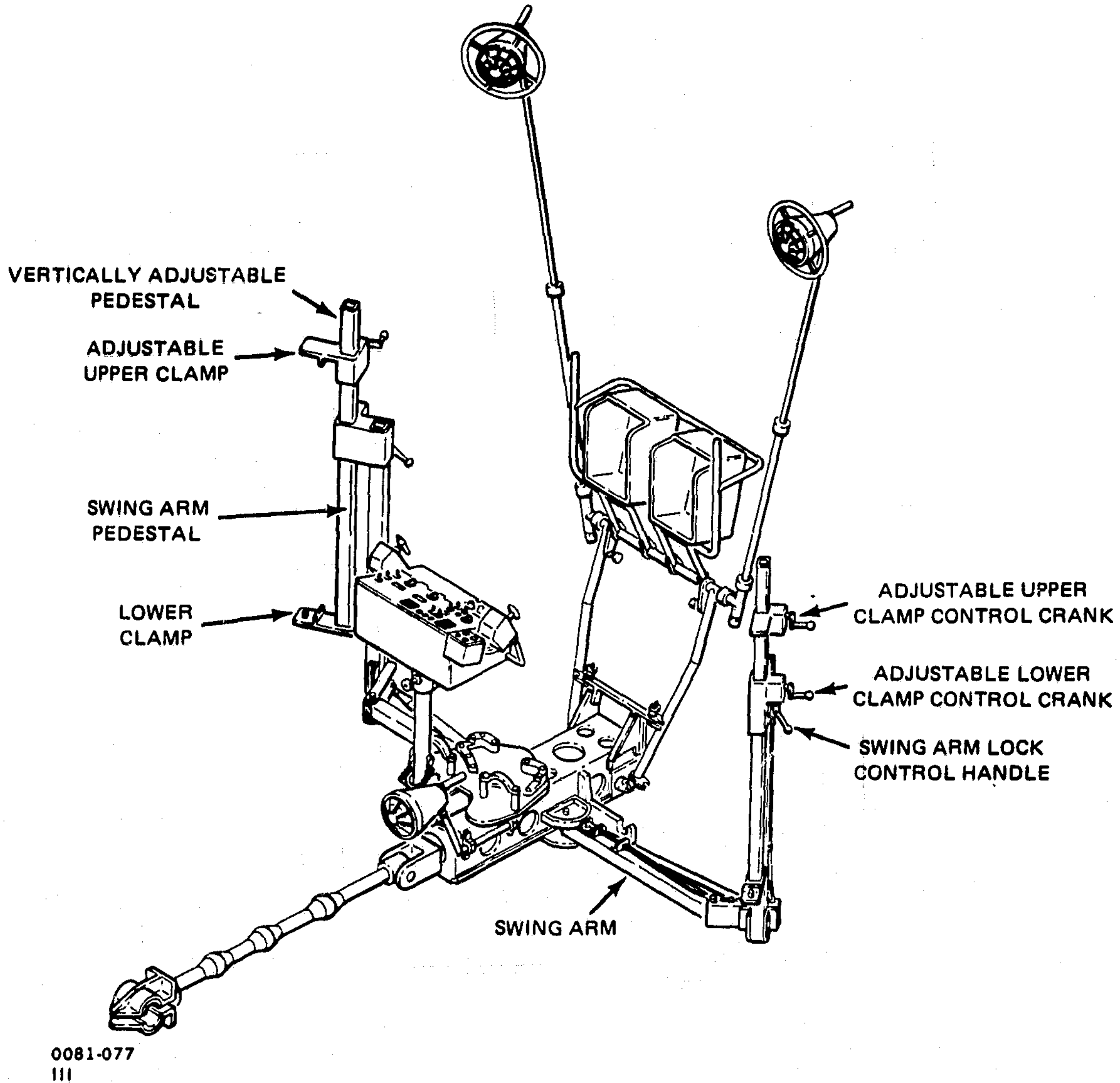

Figure 51. Payload Handling Device

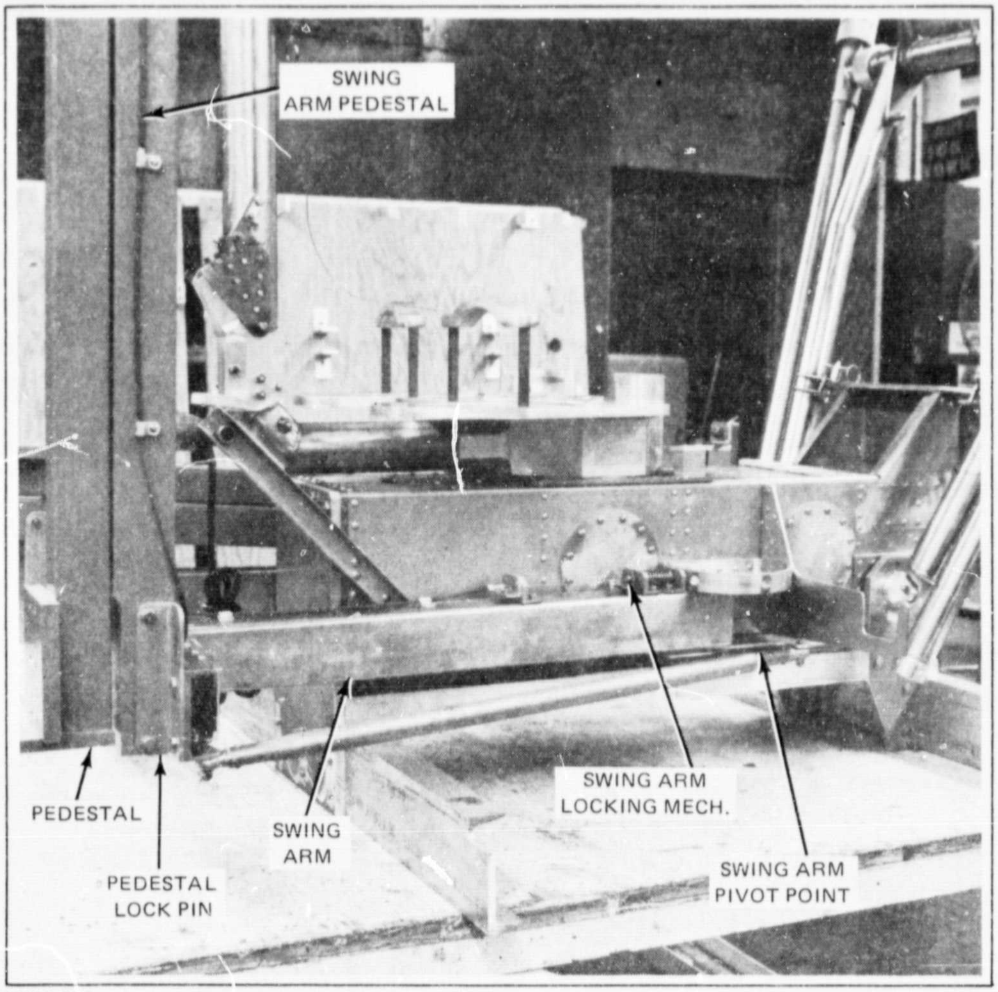

Figure 52. Payload Handling Device Assembly

6.1.8.2 Applicable Documents -

C76-200 DTA FINAL ASSY DWG

C76-220 PAYLOAD HANDLING DEVICE ASSY DWG

6.1.8.3 Deployment and Folding - To deploy the payload handlings devices from their folded position, the C&D pedestal and the light stanchions must be first deployed and locked in their operating positions. The swing arm pedestal is then rotated to the vertical position and the lock pin inserted in the swing arm pedestal bracket (Figures 51 and 52). The swing arm lock handle is rotated up to unlock the swing arm and the arm is rotated aft to its 90-deg position. To fold the payload handling device the above procedure is reversed. Before the swing arm pedestal is folded, the lower clamp control crank is rotated until the pedestal is in its lowest vertical position and the upper clamp control crank is rotated until the upper clamp is against the stop at the top of the pedestal.

6.1.8.4 Payload Interfaces - The upper clamp of the pedestal is adjusted vertically by rotating the upper clamp control crank. To attach a payload to the device, the payload is moved over the lower clamp until the payload is attached to the lower clamp. For some payloads this can be accomplished by a tapered pin on the lower clamp engaging a hole in the bottom of the payload. The upper clamp is then vertically adjusted so the upper clamp captures the payload.

6.1.8.5 Pedestal Vertical Adjustment - The vertical position of the pedestal can be adjusted relative to the swing arm pedestal by rotation of the lower clamp control crank and allows the DTA operator to adjust the vertical position of the interfaces for optimum alignment and translational clearances for the payload.

6.1.8.6 Saving Arm Position - The swing arm can be moved to three specific positions; operational for payload pickup (3°), stow for payload (25°), and offline line (90°) for payload stowage or payload replacement unit (Figure 51). The swing arm is unlocked by moving swing arm lock control handle up and rotating swing arm to desired position.

6.1.9 Manipulation System

6.1.9.1 General - The hydraulically powered manipulation system is initially activated at the test directors console; the manipulator arm is controlled and monitored in the direct drive and rate modes at the OCP Controls and Displays panel. The manipulation arm can also be controlled from the MDF operator's console in the direct drive and rates modes and in the replica mode at the replica controller.

6.1.9.2 Applicable Documents -

GENERAL DESCRIPTION (JSC 11029)
GENERAL OPERATING PROCEDURES (JSC 10843)
FAILURE MODE AND EFFECTS ANALYSIS (JSC 10882)
DETAIL PROCEDURES (JSC 10881)
C76-212 C&D PANEL ASSY DWG
C76-218 WIRING HARNESS ASSY DWG

6.1.9.3 Pre-Operation Requirements - The pre-operating procedures detailed in Section 204.3 for the MDF computer, Section 203.3 for the Air Bearing SLED, and Section 208.3 for the manipulator system, of JSC 10881 "Detail Procedures" shall be implemented before the OCP DTA/MDF system is activated. Select DTA control of manipulator system and insure that Shuttle operators console is deactivated and cannot control manipulator arm.

6.1.9.4 Manipulator System Activation -

1. Before manipulation system activation perform operational steps for air bearing sled outlined in Section 203.4 (JSC 10881)
2. Perform operational steps 1 through 3 for computer outlined in Section 204.4 (JSC 10881)
3. Perform operation steps for manipulator system activation outlined in Section 208.4 (JSC 10881)
4. Turn on MRWS Power Switch S-14 (Figure 15)
5. Place switch S-11 in TEST position and insure all caution and warning, mode, master alarm, in progress annunciators are lit, master alarm is sounding and digital indicators display + 8.8.8.8

6. Select VAR position on switch S2 and rotate switch R1. The brightness of all annunciator lights, digital indicators and master alarm light should vary as R1 knob is rotated

7. Turn on switch R2 and rotate knob. The integral panel lighting and elect/mech flags intensity should vary as the switch knob is rotated

8. Turn on switches A4, A5, and A6 and verify all flood lights work. Vary the intensity of each light by rotating corresponding switch knob. Turn all lights off.

9. Initiate DTA/MDF interface test to verify that all DI's and DO's between the DTA and the computer RTP are operating.

6.1.9.5 Manipulator Arm Control -

Manual Augmentation Mode (Rate)

1. Perform all steps in Paragraph 6.1.9.4

2. Place mode selection switch S-10 in the END EFF position and press enter button S-9. END EFF annunciator DS-10 should light up

3. Place RMS power switch S-15 in PRIMARY position

4. Place rate selection switches S-3 and S-4 to speed desired and check that ELECT/MECH FLAGS, DS-7 and DS-9 indicate speed selected

5. Depress Manipulator run and computer run buttons. Annunciator lights should be on

6. Manipulate the rotational and translational hand controllers to move the DTA along the reference system selected

7. The operator can command rate hold by depressing the maintain on/off button on the rotational hand controller. ELECT/MECH FLAG DS-8 should indicate on. By depressing the button again, rate hold is deactivated and flag DS-8 should indicate off

8. Other manual augmentation mode reference systems can be selected by positioning mode selection switch S-10 in ORB, MIX or PL positions in step 2, and repeating above procedure.

Direct Drive Mode

1. Perform all steps in Paragraph 6.1.9.4
2. Place mode select switch S-10 in SINGLE position and press enter button S-9. Annunciator light DS-10 SINGLE should go on.
3. Place RMS power switch S-15 in PRIMARY position
4. Place rate control switches S-3 and S-4 to speed desired and check that ELECT/MECH FLAGS DS-7 and DS-9 indicate speed selected
5. Depress manipulator run and computer run buttons and check annunciator lights go on
6. Select joint to be driven by use of joint switch S-12 and drive direction by switch S-13, SINGLE/DIRECT
7. If DIRECT mode is selected on switch S-10 the brakes on switch S-6 must be activated and the above steps repeated.

6.1.9.6 Manipulator System Deactivation -

Emergency Deactivation

To deactivate the manipulator system in an emergency situation perform the following operations:

- Depress COMP FREEZE pushbutton on DTA C&D panel or test directors panel
- Depress MANIP STOP pushbutton on DTA C&D panel or test directors panel.

Normal Deactivation

1. Move DTA to "parked" position on air bearing floor
2. Depress COMP FREEZE button on DTA or Test Directors Panel
3. Turn off RMS power switch S-15
4. Turn off MRWS power switch S-14
5. Depress MANIP STOP button on DTA or Test Directors Panel.

6.1.9.7 Post-Operation Requirements - The post operation procedures detailed in Section 208.8, 203.5 and 204.5 of JSC 10881 shall be performed.

6.1.10 Air Bearing Sled

The operational procedures for the air bearing sled are covered in Section 203 of JSC document 10881 and shall be complied with when operating the DTA mounted on the sled.

6.1.11 Intercom/PA System

The operational procedures for the intercom/PA system in the MDF are covered in Section 205 of JSC document 10881. A headset jack is provided on the DTA C&D panel for use by the DTA operator and is connected to the MDF intercom system.

6.1.12 Computer

The operational procedures for the computer system are covered in Section 204 of JSC document 10881 and shall be complied with when operating the DTA attached to the manipulator arm.

6.2 INTEGRATION AND CHECKOUT PROCEDURES

The integration and checkout procedures for the DTA assembly and the integrated DTA/MDF are contained in Subsection 5.1 of this volume in the Integration and Checkout Plan. They are broken down into three phases:

- Component/subsystem bench-type tests (Para. 5.1.1)
- DTA Assembly, Integration and Checkout at Grumman (Para. 5.1.2)
- DTA/MDF Integration and Checkout (Para. 5.1.3).

6.3 OCP MAINTENANCE PLAN AND PROCEDURES

6.3.1 Visual Inspection

A visual inspection is performed on all OCP equipment by the Facility Operations Engineer prior to each MDF test. All discrepancies are noted and all faulty equipment replaced or repaired as required.

6.3.2 Maintenance Logs

A maintenance log is kept on all OCP operating equipment and contains the following information for each item of equipment:

- Description of equipment (title, name)
- Reason for maintenance and/or inspection, whether periodic check or malfunction, or pre-test check
- Date of maintenance and/or inspection
- Description of maintenance/inspection performed
- Signature of individual who performed maintenance/inspection
- Signature of individual who certified maintenance/inspection was performed properly.

6.3.3 Periodic Inspection/Maintenance

Periodic inspection/maintenance is performed on the following OCP operating equipment as outlined below:

- C&D Pedestal lock mechanisms
- Foot Restraint lock mechanism
- Payload Handling lock mechanism
- C&D displays and controls.

The MDF facility operating and support equipment maintenance plan and procedures are contained in JSC 10843, Revision A, and JSC 10881. The OCP procedures are compatible with the JSC MDF procedures and the OCP maintenance cycle can be incorporated into the present MDF maintenance schedule. The OCP maintenance logs format is the same as the MDF logs.

6.3.3.1 Periodic Inspection (Monthly) -

1. Place sign "Danger - DO NOT OPERATE" on test directors console

2. Unlock, deploy, and fold the following equipment of the DTA:

   - C&D Pedestal
   - Light Stanchions
   - Payload Handling Devices
   - Tool Bins.

   Check that all lockpins are removed and inserted with minimum effort and do not bind in their locking holes. All motions shall be free and smooth with no binding or rough movement

3. Check nuts, bolts, and screws for proper torque and tighten if necessary

4. Inspect electrical cables for damage and wear and loose tie down clamps

5. Unlock and extend telescoping tubes of light stanchions and relock. Knurled knobs shall lock and unlock with minimum effort and shall retain tubes in positions selected

6. Unlock C&D pedestal and move to various operating and off-line positions. Latch handle should require minimum effort for unlocking pedestal; pedestal shall move freely. Check operation of vertical height adjusting mechanism

7. Unlock and adjust upper clamp, pedestal and swing arm of the payload handling device. All adjusting cranks shall rotate freely and motion shall be smooth

8. Unlock and rotate foot restraint platform. Latch mechanism shall not bind and platform shall rotate freely

9. Lamp fixture swivel pivot friction shall be adjusted so that the lamp fixture will remain in orientation selected

10. The C&D displays and controls operation are checked out prior to each test.

All discrepancies are noted in the maintenance logs and part replaced or repaired immediately.

6.3.3.2 Periodic Maintenance (Every 6 Months) - **The following mechanisms of the OCP DTA require periodic lubrication (Figure 53):**

- PHD pedestal gear rack teeth and gear boxes
- PHD swing arm lock mechanism and gear box
- PHD swing arm pivot points
- Foot Restraint latching mechanism
- C&D pedestal rotational bearing
- C&D pedestal rotational latching mechanism
- C&D pedestal off-line locking mechanism
- C&D console vertical height adjusting mechanism.

Figure 54 indicates by an asterisk (*) all the points that must be lubricated for the payload handling device. All points shall be inspected for adequate lubrication and re-lubricated if necessary.

Figure 55 also indicates by an asterisk (*) all the lubrication points for C&D console and pedestal assembly and the foot restraint assembly. Again all points shall be inspected for adequate lubrication and re-lubricated if necessary. A good grade lubricant like MIL-G-23827, general purpose grease shall be used. Excess grease shall be cleaned from parts. If lubrication points contain dirt or metal particles, they shall be cleaned first in a suitable solvent, wiped dry with a clean rag and then re-lubricated.

Consult Subsection 6.6 for disassembly and assembly procedures for the various elements of the OCP-DTA, requiring disassembly for maintenance.

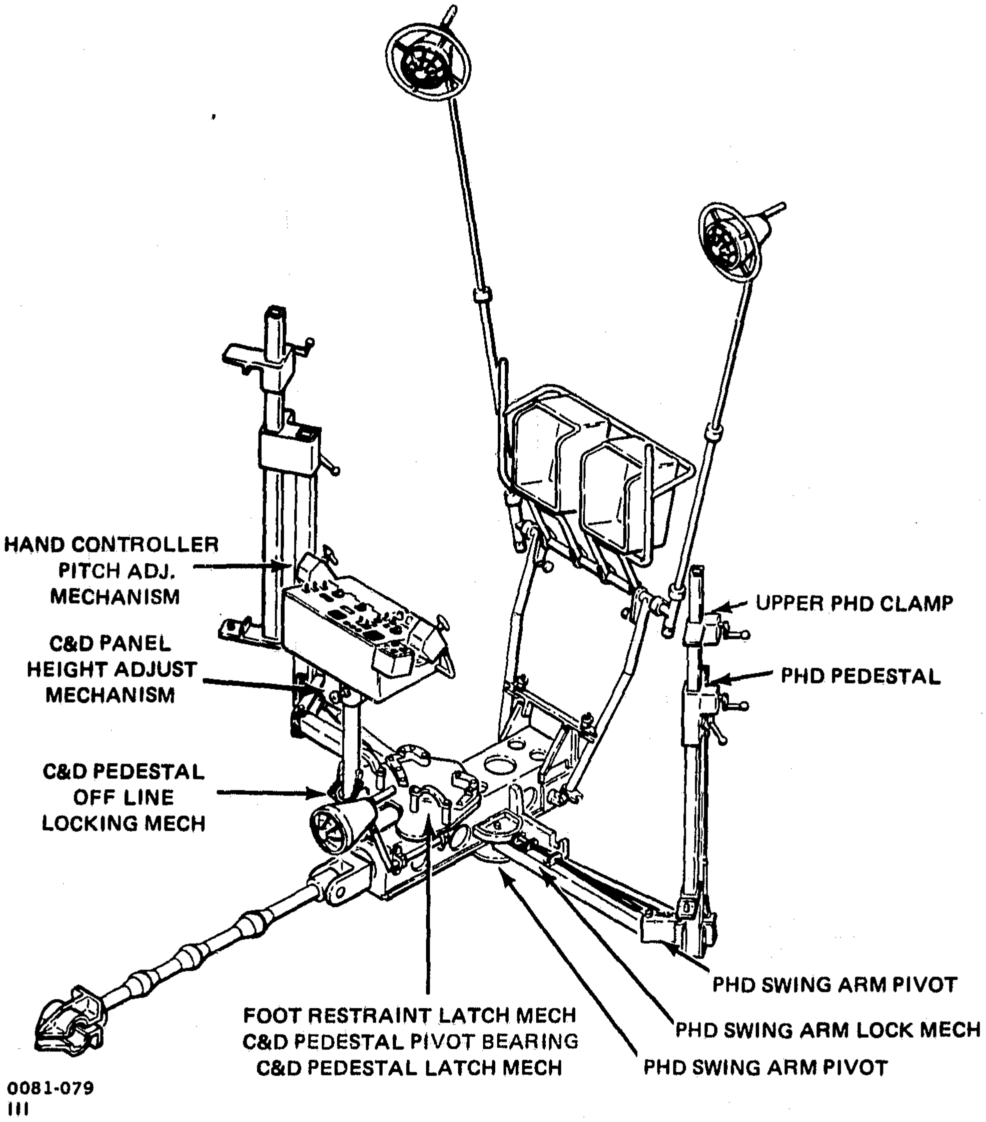

Figure 53. OCP-DTA Lubrication Diagram

REPRODUCIBILITY OF THE ORIGINAL PAGE IS POOR

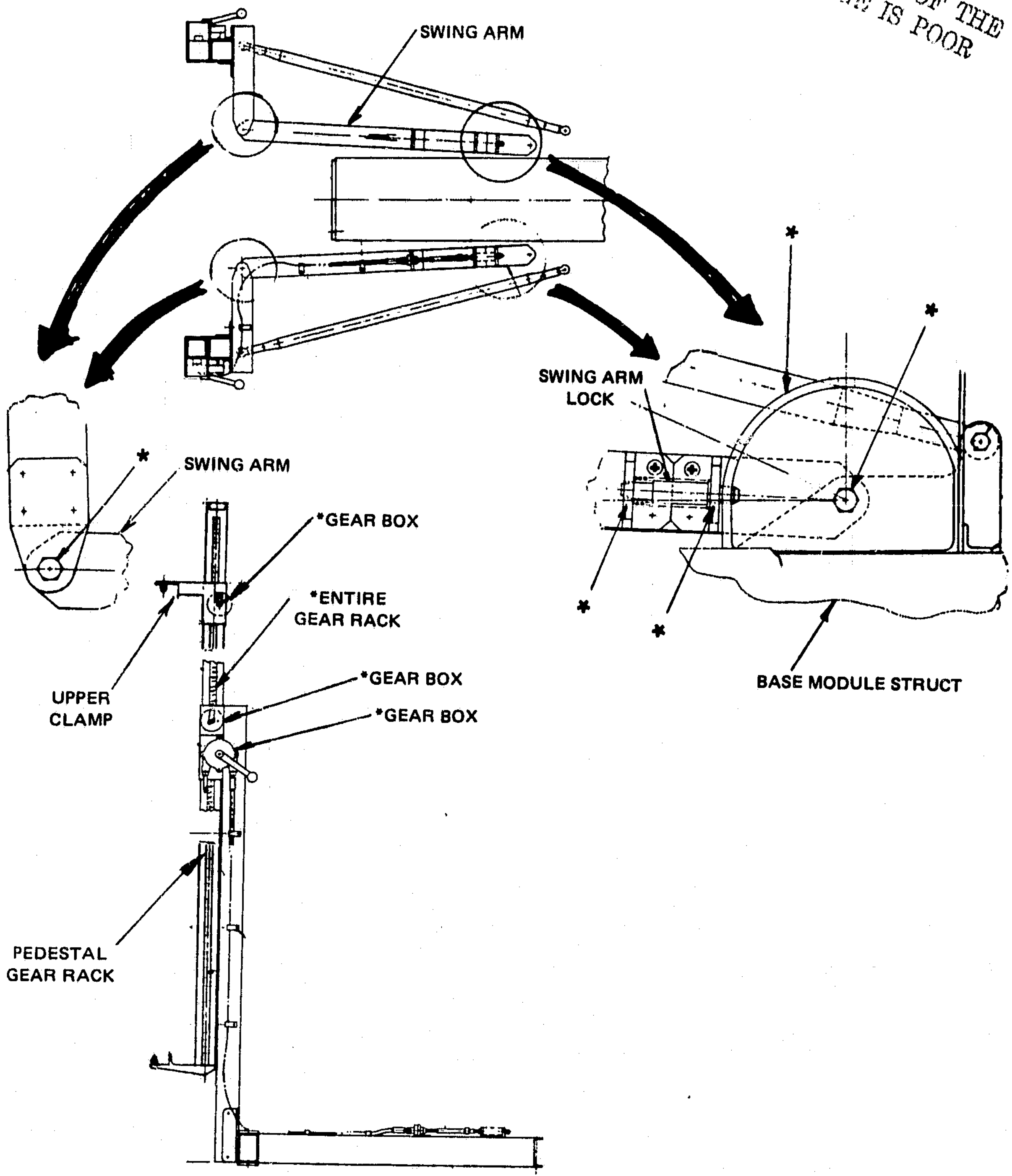

0081-080
III

Figure 54. PHD Lubrication

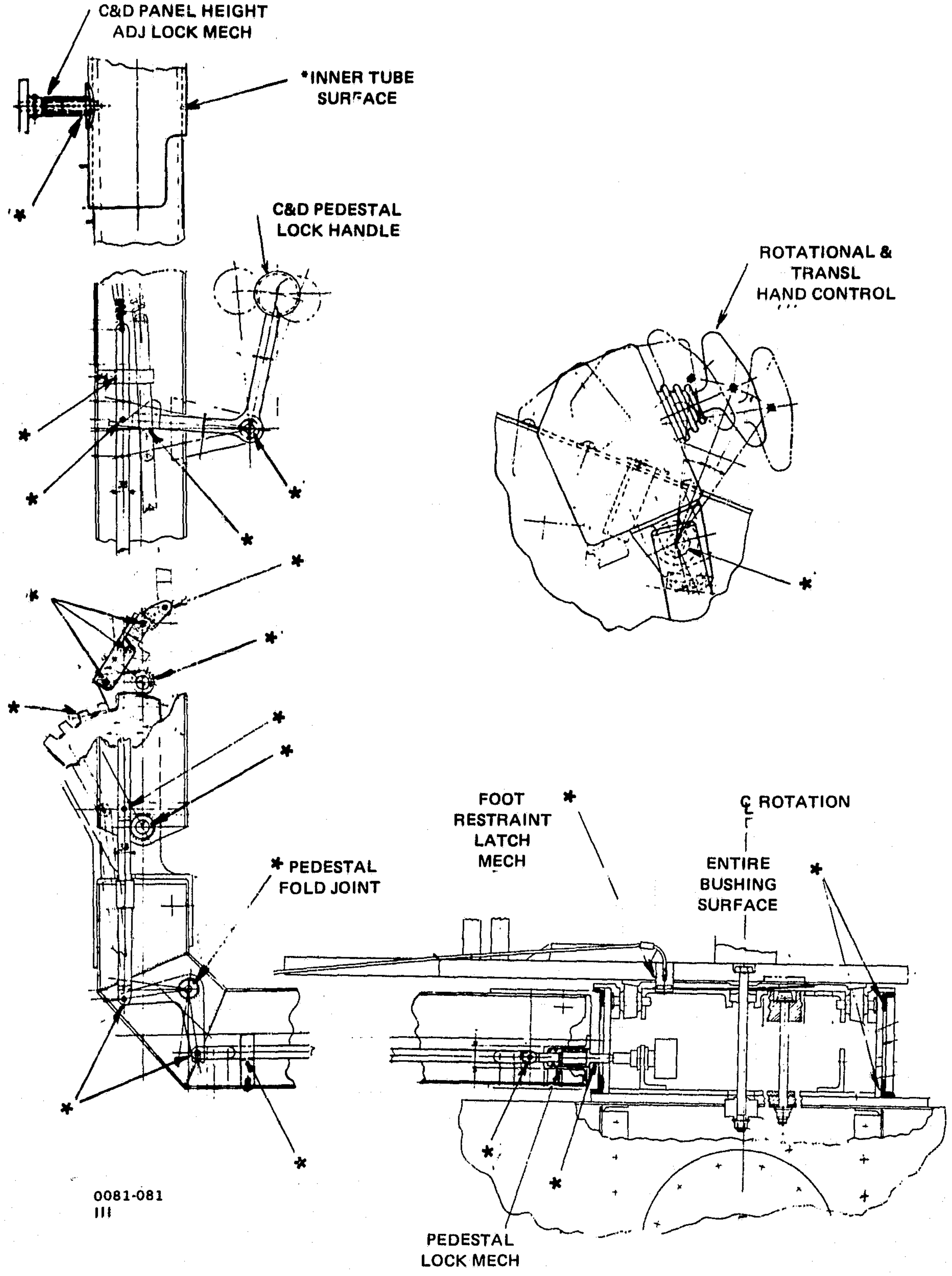

Figure 55. C&D Pedestal Lubrication

6.4 SAFETY PLAN

The safety plan implemented for the present MDF facility, Section 9 JSC 10843, Revision A is applied to the OCP, and includes the following:

6.4.1 Equipment Safety Check

- Modifications required due to safety considerations shall be implemented immediately
- All new equipment designs with a potential for creating a hazardous condition shall be reviewed
- Prior to test all equipment shall be checked in accordance with approved checklists
- Maintenance procedures developed to insure all equipment is in proper working order for all test exercises.

6.4.2 Procedure Approval

- All test procedures approved by MDF Test Director prior to use in MDF
- All emergency, operating, maintenance safety procedures reviewed every 12 months for familiarization and compliance with current practices.

6.4.3 Periodic Reviews

Periodic reviews are made by a representative of the Operations Safety Branch in an effort to prevent possible injury to personnel and/or damage to equipment in event of systems failure or malfunction (Reference MDF Detail Procedure - JSC 10881).

6.4.4 Operational Hazard Assessment

An operational hazard assessment was made of the OCP to identify failures that could result in actual or potential hazards to personnel and equipment.

The failure analysis evaluated the mechanical, electrical, and control systems of the OCP-DTA and support equipment. Indicator lamps, circuit breakers and C&W displays that are incorporated for safety purposes were excluded from the analysis. Also, the manipulator used in the MDF is excluded because failures have previously been analyzed in JSC Document 10882, "FMEA." OCP failures were postulated and listed in Table 2. The effect of the failure on the operator or equipment is stated and

TABLE 2

OCP-DTA OPERATIONAL HAZARDS ASSESSMENT (SHEET 1 OF 3)

HAZARDOUS CONDITION	HAZARD CAUSE	HAZARD EFFECT	CORRECTIVE ACTION	ASSESSMENT
COLLAPSE OF C&D CONSOLE SUPPORT	POSITIONING LATCH FAILURE	IMPACTS STABILIZER	CEASE TEST OPERATIONS AND IMPLEMENT REPAIR	CONSOLE UNLIKELY TO FAIL AS DESIGNED FOR 3.7 g
STABILIZER UNCONTROLLED MOVEMENT (ELECTRO/MECHANICAL)	CONTROLLER COMMAND WITH NO OPERATOR INPUT	STABILIZER DAMAGES TEST STRUCTURE AND/OR MOVES PLATFORM	COMMAND OPPOSITE MOVEMENT AND/OR DEACTIVATE STABILIZER	STABILIZER UNLIKELY TO BE DAMAGED, BUT TEST EQUIPMENT COULD BE, DEPENDING ON SPEED OF UNCONTROLLED MOVEMENT
POWER FAILURE	DTA SUPPLY FAILURE DUE TO WIRE DISCONNECTION AT OCP	SIMULATED CONSTRUCTION OPERATIONS ABRUPTLY TERMINATED	OPEN DTA CIRCUIT BREAKERS & PROVIDE TEMPORARY SUPPORTS TO EQUIPMENT BEING HANDLED	IMPACT DEPENDENT ON CONSTRUCTION OPERATION SEQUENCE WHEN FAILURE OCCURS
FAILURE OF TEST STRUCTURE SUPPORT	SUPPORT STRUCTURE FAILS DUE TO EXTERNAL CAUSE	TEST STRUCTURE DROPS ON DTA	DEACTIVATE DTA	OPERATORS COULD BE HURT SUPPORT STRUCTURE DESIGNED FOR TBD LOADS
LOSS OF SUIT AIR SUPPLY	FACILITY PUMP FAILURE OR HOSE BLOCKAGE/LEAKAGE	OPERATOR IN JEOPARDY	ATTACH PORTABLE AIR SUPPLY	DANGER TO OPERATOR MINIMAL PROVIDING PROMPT ACTION TAKEN
LOSS OF SUIT LIQUID COOLING	FACILITY PUMP FAILURE OR HOSE BLOCKAGE/LEAKAGE	OPERATOR DISCOMFORT	ATTACH PORTABLE LIQUID COOLING	TESTING MAY CEASE DEPENDING ON OPERATOR WORK LOAD
FAILURE OF RESTRAINT SYSTEM	EXCESSIVE LOADS CAUSES FAILURE	OPERATOR LOSES BALANCE AND FALLS	CEASE TEST OPERATIONS & IMPLEMENT REPAIR	OPERATOR COULD BE HURT AS HIS SHOES ARE FASTENED TO BASE. UNLIKELY AS SUPPORT DESIGNED FOR 4.5 g

0081-082(1)
III

TABLE 2

OCP-DTA OPERATIONAL HAZARDS ASSESSMENT (SHEET 2 OF 3)

HAZARDOUS CONDITION	HAZARD CAUSE	HAZARD EFFECT	CORRECTIVE ACTION	ASSESSMENT
INTERCOM LOSS	MDF CABLE OPEN CIRCUIT	TERMINATION OF TEST OPERATIONS	CEASE TEST OPERATIONS AND IMPLEMENT REPAIR	DELAY OF TESTS, NO DANGER TO PERSONNEL
LOSS OF AIR BEARING	AIR SUPPLY ON DIAPHRAM FAILS	ATTEMPT STOP OF PLATFORM	CEASE TEST OPERATIONS AND IMPLEMENT REPAIR	WAIST RESTRAINT SHOULD PREVENT DAMAGE TO OPERATOR
OCP ILLUMINATION TERMINATED	MDF CABLE OPEN CIRCUIT	TERMINATION OF TEST OPERATIONS	CEASE TEST OPERATIONS & IMPLEMENT REPAIR	TESTS DELAYED, NO DANGER TO PERSONNEL. DURING SIMULATED DAYLIGHT OPS FACILITY LIGHTING ADEQUATE FOR TERMINATION PROCEDURES & DURING NIGHT OPS FACILITY LIGHTS COULD BE ACTIVATED.
ROTATING FOOT PLATFORM IMMOBILE	RELEASE LOCK PAWL FAILURE	TERMINATION OF TEST OPERATIONS	CEASE TEST OPERATIONS & IMPLEMENT REPAIR	TESTS DELAYED, NO DANGER TO PERSONNEL
FOOT RESTRAINT FAILURE	TOE STRAP OR HEEL CLAMPS BREAKS	DAMAGE TO SHOE	STOP TEST, SHUTDOWN TEST EQUIPMENT & REPAIR FOOT RESTRAINT	OPERATOR WOULD NOT FALL DUE TO WAIST SUPPORT. FAILURE UNLIKELY BECAUSE FOOT RESTRAINT DESIGNED FOR 140 LB TENSION SHEAR & 1800 IN LB TORSION
COLLAPSE OF LIGHTING & TOOL BOX STANCHION	POSITIONING LATCH FAILURE	TOOL BOX COULD STRIKE FACILITY AIR BEARING STRUCTURE	STOP TEST, SHUTDOWN TEST EQUIPMENT REPAIR STANCHION	DAMAGE MINIMIZED TO AIR BEARING STRUCTURE, FAILURE UNLIKELY BECAUSE STANCHION DESIGNED FOR 3.7 g

0081-082(2)
III

TABLE 2

OCP-DTA OPERATIONAL HAZARDS ASSESSMENT (SHEET 3 OF 3)

HAZARDOUS CONDITION	HAZARD CAUSE	HAZARD EFFECT	CORRECTIVE ACTION	ASSESSMENT
ROTATING FOOT PLATFORM FIXTURE	BEARING STRUCTURAL COLLAPSE	OPERATOR LOSES BALANCE AND FALLS	STOP TEST, SHUTDOWN TEST EQUIPMENT	OPERATOR COULD BE HURT DUE TO FALLING ON AIR BEARING STRUCTURE. UNLIKELY BECAUSE BASE DESIGNED FOR VERTICAL LOAD OF 375 LB (MF=2)
OPERATOR INCAPACITATED	OPERATOR COLLAPSES DUE TO UNKNOWN CAUSES	FURTHER INJURY TO OPERATOR POSSIBLE	CEASE TEST OPERATIONS & ASSIST OPERATOR	MANIPULATOR & POWER CAN BE CONTROLLED FROM TEST OPERATORS CONSOLE PERMITTING STOPPING OF ALL ACTIVITY

0081-082(3)
III

each failure is assessed for impact. The operator safety restraint system installed specifically for safety on the DTA prevents most hazards from injuring the operator. Two hazardous conditions that potentially impact the operator are failure of the rotating foot platform and collapse of test structure supports.

6.4.5 Test Rules

The test rules established for the MDF and compiled in Section 11.0 of JSC document 10843, Revision A, shall apply when the OCP is operating in the MDF facility. The present JSC-MDF procedures and test rules will have to be revised to incorporate rules and procedures for an OCP operator wearing a modified EMU suit while performing tests in the MDF.

6.5 SIMULATION TEST PROCEDURES

The step-by-step procedures for conduction of simulation tests will be contained in each individual test request as outlined in Subsection 5.2.

6.6 PRE-TEST AND POST-TEST CHECKLISTS

Pre-test and post-test checklists will be accomplished by the Test Director, Test Conductor, Operations Engineer, Computer Engineer, and Television Engineer. All personnel will abide by the requirements cited in Section 11.0 (Test Rules) of the MDF General Operating Procedures (JSC 10843). Each item in the checklist will be verified; if an item is not applicable to the test (e.g., air bearing equipment not required), the item will be noted as N/A (not applicable). Each checklist shall be signed and dated by the applicable test team individual.

Facility Test Team Personnel

The facility test team consists of the following personnel:

- Test Director - provides overall control of the Facility during test operations
- OCP Operator - operates the OCP/DTA during a test
- Test Conductor - briefs test team personnel on requirements of a test, reads test procedures, and records OCP Operator comments
- Computer Engineer - initializes required computer test programs and monitors computer operations during tests
- Operations Engineer - performs pretest checkout of all electrical, mechanical, and hydraulic systems and monitors the systems during a test
- TV Engineer - monitors operation of the CCTV during a test.

6.6.1 Test Director

6.6.1.1 Pre-Test Checklist -

1. Test Readiness Review completed ____________
2. Test team personnel certified for test operations ____________
3. Test team personnel briefed on test requirements ____________
4. DTA/MDF configured to test plan requirements ____________
5. MDF restraining ropes in place ____________
6. Doors at north end of Building 9A locked ____________
7. Test team briefed on safety aspects ____________
8. MDF area clear of unauthorized personnel ____________
9. All pretest checks accomplished and received:

Position	Name	
a. Test Conductor	____________________	____________
b. Operations Engineer	____________________	____________
c. Computer Engineer	____________________	____________
d. Television Engineer	____________________	____________

____________________ ____________

Test Director Signature Date

6.6.1.2 Post-Test Checklist -

1. Test plan accomplished ________
2. Test equipment deactivated and secured ________
3. Anomalies recorded and logged ________
4. Maintenance requirements recorded ________
5. All post-test checks accomplished and received:
   a. Test Conductor ________
   b. Operations Engineer ________
   c. Computer Engineer ________
   d. Television Engineer ________
6. Test team personnel debriefed ________
7. MDF restraining ropes removed ________
8. Doors at north end of Building 9A unlocked ________

________________ ________

Test Director Signature — Date

6.6.2 Test Conductor

6.6.2.1 Pre-Test Checklist -

1. Test procedures submitted ________
2. Test personnel briefed on test procedure ________

________________________ ________
Test Conductor Signature Date

6.6.2.2 Post-Test Checklist -

1. Test data recorded ________
2. Anomalies noted and recorded ________
3. Test plan accomplished ________
4. Test personnel debriefed ________

________________________ ________
Test Conductor Signature Date

6.6.3 Operations Engineer

6.6.3.1 Pre-Test Checklist -

1. DTA/MDF test and support equipment configured and operationally verified per test plan requirements:
   a. Intercom and PA system ________
   b. Air bearing equipment ________
   c. Auxiliary support equipment ________
2. Maintenance requirements recorded ________
3. Verify monthly inspection performed ________
4. Manipulator system operational:
   a. DTA Rotational and translational hand controllers ________
   b. Manipulator arm operational in rate mode(s) ________
   c. Test Director console C&D ________
   d. OCP Operator console C&D ________

____________________ ________

Operations Engineer Signature Date

6.6.3.2 Post-Test Checklist -

1. DTA/MDF test and support equipment deactivated and secured:
   - a. Intercom and PA system ________
   - b. Air bearing equipment ________
   - c. Auxiliary support equipment ________
2. Manipulator system deactivated and secured:
   - a. Manipulator arm stowed ________
   - b. Test Director's console (console keys secured) ________
   - c. OCP Operator's console ________
3. Equipment maintenance recorded ________

________________________ ________

Operations Engineer Signature Date

6.6.4 Computer Engineer

6.6.4.1 Pre-Test Checklist -

1. Computer console activated and operational ________
2. Teletype and ancillary equipment operational ________
3. Computer loaded and verified with applicable software per test requirements ________

____________________ ________
Computer Engineer Signature Date

6.6.4.2 Post-Test Checklist -

1. Computer system deactivated and secured ________
2. Teletype and ancillary equipment secured ________
3. Computer console key secured ________
4. Data results recorded ________

____________________ ________
Computer Engineer Signature Date

6.6.5 Television Engineer

6.6.5.1 Pre-Test Checklist -

1. CCTV activated and operational (console C&D) ________
2. Cameras and monitors operational ________
3. TV recording facilities operational ________

________________________ ________
Television Engineer Signature Date

6.6.5.2 Post-Test Checklist -

1. CCTV console deactivated and secured ________
2. TV data recorded ________

________________________ ________
Television Engineer Signature Date

6.7 ASSEMBLY PROCEDURES

The assembly procedures describe the step-by-step assembly operations that are necessary to assemble the various elements of DTA. The procedures encompass only the elements of the DTA that are assembled together by bolts, screws, nuts, and cotter pins. Figures 56 and 57 show the various elements and hardware necessary to assemble the OCP-DTA and the sequence of assembly. Parts requiring lubrication should be lubricated on assembly (see Subsection 6.3).

6.7.1 Payload Handling Device (Procedure for LH ASSY, RH ASSY similar)

The following engineering drawings are applicable to the manufacture and assembly of the Payload handling device:

C76-220	PHD ASSY & INSTAL
C76-222	LINKAGE ASSY
C76-223	PEDESTAL ASSY
C76-229	CONTROLS
Figure 56	

6.7.1.1 Swing Arm Assembly - 1. Install spring (2) and pin (1) between brackets (3) and (4) and fasten brackets (3) and (4) to swing arm (5) with screws, lockwashers, and washers. The two legs of bracket (3) and (4) should butt against each other to obtain proper spring preload.

2. Fasten bracket (6) to top of swing arm (5) and bracket (7) to the side of swing arm (5) with screws, lockwashers, and washers.

3. Fasten brackets (8) to swing arm (5) with screws, washers, and lockwashers. Assemble latch arm between brackets (8) and install bolt, nut, washers, and cotter pin in lower hole in brackets (8). Install clevis bolt and cotter pin in upper hole of brackets (8) and attach spring between clevis bolt and hole in top of latch arm (9).

4. Attach swingarm (5) and pushrod (12) with bolt, washer, nuts, and cotter pin to link assy (11).

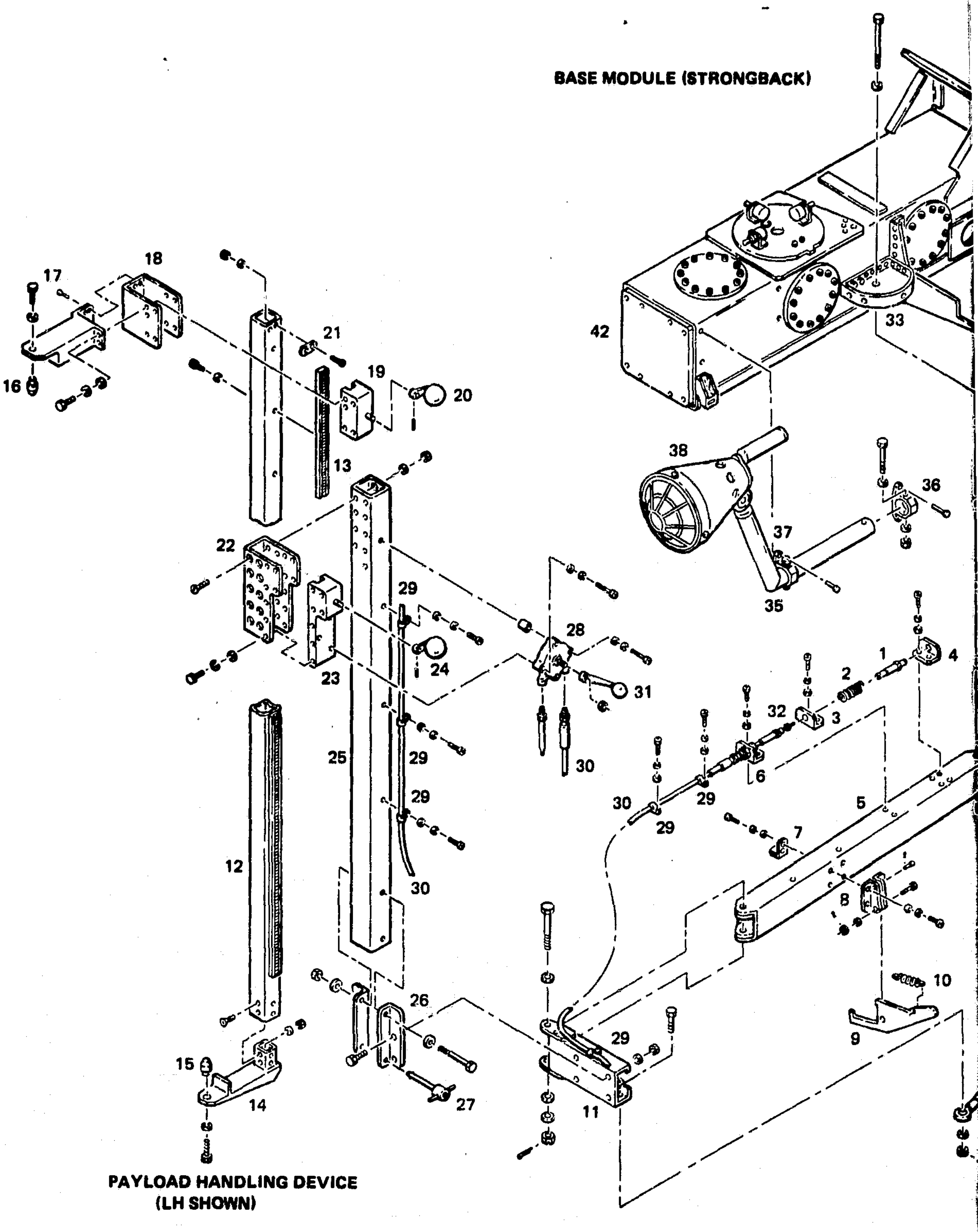

0081-083
III

FOLDOUT FRAME 1

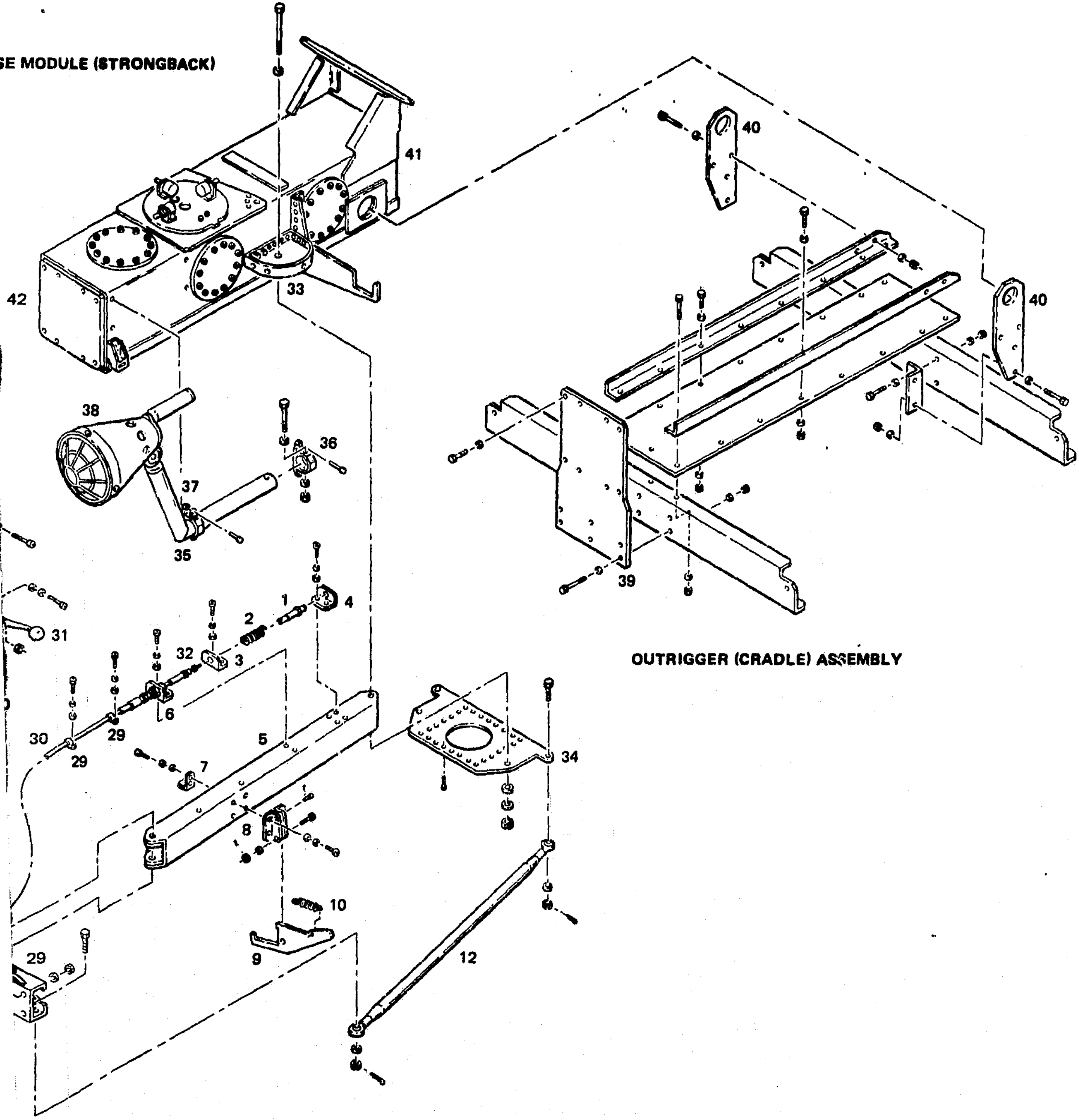

Figure 56. Payload Handling Device, Forward Light, and Outrigger Assembly Parts Breakdown

FOLDOUT FRAME 2

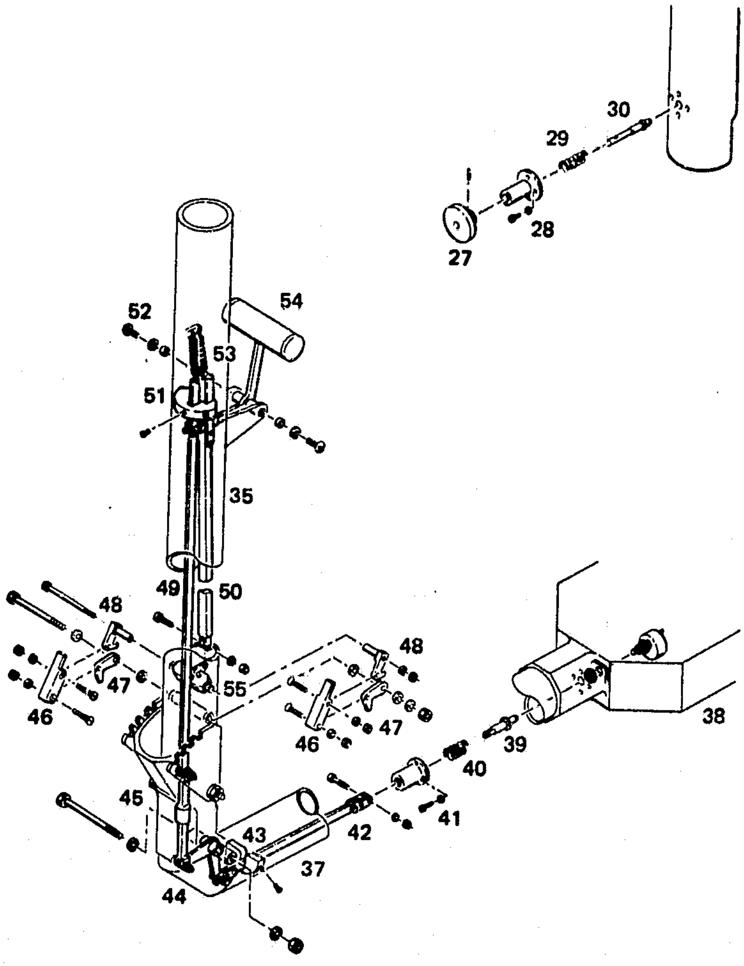

CONSOLE ACTUATION MECHANISM

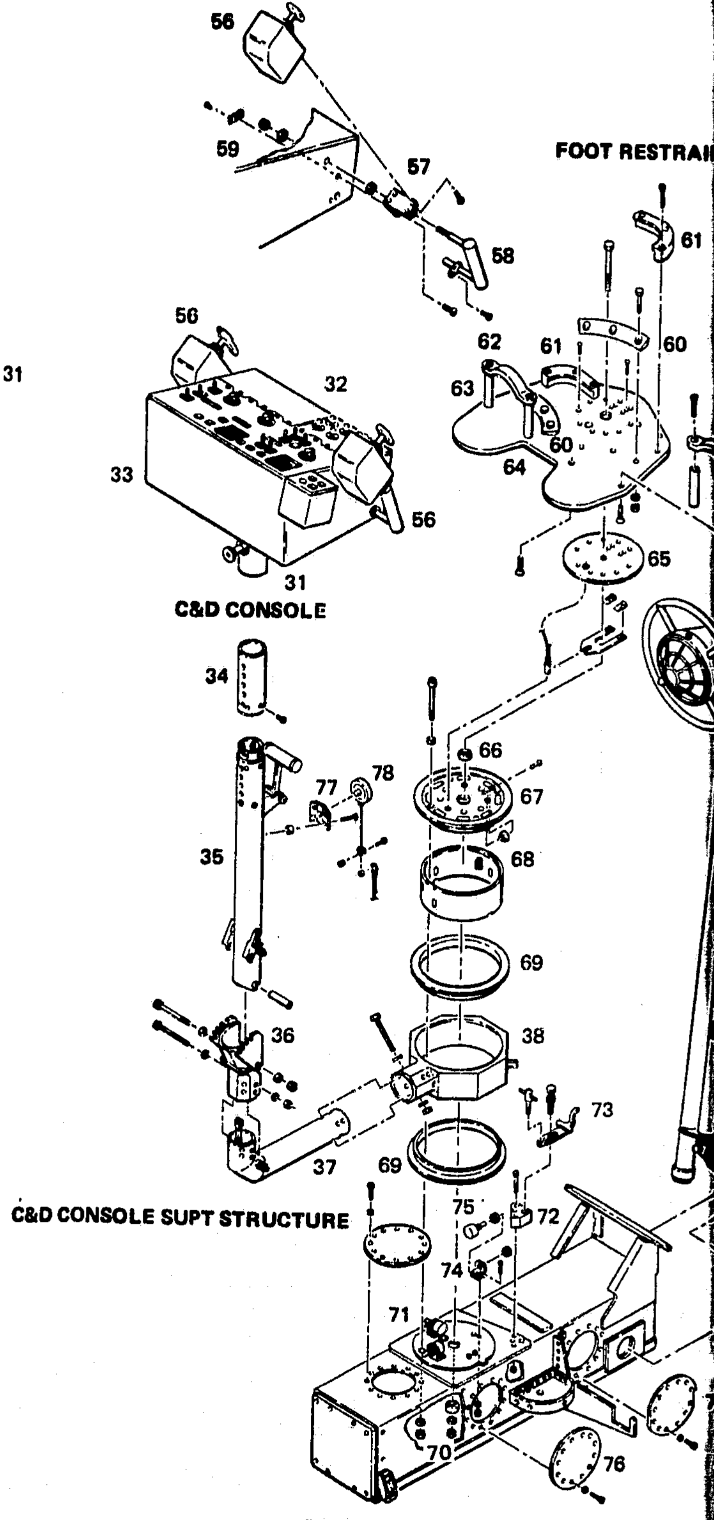

C&D CONSOLE

C&D CONSOLE SUPT STRUCTURE

BASE MODULE (STRONGBACK)

0081-084
III

FOLDOUT FRAME

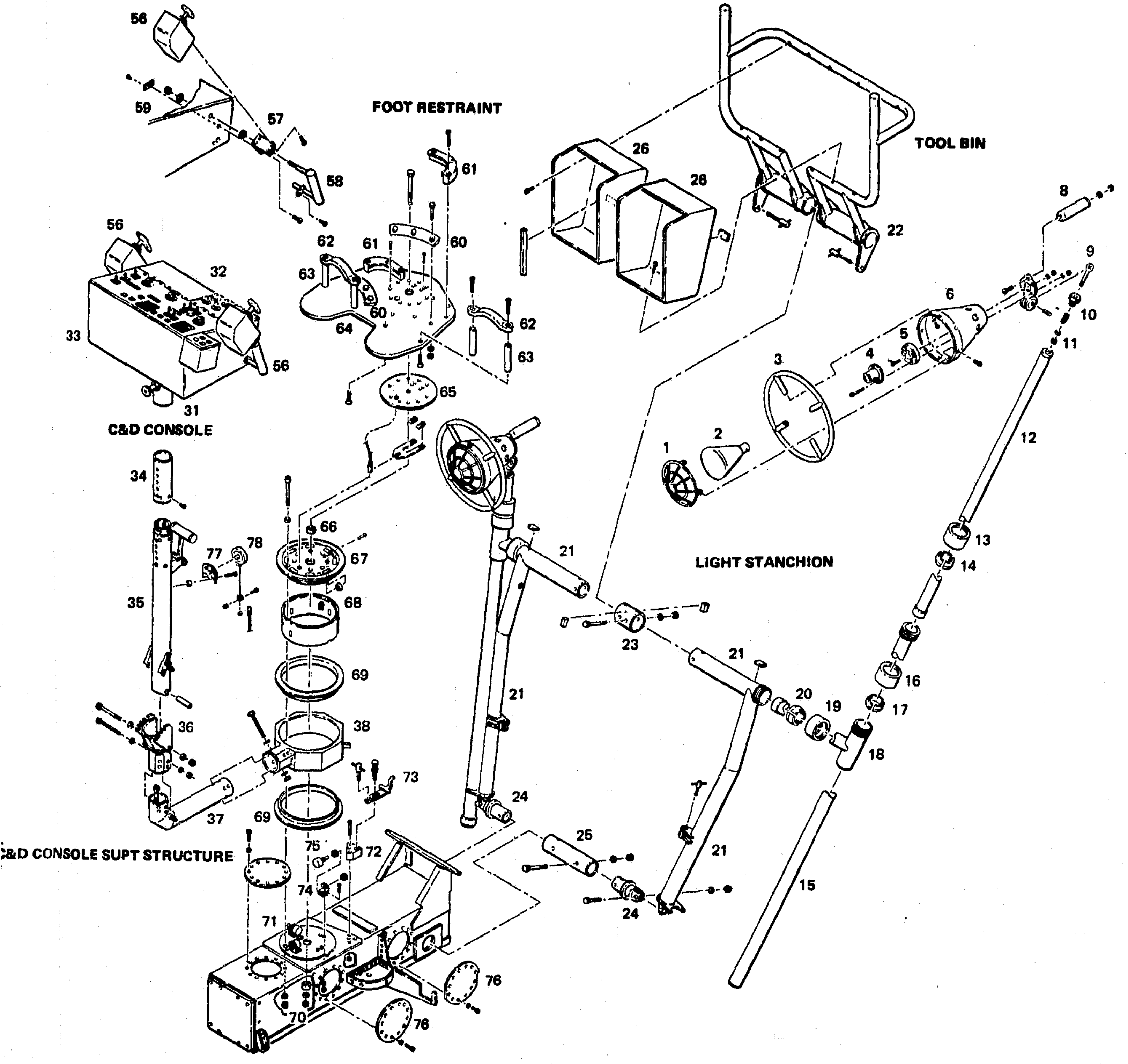

Figure 57. Light Stanchion, Tool Bin, Foot Restraint, C&D Console, and Base Module Parts Breakdown

FOLDOUT FRAME
2

6.7.1.2 Pedestal Assembly -

1. Bolt gear rack (13) to post (12). Bolts are inserted through 5/8-diameter holes in opposite side of post.

2. Insert clamp (14) in bottom of post (12) and fasten with screws, washer, and nuts.

3. Insert guide (15) in hole in top of clamp (14) and bolt to clamp.

4. Insert guide (16) in bottom on hole in clamp (17) and bolt to clamp.

5. Clamp (17) is riveted to cover (18).

6. Assemble (12) post between sides of cover (18) and insert gear box (19). Insert bolts through cover (18) and gear box (19) and fasten together ensuring gear box pinion engages rack teeth on post (12).

7. Attach handle ball (20) with bolt to gear box crank (19).

8. Fasten stop (21) with screws to the top of post (12).

9. Fasten cover (22) to part (25) with c'sunk screws. Nuts for screws have to be inserted in 1/2 diameter access holes in rear of part (25). Insert post (12) in between cover (22) and bolt gear box (23) to cover (22) insuring that gear box pinion gear engages rack on part (12). Fasten gear box handle (24) with bolt to gear box crank.

10. Bolt (25) part to angles (26) and insert pip pin (27) through lower hole in angle (26). Bolt angles (26) to link assembly (11).

6.7.1.3 Control Assembly Installation -

1. Attach control box (28) with screws to gear box assembly (23) and with one screw to part (25) by installing spacer between control box and part. Attach handle (31) to control box (28) with nut.

2. Attach end of teleflex cable (30) to control box (28) at one end. Attach telescope unit (32) to pin (1) at one end and insert other end in hole in angle (6) and fasten with lock nut. Attach end of teleflex cable (30) to end of telescope unit (32). Insert teleflex cable assy (30) into tie down clamps (29) and fasten clamps in three places on part (25), two places on link assembly (29) and two places on swing arm assembly (5) with screws.

6.7.1.4 Installation on Strongback -

1. Insert swing arm assy (5) between pivot plate (33) and lower plate (34) which are fastened to strongback, and install bolt, nut, washer, and cotter pin.
2. Attach pushrod to lower plate (34) and install bolt, nut, washer, and cotter pin.

6.7.2 Outrigger Assembly

The following engineering drawings are applicable to the manufacture and assembly of the outrigger:

Figure 56	
C76-225	CRADLE DETAILS, ASSY DWG
C76-203	LIGHT STANCHION, ASSY DWG
C76-200	FINAL ASSY DWG SHEET NO. 2

The front plate (39) of the outrigger assembly is bolted to the front plate (42) of the strongback. The strongback fits between the side plates (40) of the outrigger; the light stanchion bottom tube (Figure 57) is inserted through the holes in the side plates (40), and the strongback (41) to tie the two assemblies together.

6.7.3 Air Bearing Sled Assembly

The following engineering drawings are applicable to the assembly of the OCP-DTA to the air bearing sled:

C76-200	FINAL ASSY DWG, SHT 2
C76-225	CRADLE DETAILS, ASSY DWG

The two angles that are located at each end of the outrigger frame are positioned to straddle the channels located on the air bearing sled. The outrigger angles are then bolted to the air bearing sled channels.

6.7.4 Snare Fitting Assembly

The following engineering drawings are applicable to the assembly of the snare fitting to the OCP-DTA:

C76-201	STRONGBACK ASSY DWG
C76-200, SHT 2	GENERAL ARRANGEMENT DWG

The snare fitting is bolted to the frame located at the rear of the strongback structure.

6.7.5 Light Assembly

The following engineering drawings are applicable to the manufacture and assembly of the flood lights:

Figures 56 and 57	
C76-228	LIGHT FIXTURE DETAILS, ASSY DWG

6.7.5.1 Forward Light Assembly Support (Refer to Figure 56) -

1. The light support assembly (37) is inserted through the holes in fittings (35) and (36) which are attached to the strongback until the holes in the support and the fittings line up. Bolts are then inserted through the fittings and support assembly. The light assembly (38) is attached to the support assembly (37) in similar manner as the rear lights. Refer to Paragraph 6.7.5.2 for assembly instructions.

6.7.5.2 Light Fixture Assembly (Refer to Figure 57) - The assembly procedures for all three light fixtures are the same.

1. The hood (6), light socket (4), and spacer (5) are bolted together to the ball fitting (7). The handle (8) is also bolted to the rear of the ball fitting (7). The PIN (9) is inserted into the slot in the ball fitting (7) until the holes in each part are aligned and a dowel pin pressed through the hole.
2. The end of pin (9) is inserted through the hole in socket (10), and spring (11) installed over pin and retained by nut. The nut is tightened so that the friction between the ball fitting (7) and the socket (10) is sufficient to hold the lamp fixture in any attitude selected.
3. The socket (10) is then screwed into the threaded adapter at the end of the light stanchion tube (12). In the case of the front light assembly, the socket is screwed into the end of the light support assembly (37) in Figure 56.
4. The ring (3) is fastened to the hood (6) with screws.
5. The guard (1) is also fastened to the hood (6) with screws.

6.7.6 Light Stanchion Assembly

The following engineering drawings are applicable to the manufacture and assembly of the light stanchions:

Figure 57

C76-203	LIGHT STANCHION ASSY DWG
C76-204	LIGHT STANCHION MACH PARTS DWG
C76-213	TOOL BOX INSTL DWG

6.7.6.1 Vertical Stanchion Assembly (LH assembly and RH assembly similar) -

1. Tube (15) is then inserted through the hole in knob (16) and wedge (17) and installed through the ID of tube assembly (18). The knob (16) is screwed on the end of tube assy (18) pressing the wedge against tube (15) and fixing it in any vertical position selected, by friction.

2. Tube (12) is inserted through the hole in the knob (13) and wedge (14), and installed in the I.D. of tube (15). The knob (13) is screwed on the end of tube (15) pressing the wedge (14) against tube (12) and fixing it in any vertical position selected, by friction.

6.7.6.2 Horizontal Stanchion Assembly (LH and RH assembly similar) -

1. Tube (18) is inserted through hole in knob (19) and wedge (20) and installed in I.D. of frame (21). The knob (19) is screwed on the end of frame (21) pressing the wedge (20) against tube (18) and holding it in any position chosen, by friction.

2. Insert LH and RH tube assy (21) through the I.D. of tool bin sleeves (22) and into I.D. of sleeve (23). Insert bolts through LH and RH tube assy (21) and sleeve (23), fastening them together.

6.7.6.3 Stanchion Installation -

1. Fittings (24) are inserted through the holes in the side plates of the outrigger assembly (Figure 56) and the strongback and into each end of the sleeve (25) located inside the strongback frame. Bolts are then inserted through the holes in sleeve (25) and fittings (24) fastening them together.

2. Each bottom clevis fitting on the assembled frame (21) is then inserted into the fork fitting (24) and bolted together.

6.7.7 Tool Box

The following engineering drawings are applicable to the manufacture and assembly of the tool box:

Figure 57

C76-213	TOOL BOX FRAME INSTL DWG
C76-214	TOOL BOX WELD ASSY DWG

Each tool box (26) is fastened to the tubular frame (22) by six screws in the bottom and back of the tool box.

The tool box assembly is assembled to the light stanchion frame as described in Paragraph 6.7.6.2.

6.7.8 C&D Console Assembly

The following engineering drawings are applicable to the manufacture and assembly of the C&D console:

Figure 57

C76-211	C&D CONSOLE DETAILS & ASSY DWG
C76-212	PANEL ASSY & DETAILS DWG
C76-224	HAND HOLDS DETAIL DWG
C76-219	HARNESS INSTL DWG

6.7.8.1 Panel Installation - The panel (32) is installed to the console (33) by screws located along the edge of the panel. The panel wiring connectors are connected to the mating connectors located in the bottom of the console.

6.7.8.2 Hand Controller Assembly (both hand controller installations similar) -

1. Hand controller (56) is connected to top of pivot fitting (57) by screws. Connect electrical connector at end of wire harness to mating connector located on hand controller box.

2. Insert upper leg of hand hold (58) through hole in pivot fitting (57) and insert washer over upper leg of hand hold (58). The two legs of the hand holds are then installed through the holes in the side of console (33) and a nut attached to the thread on the end of the upper hand hold leg and the lower leg fastened to the console by screw.

3. Insert bolt through slot in pivot (57) through hole in console and screw bolt into threaded plate (59) which is fastened to the inside wall of the console. Bolt is loosened when hand controller attitude is adjusted and retightened to hold hand controller in position chosen.

6.7.8.3 Console Support Tube Assembly -

1. Console support tube (31) is inserted in block in base of console (33) and bolted to the block.

2. Pin (30) is inserted through I. D. of spring (29) and through hole in housing (28). Knob is attached to end of pin (30) with rivet. The assembly is attached to the support tube (31) with 4 screws with the end of the pin (30) fitting in the hole in the support tube. The screws are installed with Locktite and the end of the screws ground flush with the inside of the tube.

3. The console assy is then lowered over the top of the pedestal (34) with the knob (27) pulled out. The knob is released and the console assy moved until the pin (30) automatically engages one of the holes in the top of the pedestal tube (34).

6.7.9 C&D Console Pedestal Assembly

The following engineering drawings are applicable to the manufacture and assembly of the C&D console pedestal assembly:

Figure 57

C76-209	CONSOLE LATCH MECH INSTL DWG
C76-210	CONSOLE LATCH MECH PARTS DWG
C76-202	CONSOLE STRUCT & MECH DWG
C76-207	CONSOLE SUPPORT STRUCT ASSY DWG
C76-208	CONSOLE SUPPORT MACH PARTS DWG

6.7.9.1 Lower Support Tube Assembly -

1. Install pin (39) through center of spring (40) and into I. D. of housing (41) and screw housing to support assy (38) with end of pin inserted through hole in support housing wall. Screws are to be installed with locktite.

2. Install crank (44) inside tube (37) and insert bolt through hole in tube and hub of crank and install nut and washer. Fasten guide (43) to the inside wall of tube (37) with screws. Slide rod (45) clevis end over end of crank (44) and install screw, nut, and washer.

3. Attach rod (42) clevis end to end of pin (39) with screw, nut, and washer. Install nut, screw, and washer to the other end of rod (42). Slide tube (37) over rod (42) into the base of support housing (38) and position rod (42) so that it lies in the middle of the slot in guide (43). Adjust crank (44) so that the slot in the crank arm fits over the screw in the end of the rod (42). Insert bolts through holes in support housing (38) and tube (37). Install nuts and washers.

6.7.9.2 Vertical Tube Assembly -

1. Slide channel (46) over link (48) and lock (47). Install screws, washers, and nuts through the two holes in channel (46) and the holes in the link and lock. Flush head of screws lie on tube side of channel.

2. Slide clevis end of rod (50) over end of pivot bar (55). Insert screw through hole and install nut and washer. Slide pivot bar down the inside of tube (35) until through hole in pivot bar lines up with holes through tube. Insert shaft of link (48) through hole in tube (35) and into hole in pivot bar (55), from each side of tube. Insert bolt through hole in (48) and through the assembly and install nut and washer on opposite end of tube.

3. Line up each hole lock (47) with hole in tube (35). Insert bolt through hole in lock through tube and through lock on other side of tube. Install washer between each lock and tube before inserting bolt. Install nut on bolt and tighten nut so that lock rotates freely.

4. Install guide (51) on the inside of tube (35) with screws. Screw heads must be flush with outside surface of tube (35).

6.7.9.3 Pedestal Assembly -

1. Slide end of rod (49) in clevis end of crank (45) and install screw, washer, and nut. Insert tube (37) into bore of fold fitting assy (36)

passing rod (49) through slot in bottom of fitting assy (36). Install bolts through fitting and tube and attach washer and nuts.

2. Insert tube assy (35) into fitting assembly (36) making sure rod (49) is on the inside of tube assy (35). Align holes in fitting assy (36) with hole in bottom of tube (35) and insert bolt through whole assembly and install nut and washer on bolt end.

3. Insert handle assy (54) through slot in tube (35) making sure end of handle assy passes through middle or rod (50) and engages pin on rod (49). Insert screw through holes in bracket on tube (35) and hole in handle assy (54). Install washer and nut with locktite. Rods (49) and (50) shall lie in slot in guide (51) and springs (52) and (53) attached from rod ends to bracket on inside of tube (35).

4. Sleeve (34) is installed over the top end of tube (35) and bolted together.

6.7.10 Foot Restraint Platform Assembly

The following engineering drawings are applicable to the manufacture and assembly of the foot restraint platform:

Figure 57	
C76-206	FOOT RESTRAINT MACH PARTS DWG
C76-205	FOOT RESTRAINT INSTL DWG

6.7.10.1 Platform Assembly -

1. Toe Restraint (62) is attached to spacer (63) which is in turn fastened to plate (64). Heel (61) and guide (60) are also fastened to the plate (64).

2. The track assy (65) which includes the lock release pin and lanyard is riveted to the bottom of plate (64).

3. Bearing (66) is inserted in bore in roller support plate (67).

Rollers (68) are assembled to the roller support plate (67).

6.7.10.2 Platform Installation -

1. Shaft assy (68) is inserted in base of bearings (69) which are pressed in housing (38) of pedestal assembly. Holes in shaft wall face down so

that slot in bottom of shaft engages tabs on base plate (71) on strongback, and lock pin in (38) engages holes in shaft wall (68).

2. Roller support assembly (67) is then inserted in I. D. of shaft (68) and through bolts installed through holes in roller support assembly and base plate (71).

3. Platform assy (64) is then placed over roller support assembly (67) and bearing base in (67) aligned with base in (64). The lock pin in (65) should engage holes in (67). A through bolt is then inserted through the hole in (64), the bearing in (67) and the bearing (70) installed in the base plate (71). Nut and washer are then installed on bolt.

4. The end of the lanyard (72) is then attached to clip (73) which is screwed on to the tube (35).

6.7.11 Strongback Assembly

The following engineering drawings are applicable to the manufacture and assembly of the strongback assembly:

C76-201	STRONGBACK MACH PARTS DWG
C76-221	STRONGBACK MACH PARTS DWG
Figure 57	
C76-215	CONSOLE STOP ASSY DWG

The strongback assembly is a riveted structure which also has the following parts assembled to it by screws and bolts:

1. The stop block (72) is bolted to the top of the strongback base plate (71). A bolt is inserted through the slot in lock clamp (73) and a pip pin inserted in either of the two holes in the clamp, hold the clamp in position.

2. Three angles (74) are bolted to the base plate (71). Switches (75) are installed ;through the hole in the leg of the angles and are fastened by nuts on the threaded end of the switch. The shaft of the switches are actuated by the end of pin (39) installed in fitting (38).

3. Access to the inside of the strongback structure is through access holes in the side of the strongback structure. Cover plates (76) are bolted to the strongback to cover the holes.

4. The payload handling device stowed position latch is shown assembled on C76-221.

6.7.12 Wire Harness

The wire harness installation on the DTA is shown on drawing C76-219. The connectors which interface with the MDF wire harness are located on an angle attached to the rear outrigger of the DTA. The wires for the rear lights are routed through the center of the light stanchion tubes and are pre-coiled wires similar to the type used for telephones. The wire harnesses are routed along the strong back and are fastened to the structure with clamps. The harness is looped around the pedestal rotary joints and clamped to the vertical console pedestal tube. Connectors are provided at the bottom of the C&D console so that it can be removed without disturbing the complete harness.

APPENDIX A

OCP-DTA MANUFACTURING REQUIREMENTS/SCHEDULE

NAS9-15507
DRL T-1422
LINE ITEM 3
DRD MA697T

PAGE 1 OF

CONTRACT REQUIREMENTS	CONTRACT ITEM	MODEL.	CONTRACT NO.
		MRWS	NAS 9-15507

REPORT

NO. NSS-MR-RP021

DATE: March 5, 1979

OCP-DTA
MANUFACTURING REQUIREMENTS/SCHEDULE

CODE 26512

PREPARED BY: O. Vescio

TECHNICAL APPROVAL: A. Nathan

CHECKED BY:

APPROVED BY:

DEPARTMENT:

APPROVED BY:

SECTION:

APPROVED BY:

REVISIONS

DATE	REV. BY	REVISIONS & ADDED PAGES	REMARKS

GAC 324A REV. 3
10-70

GRUMMAN AEROSPACE CORPORATION

CONTENTS

ILLUSTRATIONS

Section 1

INTRODUCTION

This document includes the manufacturing requirements to fabricate and assemble the Open Cherry Picker Development Test Article (OCP-DTA) and the schedule for its manufacture and checkout. The design of the OCP-DTA is identified by Grumman drawing C76-200, OCP-DTA General Arrangement (Figure 1), and the OCP-DTA Specification (Appendix A, Volume II of final report).

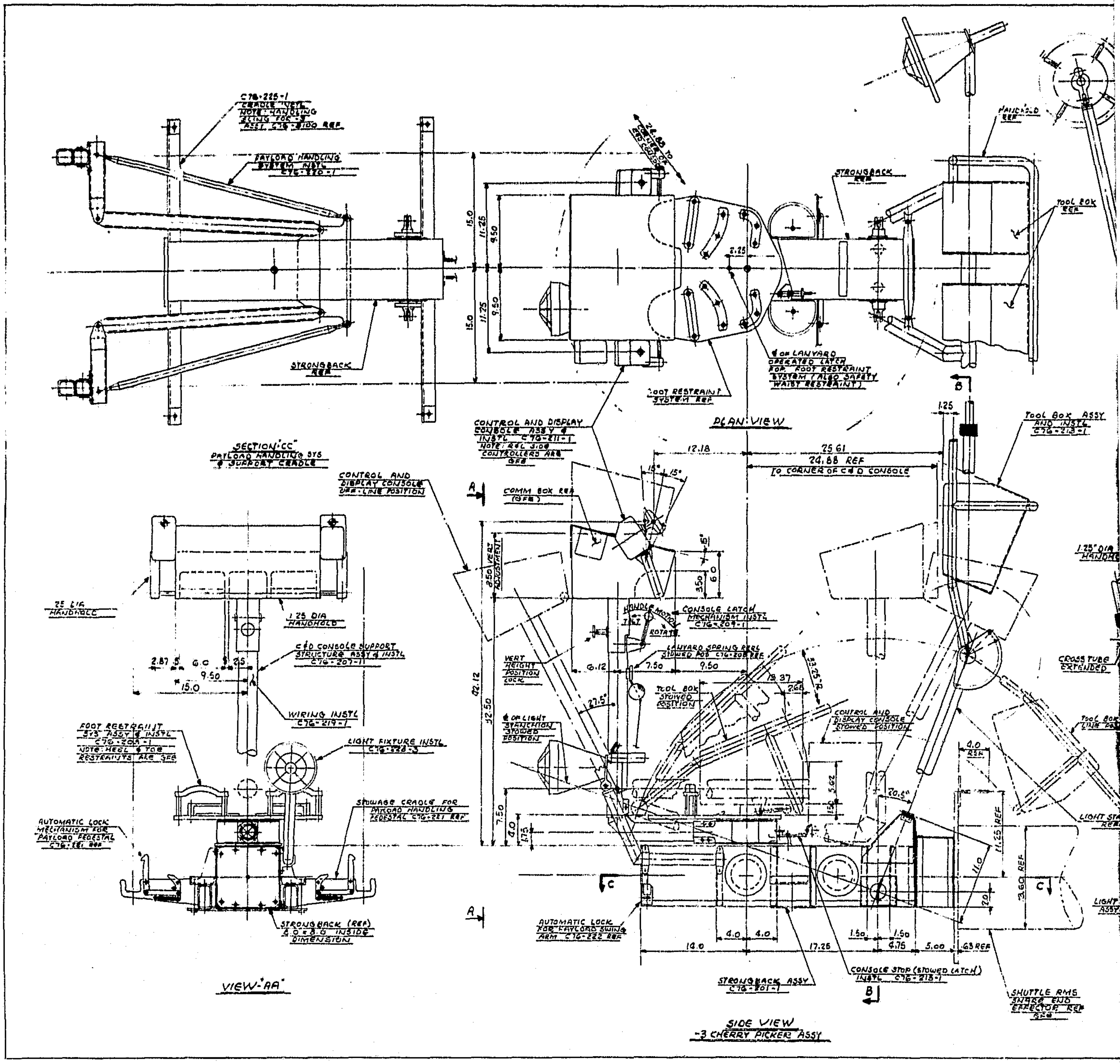
C76-225-1
CRADLE INSTL
NOTE: HANDLING SLING FOR -3 ASSY C76-2100 REF
PAYLOAD HANDLING SYSTEM INSTL C76-220-1
STRONGBACK REF
15.0
11.25
9.50
9.50
11.25
15.0
SECTION "CC"
PAYLOAD HANDLING SYS & SUPPORT CRADLE
26.83 TO CORNER OF C&D CONSOLE
2.25
STRONGBACK REF
HANDHOLD REF
TOOL BOX REF
℄ OF LANYARD OPERATED LATCH FOR FOOT RESTRAINT SYSTEM (ALSO SAFETY WAIST RESTRAINT)
FOOT RESTRAINT SYSTEM REF
PLAN VIEW
B
1.25
TOOL BOX ASSY AND INSTL C76-213-1
CONTROL AND DISPLAY CONSOLE ASSY & INSTL C76-211-1
NOTE: R&L 3.0B CONTROLLERS ARE GFE
CONTROL AND DISPLAY CONSOLE OFF-LINE POSITION
12.18
25.61
24.88 REF
TO CORNER OF C&D CONSOLE
15°
15°
A
COMM BOX REF (GFE)
5°
6.0
3.50
2.50 VERT ADJUSTMENT
HANDLE MOTION
TILT
ROTATE
CONSOLE LATCH MECHANISM INSTL C76-209-1
LANYARD SPRING REEL STOWED POS C76-208 REF
VERT HEIGHT POSITION LOCK
6.12
7.50
9.50
42.12
32.50
27.5°
TOOL BOX STOWED POSITION
19.37
2.68
33.25 R
℄ OF LIGHT STANCHION STOWED POSITION
CONTROL AND DISPLAY CONSOLE STOWED POSITION
1.25" DIA HANDHOLD
CROSS TUBE EXTENDED
5.62
1.50
7.50
4.0
1.75
4.0 REF
20.5°
11.25 REF
11.0
3.60 REF
2.0
C
C
A
AUTOMATIC LOCK FOR PAYLOAD SWING ARM C76-222 REF
4.0
4.0
14.0
17.25
1.50
1.50
4.75
5.00
.63 REF
STRONGBACK ASSY C76-201-1
CONSOLE STOP (STOWED LATCH) INSTL C76-215-1
B
SHUTTLE RMS SNARE END EFFECTOR REF GFE
SIDE VIEW
-3 CHERRY PICKER ASSY
.25 DIA HANDHOLD
1.25 DIA HANDHOLD
C&D CONSOLE SUPPORT STRUCTURE ASSY & INSTL C76-207-1
2.87
.5
6.0
.5
.25
9.50
15.0
WIRING INSTL C76-219-1
FOOT RESTRAINT SYS ASSY & INSTL C76-209-1
NOTE: HEEL & TOE RESTRAINTS ARE GFE
LIGHT FIXTURE INSTL C76-228-3
STOWAGE CRADLE FOR PAYLOAD HANDLING PEDESTAL C76-221 REF
AUTOMATIC LOCK MECHANISM FOR PAYLOAD PEDESTAL C76-221 REF
STRONGBACK (REF) 4.0 x 8.0 INSIDE DIMENSION
VIEW "AA"

0081-085
III

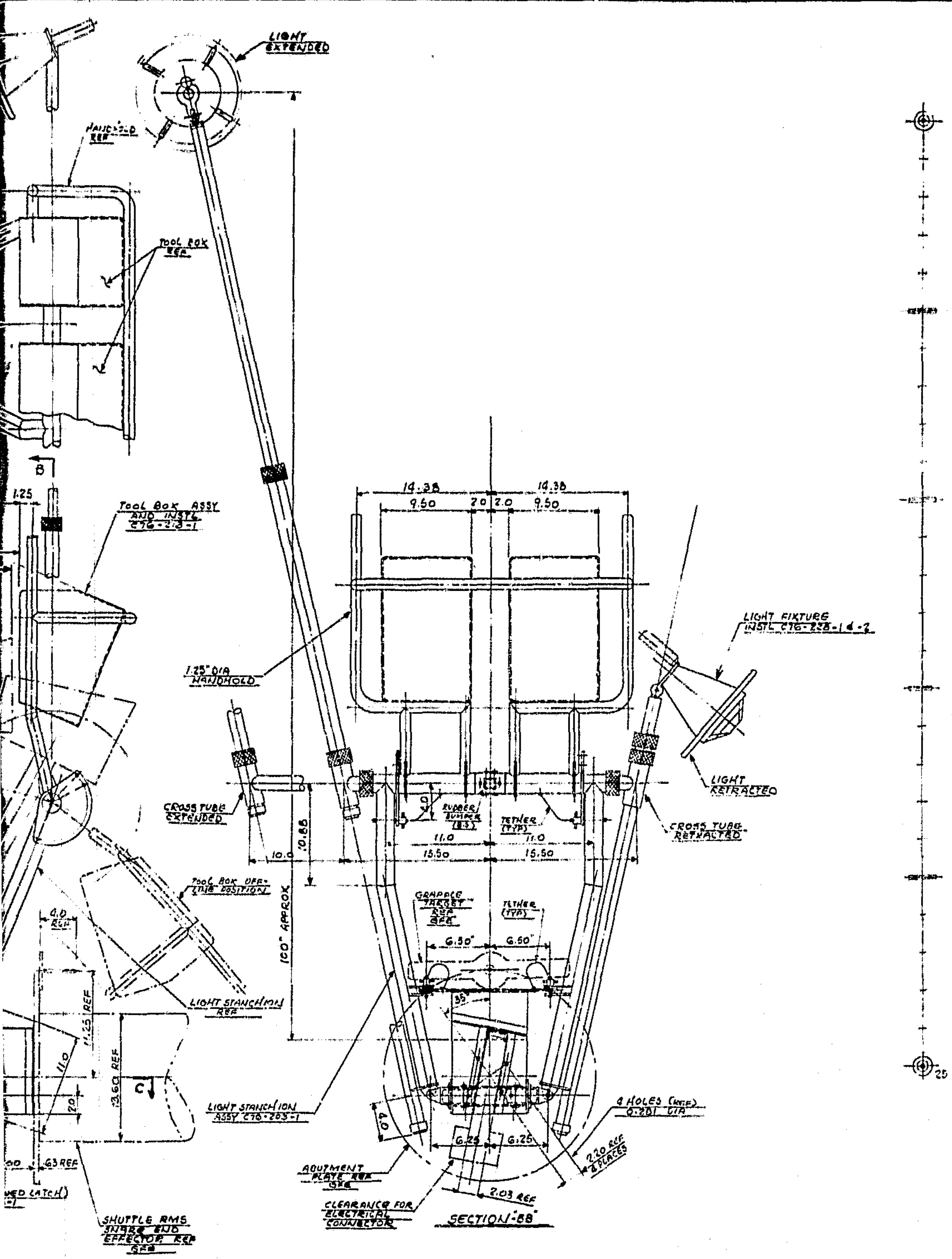

NOTES

1. LUBRICATE ALL ROTATING AND SLIDING JOINTS PER MAINTENANCE AND SERVICE PROCEDURES REPORT VI NSS-MR-RP-00A VOLUME 3 SECTION 6.3

-3	-1	PART NO	NOMENCLATURE	MATL SPEC	STOCK SIZE	PROCESS	FINISH
	16	MS21042L4	NUT				
	16	AN960D416L	WASHER				
	16	AN4-7	BOLT				
	4	C76-225-24	ANGLE				
	4	C76-225-23	ANGLE				
1		C76-228-5	FWD LIGHT INSTL				
1		C76-228-2	R.H. LIGHT INSTL				
1		C76-228-1	L.H. LIGHT INSTL				
1		C76-225-1	CRADLE INSTL				
1		C76-220-1	PAYLOAD HANDLING SYSTEM INSTL				
1		C76-219-1	WIRING INSTL				
1		C76-215-1	CONSOLE STOP INSTL				
1		C76-213-1	TOOL BOX INSTL				
1		C76-211-1	C&D CONSOLE ASSY				
1		C76-209-1	CONSOLE LATCH MECH INSTL				
1		C76-207-1	CONSOLE SUPPORT STRUCTURE ASSY				
1		C76-205-1	FOOT RESTRAINT SYSTEM INSTL				
1		C76-203-1	LIGHT STANCHION ASSY				
1		C76-201-1	STRONGBACK ASSY				
	1	-3	CHERRY PICKER ASSY				
		-1	CHERRY PICKER INSTL	(AT MDF VAC)	(SEE SHT 2)		

QTY NHA	PART NO	NEXT ASSY
1	-1	

USAGE DATA

STRESS

DRAWN BY ART FRANK 3/15

GRUMMAN AEROSPACE CORPORATION
BETHPAGE, NEW YORK 11714

MRWS OPEN CHERRY PICKER
DEVELOPMENT TEST ARTICLE
FINAL ASSY & GENERAL ARRGT

SIZE R | CODE IDENT NO 26512 | C76-200

SCALE 1/6

Figure 1. OCP-DTA General Arrangement

FOLDOUT FRAME 2

REPRODUCIBILITY OF THE ORIGINAL PAGE IS POOR

Section 2

ENGINEERING DESIGN DRAWINGS

Engineering drawings were prepared for the fabrication and assembly of structural, mechanical, and electrical hardware of the OCP-DTA. The drawings also documented the requirements to interface the OCP-DTA with the JSC-MDF (Figure 2).

The drawing system used utilized the engineering design layouts to adequately define detail parts, assemblies, and installations on one drawing, with parts detailed in place or in separate details as shown in Figure 3. Major machine parts were detailed on separate drawings. Cable assemblies were combined with "stick lines" for the wiring drawings. The OCP-DTA drawing tree is shown in Figure 4.

Detailed parts and assemblies were identified on the drawings with part numbers and the material type, processes and finishes required listed on the drawing in the Bill of Materials (Figure 5). Critical tolerances were specified on the drawing where required for mating parts and assemblies. All drawings were reviewed and approved by Stress and Project Management. The release of prepared drawings was established and monitored by the Project. Engineering drawings have been delivered to NASA under letter NSS-MR-LR012.

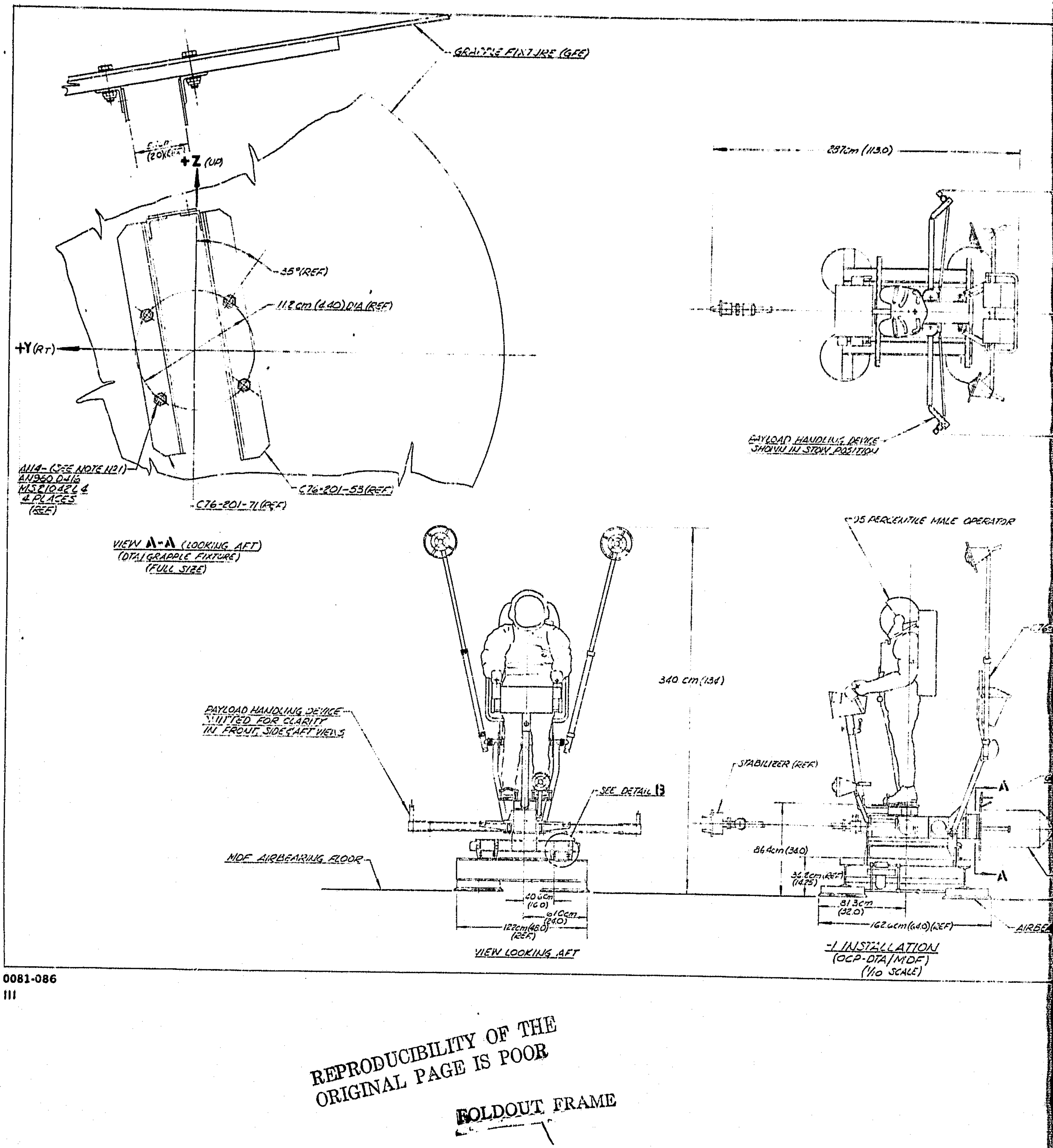

0081-086
111

REPRODUCIBILITY OF THE
ORIGINAL PAGE IS POOR

FOLDOUT FRAME

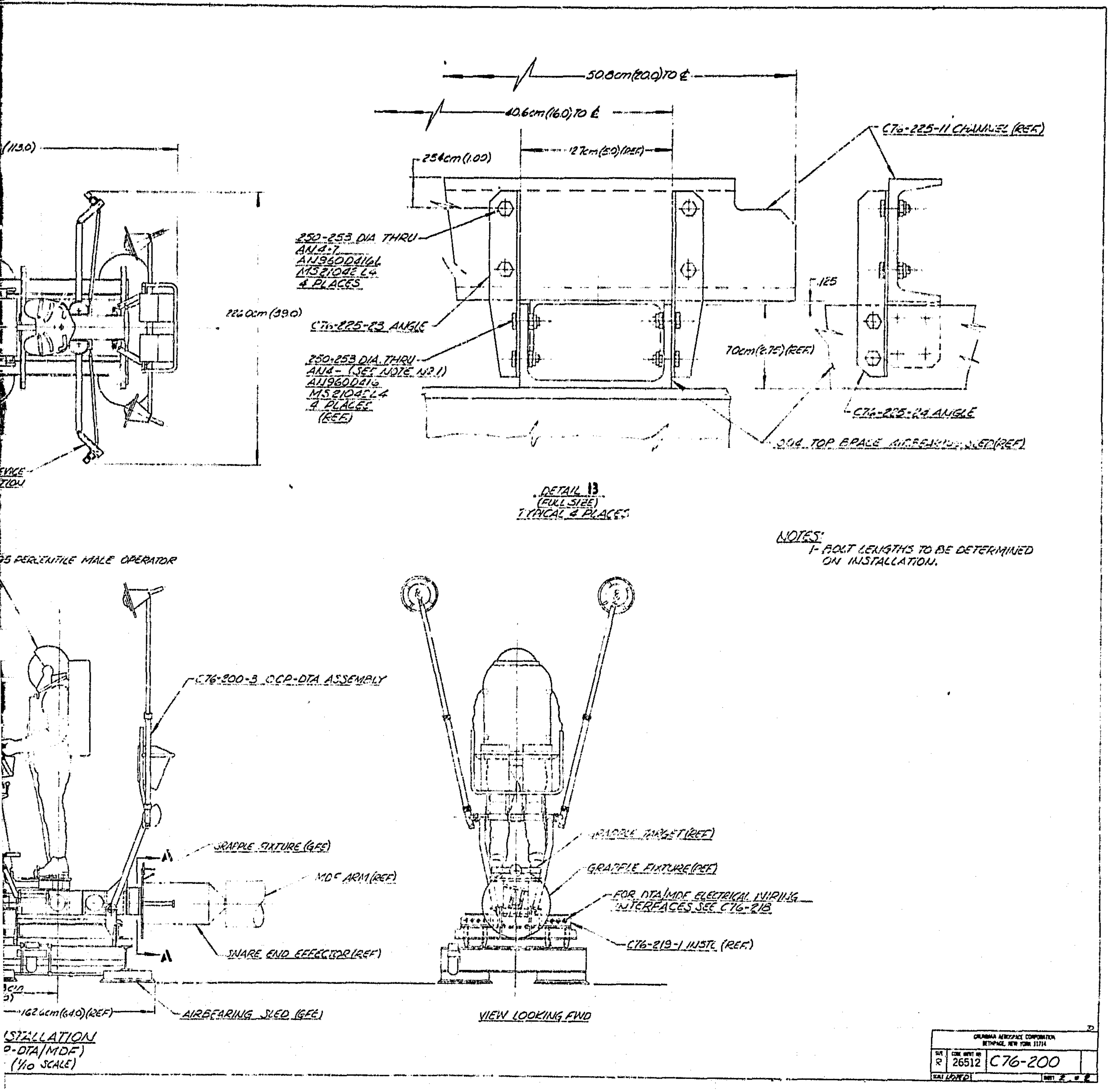

Figure 2. Interface Requirements for the OCP-DTA with the JSC-MDF

C76-215

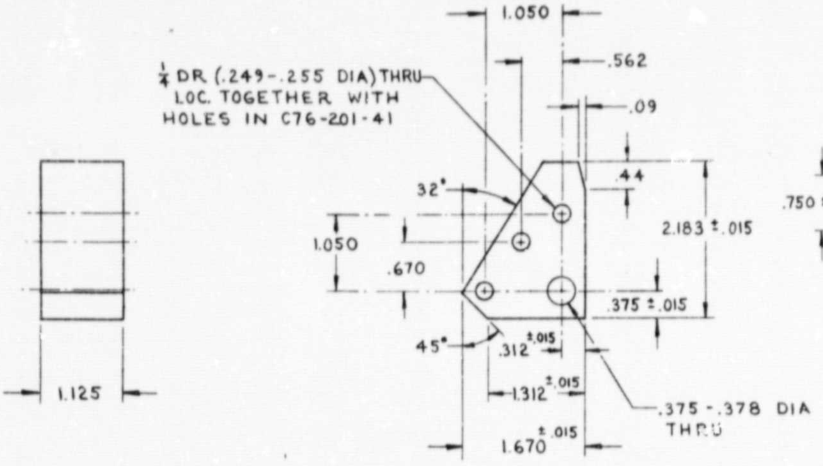

-11 BOCK DETAIL

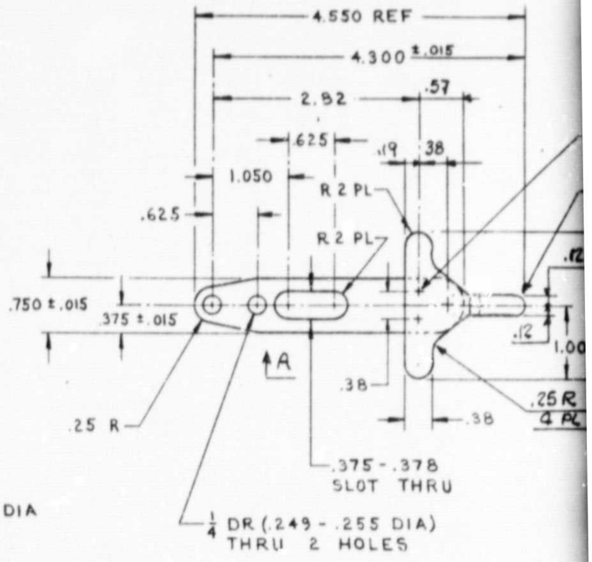

-3 BAR ASSY

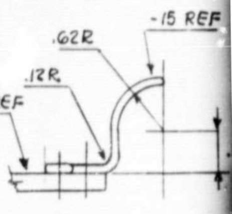

VIEW "AA"

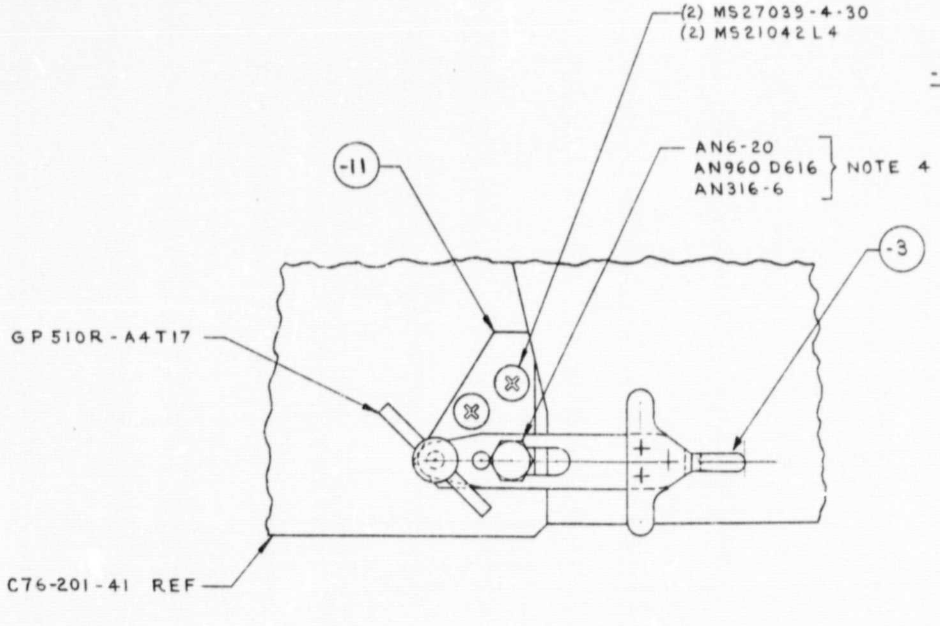

-1 INSTL

1	-1	C7
QTY/NHA	PART NO.	NE
USAGE	DA	

0081-087
III

REPRODUCIBILITY OF THE ORIGINAL PAGE IS POOR

FOLDOUT FRAME

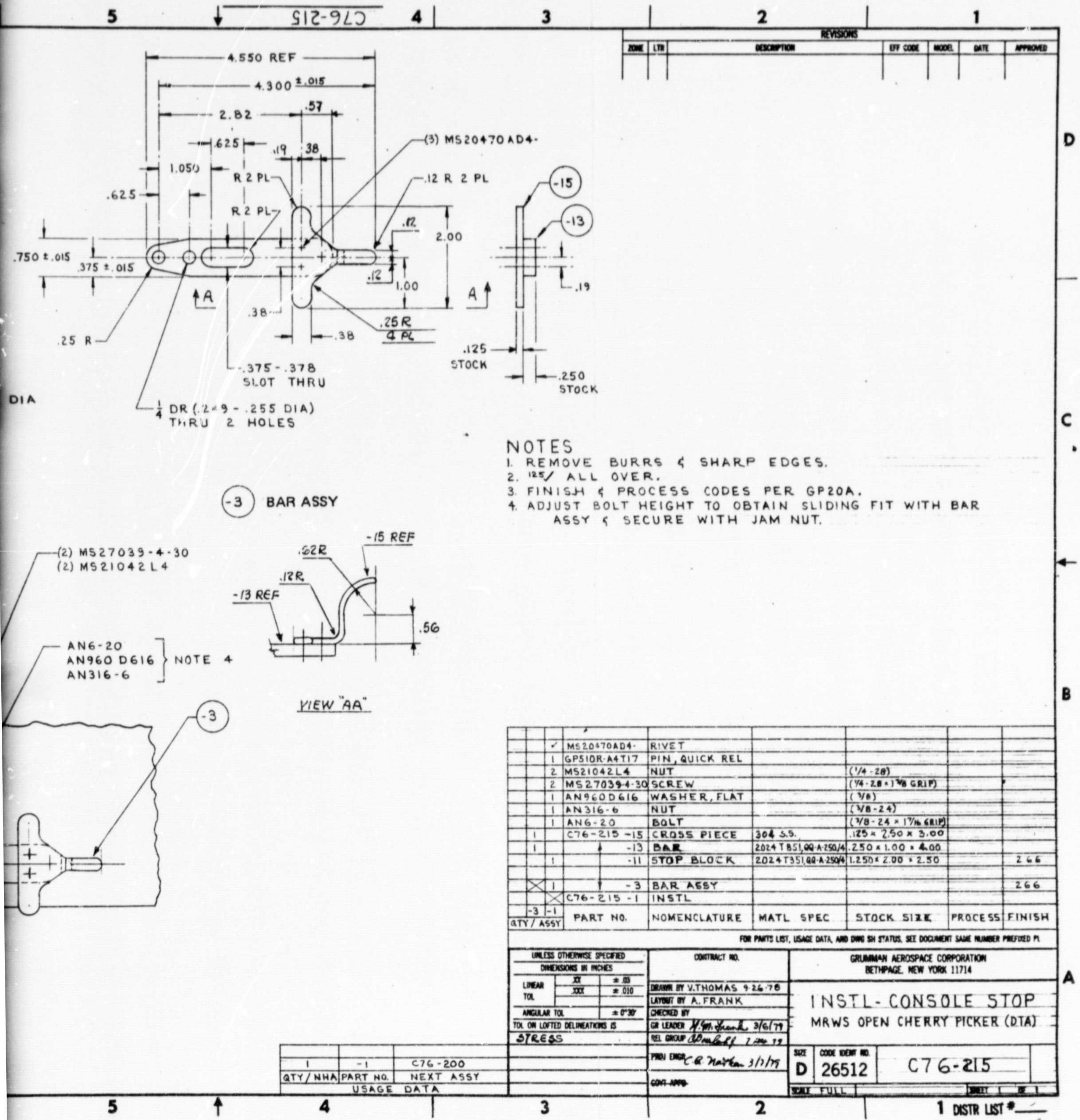

NOTES
1. REMOVE BURRS & SHARP EDGES.
2. 125/ ALL OVER.
3. FINISH & PROCESS CODES PER GP20A.
4. ADJUST BOLT HEIGHT TO OBTAIN SLIDING FIT WITH BAR ASSY & SECURE WITH JAM NUT.

QTY / ASSY -3	QTY / ASSY -1	PART NO.	NOMENCLATURE	MATL SPEC	STOCK SIZE	PROCESS	FINISH
	✓	MS20470AD4-	RIVET				
	1	GP510R-A4T17	PIN, QUICK REL				
	2	MS21042L4	NUT		(1/4-28)		
	2	MS27039-4-30	SCREW		(1/4-28 × 1 3/8 GRIP)		
	1	AN960D616	WASHER, FLAT		(3/8)		
	1	AN316-6	NUT		(3/8-24)		
	1	AN6-20	BOLT		(3/8-24 × 1 7/16 GRIP)		
1		C76-215 -15	CROSS PIECE	304 S.S.	.125 × 2.50 × 3.00		
1		-13	BAR	2024T851,QQ-A-250/4	.250 × 1.00 × 4.00		
	1	-11	STOP BLOCK	2024T351,QQ-A-250/4	1.250 × 2.00 × 2.50		266
☒	1	-3	BAR ASSY				266
	☒	C76-215 -1	INSTL				

FOR PARTS LIST, USAGE DATA, AND DWG SH STATUS, SEE DOCUMENT SAME NUMBER PREFIXED PL

QTY/NHA	PART NO.	NEXT ASSY
1	-1	C76-200

USAGE DATA

UNLESS OTHERWISE SPECIFIED
DIMENSIONS IN INCHES
LINEAR TOL .XX ±.03
.XXX ±.010
ANGULAR TOL ±0°30'
TOL ON LOFTED DELINEATIONS IS
STRESS

CONTRACT NO.
DRAWN BY V.THOMAS 9-26-78
LAYOUT BY A.FRANK
CHECKED BY
GR LEADER H.M. Frank 3/6/79
REL GROUP 7 Mar 79
PROJ ENGR C.R. Nathan 3/7/79
GOVT APPD

GRUMMAN AEROSPACE CORPORATION
BETHPAGE, NEW YORK 11714

INSTL-CONSOLE STOP
MRWS OPEN CHERRY PICKER (DTA)

SIZE D
CODE IDENT NO. 26512
C76-215
SCALE FULL
SHEET 1 OF 1

DISTR LIST #

Figure 3. Console Stop Installation

FOLDOUT FRAME 2

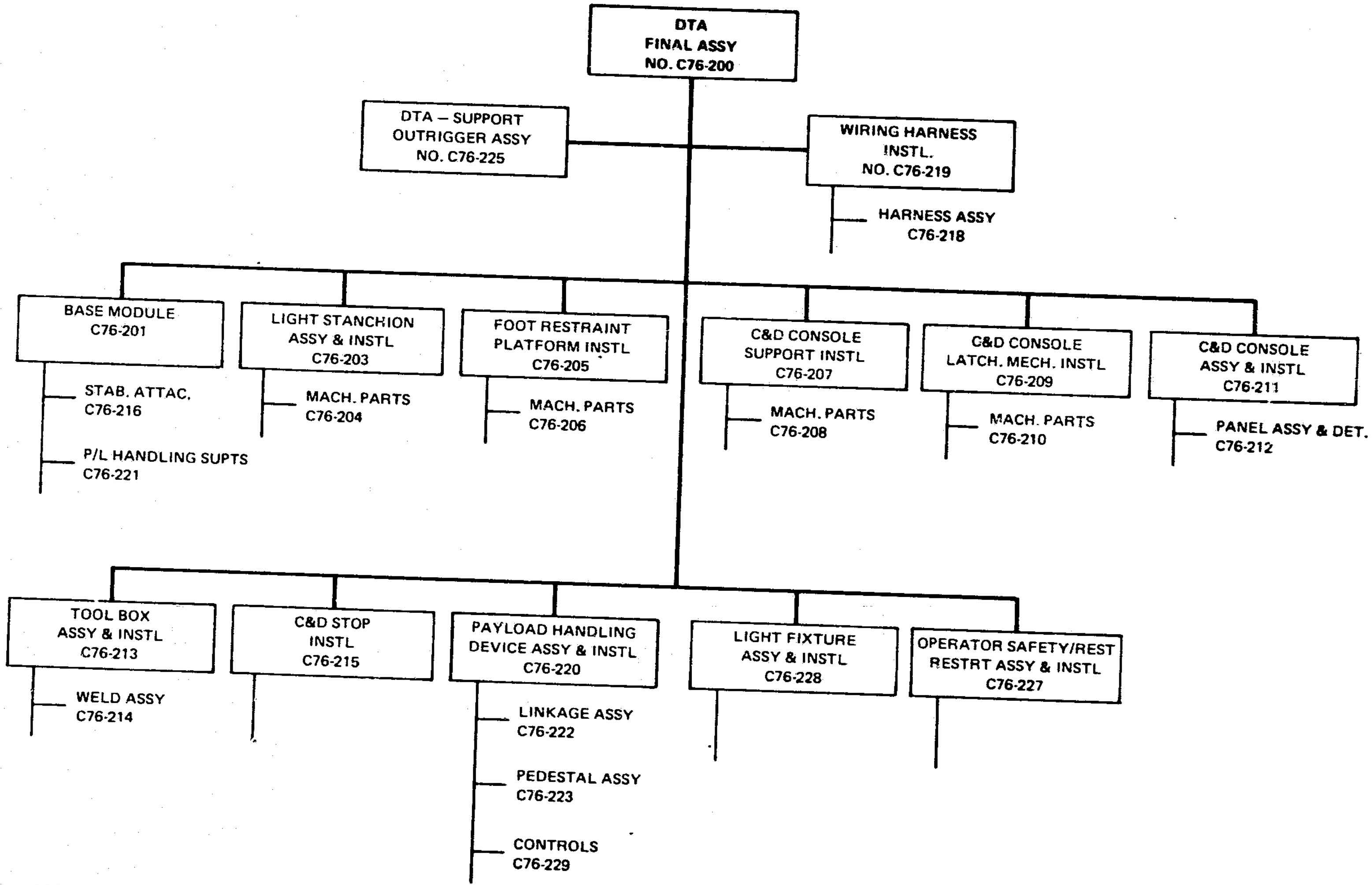

0081-088
III

Figure 4. OCP-DTA Drawing Tree

		✓	MS20470AD4-	RIVET				
		1	GP510R-A4T17	PIN, QUICK REL				
		2	MS21042L4	NUT		(1/4 -28)		
		2	MS27039-4-30	SCREW		(1/4 - 28 × 1 3/8 GRIP)		
		1	AN960D616	WASHER, FLAT		(3/8)		
		1	AN316-6	NUT		(3/8 - 24)		
		1	AN6-20	BOLT		(3/8 - 24 × 1 7/16 GRIP)		
	1		C76-215 -15	CROSS PIECE	304 S.S.	.125 × 2.50 × 3.00		
	1		↑ -13	BAR	2024 T851, QQ-A-250/4	.250 × 1.00 × 4.00		
		1	-11	STOP BLOCK	2024T351, QQ-A-250/4	1.250 × 2.00 × 2.50		266
	╳	1	↓ -3	BAR ASSY				266
		╳	C76-215 -1	INSTL				
	-3	-1	PART NO.	NOMENCLATURE	MATL SPEC	STOCK SIZE	PROCESS	FINISH
QTY/ASSY								

0081-089
III

Figure 5. Bill of Materials

Section 3

MANUFACTURING REQUIREMENTS

The detail parts of the OCP-DTA consist of standard shapes or simple brake formed and/or machine parts to minimize costs. The subassemblies are builtup using bolts, rivets, and a limited amount of welding. Final assembly is accomplished using rivets and hand driven fasteners. A "jury rig" approach to tooling is employed throughout the fabrication and assembly of the OCP-DTA whenever necessary to insure alignment of parts or assemblies, so no special tooling or assembly fixtures are required.

Materials used on the OCP-DTA consisted of readily available aluminum and stainless steel alloys usually selected for their availability rather than their specific properties except if a part had to be welded, a suitable weldable alloy was chosen. No special manufacturing processes are required for the OCP-DTA.

In the design of the OCP-DTA the use of close tolerances were limited to minimize costs. Where close tolerances are specified on the detail drawing, quality control inspection will verify dimensional accuracy of the part. The quality control approach proposed for this program will consist of receiving inspection on all purchased components, inspection of parts, subassemblies, and assemblies during the manufacturing phase and a final checkout of the operation of OCP-DTA before delivery to JSC.

The interface identification between the OCP-DTA and the MDF facility are identified in the OCP-DTA Specification (Appendix A, Volume II of the final report) and General Arrangement Drawing C76-200, Sheet II (Figure 2). At completion of the OCP-DTA an electrical function checkout will be performed and at that time electrical interfaces will be verified to ensure compliance with documented interfaces.

If the OCP-DTA is built by Grumman we propose to utilize the facility and equipment located in our Product Development Operations Center in Plant 5. This center with its own engineering, manufacturing and test capabilities was established for the efficient and low cost fabrication of one-of-a-kind articles like the OCP-DTA. Where necessary the facilities and equipment in other plants are available such as tube swaging etc. The fabrication of the OCP-DTA does not require any special facilities or equipment.

The assembly sequence of the OCP-DTA major elements are shown in Figure 6. Step-by-step assembly procedures are contained in Subsection 6.7 of this final report.

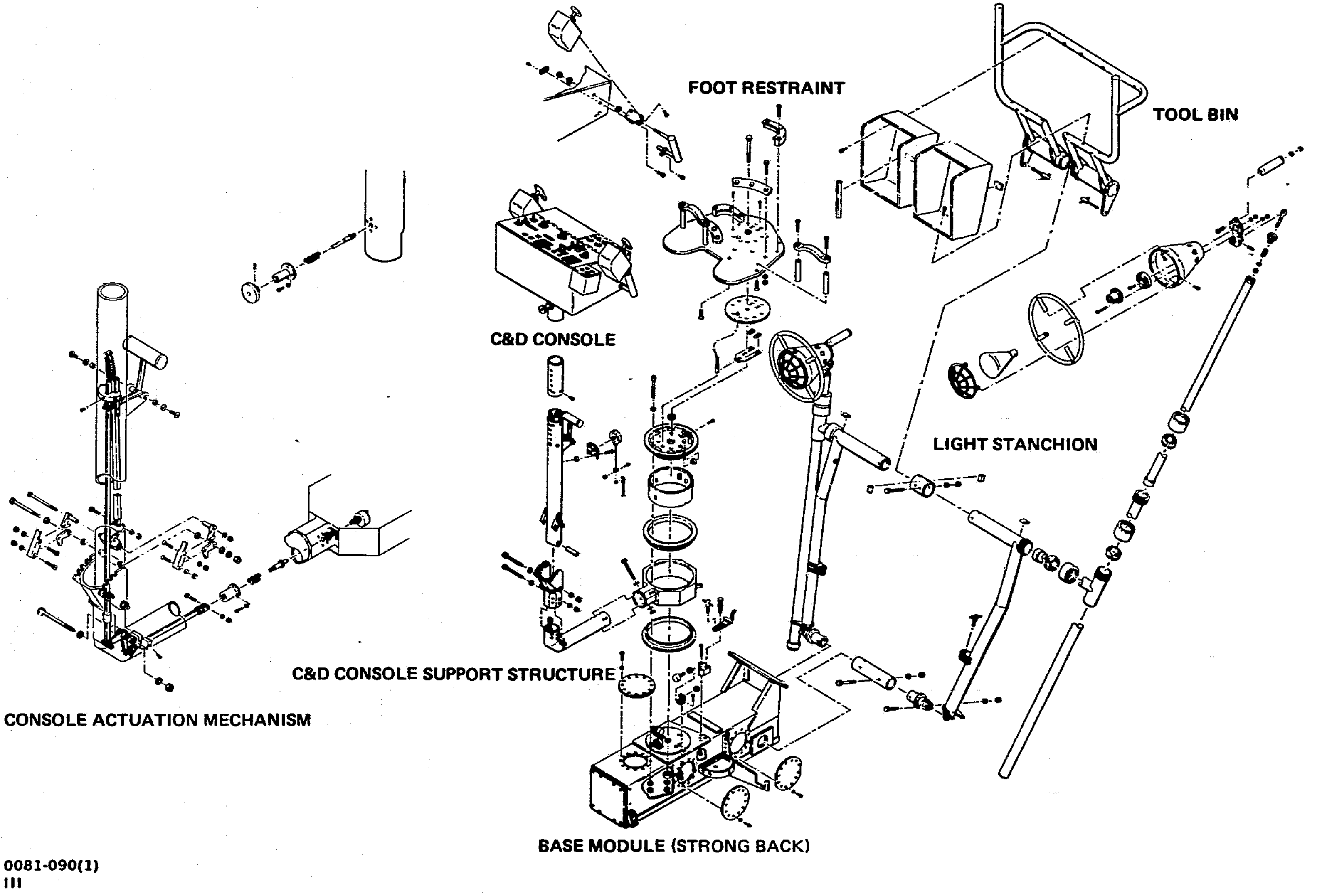

Figure 6. OCP-DTA Major Element Assembly Sequence (Sheet 1 of 2)

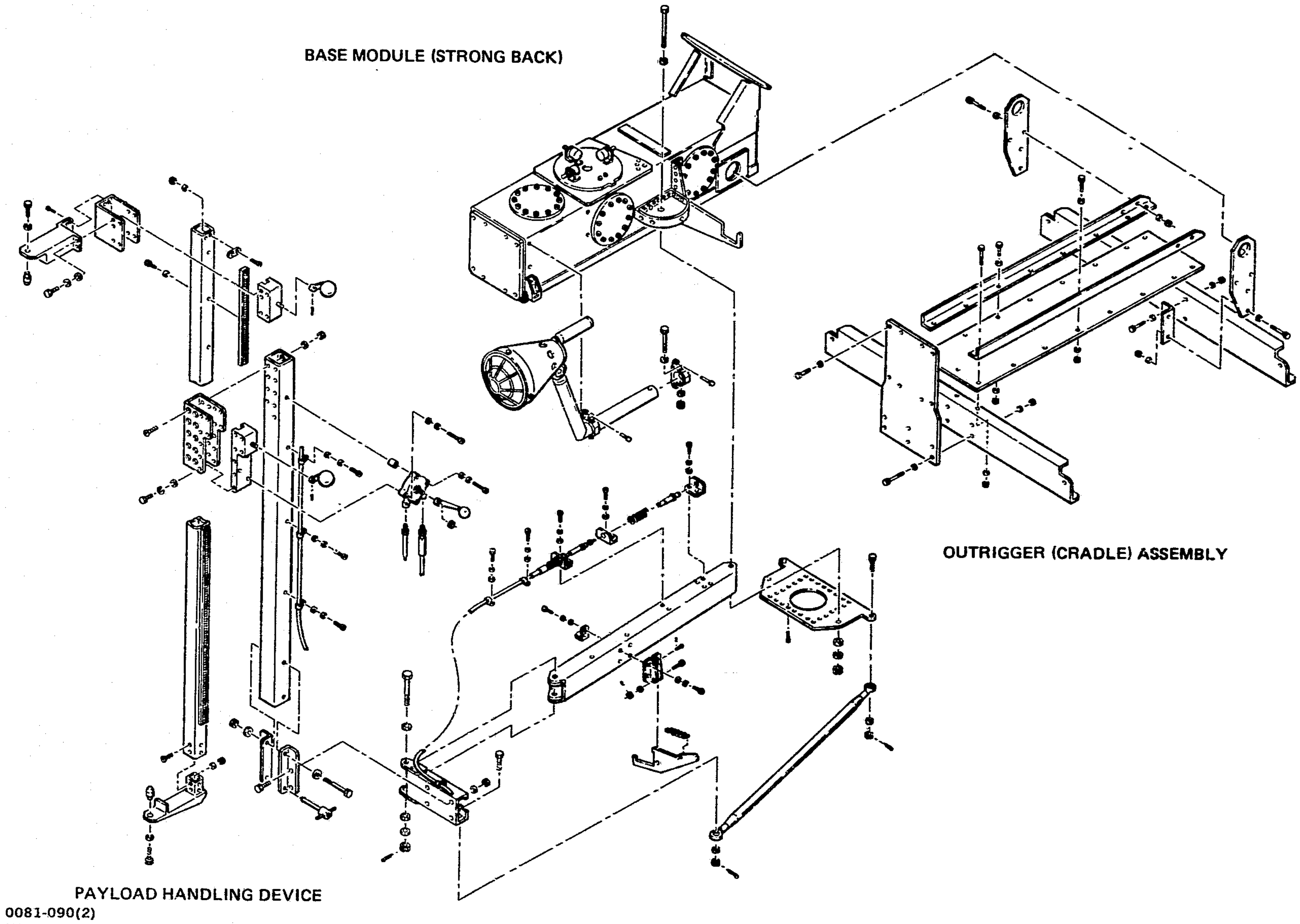

Figure 6. OCP-DTA Major Element Assembly Sequence (Sheet 2 of 2)

Section 4

SCHEDULE

To meet the desired delivery schedule each major manufacturing and test task was sequenced/time phased and decision milestones identified. The schedule shown in Figure 7 depicts the major subelements of the OCP-DTA and the various manufacturing tasks that must be performed in the buildup of these subelements and the final integration into a completely assembled unit. Procurement of items necessary to fabricate the OCP-DTA are shown as milestones because they are long-term lead items and it is estimated purchase orders must be released 3 to 4 months before completion to meet end item delivery date. NASA furnished equipment, MMU hand controllers and computer box which must be installed on the OCP-DTA before delivery are also indicated as milestones. It is estimated that it requires 21 weeks from initial purchase order release to final checkout to fabricate the OCP-DTA.

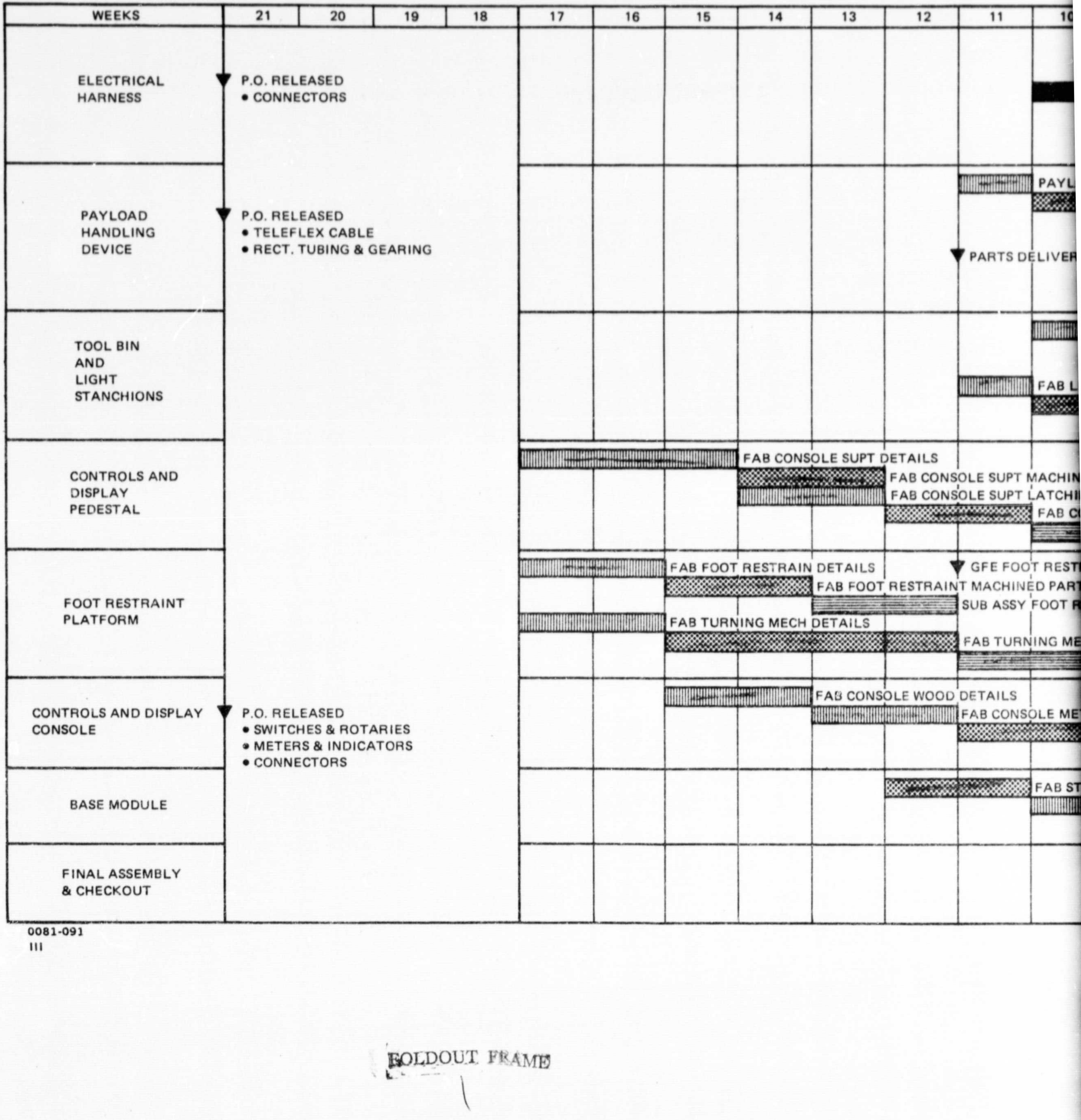

0081-091
III

FOLDOUT FRAME

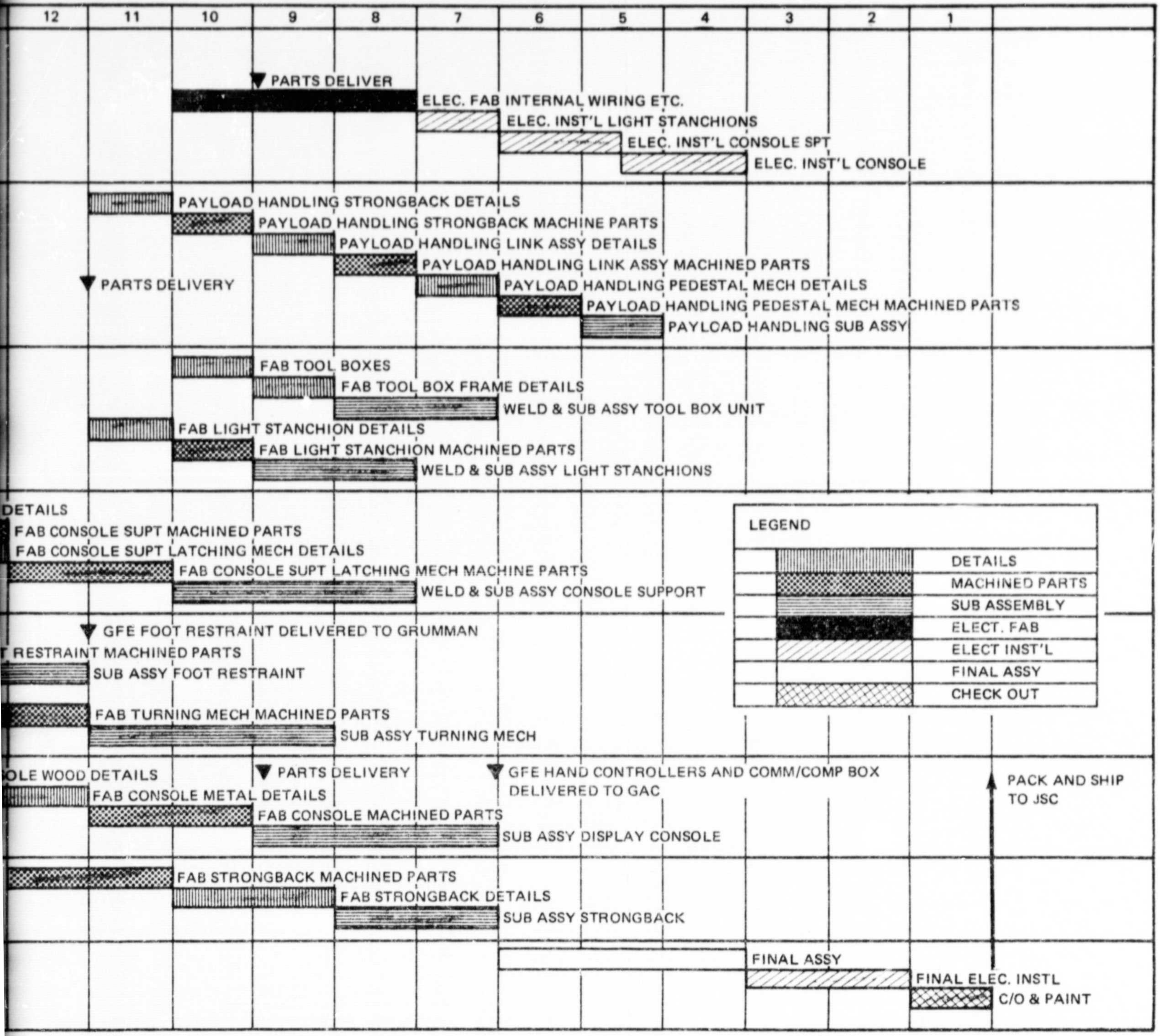

Figure 7. OCP-DTA Manufacturing Schedule

FOLDOUT FRAME

2