NASA
Technical
Paper
1946

AVRADCOM
Technical
Report
80-C-21

December 1981

Computer Program for Aerodynamic and Blading Design of Multistage Axial-Flow Compressors

James E. Crouse
and William T. Gorrell

RECEIVED
NASA STI FACILITY
ACCESS DEPT.

(NASA-TP-1946) COMPUTER PROGRAM FOR AERODYNAMIC AND BLADING DESIGN OF MULTISTAGE AXIAL-FLOW COMPRESSORS (NASA) 105 p HC A06/MF A01 CSCL 21E N82-15554 Unclas G3/07 07175

NASA

NASA
Technical
Paper
1946

AVRADCOM
Technical
Report
80-C-21

1981

Computer Program for Aerodynamic and Blading Design of Multistage Axial-Flow Compressors

James E. Crouse
Lewis Research Center
Cleveland, Ohio

William T. Gorrell
Propulsion Laboratory
AVRADCOM Research and Technology Laboratories
Lewis Research Center
Cleveland, Ohio

NASA
National Aeronautics
and Space Administration

Scientific and Technical
Information Branch

PRECEDING PAGE BLANK NOT FILMED

Contents

	Page
Summary	1
Introduction	1
Compressor Design Procedures	2
Input Initialization	2
General Information	2
Calculation Station Data Sets	3
Initialization	5
Iteration	6
Aerodynamic Design	6
Blade Design	8
Terminal Calculations and Output	9
User Information	10
Appendix	
A—Symbols	15
B—Input Parameters for Compressor Design Program	16
C—Development of Equations of Motion into Form Used in Computer Program	27
D—Conic Coordinates of Blade Centerline Path	32
References	38

Summary

A code for computing the aerodynamic design of a multistage axial-flow compressor and, if desired, the associated blading geometry input for internal flow analysis codes is presented. The aerodynamic solution gives velocity diagrams on selected streamlines of revolution at the blade row edges. Blading is defined from stacked blade elements associated with the selected streamlines. The blade element inlet and outlet angles are established through empirical incidence and deviation angle adjustments to the relative flow angles of the velocity diagrams. The blade element centerline is composed of two segments tangentially joined at a transition point. The local blade angle variation of each segment can be specified with a fourth-degree polynomial function of path distance. Blade element thickness also can be specified with fourth-degree polynomial functions of path distance from the maximum thickness point.

Steady axisymmetric flow is assumed; so the aerodynamic problem can be reduced to solving the two-dimensional flow field in the meridional plane. Because the equations of motion as developed herein are only applicable for calculation stations outside the blade rows, stations at the blade edges, but not inside the blade rows, are used. The streamline curvature method is used for the iterative aerodynamic solution. If a blade design is desired, the blade elements are defined and stacked within the aerodynamic solution iteration. Thus the design velocity diagrams can be located at the blade edges.

The program input includes the annulus profile, the overall compressor mass flow, the pressure ratio, and the rotative speed. A number of parameters are input to specify and control the blade row aerodynamics and geometry. There are numerous options for controlling the way information is input and for specifying the amount of output. The output from the aerodynamic solution has an overall blade row and compressor performance summary followed by blade element parameters for the individual blade rows. If desired, blade coordinates in the streamwise direction for internal flow analysis codes and/or coordinates on plane sections through blades for fabrication drawings can be printed and punched.

Introduction

The axial-flow compressor is used for aircraft engines because it has distinct configuration and performance advantages over other compressor types, but the good potential performance is not easily attained. The problem and challenge to the designer is to model the actual flows well enough to adequately predict aerodynamic performance. Progress is continually being made with codes for computing the complex three-dimensional flows in turbomachinery. However, it is extremely difficult to design mechanically acceptable turbomachinery blading by using the direct approach (i.e., specifying inviscid blade surface velocities and computing the blade geometry). Consequently, the more detailed codes are generally used in the analysis mode; that is, the flow field is calculated for a fixed geometry. The current procedure is to establish blading geometry with simpler design codes and then to use the more detailed analysis codes in blade rows where troublesome flow conditions are likely to exist. In this way prototype designs can often be adjusted before hardware is built and tested.

The time and effort needed to get acceptable configurations can be reduced if the design code can be made to yield a good initial solution and if the design and analysis codes can be made more compatible with one another. This compatibility can be achieved (1) if the output from a design code can be directly used by flow and mechanical analysis codes and (2) if corrective adjustments indicated by the analysis codes can effectively be made in the design code. With these objectives in mind a composite aerodynamic and blade design code for axial-flow compressors has been developed. The code and its capabilities are the subjects of this report.

The aerodynamic solution assumes steady, axisymmetric flow and uses a streamline curvature method for calculation stations outside the blade rows. The program is structured so that the empirical correlations (such as those for loss, deviation angle, and incidence angle) can readily be changed when the need or desire exists. The method of describing blading is a compromise between the vast amount of input needed for completely general blade elements and the restrictions of simple shapes. A blade element is defined on a conic surface with thickness applied to a centerline that is composed of two segments tangentially joined at a transition point. The blade angle function of each segment can be defined with a fourth-degree polynomial. Thickness is prescribed by first specifying a maximum thickness value and location. The distribution of thickness in each direction from the maximum thickness location is then prescribed with a fourth-degree polynomial. Finally each polynomial coefficient is defined across

blade elements with a third-degree polynomial function of annulus height.

Compressor Design Procedures

The discussion of the compressor design procedures is organized according to usage in the computer program; so for better orientation an operational overview of the program is given first (table I). The computer program can be divided into three major phases of calculation: (1) the input and initialization phase, (2) the iteration phase, and (3) the terminal calculation phase. In the input and initialization phase the input data are read and interpreted, the calculation stations are located with estimated values for the blade edges, and streamlines are located on the basis of annulus area. Estimates of stagnation temperature and pressure and axial and tangential velocity components are also made for all calculation points in the flow field.

The iteration phase includes both the flow field and the blade design iterations. In the flow field iteration the equations of motion are satisfied in the meridional (r–z) plane for stations that are lines across the flow annulus. At the stations the equations of motion and overall flow continuity are satisfied with fixed values of streamline slope and curvature for a complete computational pass across the annulus. After the overall flow continuity condition at a calculation station is satisfied, the internal streamline intersections with the station lines are updated by solving for the locations that give specified fractions of overall station weight flow. At the completion of a pass through all the calculation stations in the annulus, the new streamline locations are curve fit for new streamline slope and curvature values.

To insure proper location of the blade edge stations, most of the blade design iteration is made concurrent with the flow field iteration. This operation includes the calculation of incidence and deviation angles, the layout and stacking of blade elements, and the realignment of the elements.

The terminal calculation phase performs the final calculations and generates the output. Mass-averaged parameters for the individual and cumulative compressor blade rows are computed and printed first. Then tabulated values of aerodynamic and blading parameters along the station lines are computed and printed. Finally blade section coordinates and other section mechanical properties can be computed and printed if desired.

The program is discussed in greater detail in the following subsections.

Input and Initialization

The basic computational plane is the meriodional (r–z) plane of a cylindrical coordinate system. A graphic view of an example compressor configuration is shown in figure 1. The hub and tip casing walls are fixed input. Calculation stations are located at the blade row leading and trailing edges and at other annular locations for the purpose of locating streamlines. The input data can be classified into two groups: general information and calculation station and blade row information. The input parameters and options, along with the input data format, are described in appendix B. (All mathematical symbols are defined in appendix A.) Additional advice on how to set up the input is given in the section User Information.

General Information

All the general information is read in first. Included are the following:

(1) Compressor rotational speed
(2) Inlet flow rate
(3) Desired compressor pressure ratio
(4) Gas molecular weight
(5) Number of streamlines

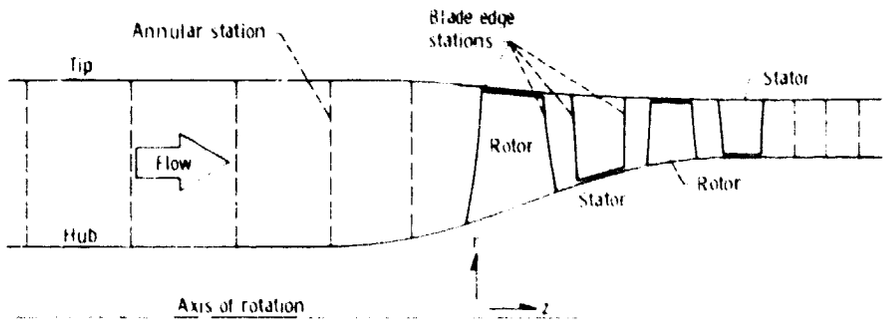

Figure 1. Calculation stations in compressor flow path.

(6) Number of blade rows

(7) Number of annular stations

(8) Coefficients for c_p as a fifth-degree polynomial function of temperature

(9) Far upstream values of total temperature, total pressure, and inlet tangential velocity for each streamline

(10) Streamtube mass flow fractions between streamlines

(11) Sets of points to define tip and hub casing contours

(12) Sets of blade element profile loss parameters that are tabulated as functions of blade element loading parameter and fraction of passage height

As many as five loss sets can be input. The particular loss set used for a given blade row is designated in the blade row input. Usually at least two loss sets are input—one for rotors and another for stators.

Calculation Station Data Sets

The data sets that contain information about the calculation stations and blade rows are read in order from annulus inlet to outlet. The first card of the data set identifies the type of station, the tip and hub axial locations, the tip and hub boundary layer blockage factors and the station mass flow bleed. For annular stations the single card is the whole data set. For rotors and stators several cards are used to describe (1) the blade row inlet and outlet station information, (2) the blade row aerodynamic parameter input and controls, and (3) the parameters defining blade geometry. A blade and the associated edge calculation stations are located in the annulus by using a reference blade element stacking line. Stacking axis tip and hub axial locations and lean angle in the circumferential direction are input.

The locations of the calculation stations at the blade edges are at first approximated from some of the input blade geometry information. The station locations are moved during later iterations when the blade elements are defined and stacked. However, the input tip and hub boundary layer blockages and mass flow bleeds for the inlet and outlet stations are constant.

Aerodynamic parameter input and controls.—The blade aerodynamic design is controlled with several parameters that impose the necessary and sufficient conditions for a solution. The options as to how such conditions can be imposed are shown in table II. For rotors the most convenient option is to specify the stage energy addition as a cumulative fraction of the overall compressor energy addition. With this option the radial distribution of energy addition is not input directly but is imposed through a normalized rotor exit stagnation pressure profile that is expressed as a polynomial function of annulus height in the radial direction. The pressure level is computed internally to the program from the energy input level and the computed losses. With the other rotor options the exit temperature profile is input instead of the energy addition fraction being specified. For either a rotor or stator, stagnation pressure profiles can be input instead of the losses being computed internal to the program. These options can be useful to users who have existing aerodynamic designs but want to use this program for blade description and fabrication coordinates.

At a stator exit a tangential velocity profile is input as a polynomial function of radius. Unless specified, the stator outlet pressure profile is determined from stator losses and streamline mixing effects from the upstream station.

There are some input aerodynamic limits that the program will not allow to be exceeded. For a rotor the limiting parameters are the tip diffusion factor and absolute flow angle at the hub. The stator aerodynamic limits are diffusion factor and inlet Mach number at the hub. If an aerodynamic limit is exceeded during iteration, the stage energy addition is lowered by the amount needed to get the aerodynamic limit within bounds. If any other stage is not up to one of the aerodynamic limits, the energy decrement is made up among such stages. If all the stages reach an aerodynamic limit, the input overall compressor pressure ratio is lowered.

The blade angles are related to fluid flow angles along streamlines by two key correction parameters—incidence angle at the inlet and deviation angle at the outlet (fig. 2). There are several options for specifying each. Two of the options for both the incidence and deviation angles are the two- and three-dimensional methods of reference 1. The other incidence angle option is user-entered tabular

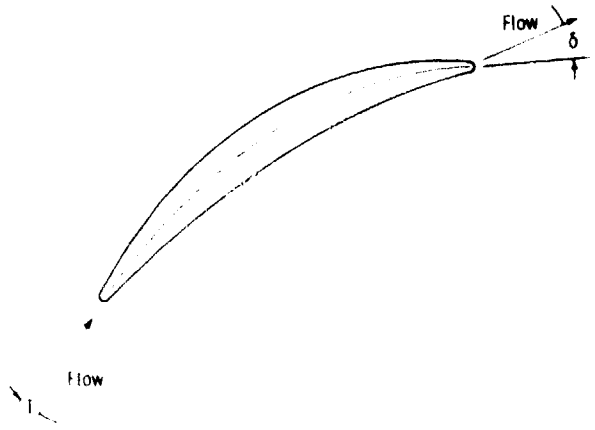

Figure 2. - Blade element incidence and deviation angles.

data referenced to either the centerline or the suction-surface blade angles at the inlet. Other deviation options are user-entered tabular data and a version of Carter's rule, which was modified to account for centerline shapes other than a circular arc. The modification is shown in figure 3.

Another input aerodynamic parameter is the minimum blade choke margin $(A/A^*)-1$, where A is the local streamtube cascade channel area and A^* is the corresponding area needed for choked flow. The A^* value is the area needed to pass the streamtube flow at a relative Mach number of 1.0. The effects of losses in all blade rows and energy addition in rotors are included in the computation of A^*. Choke margin depends on the flow conditions and geometry defining the channel area. If insufficient choke margin exists in a prototype design, some compromise must be made in either the aerodynamic requirements or the geometry. Minor choke margin deficiencies can usually be accommodated with adjustments in geometry. Logical procedures for geometry adjustments are not obvious; however, if the minimum margin occurs at the channel entrance, increased incidence is an effective method of relief. If a minimum desired choke margin is input, the program will adjust incidence angle up to $+2°$ to the leading-edge suction surface in order to attain the specified choke margin if the channel entrance is the problem. When the minimum margin occurs at other locations in the channel, the minimum value and its location are printed in the output and it is up to the user to decide if he wants to make compromises to improve the choke margin.

Blade geometry parameters.—A number of blade geometry parameters are input for the pupose of defining a blade. Blade chord is defined along flow streamlines, but for the purpose of this blade definition a radial projection of streamline chord is specified because it is more meaningful for defining a structurally sound configuration. The radially projected chord is defined from the number of blades, the tip solidity, and a normalized polynomial for the radial variation of chord. The blade is basically defined from a stacked series of gradually changing airfoil shapes or "blade elements" in the radial direction.

Each blade element, as shown in figure 4, is defined from a thickness distribution applied to a two-segment centerline. The variation of the local centerline angles κ with path distance can be specified by option through the parameter IDEF(IROW). If IDEF(IROW) equals zero, the κ for each segment varies linearly with path distance (as a circular arc). When IDEF(IROW) does not equal zero, the κ for each segment is expressed as a fourth-degree polynomial function of path distance. The blade angle is continuous at the transition point, but the rate at which the angle changes with distance (curvature) can be discontinuous. The ratio of curvature for the first segment to that for the second segment is defined as the turning rate ratio. When the blade local centerline angle κ is specified by polynomial coefficients, the turning rate ratio is controlled by the relative magnitudes of the linear term coefficients of the polynomials for each segment. However, when the segments are treated

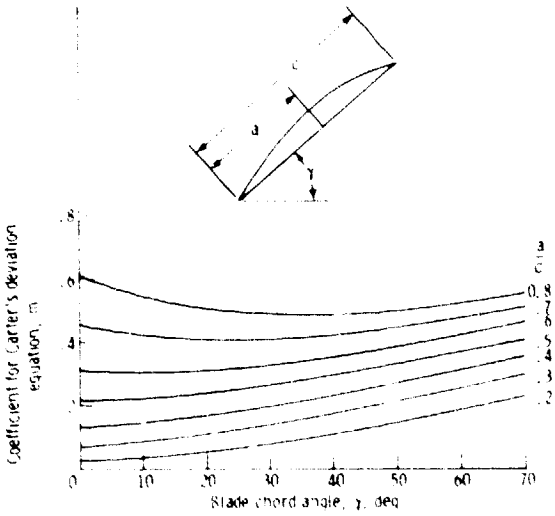

Figure 3. - Variation of coefficient for Carter's deviation equation with location of blade element maximum camber point.

$m = (0.219 + 0.0008916\,\gamma + 0.000027085\,\gamma^2)$
$\times(2a/c)^{(2.175 - 0.0355525\,\gamma + 0.00019167\,\gamma^2)}$

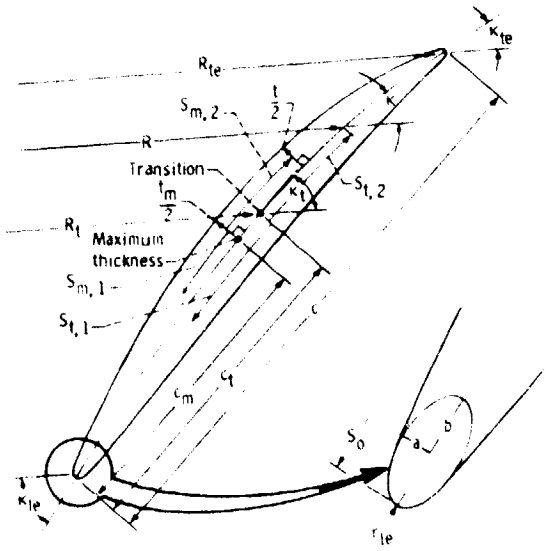

Figure 4. - Reference and direction nomenclature for prescribed blade element centerline and thickness polynomials.

simply as circular arcs, the turning rate ratio is a blade element input parameter.

When IDEF(IROW) equals zero, there are some options for specifying the turning rate ratio at the transition point. With the CIRCULAR option the value is set at 1.0, as for a circular arc blade element, for all blade elements in the blade row. With the TABULAR option a table of values for the elements is read. With the OPTIMUM option a value will be set by an empirical function of inlet relative Mach number. For this option the blade element will be a circular arc below a relative Mach number of 0.8. As relative Mach number increases, the ratio of first- to second-segment turning rate at the transition point is reduced. A limit of zero camber on the suction surface of the first segment is approached at an inlet relative Mach number of about 1.60.

The coefficients for the centerline polynomial (i.e., when IDEF(IROW)$\neq$0) are input as a cubic function of blade span. There are two reasons for this method of specification. First, the user is more confident of specifying a relatively smooth blade surface; and second, the amount of input is reduced over that required by individual coefficients for as many as 11 blade elements.

Blade element surface definition begins with three anchor points from the centerline. These points are a maximum thickness point and the two end points. A maximum thickness value normalized by chord and its location as a fraction of chord are input. At the maximum thickness point the normal-to-centerline distance to each surface is one-half the maximum thickness, and the surface κ angles are equal to the centerline κ.

At the blade element ends the leading- and trailing-edge end circle radii normalized to chord are input. If IDEF(IROW) does not equal zero, the end configurations are ellipses with semimajor axes tangent to the local centerline. For this case the input end circle radius is used as the minimum radius value of the ellipse. For each ellipse one other parameter is input to specify elongation. The parameter is $e=(b/a)-1$, where b and a are the semimajor and semiminor axes, respectively. Note that as e approaches zero, the ellipse approaches a circle with the input radius.

A surface definition criterion is that the surface curve join the end circles or ellipses at a point of tangency. When IDEF(IROW) equals zero, the surface curves are defined with κ being a linear function of path distance for each segment. As explained in reference 2, necessary and sufficient conditions exist to completely define the surfaces when the computation is begun on the segment where the maximum thickness occurs.

When IDEF(IROW) does not equal zero, the blade surfaces for each segment are defined by polynomial distributions of the normal-to-centerline distance. The functional relation for this distance is

$$t=\frac{t_m}{2}-a\sqrt{S_o}+a\sqrt{S-S_o}+\frac{aS}{2\sqrt{S_o}}-bS^2-cS^3-dS^4$$

where S is the centerline distance (normalized by chord) from the maximum thickness point. Values of S are positive in either direction from the maximum thickness point; and S_o is the maximum S, which is the distance to the point where the end ellipse intersects the centerline (fig. 4).

There are two other input parameters for blade rows. One is a material density for rotors. If a nonzero value is input for a rotor, the stacked blade will lean in both the meridional and the r–θ planes so that the centrifugal force on a blade with the input material density will balance the aerodynamic forces at the design point. The objective is to minimize the blade root stress. With atmospheric air as the working fluid, the lean is normally only a fraction of a degree.

The final input parameter, NXCUT, controls the number and location of planes through a blade row for which fabrication coordinates are desired. If the parameter is zero, the program will set the number of XCUT's on the basis of aspect ratio, which is the ratio of overall radial to axial blade lengths. For positive parameter input values the program will determine appropriate locations for that number of planes to represent the blade. Negative parameter values trigger an option to read cards for the XCUT plane values. The number of input values expected for a blade row is the absolute value of the negative parameter.

Initialization

Once the input is read, a number of initialization calculations are made in subroutine START in preparation for the iterative phase of computation. The axial locations of the blade edges are approximated and the intersections of all station lines with the casing walls are determined. Checks are made to be certain that the spacing of calculation stations is appropriate. Annular stations will be shifted by the program if calculation stations cross one another or if adjacent spacing is less than 30 percent of the spacing of neighboring stations.

Streamlines are initially positioned by applying the input stream-tube weight flow fractions to the annulus area. From the input data the circumferential component of velocity and the stagnation temperature and pressure are

approximated for all streamlines at all calculation stations throughout the flow field. Finally an axial velocity is computed for each station by using meanline values in a continuity calculation at the station.

Iteration

The general objective of the program is to obtain both an aerodynamic solution and a blade design. Both are achieved with iterative procedures. The aerodynamic design has the greater sensitivity, and it requires more iterations. The program is set up to do the aerodynamic and blade design iterations concurrently. However, the blade design is done less frequently and lags the aerodynamic iteration. The first blade design iteration occurs on the fourth aerodynamic iteration, and the final blade design pass is made after the aerodynamic solution is printed.

Aerodynamic Design

The aerodynamic design solution establishes complete velocity diagrams and fluid state properties on streamlines at the blade row inlet and exit. A bilevel iteration is used to arrive at the solution. In the outer loop the variables are stagnation temperature and pressure; the tangential component of velocity; and the streamline location, slope, and curvature. The inner loop is the station flow continuity calculation in which the axial component of velocity is the variable and the outer loop parameters are held fixed. An example flow field with typical placement of calculation stations is shown in figure 1.

Outer loop.—In the program the control routine for the outer loop is VDIAG. The basic procedure is station marching from inlet to outlet with streamline parameters fixed. Only after a pass through all the stations are the streamlines relocated from the current flow solution. Normally between 10 and 20 of the cycles are needed to converge to a solution.

The major part of the blade design is also controlled in the outer loop. When a blade design iteration is made, the blade edge station locations are moved to the new blade edge locations.

The tangential velocity and the stagnation temperature and pressure at a station are determined as changes from values of the preceding station on the particular streamline. For annular stations and blade rows the tangential velocity is determined from the conservation of angular momentum; that is, the product of radius and tangential velocity remains the same along streamlines outside the blade rows. Stagnation temperature and pressure should also be conserved along streamlines outside the blade rows except for mixing effects from turbulence and secondary flows. The stagnation pressure distribution is input behind the rotors; so pressure gradients are reasonably well controlled in the design process without using empirical mixing terms.

In the design process the rotor energy addition must cover nonproductive losses in addition to producing a desired pressure. With the usual input options, losses are computed internal to the program. Normally there is a significant radial gradient of loss; so there is also a radial gradient of work. The stagnation temperature increase along a streamline is in almost direct proportion to the blade element work; so temperature gradients are generated. Because these gradients through compressor stages are basically additive, theoretically the gradients can grow very large. The real flows in compressors reduce this effect somewhat with fluid mixing. To at least partially account for fluid mixing in an empirical manner, a mixing term for temperature is used in the program. The mass average temperature is held constant at a station, but specific streamline values outside the blade rows are modified from the previous station values by equation (1).

$$\left(\frac{dT}{dr}\right)_I = \left(\frac{dT}{dr}\right)_{I-1} \exp\left\{-0.002\left(\frac{dT}{dr}\right)_{I-1}(\Delta z)\right\} \quad (1)$$

where Δz is the axial distance between the adjacent stations. Future adjustments in this functional relation are probable as data from multistage compressors become available.

Stagnation temperature and pressure values are the most difficult to set at blade row exits. This is mainly because of the complex real flow effects through a blade row that must be represented either through theoretical models of loss or by empirical correlations. Representation of losses is, of course, one of the major problems for an aerodynamic solution. In this program the losses are represented by two additive components: shock losses, and all other losses.

The shock losses are a modification of those given in reference 3. This reference, in essence, gives the shock loss associated with a normal shock with an approach Mach number equal to the average relative Mach number at the suction and pressure surfaces of the blade at the normal shock. The suction-surface Mach number at the shock is determined by Prandtl-Meyer turning from the inlet.

Unless the flow is in the low transonic range, a normal shock cannot be maintained in a blade channel. Either the shock is oblique or it develops a

foot at the blade surface because the boundary layer cannot sustain the sudden static pressure rise. In either case the shock losses are less than those predicted by a normal shock. To empirically account for these effects, the computed normal shock loss is reduced by dividing by the average inlet relative Mach number squared.

All the other blade row losses—profile, secondary, etc.—are represented by a correlation with fraction of passage height and aerodynamic blade loading. The values for such a correlation are input in tabular form. The aerodynamic blade loading parameter in the table is the diffusion factor of reference 1. In equation form it is

$$D = 1 - \frac{V_2'}{V_1'} + \frac{\Delta(rV_\theta)}{\sigma(r_1 + r_2)V_1'} \tag{2}$$

The loss parameter in the table is

$$\frac{\omega \cos \beta_2'}{2\sigma} \tag{3}$$

where ω is the loss coefficient.

$$\omega = \frac{P_{2t}' - P_2'}{P_1' - p_1} \tag{4}$$

The rotor exit tangential velocity is calculated directly from the Euler equation

$$H_2 - H_1 = \int_{T_1}^{T_2} c_p \, dt = U_2 V_{\theta_2} - U V_{\theta_1} \tag{5}$$

Note that the enthalpy change is evaluated by using an integral for the calorically nonperfect gas; that is, c_p is a function of temperature. All state processes in the program use thermally perfect, but calorically nonperfect, gas relations; so integrations and in some cases iterations are used in several small function routines.

Inner loop.—The basis function of the inner loop is to determine the axial velocity profile at the calculation station. The axial velocity level is set by flow continuity, and the distribution is controlled by the radial equation of motion. The differential equation is developed in appendix C. The form used in the program is

$$V_m \frac{dV_m}{dl} = \left(\frac{T - t}{T}\right)\frac{dH}{dl} + Rt\frac{d \ln P}{dl} - V_\theta \frac{d(rV_\theta)}{r\,dl} + V_m \frac{\partial V_m}{\partial m}\sin(\alpha + \lambda) + \frac{V_m^2}{R_m}\cos(\alpha + \lambda) \tag{6}$$

with

$$\frac{\partial V_m}{\partial m} = \frac{V_m}{M_m^2 - 1}\left[\frac{M_\theta^2 + 1}{r}\sin\alpha + \frac{d\alpha}{dl}\sec(\alpha + \lambda) - \frac{\tan(\alpha + \lambda)}{R_m}\right] \tag{7}$$

A velocity gradient procedure is used to construct the axial velocity profile from the tip to the hub with the stagnation state values, the streamline characteristics, and the tangential component of velocity held fixed. Since this inner loop of the program is used many times, some effort was made to evaluate its accuracy and efficiency for typical streamline spacing. Reasonably good accuracy and stability were found to result from a rather simple procedure. Let

$$\frac{dV_m}{dl} \approx \frac{a}{V_m} + bV_m \tag{8}$$

where

$$a = \left(1 - \frac{t}{T}\right)\frac{dH}{dl} + tR\frac{d \ln P}{dl} - V_\theta \frac{d(rV_\theta)}{dl} \tag{9}$$

and

$$b = \frac{\cos(\alpha + \lambda)}{R_m} + \frac{\sin(\alpha + \lambda)}{M_m^2 - 1} \times \left[\frac{M_\theta^2 + 1}{r}\sin\alpha + \frac{d\alpha}{dl}\sec(\alpha + \lambda) - \frac{\tan(\alpha + \lambda)}{R_m}\right] \tag{10}$$

With a and b constants for the l interval along the station path, the solution for V_m is

$$V_{m_{J+1}}^2 = \left(\frac{a}{b} + V_{m_J}^2\right)e^{2b(l - l_0)} - \frac{a}{b} \tag{11}$$

A two-step procedure is used in the program. First a, b, and V_m values on the streamline j are used to determine a temporary $V_{m,j+1}$. The a and b values are slightly dependent on V_m so $V_{m,j+1}$ is used to determine new a and b values. The second step uses the average of the old and new respective values of a and b to compute a final $V_{m,j+1}$ value. This $V_{m,j+1}$ value will then be used as the current $V_{m,j}$ value for the next l interval.

When V_m values are set on all streamlines, flow continuity is checked by using dr integration of a piecewise cubic curve fit of $\rho V_m r$ values at the streamlines. If the integrated weight flow is not within 0.01 percent of its specified value, the tip reference V_m is adjusted and the V_m profile is reconstructed. The method of adjusting the reference value of V_m is shown graphically in figure 5. There are two solutions to the continuity equation in compressible flow—the subsonic and supersonic solutions. When a parabolic fit of trial solutions is used to get a new trial value of V_m, the lower or subsonic solution is always sought. The V_m adjustment between iterations usually is small; so convergence normally is achieved in three or four passes.

Once convergence is achieved, the profile is back integrated to find the fraction of weight flow points represented by the streamlines. These points are saved until the outer loop pass through all the stations is completed for the purpose of relocating streamlines.

Blade Design

A blade is defined from stacked blade elements. The procedure for laying out blade elements and stacking them for blade definition is given in detail in reference 2. Only a summary description is given herein. A blade element is laid out on a cone with a center axis coincident with the turbomachine axis of rotation. The angle and location of the cone are fixed by the intersection of the streamline with the leading- and trailing-edge station lines of the blade (fig. 6).

The leading- and trailing-edge blade angles are related to aerodynamic flow angles primarily through two key correlation parameters—incidence angle and deviation angle. The user has some options for the specification of these correlation parameters, as already discussed in the section on data input. Application of incidence and deviation angles to the flow angles at the blade edges gives blade angles in the local streamwise direction. Corrections to "cascade" deviation angle for a change in radius and axial velocity are made internally to the program. These corrections are presented in reference 4 to relate deviation angle to a cascade section with equivalent circulation rather than with the same camber angle.

Because the cone angle of the associated blade element is usually a little different from these local streamwise blade angles, corrections are made with current streamwise and radial direction derivatives. The blade element leading- and trailing-edge angles are calculated from aerodynamic flow angles in subroutine BLADE.

Blade element layout.—There are several options for controlling the blade element layout (see the IDEF (IROW) parameter description in appendix B). With all but one of these options a blade element is described by a prescribed thickness applied to a prescribed centerline (fig. 4). The centerline is treated as two segments that are joined at the reference transition point. The rate of change of the local blade angle with path distance, $\kappa = f(s)$ (fig. 4), is controlled by a fourth-degree polynomial for each segment. The coefficients for the polynomials are input, but they are scaled in the program to match blade element inlet and outlet angles. The fourth-degree polynomial

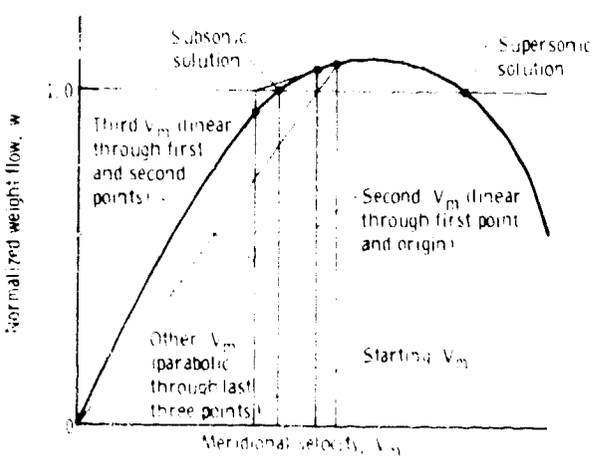

Figure 5. Meridional velocity adjustment for flow continuity iteration.

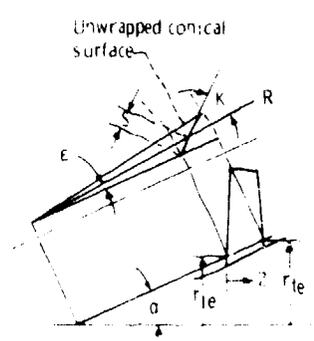

Figure 6. Conical coordinate system for blade element layout.

representation of segment blade angle represents greater specification freedom than does the linear specification of reference 2, where the ratio of inlet-to-outlet segment curvature at the transition point is input rather than any polynomial coefficients. A summary derivation of the equations for the centerline coordinates is given in appendix D.

Blade element thickness is defined along a path that is locally normal to the centerline. The pressure and suction surfaces are equidistant from the centerline. Thickness is specified in both the forward and rearward directions from the maximum thickness point by polynomials of the form

$$\frac{t}{2} = \frac{t_m}{2} - a\sqrt{S_o} + a\sqrt{S_o - S} + \frac{aS}{2\sqrt{S_o}} - bS^2 - cS^3 - dS^4 \qquad (12)$$

The input coefficients are scaled to meet the leading- and trailing-edge ellipses at the appropriate tangency points. The control routine for the blade element layout in the program is CONIC.

Blade element stacking.—The rotating parts of turbomachinery normally operate at high stress levels because of high centrifugal force. The high centrifugal acceleration also causes stress from bending moments to be very sensitive to blade element location. Thus it behooves the designer, first, to be reasonably accurate in the stacking computation and, second, to try to minimize stresses that can be easily reduced—namely, those from the steady-state bending. The blade bending moments from aerodynamic forces can be counterbalanced by centrifugal force moments with slight blade lean in both the $(r\text{-}z)$ and $(r\text{-}\theta)$ planes.

The reference line for stacking purposes is a radial line through the hub stacking reference point (fig. 7). The sections used for stacking alignment are planes normal to this reference line in space. Such planes are used because their centers of area are essentially the centers of centrifugal force also. The stacking line is a line that can be leaned from the reference line at the hub reference point. For alignment purposes the planes pass through the stacking line intersection of blade elements (fig. 7). Blade sections are defined by interpolation across blade elements. When the section center of area does not match the stacking line, the corresponding blade element is translated and rotated on its cone for the stacking adjustment. Normally the adjustments decrease by about an order of magnitude for successive passes through the stacking procedure. For each pass the stacking axis lean angles in both the $(r\text{-}z)$ and $(r\text{-}\theta)$ planes are

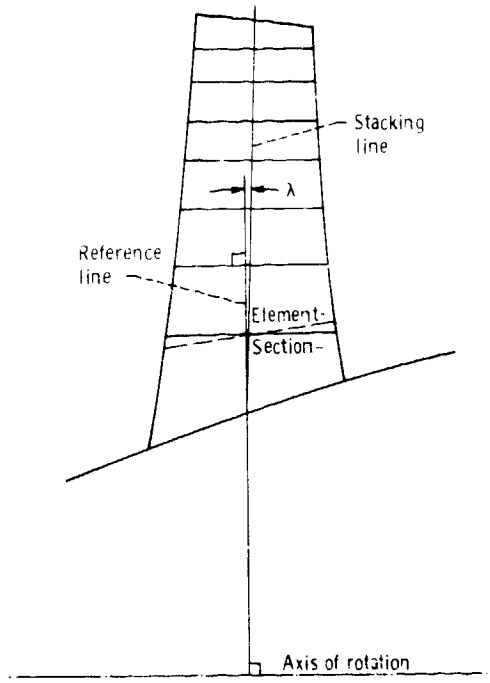

Figure 7. - Location of blade sections for blade element stacking adjustments.

recomputed and adjusted if the stacking axis lean option is activated through the input data.

Terminal Calculations and Output

The program output of an example two-stage compressor is shown in table III. In general the output is printed shortly after its computation so that large arrays of data are not stored. Data are printed from each of the major phases of computation—input, iteration, and terminal. The first information (table III (a)) is the input data, which are printed directly from input routines in very nearly the order in which the input was read.

The second major part of output (table III (b)), from the iterative phase of computation, is printed to help the user monitor the solution. Although these data have little value once the solution is converged, they are quite helpful in disclosing bad input and in finding sources of problems when solutions are not achieved.

For computational stability a station aspect ratio, defined as $(r_t - r_h)/(z_{I+1} - z_I)$, is limited to 7 for streamline fits. When the limit is exceeded, particular stations (according to the priorities set forth in the section User Information) are eliminated from the curve fits used to locate streamlines. The first data shown from the iteration phase are a table of such calculation station information (table II (b)). On the

left is a list of calculation station locations used to compute streamlines, along with the associated aspect ratios. On the right is the input list of station locations and aspect ratios. When blade rows are stacked, the blade edge stations are relocated, and thus the station aspect ratios change. After the first stacking on iteration 4, the station aspect ratios are rechecked and changes in the station list are made if necessary.

Arrays of axial velocities throughout the flow field for each iteration are the bulk of the output printed from the iterative phase of computation. These data are useful for observing solution stability since the solution convergence criterion is based on changes of axial velocity between successive iterations. Some compressor overall parameters are shown above the velocity arrays. Parameters included are the overall values of input pressure (PR), current computed pressure ratio (CPR), enthalpy increase (DHC), and ideal enthalpy increase (DHI).

When the aerodynamic solution is converged, the overall parameters for individual blade rows and the overall cumulative values in the compressor are computed and printed. Overall temperature and pressure values are calculated by mass averaging their equivalent enthalpy values. The cumulative forward axial thrust is the axial force exerted on the rotating shaft by aerodynamic forces from the hub inlet station of the first blade row to the local point. The thrust force shown for individual blade rows is the axial force on the shaft from the trailing edge of the upstream blade to the trailing edge of this blade row. Since the blade forces on stationary blade rows act on the casing, the thrust value on the rotating shaft is simply the static pressure force on the tapered shaft in the forward axial direction. Effects of cavities below the hub flow path are not included since undetermined information about seal locations and pressure differences would be needed. The gas bending moments are values for a single blade. The bending moments are referenced to the stacking axis intersection with the flow path wall from which the blades are attached.

Sets of calculation station data for streamlines across the channel follow the overall data. For all stations, velocity components, streamline slope and curvature, and both stagnation and static values of temperature and pressure are given. For stations at blade row edges, additional information is computed and printed. These parameters are (1) a complete description of velocity triangles, (2) definition of blade elements, (3) relations between aerodynamic and blade angles, (4) aerodynamic performance parameters, (5) streamline choke area margin, (6) local blade force intensity in pounds per radial inch on a blade, and (7) blade edge direction derivatives $r\,d\theta/dr$.

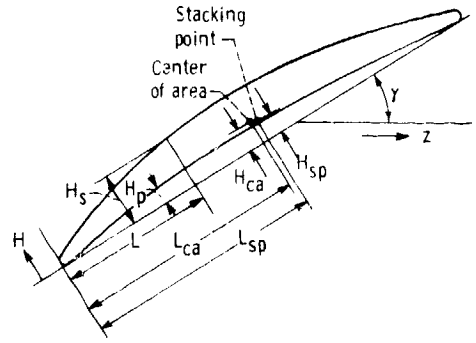

Figure 8. - Coordinate system for blade section output data.

If the input options call for fabrication coordinates, they are printed after all the aerodynamic output. The coordinates are printed in tabular form with four sections on a page, as shown in table III(c). The length coordinate L is a distance along the chord line, with the most forward point being zero (fig. 8). The pressure- and suction-surface height values H_p and H_s, respectively, are referenced from the chord line. Surface height values are given for at least 20 round-value increments of L; also surface coordinates are given for three specific values of L—the blade trailing edge and the leading- and trailing-edge ellipse tangency points with the surfaces.

A blade section's properties are shown above its table of coordinates (table III(c)). The blade section radial location, the L and H stacking point values, and the section setting angle are given to locate and orient the blade section. The blade section center-of-area coordinates, section area, minimum and maximum moments of inertia through the center area, orientation angle of the maximum moment of inertia with respect to the axial direction, section torsion constant, and twist stiffness are all useful information for design and stress analysis.

After all the fabrication coordinates for a given blade row are printed, the blade section coordinates are presented in another orientation that may be more useful for further flow analysis. With a stacking axis reference, coordinates for the same blade sections are given in the axial and tangential directions.

User Information

Since earlier sections of the report discuss the input, output, and main centers of program control, this discussion is directed at the user who is trying to get the program on his computer and to make it run efficiently. Some facts about the program as well as

some advice about the input are given.

The code, which is written in FORTRAN, takes about 80,000 decimal words of computer storage. The call relation among the subroutines is shown graphically in figure 9. Note that the tickmarks on the routine boxes in the figure mean that there are other call lines to the routine. These lines are shown on the other part of the figure where the routine name is repeated. The program running time on either a Univac 1110 or an IBM 360-67 is about 2 minutes for a single-stage compressor and about 5 minutes for a five-stage compressor. Several of the key indices in COMMON/SCALAR/ are described in the following tabulation.

Index	Description
I	calculation station index after preliminary calculations are completed. The program is dimensioned for 50 calculation stations and 20 blade rows, of which only 10 can be rotors. Each blade row accounts for two calculation stations—one at the leading edge of the blade and the other at the trailing edge. Rotors, stators, and annular calculation stations can be put together in any combination with the following constraints: The number of stations cannot exceed 50. There must be at least four annular stations ahead of the first blade row and at least three annular stations behind the last blade row.
IROTOR	rotor index
IROW	blade row index
J	streamline index. Streamlines are numbered from one at the tip.
K	loss set index for subroutine INPUT

As indicated in the table at least four annular stations are expected upstream of the first blade row and at least three downstream of the last blade row. Additional annular stations can be located between blade rows but not within blade rows; that is, not between the inlet and outlet stations of a given blade row.

Streamline intersections of station lines are determined by integrating velocity profiles at station lines to the specified mass flow fractions. Streamline slope and curvature are determined from streamwise curve fits of these intersections. The consequence of this procedure is that the number of iterations and the program convergence characteristics are dependent on the calculation station location although the final solution, in general, is not very dependent on the location of the calculation stations.

The user can reduce the number of iterations and hence the program running time with good placement of calculation stations. The first calculation station should be placed upstream of the first blade row a distance at least equal to two or three annulus heights. The best far-upstream inlet condition is straight axial flow with no wall curvature. Less iterations are usually needed for more widely spaced calculation stations; however, enough iterations should be used to properly locate the streamlines. Calculation station spacing can vary somewhat along the annulus but, as a general guideline, successive station increments should not be changed more than 35 percent.

When calculation stations are input close together, only some of them will be used for locating the streamlines if the station aspect ratio is above 7.0. This is done for program stability and convergence toward a solution. If the user does not specify which stations to eliminate from the streamline location procedure, the program has logic to do so when the station aspect ratio exceeds 7.0. The priority of stations kept for streamline location is as follows: (1) blade row exit stations are always used, (2) blade row inlet stations are kept if the blade row aspect ratio is less than 7.0, and (3) an annular station is kept if neither adjacent station is closer than the aspect ratio tolerance.

The user can also specify that particular annular stations not be used for streamline definition through the alphanumeric station designation. The program looks for ROTO for rotor, STAT for stator, or ANNU for regular annular. Any other combinations of letters, numbers, or symbols designates the station as the extra-annular type. All the computations that are done for regular annular stations also are done for the extra-annular stations. The only difference is that the new streamline locations at that station are not used for the curve fit for streamline parameters. When the new curve fit streamlines are established, their intersections with the station line are found and the streamline parameters at that point are used in the equation-of-motion calculations.

The arrays of points that describe the hub and tip casing contours should extend at least from the furthest upstream calculation station to the furthest downstream one. There should be enough data points to adequately define the desired casing contours with a spline curve fit.

The input boundary layer blockage factors have an option. A displacement thickness from the wall can

be specified instead of blockage as a fraction of annulus height. This is done by using a negative number the magnitude of which is the value of displacement thickness.

A total pressure profile can be input in place of losses. Although the way to activate this option has been discussed earlier, its full effects need to be understood. This option is activated for a particular blade row by using zero or a negative number in ILOSS (IROW). When the option is activated, an additional data card is required for that blade row (fig. 12(a)). The first parameter PTT(IROW), or P_t in the equation, is the blade row tip (larger radius) total pressure in psia. The five other parameters are polynomial constants P_1 to P_5; therefore a total pressure at some other radial location is

$$P=P_t(1.0+P_1R+P_2R^2+P_3R^3+P_4R^4+P_5R^5)$$

where

$$R=\frac{r_t-r}{r_t-r_h}$$

or the fraction of passage height at the blade row exit. Because these coefficients are stored into the locations of loss sets 4 and 5, those loss sets are destroyed for the run even if read in.

When the pressure level is specified instead of losses for the last blade row of the compressor, there is an overspecification of data because the inlet pressure and compressor pressure ratio are input too. In computation the pressure ratio predominates; so the pressure levels will be adjusted as necessary. Also note that when the pressure level is input, the total temperature profile must also be input (table II).

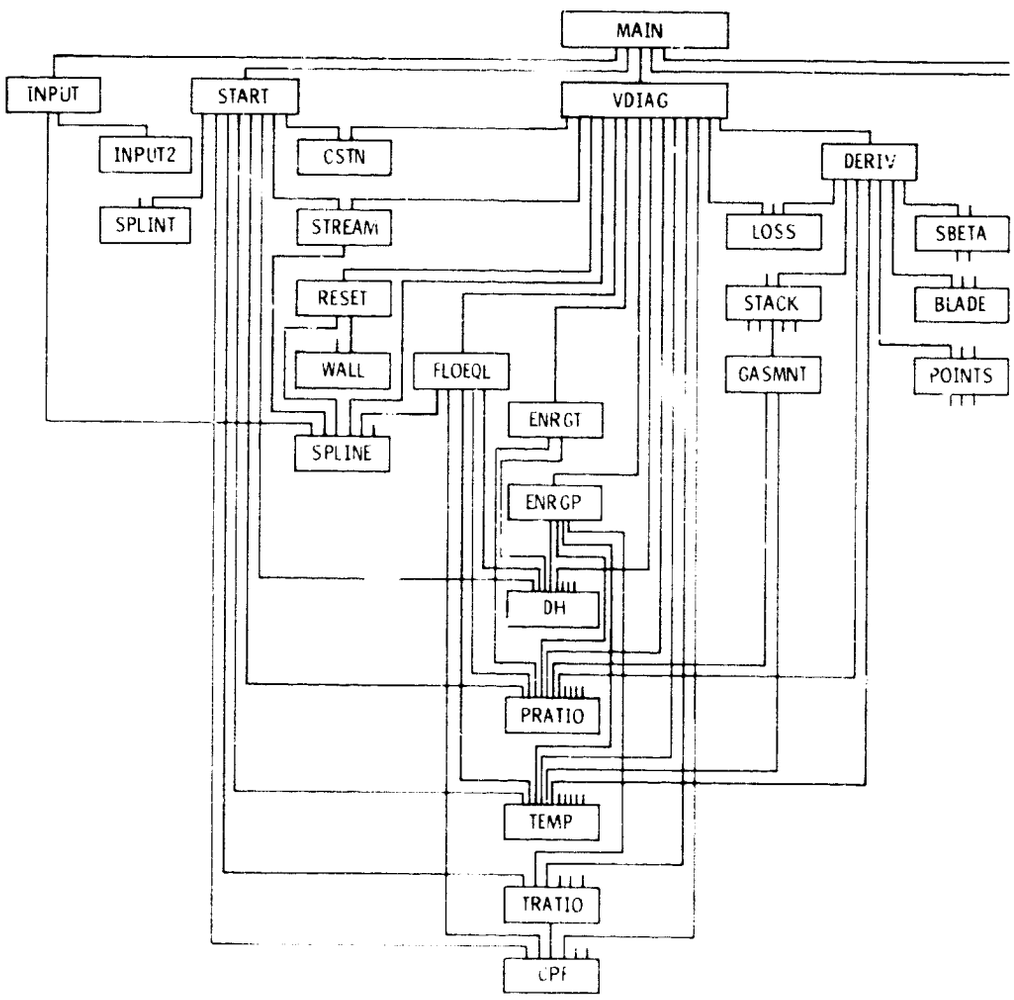

(a) Subroutines used in input and iteration phases.

Figure 9. - Line representation of subroutine calls.

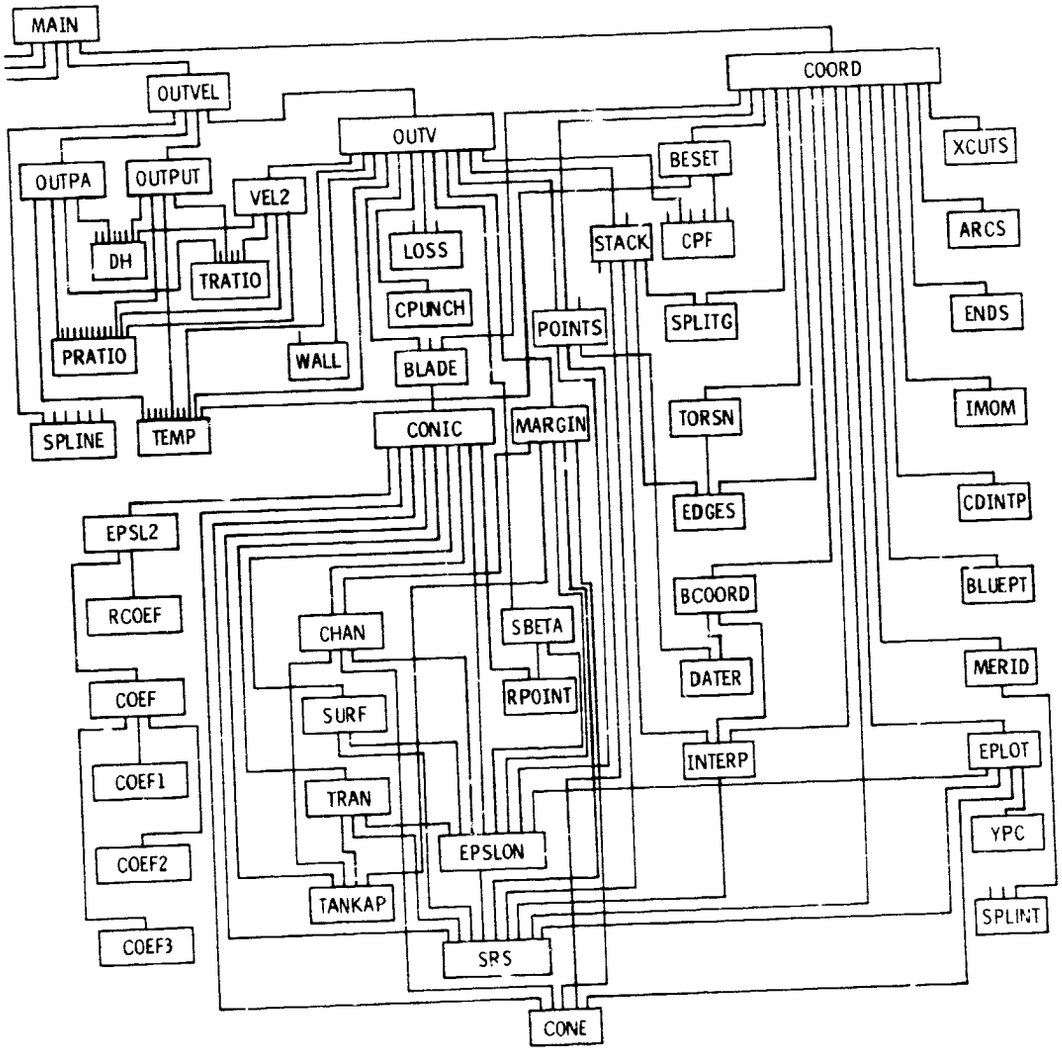

(b) Subroutines used for terminal calculations.

Figure 9. - Concluded.

At a rotor exit the total temperature level can be input in place of the cumulative energy addition fraction. If the input CRENGY (IROTOR) is greater than 2.0, the value is interpeted to be the rotor exit tip temperature in degrees Rankine. In the preexecution phase of computation the temperature is converted and used as an appropriate energy addition value. The polynomial coefficients for the radial distribution of total temperature are input in the former pressure polynomial coefficient locations, PARA(IROW)...PRE(IROW). During regular iteration the program will use the polynomial form for rotor exit total temperature distribution when $|PRA(IROW)| \geq 100.0$. The polynomial coefficient represented by PRA(IROW) is found by adding or subtracting the number of 100's needed to give a remainder in the range -100.0 to 100.0.

When the total temperature level is input, the total pressure level can be set in two ways. It can either be determined from losses or input directly by a polynomial, as discussed earlier in this section.

The description of parameter variations with polynomials assures smoothness, but the specification of polynomial coefficients is not always

easy. In most cases the range of applicability for the polynomial independent variable is 0 to 1.0. This considerably eases the burden on the user since computation is normally not needed to choose and set the polynomial coefficients. When the higher degree terms are used to define distributions, the end conditions are relatively easy to meet. However, some simple computations are needed to check the distribution.

Another caution is that combinations of reasonable-looking numbers often give blade elements that one can judge to be poor by visual observation. The capability to make machine graphic plots of blade elements and the channel formed by adjacent blades is very useful. Such plots are made in subroutine EPLOT, which is activated by the input parameter OPM. Since graphics packages differ with computer systems, the program presented will not necessarily work directly on a user's computer. However, it is suggested that the user make the conversions necessary to plot the blade element surface arrays generated in EPLOT.

The determination of acceptable polynomial coefficients for the centerline and thickness of an entire blade row can be difficult when high-degree terms are used. This task was eased considerably at NASA Lewis with an interactive graphics capability. A series of computer programs were developed to design particular blade elements from actual centerline angle and thickness distributions. These data were then curve fit by least-squares methods to produce the input required by the program described in this report. Visual observaton of blade elements generated by this input for several fractions of annulus height is very helpful in avoiding obviously unacceptable configurations.

The computer peripheral equipment also can be used by some other subroutines when options are activated with the parameter OPO. When the punch option is activated, the tables of fabrication coordinates shown on the listing are punched on cards in subroutine COORD. When the plot option of OPO is activated, subroutine BLUEPT plots tables of fabrication coordinates on a blueprint format. If a plot option is activated by either OPM or OPO, subroutine MERID is also called. It produces a meridional plane plot of the annulus flow path with the calculation stations and streamlines included.

This code is interfaced with three other NASA codes through punched card output. Input for the TSONIC code (ref. 5), which is a blade-to-blade channel flow analysis code, is obtained with the T option of OPM. Input for the MERIDL code (ref. 6), which is a more detailed hub-to-shroud flow analysis code within a blade row, is obtained with the M option of OPO. Input for an off-design performance prediction code that is being developed at NASA Lewis is obtained with the O option of OPM.

The computer program can be obtained from COSMIC, 112 Barrow Hall, University of Georgia, 30601. The COSMIC program number is LEW-13505.

Lewis Research Center
National Aeronautics and Space Administration
Cleveland, Ohio, December 29, 1980

Appendix A

Symbols

A	annulus area; also streamtube channel area
A_i	polynomial constants for as a function of S
a	sonic velocity, ft/sec; also a coefficient in velocity gradient equation; also a polynomial coefficient
b	coefficient in velocity gradient equation; also a polynomial coefficient
C	constant
C_i	polynomial constants for conic radius as a function of S
c	blade chord, in.; also a polynomial coefficient
$c_p(t)$	specific heat function for constant pressure, ft/sec^2 °R
D	blade element diffusion factor
$D_{i,i=1,\infty}$	simplified nomenclature, $D_i = -(C_i)/(i)R_t$
d	polynomial coefficient
f	friction force, ft/sec^2
H	stagnation enthalpy, ft/sec^2
H_p	pressure-surface height, in.
H_s	suction-surface height, in.
h	static enthalpy, ft/sec^2
i	integer index; also incidence angle, deg
j	integer index
k	curvature in curvilinear coordinate system, ft^{-1}; also an integer index
L	distance along chord line, in.
l	distance along calculation station line, in.
M	Mach number
m	streamline direction in meridional plane, in.; also an integer index
n	streamline normal direction in meridional plane, in.
P	stagnation pressure, lb/ft^2
p	static pressure, lb/ft^2
R	conic coordinate radius, in.
$R_{i,i=1,\infty}$	series coefficients for polynomial, $R_t/R = 1 + R_1S + R_2S^2 + R_3S^3 + \ldots$
R_m	radius of curvature in meridional plane, ft
$\mathcal{R}$	gas constant, ft lb/slug °R
r	radius from axis of rotation, in.
S	blade element path distance, in.
s	entropy, ft/sec^2 °R
T	stagnation temperature, °R
t	static temperature, °R; also blade element thickness, in.
U	local blade velocity, ft/sec
u	generalized variable in a differential equation
V	velocity, ft/sec
v	generalized variable in a differential equation
w	weight flow, lb/sec
z	axial distance, in.
α	angle of streamline with reference to axial direction, deg
β	flow angle relative to meridional direction, deg
γ	blade chord angle, deg
δ	deviation angle, deg
ϵ	angular coordinate on blade element layout cone, rad
θ	circumferential direction, rad
κ	blade angle relative to local conic ray, deg
λ	local angle of calculation station line with reference to radial direction, deg
ρ	static density, slug/ft^3
σ	blade element solidity, chord/tangential spacing
τ	time, sec
ω	loss coefficient

Subscripts:

ca	center of area
I	calculation station index
i	ideal value, as by an isentropic process
j	streamline index
le	leading edge
m	streamline direction in meridional plane; also maximum thickness
n	streamline normal direction in meridional plane
o	initial value
sp	stacking point
t	transition point
te	trailing edge
θ	circumferential direction
1	blade row inlet
2	blade row outlet

Superscript:

$(\ )'$	relative to rotor
$(\ )^*$	flow at sonic condition ($M' = 1.0$)

ORIGINAL PAGE IS OF POOR QUALITY

Appendix B

Input Parameters for Compressor Design Program

The input variables for the compressor design program and the associated options are described in this appendix. The format for the input data is given in figures 10 to 12. The calculation station and blade row data sets are input in the order in which they occur in the compressor flow. If any of the sets of option cards for blade rows are needed, they are considered part of the blade row set and they follow the particular basic blade row data set in the order shown in figure 12. The only exception is any XCUT cards that are read in the output routines. These cards are at the end of the input data, but of course the sets of XCUT values must be placed in the same order as the stations specifying them.

In the following list of parameters the independent variable *S* appears frequently. Since it is an important blade element definition variable, this preliminary explanation of its definition and usage is given. The variable *S* in equations for the blade element centerline is the distance in either direction from the transition point as a reference. The variable *S* in equations for the thickness distribution is the distance in either direction from the maximum thickness point as a reference. All four of these usages of *S* are shown in figure 4. In all cases, *S* values are positive away from their reference point. The *S* values for thickness definition are normalized by blade element chord. The *S* values for centerline definition are also normalized by blade element chord when IDEF(IROW) is less than zero; however, when IDEF(IROW) is greater than zero, *S* is normalized to 1.0; that is, the maximum segment *S* is 1.0.

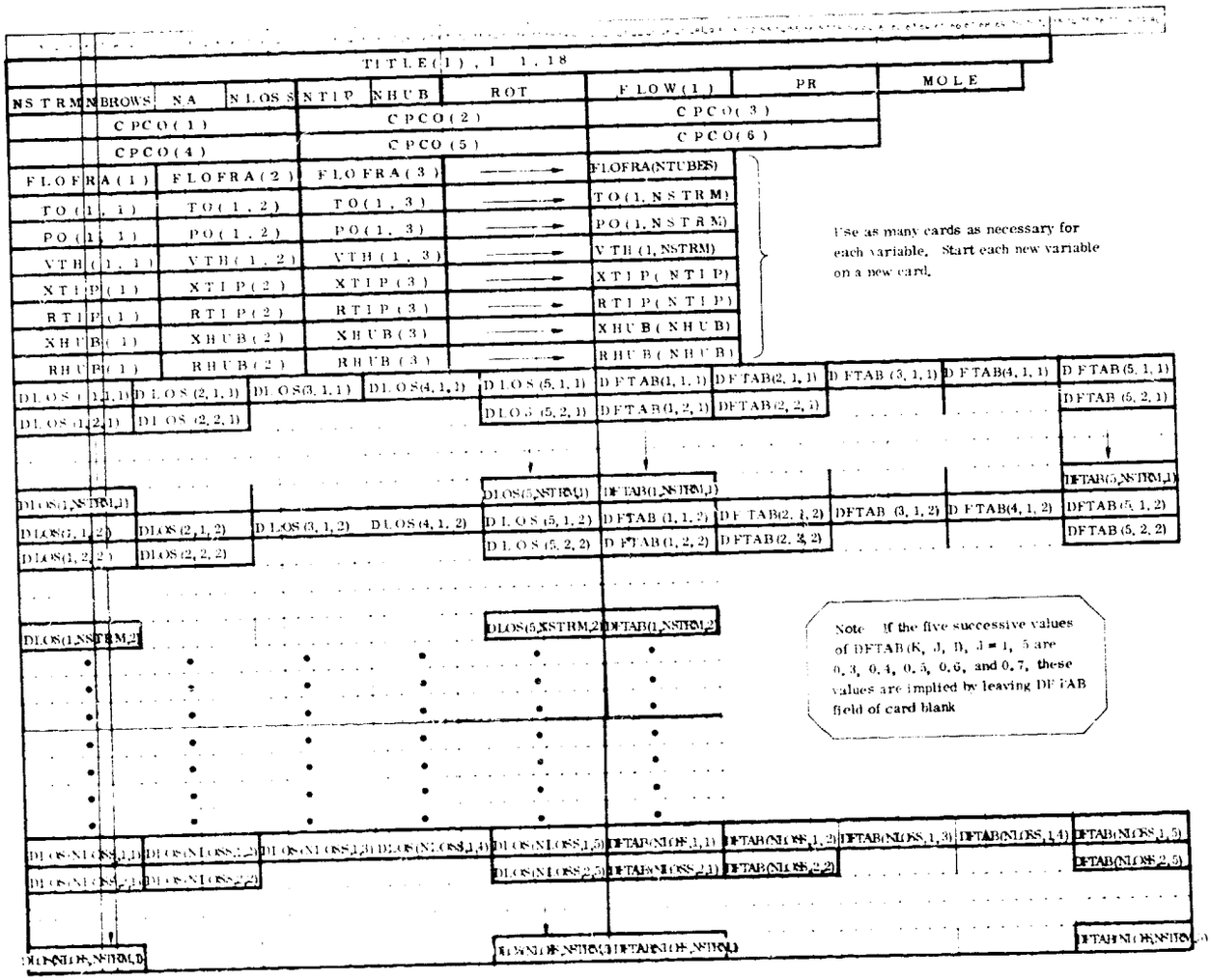

Figure 10. - Input data format of general information.

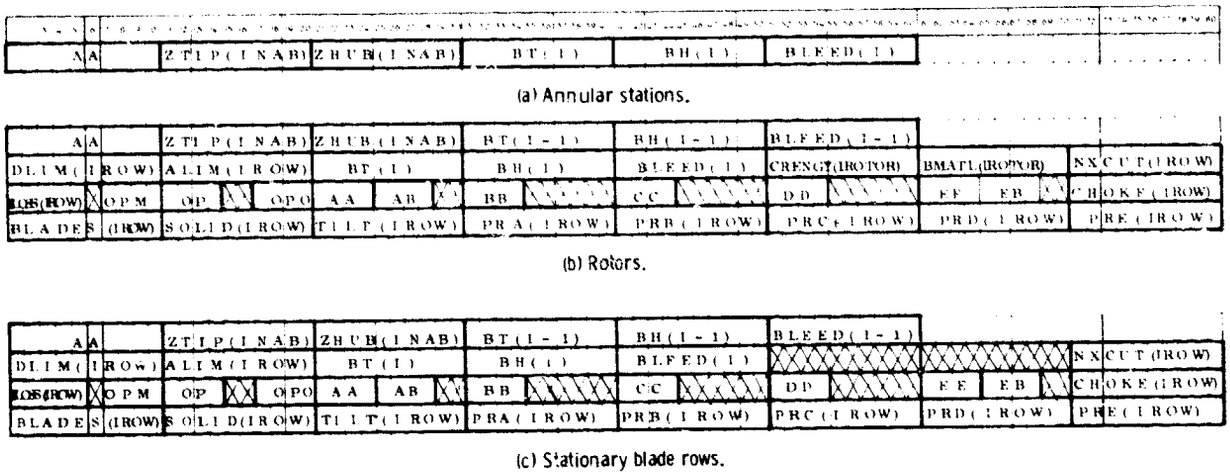

Figure 11. - Input data format of calculation stations and basic blade row information.

Parameter	Description	Format
AA	This parameter is used twice to indicate options in alphanumeric form. As the first term of a data set it indicates the type of calculation station or blade row (ANNULAR, ROTOR, or STATOR). Any station description other than ANNU, ROTO, or STAT will be treated as an extra-annular station, that is, the streamlines will not be forced to pass through the streamtube-fraction-of weight-flow point as determined by continuity at the station. The second use of AA later in the data set is the incidence angle option for blade design purposes. Interpretable options are 2-D, 3-D, SUCTION, and TABLE. A noninterpretable incidence option word is set to the 2-D option. The 2-D and 3-D options mean incidence angles are determined by procedures in reference 1 for the respective option. The suction option gives zero incidence to the suction surface of the blade at the leading edge. The TABLE option means the blade incidence angles for the blade element will be input in tabular form, INC(IROW,J), at the end of the data set.	A4
AB	This parameter completes the incidence TABLE option discussed above. To reference incidence to the suction surface at the leading edge, the eight spaces of the card for AA and AB must read $\underbrace{\text{TABL}}_{\text{AA}}\underbrace{\text{E SS}}_{\text{AB}}$ (If AB is anything other than E SS, the incidence angles will be referenced to the leading-edge centerline.)	A4
ACF(1,IROW), ACF(2,IROW), ACF(3,IROW), ACF(4,IROW)	polynomial coefficients for linear coefficient of blade element centerline angle equation for front segment, $\kappa = \kappa_t + aS + bS^2 + cS^3 + dS^4$ with $a = \text{ACF1} + \text{ACF2}\cdot R + \text{ACF3}\cdot R^2 + \text{ACF4}\cdot R^3$, where $R = (r_t - r)/(r_t - r_h)$—fraction of passage height at blade leading edge	F10.4
ACR(1,IROW), ACR(2,IROW), ACR(3,IROW), ACR(4,IROW)	same as above for rear segment with same R	F10.4

PTC(1,IROW)	PTC(2,IROW)	PTC(3,IROW)	PTC(4,IROW)	PTC(5,IROW)			

(a) If ILOSS(IROW) ≤ 0.

TALE(1,IROW)	TBLE(IROW)	TCLE(IROW)	TDLE(IROW)	TATE(IROW)	TBTE(IROW)	TCTE(IROW)	TDTE(IROW)
TAMAX(1,IROW)	TBMAX(IROW)	TCMAX(IROW)	TDMAX(IROW)	CHORDA(IROW)	CHORDB(IROW)	CHORDC(IROW)	IDEF(IROW)

(b) If OP is DESIGN, COORD, PUNCH, or ALL.

ACF(1,1,IROW)	ACF(2,IROW)	ACF(3,IROW)	ACF(4,IROW)	BCF(1,IROW)	BCF(2,IROW)	BCF(3,IROW)	BCF(4,IROW)
CCF(1,1,IROW)	CCF(2,IROW)	CCF(3,IROW)	CCF(4,IROW)	DCF(1,IROW)	DCF(2,IROW)	DCF(3,IROW)	DCF(4,IROW)
ACR(1,1,IROW)	ACR(2,IROW)	ACR(3,IROW)	ACR(4,IROW)	BCR(1,IROW)	BCR(2,IROW)	BCR(3,IROW)	BCR(4,IROW)
CCR(1,1,IROW)	CCR(2,IROW)	CCR(3,IROW)	CCR(4,IROW)	DCR(1,IROW)	DCR(2,IROW)	DCR(3,IROW)	DCR(4,IROW)
ELE(1,1,IROW)	ELE(2,IROW)	ELE(3,IROW)	ELE(4,IROW)	ETE(1,IROW)	ETE(2,IROW)	ETE(3,IROW)	ETE(4,IROW)
ATF(1,1,IROW)	ATF(2,IROW)	ATF(3,IROW)	ATF(4,IROW)	BTF(1,IROW)	BTF(2,IROW)	BTF(3,IROW)	BTF(4,IROW)
CTF(1,1,IROW)	CTF(2,IROW)	CTF(3,IROW)	CTF(4,IROW)	DTF(1,IROW)	DTF(2,IROW)	DTF(3,IROW)	DTF(4,IROW)
ATR(1,1,IROW)	ATR(2,IROW)	ATR(3,IROW)	ATR(4,IROW)	BTR(1,IROW)	BTR(2,IROW)	BTR(3,IROW)	BTR(4,IROW)
CTR(1,1,IROW)	CTR(2,IROW)	CTR(3,IROW)	CTR(4,IROW)	DTR(1,IROW)	DTR(2,IROW)	DTR(3,IROW)	DTR(4,IROW)

(c) If IDEF(IROW) > 0.

INC(1,IROW,1)	INC(IROW,2)	INC(IROW,3)	INC(IROW,4)	→	INC(IROW,NSTRM)	if AA = TABLE
DEV(1,IROW,1)	DEV(IROW,2)	DEV(IROW,3)	DEV(IROW,4)	→	DEV(IROW,NSTRM)	if BB = TABLE
PHI(IROW,1)	PHI(IROW,2)	PHI(IROW,3)	PHI(IROW,4)	→	PHI(IROW,NSTRM)	if CC = TABLE
TRANS(IROW,1)	TRANS(IROW,2)	TRANS(IROW,3)	TRANS(IROW,4)	→	TRANS(IROW,NSTRM)	if DD = TABLE
ZMAX(1,IROW,1)	ZMAX(IROW,2)	ZMAX(IROW,3)	ZMAX(IROW,4)	→	ZMAX(IROW,NSTRM)	if EE = TABLE

(d) If indicated parameters are TABLE.

VTH(I-1,1)	VTH(I-1,2)	VTH(I-1,3)	VTH(I-1,4)	VTH(I-1,5)	PO(I-1,1)	PO(I-1,2)	PO(I-1,3)	PO(I-1,4)	PO(I-1,5)
VTH(I,1)	VTH(I,2)	VTH(I,3)	VTH(I,4)	VTH(I,5)	PO(I,1)	PO(I,2)	PO(I,3)	PO(I,4)	PO(I,5)

(e) If OP is VEL. DIA.

XCUT(1)	XCUT(2)	XCUT(3)	XCUT(4)	XCUT(5)	XCUT(6)	XCUT(7)		XCUT(8)
XCUT(9)	XCUT(10)	→	XCUT(NC)					
XCUT(1)	XCUT(2)	XCUT(3)	XCUT(4)	XCUT(5)	XCUT(6)	XCUT(7)		XCUT(8)

(f) If NXCUT(IROW) < 0.

Figure 12. - Input data format of additional blade row information if needed by the options.

Parameter	Description	Format
ALIM(IROW)	For a data set designated ROTOR, ALIM(IROW) is the minimum allowable relative flow angle (deg) leaving the rotor hub. For a data set designated STATOR, ALIM(IROW) is the maximum Mach number entering the stator at the hub. The program will reduce the stage energy addition to satisfy these conditions if a limit criterion has been reached during computation. If no aerodynamic limits have been reached in some other stages of a multistage compressor, the program will try to pick up the energy loss of the limiting stage in the stages free of aerodynamic limits. If all stages have reached some aerodynamic limit, the overall compressor pressure ratio is degraded to get all stages within the specified aerodynamic limits. The most efficient way to run the program is to specify the stage energy addition levels so than aerodynamic limits are not reached or at least not reached in a drastic fashion.	

Parameter	Description	Format
ATF(1,IROW), ATF(2,IROW), ATF(3,IROW), ATF(4,IROW)	polynomial coefficients for first coefficient a of blade element thickness equation forward of maximum thickness point $\frac{t}{2c} = \frac{t_m}{2c} - a\left(\sqrt{S_o - S} - \sqrt{S_o} + \frac{S}{2\sqrt{S_o}}\right) - bS^2 - cS^3 - dS^4$ with $a = \text{ATF1} + \text{ATF2}*R + \text{ATF3}*R^2 + \text{ATF4}*R^3$, where R is fraction of passage height at blade leading edge and S_o is distance from maximum thickness point to centerline intersection of edge ellipse (fig. 4)	F10.4
ATR(1,IROW), ATR(2,IROW), ATR(3,IROW), ATR(4,IROW)	same as above for rear ward thickness with same R	F10.4
BB	deviation angle option for blade design purposes. Interpretable options are 2-D, 3-D, TABLE, CARTER, and MODIFY. Noninterpretable input is set to the 2-D option. For the 2-D and 3-D options, deviation angles are determined by procedures of reference 1 for the corresponding option. The CARTER and MODIFY options are now the same in the program. They indicate the use of a Carter's rule with a modification when the front and rear segments of a blade element have different camber rates. The TABLE option means that the blade deviation angles for the blade elements will be input in tabular form, DEV(IROW,J), at the end of the data set.	A4
BCF(1,IROW), BCF(2,IROW), BCF(3,IROW), BCF(4,IROW)	polynomial coefficients for quadratic coefficient of blade element centerline angle equation for front segment, $\kappa = \kappa_f + aS + bS^2 + cS^3 + dS^4$ with $b = \text{BCF1} + \text{BCF2}*R + \text{BCF3}*R^2 + \text{BCF4}*R^3$, where $R = (r_t - r)/(r_t - r_h)$—fraction of passage height at blade leading edge	F10.4
BCR(1,IROW), BCR(2,IROW), BCR(3,IROW), BCR(4,IROW)	same as above for rear segment with same R	F10.4
BH(I)	hub blockage factor for each calculation station; fraction of the station annular area to be allowed for hub annular surface boundary layer blockage. The hub streamline will be displaced away from the physical wall a distance that gives the specified annular fraction. Negative input values are used as the magnitude of boundary layer displacement in inches.	F10.4
BMATL(IROTOR)	rotor material density (lb/in^3). If a positive nonzero number is input, the blade will be stacked so as to balance out gas bending moments with the centrifugal force moment for the material density. Because the hub stacking point stays fixed, the tip location is moved if necessary.	F10.4
BLADES(IROW)	number of blades in each rotor or stator blade row	F10.4
BLEED(I)	fraction of weight flow bled off at particular calculation station	F10.4
BT(I)	same as BH(I) except applicable at tip	F10.4

Parameter	Description	Format
BTF(1,IROW)	polynomial coefficients for quadratic coefficient of blade element thickness equation forward of maximum thickness point $\frac{t}{2c} = \frac{t_m}{2c} + a\left(\sqrt{S_o} - S - \sqrt{S_o} + \frac{S}{2\sqrt{S_o}}\right) - bS^2 - cS^3 - dS^4$ with $b = \text{BTF1} + \text{BTF2}\bullet R + \text{BTF3}\bullet R^2 + \text{BTF4}\bullet R^3$, where R is fraction of passage height at blade leading edge.	F10.4
BTR(1,IROW), BTR(2,IROW), BTR(3,IROW), BTR(4,IROW)	same as above for rearward thickness with same R	F10.4
CC	blade element geometry option for blade design purposes. Interpretable options are CIRCULAR, OPTIMUM, and TABLE. The CIRCULAR option gives circular arc blade elements. Noninterpretable input will be set to the CIRCULAR option. The OPTIMUM option means that the ratio of blade element segment turning rates will be set by an empirical function of inlet relative Mach number. Below an M_1' of 0.8 the blade element will be a circular arc. As M_1' is increased, the ratio of front segment turning rate to rear segment turning rate is reduced. A limit of zero camber on the suction surface of the front segment is approached at an M_1' of about 1.60. The TABLE option means the ratio of blade segment turning rates will be input in tabular form, PHI(IROW,J), at the end of the data set.	A4
CCF(1,IROW), CCF(2,IROW), CCF(3,IROW), CCF(4,IROW)	polynomial coefficients for cubic coefficient of blade element centerline angle equation for front segment, $\kappa = \kappa_t + aS + bS^2 + cS^3 + dS^4$ with $c = \text{CCF1} + \text{CCF2}\bullet R + \text{CCF3}\bullet R^2 + \text{CCF4}\bullet R^3$, where $R = (r_t - r)/(r_t - r_h)$—fraction of passage height at blade leading edge	F10.4
CCR(1,IROW), CCR(2,IROW), CCR(3,IROW), CCR(4,IROW)	same as above for rear segment with same R	F10.4
CHORDA(IROW), CHORDB(IROW), CHORDC(IROW)	constants to define ratio of blade element chord to tip chord on projected plane $\frac{c}{c_{tip}} = 1 + R\bullet\text{CHORDA(IROW)} + R^2\bullet\text{CHORDB(IROW)} + R^3\bullet\text{CHORDC(IROW)}$ where $R = (r_t - r)/(r_t - r_h)$—fraction of annulus height at blade stacking line	F10.4
CHOKE(IROW)	desired minimum value of $(A/A^*) - 1.0$, where A/A^* is the ratio of local streamtube area in the channel to the area required when $M' = 1.0$ within a blade passage. If zero is input, no adjustment will be attempted within the program. For input values greater than zero, incidence angle will be increased as necessary up to a maximum of $+2.0°$ on the leading edge of the suction surface in an attempt to give the specified choke margin at the covered channel entrance if the minimum occurs at the channel inlet.	
CPCO(I) for I = 1,6	constants for specific heat polynomial function of temperature $c_p = \text{CPCO(1)} + \text{CPCO(2)}\bullet T + \text{CPCO(3)}\bullet T^2 + \text{CPCO(4)}\bullet T^3 + \text{CPCO(5)}\bullet T^4 + \text{CPCO(6)}\bullet T^5$	E20.8

Parameter	Description	Format
CRENGY (IROTOR)	desired cumulative energy addition fraction through particular rotor to total energy addition of compressor. Thus the fractions are progressively larger positive numbers through successive rotors. The last rotor must have CRENGY = 1.0 to meet the input pressure ratio. If a value greater than 2.0 is input, the value is interpreted as a rotor exit total temperature level in degrees Rankine instead of the cumulative energy addition fraction. In the preexecution phase of computation the input temperature is converted and used as an appropriate energy addition value.	F10.4
CTF(1,IROW), CTF(2,IROW), CTF(3,IROW), CTF(4,IROW)	polynomial coefficients for cubic coefficient of blade element thickness equation forward of maximum thickness point $\frac{t}{2c} = \frac{t_m}{2c} + a\left(\sqrt{S_o - S} - \sqrt{S_o} + \frac{S}{2\sqrt{S_o}}\right) - bS^2 - cS^3 - dS^4$ with $c = \text{CTF1} + \text{CTF2}*R + \text{CTF3}*R^2 + \text{CTF4}*R^3$, where R is fraction of passage height at blade leading edge	F10.4
CTR(1,IROW), CTR(2,IROW), CTR(3,IROW), CTR(4,IROW)	same as above for rearward thickness with same R	F10.4
DCF(1,IROW), DCF(2,IROW), DCF(3,IROW), DCF(4,IROW)	polynomial coefficients for fourth degree coefficient of blade element centerline angle equation for front segment, $\kappa = \kappa_t + aS + bS^2 + cS^3 + dS^4$ with $d = \text{DCF1} + \text{DCF2}*R + \text{DCF3}*R^2 + \text{DCF4}*R^3$, where $R = (r_t - r)/(r_t - r_h)$—fraction of passage height at blade leading edge	F10.4
DCR(1,IROW), DCR(2,IROW), DCR(3,IROW), DCR(4,IROW)	same as above for rear segment with same R	F10.4
DD	option control of location of transition point between segments of a blade element. The interpretable options are CIRCULAR, SHOCK, and TABLE. The SHOCK option locates the transition point on the suction surface at the normal shock impingement point from the leading edge of the adjacent blade. The TABLE option means the location of the transition point will be input in tabular form, TRANS (IROW,J), at the end of the data set. The CIRCULAR option and noninterpretable data put the transition point at midchord.	A4
DEV(IROW,J)	deviation angle (deg) that can be specified by option. If the tabular option is used, a value is expected for each streamline starting from the tip.	F10.4
DFTAB(K,J,I)	blade element diffusion factor (D factor) for which profile losses are tabulated. Five values are input for each streamline; that is, K always has values from 1 to 5, J is the streamline index, and I is the loss set index. The maximum number of sets is 5. Because D-factor values normally fall between 0.3 and 0.7, values of 0.3, 0.4, 0.5, 0.6, and 0.7 for DFTAB on a streamline can be implied by leaving the DFTAB values blank. As a consequence of this option the DFTAB cannot be exactly 0.0 when K = 1 if you do not want the implied values of DFTAB.	F8.4
DLIM(IROW)	aerodynamic D-factor limit. In a data set designated ROTOR this limit applies at the tip streamline. For a STATOR data set the limit applies at the hub. The program operates with this limit criterion in the same way as it did with ALIM(IROW).	F10.4

Parameter	Description	Format
DLOS(K,J,I)	profile loss parameter $\omega \cos \beta_2 / 2\sigma$ corresponding to DFTAB(K,J,I) reference arrays	F8.4
DTF(1,IROW), DTF(2,IROW), DTF(3,IROW), DTF(4,IROW)	polynomial coefficient for fourth coefficient of blade element thickness equation forward of maximum thickness point $\frac{t}{2c} = \frac{t_m}{2c} + a\left(\sqrt{S_o} - S - \sqrt{S_o} + \frac{S}{2\sqrt{S_o}}\right) - bS^2 - cS^3 - dS^4$ with $d = \text{DTF1} + \text{DTF2}\bullet R + \text{DTF3}\bullet R^2 + \text{DTF4}\bullet R^3$, where R is fraction of passage height at blade leading edge	F10.4
DTR(1,IROW), DTR(2,IROW), DTR(3,IROW), DTR(4,IROW)	same as above for rear segment with same R	F10.4
EB	EB completes TABLE option of maximum thickness location. If the eight spaces controlling the option appear as $\underbrace{\text{TABL}}_{\text{EE}}\underbrace{\text{E LE}}_{\text{EB}}$ the input values of ZMAX(IROW,J) will be used as the fraction of chord distance from the leading edge. If EB is not as shown, the values of ZMAX(IROW,J) will be used as the fraction of chord distance behind the transition point.	A4
EE	option control of location of maximum thickness point of a blade element. The interpretable options are TRAN and TABLE. The TRAN option and noninterpretable options will set the maximum thickness point at the transition point. The TABLE option means the maximum thickness point location will be input in tabular form, ZMAX(IROW,J), at the end of the data set.	A4
ELE(1,IROW), ELE(2,IROW), ELE(3,IROW), ELE(4,IROW)	coefficients for leading-edge ellipse ratio of semimajor to semiminor axes minus 1 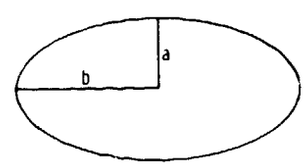 $e = \frac{b}{a} - 1 = \text{ELE1} + \text{ELE2}\bullet R + \text{ELE3}\bullet R^2 + \text{ELE4}\bullet R^3$ where R is fraction of passage height at blade leading edge	F10.4
ETE(1,IROW), ETE(2,IROW), ETE(3,IROW), ETE(4,IROW)	coefficients for trailing-edge ellipse ratio of semimajor to semiminor axes minus 1 $e = \frac{b}{a} - 1 = \text{ETE1} + \text{ETE2}\bullet R + \text{ETE3}\bullet R^2 + \text{ETE4}\bullet R^3$ where R is fraction of passage height at blade trailing edge	
FLOFRA(I)	cumulative weight-flow split between streamlines starting from tip. NTUBES, which is NSTRM-1, values are read. Thus the first value is greater than zero and succeeding values must increase to 1.0 in order for the last value to account for the accumulation of flow for all streamtubes.	F10.4
FLOW(I)	mass flow (lb/sec) entering the first calculation station	F10.4

Parameter	Description	Format
IDEF(IROW)	blade definition index. When the index is zero, the blade segment centerline and surfaces are defined by $d\kappa/dS$ = constant. When the index is not zero, the segment centerline and thickness are defined with fourth-degree functions of path distance from the transition and maximum thickness points, respectively. The specification of the coefficients for these functions is extra input, for which the format is shown in figure 12(c). If IDEF(IROW) is positive, the coefficients for the definition polynomials are interpreted to be functions of segment length normalized to 1.0; but if IDEF(IROW) is negative, the coefficients are interpreted to be functions of segment length normalized by chord. The reference point for the centerline polynomials can be either the transition point or the segment ends. The possible combinations are shown in the IDEF(IROW) summary in table IV.	
ILOSS(IROW)	designation of which profile loss set (I variable in DLOS(K,J,I)) to use with particular blade row. If the input value of ILOSS(IROW) is less than or equal to zero, a total pressure level is input in place of losses. The pressure is input with the parameters shown in the first option of figure 12. These parameters are stored into the locations of loss sets 4 and 5; so those loss sets are not available for use with any blade row.	I5
INC(IROW,J)	incidence angle (deg) that can be input by option. If the tabular option is used, a value is expected for each streamline starting from the tip.	F10.4
MOLE	molecular weight of gas (28.97 for dry air)	I5
NA	number of annular stations at which radial velocity profiles are constructed during computation	I5
NBROWS	number of blade rows (maximum of 20)	I5
NHUB	number of points input to describe hub geometric boundary (maximum of 40)	
NLOSS	number of loss sets input (maximum of 5)	I5
NTIP	number of points input to describe tip geometric boundary (maximum of 40).	
NXCUT	number of sections across blade for which fabrication coordinates are desired. If zero, the program will set the number of XCUT's on the basis of aspect ratio. For all positive values the program will set appropriate locations to represent the blade. Negative values of NXCUT(IROW) trigger an option to read cards for the XCUT values. The number of values expected for a blade row is the absolute value of NXCUT(IROW).	I10
NSTRM	number of streamlines (maximum of 11)	I5
OP	option controlling amount of output information desired. Interpretable options are APPROX, VEL. DIA., DESIGN, and COORD. If the first four characters input in OP match none of the above, the program will try to proceed with the VEL. DIA. option. The program completes only velocity diagram information when run with the APPROX and VEL. DIA. options. With the APPROX option the locations of blade edges are estimated from the stacking line, but with the VEL. DIA. option the blade edge locations are input. The blade edge data are read from extra cards at the end of the data set for a particular blade type. The axial coordinates are temporarily read into VTH(I,J), and the radial coordinates are temporarily read into PO(I,J). When run with the DESIGN and	A4

Parameter	Description	Format
	COORD options, the program designs and stacks that particular blade row. With the DESIGN option only velocity diagram information is printed, but the blade leading- and trailing-edge locations are for the stacked blade. The COORD option includes the printout of blade section properties and coordinates for fabrication.	
OPM	additional output options in effect if OP is DESIGN or COORD	A4

Card column				Additional output
7	8	9	10	
	O			Off-design punch
	T			TSONIC punch
	M			Blade element channel microfilm
	M	O		M and O options
	M	T		M and T options

OPO	Additional output options in effect when OP is COORD	A4

Card column				Additional output
17	18	19	20	
	M			Fabrication coordinate on microfilm
	P			Fabrication coordinate punch
	C			MERIDL punch
	M	P		M and P options
	M	C		M and C options

PHI(IROW,J)	ratio of inlet segment turning to outlet segment turning (ratio of $(d\kappa/dS)_1/(d\kappa/dS)_2$) for a blade element. If input values are expected by use of the tabular option, the data cards go with the optional cards at the end of the data set for each blade row. A value is expected for each streamline beginning from the tip.	F10.4
PRA(IROW), PRB(IROW), PRC(IROW), PRD(IROW), PRE(IROW)	coefficients for polynomial equation to define profile behind blade row. Behind a rotor the pressure ratio profile is specified as $\frac{P}{P_t} = 1.0 + \text{PRA}\cdot R + \text{PRB}\cdot R^2 + \text{PRC}\cdot R^3 + \text{PRD}\cdot R^4 + \text{PRE}\cdot R^5$ where P_t is the stagnation pressure at the rotor exit tip and $R = (r_t - r)/(r_t - r_h)$—a fraction of passage height. When $\lvert\text{PRA(IROW)}\rvert \geq 100.0$, another option is activated. The input profile is for a temperature profile T/T_t instead of a pressure profile P/P_t. The data value of PRA(IROW) is extracted from the input value by adding or subtracting 100's until the remainder is in the range of -100.0 to 100.0. At a stationary blade row the polynomial is for the blade row exit tangential velocity profile in ft/sec. $V_\theta = \text{PRA}/R^2 + \text{PRB}/R + \text{PRC} + \text{PRD}\cdot R + \text{PRE}\cdot R^2$ where $R = r/r_t$	F10.4
PO(I,J)	general stagnation pressure array in lb/ft^2 within program. The I index is the station index and J is the streamline index. Only (PO(1,J), J = 1, NSTRM) values are input; that is, the streamline value for the first calculation station. The input values are read in units of psia.	F10.4
	When blade edge coordinates are input, some of the other PO(I,J) locations are used for temporary storage of the input values of radius.	F8.4
PR	desired overall compressor pressure ratio	F10.4

Parameter	Description	Format
PTT(IROW), PTC(1,IROW), PTC(2,IROW), PTC(3,IROW), PTC(4,IROW), PTC(5,IROW)	coefficients that describe blade row exit profile when it is input as an option. PTT is the blade row exit pressure in psia at the tip (highest radius). The other five values are polynomial coefficients for $P = \text{PTT}*(1.0 + \text{PTC1}*R + \text{PTC2}*R^2 + \text{PTC3}*R^3 + \text{PTC4}*R^4 + \text{PTC5}*R^5$ where $R = (r_t - r)/(r_t - r_h)$—fraction of passage height at blade row exit	F10.4
RHUB(I)	radius coordinates of a set of points that define geometric hub boundary (maximum of 40)	F10.4
ROT	compressor rotational speed, rpm	F10.4
RTIP(I)	radius coordinates of set of points that define geometric tip boundary (maximum of 40)	F10.4
SOLID(IROW)	tip solidity of a blade row (ratio of chord to circumferential spacing)	F10.4
TALE(IROW), TBLE(IROW), TCLE(IROW), TDLE(IROW)	polynomial coefficients of ratio of blade element leading-edge radius to chord, where $t_{le}/c = \text{TALE} + \text{TBLE}*R + \text{TCLE}*R^2 + \text{TDLE}*R^3$ where R $(r_t - r)/(r_t - r_h)$—fraction of passage height at blade leading edge	F10.4
TAMAX(IROW), TBMAX(IROW), TCMAX(IROW), TDMAX(IROW)	polynomial coefficients of ratio of blade element maximum thickness to chord, where $t_{max}/c = \text{TAMAX} + \text{TBMAX}*R + \text{TCMAX}*R^2 + \text{TDMAX}*R^3$	F10.4
TATE(IROW), TBTE(IROW), TCTE(IROW), TDTE(IROW)	polynomial coefficients of ratio of blade element trailing-edge radius to chord, where $t_{te}/c = \text{TATE} + \text{TBTE}*R + \text{TCTE}*R^2 + \text{TCTE}*R^3$ where R $(r_t - r)/(r_t - r_h)$—fraction of passage height at blade trailing edge	F10.4
TILT(IROW)	angle of stacking axis tilt (deg) in circumferential direction (r–θ plane). The angle is positive in the direction of rotor rotation. If |TILT(IROW)| > 100.0, a curved stacking line is specified according to $r - r_{ref} = C(\sin\gamma - \sin\gamma_{ref})$, and the code of the TILT(IROW) is—	

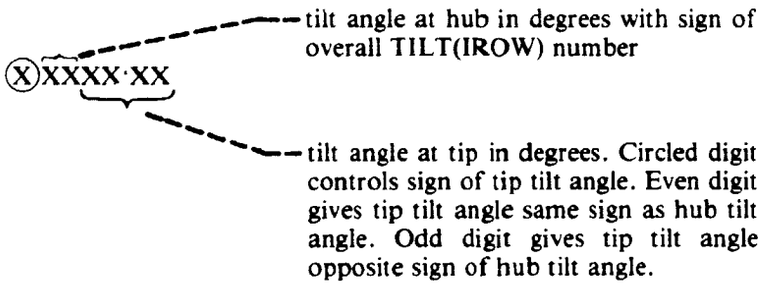

For example: 12332.65 gives a hub angle of 23° and a tip angle of −32.65°.

TITLE(I)	description of compressor for printout and later identification	18A4
TO(I,J)	general stagnation temperature array in program. Only (TO(1,J), J = 1, NSTRM) values are input; that is the streamline value for the first calculation station. The input values are in units of °R.	F10.4

Parameter	Description	Format
TRANS(IROW,J)	location of transition point on blade element centerline as fraction of blade element chord. If input values are expected by use of the tabular option, the data cards go with the optional cards at the end of the data set for each blade row. A value is expected for each streamline beginning from the tip.	F10.4
VTH(I,J)	general tangential component of velocity array in program. Only (VTH(1,J), J = 1, NSTRM) values are input; that is, the streamline value for the first calculation station. The input values have units of ft/sec.	F10.4
	When blade edge coordinates are input, some of the other VTH(I,J) locations are used for temporary storage of the axial coordinates of the points.	F8.4
XCUT(IC)	radial location of blade section planes. Whether or not data cards are read for values of XCUT(IC) for a blade row is controlled by the value of NXCUT (IC). Any XCUT(IC) cards are read in an output routine. Therefore they must follow all cards read in subroutine INPUT; that is, they follow the ANNULAR card for the last calculation station. There is no index identifying the data with a particular blade row, so the data sets for the blade rows are expected in the order that one would see the blade rows in moving through the compressor from the inlet. Start the set of points for each blade row on a new card. It is preferable, but not necessary, to list the XCUT(IC) for a blade row in order starting from the tip.	F10.4
XHUB(I)	axial coordinates of set of points that define geometric hub boundary. The axial extent of the coordinates must at least reach the first and last calculation stations. The hub coordinates must have the same reference origin as other input axial coordinates, that is, casing, blade edge, and stacking line coordinates. The number of points input should be $4 \leq n \leq 40$.	F10.4
XTIP(I)	axial coordinates of set of points that define geometric tip boundary (See XHUB(I) for additional comments.)	F10.4
ZHUB(I)	blade data set hub-axial coordinate. When the data set is a blade rather than an ANNULAR station, ZHUB(I) is the axial location of the blade stacking line at the hub.	F10.4
ZMAX(IROW,J)	location of maximum thickness point as fraction of blade element chord. If input values are expected by use of the tabular options, the data cards go with the optional cards at the end of the data set for each blade row. A value is expected for each streamline beginning from the tip with a leading-edge or transition-point reference according to option (see FB). With a transition point reference the values input are $(m - t)/c$	F10.4

ZTIP	blade data set tip-axial coordinate. (See ZHUB(I) for similar additional comments.)	F10.4

Appendix C

Development of Equations of Motion into Form Used in Computer Program

In the computer program the equations of motion are applied at calculation stations that are presumed to be outside the blade rows; so the equations of motion are more conveniently developed in an absolute, rather than a relative, coordinate system. The general equation of motion (eq. 3(21) of ref. 7) is

$$\frac{\partial \mathbf{V}}{\partial \tau} + \nabla H = \mathbf{V} \times (\nabla \times \mathbf{V}) + t \nabla s + f \tag{C1}$$

When steady flow is assumed and the local friction force is ignored, equation (C1) reduces to

$$\nabla H = \mathbf{V} \times (\nabla \times \mathbf{V}) + t \nabla s \tag{C2}$$

In orthogonal curvilinear coordinates the velocity vector can be expressed as

$$\mathbf{V} = \hat{\theta} V_\theta + \hat{m} V_m + \hat{n} V_n \tag{C3}$$

where m is in the streamline direction in the meridional plane and n is in the normal direction in the meridional plane. Of course V_n is zero everywhere for this application. The curl term in general can be expressed as

$$\nabla \times \mathbf{V} = \hat{\theta}\left(\frac{\partial V_n}{\partial m} + V_n k_n - \frac{\partial V_m}{\partial n} + V_m k_m \right) + \frac{\hat{m}}{r}\left[\frac{\partial (r V_\theta)}{\partial n} - \frac{\partial V_n}{\partial \theta} \right] + \frac{\hat{n}}{r}\left[\frac{\partial V_m}{\partial \theta} - \frac{\partial (r V_\theta)}{\partial m} \right] \tag{C4}$$

where k_m and k_n are the curvature of the streamline and the normal, respectively. All terms containing V_n are zero for this application. The assumption of symmetric flow in the circumferential direction makes $\partial V_m / \partial \theta$ equal to zero. Also, because angular momentum does not change on streamlines outside the blade rows

$$\frac{\partial (r V_\theta)}{\partial m} = 0 \tag{C5}$$

Thus equation (C4) reduces to

$$\nabla \times \mathbf{V} = \hat{\theta}\left(- \frac{\partial V_m}{\partial n} + V_m k_m \right) + \frac{\hat{m}}{r} \frac{\partial (r V_\theta)}{\partial n} \tag{C6}$$

In terms of equations (C3) and (C6) the term $\mathbf{V} \times (\nabla \times \mathbf{V})$ can be expressed as

$$\mathbf{V} \times (\nabla \times \mathbf{V}) = \begin{vmatrix} \hat{\theta} & \hat{m} & \hat{n} \\ V_\theta & V_m & 0 \\ -\dfrac{\partial V_m}{\partial n} + V_m k_m & \dfrac{\partial (r V_\theta)}{r\, \partial n} & 0 \end{vmatrix}$$

$$= \hat{\theta}|0| + \hat{m}|0| + \hat{n}\left[\frac{V_\theta}{r} \frac{\partial (r V_\theta)}{\partial n} + V_m \frac{\partial V_m}{\partial n} - V_m^2 k_m \right] \tag{C7}$$

Now break equation (C2) into the three component equations. In the θ direction

$$\frac{\partial H}{r\, \partial \theta} = t \frac{\partial s}{r\, \partial \theta} = 0 \tag{C8}$$

The zero in equation (C8) recognizes circumferential symmetry of s. In the meridional plane streamline direction

$$\frac{\partial H}{\partial m} = t \frac{\partial s}{\partial m} = 0 \tag{C9}$$

The zero in equation (C9) comes from the assumption that entropy does not change along streamlines that are outside the blade rows. In the meridional plane normal direction

$$\frac{\partial H}{\partial n} = \frac{V_\theta}{r} \frac{\partial (r V_\theta)}{\partial n} + V_m \frac{\partial V_m}{\partial n} - V_m^2 k_m + t \frac{\partial s}{\partial n} \tag{C10}$$

Equations (C8) to (C10) apply to the three curvilinear component directions. However, in the program velocity and state values are available along station lines; so it is of computational convenience to apply a component equation along a station line. To accomplish this objective, the derivatives in the meridional plane are converted from the orthogonal

streamline and normal directions to the generally nonorthogonal streamline and station line directions. The angle nomenclature for the conversion is shown in figure 13.

The enthalpy gradient in the station line direction can be expressed as

$$\frac{dH}{dl} = \nabla H \cdot \bar{l}$$

$$= \frac{\partial H}{r\,\partial\theta}\cdot\frac{d\theta}{dl} + \frac{\partial H}{\partial m}\cdot\frac{dm}{dl} + \frac{\partial H}{\partial n}\cdot\frac{dn}{dl}$$

$$= [0]\cdot[0] + [0]\cdot\sin(\alpha+\lambda) + \frac{\partial H}{\partial n}\cdot\cos(\alpha+\lambda)$$

$$\frac{dH}{dl} = \frac{\partial H}{\partial n}\cos(\alpha+\lambda) \tag{C11}$$

In general a station line derivative can be expressed as

$$\frac{d}{dl} = \frac{\partial}{\partial n}\frac{dn}{dl} + \frac{\partial}{\partial m}\frac{dm}{dl}$$

$$= \frac{\partial}{\partial n}\cos(\alpha+\lambda) + \frac{\partial}{\partial m}\sin(\alpha+\lambda) \tag{C12}$$

When equation (C12) is applied to the other normal derivatives of equation (C10), the following relation develops:

$$\frac{d(rV_\theta)}{dl} = \frac{\partial(rV_\theta)}{\partial n}\cos(\alpha+\lambda) + \frac{\partial(rV_\theta)}{\partial m}\sin(\alpha+\lambda)$$

$$\frac{\partial(rV_\theta)}{\partial n}\cos(\alpha+\lambda) + [0]\sin(\alpha+\lambda)$$

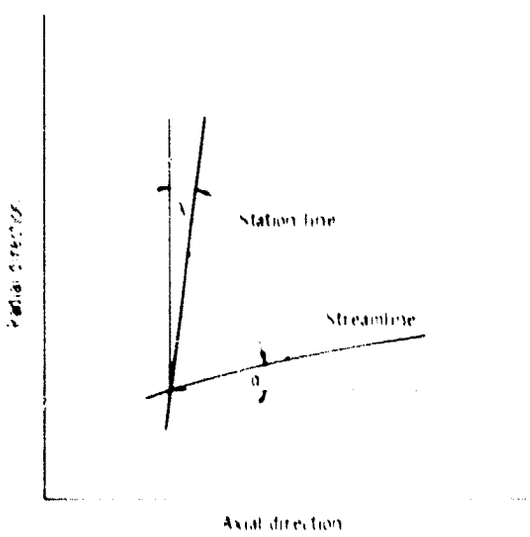

Figure 13. Angle nomenclature for direction derivatives.

Therefore

$$\frac{\partial(rV_\theta)}{\partial n} = \frac{d(rV_\theta)}{dl}\frac{1}{\cos(\alpha+\lambda)} \tag{C13}$$

$$\frac{dV_m}{dl} = \frac{\partial V_m}{\partial n}\cos(\alpha+\lambda) + \frac{\partial V_m}{\partial m}\sin(\alpha+\lambda)$$

Therefore

$$\frac{\partial V_m}{\partial n} = \frac{dV_m}{dl}\frac{1}{\cos(\alpha+\lambda)} - \frac{\partial V_m}{\partial m}\tan(\alpha+\lambda) \tag{C14}$$

$$\frac{ds}{dl} = \frac{\partial s}{\partial n}\cos(\alpha+\lambda) + \frac{\partial s}{\partial m}\sin(\alpha+\lambda)$$

$$= \frac{\partial s}{\partial n}\cos(\alpha+\lambda) + [0]\sin(\alpha+\lambda)$$

Therefore

$$\frac{\partial s}{\partial n} = \frac{ds}{dl}\frac{1}{\cos(\alpha+\lambda)} \tag{C15}$$

The application of equations (C12) through (C15) to (C10) gives

$$\frac{dH}{dl} = \frac{V_\theta}{r}\frac{d(rV_\theta)}{dl} + V_m\frac{dV_m}{dl} - V_m\frac{\partial V_m}{\partial m}\sin(\alpha+\lambda)$$

$$V_m^2 k_m\cos(\alpha+\lambda) + t\frac{ds}{dl} \tag{C16}$$

The streamline curvature k_m is

$$k_m = \frac{\partial\alpha}{\partial m} = \frac{1}{R_m} \tag{C17}$$

where R_m is the meridional plane streamline radius of curvature. Substituting equation (C17) into (C16) yields the following form for the meridional velocity gradient:

$$V_m\frac{dV_m}{dl} = \frac{dH}{dl} - V_\theta\frac{d(rV_\theta)}{r\,dl} + V_m\frac{\partial V_m}{\partial m}\sin(\alpha+\lambda)$$

$$+ \frac{V_m^2}{R_m}\cos(\alpha+\lambda) - t\frac{ds}{dl} \tag{C18}$$

The state properties appearing in equation (C18) are H, t, and s. However, two state properties are sufficient to establish the others at a point. For a

thermally perfect gas ($p=\rho\Re t$) it is rather easy to compute other state properties from two selected properties; so it is desirable from a computer storage standpoint to store only two properties throughout the flow field. The two properties selected were stagnation temperature and pressure. These two properties, along with the velocity components, are sufficient information for the calculation of the other state properties. If these two properties can be used directly in the equations of motion, the need to compute some state properties may not exist. To express s in terms of T and P, start with the property relations

$$\frac{dp}{\rho} = dh - t\,ds \tag{C19}$$

For the introduction of stagnation properties note that the thermodynamic process of moving between the static and stagnation states is isentropic by definition. Thus equation (C19) for this process becomes

$$\frac{dp}{\rho} = dh$$

For a calorically nonperfect gas this becomes

$$\frac{dp}{\rho} = c_p(t)dt$$

$$dp = \left(\frac{p}{\Re t}\right)c_p(t)dt$$

$$\frac{dp}{p} = \frac{1}{\Re}\frac{c_p(t)}{t}dt$$

$$\int_p^P \frac{dp}{p} = \frac{1}{\Re}\int_t^T \frac{c_p(t)}{t}dt$$

$$\ln p\Big|_p^P = \frac{1}{\Re}\int_t^T \frac{c_p(t)}{t}dt$$

$$\frac{P}{p} = \exp\left[\frac{1}{R}\int_t^T \frac{c_p(t)}{t}dt\right] \tag{C20}$$

Equation (C19) used as a derivative with path distance can be written as

$$\frac{ds}{dl} = \frac{1}{t}\frac{dh}{dl} - \frac{1}{\rho t}\frac{dp}{dl} \tag{C21}$$

Substituting equation (C20) gives

$$\frac{ds}{dl} = \frac{1}{t}\frac{dh}{dl} - \frac{1}{\rho t}\times\frac{d\left\{P\exp\left[-1/\Re\int_t^T c_p(t)/t\,dt\right]\right\}}{dl}$$

$$\frac{ds}{dl} = \frac{1}{t}\frac{dh}{dl} - \frac{1}{\rho t}\frac{dP}{dl}\exp\left[-\frac{1}{\Re}\int_t^T \frac{c_p(t)}{t}dt\right] - \frac{P}{\rho t}\exp\left[-\frac{1}{\Re}\int_t^T \frac{c_p(t)}{t}dt\right]\left(-\frac{1}{\Re}\frac{d}{dl}\right)\left[\int_t^T \frac{c_p(t)}{t}dt\right]$$

$$= \frac{1}{t}\frac{dh}{dl} - \frac{1}{\rho t}\frac{dP}{dl}\left(\frac{p}{P}\right) + \frac{P}{\Re\rho t}\left(\frac{p}{P}\right)\frac{d}{dl}\left[\int_t^T \frac{c_p(t)}{t}dt\right]$$

$$= \frac{1}{t}\frac{dh}{dl} - \frac{\Re}{P}\frac{dP}{dl} + \frac{d}{dl}\left[\int_t^T \frac{c_p(t)}{t}dt\right] \tag{C22}$$

The application of Liebnitz's rule to the last term gives

$$\frac{d}{dl}\left[\int_t^T \frac{c_p(t)}{t}dt\right] = \int_t^T \frac{\partial}{\partial l}\frac{c_p(t)}{t}dt + \frac{c_p(T)}{T}\frac{dT}{dl} - \frac{c_p(t)}{t}\frac{dt}{dl}$$

The variable $(c_p(t)/t)$ is not a direct function of path distance; it is a function of temperature alone. Therefore the partial derivative with respect to distance must be zero. Thus the derivative of the integral can be expressed in terms of gradients at the limits so that

$$\frac{d}{dl}\left[\int_t^T \frac{c_p(t)}{t}dt\right] = \frac{c_p(T)}{T}\frac{dT}{dl} - \frac{c_p(t)}{t}\frac{dt}{dl} = \frac{1}{T}\frac{dH}{dl} - \frac{1}{t}\frac{dh}{dl} \tag{C23}$$

Substituting (C23) into (C22) gives

$$\frac{ds}{dl} = \frac{1}{t}\frac{dh}{dl} - \frac{\Re}{P}\frac{dP}{dl} + \frac{1}{T}\frac{dH}{dl} - \frac{1}{t}\frac{dh}{dl}$$

$$\frac{ds}{dl} = \frac{1}{T}\frac{dH}{dl} - \frac{\Re}{P}\frac{dP}{dl} = \frac{1}{T}\frac{dH}{dl} - \frac{1}{\rho_0 T}\frac{dP}{dl} \tag{C24}$$

Equation (C24) is essentially equation (C21) expressed in stagnation state variables. Equation (C24) would turn out to be the same for a calorically perfect gas. Substituting equation (C24) into (C18) gives

$$V_m \frac{dV_m}{dl} = \frac{dH}{dl} - V_\theta \frac{d(rV_\theta)}{r\,dl} + V_m \frac{\partial V_m}{\partial m}\sin(\alpha+\lambda) + \frac{V_m^2}{R_m}\cos(\alpha+\lambda) - \frac{t}{T}\frac{dH}{dl} + \frac{\Re t}{P}\frac{dP}{dl}$$

A rearrangement with all the state property terms together gives

$$V_m \frac{dV_m}{dl} = \left(\frac{T-t}{T}\right)\frac{dH}{dl} + \Re t\frac{d\ln P}{dl} - V_\theta \frac{d(r\,V_\theta)}{r\,dl} + V_m \frac{\partial V_m}{\partial m}\sin(\alpha+\lambda) + \frac{V_m^2}{R_m}\cos(\alpha+\lambda) \tag{C25}$$

All the terms on the right side of equation (C25) can be computed quite accurately except $\partial V_m/\partial m$, which is the gradient of V_m along a streamline in the meridional plane. The distance over which $\partial V_m/\partial m$ changes sign are of the order of the calculation station spacing so that representative values of $\partial V_m/\partial m$ cannot be obtained from a V_m curve fit along meridional streamlines. A better value of this derivative probably can be obtained by means of local continuity. From equation 9(12) of reference 7 differential continuity can be expressed as

$$\frac{1}{\rho}\frac{d\rho}{Dt} + \nabla\cdot V = 0 \tag{C26}$$

However,

$$\frac{1}{\rho}\frac{D\rho}{Dt} = \frac{1}{a^2}\frac{Dh}{Dt}$$

so equation (C26) can be written as

$$\frac{1}{a^2}\frac{Dh}{Dt} + \nabla\cdot V = 0 \tag{C27}$$

Equation (C27) expanded from its vector form is

$$\frac{1}{a^2}\left(\frac{\partial h}{\partial t} + \frac{V_\theta}{r}\frac{\partial h}{\partial \theta} + V_m\frac{\partial h}{\partial m} + V_n\frac{\partial h}{\partial n}\right) + \frac{1}{r}\frac{\partial(r\,V_m)}{\partial m} + \frac{1}{r}\frac{\partial V_\theta}{\partial \theta} + \frac{1}{r}\frac{\partial(r\,V_n)}{\partial n} + V_m k_m + V_n k_n = 0$$

Outside the blade rows the flow is assumed to be axisymmetric and steady. Also, because there is no velocity component normal to the streamline, the equation reduces to

$$\frac{V_m}{a^2}\frac{\partial h}{\partial m} + \frac{1}{r}\frac{\partial(r\,V_m)}{\partial m} + V_m k_m = 0 \tag{C28}$$

Stagnation enthalpy is defined as

$$H = h + \frac{V_m^2}{2} + \frac{V_\theta^2}{2} \tag{C29}$$

$$\frac{dH}{\partial m} = \frac{\partial h}{\partial m} + V_m\frac{\partial V_m}{\partial m} + V_\theta\frac{\partial V_\theta}{\partial m}$$

But because $\partial H/\partial m = 0$ outside the blade rows,

$$\frac{\partial h}{\partial m} = -V_m\frac{\partial V_m}{\partial m} - V_\theta\frac{\partial V_\theta}{\partial m} \tag{C30}$$

Outside the blade rows angular momentum is conserved along streamlines; so

$$0 = \frac{\partial(r\,V_\theta)}{\partial m} = \frac{\partial r}{\partial m}V_\theta + r\frac{\partial V_\theta}{\partial m}$$

Rearrangement gives

$$\frac{\partial V_\theta}{\partial m} = -\frac{V_\theta}{r}\frac{\partial r}{\partial m} = -\frac{V_\theta}{r}\sin\alpha \tag{C31}$$

Substituting equation (C31) into (C30) gives

$$\frac{\partial h}{\partial m} = -V_m \frac{\partial V_m}{\partial m} + \frac{V_\theta^2}{r} \sin\alpha \tag{C32}$$

Substituting equation (C32) into (C28) gives

$$\frac{V_m}{a^2}\left(-V_m \frac{\partial V_m}{\partial m} + \frac{V_\theta^2}{r}\sin\alpha\right) + \frac{V_m}{r}\frac{\partial r}{\partial m}$$

$$+ \frac{\partial V_m}{\partial m} + V_m k_m = 0$$

$$\left(1 - \frac{V_m^2}{a^2}\right)\frac{\partial V_m}{\partial m} + \left(\frac{V_\theta^2}{a^2} + 1\right)\frac{V_m}{r}\sin\alpha + V_m k_n = 0$$

$$\frac{\partial V_m}{\partial m} = \frac{1}{M_{r_i}^2 - 1}\left[\left(M_\theta^2 + 1\right)\frac{V_m}{r}\sin\alpha + V_m k_n\right] \tag{C33}$$

The curvature of the streamline normal k_n, which is $\partial\alpha/\partial n$, needs to be expressed in terms that can be evaluated.

$$\frac{d\alpha}{dl} = \frac{\partial\alpha}{\partial n}\cos(\alpha+\lambda) + \frac{\partial\alpha}{\partial m}\sin(\alpha+\lambda)$$

$$\frac{\partial\alpha}{\partial n} = \frac{d\alpha}{dl}\frac{1}{\cos(\alpha+\lambda)} - \frac{\partial\alpha}{\partial m}\frac{\sin(\alpha+\lambda)}{\cos(\alpha+\lambda)}$$

$$k_n = \frac{\partial\alpha}{\partial n} = \frac{d\alpha}{dl}\sec(\alpha+\lambda) - \frac{\tan(\alpha+\lambda)}{R_m} \tag{C34}$$

Substituting equation (C34) into (C33) gives

$$\frac{\partial V_m}{\partial m} = \frac{V_m}{M_m^2 - 1}\left[\frac{M_\theta^2 + 1}{r}\sin\alpha\right.$$

$$\left. + \frac{d\alpha}{dl}\sec(\alpha+\lambda) - \frac{\tan(\alpha+\lambda)}{R_m}\right] \tag{C35}$$

Calculation of $\partial V_m/\partial m$ by using equation (C35) should give a somewhat more accurate result than a curve fit or a finite difference computation across increments that span whole blade elements. However, a potential divide-by-zero complication has been introduced with the term $M_m^2 - 1$. In equation (C35) the term in braces in essence represents the dA/A term of one-dimensional flow theory. At a Mach number of 1.0, dA/A is zero, which is the throat of a nozzle. For compressor blade rows the throat occurs within the blade passages. Internal flows adjust around locally choked regions so that the throughflow Mach number outside the blade only approaches 1. Computation of the detailed nature of the flow is not available from only stations outside the blade row; so a minimum value is imposed on the denominator through an empirical additive term to help stabilize the iterative procedure. The additive center term is

$$f = 0.1\frac{(M_m^2 - 1)}{|M_m^2 - 1|}\exp\left|-10(M_m^2 - 1)\right|$$

Its characteristics and effect on the denominator are shown in table V.

Appendix D

Conic Coordinates of Blade Centerline Path

Local blade angle is defined with respect to the local conic ray (fig. 14). Let the blade angle vary with path distance along the cone according to the polynomial

$$\kappa = \kappa_t + aS + bS^2 + cS^3 + dS^4 \tag{D1}$$

where κ_t is the blade angle at the transition point between segments in this application. The path distance S is with respect to the transition point reference but always positive in the direction from inlet to outlet.

The conic radial component of the centerline can be found by integrating the differential equation for that component

$$dR = \cos|\kappa| dS = \cos(\kappa_t + aS + bS^2 + cS^3 + dS^4) dS \tag{D2}$$

The problem is that a trigonometric function of a polynomial is not readily integratable in closed form. However, the function can be expanded in series form and integrated term by term. Of course the series is infinite but it is convergent within the range of our application. In the following presentation enough development is given to show the form of the series. Upon application in the program a tolerance is used so that no more terms than necessary are calculated.

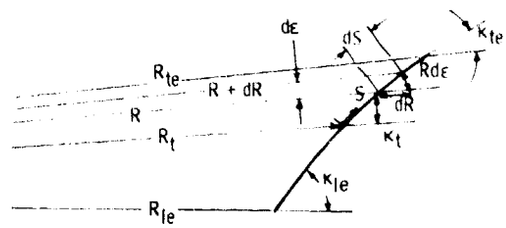

Figure 14. - Blade element centerline nomenclature.

$$\cos\kappa = 1 - \frac{\kappa^2}{2!} + \frac{\kappa^4}{4!} - \frac{\kappa^6}{6!} + \frac{\kappa^8}{8!} \ldots \tag{D3}$$

When equation (D1) is substituted, the terms of like powers of S can be summed to give in symbolic form

$$\cos\kappa = |\ |_1 + |\ |_2 S + |\ |_3 S^2 + |\ |_4 S^3 + \ldots \tag{D4}$$

$$R - R_t = \int_0^S \cos\kappa\, ds = |\ |_1 S + |\ |_2 \frac{S^2}{2} + |\ |_3 \frac{S^3}{3} + |\ |_4 \frac{S^4}{4} \ldots$$

When terms of similar coefficients are combined, the following form evolves:

$$\begin{aligned}
\int \cos\kappa\, dS = {} & \frac{1}{a}\Big[\cos\kappa_t \sin(aS) + \sin\kappa_t \cos(aS)\Big] - \frac{1}{a}\sin\kappa_t \\
& + b\sin\kappa_t\left(-\frac{S^3}{3} + \frac{a^2}{2}\frac{S^5}{5} - \frac{a^4}{4!}\frac{S^7}{7} + \frac{a^6}{6!}\frac{S^9}{9} + \ldots\right) \\
& + b\cos\kappa_t\left(-a\frac{S^4}{4} + \frac{a^3}{3!}\frac{S^6}{6} - \frac{a^5}{5!}\frac{S^8}{8} \ldots\right) \\
& + \frac{b^2}{2}\cos\kappa_t\left(-\frac{S^5}{5} + \frac{a^2}{2}\frac{S^7}{7} - \frac{a^4}{4!}\frac{S^9}{9} \ldots\right) \\
& + \frac{b^2}{2}\sin\kappa_t\left(a\frac{S^6}{6} - \frac{a^3}{3!}\frac{S^8}{8} \ldots\right)
\end{aligned}$$

$$+ \frac{b^3}{3!} \sin \kappa_t \left(\frac{S^7}{7} - \frac{a^2}{2} \frac{S^9}{9} \cdots \right)$$

$$+ \frac{b^3}{3!} \cos \kappa_t \left(a \frac{S^8}{8} \cdots \right)$$

$$+ \frac{b^4}{4!} \cos \kappa_t \left(\frac{S^9}{9} \cdots \right)$$

$$+ b \cos \kappa_t \left\{ -c \frac{S^6}{6} + \frac{a^2 c}{2} \frac{S^8}{8} + \left(\frac{ac^2}{2} - \frac{a^4 c}{4!} \right) \frac{S^{10}}{10} \right.$$

$$\left. + \left[\frac{a^6 c}{6!} - \frac{a^3 c^2}{3!(2)} + \frac{c^3}{3!} \right] \frac{S^{12}}{12} + \left[- \frac{a^8 c}{8!} + \frac{a^5 c^2}{5!(2)} - \frac{a^2 c^3}{2(3!)} \right] \frac{S^{14}}{14} \right\}$$

$$+ b \sin \kappa_t \left\{ ac \frac{S^7}{7} + \left(\frac{c^2}{2} - \frac{a^3 c}{3!} \right) \frac{S^9}{9} + \left[- \frac{a^2 c^2}{2(2)} + \frac{a^5 c}{5!} \right] \frac{S^{11}}{11} + \cdots \right\}$$

$$+ \frac{b^2}{2} \sin \kappa_t \left(c \frac{S^8}{8} - \frac{a^2 c}{2} \frac{S^{10}}{10} + \cdots \right)$$

$$+ \frac{b^2}{2} \cos \kappa_t \left[ac \frac{S^9}{9} + \left(- \frac{a^3 c}{3!} + \frac{c^2}{2} \right) \frac{S^{11}}{11} + \cdots \right]$$

$$+ \frac{b^3}{3!} \cos \kappa_t \left(c \frac{S^{10}}{10} + \cdots \right)$$

$$+ \frac{b^3}{3!} \sin \kappa_t \left(- ac \frac{S^{11}}{11} + \cdots \right)$$

$$+ b \cos \kappa_t \left[- d \frac{S^7}{7} + \frac{a^2 d}{2} \frac{S^9}{9} - \frac{a d}{4!} \frac{S^{11}}{11} + \frac{ad^2}{2} \frac{S^{12}}{2} + \frac{a^6 d}{6!} \frac{S^{13}}{13} \right.$$

$$\left. - \frac{a^3 d^2}{3!(2)} \frac{S^{14}}{14} + \left(- \frac{a^8 d}{8} + \frac{d^3}{3!} \right) \frac{S^{15}}{15} \right]$$

$$+ b \sin \kappa_t \left[ad \frac{S^8}{8} - \frac{a^3 d}{3!} \frac{S^{10}}{10} + \frac{d^2}{2} \frac{S^{11}}{11} + \frac{a^5 d}{5!} \frac{S^{12}}{12} - \frac{a^2 d^2}{2(2)} \frac{S^{13}}{13} \right.$$

$$\left. - \frac{a^7}{7!} \frac{S^{14}}{14} + \frac{a^4 d^2}{4!(2)} \frac{S^{15}}{15} + \left(\frac{a^9 d}{9!} - \frac{ad^3}{3!} \right) \frac{S^{16}}{16} \right]$$

$$+ \frac{b^2}{2} \sin \kappa_t \left(d \frac{S^9}{9} - \frac{a^2 d}{2} \frac{S^{11}}{11} + \frac{a^4 d}{4!} \frac{S^{13}}{13} - \frac{a d^2}{2} \frac{S^{14}}{14} - \frac{a^6 d}{6!} \frac{S^{15}}{15} + \ldots \right)$$

$$+ \frac{b^2}{2} \cos \kappa_t \left(a d \frac{S^{10}}{10} - \frac{a^3 d}{3!} \frac{S^{12}}{12} + \frac{d^2}{2} \frac{S^{13}}{13} + \frac{a^5 d}{5!} \frac{S^{14}}{14} - \frac{a^2}{2} \frac{d^2}{(2)} \frac{S^{15}}{15} + \ldots \right)$$

$$+ \frac{b^3}{3!} \cos \kappa_t \left(d \frac{S^{11}}{11} - \frac{a^2 d}{2} \frac{S^{13}}{13} + \frac{a^4 d}{4!} \frac{S^{15}}{15} - \frac{a d^2}{2} \frac{S^{16}}{16} + \ldots \right)$$

$$+ \frac{b^3}{3!} \sin \kappa_t \left(- a d \frac{S^{12}}{12} + \frac{a^3 d}{3!} \frac{S^{14}}{14} - \frac{d^2}{2} \frac{S^{15}}{15} + \ldots \right)$$

$$+ \frac{b^4}{4!} \sin \kappa_t \left(- d \frac{S^{13}}{13} + \frac{a^2}{2} d \frac{S^{15}}{15} + \ldots \right)$$

$$+ \frac{b^4}{4!} \cos \kappa_t \left(- a d \frac{S^{14}}{14} + \ldots \right)$$

$$+ \frac{b^5}{5!} \cos \kappa_t \left(- d \frac{S^{15}}{15} + \ldots \right)$$

$$+ c \sin \kappa_t \left(- \frac{S^4}{4} + \frac{a^2}{2} \frac{S^6}{6} - \frac{a^4}{4!} \frac{S^8}{8} + \ldots \right)$$

$$+ c \cos \kappa_t \left(- a \frac{S^5}{5} + \frac{a^3}{3!} \frac{S^7}{7} - \frac{a^5}{5!} \frac{S^9}{9} + \ldots \right)$$

$$+ \frac{c^2}{2} \cos \kappa_t \left(- \frac{S^7}{7} + \frac{a^2}{2} \frac{S^9}{9} + \ldots \right)$$

$$+ \frac{c^2}{2} \sin \kappa_t \left(a \frac{S^8}{8} + \ldots \right)$$

$$+ c \cos \kappa_t \left(- d \frac{S^8}{8} + \frac{a^2 d}{2} \frac{S^{10}}{10} + \frac{a^4 d}{4!} \frac{S^{12}}{12} + \frac{a d^2}{2} \frac{S^{13}}{13} + \ldots \right)$$

$$+ c \sin \kappa_t \left(a d \frac{S^9}{9} - \frac{a^3 d}{3!} \frac{S^{11}}{11} + \frac{d^2}{2} \frac{S^{12}}{12} + \frac{a^5 d}{5!} \frac{S^{13}}{13} + \ldots \right)$$

$$+ \frac{c^2}{2} \sin \kappa_t \left(d \frac{S^{11}}{11} - \frac{a^2}{2} d \frac{S^{13}}{13} + \ldots \right)$$

$$+\frac{c^2}{2}\cos\kappa_t\left(ad\frac{S^{12}}{12}+\ldots\right)$$

$$+d\sin\kappa_t\left(-\frac{S^5}{5}+\frac{a^2}{2}\frac{S^7}{7}-\frac{a^4}{4!}\frac{S^9}{9}+\ldots\right)$$

$$+d\cos\kappa_t\left(-a\frac{S^6}{6}+\frac{a^3}{3!}\frac{S^8}{8}+\ldots\right)$$

$$+\frac{d^2}{2}\cos\kappa_t\left(-\frac{S^9}{9}+\ldots\right)$$

$$+abcd\cos\kappa_t\left\{\frac{S^{11}}{11}-\frac{a^2}{3!}\frac{S^{13}}{13}-\frac{ab}{2(2)}\frac{S^{14}}{14}+\left[\frac{a^4}{5!}-\frac{b^2ac}{3!(4)}\right]\frac{S^{15}}{15}\right.$$

$$\left.+\left[\frac{a^3b}{4!(2)}-\frac{bc}{4}\right]\frac{S^{16}}{16}+\left[-\frac{a^6}{7!}+\frac{a^3c}{4!(2)}+\frac{a^2b^2}{(3!)^2}-\frac{c^2}{3!}\right]\frac{S^{17}}{17}\right\}$$

$$+abcd\sin\kappa_t\left\{-\frac{a}{2}\frac{S^{12}}{12}-\frac{b}{2}\frac{S^{13}}{13}+\left(\frac{a^3}{4!}-\frac{c}{2}\right)\frac{S^{14}}{14}+\frac{a^2b}{3!(2)}\frac{S^{15}}{15}\right.$$

$$\left.+\left[-\frac{a^5}{6!}+\frac{ab^2}{2(3!)}+\frac{a^2c}{3!(2)}\right]\frac{S^{16}}{16}+\left[-\frac{a^4b}{5!(2)}+\frac{abc}{8}+\frac{b^3}{4!}\right]\frac{S^{17}}{17}\right\}$$

$$+abc\frac{d^2}{2}\sin\kappa_t\left(-\frac{S^{15}}{15}+\frac{a^2}{3!}\frac{S^{17}}{17}+\ldots\right)$$

$$+abc\frac{d^2}{2}\cos\kappa_t\left(-\frac{a}{2}\frac{S^{16}}{16}+\ldots\right)$$

With these groupings shown, patterns of terms and coefficients can be observed. The whole equation was coded into three rather brief subroutines—one for terms with two coefficients, COEF1 (two of the four coefficients a, b, c, and d); another for terms with three coefficients, COEF2; and one for terms with all four coefficients, COEF3. Finally the coefficients of the terms with the same powers of S are summed: so the [ ] terms are known in

$$R=R_t+[\ ]_1S+[\ ]_2\frac{S^2}{2}+[\ ]_3\frac{S^3}{3}$$

$$+[\ ]_4\frac{S_4}{4}+\ldots+[\ ]_n\frac{S^n}{n}$$

Because in the following developments these coefficients appear frequently within parentheses, for simplicity the [ ]'s are replaced with c's; that is,

$$R=R_t+c_1S+c_2\frac{S^2}{2}+c_3\frac{S^3}{3}+c_4\frac{S^4}{4}+\ldots c_n\frac{S^n}{n} \tag{D6}$$

The conic angular coordinate can be expressed as

$$\epsilon - \epsilon_t = \int_0^S \frac{\sin \kappa}{R} dS \tag{D7}$$

where both $\sin \kappa$ and R can be expressed as infinite, but convergent for our purposes, polynomials of S. Since a polynomial in the denominator is an undesirable form to integrate, the polynomial for R was converted to a polynomial in the numerator of the form shown in equation (D8).

$$\epsilon - \epsilon_t = \int_0^S \frac{\sin \kappa}{R} dS$$

$$= \frac{1}{R_t} \int_0^S \frac{R_t}{R} \sin \kappa \, dS$$

where

$$\frac{R_t}{R} = 1 + R_1 S + R_2 S^2 + R_3 S^3 + \ldots \tag{D8}$$

The conversion from equation (D6) to (D8) begins as

$$\frac{R_t}{R} = \frac{R_t}{R_t + c_1 S + c_2 (S^2/2) + c_3 (S^3/3) + \ldots}$$

$$= \frac{1}{1 + (c_1/R_t)S + (c_2/R_t)S^2 + (c_3/R_t)S^3 + \ldots}$$

$$= \frac{1}{1 - D_1 S - D_2 S^2 - D_3 S^3 - \ldots}$$

where

$$D_1 = -\frac{C_1}{R_t}, \; D_2 = -\frac{C_2}{2R_t}, \; D_3 = -\frac{C_3}{3R_t}, \text{ etc.}$$

$$\begin{array}{l}
\qquad\qquad\qquad\qquad \overbrace{}^{R_1} \; \overbrace{}^{R_2} \; \overbrace{}^{R_3} \; \overbrace{}^{R_4} \\
1 - D_1 S - D_2 S^2 - D_3 S^3 - \ldots \;\overline{\big)\; 1 + D_1 S + (D_2 + D_1^2)S^2 + (D_3 + 2D_1 D_2 + D_1^3)S^3 + (D_4 + 2D_1 D_3 + D_2^2 + 3D_1 D_2 + D_1^4)S^4} \\
\qquad\qquad\qquad\qquad 1 \\
\qquad\qquad\qquad\qquad \underline{1 - D_1 S - D_2 S^2 \qquad - D_3 S^3 \qquad\qquad - D_4 S^4} \\
\qquad\qquad\qquad\qquad D_1 S + D_2 S^2 \qquad + D_3 S^3 \qquad\qquad + D_4 S^4 \\
\qquad\qquad\qquad\qquad \underline{D_1 S - D_1^2 S^2 \qquad - D_1 D_2 S^3 \qquad\qquad - D_1 D_3 S^4} \\
\qquad\qquad\qquad\qquad\qquad (D_2 + D_1^2)S^2 + (D_3 + D_1 D_2)S^3 \qquad + (D_4 + D_1 D_3)S^4 \\
\qquad\qquad\qquad\qquad\qquad \underline{(D_2 + D_1^2)S^2 \; - D_1(D_2 + D_1^2)S^3 \qquad - D_2(D_2 + D_1^2)S^4} \\
\qquad\qquad\qquad\qquad\qquad\qquad (D_3 + 2D_1 D_2 + D_1^3)S^3 + (D_4 + D_1 D_3 + D_2^2 + D_2 D_1^2)S^4 \\
\qquad\qquad\qquad\qquad\qquad\qquad \underline{(D_3 + 2D_1 D_2 + D_1^3)S^3 - D_1(D_3 + 2D_3 + 2D_1 D_2 + D_1^3)S^4} \\
\qquad\qquad\qquad\qquad\qquad\qquad\qquad (D_4 + 2D_1 D_3 + D_2^2 + 3D_1^2 D_2 + D_1^4)S^4
\end{array}$$

Table VI summarizes the preceding division.

The coefficients for equation (D8) are generated in subroutine RCOEF. The coding for the procedure is somewhat complex, but in general not much computation is required to satisfy a tolerance criterion of 1.0E-08.

The conversion of sin κ, where

$$\kappa = \kappa_t + aS + bS^2 + cS^3 + dS^4$$

to the polynomial form

$$\sin \kappa = A_1 + A_2 S + A_3 S^2 + A_4 S^3 + A_5 S^4 \ldots \qquad \text{(D9)}$$

is accomplished in the same way as it was for the cosine series (eqs. (D1) to (D5)). In fact, the cosine series can be converted to the sine series with the following substitutions:

Cosine series	Sine series
$-\sin \kappa_t$	$\cos \kappa_t$
$-\cos \kappa_t$	$-\sin \kappa_t$
$\sin \kappa_t$	$-\cos \kappa_t$
$\cos \kappa_t$	$\sin \kappa_t$

Consequently the same routines that are used to compute the cosine series can easily be modified to compute the sine series coefficients also.

When the polynomial series coefficients in equations (D8) and (D9) are known, the integration for ϵ is straightforward.

$$\epsilon - \epsilon_t = \frac{1}{R_t} \int_0^S \frac{R_t}{R} \sin \kappa$$

$$= \frac{1}{R_t} \int_0^S (1 + R_1 S + R_2 S^2 + R_3 S^3 + \ldots)$$

$$\times (A + A_2 S + A_3 S^2 + A_4 S^3 + \ldots)$$

$$= \frac{1}{R_t} \int_0^S A_1 + (A_2 + R_1 A_1) S$$

$$+ (A_3 + R_1 A_2 + R_2 A_1) S^2$$

$$+ (A_4 + R_1 A_3 + R_2 A_2 + R_3 A_1) S^3 + \ldots$$

$$= \frac{1}{R_t} \left\{ A_1 S + \frac{A_2 + R_1 A_1}{2} S^2 \right.$$

$$+ \frac{A_3 + R_1 A_2 + R_2 A_1}{3} S^3$$

$$\left. + \frac{A_4 + R_1 A_3 + R_2 A_2 + R_3 A_1}{4} S^4 + \ldots \right\}$$

The general routine for establishing the polynomial coefficients for the conic coordinates is EPSL2. The end result is constant polynomial coefficients for the conic coordinates (R and ϵ) as a function of S. These coefficients are saved so that the conic coordinate at any S of interest can be computed easily with subroutine CONE.

References

1. Johnsen, Irving A.; and Bullock, Robert O. eds.: Aerodynamic Design of Axial-Flow Compressors. NASA SP-36, 1965.
2. Crouse, James E.: Computer Program for Definition of Transonic Axial-Flow Compressor Blade Rows. NASA TN D-7345, 1974.
3. Schwenk, Francis C.; Lewis, George W.; and Hartmann, Melvin J.: A Preliminary Analysis of the Magnitude of Shock Losses in Transonic Compressors. NACA RM E57A30, 1957.
4. Seyler, D.R.; and Smith, L. H., Jr.: Single State Experimental Evaluation of High Mach Number Compressor Rotor Blading. Part I—Design of Rotor Blading. (GE-R66FPD321-PT-1, General Electric Co.; NASA Contract NAS3-7617.) NASA CR-54581, 1967.
5. Katsanis, Theodore: FORTRAN Program for Calculating Transonic Velocities on a Blade-to-Blade Stream Surface of a Turbomachine. NASA TN D-5427, 1969.
6. Katsanis, Theodore; and McNally, William D.: Revised FORTRAN Program for Calculating Velocities and Streamlines on Hub-Shroud Midchannel Stream Surface on an Axial-, Radial-, or Mixed-Flow Turbomachine or Annular Duct. I—User's Manual. NASA TN D-8430, 1977.
7. Vavra, Michael H.: Aero-Thermodynamics and Flow in Turbomachines. John Wiley & Sons, Inc., 1960.

TABLE I. - OVERVIEW OF COMPUTER PROGRAM

Program control		
Input and initialization	Iteration	Terminal calculations
Read and interpret data Locate calculation stations At each station for each streamline, estimate stagnation temperature and pressure and axial and tangential velocities	Outer loop: At calculation stations Set coefficients of equation of motion If blade design option, set incidence and deviation angles, compute new blade edge location, and reset calculation station location Inner loop: At each calculation station Solve for meridional velocity distribution to satisfy equations of motion and continuity Reset streamline location	Overall blade row performance on streamlines at calculation station: General State properties (temperature and pressure) Velocity diagrams Streamline information Blade rows Element definition parameters Incidence and deviation angles Aerodynamic performance parameters Streamline choke margin Blade section parameters: Surface coordinates Area, moments, etc.

TABLE II. - OPTIONS FOR SPECIFYING NECESSARY AND SUFFICIENT BLADE ROW CONDITIONS FOR AERODYNAMIC SOLUTION

Rotors	Stators
Cumulative fraction of overall energy addition = CPRDGN(IROTOR) Nondimensional pressure profile at rotor exit $\frac{P}{P_{tip}} = 1 + R*PRA(IROW) + R^2*PRB(IROW) + R^3*PRC(IROW) + R^4*PRD(IROW) + R^5*PRE(IROW)$ where $R = (r_t - r)/(r_t - r_h)$ Losses from tables of DLOS(K, J, I) as function of DFTAB(K, J, I)	Tangential velocity component at stator exit $V_\theta = \frac{PRA(IROW)}{R^2} + \frac{PRB(IROW)}{R} + PRC(IROW) + R*PRD(IROW) + R^2*PRE(IROW)$ where $R = r/r_{tip}$ Losses from tables of DLOS(K, J, I) as function of DFTAB(K, J, I)
Rotor exit temperature profile Stagnation temperature at tip (°R) = CPRDGN(IROTOR) $\frac{T}{T_{tip}} = 1 + R*PRA(IROW) + R^2*PRB(IROW) + R^3*PRC(IROW) + R^4*PRD(IROW) + R^5*PRE(IROW)$ where $R = (r_t - r)/(r_t - r_h)$ Losses from tables of DLOS(K, J, I) as function of DFTAB(K, J, I)	Tangential velocity component at stator exit $V_\theta = \frac{PRA(IROW)}{R^2} + \frac{PRB(IROW)}{R} + PRC(IROW) + R*PRD(IROW) + R^2*PRE(IROW)$ where $R = r/r_{tip}$ Exit stagnation pressure profile Stagnation pressure at tip (psia) = PTT(IROW) $\frac{P}{P_{tip}} = 1 + R*PTC(1, IROW) + R^2*PTC(2, IROW) + R^3*PTC(3, IROW) + R^4*PTC(4, IROW) + R^5*PTC(5, IROW)$ where $R = (r_t - r)/(r_t - r_h)$
Rotor exit temperature profile Stagnation pressure at tip (psia) = PTT(IROW) $\frac{T}{T_{tip}} = 1 + R*PRA(IROW) + R^2*PRB(IROW) + R^3*PRC(IROW) + R^4*PRD(IROW) + R^5*PRE(IROW)$ where $R = (r_t - r)/(r_t - r_h)$ Exit stagnation pressure profile Stagnation pressure at tip (psia) = PTT(IROW) $\frac{P}{P_{tip}} = 1 + R*PTC(1, IROW) + R^2*PTC(2, IROW) + R^3*PTC(3, IROW) + R^4*PTC(4, IROW) + R^5*PTC(5, IROW)$ where $R = (r_t - r)/(r_t - r_h)$	

TABLE III. - EXAMPLE PROBLEM

(a) Input data set

*** INPUT DATA FOR COMPRESSOR DESIGN PROGRAM ***

2-STAGE FAN REDESIGN AR=1.52

THE COMPRESSOR ROTATIONAL SPEED IS 16042.8 RPM

THE DESIRED COMPRESSOR PRESSURE RATIO IS 2.400 .

CALCULATIONS WILL BE PERFORMED ON 11 STREAMLINES.

THE INLET FLOW RATE IS 73.300 (LB/SEC).

THE MOLECULAR WEIGHT IS 28.97

THE COMPRESSOR HAS 4 BLADE ROWS.

CALCULATIONS WILL BE MADE AT THE BLADE EDGES AND AT 17 ANNULAR STATIONS.

THE SPECIFIC HEAT POLYNOMIAL IS IN THE FOLLOWING FORM

CP = 0.23747E 00 + 0.21962E-04*T + -0.87791E-07*T**2 + 0.13991E-09*T**3 + -0.78056E-13*T**4 + 0.15043E-16*T**5

INPUT DISTRIBUTIONS BY STREAMLINE OR STREAMTUBE

STREAMLINE NO.	INLET TOTAL TEMPERATURE (DEG. R.)	INLET TOTAL PRESSURE (PSIA)	INLET WHIRL VELOCITY (FT/SEC)	STREAMTUBE NO.	STREAMTUBE FLOW FRACTION
1	518.700	14.125	0.000	1	0.1000
2	518.700	14.670	0.000	2	0.2000
3	518.700	14.700	0.000	3	0.3000
4	518.700	14.700	0.000	4	0.4000
5	518.700	14.700	0.000	5	0.5000
6	518.700	14.700	0.000	6	0.6000
7	518.700	14.700	0.000	7	0.7000
8	518.700	14.700	0.000	8	0.8000
9	518.700	14.700	0.000	9	0.9000
10	518.700	14.700	0.000	10	1.0000
11	518.700	14.660	0.000		

TABLE III. - Continued.

INPUT DATA POINTS FOR TIP AND HUB CONTOURS.

TIP AXIAL COORDINATE (INCHES)	TIP RADIUS (INCHES)
-14.000	10.100
-7.000	10.100
-3.000	10.100
-1.100	10.170
-0.200	10.080
0.527	9.980
1.100	9.870
2.700	9.650
4.000	9.600
5.610	9.600
7.200	9.600
7.800	9.600
8.400	9.540
9.150	9.440
9.900	9.360
10.600	9.320
11.600	9.300
13.000	9.300
15.300	9.300
16.459	9.300
17.000	9.319
18.000	9.453
18.683	9.623
20.000	10.149
22.000	11.605

HUB AXIAL COORDINATE (INCHES)	HUB RADIUS (INCHES)
-14.000	3.750
-13.100	3.750
-12.200	3.750
-11.300	3.725
-9.900	3.675
-7.800	3.600
-5.700	3.525
-4.800	3.500
-3.590	3.520
-2.000	3.580
-1.250	3.690
0.000	4.000
1.000	4.320
2.500	4.630
3.700	4.800
5.300	4.940
6.100	5.020
6.900	5.090
7.600	5.160
8.700	5.330
9.300	5.450
9.900	5.600
10.700	5.720
11.300	5.800
12.500	5.860
13.700	5.920
14.900	5.960
16.000	6.000
17.000	6.080
18.000	6.253
18.683	6.430
20.000	6.917
22.000	8.093

WARNING ONLY, AT INPUT POINT, 12, THE TIP CONTOUR DATA IS NOT VERY SMOOTH.

TABLE III. - Continued.

THE INPUT PROFILE LOSS TABLES - OMEGA(BAR)*COS(BETA)/(2.0*SIGMA)

** PROFILE LOSS TABLE NO. 1 **

PCT. PASS.	D-FACTOR	LOSS PARAM.	D-FACTOR	LOSS PARAM.	D-FACTOR	LOSS PARAM.	D-FACTOR	LOSS PARAM.	D-FACTOR	LOSS PARAM.
0.00	0.3000	0.0139	0.4000	0.0166	0.5000	0.0203	0.6000	0.0260	0.7000	0.0338
10.00	0.3000	0.0112	0.4000	0.0130	0.5000	0.0160	0.6000	0.0202	0.7000	0.0263
20.00	0.3000	0.0100	0.4000	0.0113	0.5000	0.0132	0.6000	0.0163	0.7000	0.0210
30.00	0.3000	0.0080	0.4000	0.0089	0.5000	0.0103	0.6000	0.0130	0.7000	0.0165
40.00	0.3000	0.0080	0.4000	0.0089	0.5000	0.0103	0.6000	0.0130	0.7000	0.0165
50.00	0.3000	0.0080	0.4000	0.0089	0.5000	0.0103	0.6000	0.0130	0.7000	0.0165
60.00	0.3000	0.0080	0.4000	0.0089	0.5000	0.0103	0.6000	0.0130	0.7000	0.0165
70.00	0.3000	0.0080	0.4000	0.0089	0.5000	0.0103	0.6000	0.0130	0.7000	0.0165
80.00	0.3000	0.0090	0.4000	0.0103	0.5000	0.0122	0.6000	0.0153	0.7000	0.0200
90.00	0.3000	0.0092	0.4000	0.0110	0.5000	0.0140	0.6000	0.0182	0.7000	0.0243
100.00	0.3000	0.0104	0.4000	0.0127	0.5000	0.0168	0.6000	0.0221	0.7000	0.0296

** PROFILE LOSS TABLE NO. 2 **

PCT. PASS.	D-FACTOR	LOSS PARAM.	D-FACTOR	LOSS PARAM.	D-FACTOR	LOSS PARAM.	D-FACTOR	LOSS PARAM.	D-FACTOR	LOSS PARAM.
0.00	0.3000	0.0309	0.4000	0.0336	0.5000	0.0373	0.6000	0.0430	0.7000	0.0508
10.00	0.3000	0.0272	0.4000	0.0290	0.5000	0.0320	0.6000	0.0362	0.7000	0.0423
20.00	0.3000	0.0250	0.4000	0.0263	0.5000	0.0282	0.6000	0.0313	0.7000	0.0360
30.00	0.3000	0.0230	0.4000	0.0239	0.5000	0.0253	0.6000	0.0280	0.7000	0.0310
40.00	0.3000	0.0211	0.4000	0.0220	0.5000	0.0234	0.6000	0.0261	0.7000	0.0296
50.00	0.3000	0.0212	0.4000	0.0222	0.5000	0.0236	0.6000	0.0264	0.7000	0.0299
60.00	0.3000	0.0214	0.4000	0.0226	0.5000	0.0241	0.6000	0.0269	0.7000	0.0306
70.00	0.3000	0.0218	0.4000	0.0231	0.5000	0.0248	0.6000	0.0278	0.7000	0.0317
80.00	0.3000	0.0233	0.4000	0.0248	0.5000	0.0270	0.6000	0.0303	0.7000	0.0347
90.00	0.3000	0.0272	0.4000	0.0290	0.5000	0.0320	0.6000	0.0362	0.7000	0.0423
100.00	0.3000	0.0294	0.4000	0.0317	0.5000	0.0358	0.6000	0.0411	0.7000	0.0486

*** PRINTOUT OF INPUT STATION DATA ***

** INPUT SET NO. 1 IS AN ANNULAR STATION **

TIP AXIAL LOCATION (INCHES)	HUB AXIAL LOCATION (INCHES)	TIP BLOCKAGE FACTOR	HUB BLOCKAGE FACTOR	MASS BLEED FRACTION
-11.0000	-11.0000	0.0000	0.0000	0.0000

** INPUT SET NO. 2 IS AN ANNULAR STATION **

TIP AXIAL LOCATION (INCHES)	HUB AXIAL LOCATION (INCHES)	TIP BLOCKAGE FACTOR	HUB BLOCKAGE FACTOR	MASS BLEED FRACTION
-9.0000	-9.0000	0.0010	0.0010	0.0000

TABLE III. - Continued.

** INPUT SET NO. 3 IS AN ANNULAR STATION **

TIP AXIAL LOCATION (INCHES)	HUB AXIAL LOCATION (INCHES)	TIP BLOCKAGE FACTOR	HUB BLOCKAGE FACTOR	MASS BLEED FRACTION
-7.0000	-7.0000	0.0020	0.0020	0.0000

** INPUT SET NO. 4 IS AN ANNULAR STATION **

TIP AXIAL LOCATION (INCHES)	HUB AXIAL LOCATION (INCHES)	TIP BLOCKAGE FACTOR	HUB BLOCKAGE FACTOR	MASS BLEED FRACTION
-5.2000	-5.2000	0.0030	0.0030	0.0000

** INPUT SET NO. 5 IS AN ANNULAR STATION **

TIP AXIAL LOCATION (INCHES)	HUB AXIAL LOCATION (INCHES)	TIP BLOCKAGE FACTOR	HUB BLOCKAGE FACTOR	MASS BLEED FRACTION
-3.7000	-3.7000	0.0050	0.0050	0.0000

*** PRINTOUT OF INPUT STATION DATA ***

** INPUT SET NO. 6 IS AN ANNULAR STATION **

TIP AXIAL LOCATION (INCHES)	HUB AXIAL LOCATION (INCHES)	TIP BLOCKAGE FACTOR	HUB BLOCKAGE FACTOR	MASS BLEED FRACTION
-2.3000	-2.6000	0.0065	0.0065	0.0000

** INPUT SET NO. 7 IS AN ANNULAR STATION **

TIP AXIAL LOCATION (INCHES)	HUB AXIAL LOCATION (INCHES)	TIP BLOCKAGE FACTOR	HUB BLOCKAGE FACTOR	MASS BLEED FRACTION
-1.0000	-1.5000	0.0080	0.0080	0.0000

TABLE III. - Continued.

*** PRINTOUT OF INPUT STATION DATA ***

** INPUT SET NO. 2 IS ROTOR NO. 1 **

* FOR THIS BLADE ROW THE INPUT OPTION IS DESIGN *

TIP C.G. AXIAL LOCATION (INCHES)	HUB C.G. AXIAL LOCATION (INCHES)	INLET TIP BLOCKAGE	INLET HUB BLOCKAGE	INLET MASS BLEED
0.9410	0.9410	0.0100	0.0100	0.0000
LOSS SET USED	**BLADE TILT ANGLE (DEGREES)**	**OUTLET TIP BLOCKAGE**	**OUTLET HUB BLOCKAGE**	**OUTLET MASS BLEED**
1	0.0000	0.0130	0.0130	0.0000
TIP D FACTOR LIMIT	**HUB FLOW ANGLE LIMIT (DEGREES)**	**TIP SOLIDITY**	**NUMBER OF BLADES**	**CUM ENERGY ADD FRACT**
0.4600	-20.0000	1.3000	22	0.5000

* POLYNOMIAL COEFS. FOR RADIAL PROFILES OF A BLADE AERO. PARAMETER AND BASIC BLADE ELEMENT GEOMETRY PARAMETERS *

COEF.	ROTOR OUTLET PRESSURE	L.E. RADIUS/CHORD	T.E. RADIUS/CHORD	MAX. THICKNESS/CHORD	CHORD/TIP CHORD
CONSTANT		0.0018	0.0018	0.0290	0.0000
LINEAR	0.0000	0.0000	0.0000	0.0000	0.0000
QUADRATIC	0.0000	0.0090	0.0090	0.1680	0.0000
CUBIC	0.0000	-0.0060	-0.0060	-0.1170	0.0000
QUARTIC	0.0000				
QUINTIC	0.0000				

* FUNCTION-OF-PASSAGE-HEIGHT-FROM-TIP POLYNOMIAL COEFFICIENTS FOR GREATER SPECIFICATION OF BLADE ELEMENT GEOMETRY *

RADIAL FUNCTION COEF.	POLY. COEF. FOR 1ST SEG. CENTERLINE ANGLE (FUNCTION OF PATH DIST. FROM TRANS. PT.)			
	LINEAR	QUADRATIC	CUBIC	QUARTIC
CONSTANT	0.50000	1.00000	0.00000	-1.00000
LINEAR	0.50000	-1.00000	0.00000	1.00000
QUADRATIC	0.00000	0.00000	0.00000	0.00000
CUBIC	0.00000	0.00000	0.00000	0.00000

POLY. COEF. FOR 2ND SEG. CENTERLINE ANGLE (FUNCTION OF PATH DIST. FROM TRANS. PT.)			
LINEAR	QUADRATIC	CUBIC	QUARTIC
-1.00000	0.00000	-1.00000	0.00000
0.00000	0.00000	1.00000	0.00000
0.00000	0.00000	0.00000	0.00000
0.00000	0.00000	0.00000	0.00000

ELLIPSE MAJOR/MINOR AXIS RATIO MINUS 1.0	
LEAD.EDGE	TRAIL.EDGE
1.00000	0.00000
-1.00000	0.00000
0.00000	0.00000
0.00000	0.00000

RADIAL FUNCTION COEF.	POLY. COEF. FOR 1ST SEGMENT THICKNESS (FUNCTION OF PATH DIST. FROM MAX.TH. PT.)			
	SQ.ROOT	QUADRATIC	CUBIC	QUARTIC
CONSTANT	0.00000	1.50000	0.00000	0.00000
LINEAR	0.00000	-0.50000	0.00000	0.00000
QUADRATIC	0.00000	0.00000	0.00000	0.00000
CUBIC	0.00000	0.00000	0.00000	0.00000

POLY. COEF. FOR 2ND SEGMENT THICKNESS (FUNCTION OF PATH DIST. FROM MAX.TH. PT.)			
SQ.ROOT	QUADRATIC	CUBIC	QUARTIC
0.00000	0.00000	1.00000	0.00000
0.50000	0.00000	0.00000	0.00000
0.00000	0.00000	0.00000	0.00000
0.00000	0.00000	0.00000	0.00000

IDEF(IROW)

1

TABLE III. - Continued.

* INPUT BLADE ELEMENT DEFINITION OPTIONS *

INCIDENCE ANGLE	DEVIATION ANGLE	TURNING RATE RATIO	TRANSITION POINT	MAX. THICKNESS POINT	CHOKE MARGIN	BLADE MATERIAL DENSITY LB/(IN)**3
TABLE (S.S.REF.)	TABLE	TABLE	TABLE	TABLE (L.E.REF.)	NONE	0.00000

* TABLE OF BLADE SECTION DESIGN VARIABLES INPUT *

(VARIABLES CONTROLLED BY OTHER OPTIONS WILL APPEAR AS ZEROS IN THE TABLE.)

STREAMLINE NUMBER	SUCTION SURFACE INCIDENCE ANGLE (DEGREES)	DEVIATION ANGLE (DEGREES)	INLET/OUTLET TURNING RATE RATIO	TRANSITION/CHORD LOCATION	MAX. THICKNESS LOCATION/CHORD
1	0.4500	8.0000	0.0750	0.7000	0.6400
2	0.5100	6.8000	0.1800	0.6474	0.6300
3	0.4000	4.8000	0.4300	0.6042	0.6200
4	0.3700	4.5000	0.6600	0.5627	0.6100
5	0.3500	4.6000	0.7900	0.5193	0.6000
6	0.2600	5.7000	0.8300	0.4705	0.5800
7	0.2000	6.6300	0.8600	0.4180	0.5600
8	0.1700	7.5200	0.9600	0.3592	0.5400
9	0.0000	8.6400	0.9800	0.2862	0.5000
10	0.0000	10.3900	1.0000	0.2243	0.5000
11	0.0000	12.5200	1.0000	0.1629	0.5000

*** PRINTOUT OF INPUT STATION DATA ***

** INPUT SET NO. 9 IS AN ANNULAR STATION **

TIP AXIAL LOCATION (INCHES)	HUB AXIAL LOCATION (INCHES)	TIP BLOCKAGE FACTOR	HUB BLOCKAGE FACTOR	MASS BLEED FRACTION
3.0000	3.3000	0.0150	0.0150	0.0000

TABLE III. - Continued.

*** PRINTOUT OF INPUT STATION DATA ***

** INPUT SET NO. 10 IS A GUIDE VANE OR STATOR **

* FOR THIS BLADE ROW THE INPUT OPTION IS COORD. *

TIP C.G. AXIAL LOCATION (INCHES)	HUB C.G. AXIAL LOCATION (INCHES)	INLET TIP BLOCKAGE	INLET HUB BLOCKAGE	INLET MASS BLEED
5.2000	5.2000	0.0170	0.0170	0.0000
LOSS SET USED	**BLADE TILT ANGLE (DEGREES)**	**OUTLET TIP BLOCKAGE**	**OUTLET HUB BLOCKAGE**	**OUTLET MASS BLEED**
2	0.0000	0.0200	0.0200	0.0000
HUB D FACTOR LIMIT	**INLET HUB MACH LIMIT**	**TIP SOLIDITY**	**NUMBER OF BLADES**	
0.7000	1.0000	1.2800	34	

* POLYNOMIAL COEFS. FOR RADIAL PROFILES OF A BLADE AERO. PARAMETER AND BASIC BLADE ELEMENT GEOMETRY PARAMETERS *

COEF.	STATOR OUTLET V(0)	L.E. RADIUS/CHORD	T.E. RADIUS/CHORD	MAX. THICKNESS/CHORD	CHORD/TIP CHORD
INV.SQ.	0.00				
INVERSE	0.00				
CONSTANT	0.00	0.0130	0.0130	0.0800	
LINEAR	0.00	-0.0080	-0.0080	-0.0200	0.0000
QUADRATIC	0.00	0.0000	0.0000	0.0000	0.0000
CUBIC		0.0000	0.0000	0.0000	0.0000

* FUNCTION-OF-PASSAGE-HEIGHT-FROM-TIP POLYNOMIAL COEFFICIENTS FOR GREATER SPECIFICATION OF BLADE ELEMENT GEOMETRY *

RADIAL FUNCTION COEF.	POLY. COEF. FOR 1ST SEG. CENTERLINE ANGLE (FUNCTION OF PATH DIST. FROM TRANS. PT.)				POLY. COEF. FOR 2ND SEG. CENTERLINE ANGLE (FUNCTION OF PATH DIST. FROM TRANS. PT.)				ELLIPSE MAJOR/MINOR AXIS RATIO MINUS 1.0	
	LINEAR	QUADRATIC	CUBIC	QUARTIC	LINEAR	QUADRATIC	CUBIC	QUARTIC	LEAD.EDGE	TRAIL.EDGE
CONSTANT	1.00000	0.00000	0.00000	0.00000	-1.00000	0.00000	0.00000	0.00000	0.00000	0.00000
LINEAR	0.00000	0.00000	0.00000	0.00000	0.00000	0.00000	0.00000	0.00000	0.00000	0.00000
QUADRATIC	0.00000	0.00000	0.00000	0.00000	0.00000	0.00000	0.00000	0.00000	0.00000	0.00000
CUBIC	0.00000	0.00000	0.00000	0.00000	0.00000	0.00000	0.00000	0.00000	0.00000	0.00000

RADIAL FUNCTION COEF.	POLY. COEF. FOR 1ST SEGMENT THICKNESS (FUNCTION OF PATH DIST. FROM MAX.TH. PT.)				POLY. COEF. FOR.2ND SEGMENT THICKNESS (FUNCTION OF PATH DIST. FROM MAX.TH. PT.)				IDEF(IROW)
	SQ.ROOT	QUADRATIC	CUBIC	QUARTIC	SQ.ROOT	QUADRATIC	CUBIC	QUARTIC	
CONSTANT	0.00000	1.00000	0.00000	0.00000	0.00000	1.00000	0.00000	0.00000	4
LINEAR	0.00000	0.00000	0.00000	0.00000	0.00000	0.00000	0.00000	0.00000	
QUADRATIC	0.00000	0.00000	0.00000	0.00000	0.00000	0.00000	0.00000	0.00000	
CUBIC	0.00000	0.00000	0.00000	0.00000	0.00000	0.00000	0.00000	0.00000	

TABLE III. - Continued.

* INPUT BLADE ELEMENT DEFINITION OPTIONS *

INCIDENCE ANGLE	DEVIATION ANGLE	TURNING RATE RATIO	TRANSITION POINT	MAX. THICKNESS POINT	CHOKE MARGIN
TABLE (S.S.REF.)	TABLE	TABLE	S.S. SHOCK	TABLE (L.E.REF.)	NONE

* TABLE OF BLADE SECTION DESIGN VARIABLES INPUT *

(VARIABLES CONTROLLED BY OTHER OPTIONS WILL APPEAR AS ZEROS IN THE TABLE.)

STREAMLINE NUMBER	SUCTION SURFACE INCIDENCE ANGLE (DEGREES)	DEVIATION ANGLE (DEGREES)	INLET/OUTLET TURNING RATE RATIO	TRANSITION/CHORD LOCATION	MAX. THICKNESS LOCATION/CHORD
1	-3.0000	16.2000	1.0000	0.0000	0.5000
2	-3.0000	12.3000	1.0000	0.0000	0.5000
3	-3.0000	10.5000	1.0000	0.0000	0.5000
4	-3.0000	9.7000	1.0000	0.0000	0.5000
5	-3.0000	9.1000	1.0000	0.0000	0.5000
6	-3.0000	8.8000	1.0000	0.0000	0.5000
7	-3.0000	8.6000	1.0000	0.0000	0.5000
8	-3.0000	8.8000	1.0000	0.0000	0.5000
9	-3.0000	9.0000	1.0000	0.0000	0.5000
10	-3.0000	10.3000	1.0000	0.0000	0.5000
11	-3.0000	14.2000	1.0000	0.0000	0.5000

*** PRINTOUT OF INPUT STATION DATA ***

** INPUT SET NO. 11 IS AN ANNULAR STATION **

TIP AXIAL LOCATION (INCHES)	HUB AXIAL LOCATION (INCHES)	TIP BLOCKAGE FACTOR	HUB BLOCKAGE FACTOR	MASS BLEED FRACTION
7.3400	7.3400	0.0200	0.0200	0.0000

TABLE III. - Continued.

*** PRINTOUT OF INPUT STATION DATA ***

** INPUT SET NO. 12 IS ROTOR NO. 2 **

* FOR THIS BLADE ROW THE INPUT OPTION IS COORD. *

TIP C.G. AXIAL LOCATION (INCHES)	HUB C.G. AXIAL LOCATION (INCHES)	INLET TIP BLOCKAGE	INLET HUB BLOCKAGE	INLET MASS BLEED
5.2000	5.2000	0.0200	0.0200	0.0000
LOSS SET USED	**BLADE TILT ANGLE (DEGREES)**	**OUTLET TIP BLOCKAGE**	**OUTLET HUB BLOCKAGE**	**OUTLET MASS BLEED**
1	0.0000	0.0200	0.0200	0.0000
TIP D FACTOR LIMIT	**HUB FLOW ANGLE LIMIT (DEGREES)**	**TIP SOLIDITY**	**NUMBER OF BLADES**	**CUM ENERGY ADD FRACT**
0.4600	-20.0000	1.3000	38	1.0000

* POLYNOMIAL COEFS. FOR RADIAL PROFILES OF A BLADE AERO. PARAMETER AND BASIC BLADE ELEMENT GEOMETRY PARAMETERS *

COEF.	ROTOR OUTLET PRESSURE	L.E. RADIUS/CHORD	T.E. RADIUS/CHORD	MAX. THICKNESS/CHORD	CHORD/TIP CHORD
CONSTANT		0.0060	0.0060	0.0340	
LINEAR	0.0000	0.0090	0.0090	0.0000	0.0000
QUADRATIC	0.0000	0.0000	0.0000	0.1380	0.0000
CUBIC	0.0000	0.0000	0.0000	-0.0920	0.0000
QUARTIC	0.0000				
QUINTIC	0.0000				

* INPUT BLADE ELEMENT DEFINITION OPTIONS *

INCIDENCE ANGLE	DEVIATION ANGLE	TURNING RATE RATIO	TRANSITION POINT	MAX. THICKNESS POINT	CHOKE MARGIN	BLADE MATERIAL DENSITY LB/(IN)**3
SUCTION	TABLE	TABLE	S.S. SHOCK	TABLE (L.E.REF.)	NONE	0.16000

* TABLE OF BLADE SECTION DESIGN VARIABLES INPUT *

(VARIABLES CONTROLLED BY OTHER OPTIONS WILL APPEAR AS ZEROS IN THE TABLE.)

STREAMLINE NUMBER	INCIDENCE ANGLE (DEGREES)	DEVIATION ANGLE (DEGREES)	INLET/OUTLET TURNING RATE RATIO	TRANSITION/CHORD LOCATION	MAX. THICKNESS LOCATION/CHORD
1	0.0000	2.6000	0.6100	0.0000	0.5000
2	0.0000	2.7000	0.6630	0.0000	0.5000
3	0.0000	2.9300	0.7670	0.0000	0.5000
4	0.0000	3.2000	0.8860	0.0000	0.5000
5	0.0000	3.5300	0.9810	0.0000	0.5000
6	0.0000	4.0200	1.0000	0.0000	0.5000
7	0.0000	4.7000	1.0000	0.0000	0.5000
8	0.0000	5.5500	1.0000	0.0000	0.5000
9	0.0000	6.7000	1.0000	0.0000	0.5000
10	0.0000	8.5500	1.0000	0.0000	0.5000
11	0.0000	12.4000	1.0000	0.0000	0.5000

TABLE III. - Continued.

*** PRINTOUT OF INPUT STATION DATA ***

** INPUT SET NO. 13 IS AN ANNULAR STATION **

TIP AXIAL LOCATION (INCHES)	HUB AXIAL LOCATION (INCHES)	TIP BLOCKAGE FACTOR	HUB BLOCKAGE FACTOR	MASS BLEED FRACTION
11.0100	11.0100	0.0200	0.0200	0.0000

TABLE III. - Continued.

*** PRINTOUT OF INPUT STATION DATA ***

** INPUT SET NO. 14 IS A GUIDE VANE OR STATOR **

* FOR THIS BLADE ROW THE INPUT OPTION IS COORD. *

TIP C.G. AXIAL LOCATION (INCHES)	HUB C.G. AXIAL LOCATION (INCHES)	INLET TIP BLOCKAGE	INLET HUB BLOCKAGE	INLET MASS BLEED
12.7000	12.7000	0.0200	0.0200	0.0000

LOSS SET USED	BLADE TILT ANGLE (DEGREES)	OUTLET TIP BLOCKAGE	OUTLET HUB BLOCKAGE	OUTLET MASS BLEED
2	0.0000	0.0200	0.0200	0.0000

HUB D FACTOR LIMIT	INLET HUB MACH LIMIT	TIP SOLIDITY	NUMBER OF BLADES
0.7000	1.0000	1.2600	42

* POLYNOMIAL COEFS. FOR RADIAL PROFILES OF A BLADE AERO. PARAMETER AND BASIC BLADE ELEMENT GEOMETRY PARAMETERS *

COEF.	STATOR OUTLET V(0)	L.E. RADIUS/CHORD	T.E. RADIUS/CHORD	MAX. THICKNESS/CHORD	CHORD/TIP CHORD
INV.SQ.	0.00				
INVERSE	0.00				
CONSTANT	0.00	0.0140	0.0140	0.0800	
LINEAR	0.00	-0.0080	-0.0080	-0.0200	0.0000
QUADRATIC	0.00	0.0000	0.0000	0.0000	0.0000
CUBIC		0.0000	0.0000	0.0000	0.0000

* INPUT BLADE ELEMENT DEFINITION OPTIONS *

INCIDENCE ANGLE	DEVIATION ANGLE	TURNING RATE RATIO	TRANSITION POINT	MAX. THICKNESS POINT	CHOKE MARGIN
TABLE (S.S.REF.)	TABLE	TABLE	S.S. SHOCK	TABLE (L.E.REF.)	NONE

* TABLE OF BLADE SECTION DESIGN VARIABLES INPUT *

(VARIABLES CONTROLLED BY OTHER OPTIONS WILL APPEAR AS ZEROS IN THE TABLE.)

STREAMLINE NUMBER	SUCTION SURFACE INCIDENCE ANGLE (DEGREES)	DEVIATION ANGLE (DEGREES)	INLET/OUTLET TURNING RATE RATIO	TRANSITION/CHORD LOCATION	MAX. THICKNESS LOCATION/CHORD
1	-3.0000	15.6000	1.0000	0.0000	0.5000
2	-3.0000	12.8000	1.0000	0.0000	0.5000
3	-3.0000	10.9000	1.0000	0.0000	0.5000
4	-3.0000	9.9000	1.0000	0.0000	0.5000
5	-3.0000	9.4000	1.0000	0.0000	0.5000
6	-3.0000	9.2000	1.0000	0.0000	0.5000
7	-3.0000	9.1000	1.0000	0.0000	0.5000
8	-3.0000	9.3000	1.0000	0.0000	0.5000
9	-3.0000	9.6000	1.0000	0.0000	0.5000
10	-3.0000	11.1000	1.0000	0.0000	0.5000
11	-3.0000	16.0000	1.0000	0.0000	0.5000

TABLE III. - Continued.

*** PRINTOUT OF INPUT STATION DATA ***

** INPUT SET NO. 15 IS AN ANNULAR STATION **

TIP AXIAL LOCATION (INCHES)	HUB AXIAL LOCATION (INCHES)	TIP BLOCKAGE FACTOR	HUB BLOCKAGE FACTOR	MASS BLEED FRACTION
14.4400	14.4400	0.0200	0.0200	0.0000

** INPUT SET NO. 16 IS AN ANNULAR STATION **

TIP AXIAL LOCATION (INCHES)	HUB AXIAL LOCATION (INCHES)	TIP BLOCKAGE FACTOR	HUB BLOCKAGE FACTOR	MASS BLEED FRACTION
15.7000	16.0000	0.0200	0.0200	0.0000

** INPUT SET NO. 17 IS AN ANNULAR STATION **

TIP AXIAL LOCATION (INCHES)	HUB AXIAL LOCATION (INCHES)	TIP BLOCKAGE FACTOR	HUB BLOCKAGE FACTOR	MASS BLEED FRACTION
17.0000	17.6000	0.0200	0.0200	0.0000

** INPUT SET NO. 18 IS AN ANNULAR STATION **

TIP AXIAL LOCATION (INCHES)	HUB AXIAL LOCATION (INCHES)	TIP BLOCKAGE FACTOR	HUB BLOCKAGE FACTOR	MASS BLEED FRACTION
17.7500	18.6000	0.0200	0.0200	0.0000

** INPUT SET NO. 19 IS AN ANNULAR STATION **

TIP AXIAL LOCATION (INCHES)	HUB AXIAL LOCATION (INCHES)	TIP BLOCKAGE FACTOR	HUB BLOCKAGE FACTOR	MASS BLEED FRACTION
18.5000	19.6000	0.0200	0.0200	0.0000

TABLE III. - Continued.

*** PRINTOUT OF INPUT STATION DATA ***

** INPUT SET NO. 20 IS AN ANNULAR STATION **

TIP AXIAL LOCATION (INCHES)	HUB AXIAL LOCATION (INCHES)	TIP BLOCKAGE FACTOR	HUB BLOCKAGE FACTOR	MASS BLEED FRACTION
19.2500	20.6000	0.0200	0.0200	0.0000

** INPUT SET NO. 21 IS AN ANNULAR STATION **

TIP AXIAL LOCATION (INCHES)	HUB AXIAL LOCATION (INCHES)	TIP BLOCKAGE FACTOR	HUB BLOCKAGE FACTOR	MASS BLEED FRACTION
20.0000	21.5000	0.0200	0.0200	0.0000

TABLE III. - Continued.

(b) Printout during iterative computations

I	IFT	Z(IFT,JM)	AR	I	Z(I,J)	AR
1	1	-11.0000	0.0000	1	-11.0000	0.0000
2	2	-9.0000	3.2200	2	-9.0000	3.2200
3	3	-7.0000	3.2471	3	-7.0000	3.2471
4	4	-5.2000	3.6345	4	-5.2000	3.6345
5	5	-3.7000	4.3318	5	-3.7000	4.3318
6	6	-2.4158	5.0212	6	-2.4158	5.0212
7	7	-1.1942	5.1736	7	-1.1942	5.1736
8	8	-0.3063	6.8331	8	-0.3063	6.8331
9	9	2.3057	1.8868	9	2.3057	1.8868
10	10	3.1253	5.7521	10	3.1253	5.7521
11	11	4.3108	3.8447	11	4.3108	3.8447
12	12	6.2672	2.2286	12	6.2672	2.2286
13	13	7.3400	3.9852	13	7.3400	3.9852
14	14	8.5046	3.4793	14	8.5046	3.4793
15	15	9.9987	2.3827	15	9.9987	2.3827
16	16	11.0100	3.3566	16	11.0100	3.3566
17	17	12.0144	3.2929	17	12.0144	3.2929
18	18	13.5238	2.1517	18	13.5238	2.1517
19	19	14.4400	3.5090	19	14.4400	3.5090
20	20	15.8340	2.2665	20	15.8340	2.2665
21	21	17.2699	2.1006	21	17.2699	2.1006
22	22	18.1351	3.3244	22	18.1351	3.3244
23	23	19.0028	3.1234	23	19.0028	3.1234
24	24	19.8740	2.8541	24	19.8740	2.8541
25	25	20.7002	2.7756	25	20.7002	2.7756

FACT1 = 3.2592 FACT2 = 9.0369

TABLE III. - Continued.

ITER	CP	GAMMA	DHI	PSUM	DHCI	DHC	CPR	PR
1	0.23968	1.40064	0.000	0.000	35.3702	40.006	0.0000	2.4000

** VZ ARRAY **

STATION	STREAMLINE NUMBER 1	2	3	4	5	6	7	8	9	10	11
1	508.23	564.96	575.97	574.04	574.48	574.17	574.02	573.69	573.37	572.29	567.45
2	503.94	561.15	572.25	570.33	570.86	570.69	570.77	570.79	571.01	570.78	566.52
3	502.64	559.94	571.10	559.10	569.40	568.81	568.19	567.14	565.72	562.89	561.24
4	502.11	560.08	571.41	569.44	569.56	568.54	567.14	564.84	561.43	555.36	531.35
5	508.04	564.80	575.54	573.16	572.92	571.60	569.95	567.39	563.64	556.94	552.50
6	531.45	584.56	594.38	590.80	588.39	583.80	577.45	568.28	555.27	535.24	497.96
7	522.22	583.71	602.59	606.66	609.91	608.71	602.99	591.11	571.29	539.25	474.02
8	503.35	583.55	606.04	614.28	622.22	626.46	627.12	622.95	612.73	593.29	557.49
9	507.85	525.44	533.86	538.33	543.38	546.42	549.09	552.49	555.86	557.72	566.53
9	502.87	523.43	532.81	537.52	542.73	545.90	548.80	552.52	556.23	558.94	570.49
10	554.02	570.20	571.10	568.77	568.07	566.68	566.37	568.38	572.16	577.12	587.37
11	560.04	585.57	591.24	592.58	594.27	594.07	593.58	593.83	594.10	593.51	59[illegible].11
12	575.44	572.11	573.36	574.87	576.02	576.05	573.84	569.31	560.32	538.73	497.11
13	558.02	569.53	577.57	584.86	590.62	593.84	593.12	587.93	575.61	547.33	491.11
14	622.21	630.63	634.74	637.94	638.86	636.69	630.18	618.95	600.76	567.62	500.19
15	530.98	529.80	532.20	534.93	536.60	536.32	535.21	533.52	528.35	512.38	453.47
15	530.92	529.95	532.48	535.21	536.89	536.64	535.59	533.92	528.42	510.42	474.32
16	559.10	560.74	561.00	561.98	562.51	561.93	561.39	561.28	558.91	546.74	513.27
17	566.52	570.87	574.20	577.45	579.52	579.73	579.16	578.08	573.86	559.17	524.45
18	552.63	551.73	551.60	551.66	551.46	550.51	548.29	545.01	539.16	526.54	502.02
19	559.72	558.99	559.05	559.03	558.48	556.91	553.78	549.27	541.87	527.36	504.74
20	594.56	591.52	586.51	581.21	575.12	567.76	558.51	547.47	533.02	510.69	476.68
21	666.40	645.66	628.90	612.43	595.71	578.23	559.33	539.05	515.69	484.65	439.52
22	683.52	657.81	635.50	614.08	592.97	571.64	549.40	526.25	500.52	467.53	424.33
23	664.35	641.99	619.46	597.77	576.33	554.65	532.06	508.59	482.60	449.55	404.63
24	634.33	607.65	586.27	565.90	545.99	526.00	505.31	483.93	460.30	436.16	389.31
25	553.60	540.61	528.90	517.62	506.34	494.56	481.75	467.99	451.86	429.45	397.80

TABLE III. - Continued.

ITER	CP	GAMMA	SHI	RSUM	SHSI	SHS	SPR	PR
2	0.24117	1.41264	14.668	4991.951	35.3792	43.816	2.3633	2.4000

** JZ ARRAY **

STATION	STREAMLINE NUMBER 1	2	3	4	5	6	7	8	9	10	11
1	559.27	565.83	576.18	574.35	574.71	574.49	574.21	573.85	573.59	572.42	567.58
2	565.19	562.51	572.55	571.78	571.19	572.97	570.94	570.84	570.90	570.51	565.66
3	563.12	561.85	571.21	569.91	569.59	568.97	568.30	567.21	565.77	562.98	561.31
4	571.89	559.37	570.53	568.76	569.26	568.59	567.63	565.85	563.91	557.43	553.22
5	574.32	577.28	579.81	577.52	575.75	573.13	569.78	565.15	559.94	555.16	544.89
6	529.23	559.55	592.77	589.39	587.88	584.46	579.37	571.46	559.50	543.13	532.26
7	516.92	579.19	597.19	617.70	615.75	616.31	603.32	595.25	579.90	551.57	481.67
8	511.54	583.74	616.84	616.52	625.28	629.52	629.77	624.53	612.37	589.69	517.78
9	512.64	564.28	592.51	596.25	599.89	541.22	543.81	547.27	551.68	556.06	571.53
9	532.72	524.13	512.43	575.95	579.74	541.64	543.61	547.57	551.54	556.55	572.79
10	542.51	561.26	563.89	563.36	564.36	564.48	565.43	568.44	573.08	578.77	591.85
11	555.76	582.21	588.71	592.17	591.74	591.30	590.51	590.49	590.64	590.22	586.65
12	572.33	568.62	569.59	571.25	572.32	572.60	570.59	566.17	557.38	533.72	474.58
13	587.28	569.61	576.52	583.55	588.34	590.82	589.31	583.37	570.60	539.81	467.23
14	617.22	625.61	612.13	634.46	635.58	634.59	628.57	617.71	599.58	563.89	479.94
15	596.23	525.41	527.15	530.01	531.61	531.42	530.49	529.32	524.91	515.92	453.62
16	526.55	525.54	557.44	532.07	531.66	531.48	530.59	529.47	525.23	515.84	448.87
16	552.54	555.11	555.96	557.42	558.32	557.83	557.01	556.47	553.78	518.29	484.43
17	559.22	563.93	567.52	571.04	573.49	574.11	573.93	573.45	570.24	553.81	511.57
18	546.11	546.77	545.78	545.26	544.91	543.77	541.19	537.31	530.78	515.92	483.11
19	532.55	535.53	538.29	551.94	551.17	549.48	546.23	541.57	534.17	518.39	488.17
20	586.53	573.28	572.79	571.95	568.37	561.49	552.59	541.67	527.22	513.26	461.22
21	639.14	639.24	633.97	603.28	592.28	575.42	556.84	536.45	512.58	479.12	422.52
22	647.93	649.70	639.53	615.11	599.65	577.83	549.65	526.35	511.59	465.96	401.92
23	635.81	635.12	615.47	595.48	575.51	554.74	532.95	519.41	482.76	446.99	391.65
24	677.11	651.44	582.28	563.36	544.96	524.25	506.37	485.19	461.15	422.53	377.79
25	544.75	535.29	524.84	514.69	504.43	493.59	481.18	467.45	450.92	426.21	385.55

TABLE III. - Continued.

ITER	CP	GAMMA	DHI	PSUM	DHCI	DHC	CPR	PR
3	0.24126	1.40084	35.431	5075.211	35.3702	40.746	2.4032	2.4000

** VZ ARRAY **

STATION	STREAMLINE NUMBER 1	2	3	4	5	6	7	8	9	10	11
1	509.38	565.93	576.16	574.42	574.75	574.40	574.17	573.76	573.37	572.27	567.43
2	505.39	562.38	572.64	570.88	571.23	570.93	570.79	570.55	570.45	569.88	564.95
3	503.22	560.37	570.74	569.00	569.29	568.80	568.30	567.43	566.23	563.73	562.18
4	502.91	560.77	571.32	569.60	569.67	568.69	567.34	565.13	561.83	555.80	531.42
5	514.50	570.50	580.04	577.24	575.95	573.28	569.83	565.03	558.62	549.29	544.03
6	527.40	580.94	590.65	588.28	587.22	584.32	579.78	572.41	560.90	541.93	504.80
7	514.43	577.00	594.98	599.55	603.83	604.81	602.52	595.46	581.48	554.75	485.50
8	499.09	582.51	606.59	617.02	626.02	630.63	630.78	625.19	612.42	588.67	544.42
9	504.84	525.93	533.44	536.11	539.27	540.73	542.50	546.07	551.61	556.39	571.90
9	504.93	525.95	533.40	536.03	539.18	540.62	542.39	545.97	550.93	556.37	571.98
10	542.71	561.32	564.02	563.66	564.84	565.02	565.86	568.62	572.89	578.27	590.41
11	555.78	582.67	588.69	590.18	591.83	591.49	590.79	590.86	591.06	590.41	589.46
12	573.73	569.90	570.73	572.10	573.28	573.46	571.32	566.73	557.97	534.03	472.78
13	558.46	570.03	578.03	584.75	589.60	591.84	590.08	583.94	571.20	540.13	462.77
14	617.53	625.71	631.30	635.46	637.36	636.20	630.51	619.74	601.58	565.00	475.87
15	528.54	527.14	528.69	530.69	532.01	531.71	530.85	530.00	526.43	507.69	445.98
15	528.63	527.19	528.70	530.68	531.99	531.69	530.84	529.99	526.50	507.73	444.61
16	553.93	556.07	557.61	558.57	559.57	559.12	558.23	557.54	554.81	538.81	478.60
17	560.17	564.75	568.21	571.65	574.08	574.77	574.70	574.44	571.75	555.49	496.76
18	548.17	547.15	546.95	546.90	546.54	545.33	542.58	538.41	531.50	515.78	479.40
19	555.09	554.11	553.81	553.39	552.50	550.67	547.28	542.47	534.98	518.76	485.60
20	586.27	583.81	579.68	575.09	569.63	562.81	553.88	542.86	528.30	503.75	457.35
21	660.50	641.34	625.42	609.71	593.70	576.86	558.30	537.87	513.96	479.79	419.72
22	673.90	650.80	630.66	611.27	592.02	572.31	551.21	528.54	502.71	467.06	409.63
23	656.41	636.47	616.45	596.82	577.08	556.72	534.88	511.40	484.74	448.36	388.42
24	627.26	603.33	583.92	565.45	547.32	528.87	509.18	488.04	463.91	430.47	375.18
25	548.06	537.25	527.39	517.73	507.86	497.21	485.03	471.21	454.36	428.61	383.80

TABLE III. - Continued.

ITER	CP	GAMMA	DHI	PSUM	DHCI	DHC	CPR	PR
4	0.24126	1.40964	35.356	5066.184	35.3702	49.770	2.3989	2.4000

** VZ ARRAY **

STATION	STREAMLINE NUMBER 1	2	3	4	5	6	7	8	9	10	11
1	579.37	565.92	576.13	574.39	574.72	574.36	574.12	573.71	573.31	572.22	567.39
2	565.55	562.52	572.76	571.65	571.33	570.99	570.81	570.52	570.36	569.72	564.34
3	553.12	569.28	575.86	569.13	569.42	568.95	568.48	567.64	566.55	564.29	562.58
4	553.58	561.36	571.84	575.93	569.97	568.82	567.26	564.82	561.26	554.92	551.62
5	514.63	570.63	581.18	577.41	576.14	573.47	569.99	565.89	558.52	548.98	542.67
6	525.74	579.48	589.34	587.23	586.53	584.98	580.05	573.21	562.19	543.62	537.[illegible]
7	513.99	576.52	594.46	598.91	603.18	604.21	602.83	595.28	581.63	555.57	486.12
8	497.26	581.24	606.10	617.10	626.45	631.25	631.45	625.80	612.87	588.74	543.39
9	506.31	527.14	533.99	536.07	538.20	539.95	541.55	545.13	550.27	556.[illegible]	572.[illegible]
9	566.38	527.16	533.96	536.81	538.73	539.87	541.47	545.65	550.29	556.[illegible]	572.[illegible]
10	542.63	561.31	564.68	563.83	565.09	565.29	566.85	568.64	572.71	577.95	599.[illegible]
11	555.55	582.55	588.65	593.19	591.91	591.63	590.98	591.66	591.17	590.32	589.56
12	574.87	579.15	578.82	572.68	573.17	573.24	570.33	566.29	557.53	553.64	611.29
13	558.51	579.14	578.23	584.92	589.68	591.80	589.90	583.65	576.95	559.88	662.29
14	616.52	624.92	638.82	635.25	637.39	636.42	638.88	628.17	601.94	564.85	674.[illegible]
15	529.26	527.59	528.71	526.40	531.52	531.14	531.30	529.68	526.47	558.23	663.79
15	529.38	527.61	528.71	536.38	531.50	531.11	538.27	529.58	526.48	558.23	663.47
16	553.67	555.89	556.94	558.62	559.78	559.29	558.40	557.63	554.82	538.57	676.34
17	568.65	569.63	568.64	571.42	573.84	574.53	574.50	574.31	571.26	555.69	695.27
18	548.13	547.16	547.39	546.97	546.62	545.38	542.57	538.26	531.17	515.15	677.47
19	555.19	556.21	553.86	553.36	552.38	550.46	546.97	542.07	534.55	518.25	691.[illegible]
20	585.43	583.19	575.29	574.83	569.45	562.65	553.73	542.67	528.10	503.41	[illegible]
21	668.24	641.57	625.56	619.29	593.29	574.59	558.02	537.67	513.84	479.33	[illegible]
22	673.49	650.41	630.28	610.94	591.76	572.14	551.14	528.55	502.82	467.14	[illegible]
23	655.75	635.96	616.12	596.64	577.87	556.87	535.19	511.83	485.28	448.82	387.85
24	627.17	603.33	583.99	565.67	547.76	529.53	510.05	489.80	464.93	431.25	374.47
25	548.98	537.67	528.29	518.88	509.31	498.88	486.84	473.04	456.56	429.81	383.32

I	IFT	Z(IFT,JM)	AP
1	1	-11.9999	8.0000
2	2	-9.0000	3.2258
3	3	-7.0000	3.2471
4	4	-5.2000	3.6345
5	5	-3.7000	4.3328
6	6	-2.4142	5.6149
7	7	-1.1922	5.1721
8	8	-0.2287	6.3396
9	9	2.1103	2.1697
10	10	3.1236	4.6525
11	11	4.1324	4.5317
12	12	6.3434	1.9686
13	13	7.3400	4.2895
14	14	8.5619	3.3153
15	15	9.8518	2.7684
16	16	11.0100	2.9309
17	17	11.8746	3.8299
18	18	13.5828	1.8995
19	19	14.4409	3.7502
20	20	15.8299	2.2746
21	21	17.2597	2.1216
22	22	18.1948	3.3677
23	23	18.9625	3.1597
24	24	19.8284	2.8715
25	25	20.6687	2.7293

I	Z(I,J)	AP
1	-11.6888	8.0000
2	-9.0000	3.2200
3	-7.0000	3.2471
4	-5.2000	3.6345
5	-3.7000	4.3328
6	-2.4142	5.6149
7	-1.1922	5.1721
8	-0.2287	6.3396
9	2.1103	2.1697
10	3.1236	4.6525
11	4.1324	4.5317
12	6.3434	1.9686
13	7.3400	4.2895
14	8.5619	3.3153
15	9.8518	2.7684
16	11.0100	2.9309
17	11.8746	3.8299
18	13.5828	1.8995
19	14.4409	3.7502
20	15.8299	2.2746
21	17.2597	2.1216
22	18.1948	3.3677
23	18.9625	3.1597
24	19.8284	2.8715
25	20.6687	2.7293

FACT1 = 3.8546 FACT2 = 8.2177

TABLE III. - Continued.

ITER	CP	GAMMA	DHI	PSUM	DHCI	DHC	CPR	PR
5	0.24127	1.40064	35.372	5068.719	35.3702	40.767	2.4001	2.4000

** VZ ARRAY **

STATION	STREAMLINE NUMBER 1	2	3	4	5	6	7	8	9	10	11
1	509.36	565.91	576.13	574.39	574.72	574.37	574.13	573.72	573.33	572.26	567.44
2	505.64	562.60	572.85	571.08	571.40	571.06	570.86	570.55	570.34	569.67	564.70
3	503.18	560.34	570.69	568.94	569.22	568.72	568.23	567.36	566.22	563.85	562.31
4	504.14	561.81	572.26	570.39	570.22	568.94	567.23	564.60	560.85	554.33	529.80
5	514.41	570.58	580.22	577.53	576.36	573.79	570.41	565.56	558.99	549.42	543.52
6	525.76	578.82	588.64	586.60	586.07	583.84	580.07	573.49	562.66	544.13	510.47
7	509.98	575.59	593.76	598.54	603.03	604.27	602.31	595.79	582.87	557.79	472.29
8	519.19	594.35	616.84	626.76	634.35	636.96	634.39	625.36	608.18	578.39	531.48
9	479.95	510.10	518.99	522.76	527.75	531.95	537.56	546.32	558.58	572.08	591.32
9	477.85	509.34	518.71	522.71	527.88	532.20	537.98	547.03	559.75	573.88	593.70
10	544.36	562.72	565.59	565.62	566.90	567.36	568.96	573.11	579.89	588.06	602.79
11	555.64	581.61	588.09	590.04	591.91	592.04	592.36	594.08	596.93	599.19	601.39
12	579.49	575.94	576.47	577.61	578.61	578.55	576.10	571.18	562.33	538.88	476.73
13	562.15	574.73	583.02	589.76	594.51	596.51	594.41	587.89	574.98	544.11	466.07
14	627.80	636.31	642.12	646.18	647.81	646.19	639.81	628.00	608.39	569.71	476.80
15	523.00	524.28	526.10	528.37	530.31	531.05	531.67	533.08	533.72	521.08	466.07
15	521.77	523.36	525.32	527.66	529.65	530.44	531.13	532.67	533.60	521.98	471.21
16	558.78	561.21	562.53	564.38	565.72	565.72	565.35	565.50	564.84	552.70	498.81
17	564.15	569.34	572.97	576.48	579.09	580.18	580.70	581.54	581.22	569.55	519.67
18	557.40	556.48	556.33	556.28	555.88	554.52	551.47	546.84	539.25	522.72	485.18
19	564.36	563.40	562.98	562.35	561.24	559.13	555.38	550.15	542.26	525.83	492.25
20	594.20	592.25	588.46	583.99	578.52	571.55	562.34	550.91	535.88	510.90	463.77
21	670.89	651.43	635.02	618.90	602.60	585.50	566.68	545.92	521.60	486.96	425.97
22	684.27	660.86	640.36	620.69	601.22	581.27	559.88	536.84	510.59	474.57	416.39
23	665.85	645.84	625.79	606.06	586.26	565.79	543.77	519.94	492.93	456.06	395.15
24	637.49	613.34	593.67	575.11	557.04	538.64	518.91	497.53	472.90	438.66	381.69
25	556.91	546.82	537.47	528.23	518.70	508.23	496.01	481.87	464.36	437.52	390.59

TABLE III. - Continued.

ITER	CP	GAMMA	DHI	PSUM	DHCI	DHC	CPR	PR
6	0.24121	1.40064	34.798	5005.234	35.3702	41.438	2.3700	2.4000

** VZ ARRAY **

STATION	STREAMLINE NUMBER 1	2	3	4	5	6	7	8	9	10	11
1	509.34	565.89	576.12	574.38	574.72	574.37	574.14	573.74	573.37	572.31	567.50
2	505.70	562.65	572.90	571.13	571.46	571.11	570.91	570.58	570.36	569.66	564.68
3	503.31	560.44	570.77	568.98	569.22	568.68	568.13	567.22	566.03	563.65	562.11
4	504.29	561.92	572.36	570.45	570.24	568.89	567.10	564.38	560.52	553.86	529.23
5	514.16	570.39	580.06	577.42	576.32	573.83	570.51	565.70	559.12	549.56	543.69
6	525.15	578.26	588.13	586.20	585.83	583.81	580.26	573.91	563.24	544.67	511.13
7	509.46	575.19	593.38	598.23	602.81	604.15	602.28	595.83	583.04	558.40	479.29
8	516.36	592.28	615.78	626.11	634.00	636.80	634.48	625.81	609.20	580.01	531.90
9	477.15	508.46	517.75	521.90	527.03	531.20	536.78	545.53	557.82	571.71	591.07
9	477.22	508.46	517.72	521.88	526.99	531.14	536.71	545.43	557.68	571.54	590.96
10	540.25	559.80	563.14	563.46	564.93	565.50	567.24	571.53	578.43	586.92	602.49
11	552.19	579.21	586.07	588.16	590.02	590.17	590.45	592.07	594.73	596.84	599.58
12	575.91	572.32	572.73	573.81	574.78	574.68	572.14	567.09	558.04	534.03	470.09
13	558.50	571.10	579.46	586.17	590.84	592.70	590.39	583.60	570.34	538.81	459.05
14	622.24	630.74	636.72	640.96	642.84	641.49	635.39	623.84	604.30	565.09	470.36
15	517.70	519.32	521.37	523.79	525.69	526.28	526.74	528.03	528.53	515.82	462.15
15	517.80	519.41	521.44	523.85	525.75	526.32	526.77	528.04	528.49	515.62	461.24
16	552.47	555.51	557.26	559.45	560.96	561.02	560.69	560.81	559.86	546.50	489.66
17	558.44	564.15	568.04	571.70	574.29	575.22	575.57	576.15	575.51	562.54	509.83
18	550.89	549.97	549.79	549.74	549.39	548.08	545.05	540.39	532.74	515.88	477.79
19	558.26	557.26	556.72	555.99	554.80	552.59	548.71	543.30	535.21	518.43	484.23
20	587.05	585.10	581.42	577.01	571.63	564.70	555.50	544.07	528.99	503.82	456.31
21	662.99	643.63	627.21	611.15	595.01	578.11	559.48	538.91	514.72	480.04	418.86
22	675.99	652.75	632.39	612.90	593.68	573.99	552.82	529.99	503.91	467.93	409.56
23	657.51	637.73	617.92	598.44	578.94	558.77	537.02	513.51	486.64	449.79	388.72
24	630.03	606.09	586.56	568.25	550.49	532.43	512.99	491.85	467.36	433.00	375.63
25	550.48	540.75	531.67	522.69	513.43	503.20	491.14	477.10	459.56	432.40	384.76

TABLE III. - Continued.

ITER	CP	GAMMA	DHI	PSUM	DHCI	DHC	CPR	PR
7	0.24126	1.40064	35.416	5073.598	35.3702	41.385	2.4024	2.4000

** VZ ARRAY **

STATION	STREAMLINE NUMBER 1	2	3	4	5	6	7	8	9	10	11
1	509.32	565.88	576.10	574.37	574.71	574.36	574.14	573.75	573.38	572.35	567.55
2	505.74	562.69	572.93	571.16	571.48	571.13	570.92	570.58	570.34	569.61	564.62
3	503.45	560.57	570.88	569.07	569.27	568.70	568.10	567.13	565.89	563.51	561.96
4	504.46	562.07	572.49	570.56	570.32	568.92	567.08	564.29	560.36	553.61	528.90
5	513.93	570.18	579.89	577.30	576.26	573.85	570.60	565.84	559.27	549.71	543.85
6	524.95	578.07	587.95	586.09	585.82	583.93	580.51	574.29	563.70	545.07	511.58
7	508.54	574.41	592.68	597.64	602.39	603.93	602.28	596.06	583.55	559.33	480.61
8	514.30	591.07	615.18	625.79	633.79	636.61	634.32	625.77	609.43	580.49	531.54
9	478.54	509.02	518.04	522.10	527.16	531.28	536.76	545.33	557.41	571.19	590.67
9	478.61	509.01	518.01	522.05	527.12	531.24	536.71	545.28	557.35	571.11	590.60
10	540.70	560.11	563.41	563.72	565.17	565.69	567.32	571.47	578.24	586.69	602.55
11	552.45	579.35	586.14	588.21	590.11	590.20	590.46	592.03	594.57	596.50	559.31
12	576.32	572.71	573.10	574.18	575.15	575.02	572.45	567.37	558.33	534.29	469.37
13	558.56	571.28	579.83	586.65	591.38	593.26	590.96	584.16	570.91	539.29	458.47
14	622.13	630.70	636.89	641.32	643.35	642.14	636.19	624.78	605.30	565.77	469.52
15	519.03	520.31	522.13	524.42	526.23	526.75	527.14	528.37	528.87	516.15	460.98
15	519.07	520.32	522.12	524.40	526.21	526.74	527.13	528.35	528.85	516.12	460.68
16	553.09	556.07	557.81	560.00	561.52	561.59	561.25	561.35	560.38	546.88	488.83
17	559.33	564.94	568.74	572.32	574.85	575.74	576.02	576.53	575.87	562.85	509.10
18	551.33	550.48	550.42	550.46	550.15	548.85	545.82	541.13	533.37	516.26	477.24
19	558.91	557.96	557.48	556.78	555.57	553.31	549.34	543.84	535.62	518.61	483.56
20	587.37	585.58	582.10	577.80	572.44	565.48	556.24	544.74	529.56	504.16	455.72
21	663.58	644.25	627.82	611.78	595.67	578.80	560.20	539.65	515.43	480.51	418.31
22	676.54	653.36	633.07	613.65	594.48	574.82	553.68	530.83	504.71	468.52	409.19
23	657.87	638.20	618.55	599.20	579.77	559.67	537.98	514.48	487.57	450.49	388.42
24	630.64	606.76	587.30	569.10	551.47	533.52	514.18	493.09	468.54	433.88	375.39
25	550.98	541.53	532.72	523.95	514.85	504.72	492.73	478.69	461.03	433.50	384.70

TABLE III. - Continued.

ITER	CP	GAMMA	DHI	PSUM	DHCI	DHC	CPR	PR
8	0.24126	1.40064	35.357	5066.996	35.3702	41.400	2.3993	2.4000

** VZ ARRAY **

STATION	STREAMLINE NUMBER 1	2	3	4	5	6	7	8	9	10	11
1	509.30	565.85	576.09	574.36	574.70	574.36	574.14	573.76	573.40	572.39	567.59
2	505.76	562.71	572.96	571.19	571.50	571.15	570.93	570.58	570.33	569.58	564.58
3	503.61	560.70	570.98	569.14	569.31	568.70	568.05	567.03	565.74	563.34	561.77
4	504.59	562.18	572.60	570.66	570.41	568.99	567.12	564.31	560.34	553.52	528.76
5	513.74	570.04	579.77	577.22	576.22	573.86	570.65	565.91	559.31	549.71	543.85
6	524.34	577.52	587.43	585.65	585.49	583.74	580.48	574.43	563.99	545.39	511.95
7	507.83	573.82	592.16	597.22	602.11	603.80	602.31	596.24	583.89	559.93	481.53
8	512.74	590.18	614.78	625.62	633.69	636.50	634.21	625.73	609.61	580.86	531.36
9	479.42	509.31	518.13	522.11	527.14	531.22	536.64	545.11	557.05	570.74	590.25
9	479.47	509.30	518.11	522.09	527.11	531.20	536.63	545.09	557.02	570.71	590.21
10	540.76	560.14	563.45	563.77	565.19	565.65	567.18	571.21	577.87	586.28	602.38
11	552.59	579.44	586.23	588.28	590.17	590.25	590.49	592.01	594.46	596.25	599.12
12	576.39	572.74	573.07	574.13	575.10	574.96	572.37	567.29	558.30	534.36	459.29
13	558.21	571.02	579.71	586.62	591.39	593.31	591.03	584.26	571.06	539.50	458.47
14	621.68	630.29	636.62	641.15	643.28	642.16	636.32	625.03	605.62	565.92	469.03
15	519.32	520.36	522.02	524.22	525.99	526.49	526.85	528.06	528.61	516.02	460.31
15	519.41	520.43	522.09	524.29	526.05	526.55	526.92	528.12	528.67	516.08	460.30
16	553.01	556.00	557.76	559.96	561.48	561.53	561.16	561.24	560.25	546.66	488.12
17	559.32	564.91	568.69	572.24	574.74	575.60	575.85	576.32	575.65	562.62	508.48
18	551.20	550.37	550.34	550.40	550.12	548.82	545.80	541.12	533.39	516.21	476.92
19	558.93	557.99	557.51	556.80	555.57	553.28	549.28	543.74	535.50	518.49	483.23
20	587.05	585.37	582.00	577.75	572.40	565.43	556.17	544.66	529.48	504.06	455.38
21	663.42	644.07	627.59	611.54	595.45	578.64	560.12	539.65	515.50	480.59	418.13
22	676.32	653.15	632.87	613.49	594.37	574.77	553.68	530.90	504.84	468.68	409.12
23	657.46	637.85	618.29	599.02	579.68	559.66	538.05	514.64	487.80	450.73	388.40
24	630.52	606.65	587.20	569.08	551.56	533.75	514.53	493.54	469.05	434.33	375.44
25	550.85	541.59	532.95	524.33	515.36	505.35	493.45	479.46	461.80	434.14	384.85

TABLE III. - Continued.

ITER	CP	GAMMA	DHI	PSUM	DHCI	DHC	CPR	PR
9	0.24126	1.40064	35.373	5068.809	35.3702	41.397	2.4001	2.4000

** VZ ARRAY **

STATION	STREAMLINE NUMBER 1	2	3	4	5	6	7	8	9	10	11
1	509.28	565.84	576.08	574.34	574.68	574.35	574.13	573.75	573.41	572.41	567.62
2	505.79	562.73	572.97	571.20	571.51	571.14	570.92	570.56	570.29	569.52	564.51
3	503.74	560.80	571.06	569.20	569.35	568.70	568.02	566.95	565.63	563.21	561.64
4	504.67	562.28	572.70	570.76	570.49	569.05	567.15	564.31	560.31	553.44	528.62
5	513.58	569.87	579.64	577.12	576.17	573.87	570.71	566.00	559.40	549.78	543.94
6	524.12	577.34	587.26	585.54	585.49	583.85	580.72	574.81	564.49	545.91	512.35
7	507.31	573.30	591.71	596.87	601.88	603.70	602.34	596.39	584.17	560.39	482.86
8	510.83	589.49	614.51	625.50	633.61	636.40	634.11	625.73	609.95	581.65	531.46
9	479.35	509.27	518.02	521.93	526.95	531.07	536.54	545.04	556.86	570.19	589.45
9	479.31	509.24	517.98	521.89	526.91	531.05	536.51	545.01	556.82	570.13	589.36
10	541.04	560.29	563.48	563.72	565.07	565.42	566.84	570.78	577.34	585.64	601.62
11	552.84	579.57	586.26	588.23	590.07	590.11	590.31	591.81	594.18	595.75	598.64
12	576.36	572.68	572.97	574.02	574.98	574.84	572.24	567.15	558.21	534.39	469.29
13	557.76	570.64	579.48	586.48	591.31	593.26	591.01	584.26	571.11	539.60	458.68
14	620.89	629.49	635.93	640.52	642.67	641.58	635.80	624.58	605.27	565.60	468.79
15	519.79	520.58	522.08	524.19	525.89	526.35	526.70	527.94	528.66	516.38	460.72
15	519.90	520.65	522.14	524.24	525.94	526.40	526.75	527.99	528.73	516.48	460.90
16	553.17	556.03	557.75	559.91	561.36	561.34	560.91	560.99	560.13	546.71	488.09
17	559.58	565.01	568.69	572.17	574.60	575.39	575.58	576.04	575.49	562.68	508.58
18	551.12	550.32	550.33	550.41	550.14	548.85	545.83	541.14	533.37	516.13	476.73
19	558.94	558.02	557.56	556.85	555.62	553.31	549.29	543.71	535.44	518.43	483.13
20	586.80	585.21	581.94	577.75	572.40	565.43	556.15	544.61	529.42	504.00	455.27
21	663.29	643.93	627.40	611.35	595.29	578.53	560.07	539.66	515.55	480.65	418.13
22	676.10	652.95	632.70	613.37	594.31	574.76	553.72	530.98	504.95	468.84	409.25
23	657.10	637.55	618.08	598.87	579.60	559.65	538.12	514.76	487.97	450.91	388.53
24	630.40	606.54	587.10	569.05	551.63	533.93	514.83	493.91	469.46	434.71	375.65
25	550.72	541.62	533.12	524.63	515.78	505.87	494.05	480.10	462.43	434.69	385.14

TABLE III. - Continued.

ITER	CP	GAMMA	DHI	PSUM	DHCI	DHC	CPR	PR
10	0.24126	1.40064	35.373	5068.824	35.3702	41.393	2.4001	2.4000

** VZ ARRAY **

STATION	STREAMLINE NUMBER 1	2	3	4	5	6	7	8	9	10	11
1	509.27	565.83	576.06	574.33	574.67	574.33	574.12	573.75	573.41	572.42	567.65
2	505.82	562.76	573.00	571.22	571.53	571.16	570.92	570.55	570.27	569.48	564.46
3	503.87	560.91	571.16	569.28	569.41	568.73	568.01	566.91	565.54	563.11	561.53
4	504.72	562.32	572.74	570.80	570.52	569.07	567.16	564.30	560.27	553.36	528.51
5	513.42	569.74	579.53	577.05	576.14	573.89	570.78	566.10	559.49	549.85	544.00
6	523.60	576.86	586.80	585.14	585.17	583.65	580.64	574.86	564.67	546.14	512.60
7	506.84	572.91	591.38	596.61	601.72	603.64	602.38	596.52	584.40	560.75	483.42
8	509.93	588.98	614.37	625.50	633.62	636.37	634.06	625.71	610.05	581.84	531.45
9	479.80	509.37	517.98	521.86	526.88	531.01	536.46	544.91	556.65	569.93	589.19
9	479.83	509.36	517.97	521.84	526.86	531.00	536.45	544.89	556.64	569.91	589.16
10	541.25	560.47	563.66	563.88	565.20	565.49	566.83	570.67	577.12	585.36	601.44
11	552.99	579.69	586.36	588.32	590.15	590.19	590.38	591.85	594.16	595.62	598.51
12	576.38	572.66	572.92	573.97	574.93	574.78	572.18	567.09	558.18	534.48	469.49
13	557.43	570.39	579.35	586.41	591.28	593.26	591.02	584.29	571.16	539.70	458.86
14	620.66	629.31	635.85	640.50	642.70	641.66	635.94	624.81	605.55	565.79	468.77
15	520.18	520.78	522.15	524.21	525.88	526.32	526.66	527.89	528.64	516.53	461.09
15	520.24	520.83	522.20	524.24	525.92	526.36	526.69	527.92	528.68	516.58	461.18
16	553.26	556.12	557.83	559.97	561.41	561.37	560.91	560.97	560.10	546.67	488.11
17	559.71	565.12	568.78	572.24	574.66	575.43	575.59	576.03	575.46	562.69	508.69
18	551.10	550.33	550.35	550.45	550.18	548.88	545.86	541.16	533.40	516.10	476.63
19	558.98	558.07	557.62	556.91	555.67	553.35	549.31	543.70	535.41	518.40	483.09
20	586.62	585.11	581.93	577.77	572.43	565.45	556.15	544.59	529.39	503.96	455.20
21	663.21	64[illegible].83	627.26	611.20	595.17	578.45	560.05	539.69	515.63	480.73	418.18
22	675.96	652.81	632.58	613.28	594.25	574.74	553.75	531.04	505.05	468.96	409.37
23	656.81	637.31	617.91	598.76	579.54	559.65	538.18	514.89	488.14	451.09	388.68
24	630.31	606.45	587.01	569.01	551.68	534.08	515.07	494.23	469.81	435.03	375.86
25	550.60	541.64	533.26	524.87	516.11	506.28	494.53	480.62	462.96	435.16	385.42

TABLE III. - Continued.

(c) Program output

*** COMPUTED COMPRESSOR DESIGN PARAMETERS FOR A ROTATIONAL SPEED OF, 16042.8, RPM ***

** THE CORRECTED WEIGHTFLOW PER UNIT OF CASING ANNULAR AREA AT THE INLET FACE OF THE FIRST BLADE ROW IS 38.91 LBS/SEC/FT SQ **

** MASS AVERAGED ROTOR AND STAGE AERODYNAMIC PARAMETERS **

STAGE NO.	BLADE TYPE	FLOW COEF.	HEAD COEF.	ID. HEAD COEF.	PRESS. RATIO	TEMP. RATIO	ADIA. EFF.	POLY. EFF.	ASPECT RATIO	FOR. AX. THRUST (LBS)	GAS BENDING MOMENTS FOR. AX. (FT-LBS)	TANG. (FT-LBS)	TORQUE (FT-LBS)	POWER (HP)
1	ROTOR	0.4322	0.2384	0.2626	1.6358	1.1663	0.9080	0.9141	1.55	1050.19	17.800	-12.695	702.64	2146.25
1	STATOR	0.4188	0.2253	0.2626	1.5948	1.1663	0.8579	0.8669	2.05	-210.05	2.322	6.070		
2	ROTOR	0.4635	0.2670	0.2929	1.5340	1.1421	0.9114	0.9166	1.97	1140.55	6.790	-4.795	703.00	2147.35
2	STATOR	0.4270	0.2543	0.2929	1.5049	1.1421	0.8682	0.8756	1.95	-252.75	1.411	3.558		

** CUMULATIVE SUMS OF MASS AVERAGED ROTOR AND STAGE AERODYDAMIC PARAMETERS **

STAGE NO.	BLADE TYPE	WEIGHT FLOW (LBS/SEC)	TOTAL PRESS. (PSIA)	TOTAL TEMP. (DEG. R.)	PRESS. RATIO	TEMP. RATIO	HEAD COEF.	IDEAL HEAD COEF.	ADIA. EFF.	POLY. EFF.	FOR. AX. THRUST (LBS)	TORQUE (FT-LBS)	POWER (HP)	FRACT ENERGY
1	INLET	73.30	14.666	518.70										
1	ROTOR	73.30	23.990	604.94	1.6358	1.1663	0.2384	0.2626	0.9079	0.9141	1050.19	702.64	2146.25	0.4999
1	STATOR	73.30	23.389	604.94	1.5948	1.1663	0.2253	0.2626	0.8579	0.8669	840.14			
2	ROTOR	73.30	35.879	690.90	2.4464	1.3320	0.4599	0.5254	0.8755	0.8900	1840.41	1405.64	4293.59	1.0000
2	STATOR	73.30	35.198	690.90	2.4000	1.3320	0.4488	0.5254	0.8543	0.8710	1587.65			

** VALUES OF PARAMETERS ON STREAMLINES AT STATION, 1, WHICH IS AN ANNULUS **

STREAMLINE NO.	RADIUS (IN.)	AXIAL COORD. (IN.)	AXIAL VEL. (FT/SEC)	MERD. VEL. (FT/SEC)	TANG. VEL. (FT/SEC)	ABS. VEL. (FT/SEC)	ABS. MACH NO.	ABS.FLOW ANGLE (DEG)	STREAM. SLOPE (DEG)	STREAM. CURV. (1./IN.)	TOTAL PRESS. (PSIA)	TOTAL TEMP. (DEG.R.)	STATIC PRESS. (PSIA)	STATIC TEMP. (DEG.R.)
TIP	10.099	-11.000												
1	10.099	-11.000	509.27	509.27	0.00	509.27	0.4658	0.00	-0.13	0.000	14.125	518.70	12.184	497.22
2	9.628	-11.000	565.83	565.83	0.00	565.83	0.5202	0.00	-0.21	0.000	14.670	518.70	12.197	492.01
3	9.162	-11.000	576.06	576.07	0.00	576.07	0.5301	0.00	-0.28	0.000	14.700	518.70	12.138	491.04
4	8.671	-11.000	574.33	574.34	0.00	574.34	0.5285	0.00	-0.36	0.000	14.700	518.70	12.152	491.20
5	8.151	-11.000	574.67	574.69	0.00	574.69	0.5288	0.00	-0.46	0.000	14.700	518.70	12.149	491.17
6	7.594	-11.000	574.33	574.36	0.00	574.36	0.5285	0.00	-0.56	0.001	14.700	518.70	12.152	491.20
7	6.994	-11.000	574.12	574.16	0.00	574.16	0.5283	0.00	-0.69	0.001	14.700	518.70	12.154	491.22
8	6.336	-11.000	573.75	573.81	0.00	573.81	0.5280	0.00	-0.84	0.001	14.700	518.70	12.156	491.26
9	5.602	-11.000	573.41	573.50	0.00	573.50	0.5277	0.00	-1.03	0.001	14.700	518.70	12.159	491.28
10	4.755	-11.000	572.42	572.57	0.00	572.57	0.5267	0.00	-1.29	0.001	14.700	518.70	12.167	491.37
11	3.714	-11.000	567.65	567.94	0.00	567.94	0.5223	0.00	-1.84	0.002	14.660	518.70	12.172	491.81
HUB	3.714	-11.000												

TABLE III. - Continued.

** VALUES OF PARAMETERS ON STREAMLINES AT STATION, 2, WHICH IS AN ANNULUS **

STREAMLINE NO.	RADIUS (IN.)	AXIAL COORD. (IN.)	AXIAL VEL. (FT/SEC)	MERD. VEL. (FT/SEC)	TANG. VEL. (FT/SEC)	ABS. VEL. (FT/SEC)	ABS. MACH NO.	ABS.FLOW ANGLE (DEG)	STREAM. SLOPE (DEG)	STREAM. CURV. (1./IN.)	TOTAL PRESS. (PSIA)	TOTAL TEMP. (DEG.R.)	STATIC PRESS. (PSIA)	STATIC TEMP. (DEG.R.)
TIP	10.099	-9.000												
1	10.095	-9.000	505.82	505.82	0.00	505.82	0.4625	0.00	-0.12	0.000	14.125	518.70	12.197	497.37
2	9.621	-9.000	562.76	562.76	0.00	562.76	0.5172	0.00	-0.18	0.000	14.670	518.70	12.222	492.30
3	9.153	-9.000	573.00	573.01	0.00	573.01	0.5272	0.00	-0.23	0.000	14.700	518.70	12.163	491.33
4	8.660	-9.000	571.22	571.23	0.00	571.23	0.5254	0.00	-0.30	0.001	14.700	518.70	12.178	491.50
5	8.136	-9.000	571.53	571.54	0.00	571.54	0.5258	0.00	-0.37	0.001	14.700	518.70	12.175	491.47
6	7.577	-9.000	571.16	571.18	0.00	571.18	0.5254	0.00	-0.46	0.001	14.700	518.70	12.178	491.51
7	6.972	-9.000	570.92	570.95	0.00	570.95	0.5252	0.00	-0.57	0.001	14.700	518.70	12.180	491.53
8	6.310	-9.000	570.55	570.59	0.00	570.59	0.5248	0.00	-0.70	0.001	14.700	518.70	12.183	491.56
9	5.568	-9.000	570.27	570.33	0.00	570.33	0.5246	0.00	-0.89	0.001	14.700	518.70	12.185	491.59
10	4.712	-9.000	569.48	569.60	0.00	569.60	0.5239	0.00	-1.18	0.000	14.700	518.70	12.191	491.66
11	3.655	-9.000	564.46	564.67	0.00	564.67	0.5191	0.00	-1.54	0.003	14.660	518.70	12.198	492.12
HUB	3.643	-9.000												

** VALUES OF PARAMETERS ON STREAMLINES AT STATION, 3, WHICH IS AN ANNULUS **

STREAMLINE NO.	RADIUS (IN.)	AXIAL COORD. (IN.)	AXIAL VEL. (FT/SEC)	MERD. VEL. (FT/SEC)	TANG. VEL. (FT/SEC)	ABS. VEL. (FT/SEC)	ABS. MACH NO.	ABS.FLOW ANGLE (DEG)	STREAM. SLOPE (DEG)	STREAM. CURV. (1./IN.)	TOTAL PRESS. (PSIA)	TOTAL TEMP. (DEG.R.)	STATIC PRESS. (PSIA)	STATIC TEMP. (DEG.R.)
TIP	10.100	-7.000												
1	10.091	-7.000	503.87	503.87	0.00	503.87	0.4607	0.00	-0.07	0.001	14.125	518.70	12.211	497.53
2	9.616	-7.000	560.91	560.91	0.00	560.91	0.5155	0.00	-0.11	0.000	14.670	518.70	12.237	492.48
3	9.146	-7.000	571.16	571.16	0.00	571.16	0.5254	0.00	-0.14	0.001	14.700	518.70	12.178	491.51
4	8.652	-7.000	569.28	569.29	0.00	569.29	0.5236	0.00	-0.17	0.001	14.700	518.70	12.194	491.69
5	8.127	-7.000	569.41	569.41	0.00	569.41	0.5237	0.00	-0.21	0.001	14.700	518.70	12.193	491.67
6	7.565	-7.000	568.73	568.74	0.00	568.74	0.5230	0.00	-0.26	0.002	14.700	518.70	12.198	491.74
7	6.957	-7.000	568.01	568.02	0.00	568.02	0.5223	0.00	-0.33	0.002	14.700	518.70	12.204	491.81
8	6.290	-7.000	566.91	566.92	0.00	566.92	0.5213	0.00	-0.44	0.003	14.700	518.70	12.213	491.91
9	5.542	-7.000	565.54	565.58	0.00	565.58	0.5200	0.00	-0.64	0.004	14.700	518.70	12.224	492.04
10	4.674	-7.000	563.11	563.20	0.00	563.20	0.5177	0.00	-1.00	0.004	14.700	518.70	12.244	492.26
11	3.597	-7.000	561.53	561.91	0.00	561.91	0.5164	0.00	-2.10	-0.013	14.660	518.70	12.221	492.38
HUB	3.572	-7.000												

** VALUES OF PARAMETERS ON STREAMLINES AT STATION, 4, WHICH IS AN ANNULUS **

STREAMLINE NO.	RADIUS (IN.)	AXIAL COORD. (IN.)	AXIAL VEL. (FT/SEC)	MERD. VEL. (FT/SEC)	TANG. VEL. (FT/SEC)	ABS. VEL. (FT/SEC)	ABS. MACH NO.	ABS.FLOW ANGLE (DEG)	STREAM. SLOPE (DEG)	STREAM. CURV. (1./IN.)	TOTAL PRESS. (PSIA)	TOTAL TEMP. (DEG.R.)	STATIC PRESS. (PSIA)	STATIC TEMP. (DEG.R.)
TIP	10.101	-5.200												
1	10.088	-5.200	504.72	504.72	0.00	504.72	0.4615	0.00	-0.21	-0.003	14.125	518.70	12.205	497.46
2	9.613	-5.200	562.32	562.32	0.00	562.32	0.5168	0.00	-0.12	-0.001	14.670	518.70	12.226	492.34
3	9.144	-5.200	572.74	572.74	0.00	572.74	0.5269	0.00	-0.04	0.000	14.700	518.70	12.165	491.36
4	8.651	-5.200	570.80	570.80	0.00	570.80	0.5250	0.00	0.05	0.002	14.700	518.70	12.181	491.54
5	8.126	-5.200	570.52	570.52	0.00	570.52	0.5248	0.00	0.13	0.003	14.700	518.70	12.184	491.57
6	7.565	-5.200	569.07	569.08	0.00	569.08	0.5234	0.00	0.21	0.005	14.700	518.70	12.195	491.71
7	6.957	-5.200	567.16	567.17	0.00	567.17	0.5215	0.00	0.27	0.007	14.700	518.70	12.211	491.89
8	6.288	-5.200	564.30	564.31	0.00	564.31	0.5187	0.00	0.29	0.008	14.700	518.70	12.235	492.16
9	5.536	-5.200	560.27	560.28	0.00	560.28	0.5148	0.00	0.26	0.011	14.700	518.70	12.267	492.53
10	4.658	-5.200	553.36	553.36	0.00	553.36	0.5082	0.00	0.12	0.015	14.700	518.70	12.323	493.18
11	3.546	-5.200	528.51	528.51	0.00	528.51	0.4842	0.00	-0.01	0.054	14.660	518.70	12.486	495.42
HUB	3.507	-5.200												

TABLE III. - Continued.

** VALUES OF PARAMETERS ON STREAMLINES AT STATION, 5, WHICH IS AN ANNULUS **

STREAMLINE NO.	RADIUS (IN.)	AXIAL COORD. (IN.)	AXIAL VEL. (FT/SEC)	MERD. VEL. (FT/SEC)	TANG. VEL. (FT/SEC)	ABS. VEL. (FT/SEC)	ABS. MACH NO.	ABS.FLOW ANGLE (DEG)	STREAM. SLOPE (DEG)	STREAM. CURV. (1./IN.)	TOTAL PRESS. (PSIA)	TOTAL TEMP. (DEG.R.)	STATIC PRESS. (PSIA)	STATIC TEMP. (DEG.R.)
TIP	10.101	-3.700												
1	10.079	-3.700	513.42	513.44	0.00	513.44	0.4698	0.00	-0.47	-0.003	14.125	518.70	12.142	496.73
2	9.609	-3.700	569.74	569.74	0.00	569.74	0.5240	0.00	-0.17	0.001	14.670	518.70	12.165	491.64
3	9.144	-3.700	579.53	579.53	0.00	579.53	0.5335	0.00	0.05	0.002	14.700	518.70	12.109	490.70
4	8.655	-3.700	577.05	577.05	0.00	577.05	0.5311	0.00	0.27	0.004	14.700	518.70	12.130	490.94
5	8.154	-3.700	576.14	576.17	0.00	576.17	0.5302	0.00	0.51	0.005	14.700	518.70	12.137	491.03
6	7.577	-3.700	573.89	573.94	0.00	573.94	0.5281	0.00	0.76	0.007	14.700	518.70	12.155	491.24
7	6.974	-3.700	570.78	570.88	0.00	570.88	0.5251	0.00	1.05	0.010	14.700	518.70	12.181	491.53
8	6.309	-3.700	566.10	566.26	0.00	566.26	0.5206	0.00	1.35	0.014	14.700	518.70	12.219	491.97
9	5.560	-3.700	559.49	559.72	0.00	559.72	0.5143	0.00	1.64	0.018	14.700	518.70	12.272	492.59
10	4.683	-3.700	549.85	550.12	0.00	550.12	0.5050	0.00	1.79	0.020	14.700	518.70	12.349	493.48
11	3.581	-3.700	544.00	544.25	0.00	544.25	0.4994	0.00	1.74	-0.013	14.660	518.70	12.363	494.01
HUB	3.518	-3.700												

** VALUES OF PARAMETERS ON STREAMLINES AT STATION, 6, WHICH IS AN ANNULUS **

STREAMLINE NO.	RADIUS (IN.)	AXIAL COORD. (IN.)	AXIAL VEL. (FT/SEC)	MERD. VEL. (FT/SEC)	TANG. VEL. (FT/SEC)	ABS. VEL. (FT/SEC)	ABS. MACH NO.	ABS.FLOW ANGLE (DEG)	STREAM. SLOPE (DEG)	STREAM. CURV. (1./IN.)	TOTAL PRESS. (PSIA)	TOTAL TEMP. (DEG.R.)	STATIC PRESS. (PSIA)	STATIC TEMP. (DEG.R.)
TIP	10.099	-2.300												
1	10.070	-2.301	523.60	523.60	0.00	523.60	0.4795	0.00	-0.04	0.013	14.125	518.70	12.067	495.85
2	9.606	-2.323	576.86	576.86	0.00	576.86	0.5309	0.00	-0.06	0.001	14.670	518.70	12.106	490.96
3	9.144	-2.344	586.80	586.80	0.00	586.80	0.5406	0.00	0.02	-0.000	14.700	518.70	12.048	490.00
4	8.660	-2.366	585.14	585.14	0.00	585.14	0.5390	0.00	0.21	-0.000	14.700	518.70	12.062	490.16
5	8.145	-2.389	585.17	585.20	0.00	585.20	0.5390	0.00	0.52	0.002	14.700	518.70	12.062	490.15
6	7.595	-2.415	583.65	583.73	0.00	583.73	0.5376	0.00	0.95	0.005	14.700	518.70	12.074	490.30
7	7.000	-2.442	580.64	580.84	0.00	580.84	0.5348	0.00	1.51	0.010	14.700	518.70	12.098	490.58
8	6.346	-2.472	574.86	575.28	0.00	575.28	0.5294	0.00	2.19	0.017	14.700	518.70	12.144	491.11
9	5.607	-2.505	564.67	565.45	0.00	565.45	0.5198	0.00	3.01	0.027	14.730	518.70	12.225	492.05
10	4.738	-2.545	546.14	547.41	0.00	547.41	0.5024	0.00	3.90	0.044	14.700	518.70	12.371	493.72
11	3.622	-2.596	512.60	513.44	0.00	513.44	0.4698	0.00	3.28	0.062	14.660	518.70	12.602	496.73
HUB	3.540	-2.600												

** VALUES OF PARAMETERS ON STREAMLINES AT STATION, 7, WHICH IS AN ANNULUS **

STREAMLINE NO.	RADIUS (IN.)	AXIAL COORD. (IN.)	AXIAL VEL. (FT/SEC)	MERD. VEL. (FT/SEC)	TANG. VEL. (FT/SEC)	ABS. VEL. (FT/SEC)	ABS. MACH NO.	ABS.FLOW ANGLE (DEG)	STREAM. SLOPE (DEG)	STREAM. CURV. (1./IN.)	TOTAL PRESS. (PSIA)	TOTAL TEMP. (DEG.R.)	STATIC PRESS. (PSIA)	STATIC TEMP. (DEG.R.)
TIP	10.100	-1.000												
1	10.055	-1.003	506.84	506.92	0.00	506.92	0.4636	0.00	-1.04	-0.040	14.125	518.70	12.189	497.28
2	9.595	-1.039	572.91	573.04	0.00	573.04	0.5272	0.00	-1.20	-0.036	14.670	518.70	12.138	491.33
3	9.134	-1.075	591.38	591.48	0.00	591.48	0.5452	0.00	-1.04	-0.028	14.700	518.70	12.009	489.54
4	8.654	-1.112	596.61	596.65	0.00	596.65	0.5502	0.00	-0.70	-0.021	14.700	518.70	11.965	489.03
5	8.148	-1.151	601.72	601.72	0.00	601.72	0.5552	0.00	-0.13	-0.013	14.700	518.70	11.922	488.52
6	7.611	-1.193	603.64	603.68	0.00	603.68	0.5571	0.00	0.65	-0.005	14.700	518.70	11.905	488.32
7	7.032	-1.238	602.38	602.63	0.00	602.63	0.5561	0.00	1.65	0.004	14.700	518.70	11.914	488.43
8	6.398	-1.287	596.52	597.29	0.00	597.29	0.5508	0.00	2.90	0.014	14.700	518.70	11.959	488.96
9	5.684	-1.342	584.40	586.18	0.00	586.18	0.5400	0.00	4.47	0.027	14.700	518.70	12.053	490.06
10	4.844	-1.407	560.75	564.50	0.00	564.50	0.5189	0.00	6.61	0.046	14.700	518.70	12.233	492.14
11	3.745	-1.492	483.42	491.76	0.00	491.76	0.4492	0.00	10.57	0.164	14.660	518.70	12.763	498.54
HUB	3.646	-1.500												

TABLE III. - Continued.

** VALUES OF PARAMETERS ON STREAMLINES AT STATION, 8, WHICH IS THE INLET OF ROTOR NUMBER, 1 **

STREAMLINE NO.	RADIUS (IN.)	AXIAL COORD. (IN.)	AXIAL VEL. (FT/SEC)	MERD. VEL. (FT/SEC)	TANG. VEL. (FT/SEC)	ABS. VEL. (FT/SEC)	ABS. MACH NO.	ABS.FLOW ANGLE (DEG)	STREAM. SLOPE (DEG)	STREAM. CURV. (1./IN.)	TOTAL PRESS. (PSIA)	TOTAL TEMP. (DEG.R.)	STATIC PRESS. (PSIA)	STATIC TEMP. (DEG.R.)
TIP	10.032	0.211												
1	9.989	0.197	509.93	514.19	0.00	514.19	0.4705	0.00	-7.38	-0.142	14.125	518.70	12.136	496.66
2	9.535	0.058	588.98	591.34	0.00	591.34	0.5450	0.00	-5.11	-0.071	14.670	518.70	11.985	489.55
3	9.087	-0.009	614.37	615.82	0.00	615.82	0.5690	0.00	-3.94	-0.054	14.700	518.70	11.800	487.09
4	8.621	-0.072	625.50	626.21	0.00	626.21	0.5793	0.00	-2.73	-0.038	14.700	518.70	11.709	486.01
5	8.133	-0.145	633.62	633.82	0.00	633.82	0.5868	0.00	-1.42	-0.025	14.700	518.70	11.642	485.21
6	7.615	-0.228	636.37	636.37	0.00	636.37	0.5893	0.00	-0.01	-0.012	14.700	518.70	11.619	484.94
7	7.057	-0.323	634.06	634.28	0.00	634.28	0.5872	0.00	1.54	-0.001	14.700	518.70	11.638	485.16
8	6.444	-0.434	625.71	626.76	0.00	626.76	0.5798	0.00	3.33	0.009	14.700	518.70	11.704	485.95
9	5.752	-0.558	610.05	612.83	0.00	612.83	0.5661	0.00	5.46	0.021	14.700	518.70	11.826	487.39
10	4.934	-0.721	581.84	587.96	0.00	587.96	0.5417	0.00	8.28	0.034	14.700	518.70	12.038	489.88
11	3.883	-0.881	531.45	547.76	0.00	547.76	0.5027	0.00	14.02	0.031	14.660	518.70	12.335	493.69
HUB	3.762	-0.899												

STREAMLINE NO.	R/RTIP	REL.FLOW ANGLE (DEG)	REL. TANG.VEL. (FT/SEC)	REL. VEL. (FT/SEC)	REL.MACH NUMBER	WHEEL SPEED (FT/SEC)	FLOW COEF.	L.E.RAD. /CHORD	MAX.TH. /CHORD	MAX.TH. PT.LOC. /CHORD	TRAN.PT. LOCATION /CHORD	SEGMENT IN/OUT TURN.RATE	LAYOUT CONE ANG. (DEG)
TIP	1.0000					1404.64							
1	0.9956	69.81	1398.41	1489.95	1.3634	1398.41	0.3630	0.0018	0.0290	0.6400	0.7000	0.0750	-10.16
2	0.9504	66.11	1334.85	1459.96	1.3456	1334.85	0.4193	0.0019	0.0300	0.6300	0.6474	0.1800	-7.41
3	0.9057	64.17	1272.12	1413.34	1.3059	1272.12	0.4374	0.0020	0.0324	0.6200	0.6042	0.4300	-5.56
4	0.8593	62.58	1206.96	1359.74	1.2578	1206.96	0.4453	0.0022	0.0362	0.6100	0.5627	0.6600	-3.77
5	0.8107	60.90	1138.65	1303.17	1.2064	1138.65	0.4511	0.0025	0.0412	0.6000	0.5193	0.7900	-2.03
6	0.7591	59.17	1066.16	1241.64	1.1498	1066.16	0.4531	0.0028	0.0473	0.5800	0.4705	0.8300	-0.28
7	0.7035	57.30	988.04	1174.11	1.0870	988.04	0.4514	0.0032	0.0543	0.5600	0.4180	0.8600	1.52
8	0.6423	55.21	902.20	1098.55	1.0162	902.20	0.4455	0.0036	0.0621	0.5400	0.3592	0.9600	3.52
9	0.5733	52.73	805.26	1011.93	0.9347	805.26	0.4343	0.0041	0.0701	0.5000	0.2862	0.9800	5.90
10	0.4918	49.60	690.76	907.11	0.8358	690.76	0.4142	0.0045	0.0772	0.5000	0.2243	1.0000	9.01
11	0.3870	44.78	543.59	771.70	0.7083	543.59	0.3784	0.0048	0.0802	0.5000	0.1629	1.0000	13.85
HUB	0.3749												

STREAMLINE NO.	PCT. PASS.	--- INLET STREAMLINE --- INC. ANGLE (DEG)	S.S.INC. ANGLE (DEG)	IN.BLADE ANGLE (DEG)	IN.BLADE ANGLE (DEG)	TRAN.PT. BL.ANGLE (DEG)	BLD.SET ANGLE (DEG)	++++ LAYOUT CONE ++++ 1ST SEG. S.S.CAM. (DEG)	MACH NO. AT SHOCK LOCATION	SH.LOC. AS FRACT OF S.S.	COV.CHAN. AS FRACT OF S.S.	MIN.CHK. AREA MARGIN	MIN.CHK. PT.LOC.IN COV.CHAN.	L.E.EDGE CIR.CENT R*D0/DR
1	0.70	2.52	0.45	67.29	67.48	62.32	64.06	7.41	1.4940	0.6971	0.3029	0.0560	0.1528	-0.8285
2	7.94	2.67	0.51	63.44	63.50	59.85	60.60	5.83	1.4534	0.6463	0.3537	0.0378	0.3875	-0.3600
3	15.08	2.78	0.40	61.39	61.39	58.56	58.83	5.15	1.4034	0.6063	0.3937	0.0246	0.4800	-0.1543
4	22.51	3.10	0.37	59.48	59.49	56.72	56.69	5.29	1.3588	0.5644	0.4356	0.0155	0.4900	-0.1357
5	30.29	3.54	0.35	57.36	57.38	54.42	54.03	5.72	1.3173	0.5192	0.4808	0.0106	0.4730	-0.1506
6	38.54	4.10	0.26	55.07	55.09	51.51	50.53	6.68	1.2810	0.4698	0.5302	0.0130	0.4113	-0.1655
7	47.44	4.82	0.20	52.48	52.49	48.22	46.31	7.71	1.2442	0.4166	0.5834	0.0163	0.3547	-0.1823
8	57.22	5.70	0.17	49.51	49.49	44.40	40.97	8.75	1.2102	0.3589	0.6411	0.0211	0.2895	-0.2110
9	68.26	6.79	0.00	45.93	45.86	40.02	33.88	9.69	1.1408	0.2946	0.7054	0.0288	0.2632	-0.2487
10	81.31	7.53	-0.00	42.07	41.90	34.72	24.34	10.53	1.0300	0.2273	0.7727	0.0400	0.2715	-0.2864
11	98.07	7.88	0.00	36.90	36.96	28.28	11.35	11.29	0.8670	0.1531	0.7834	0.0773	0.3076	-0.3000

TABLE III. - Continued.

** VALUES OF PARAMETERS ON STREAMLINES AT STATION, 9, WHICH IS THE OUTLET OF ROTOR NUMBER, 1 **

STREAMLINE NO.	RADIUS (IN.)	AXIAL COORD. (IN.)	AXIAL VEL. (FT/SEC)	MERD. VEL. (FT/SEC)	TANG. VEL. (FT/SEC)	ABS. VEL. (FT/SEC)	ABS. MACH NO.	ABS.FLOW ANGLE (DEG)	STREAM. SLOPE (DEG)	STREAM. CURV. (1./IN.)	TOTAL PRESS. (PSIA)	TOTAL TEMP. (DEG.R.)	STATIC PRESS. (PSIA)	STATIC TEMP. (DEG.R.)
TIP	9.756	1.773												
1	9.705	1.782	479.83	486.13	454.48	665.49	0.5616	43.07	-9.23	0.101	23.990	621.44	19.368	584.64
2	9.301	1.851	509.36	512.63	425.95	666.51	0.5675	39.72	-6.47	0.051	23.990	611.01	19.282	574.08
3	8.902	1.887	517.97	519.77	431.63	675.62	0.5772	39.71	-4.77	0.042	23.990	608.22	19.142	570.27
4	8.488	1.945	521.84	522.64	440.97	683.82	0.5859	40.16	-3.16	0.031	23.990	605.92	19.016	567.03
5	8.057	2.013	526.86	527.07	455.20	696.42	0.5983	40.82	-1.58	0.021	23.990	604.16	18.833	563.82
6	7.604	2.109	531.00	531.00	477.69	714.25	0.6152	41.97	-0.01	0.011	23.990	603.34	18.583	560.91
7	7.125	2.215	536.45	536.66	505.05	736.94	0.6368	43.26	1.61	0.001	23.990	602.55	18.260	557.38
8	6.615	2.336	544.89	545.82	539.17	767.22	0.6656	44.65	3.33	-0.010	23.990	601.80	17.822	552.84
9	6.066	2.482	556.64	558.97	581.52	806.61	0.7036	46.13	5.24	-0.024	23.990	600.90	17.238	546.78
10	5.462	2.608	569.91	574.74	643.54	862.82	0.7583	48.23	7.43	-0.041	23.990	600.61	16.388	538.66
11	4.766	2.700	589.16	598.70	736.27	948.97	0.8443	50.88	10.24	-0.069	23.990	600.45	15.044	525.51
HUB	4.664	2.713												

STREAMLINE NO.	R/RTIP	REL.FLOW ANGLE (DEG)	REL. TANG.VEL. (FT/SEC)	REL. VEL. (FT/SEC)	REL.MACH NUMBER	WHEEL SPEED (FT/SEC)	FLOW COEF.	HEAD COEF.	IDEAL HEAD COEF.	ADIAB. EFF.	DIFFUSION FACTOR	LOSS COEF.	SHOCK LOSS COEF.	ELEMENT SOLIDITY
TIP	1.0000													
1	0.9947	61.73	904.17	1026.57	0.8663	1358.65	0.3416	0.2581	0.3130	0.8246	0.4264	0.1395	0.0457	1.3029
2	0.9534	59.67	876.22	1015.16	0.8644	1302.17	0.3626	0.2383	0.2811	0.8476	0.4102	0.1140	0.0402	1.3646
3	0.9124	57.46	814.63	966.32	0.8256	1246.26	0.3688	0.2372	0.2726	0.8701	0.4221	0.0988	0.0337	1.4280
4	0.8700	55.04	747.38	911.99	0.7813	1188.35	0.3715	0.2372	0.2656	0.8932	0.4365	0.0837	0.0282	1.5006
5	0.8258	51.92	672.74	854.62	0.7343	1127.94	0.3751	0.2372	0.2602	0.9116	0.4539	0.0720	0.0231	1.5852
6	0.7794	47.86	586.86	791.43	0.6817	1064.55	0.3780	0.2372	0.2577	0.9204	0.4766	0.0686	0.0190	1.6859
7	0.7303	42.54	492.41	728.33	0.6293	997.46	0.3819	0.2372	0.2553	0.9291	0.4991	0.0656	0.0150	1.8095
8	0.6780	35.33	386.86	669.01	0.5804	926.03	0.3879	0.2372	0.2531	0.9375	0.5174	0.0634	0.0117	1.9667
9	0.6218	25.60	267.76	619.79	0.5407	849.27	0.3963	0.2372	0.2503	0.9478	0.5229	0.0597	0.0050	2.1781
10	0.5599	11.90	121.15	587.37	0.5162	764.69	0.4057	0.2372	0.2494	0.9512	0.5021	0.0664	0.0001	2.4908
11	0.4885	-6.58	-69.08	602.67	0.5362	667.19	0.4194	0.2386	0.2489	0.9587	0.3917	0.0743	0.0000	3.0458
HUB	0.4780													

STREAMLINE NO.	PCT. SPAN	PRESS. RATIO	TEMP. RATIO	AERO. CHORD (IN.)	MEAN SPACING (IN.)	LOCAL BLADE FORCES RADIUS (IN.)	FOR.AXIAL (LBS/IN)	TANG. (LBS/IN)	--- OUTLET STREAMLINE --- T.E.RAD. /CHORD	DEV. ANGLE (DEG)	++ LAYOUT CONE +++ OUT.BLADE ANGLE (DEG)	OUT.BLADE ANGLE (DEG)	MAX.CAMB. PT.LOC. /CHORD	T.E.EDGE CIR.CENT R*DO/DR
1	1.01	1.6984	1.1981	3.6640	2.8122	9.847	19.7805	-10.9781	0.0015	8.00	53.73	53.56	0.5357	0.2979
2	8.94	1.6353	1.1780	3.6704	2.6898	9.418	17.8948	-10.3496	0.0019	6.80	52.87	52.78	0.5428	0.1022
3	16.78	1.6320	1.1726	3.6681	2.5687	8.994	16.6936	-10.3592	0.0020	4.80	52.66	52.61	0.5529	0.0594
4	24.90	1.6320	1.1681	3.6662	2.4432	8.555	15.5482	-10.1614	0.0023	4.50	50.54	50.49	0.5664	0.1189
5	33.38	1.6320	1.1647	3.6647	2.3119	8.095	14.3341	-9.9835	0.0026	4.60	47.32	47.28	0.5626	0.1738
6	42.27	1.6320	1.1632	3.6641	2.1733	7.610	12.9653	-9.8662	0.0030	5.70	42.16	42.13	0.5578	0.2116
7	51.68	1.6320	1.1617	3.6646	2.0252	7.091	11.4894	-9.6985	0.0034	6.63	35.91	35.89	0.5504	0.2408
8	61.70	1.6320	1.1602	3.6675	1.8648	6.529	9.8564	-9.4707	0.0038	7.52	27.81	27.85	0.5414	0.2934
9	72.46	1.6320	1.1585	3.6758	1.6876	5.909	8.0153	-9.0884	0.0042	8.64	16.96	17.17	0.5292	0.3798
10	84.33	1.6320	1.1579	3.6977	1.4845	5.198	5.7161	-8.5000	0.0046	10.39	1.51	2.31	0.5124	0.5058
11	98.00	1.6364	1.1576	3.7616	1.2350	4.324	2.8865	-8.7263	0.0048	12.52	-19.10	-16.70	0.4856	0.6495

TABLE III. - Continued.

** VALUES OF PARAMETERS ON STREAMLINES AT STATION, 10, WHICH IS AN ANNULUS **

STREAMLINE NO.	RADIUS (IN.)	AXIAL COORD. (IN.)	AXIAL VEL. (FT/SEC)	MERD. VEL. (FT/SEC)	TANG. VEL. (FT/SEC)	ABS. VEL. (FT/SEC)	ABS. MACH NO.	ABS.FLOW ANGLE (DEG)	STREAM. SLOPE (DEG)	STREAM. CURV. (1./IN.)	TOTAL PRESS. (PSIA)	TOTAL TEMP. (DEG.R.)	STATIC PRESS. (PSIA)	STATIC TEMP. (DEG.R.)
TIP	9.630	3.000												
1	9.574	3.003	541.25	542.17	460.66	711.45	0.6031	40.35	-3.34	0.066	23.990	621.29	18.763	579.22
2	9.207	3.026	560.47	561.09	430.32	707.11	0.6045	37.49	-2.71	0.051	23.990	611.01	18.742	569.44
3	8.834	3.049	563.66	563.97	434.95	712.21	0.6107	37.64	-1.91	0.038	23.990	608.24	18.651	566.06
4	8.446	3.073	563.88	563.98	443.20	717.28	0.6166	38.16	-1.08	0.028	23.990	605.93	18.562	563.15
5	8.039	3.098	565.20	565.20	456.19	726.33	0.6260	38.91	-0.18	0.020	23.990	604.17	18.422	560.30
6	7.610	3.124	565.49	565.55	477.29	740.04	0.6392	40.16	0.80	0.012	23.990	603.35	18.224	557.81
7	7.153	3.152	566.83	567.14	503.05	758.09	0.6566	41.57	1.88	0.004	23.990	602.56	17.960	554.76
8	6.662	3.182	570.67	571.49	535.34	783.06	0.6806	43.13	3.07	-0.005	23.990	601.82	17.593	550.81
9	6.129	3.215	577.12	578.82	575.62	816.31	0.7130	44.84	4.39	-0.015	23.990	600.91	17.094	545.48
10	5.537	3.252	585.36	588.46	634.76	865.57	0.7610	47.17	5.88	-0.028	23.990	600.62	16.346	538.28
11	4.860	3.293	601.44	607.32	721.78	943.29	0.8386	49.92	7.98	-0.062	23.990	600.46	15.134	526.41
HUB	4.750	3.300												

TABLE III. - Continued.

** VALUES OF PARAMETERS ON STREAMLINES AT STATION, 11, WHICH IS THE INLET OF STATOR NUMBER, 1, OF STAGE NUMBER, 1 **

STREAMLINE NO.	RADIUS (IN.)	AXIAL COORD. (IN.)	AXIAL VEL. (FT/SEC)	MERD. VEL. (FT/SEC)	TANG. VEL. (FT/SEC)	ABS. VEL. (FT/SEC)	ABS. MACH NO.	ABS.FLOW ANGLE (DEG)	STREAM. SLOPE (DEG)	STREAM. CURV. (1./IN.)	TOTAL PRESS. (PSIA)	TOTAL TEMP (DEG.R.)	STATIC PRESS. (PSIA)	STATIC TEMP (DEG.R.)
TIP	9.599	4.117												
1	9.538	4.117	552.99	553.08	462.42	720.92	0.6118	39.90	-1.05	0.006	23.990	621.15	18.634	577.96
2	9.178	4.115	579.69	579.72	431.66	722.77	0.6189	36.67	-0.58	0.020	23.990	611.01	18.528	567.58
3	8.815	4.120	586.36	586.37	435.85	730.61	0.6277	36.62	-0.19	0.020	23.990	608.26	18.397	563.87
4	8.439	4.124	588.32	588.33	443.53	736.79	0.6347	37.01	0.27	0.018	23.990	605.95	18.291	561.81
5	8.046	4.129	590.15	590.21	455.80	745.72	0.6440	37.68	0.82	0.015	23.990	604.19	18.151	557.94
6	7.632	4.136	590.19	590.39	475.95	758.34	0.6563	38.87	1.47	0.011	23.990	603.37	17.964	555.54
7	7.190	4.144	590.38	590.83	500.45	774.29	0.6718	40.27	2.23	0.007	23.990	602.58	17.727	552.71
8	6.716	4.152	591.85	592.72	531.03	795.81	0.6927	41.86	3.10	0.004	23.990	601.83	17.456	549.15
9	6.200	4.162	594.16	595.68	568.97	823.75	0.7201	43.69	4.10	0.001	23.990	600.92	16.983	544.47
10	5.627	4.174	595.62	598.07	624.65	854.80	0.7602	46.25	5.19	-0.003	23.990	600.63	16.358	538.45
11	4.966	4.180	598.51	601.96	706.33	928.04	0.8231	49.56	6.14	-0.010	23.990	600.47	15.374	528.85
HUB	4.847	4.181												

STREAMLINE NO.	R/RTIP	FLOW COEF.	REL.FLOW ANGLE (DEG)	L.E.RAD. /CHORD	MAX.TH. /CHORD	MAX.TH. PT.LOC. /CHORD	TRAN.PT. LOCATION /CHORD	SEGMENT IN/OUT TURN.RATE	LAYOUT CONE ANG. (DEG)
TIP	1.0000								
1	0.9936	0.3937	57.64	0.0129	0.0797	0.5000	0.3329	1.0000	-0.29
2	0.9561	0.4127	55.81	0.0123	0.0782	0.5000	0.3092	1.0000	0.24
3	0.9184	0.4174	53.70	0.0117	0.0767	0.5000	0.3028	1.0000	0.57
4	0.8792	0.4188	51.44	0.0110	0.0751	0.5000	0.2967	1.0000	0.92
5	0.8382	0.4201	48.65	0.0104	0.0735	0.5000	0.2910	1.0000	1.34
6	0.7950	0.4202	45.10	0.0097	0.0717	0.5000	0.2867	1.0000	1.86
7	0.7491	0.4203	40.59	0.0089	0.0699	0.5000	0.2814	1.0000	2.51
8	0.6996	0.4214	34.62	0.0081	0.0679	0.5000	0.2741	1.0000	3.29
9	0.6459	0.4230	26.66	0.0073	0.0657	0.5000	0.2649	1.0000	4.18
10	0.5862	0.4240	15.26	0.0063	0.0633	0.5000	0.2530	1.0000	5.13
11	0.5174	0.4261	-1.05	0.0052	0.0605	0.5000	0.2343	1.0000	5.46
HUB	0.5050								

STREAMLINE NO.	PCT. PASS.	--- INLET STREAMLINE --- INC. ANGLE (DEG)	S.S.INC. ANGLE (DEG)	IN.BLADE ANGLE (DEG)	IN.BLADE ANGLE (DEG)	TRAN.PT. BL.ANGLE (DEG)	BLD.SET ANGLE (DEG)	1ST SEG. S.S.CAM. (DEG)	++++ LAYOUT CONE ++++ MACH NO. AT SHOCK LOCATION	SH.LOC. AS FRACT OF S.S.	COV.CHAN. AS FRACT OF S.S.	MIN.CHK. AREA MARGIN	MIN.CHK. PT.LOC IN COV.CHAN	L.E.EDGE CIR.CENT. P*DS/DP
1	1.28	3.17	-3.00	36.73	36.70	19.07	10.30	21.77	1.0607	0.3343	0.5159	0.2408	0.0000	-0.0711
2	8.86	3.17	-3.00	33.50	33.52	19.38	10.63	17.97	0.9921	0.3092	0.5749	0.1995	0.0000	0.0298
3	16.49	3.14	-3.00	33.49	33.53	20.23	11.53	17.03	0.9858	0.3027	0.6000	0.1863	0.0000	0.0775
4	24.41	3.09	-3.00	33.92	33.95	21.02	12.15	16.56	0.9869	0.2967	0.6159	0.1774	0.0000	0.0827
5	32.68	3.04	-3.00	34.63	34.66	21.94	12.81	16.25	0.9949	0.2912	0.6236	0.1678	0.0000	0.0971
6	41.40	2.99	-3.00	35.89	35.91	23.08	13.59	16.28	1.0147	0.2874	0.6393	0.1590	0.0000	0.1158
7	50.69	2.93	-3.00	37.34	37.36	24.39	14.43	16.33	1.0398	0.2826	0.6493	0.1491	0.0000	0.1180
8	60.68	2.86	-3.00	39.00	39.01	25.83	15.18	16.42	1.0745	0.2760	0.6583	0.1375	0.0000	0.1275
9	71.53	2.78	-3.00	40.91	40.91	27.57	16.06	16.44	1.1175	0.2675	0.6697	0.1243	0.0000	0.1414
10	83.59	2.68	-3.00	43.56	43.56	29.73	16.79	16.76	1.1881	0.2570	0.6775	0.1141	0.0000	0.1472
11	97.49	2.55	-3.00	47.01	47.00	32.29	16.64	17.39	1.3044	0.2408	0.6801	0.1027	0.0000	0.1401

TABLE III. - Continued.

** VALUES OF PARAMETERS ON STREAMLINES AT STATION, 12, WHICH IS THE OUTLET OF STATOR NUMBER, 1, OF STAGE NUMBER, 1 **

STREAMLINE NO	RADIUS (IN.)	AXIAL COORD. (IN.)	AXIAL VEL. (FT/SEC)	MERD. VEL. (FT/SEC)	TANG. VEL. (FT/SEC)	ABS. VEL. (FT/SEC)	ABS. MACH NO.	ABS.FLOW ANGLE (DEG)	STREAM. SLOPE (DEG)	STREAM. CURV. (1./IN.)	TOTAL PRESS. (PSIA)	TOTAL TEMP. (DEG.R.)	STATIC PRESS. (PSIA)	STATIC TEMP. (DEG.R.)
TIP	9.596	6.353												
1	9.527	6.352	576.38	576.44	0.00	576.44	0.4832	0.00	0.85	0.024	23.515	620.06	20.044	592.46
2	9.187	6.347	572.66	572.71	0.00	572.71	0.4837	0.00	0.76	-0.003	23.548	610.92	20.066	583.66
3	8.838	6.345	572.92	572.98	0.00	572.98	0.4850	0.00	0.84	-0.006	23.558	608.28	20.058	580.99
4	8.475	6.344	573.97	574.06	0.00	574.06	0.4869	0.00	1.04	-0.008	23.568	606.01	20.041	578.61
5	8.098	6.344	574.93	575.09	0.00	575.09	0.4886	0.00	1.37	-0.008	23.570	604.27	20.021	576.77
6	7.703	6.343	574.78	575.07	0.00	575.07	0.4889	0.00	1.82	-0.007	23.558	603.46	20.006	575.96
7	7.287	6.343	572.18	572.67	0.00	572.67	0.4871	0.00	2.38	-0.007	23.506	602.67	19.986	575.43
8	6.842	6.344	567.09	567.89	0.00	567.89	0.4831	0.00	3.04	-0.007	23.428	601.92	19.971	575.[illegible]
9	6.360	6.344	558.18	559.39	0.00	559.39	0.4759	0.00	3.77	-0.007	23.306	601.02	19.958	575.00
10	5.802	6.347	534.48	536.13	0.00	536.13	0.4554	0.00	4.49	-0.009	23.008	600.72	19.956	576.81
11	5.174	6.355	469.49	471.09	0.00	471.09	0.3984	0.00	4.72	-0.013	22.195	600.56	19.895	582.10
HUB	5.043	6.356												

STREAMLINE NO	R/RTIP	FLOW COEF.	HEAD COEF.	IDEAL HEAD COEF.	STATOR PO.RATIO	STAGE PO.RATIO	STAGE AD.EFF.	DIFFUSION FACTOR	STATOR LOSS COEF.	SHOCK LOSS COEF.	ELEMENT SOLIDITY	AERO. CHORD (IN.)	MEAN SPACING (IN.)
TIP	1.0000												
1	0.9927	0.4103	0.2476	0.3130	0.9802	1.6648	0.7911	0.4494	0.0888	0.0000	1.2888	2.2703	1.7616
2	0.9574	0.4077	0.2286	0.2911	0.9816	1.6052	0.8133	0.4307	0.0810	0.0000	1.3378	2.2703	1.6970
3	0.9209	0.4079	0.2278	0.2726	0.9820	1.6026	0.8356	0.4298	0.0772	0.0000	1.3919	2.2704	1.6311
4	0.8831	0.4096	0.2280	0.2656	0.9824	1.6032	0.8586	0.4276	0.0742	0.0000	1.4528	2.2705	1.5629
5	0.8438	0.4093	0.2281	0.2602	0.9825	1.6034	0.8765	0.4283	0.0719	0.0000	1.5223	2.2708	1.4917
6	0.8027	0.4092	0.2278	0.2577	0.9820	1.6026	0.8839	0.4365	0.0718	0.0000	1.6030	2.2713	1.4170
7	0.7593	0.4073	0.2267	0.2553	0.9798	1.5991	0.8878	0.4494	0.0773	0.0000	1.6986	2.2722	1.3377
8	0.7129	0.4037	0.2250	0.2531	0.9766	1.5938	0.8890	0.4685	0.0854	0.0000	1.8149	2.2735	1.2527
9	0.6627	0.3974	0.2223	0.2503	0.9715	1.5854	0.8880	0.4948	0.0977	0.0000	1.9608	2.2755	1.1605
10	0.6067	0.3805	0.2157	0.2494	0.9591	1.5652	0.8647	0.5449	0.1287	0.0000	2.1533	2.2780	1.0579
11	0.5392	0.3342	0.1987	0.2489	0.9252	1.5140	0.7982	0.6457	0.2084	0.0007	2.4320	2.2788	0.9370
HUB	0.5256												

STREAMLINE NO.	PCT. SPAN	LOCAL BLADE FORCES RADIUS (IN.)	FOR.AXIAL (LBS/IN)	TANG. (LBS/IN)	--- OUTLET STREAMLINE --- T.E.RAD. /CHORD	DEV. ANGLE (DEG)	OUT.BLADE ANGLE (DEG)	++ LAYOUT CONE +++ OUT.BLADE ANGLE (DEG)	MAX.CAMB. PT.LOC. /CHORD	T.E.EDGE CIR.CENT R*DO/DR
1	1.53	9.532	2.9331	8.8620	0.0129	16.20	-16.20	-16.09	0.5001	-0.1041
2	8.29	9.183	2.4741	8.1956	0.0123	12.30	-12.30	-12.26	0.4999	-0.0835
3	16.67	8.826	2.4537	8.0516	0.0117	10.50	-10.50	-10.49	0.4998	-0.0588
4	24.63	8.457	2.4684	7.8815	0.0110	9.70	-9.70	-9.70	0.4997	-0.0436
5	32.91	8.072	2.5150	7.7413	0.0104	9.10	-9.10	-9.10	0.4995	-0.0421
6	41.58	7.668	2.6191	7.6595	0.0097	8.80	-8.80	-8.80	0.4992	-0.0419
7	50.73	7.239	2.7056	7.5553	0.0089	8.60	-8.60	-8.60	0.4989	-0.0380
8	60.50	6.779	2.8055	7.4357	0.0082	8.80	-8.80	-8.81	0.4985	-0.0359
9	71.09	6.280	2.9069	7.2530	0.0073	9.00	-9.00	-9.01	0.4979	-0.0296
10	82.90	5.724	2.9903	6.9680	0.0064	10.30	-10.30	-10.29	0.4971	0.0015
11	97.13	5.070	2.7368	7.2357	0.0052	14.20	-14.20	-14.15	0.4965	0.0460

TABLE III. - Continued.

** VALUES OF PARAMETERS ON STREAMLINES AT STATION, 13, WHICH IS AN ANNULUS **

STREAMLINE NO.	RADIUS (IN.)	AXIAL COORD. (IN.)	AXIAL VEL. (FT/SEC)	MERD. VEL. (FT/SEC)	TANG. VEL. (FT/SEC)	ABS. VEL. (FT/SEC)	ABS. MACH NO.	ABS.FLOW ANGLE (DEG)	STREAM. SLOPE (DEG)	STREAM. CURV. (1./IN.)	TOTAL PRESS. (PSIA)	TOTAL TEMP. (DEG.R.)	STATIC PRESS. (PSIA)	STATIC TEMP. (DEG.R.)
TIP	9.603	7.340												
1	9.534	7.340	557.43	557.55	0.00	557.55	0.4668	0.00	-1.16	-0.095	23.515	619.94	20.255	594.11
2	9.190	7.340	570.39	570.48	0.00	570.48	0.4817	0.00	-1.01	-0.054	23.548	610.91	20.092	583.86
3	8.841	7.340	579.35	579.38	0.00	579.38	0.4907	0.00	-0.63	-0.041	23.558	608.28	19.984	580.38
4	8.484	7.340	586.41	586.41	0.00	586.41	0.4979	0.00	-0.13	-0.030	23.568	606.02	19.897	577.43
5	8.114	7.340	591.28	591.30	0.00	591.30	0.5030	0.00	0.48	-0.021	23.570	604.28	19.831	575.21
6	7.730	7.340	593.26	593.38	0.00	593.38	0.5052	0.00	1.19	-0.013	23.558	603.47	19.791	574.19
7	7.325	7.340	591.02	591.33	0.00	591.38	0.5038	0.00	1.98	-0.004	23.506	602.68	19.767	573.60
8	6.893	7.340	584.29	585.01	0.00	585.01	0.4984	0.00	2.84	0.004	23.428	601.93	19.772	573.48
9	6.425	7.340	571.16	572.38	0.00	572.38	0.4875	0.00	3.74	0.013	23.306	601.03	19.810	573.79
10	5.900	7.340	539.70	541.51	0.00	541.51	0.4602	0.00	4.67	0.024	23.008	600.73	19.898	576.34
11	5.259	7.340	458.86	461.06	0.00	461.06	0.3896	0.00	5.59	0.043	22.195	600.58	19.988	582.89
HUB	5.131	7.340												

TABLE III. - Continued.

** VALUES OF PARAMETERS ON STREAMLINES AT STATION, 14, WHICH IS THE INLET OF ROTOR NUMBER, 2 **

STREAMLINE NO.	RADIUS (IN.)	AXIAL COORD. (IN.)	AXIAL VEL. (FT/SEC)	MERD. VEL. (FT/SEC)	TANG. VEL. (FT/SEC)	ABS. VEL. (FT/SEC)	ABS. MACH NO.	ABS.FLOW ANGLE (DEG)	STREAM. SLOPE (DEG)	STREAM. CURV. (1./IN.)	TOTAL PRESS. (PSIA)	TOTAL TEMP. (DEG.R.)	STATIC PRESS. (PSIA)	STATIC TEMP. (DEG.R.)
TIP	9.505	8.677												
1	9.437	8.674	620.66	624.73	0.00	624.73	0.5269	0.00	-6.54	-0.046	23.515	619.71	19.476	587.28
2	9.117	8.658	629.31	631.70	0.00	631.70	0.5362	0.00	-4.99	-0.032	23.548	619.87	19.365	577.03
3	8.791	8.637	635.85	637.11	0.00	637.11	0.5423	0.00	-3.61	-0.026	23.558	628.28	19.288	577.55
4	8.455	8.613	640.50	641.00	0.00	641.00	0.5469	0.00	-2.26	-0.020	23.568	606.32	19.232	571.86
5	8.108	8.587	642.70	642.78	0.00	642.78	0.5493	0.00	-0.91	-0.013	23.570	604.30	19.200	569.94
6	7.746	8.557	641.66	641.68	0.00	641.68	0.5487	0.00	0.45	-0.005	23.558	603.49	19.198	569.25
7	7.363	8.525	635.94	636.28	0.00	636.28	0.5442	0.00	1.85	0.002	23.506	602.70	19.219	569.03
8	6.954	8.489	624.81	625.90	0.00	625.90	0.5351	0.00	3.38	0.012	23.428	601.96	19.279	569.32
9	6.509	8.449	605.55	607.98	0.00	607.98	0.5194	0.00	5.12	0.025	23.306	601.06	19.391	570.32
10	6.008	8.404	565.79	570.23	0.00	570.23	0.4857	0.00	7.16	0.041	23.008	600.76	19.580	573.72
11	5.387	8.334	468.77	475.47	0.00	475.47	0.4022	0.00	9.63	0.097	22.195	600.60	19.854	581.79
HUB	5.265	8.320												

STREAMLINE NO.	R/RTIP	REL.FLOW ANGLE (DEG)	REL. TANG.VEL. (FT/SEC)	REL. VEL. (FT/SEC)	REL.MACH NUMBER	WHEEL SPEED (FT/SEC)	FLOW COEF.	L.E.RAD. /CHORD	MAX.TH. /CHORD	MAX.TH. PT.LOC. /CHORD	TRAN.PT. LOCATION /CHORD	SEGMENT IN/OUT TURN RATE	LAYOUT CONE ANG. (DEG)
TIP	1.0000					1339.40							
1	0.9930	64.69	1321.11	1461.38	1.2304	1321.11	0.4665	0.0061	0.0340	0.5000	0.6630	0.6100	-5.62
2	0.9594	63.67	1276.32	1424.09	1.2089	1276.32	0.4730	0.0068	0.0351	0.5000	0.6351	0.6630	-5.13
3	0.9251	62.63	1230.71	1385.84	1.1796	1230.71	0.4779	0.0075	0.0375	0.5000	0.6051	0.7670	-3.32
4	0.8898	61.56	1183.77	1346.17	1.1485	1183.77	0.4814	0.0082	0.0410	0.5000	0.5730	0.8860	-2.39
5	0.8533	60.48	1135.17	1304.52	1.1148	1135.17	0.4831	0.0090	0.0457	0.5000	0.5389	0.9810	-0.99
6	0.8151	59.39	1084.43	1260.06	1.0775	1084.43	0.4823	0.0097	0.0512	0.5000	0.5031	1.0000	0.37
7	0.7749	58.32	1030.88	1211.43	1.0361	1030.88	0.4780	0.0105	0.0573	0.5000	0.4655	1.0000	1.79
8	0.7318	57.26	973.59	1157.43	0.9896	973.59	0.4696	0.0114	0.0639	0.5000	0.4261	1.0000	3.37
9	0.6850	56.29	911.27	1095.46	0.9358	911.27	0.4552	0.0124	0.0704	0.5000	0.3852	1.0000	5.29
10	0.6322	55.86	841.07	1016.15	0.8655	841.07	0.4253	0.0134	0.0763	0.5000	0.3432	1.0000	7.76
11	0.5669	57.77	754.17	891.54	0.7541	754.17	0.3524	0.0147	0.0799	0.5000	0.2972	1.0000	11.21
HUB	0.5540												

STREAMLINE NO.	PCT. PASS.	--- INLET STREAMLINE --- INC. ANGLE (DEG)	S.S.INC. ANGLE (DEG)	IN.BLADE ANGLE (DEG)	IN.BLADE ANGLE (DEG)	TRAN.PT. BL.ANGLE (DEG)	BLD SET ANGLE (DEG)	1ST SEG. S.S.CAM. (DEG)	LAYOUT CONE MACH NO. AT SHOCK LOCATION	SH.LOC. AS FRACT OF S.S.	COV.CHAN. AS FRACT OF S.S.	MIN.CHK. AREA MAPSIN	MIN.CHK. PT.LOC.IN COV.CHAN.	L.E EDGE CIR.CENT. R*DO/DR
1	1.57	2.54	0.00	62.15	62.15	59.01	59.61	6.51	1.3470	0.6647	0.3353	0.0415	0.4962	-0.0043
2	9.11	2.50	-0.00	61.17	61.16	58.00	58.50	6.35	1.3742	0.6367	0.3633	0.0341	0.4121	-0.0226
3	16.80	2.62	0.00	60.01	60.01	56.49	56.97	6.69	1.3031	0.6065	0.3935	0.0333	0.2977	-0.0521
4	24.71	2.87	0.00	58.70	58.70	54.77	55.19	7.22	1.2842	0.5741	0.4259	0.0337	0.2093	-0.0618
5	32.90	3.23	0.00	57.25	57.25	52.83	53.12	7.91	1.2669	0.5396	0.4604	0.0344	0.1517	-0.0674
6	41.45	3.69	0.00	55.70	55.70	50.70	50.73	8.71	1.2498	0.5032	0.4968	0.0349	0.1196	-0.0717
7	50.48	4.21	0.00	54.11	54.11	48.33	47.88	9.70	1.2356	0.4649	0.5351	0.0374	0.0894	-0.0771
8	60.14	4.74	-0.00	52.52	52.52	45.69	44.48	10.86	1.2193	0.4248	0.5752	0.0422	0.0635	-0.0820
9	70.64	5.21	0.00	51.08	51.06	42.84	40.36	12.19	1.1744	0.3831	0.6169	0.0522	0.0263	-0.0862
10	82.47	5.47	0.00	50.39	50.33	39.86	35.05	14.10	1.1149	0.3405	0.6595	0.0765	0.0000	-0.1062
11	97.12	5.12	-0.00	52.65	52.41	36.80	26.39	18.35	1.0280	0.2960	0.7032	0.1713	0.0000	-0.1615

TABLE III. - Continued.

** VALUES OF PARAMETERS ON STREAMLINES AT STATION, 15, WHICH IS THE OUTLET OF ROTOR NUMBER, 2 **

STREAMLINE NO.	RADIUS (IN.)	AXIAL COORD. (IN.)	AXIAL VEL. (FT/SEC)	MERD. VEL. (FT/SEC)	TANG. VEL. (FT/SEC)	ABS. VEL. (FT/SEC)	ABS. MACH NO.	ABS.FLOW ANGLE (DEG)	STREAM. SLOPE (DEG)	STREAM. CURV. (1./IN.)	TOTAL PRESS. (PSIA)	TOTAL TEMP. (DEG.R.)	STATIC PRESS. (PSIA)	STATIC TEMP. (DEG.R.)
TIP	9.378	9.700												
1	9.317	9.704	520.24	522.57	431.58	677.74	0.5327	39.55	-5.40	0.085	35.879	712.97	29.585	674.98
2	9.021	9.726	520.83	522.16	426.02	673.90	0.5346	39.21	-4.09	0.051	35.879	700.05	29.545	662.47
3	8.718	9.754	522.20	522.89	430.57	677.35	0.5394	39.47	-2.94	0.040	35.879	695.40	29.444	657.42
4	8.407	9.783	524.24	524.50	435.61	681.80	0.5449	39.71	-1.80	0.029	35.879	691.04	29.327	652.55
5	8.087	9.817	525.92	525.95	445.89	689.52	0.5527	40.29	-0.64	0.019	35.879	688.02	29.161	648.64
6	7.754	9.854	526.36	526.39	462.66	700.81	0.5629	41.31	0.56	0.008	35.879	686.79	28.945	646.10
7	7.406	9.898	526.69	526.96	484.09	715.57	0.5758	42.57	1.82	-0.003	35.879	685.95	28.665	643.53
8	7.040	9.947	527.92	528.75	510.15	734.74	0.5926	43.97	3.21	-0.014	35.879	685.36	28.300	640.63
9	6.653	10.002	528.68	530.55	542.36	758.71	0.6136	45.63	4.81	-0.029	35.879	684.85	27.836	637.15
10	6.234	10.066	516.58	520.19	597.09	791.90	0.6414	48.94	6.75	-0.048	35.879	687.19	27.214	635.23
11	5.746	10.144	461.18	467.35	710.06	850.06	0.6884	56.65	9.32	-0.103	35.879	695.32	26.143	635.46
HUB	5.647	10.160												

STREAMLINE NO.	R/RTIP	REL.FLOW ANGLE (DEG)	REL. TANG.VEL. (FT/SEC)	REL. VEL. (FT/SEC)	REL.MACH NUMBER	WHEEL SPEED (FT/SEC)	FLOW COEF.	HEAD COEF.	IDEAL HEAD COEF.	ADIAB. EFF.	DIFFUSION FACTOR	LOSS COEF.	SHOCK LOSS COEF.	ELEMENT SOLIDITY
TIP	1.0000													
1	0.9935	59.09	872.79	1017.27	0.7996	1304.37	0.3910	0.2698	0.3181	0.8483	0.4162	0.1108	0.0270	1.3069
2	0.9619	58.04	836.87	986.41	0.7825	1262.89	0.3915	0.2650	0.3040	0.8719	0.4173	0.0936	0.0241	1.3526
3	0.9297	56.50	789.96	947.34	0.7544	1220.53	0.3925	0.2636	0.2969	0.8879	0.4269	0.0833	0.0216	1.4005
4	0.8965	54.72	741.41	908.18	0.7259	1177.02	0.3941	0.2624	0.2897	0.9058	0.4363	0.0713	0.0195	1.4538
5	0.8624	52.53	686.29	864.65	0.6931	1132.18	0.3953	0.2616	0.2852	0.9170	0.4500	0.0646	0.0177	1.5134
6	0.8269	49.80	622.95	815.57	0.6550	1085.61	0.3956	0.2616	0.2838	0.9217	0.4689	0.0636	0.0159	1.5812
7	0.7898	46.37	552.78	763.71	0.6146	1036.88	0.3959	0.2627	0.2836	0.9262	0.4903	0.0634	0.0147	1.6597
8	0.7507	41.96	475.47	711.09	0.5735	985.62	0.3968	0.2645	0.2841	0.9311	0.5121	0.0632	0.0133	1.7526
9	0.7094	36.25	389.04	657.90	0.5320	931.39	0.3974	0.2676	0.2854	0.9376	0.5336	0.0626	0.0084	1.8659
10	0.6648	27.92	275.66	588.71	0.4768	872.76	0.3883	0.2759	0.2944	0.9372	0.5693	0.0728	0.0033	2.0123
11	0.6127	11.41	94.34	476.77	0.3861	804.40	0.3467	0.2998	0.3227	0.9289	0.6495	0.1109	0.0001	2.2303
HUB	0.6022													

STREAMLINE NO.	PCT. SPAN	PRESS. RATIO	TEMP. RATIO	AERO. CHORD (IN.)	MEAN SPACING (IN.)	LOCAL BLADE FORCES RADIUS (IN.)	FOR.AXIAL (LBS/IN)	TANG. (LBS/IN)	--- OUTLET STREAMLINE --- T.E.RAD. /CHORD	DEV. ANGLE (DEG)	++ LAYOUT CONE +++ OUT.BLADE ANGLE (DEG)	OUT.BLADE ANGLE (DEG)	MAX.CAMB. PT.LOC. /CHORD	T.E.EDGE CIR.CENT R*DO/DR
1	1.63	1.5258	1.1505	2.0262	1.5504	9.377	13.7589	-8.3978	0.0061	2.60	56.49	56.42	0.5367	0.0310
2	9.57	1.5237	1.1460	2.0281	1.4995	9.069	13.2124	-8.2095	0.0069	2.70	55.34	55.27	0.5339	0.0724
3	17.68	1.5230	1.1432	2.0273	1.4475	8.754	12.5914	-8.1036	0.0076	2.93	53.57	53.52	0.5238	0.0945
4	26.02	1.5224	1.1403	2.0267	1.3941	8.431	11.9694	-7.9553	0.0083	3.20	51.52	51.49	0.5118	0.1041
5	34.60	1.5222	1.1385	2.0263	1.3389	8.098	11.2899	-7.8518	0.0091	3.53	49.00	48.98	0.5021	0.1167
6	43.52	1.5230	1.1380	2.0262	1.2815	7.750	10.5453	-7.7874	0.0099	4.02	45.78	45.77	0.4998	0.1315
7	52.85	1.5263	1.1381	2.0266	1.2211	7.385	9.7717	-7.7158	0.0108	4.70	41.67	41.67	0.4995	0.1490
8	62.66	1.5314	1.1385	2.0277	1.1570	6.997	8.9441	-7.6187	0.0116	5.55	36.41	36.43	0.4989	0.1693
9	73.05	1.5395	1.1394	2.0303	1.0881	6.581	8.0526	-7.4390	0.0126	6.70	29.55	29.61	0.4981	0.2035
10	84.27	1.5594	1.1439	2.0365	1.0121	6.121	6.9670	-7.1181	0.0136	8.55	19.37	19.59	0.4968	0.2938
11	97.36	1.6165	1.1577	2.0527	0.9204	5.566	5.3354	-7.6779	0.0148	12.40	-0.99	-0.19	0.4946	0.4105

TABLE III. - Continued.

** VALUES OF PARAMETERS ON STREAMLINES AT STATION, 16, WHICH IS AN ANNULUS **

STREAMLINE NO.	RADIUS (IN.)	AXIAL COORD. (IN.)	AXIAL VEL. (FT/SEC)	MERD. VEL. (FT/SEC)	TANG. VEL. (FT/SEC)	ABS. VEL. (FT/SEC)	ABS. MACH NO.	ABS.FLOW ANGLE (DEG)	STREAM. SLOPE (DEG)	STREAM. CURV. (1./IN.)	TOTAL PRESS. (PSIA)	TOTAL TEMP. (DEG.R.)	STATIC PRESS. (PSIA)	STATIC TEMP. (DEG.R.)
TIP	9.308	11.010												
1	9.250	11.010	553.26	553.37	434.68	703.68	0.5545	38.15	-1.12	0.029	35.879	712.55	29.127	671.59
2	8.969	11.010	556.12	556.18	428.46	702.08	0.5583	37.61	-0.85	0.027	35.879	700.00	29.043	659.20
3	8.683	11.010	557.83	557.85	432.33	705.77	0.5634	37.78	-0.50	0.021	35.879	695.41	28.935	654.17
4	8.388	11.010	559.97	559.97	436.59	710.06	0.5689	37.94	-0.08	0.015	35.879	691.07	28.816	649.32
5	8.085	11.010	561.41	561.42	446.01	717.02	0.5762	38.47	0.40	0.009	35.879	688.07	28.658	645.48
6	7.769	11.010	561.37	561.44	461.77	726.94	0.5852	39.44	0.97	0.003	35.879	686.84	28.461	643.06
7	7.439	11.010	560.91	561.13	481.96	739.70	0.5966	40.66	1.61	-0.004	35.879	686.00	28.212	640.67
8	7.091	11.010	560.97	561.44	506.49	756.14	0.6111	42.05	2.35	-0.012	35.879	685.41	27.892	638.03
9	6.722	11.010	560.10	560.97	536.78	776.42	0.6290	43.74	3.20	-0.021	35.879	684.90	27.492	634.95
10	6.322	11.010	546.67	548.17	588.79	804.46	0.6524	47.05	4.24	-0.032	35.879	687.24	26.965	633.61
11	5.856	11.010	488.11	490.55	696.70	852.07	0.6901	54.85	5.72	-0.040	35.879	695.31	26.102	635.16
HUB	5.763	11.010												

TABLE III. - Continued.

** VALUES OF PARAMETERS ON STREAMLINES AT STATION, 17, WHICH IS THE INLET OF STATOR NUMBER, 1, OF STAGE NUMBER, 2 **

STREAMLINE NO.	RADIUS (IN.)	AXIAL COORD. (IN.)	AXIAL VEL. (FT/SEC)	MERD. VEL. (FT/SEC)	TANG. VEL. (FT/SEC)	ABS. VEL. (FT/SEC)	ABS. MACH NO.	ABS.FLOW ANGLE (DEG)	STREAM. SLOPE (DEG)	STREAM. CURV. (1./IN.)	TOTAL PRESS. (PSIA)	TOTAL TEMP. (DEG.R.)	STATIC PRESS. (PSIA)	STATIC TEMP. (DEG.R.)
TIP	9.299	11.859												
1	9.242	11.860	559.71	559.71	435.07	708.92	0.5590	37.86	-0.15	0.011	35.879	712.74	29.031	670.78
2	8.964	11.863	565.12	565.12	428.72	709.34	0.5545	37.19	0.06	0.011	35.879	699.49	28.912	658.35
3	8.681	11.868	568.78	568.79	432.40	714.48	0.5708	37.24	0.27	0.010	35.879	695.43	28.776	653.16
4	8.392	11.870	572.24	572.26	436.42	719.68	0.5771	37.33	0.50	0.007	35.879	691.10	28.639	648.21
5	8.094	11.873	574.66	574.71	445.52	727.17	0.5848	37.78	0.77	0.003	35.879	688.10	28.470	644.30
6	7.785	11.877	575.43	575.53	460.84	737.30	0.5941	38.69	1.07	-0.001	35.879	686.87	28.267	641.84
7	7.462	11.882	575.59	575.77	480.46	749.90	0.6054	39.84	1.42	-0.006	35.879	686.04	28.018	639.44
8	7.123	11.887	576.03	576.32	504.22	765.75	0.6194	41.18	1.81	-0.011	35.879	685.44	27.706	636.85
9	6.764	11.893	575.46	575.90	533.43	784.99	0.6364	42.81	2.24	-0.018	35.879	684.93	27.324	633.87
10	6.377	11.903	562.69	563.33	583.72	811.21	0.6583	46.02	2.73	-0.026	35.879	687.26	26.830	632.74
11	5.931	11.924	508.69	509.69	687.93	856.18	0.6938	53.46	3.59	-0.041	35.879	695.29	26.018	634.57
HUB	5.842	11.929												

STREAMLINE NO.	R/RTIP	FLOW COEF.	REL.FLOW ANGLE (DEG)	L.E.RAD. /CHORD	MAX.TH. /CHORD	MAX.TH. PT.LOC. /CHORD	TRAN.PT. LOCATION /CHORD	SEGMENT IN/OUT TURN.RATE	LAYOUT CONE ANG. (DEG)
TIP	1.0000								
1	0.9939	0.4207	56.91	0.0139	0.0797	0.5000	0.3281	1.0000	0.13
2	0.9640	0.4248	55.63	0.0132	0.0781	0.5000	0.3213	1.0000	0.37
3	0.9336	0.4275	54.00	0.0126	0.0764	0.5000	0.3174	1.0000	0.55
4	0.9024	0.4301	52.22	0.0119	0.0748	0.5000	0.3117	1.0000	0.73
5	0.8704	0.4319	50.11	0.0112	0.0730	0.5000	0.3069	1.0000	0.90
6	0.8372	0.4325	47.54	0.0105	0.0712	0.5000	0.3038	1.0000	1.09
7	0.8025	0.4326	44.42	0.0098	0.0694	0.5000	0.3009	1.0000	1.30
8	0.7660	0.4330	40.55	0.0090	0.0674	0.5000	0.2973	1.0000	1.52
9	0.7274	0.4325	35.68	0.0081	0.0653	0.5000	0.2932	1.0000	1.74
10	0.6858	0.4229	28.75	0.0072	0.0631	0.5000	0.2927	1.0000	1.94
11	0.6378	0.3824	15.61	0.0062	0.0605	0.5000	0.2993	1.0000	2.43
HUB	0.6282								

STREAMLINE NO.	PCT. PASS.	--- INLET STREAMLINE --- INC. ANGLE (DEG)	S.S.INC. ANGLE (DEG)	IN.BLADE ANGLE (DEG)	IN.BLADE ANGLE (DEG)	TRAN.PT. BL.ANGLE (DEG)	BLD.SET ANGLE (DEG)	++++ LAYOUT CONE ++++ 1ST SEG. S.S.CAM. (DEG)	MACH NO. AT SHOCK LOCATION	SH.LOC. AS FRACT OF S.S.	COV.CHAN. AS FRACT OF S.S.	MIN.CHK. AREA MARGIN	MIN.CHK. PT.LOC.IN COV.CHAN.	L.E.EDGE CIR.CENT. R*DO/DR
1	1.63	2.75	-3.00	35.10	35.11	18.47	9.76	20.39	0.9415	0.3278	0.5247	0.2960	0.0000	0.0520
2	9.69	2.75	-3.00	34.44	34.45	19.29	10.83	18.83	0.9208	0.3206	0.5586	0.2761	0.0000	0.0672
3	17.86	2.72	-3.00	34.52	34.54	20.13	11.82	18.00	0.9153	0.3166	0.5818	0.2641	0.0000	0.0673
4	26.24	2.68	-3.00	34.65	34.66	20.79	12.39	17.37	0.9133	0.3108	0.5987	0.2529	0.0000	0.0637
5	34.86	2.63	-3.00	35.15	35.16	21.49	12.89	17.09	0.9200	0.3063	0.6101	0.2431	0.0000	0.0747
6	43.79	2.57	-3.00	36.12	36.12	22.34	13.47	17.12	0.9354	0.3035	0.6174	0.2350	0.0000	0.0872
7	53.12	2.50	-3.00	37.34	37.34	23.33	14.14	17.28	0.9565	0.3011	0.6236	0.2267	0.0000	0.0946
8	62.93	2.43	-3.00	38.76	38.74	24.40	14.75	17.53	0.9841	0.2980	0.6283	0.2180	0.0000	0.1026
9	73.31	2.34	-3.00	40.46	40.44	25.66	15.45	17.87	1.0188	0.2947	0.6330	0.2092	0.0000	0.1283
10	84.52	2.22	-3.00	43.79	43.73	27.49	16.36	19.26	1.0855	0.2955	0.6264	0.2112	0.0000	0.1929
11	97.43	1.99	-3.00	51.47	51.37	30.73	17.76	23.59	1.2476	0.3054	0.5942	0.2631	0.0000	0.2983

TABLE III. - Continued.

** VALUES OF PARAMETERS ON STREAMLINES AT STATION, 18, WHICH IS THE OUTLET OF STATOR NUMBER, 1, OF STAGE NUMBER, 2 **

STREAMLINE NO.	RADIUS (IN.)	AXIAL COORD. (IN.)	AXIAL VEL. (FT/SEC)	MERD. VEL. (FT/SEC)	TANG. VEL. (FT/SEC)	ABS. VEL. (FT/SEC)	ABS. MACH NO.	ABS.FLOW ANGLE (DEG)	STREAM. SLOPE (DEG)	STREAM. CURV. (1./IN.)	TOTAL PRESS. (PSIA)	TOTAL TEMP. (DEG.R.)	STATIC PRESS. (PSIA)	STATIC TEMP. (DEG.R.)
TIP	9.302	13.588												
1	9.246	13.583	551.10	551.11	0.00	551.11	0.4299	0.00	0.18	-0.004	35.272	710.71	31.059	685.51
2	8.975	13.586	550.33	550.34	0.00	550.34	0.4327	0.00	0.38	-0.003	35.320	699.73	31.064	674.67
3	8.698	13.584	550.35	550.38	0.00	550.38	0.4341	0.00	0.55	-0.004	35.344	695.42	31.057	670.34
4	8.413	13.583	550.45	550.49	0.00	550.49	0.4355	0.00	0.71	-0.003	35.364	691.22	31.048	666.13
5	8.121	13.583	550.18	550.24	0.00	550.24	0.4363	0.00	0.86	-0.002	35.374	688.30	31.043	663.22
6	7.817	13.583	548.88	548.97	0.00	548.97	0.4356	0.00	1.01	-0.002	35.357	687.08	31.040	662.11
7	7.501	13.583	545.86	545.97	0.00	545.97	0.4334	0.00	1.16	-0.001	35.305	686.25	31.034	661.55
8	7.168	13.583	541.16	541.31	0.00	541.31	0.4298	0.00	1.32	-0.000	35.231	685.65	31.034	661.37
9	6.815	13.584	533.40	533.58	0.00	533.58	0.4236	0.00	1.49	0.001	35.111	685.15	31.039	661.56
10	6.434	13.586	516.10	516.33	0.00	516.33	0.4087	0.00	1.69	0.002	34.840	687.42	31.057	665.33
11	6.002	13.595	476.63	476.95	0.00	476.95	0.3746	0.00	2.09	0.010	34.217	695.10	31.061	676.26
HUB	5.915	13.596												

STREAMLINE NO.	R/RTIP	FLOW COEF.	HEAD COEF.	IDEAL HEAD COEF.	STATOR PO.RATIO	STAGE PO.RATIO	STAGE AD.EFF.	DIFFUSION FACTOR	STATOR LOSS COEF.	SHOCK LOSS COEF.	ELEMENT SOLIDITY	AERO. CHORD (IN.)	MEAN SPACING (IN.)
TIP	1.0000												
1	0.9940	0.4142	0.2583	0.3181	0.9831	1.5000	0.8121	0.4646	0.0886	0.0000	1.2676	1.7530	1.3829
2	0.9649	0.4137	0.2546	0.3040	0.9844	1.4999	0.8375	0.4553	0.0802	0.0000	1.3065	1.7531	1.3418
3	0.9351	0.4137	0.2537	0.2969	0.9851	1.5003	0.8543	0.4538	0.0752	0.0000	1.3486	1.7531	1.2999
4	0.9045	0.4137	0.2528	0.2897	0.9857	1.5005	0.8728	0.4522	0.0711	0.0000	1.3947	1.7532	1.2570
5	0.8730	0.4135	0.2522	0.2852	0.9859	1.5008	0.8843	0.4549	0.0682	0.0000	1.4456	1.7532	1.2128
6	0.8404	0.4126	0.2519	0.2838	0.9855	1.5009	0.8877	0.4630	0.0685	0.0000	1.5024	1.7533	1.1670
7	0.8064	0.4103	0.2521	0.2836	0.9840	1.5019	0.8888	0.4759	0.0730	0.0000	1.5666	1.7534	1.1192
8	0.7706	0.4068	0.2525	0.2841	0.9819	1.5038	0.8890	0.4932	0.0793	0.0000	1.6404	1.7536	1.0690
9	0.7327	0.4009	0.2534	0.2854	0.9786	1.5065	0.8878	0.5163	0.0898	0.0000	1.7265	1.7537	1.0158
10	0.6917	0.3879	0.2566	0.2944	0.9710	1.5143	0.8715	0.5592	0.1148	0.0000	1.8303	1.7539	0.9583
11	0.6452	0.3583	0.2683	0.3227	0.9537	1.5416	0.8314	0.6461	0.1685	0.0000	1.9655	1.7543	0.8925
HUB	0.6359												

STREAMLINE NO.	PCT. SPAN	LOCAL BLADE FORCES RADIUS (IN.)	FOR.AXIAL (LBS/IN)	TANG. (LBS/IN)	T.E.RAD. /CHORD	--- OUTLET STREAMLINE --- DEV. ANGLE (DEG)	OUT.BLADE ANGLE (DEG)	++ LAYOUT CONE +++ OUT.BLADE ANGLE (DEG)	MAX.CAMB. PT.LOC. /CHORD	T.E.EDGE CIR.CENT R*DO/DR
1	1.64	9.244	2.6326	8.5858	0.0139	15.60	-15.60	-15.60	0.5000	-0.1054
2	9.65	8.969	2.5942	8.3851	0.0132	12.80	-12.80	-12.80	0.4999	-0.0856
3	17.83	8.689	2.6079	8.2772	0.0126	10.90	-10.90	-10.90	0.4998	-0.0602
4	26.23	8.402	2.6155	8.1328	0.0119	9.90	-9.90	-9.90	0.4998	-0.0389
5	34.88	8.107	2.6684	8.0401	0.0112	9.40	-9.40	-9.40	0.4997	-0.0320
6	43.83	7.801	2.7616	7.9952	0.0105	9.20	-9.20	-9.20	0.4997	-0.0312
7	53.18	7.482	2.8640	7.9570	0.0097	9.10	-9.10	-9.10	0.4996	-0.0285
8	63.00	7.146	2.9863	7.9150	0.0090	9.30	-9.30	-9.30	0.4995	-0.0257
9	73.41	6.790	3.1263	7.8308	0.0081	9.60	-9.60	-9.60	0.4994	-0.0199
10	84.68	6.405	3.3939	7.7221	0.0072	11.10	-11.10	-11.10	0.4993	0.0031
11	97.45	5.966	4.0389	8.4928	0.0062	16.00	-16.00	-15.99	0.4991	0.0346

TABLE III. - Continued.

** VALUES OF PARAMETERS ON STREAMLINES AT STATION, 19, WHICH IS AN ANNULUS **

STREAMLINE NO.	RADIUS (IN.)	AXIAL COORD. (IN.)	AXIAL VEL. (FT/SEC)	MERD. VEL. (FT/SEC)	TANG. VEL. (FT/SEC)	ABS. VEL. (FT/SEC)	ABS. MACH NO.	ABS.FLOW ANGLE (DEG)	STREAM. SLOPE (DEG)	STREAM. CURV. (1./IN.)	TOTAL PRESS. (PSIA)	TOTAL TEMP. (DEG.R.)	STATIC PRESS. (PSIA)	STATIC TEMP. (DEG.R.)
TIP	9.302	14.440												
1	9.247	14.440	558.98	558.98	0.00	558.98	0.4363	0.00	-0.02	-0.004	35.272	710.50	30.951	684.63
2	8.979	14.440	558.07	558.07	0.00	558.07	0.4390	0.00	0.21	-0.002	35.320	699.70	30.948	673.93
3	8.705	14.440	557.62	557.63	0.00	557.63	0.4400	0.00	0.46	0.001	35.344	695.42	30.949	669.67
4	8.424	14.440	556.91	556.95	0.00	556.95	0.4408	0.00	0.70	0.002	35.364	691.24	30.951	665.55
5	8.134	14.440	555.67	555.75	0.00	555.75	0.4408	0.00	0.94	0.004	35.374	688.33	30.960	662.74
6	7.834	14.440	553.35	553.46	0.00	553.46	0.4393	0.00	1.16	0.004	35.357	687.11	30.972	661.73
7	7.520	14.440	549.31	549.46	0.00	549.46	0.4363	0.00	1.35	0.005	35.305	686.28	30.982	661.26
8	7.190	14.440	543.70	543.89	0.00	543.89	0.4319	0.00	1.52	0.004	35.231	685.68	30.996	661.17
9	6.839	14.440	535.41	535.63	0.00	535.63	0.4253	0.00	1.66	0.002	35.111	685.18	31.009	661.41
10	6.460	14.440	518.40	518.64	0.00	518.64	0.4106	0.00	1.77	-0.001	34.840	687.45	31.025	665.16
11	5.032	14.440	483.09	483.34	0.00	483.34	0.3797	0.00	1.85	-0.020	34.217	695.07	30.979	675.72
HUB	5.947	14.440												

** VALUES OF PARAMETERS ON STREAMLINES AT STATION, 20, WHICH IS AN ANNULUS **

STREAMLINE NO.	RADIUS (IN.)	AXIAL COORD. (IN.)	AXIAL VEL. (FT/SEC)	MERD. VEL. (FT/SEC)	TANG. VEL. (FT/SEC)	ABS. VEL. (FT/SEC)	ABS. MACH NO.	ABS.FLOW ANGLE (DEG)	STREAM. SLOPE (DEG)	STREAM. CURV. (1./IN.)	TOTAL PRESS. (PSIA)	TOTAL TEMP. (DEG.R.)	STATIC PRESS. (PSIA)	STATIC TEMP. (DEG.R.)
TIP	9.298	15.700												
1	9.243	15.705	586.62	586.64	0.00	586.64	0.4589	0.00	-0.39	-0.006	35.272	710.16	30.534	681.67
2	8.985	15.728	585.11	585.12	0.00	585.12	0.4612	0.00	0.39	0.017	35.320	699.64	30.536	671.31
3	8.722	15.752	581.93	582.04	0.00	582.04	0.4601	0.00	1.08	0.023	35.344	695.41	30.575	667.35
4	8.451	15.777	577.77	578.03	0.00	578.03	0.4582	0.00	1.69	0.027	35.364	691.27	30.628	663.59
5	8.170	15.803	572.43	572.87	0.00	572.87	0.4549	0.00	2.23	0.031	35.374	688.37	30.697	661.19
6	7.878	15.829	565.45	566.07	0.00	566.07	0.4497	0.00	2.68	0.034	35.357	687.16	30.780	660.61
7	7.572	15.857	556.15	556.94	0.00	556.94	0.4424	0.00	3.05	0.037	35.305	686.33	30.869	660.63
8	7.248	15.887	544.59	545.50	0.00	545.50	0.4332	0.00	3.31	0.039	35.231	685.74	30.972	661.08
9	6.901	15.918	529.39	530.35	0.00	530.35	0.4209	0.00	3.44	0.041	35.111	685.23	31.086	661.92
10	6.521	15.953	503.96	504.83	0.00	504.83	0.3993	0.00	3.37	0.043	34.840	687.48	31.218	666.36
11	6.084	15.992	455.20	455.77	0.00	455.77	0.3575	0.00	2.88	0.044	34.217	695.01	31.326	677.80
HUB	6.000	16.000												

TABLE III. - Continued.

** VALUES OF PARAMETERS ON STREAMLINES AT STATION, 21, WHICH IS AN ANNULUS **

STREAMLINE NO.	RADIUS (IN.)	AXIAL COORD. (IN.)	AXIAL VEL. (FT/SEC)	MERD. VEL. (FT/SEC)	TANG. VEL. (FT/SEC)	ABS. VEL. (FT/SEC)	ABS. MACH NO.	ABS.FLOW ANGLE (DEG)	STREAM. SLOPE (DEG)	STREAM. CURV. (1./IN.)	TOTAL PRESS. (PSIA)	TOTAL TEMP. (DEG.R.)	STATIC PRESS. (PSIA)	STATIC TEMP. (DEG.R.)
TIP	9.319	17.000												
1	9.266	17.010	663.21	664.83	0.00	664.83	0.5232	0.00	4.00	0.123	35.272	709.79	29.278	673.24
2	9.033	17.054	643.83	646.19	0.00	646.19	0.5117	0.00	4.90	0.102	35.320	699.57	29.551	665.01
3	8.791	17.100	627.26	630.37	0.00	630.37	0.5001	0.00	5.70	0.097	35.344	695.40	29.803	662.51
4	8.540	17.148	611.20	615.05	0.00	615.05	0.4888	0.00	6.41	0.093	35.364	691.29	30.041	659.97
5	8.278	17.198	595.17	599.71	0.00	599.71	0.4771	0.00	7.06	0.090	35.374	688.42	30.277	658.64
6	8.002	17.251	578.45	583.64	0.00	583.64	0.4642	0.00	7.65	0.088	35.357	687.22	30.506	658.99
7	7.710	17.307	560.05	565.81	0.00	565.81	0.4497	0.00	8.19	0.087	35.305	686.38	30.733	659.85
8	7.399	17.366	539.69	545.95	0.00	545.95	0.4336	0.00	8.68	0.086	35.231	685.79	30.965	661.09
9	7.062	17.430	515.63	522.28	0.00	522.28	0.4143	0.00	9.15	0.088	35.111	685.29	31.203	662.68
10	6.689	17.501	480.73	487.55	0.00	487.55	0.3853	0.00	9.59	0.091	34.840	687.52	31.453	667.82
11	6.250	17.585	418.18	424.72	0.00	424.72	0.3326	0.00	10.07	0.111	34.217	694.95	31.696	680.01
HUB	6.171	17.600												

** VALUES OF PARAMETERS ON STREAMLINES AT STATION, 22, WHICH IS AN ANNULUS **

STREAMLINE NO.	RADIUS (IN.)	AXIAL COORD. (IN.)	AXIAL VEL. (FT/SEC)	MERD. VEL. (FT/SEC)	TANG. VEL. (FT/SEC)	ABS. VEL. (FT/SEC)	ABS. MACH NO.	ABS.FLOW ANGLE (DEG)	STREAM. SLOPE (DEG)	STREAM. CURV. (1./IN.)	TOTAL PRESS. (PSIA)	TOTAL TEMP. (DEG.R.)	STATIC PRESS. (PSIA)	STATIC TEMP. (DEG.R.)
TIP	9.407	17.750												
1	9.356	17.764	675.96	685.81	0.00	685.81	0.5408	0.00	9.72	0.139	35.272	709.59	28.919	670.68
2	9.135	17.827	652.81	663.32	0.00	663.32	0.5260	0.00	10.21	0.123	35.320	699.53	29.262	663.12
3	8.905	17.892	632.58	643.84	0.00	643.84	0.5113	0.00	10.73	0.116	35.344	695.39	29.579	661.08
4	8.666	17.960	613.28	625.32	0.00	625.32	0.4974	0.00	11.26	0.111	35.364	691.31	29.873	658.93
5	8.416	18.031	594.25	607.07	0.00	607.07	0.4832	0.00	11.80	0.107	35.374	688.45	30.158	657.94
6	8.152	18.105	574.74	588.35	0.00	588.35	0.4681	0.00	12.35	0.104	35.357	687.25	30.436	658.59
7	7.873	18.184	553.75	568.12	0.00	568.12	0.4516	0.00	12.91	0.101	35.305	686.42	30.698	659.67
8	7.575	18.269	531.04	546.15	0.00	546.15	0.4337	0.00	13.51	0.099	35.231	685.82	30.963	661.10
9	7.253	18.360	505.05	520.85	0.00	520.85	0.4131	0.00	14.15	0.097	35.111	685.32	31.224	662.84
10	6.897	18.461	468.96	485.18	0.00	485.18	0.3833	0.00	14.86	0.095	34.840	687.54	31.484	668.04
11	6.480	18.579	409.37	425.25	0.00	425.25	0.3331	0.00	15.70	0.082	34.217	694.91	31.690	679.93
HUB	6.406	18.600												

TABLE III. - Continued.

** VALUES OF PARAMETERS ON STREAMLINES AT STATION, 23, WHICH IS AN ANNULUS **

STREAMLINE NO.	RADIUS (IN.)	AXIAL COORD. (IN.)	AXIAL VEL. (FT/SEC)	MERD. VEL. (FT/SEC)	TANG. VEL. (FT/SEC)	ABS. VEL. (FT/SEC)	ABS. MACH NO.	ABS.FLOW ANGLE (DEG)	STREAM. SLOPE (DEG)	STREAM. CURV. (1./IN.)	TOTAL PRESS. (PSIA)	TOTAL TEMP. (DEG.R.)	STATIC PRESS. (PSIA)	STATIC TEMP. (DEG.R.)
TIP	9.572	18.500												
1	9.523	18.519	656.81	680.01	0.00	680.01	0.5360	0.00	15.01	0.100	35.272	709.37	29.017	671.13
2	9.312	18.601	637.31	661.37	0.00	661.37	0.5244	0.00	15.50	0.116	35.320	699.49	29.295	663.29
3	9.094	18.686	617.91	642.77	0.00	642.77	0.5104	0.00	15.99	0.115	35.344	695.39	29.597	661.19
4	8.867	18.774	598.76	624.43	0.00	624.43	0.4966	0.00	16.48	0.113	35.364	691.33	29.887	659.04
5	8.630	18.867	579.54	606.04	0.00	606.04	0.4824	0.00	17.01	0.111	35.374	688.48	30.175	658.07
6	8.381	18.963	559.65	587.02	0.00	587.02	0.4670	0.00	17.56	0.108	35.357	687.28	30.457	658.75
7	8.118	19.066	538.18	566.44	0.00	566.44	0.4502	0.00	18.18	0.106	35.305	686.45	30.724	659.86
8	7.837	19.175	514.89	544.11	0.00	544.11	0.4320	0.00	18.86	0.105	35.231	685.86	30.993	661.32
9	7.535	19.293	488.14	518.32	0.00	518.32	0.4110	0.00	19.65	0.104	35.111	685.35	31.260	663.09
10	7.202	19.422	451.09	481.82	0.00	481.82	0.3806	0.00	20.57	0.104	34.840	687.57	31.529	668.33
11	6.813	19.574	388.68	418.31	0.00	418.31	0.3275	0.00	21.69	0.114	34.217	694.87	31.769	680.38
HUB	6.745	19.600												

** VALUES OF PARAMETERS ON STREAMLINES AT STATION, 24, WHICH IS AN ANNULUS **

STREAMLINE NO.	RADIUS (IN.)	AXIAL COORD. (IN.)	AXIAL VEL. (FT/SEC)	MERD. VEL. (FT/SEC)	TANG. VEL. (FT/SEC)	ABS. VEL. (FT/SEC)	ABS. MACH NO.	ABS.FLOW ANGLE (DEG)	STREAM. SLOPE (DEG)	STREAM. CURV. (1./IN.)	TOTAL PRESS. (PSIA)	TOTAL TEMP. (DEG.R.)	STATIC PRESS. (PSIA)	STATIC TEMP. (DEG.R.)
TIP	9.812	19.250												
1	9.766	19.274	630.31	675.94	0.00	675.94	0.5327	0.00	21.17	0.166	35.272	709.15	29.085	671.36
2	9.569	19.376	606.45	651.24	0.00	651.24	0.5159	0.00	21.37	0.130	35.320	699.45	29.466	664.35
3	9.364	19.483	587.01	631.36	0.00	631.36	0.5009	0.00	21.60	0.118	35.344	695.38	29.787	662.39
4	9.151	19.594	569.01	613.25	0.00	613.25	0.4873	0.00	21.90	0.109	35.364	691.34	30.071	660.21
5	8.930	19.709	551.68	596.17	0.00	596.17	0.4741	0.00	22.27	0.102	35.374	688.52	30.334	659.09
6	8.696	19.830	534.08	579.18	0.00	579.18	0.4605	0.00	22.76	0.096	35.357	687.32	30.577	659.52
7	8.455	19.956	515.07	561.16	0.00	561.16	0.4459	0.00	23.39	0.093	35.305	686.49	30.805	660.39
8	8.197	20.090	494.23	541.77	0.00	541.77	0.4301	0.00	24.18	0.090	35.231	685.89	31.028	661.57
9	7.923	20.233	469.81	519.22	0.00	519.22	0.4117	0.00	25.20	0.090	35.111	685.39	31.247	663.05
10	7.623	20.389	435.03	486.19	0.00	486.19	0.3841	0.00	26.52	0.090	34.840	687.59	31.471	668.01
11	7.280	20.564	375.86	427.23	0.00	427.23	0.3347	0.00	28.39	0.098	34.217	694.82	31.667	679.70
HUB	7.219	20.600												

TABLE III. - Continued.

** VALUES OF PARAMETERS ON STREAMLINES AT STATION, 25, WHICH IS AN ANNULUS **

STREAMLINE NO.	RADIUS (IN.)	AXIAL COORD. (IN.)	AXIAL VEL. (FT/SEC)	MERD. VEL. (FT/SEC)	TANG. VEL. (FT/SEC)	ABS. VEL. (FT/SEC)	ABS. MACH NO.	ABS.FLOW ANGLE (DEG)	STREAM. SLOPE (DEG)	STREAM. CURV. (1./IN.)	TOTAL PRESS. (PSIA)	TOTAL TEMP. (DEG.R.)	STATIC PRESS. (PSIA)	STATIC TEMP. (DEG.R.)
TIP	10.149	20.000												
1	10.106	20.027	550.60	616.31	0.00	616.31	0.4835	0.00	26.70	0.073	35.272	708.94	30.068	677.52
2	9.913	20.148	541.64	603.65	0.00	603.65	0.4765	0.00	26.20	0.065	35.320	699.40	30.244	669.25
3	9.714	20.273	533.26	592.91	0.00	592.91	0.4690	0.00	25.92	0.060	35.344	695.37	30.408	66[illegible].28
4	9.509	20.401	524.87	583.18	0.00	583.18	0.4624	0.00	25.84	0.055	35.364	691.36	30.548	663.19
5	9.298	20.533	516.11	574.00	0.00	574.00	0.4558	0.00	25.95	0.051	35.374	688.55	30.681	661.25
6	9.080	20.670	506.28	564.63	0.00	564.63	0.4484	0.00	26.28	0.048	35.357	687.35	30.803	660.93
7	8.854	20.812	494.53	554.19	0.00	554.19	0.4401	0.00	26.83	0.046	35.305	686.52	30.912	661.07
8	8.619	20.960	480.62	542.53	0.00	542.53	0.4307	0.00	27.64	0.044	35.231	685.93	31.017	661.54
9	8.371	21.115	462.96	528.11	0.00	528.11	0.4190	0.00	28.76	0.043	35.111	685.43	31.120	662.32
10	8.107	21.281	435.16	503.97	0.00	503.97	0.3986	0.00	30.29	0.043	34.840	687.61	31.230	666.57
11	7.813	21.465	385.42	457.10	0.00	457.10	0.3586	0.00	32.52	0.043	34.217	694.77	31.309	677.46
HUB	7.758	21.500												

TABLE III. - Continued.

** BLADE SECTION PROPERTIES OF STATOR NO. 1 FOLLOWING ROTOR NO. 1 **

NUMBER OF BLADES = 34.0 AXIAL LOCATION OF STACKING LINE IN COMPRESSOR = 5.200 IN.

BLADE NO.	SECTION RAD. LOC. (IN.)	STACKING POINT COORDINATES L (IN.)	STACKING POINT COORDINATES H (IN.)	SECTION SETTING ANGLE (DEG.)	BLADE SECTION C.G. COORDINATES L (IN.)	BLADE SECTION C.G. COORDINATES H (IN.)	SECTION AREA (IN.)**2	MOMENTS OF INERTIA THROUGH C.G. IMIN (IN.)**4	MOMENTS OF INERTIA THROUGH C.G. IMAX (IN.)**4	IMAX SETTING ANGLE (DEG.)	SECTION TORSION CONSTANT (IN.)**4	SECTION TWIST STIFFNESS (IN.)**6
1	9.600	1.1351	0.2300	10.353	1.1351	0.2300	0.32689	0.0023894	0.108937	10.368	0.0025425	0.0373760
2	9.025	1.1349	0.1886	11.005	1.1349	0.1886	0.31055	0.0016169	0.101371	11.006	0.0022598	0.0345303
3	8.450	1.1346	0.1836	12.136	1.1346	0.1836	0.29861	0.0014601	0.096598	12.146	0.0020317	0.0328279
4	7.875	1.1342	0.1837	13.130	1.1342	0.1837	0.28709	0.0013711	0.092087	13.156	0.0018222	0.0312301

SECTION NO. 1 COORDINATES L (IN.)	HP (IN.)	HS (IN.)	SECTION NO. 2 COORDINATES L (IN.)	HP (IN.)	HS (IN.)	SECTION NO. 3 COORDINATES L (IN.)	HP (IN.)	HS (IN.)	SECTION NO. 4 COORDINATES L (IN.)	HP (IN.)	HS (IN.)
0.0000	0.0297	0.0297	0.0000	0.0273	0.0273	0.0000	0.0251	0.0251	0.0000	0.0229	0.0229
0.0133	*******	0.0545	0.0143	*******	0.0513	0.0134	*******	0.0473	0.0122	*******	0.0432
0.0406	0.0021	*******	0.0350	0.0011	*******	0.0320	0.0010	*******	0.0293	0.0009	*******
0.1000	0.0249	0.1092	0.1000	0.0193	0.0952	0.1000	0.0194	0.0906	0.1000	0.0202	0.0871
0.2000	0.0599	0.1647	0.2000	0.0449	0.1410	0.2000	0.0442	0.1353	0.2000	0.0453	0.1319
0.3000	0.0909	0.2130	0.3000	0.0678	0.1812	0.3000	0.0664	0.1747	0.3000	0.0677	0.1713
0.4000	0.1182	0.2548	0.4000	0.0880	0.2163	0.4000	0.0859	0.2090	0.4000	0.0875	0.2057
0.5000	0.1417	0.2904	0.5000	0.1056	0.2465	0.5000	0.1030	0.2386	0.5000	0.1048	0.2353
0.6000	0.1616	0.3204	0.6000	0.1205	0.2719	0.6000	0.1175	0.2635	0.6000	0.1195	0.2603
0.7000	0.1783	0.3448	0.7000	0.1328	0.2927	0.7000	0.1294	0.2839	0.7000	0.1316	0.2808
0.8000	0.1907	0.3638	0.8000	0.1426	0.3092	0.8000	0.1389	0.3000	0.8000	0.1413	0.2969
0.9000	0.2008	0.3782	0.9000	0.1498	0.3212	0.9000	0.1460	0.3119	0.9000	0.1484	0.3089
1.0000	0.2070	0.3873	1.0000	0.1545	0.3290	1.0000	0.1505	0.3195	1.0000	0.1531	0.3166
1.1000	0.2099	0.3915	1.1000	0.1566	0.3326	1.1000	0.1526	0.3230	1.1000	0.1553	0.3201
1.2000	0.2095	0.3909	1.2000	0.1562	0.3319	1.2000	0.1523	0.3224	1.2000	0.1550	0.3195
1.3000	0.2057	0.3853	1.3000	0.1533	0.3271	1.3000	0.1495	0.3177	1.3000	0.1522	0.3148
1.4000	0.1985	0.3748	1.4000	0.1479	0.3180	1.4000	0.1443	0.3088	1.4000	0.1470	0.3059
1.5000	0.1879	0.3593	1.5000	0.1399	0.3046	1.5000	0.1365	0.2957	1.5000	0.1392	0.2928
1.6000	0.1740	0.3386	1.6000	0.1294	0.2869	1.6000	0.1264	0.2783	1.6000	0.1289	0.2754
1.7000	0.1565	0.3125	1.7000	0.1163	0.2647	1.7000	0.1137	0.2565	1.7000	0.1161	0.2536
1.8000	0.1354	0.2808	1.8000	0.1006	0.2379	1.8000	0.0984	0.2303	1.8000	0.1006	0.2273
1.9000	0.1107	0.2433	1.9000	0.0823	0.2063	1.9000	0.0806	0.1993	1.9000	0.0826	0.1963
2.0000	0.0823	0.1995	2.0000	0.0613	0.1697	2.0000	0.0603	0.1635	2.0000	0.0620	0.1603
2.1000	0.0500	0.1489	2.1000	0.0376	0.1279	2.1000	0.0373	0.1225	2.1000	0.0386	0.1192
2.2000	0.0137	0.0909	2.2000	0.0111	0.0804	2.2000	0.0116	0.0760	2.2000	0.0125	0.0725
2.2299	0.002	*******	2.2354	0.0011	*******	2.2385	0.0009	*******	2.2413	0.0009	*******
2.2572	*******	.0541	2.2560	*******	0.0512	2.2570	*******	0.0470	2.2583	*******	0.0426
2.2703	0.0295	0.0295	2.2703	0.0272	0.0272	2.2703	0.0249	0.0249	2.2703	0.0227	0.0227

TABLE III. - Continued.

** BLADE SECTION PROPERTIES OF STATOR NO. 1 FOLLOWING ROTOR NO. 1 **

NUMBER OF BLADES = 34.0 AXIAL LOCATION OF STACKING LINE IN COMPRESSOR = 5.200 IN.

BLADE NO.	SECTION RAD. LOC. (IN.)	STACKING POINT COORDINATES L (IN.)	STACKING POINT COORDINATES H (IN.)	SECTION SETTING ANGLE (DEG.)	BLADE SECTION C.G. COORDINATES L (IN.)	BLADE SECTION C.G. COORDINATES H (IN.)	SECTION AREA (IN.)**2	MOMENTS OF INERTIA THROUGH C.G. IMIN (IN.)**4	MOMENTS OF INERTIA THROUGH C.G. IMAX (IN.)**4	IMAX SETTING ANGLE (DEG.)	SECTION TORSION CONSTANT (IN.)**4	SECTION TWIST STIFFNESS (IN.)**6
5	7.300	1.1338	0.1878	14.229	1.1338	0.1878	0.27590	0.0013310	0.087776	14.274	0.0016300	0.0297061
6	6.725	1.1332	0.1946	15.152	1.1332	0.1946	0.26489	0.0013171	0.083560	15.219	0.0014535	0.0282116
7	6.150	1.1323	0.2033	16.060	1.1323	0.2033	0.25398	0.0013180	0.079376	16.183	0.0012911	0.0267140
8	5.575	1.1311	0.2212	16.529	1.1311	0.2212	0.24370	0.0014151	0.075536	16.743	0.0011448	0.0253396

SECTION NO. 5 COORDINATES

L (IN.)	HP (IN.)	HS (IN.)
0.0000	0.0208	0.0208
0.0108	*******	0.0390
0.0268	0.0009	*******
0.1000	0.0219	0.0847
0.2000	0.0481	0.1304
0.3000	0.0715	0.1707
0.4000	0.0923	0.2058
0.5000	0.1103	0.2360
0.6000	0.1257	0.2615
0.7000	0.1385	0.2825
0.8000	0.1486	0.2990
0.9000	0.1562	0.3112
1.0000	0.1611	0.3191
1.1000	0.1635	0.3227
1.2000	0.1632	0.3222
1.3000	0.1604	0.3174
1.4000	0.1549	0.3083
1.5000	0.1468	0.2950
1.6000	0.1360	0.2773
1.7000	0.1226	0.2550
1.8000	0.1065	0.2282
1.9000	0.0876	0.1964
2.0000	0.0659	0.1597
2.1000	0.0413	0.1175
2.2000	0.0139	0.0697
2.2439	0.0009	*******
2.2596	*******	0.0382
2.2732	0.0204	0.0204

SECTION NO. 6 COORDINATES

L (IN.)	HP (IN.)	HS (IN.)
0.0000	0.0186	0.0186
0.0094	*******	0.0348
0.0243	0.0009	*******
0.1000	0.0240	0.0829
0.2000	0.0519	0.1302
0.3000	0.0769	0.1718
0.4000	0.0990	0.2081
0.5000	0.1182	0.2392
0.6000	0.1346	0.2655
0.7000	0.1482	0.2871
0.8000	0.1591	0.3041
0.9000	0.1671	0.3167
1.0000	0.1724	0.3248
1.1000	0.1749	0.3286
1.2000	0.1747	0.3281
1.3000	0.1717	0.3232
1.4000	0.1660	0.3139
1.5000	0.1574	0.3002
1.6000	0.1460	0.2820
1.7000	0.1317	0.2591
1.8000	0.1146	0.2314
1.9000	0.0944	0.1986
2.0000	0.0713	0.1606
2.1000	0.0450	0.1169
2.2000	0.0156	0.0672
2.2462	0.0009	*******
2.2608	*******	0.0338
2.2699	0.0181	0.0181

SECTION NO. 7 COORDINATES

L (IN.)	HP (IN.)	HS (IN.)
0.0000	0.0164	0.0164
0.0081	*******	0.0306
0.0218	0.0009	*******
0.1000	0.0264	0.0813
0.2000	0.0563	0.1305
0.3000	0.0830	0.1737
0.4000	0.1066	0.2113
0.5000	0.1272	0.2437
0.6000	0.1449	0.2710
0.7000	0.1595	0.2934
0.8000	0.1712	0.3111
0.9000	0.1799	0.3242
1.0000	0.1858	0.3327
1.1000	0.1886	0.3368
1.2000	0.1885	0.3363
1.3000	0.1855	0.3314
1.4000	0.1794	0.3219
1.5000	0.1704	0.3078
1.6000	0.1583	0.2890
1.7000	0.1430	0.2654
1.8000	0.1246	0.2367
1.9000	0.1030	0.2026
2.0000	0.0780	0.1630
2.1000	0.0496	0.1173
2.2000	0.0176	0.0651
2.2482	0.0009	*******
2.2617	*******	0.0294
2.2693	0.0158	0.0158

SECTION NO. 8 COORDINATES

L (IN.)	HP (IN.)	HS (IN.)
0.0000	0.0143	0.0143
0.0066	*******	0.0263
0.0195	0.0010	*******
0.1000	0.0306	0.0821
0.2000	0.0642	0.1351
0.3000	0.0944	0.1815
0.4000	0.1210	0.2219
0.5000	0.1443	0.2567
0.6000	0.1643	0.2859
0.7000	0.1809	0.3100
0.8000	0.1942	0.3291
0.9000	0.2042	0.3431
1.0000	0.2109	0.3524
1.1000	0.2143	0.3569
1.2000	0.2144	0.3566
1.3000	0.2112	0.3515
1.4000	0.2045	0.3416
1.5000	0.1945	0.3267
1.6000	0.1810	0.3068
1.7000	0.1639	0.2815
1.8000	0.1431	0.2507
1.9000	0.1185	0.2141
2.0000	0.0900	0.1711
2.1000	0.0575	0.1214
2.2000	0.0206	0.0641
2.2488	0.0010	*******
2.2614	*******	0.0248
2.2675	0.0135	0.0135

TABLE III. - Continued.

** BLADE SECTION PROPERTIES OF STATOR NO. 1 FOLLOWING ROTOR NO. 1 **

NUMBER OF BLADES = 34.0 AXIAL LOCATION OF STACKING LINE IN COMPRESSOR = 5.200 IN.

BLADE SECTION NO.	RAD. LOC. (IN.)	STACKING POINT COORDINATES L (IN.)	STACKING POINT COORDINATES H (IN.)	SECTION SETTING ANGLE (DEG.)	BLADE SECTION C.G. COORDINATES L (IN.)	BLADE SECTION C.G. COORDINATES H (IN.)	SECTION AREA (IN.)**2	MOMENTS OF INERTIA THROUGH C.G. IMIN (IN.)**4	MOMENTS OF INERTIA THROUGH C.G. IMAX (IN.)**4	IMAX SETTING ANGLE (DEG.)	SECTION TORSION CONSTANT (IN.)**4	SECTION TWIST STIFFNESS (IN.)**6
9	5.025	1.1294	0.2497	16.059	1.1294	0.2497	0.23474	0.0016344	0.072372	16.374	0.0010197	0.0242280
10	4.800	1.1283	0.2652	15.493	1.1283	0.2652	0.23147	0.0017726	0.071319	15.846	0.0009732	0.0238766
11	9.600	1.1351	0.2299	10.353	1.1351	0.2299	0.32688	0.0023886	0.108931	10.368	0.0025424	0.0373736

SECTION NO. 9 COORDINATES

L (IN.)	HP (IN.)	HS (IN.)
0.0000	0.0122	0.0122
0.0051	*******	0.0221
0.0173	0.0011	*******
0.1000	0.0372	0.0860
0.2000	0.0769	0.1452
0.3000	0.1124	0.1970
0.4000	0.1438	0.2418
0.5000	0.1711	0.2801
0.6000	0.1945	0.3124
0.7000	0.2140	0.3389
0.8000	0.2296	0.3599
0.9000	0.2414	0.3754
1.0000	0.2493	0.3857
1.1000	0.2534	0.3907
1.2000	0.2536	0.3905
1.3000	0.2500	0.3851
1.4000	0.2424	0.3744
1.5000	0.2307	0.3582
1.6000	0.2150	0.3364
1.7000	0.1950	0.3087
1.8000	0.1706	0.2747
1.9000	0.1416	0.2340
2.0000	0.1078	0.1860
2.1000	0.0689	0.1299
2.2000	0.0247	0.0646
2.2485	0.0012	*******
2.2603	*******	0.0203
2.2648	0.0113	0.0113

SECTION NO. 10 COORDINATES

L (IN.)	HP (IN.)	HS (IN.)
0.0000	0.0113	0.0113
0.0044	*******	0.0203
0.0164	0.0012	*******
0.1000	0.0408	0.0888
0.2000	0.0839	0.1516
0.3000	0.1223	0.2062
0.4000	0.1562	0.2533
0.5000	0.1858	0.2936
0.6000	0.2110	0.3275
0.7000	0.2319	0.3552
0.8000	0.2487	0.3771
0.9000	0.2614	0.3934
1.0000	0.2699	0.4041
1.1000	0.2743	0.4094
1.2000	0.2745	0.4093
1.3000	0.2706	0.4037
1.4000	0.2624	0.3925
1.5000	0.2500	0.3756
1.6000	0.2330	0.3528
1.7000	0.2115	0.3237
1.8000	0.1852	0.2881
1.9000	0.1538	0.2452
2.0000	0.1173	0.1946
2.1000	0.0751	0.1351
2.2000	0.0269	0.0656
2.2484	0.0012	*******
2.2599	*******	0.0185
2.2637	0.0104	0.0104

SECTION NO. 11 COORDINATES

L (IN.)	HP (IN.)	HS (IN.)
0.0000	0.0297	0.0297
0.0133	*******	0.0545
0.0405	0.0021	*******
0.1000	0.0248	0.1091
0.2000	0.0599	0.1647
0.3000	0.0909	0.2130
0.4000	0.1181	0.2547
0.5000	0.1416	0.2903
0.6000	0.1616	0.3203
0.7000	0.1782	0.3448
0.8000	0.1907	0.3637
0.9000	0.2008	0.3782
1.0000	0.2069	0.3872
1.1000	0.2098	0.3915
1.2000	0.2094	0.3908
1.3000	0.2056	0.3853
1.4000	0.1984	0.3748
1.5000	0.1879	0.3592
1.6000	0.1739	0.3385
1.7000	0.1564	0.3124
1.8000	0.1354	0.2808
1.9000	0.1107	0.2433
2.0000	0.0823	0.1995
2.1000	0.0500	0.1489
2.2000	0.0137	0.0909
2.2299	0.0021	*******
2.2572	*******	0.0541
2.2703	0.0295	0.0295

TABLE III. - Continued.

** BLADE SECTION COORDINATES OF STATOR NO. 1 FOLLOWING ROTOR NO. 1 IN THE TURBOMACHINE ORIENTATION **

FRACT. OF SURF.	SECTION 1 FOR XCUT OF 9.6000 IN. SUCTION SURFACE Z (IN.)	SUCTION SURFACE Y (IN.)	PRESSURE SURFACE Z (IN.)	PRESSURE SURFACE Y (IN.)	SECTION 2 FOR XCUT OF 9.0250 IN. SUCTION SURFACE Z (IN.)	SUCTION SURFACE Y (IN.)	PRESSURE SURFACE Z (IN.)	PRESSURE SURFACE Y (IN.)	SECTION 3 FOR XCUT OF 8.4500 IN. SUCTION SURFACE Z (IN.)	SUCTION SURFACE Y (IN.)	PRESSURE SURFACE Z (IN.)	PRESSURE SURFACE Y (IN.)
0.00	-1.0721	-0.3742	-1.0358	-0.4209	-1.0738	-0.3486	-1.0439	-0.3940	-1.0675	-0.3690	-1.0396	-0.4104
0.05	-0.9844	-0.2943	-0.9369	-0.3619	-0.9807	-0.2763	-0.9405	-0.3429	-0.9753	-0.2958	-0.9367	-0.3581
0.12	-0.8534	-0.1913	-0.7958	-0.2864	-0.8439	-0.1827	-0.7941	-0.2769	-0.8398	-0.2008	-0.7911	-0.2900
0.20	-0.6932	-0.0870	-0.6311	-0.2102	-0.6794	-0.0875	-0.6247	-0.2091	-0.6769	-0.1036	-0.6225	-0.2107
0.30	-0.4795	0.0217	-0.4207	-0.1258	-0.4633	0.0126	-0.4102	-0.1359	-0.4631	-0.0005	-0.4024	-0.1430
0.40	-0.2553	0.1043	-0.2073	-0.0661	-0.2438	0.0890	-0.1986	-0.0767	-0.2450	0.0796	-0.1984	-0.0799
0.50	-0.0240	0.1602	0.0083	-0.0186	-0.0177	0.1435	0.0154	-0.0294	-0.0201	0.1385	0.0153	-0.0283
0.60	0.2122	0.1888	0.2268	0.0127	0.2127	0.1757	0.2317	0.0059	0.2095	0.1756	0.2315	0.0118
0.70	0.4429	0.1897	0.4477	0.0279	0.4447	0.1853	0.4501	0.0293	0.4413	0.1905	0.4500	0.0401
0.80	0.6853	0.1429	0.6703	0.0265	0.6761	0.1721	0.6704	0.0406	0.6729	0.1831	0.6706	0.0567
0.88	0.8697	0.1218	0.8492	0.0132	0.8590	0.1455	0.8480	0.0408	0.8565	0.1612	0.8486	0.0613
0.95	1.0266	0.0720	1.0059	-0.0074	1.0163	0.1106	1.0041	0.0344	1.0148	0.1307	1.0053	0.0559
1.00	1.1354	0.0286	1.1179	-0.0274	1.1267	0.0792	1.1161	0.0260	1.1260	0.1024	1.1177	0.0535
END ELLIPSE PARAMETERS			L.E.	T.E.			L.E.	T.E.			L.E.	T.E.
END CIRCLE Z (IN.)			-1.0515	1.1237			-1.0564	1.1186			-1.0513	1.1193
END CIRCLE Y (IN.)			-0.3956	0.0015			-0.3697	0.0532			-0.3882	0.0784
END CIR. RAD (IN.)			0.0297	0.0295			0.0273	0.0272			0.0251	0.0249
ELLIPSE ECCENT.			0.0000	0.0000			0.0000	0.0000			0.0000	0.0000
MAJ. AXIS SLOPE (DEG)			37.85	-17.36			33.36	-11.29			34.00	-9.70
SURF. TANG. (DEG)			83.93	83.91			83.90	83.90			83.96	83.95

FRACT. OF SURF.	SECTION 4 FOR XCUT OF 7.8750 IN. SUCTION SURFACE Z (IN.)	SUCTION SURFACE Y (IN.)	PRESSURE SURFACE Z (IN.)	PRESSURE SURFACE Y (IN.)	SECTION 5 FOR XCUT OF 7.3000 IN. SUCTION SURFACE Z (IN.)	SUCTION SURFACE Y (IN.)	PRESSURE SURFACE Z (IN.)	PRESSURE SURFACE Y (IN.)	SECTION 6 FOR XCUT OF 6.7250 IN. SUCTION SURFACE Z (IN.)	SUCTION SURFACE Y (IN.)	PRESSURE SURFACE Z (IN.)	PRESSURE SURFACE Y (IN.)
0.00	-1.0608	-0.3917	-1.0346	-0.4290	-1.0520	-0.4203	-1.0271	-0.4533	-1.0429	-0.4480	-1.0197	-0.4768
0.05	-0.9701	-0.3169	-0.9328	-0.3746	-0.9635	-0.3431	-0.9271	-0.3957	-0.9571	-0.3682	-0.9217	-0.4159
0.12	-0.8366	-0.2196	-0.7885	-0.3036	-0.8330	-0.2421	-0.7851	-0.3204	-0.8298	-0.2635	-0.7823	-0.3362
0.20	-0.6757	-0.1195	-0.6214	-0.2298	-0.6750	-0.1378	-0.6202	-0.2419	-0.6749	-0.1549	-0.6198	-0.2529
0.30	-0.4644	-0.0126	-0.4100	-0.1489	-0.4666	-0.0256	-0.4110	-0.1554	-0.4695	-0.0375	-0.4130	-0.1609
0.40	-0.2473	0.0718	-0.1994	-0.0814	-0.2507	0.0643	-0.2011	-0.0825	-0.2543	0.0579	-0.2036	-0.0826
0.50	-0.0229	0.1351	0.0142	-0.0256	-0.0266	0.1327	0.0123	-0.0218	-0.0302	0.1310	0.0098	-0.0175
0.60	0.2066	0.1764	0.2305	0.0184	0.2032	0.1786	0.2289	0.0265	0.2003	0.1808	0.2269	0.0344
0.70	0.4387	0.1954	0.4494	0.0505	0.4361	0.2016	0.4484	0.0623	0.4344	0.2067	0.4474	0.0728
0.80	0.6711	0.1919	0.6707	0.0706	0.6697	0.2014	0.6706	0.0353	0.6693	0.2085	0.6708	0.0975
0.88	0.8555	0.1729	0.8494	0.0778	0.8551	0.1845	0.8502	0.0943	0.8560	0.1924	0.8514	0.1071
0.95	1.0147	0.1447	1.0067	0.0775	1.0153	0.1577	1.0084	0.0951	1.0172	0.1657	1.0106	0.1078
1.00	1.1267	0.1180	1.1197	0.0735	1.1281	0.1317	1.1220	0.0916	1.1305	0.1395	1.1250	0.1039
END ELLIPSE PARAMETERS			L.E.	T.E.			L.E.	T.E.			L.E.	T.E.
END CIRCLE Z (IN.)			-1.0457	1.1208			-1.0378	1.1229			-1.0298	1.1259
END CIRCLE Y (IN.)			-0.4090	0.0961			-0.4355	0.1120			-0.4612	0.1220
END CIR. RAD (IN.)			0.0229	0.0227			0.0208	0.0204			0.0186	0.0181
ELLIPSE ECCENT.			0.0000	0.0000			0.0000	0.0000			0.0000	0.0000
MAJ. AXIS SLOPE (DEG)			35.18	-8.95			36.99	-8.64			38.91	-8.85
SURF. TANG. (DEG)			84.03	84.02			84.10	84.10			84.17	84.18

TABLE III. - Continued.

** BLADE SECTION COORDINATES OF STATOR NO. 1 FOLLOWING ROTOR NO. 1 IN THE TURBOMACHINE ORIENTATION **

FRACT. OF SURF.	SECTION 7 FOR XCUT OF 6.1500 IN. SUCTION SURFACE Z (IN.)	SUCTION SURFACE Y (IN.)	PRESSURE SURFACE Z (IN.)	PRESSURE SURFACE Y (IN.)
0.00	-1.0326	-0.4770	-1.0112	-0.5017
0.05	-0.9496	-0.3946	-0.9155	-0.4375
0.12	-0.8260	-0.2861	-0.7790	-0.3531
0.20	-0.6746	-0.1730	-0.6193	-0.2648
0.30	-0.4723	-0.0499	-0.4151	-0.1668
0.40	-0.2532	0.0513	-0.2065	-0.0829
0.50	-0.0341	0.1294	0.0059	-0.0130
0.60	0.1971	0.1834	0.2245	0.0427
0.70	0.4325	0.2123	0.4460	0.0838
0.80	0.6691	0.2156	0.6708	0.1097
0.88	0.8572	0.1998	0.8527	0.1193
0.95	1.0194	0.1724	1.0131	0.1192
1.00	1.1334	0.1453	1.1283	0.1142

END ELLIPSE PARAMETERS	L.E.	T.E.
END CIRCLE Z (IN.)	-1.0206	1.1293
END CIRCLE Y (IN.)	-0.4883	0.1300
END CIR. RAD (IN.)	0.0164	0.0158
ELLIPSE ECCENT.	0.0000	0.0000
MAJ. AXIS SLOPE (DEG)	40.96	-9.35
SURF. TANG. (DEG)	84.24	84.26

SECTION 8 FOR XCUT OF 5.5750 IN. SUCTION SURFACE Z (IN.)	SUCTION SURFACE Y (IN.)	PRESSURE SURFACE Z (IN.)	PRESSURE SURFACE Y (IN.)
-1.0226	-0.5068	-1.0030	-0.5274
-0.9434	-0.4211	-0.9106	-0.4590
-0.8244	-0.3079	-0.7779	-0.3691
-0.6773	-0.1896	-0.6220	-0.2749
-0.4782	-0.0598	-0.4206	-0.1702
-0.2644	0.0476	-0.2123	-0.0804
-0.0391	0.1303	0.0018	-0.0063
0.1943	0.1868	0.2209	0.0515
0.4324	0.2159	0.4445	0.0925
0.6718	0.2168	0.6718	0.1159
0.8618	0.1970	0.8558	0.1215
1.0252	0.1648	1.0180	0.1164
1.1395	0.1333	1.1342	0.1069

	L.E.	T.E.
	-1.0118	1.1356
	-0.5161	0.1203
	0.0143	0.0135
	0.0000	0.0000
	43.52	-11.36
	84.32	84.37

SECTION 9 FOR XCUT OF 5.0250 IN. SUCTION SURFACE Z (IN.)	SUCTION SURFACE Y (IN.)	PRESSURE SURFACE Z (IN.)	PRESSURE SURFACE Y (IN.)
-1.0175	-0.5298	-0.9999	-0.5465
-0.9426	-0.4406	-0.9112	-0.4737
-0.8285	-0.3226	-0.7830	-0.3781
-0.6858	-0.1991	-0.6310	-0.2783
-0.4885	-0.0629	-0.4313	-0.1673
-0.2730	0.0495	-0.2220	-0.0730
-0.0444	0.1344	-0.0055	0.0027
0.1935	0.1896	0.2170	0.0590
0.4364	0.2138	0.4445	0.0949
0.6799	0.2057	0.6758	0.1096
0.8721	0.1759	0.8626	0.1053
1.0362	0.1328	1.0268	0.0893
1.1502	0.0924	1.1442	0.0707

	L.E.	T.E.
	-1.0079	1.1462
	-0.5373	0.0819
	0.0122	0.0113
	0.0000	0.0000
	46.30	-15.54
	84.42	84.50

FRACT. OF SURF.	SECTION 10 FOR XCUT OF 4.8000 IN. SUCTION SURFACE Z (IN.)	SUCTION SURFACE Y (IN.)	PRESSURE SURFACE Z (IN.)	PRESSURE SURFACE Y (IN.)
0.00	-1.0176	-0.5362	-1.0010	-0.5514
0.05	-0.9446	-0.4455	-0.9140	-0.4767
0.12	-0.8326	-0.3255	-0.7876	-0.3788
0.20	-0.6916	-0.2002	-0.6373	-0.2768
0.30	-0.4944	-0.0615	-0.4379	-0.1635
0.40	-0.2774	0.0525	-0.2274	-0.0630
0.50	-0.0465	0.1372	-0.0093	0.0073
0.60	0.1940	0.1904	0.2154	0.0614
0.70	0.4396	0.2105	0.4451	0.0934
0.80	0.6853	0.1963	0.6786	0.1022
0.88	0.8785	0.1600	0.8669	0.0916
0.95	1.0428	0.1102	1.0321	0.0689
1.00	1.1564	0.0646	1.1499	0.0449

END ELLIPSE PARAMETERS	L.E.	T.E.
END CIRCLE Z (IN.)	-1.0086	1.1522
END CIRCLE Y (IN.)	-0.5430	0.0550
END CIR. RAD (IN.)	0.0113	0.0104
ELLIPSE ECCENT.	0.0000	0.0000
MAJ. AXIS SLOPE (DEG)	47.43	-18.24
SURF. TANG. (DEG)	84.47	84.56

SECTION 11 FOR XCUT OF 9.5997 IN. SUCTION SURFACE Z (IN.)	SUCTION SURFACE Y (IN.)	PRESSURE SURFACE Z (IN.)	PRESSURE SURFACE Y (IN.)
-1.0721	-0.3742	-1.0358	-0.4208
-0.9844	-0.2942	-0.9370	-0.3618
-0.8534	-0.1912	-0.7958	-0.2864
-0.6932	-0.0870	-0.6311	-0.2102
-0.4795	0.0217	-0.4207	-0.1298
-0.2553	0.1043	-0.2073	-0.0661
-0.0240	0.1602	0.0083	-0.0187
0.2122	0.1888	0.2268	0.0127
0.4499	0.1897	0.4477	0.0279
0.6853	0.1629	0.6703	0.0265
0.8697	0.1218	0.8492	0.0133
1.0266	0.0720	1.0059	-0.0074
1.1354	0.0287	1.1179	-0.0274

	L.E.	T.E.
	-1.0515	1.1237
	-0.3956	0.0016
	0.0297	0.0295
	0.0000	0.0000
	37.84	-17.36
	83.93	83.91

TABLE III. - Continued.

** BLADE SECTION PROPERTIES OF ROTOR NO. 2 **

NUMBER OF BLADES = 38.0 AXIAL LOCATION OF STACKING LINE IN COMPRESSOR = 9.200 IN.

BLADE SECTION NO.	RAD. LOC. (IN.)	STACKING POINT COORDINATES L (IN.)	STACKING POINT COORDINATES H (IN.)	SECTION SETTING ANGLE (DEG.)	BLADE SECTION C.G. COORDINATES L (IN.)	BLADE SECTION C.G. COORDINATES H (IN.)	SECTION AREA (IN.)**2	MOMENTS OF INERTIA THROUGH C.G. IMIN (IN.)**4	MOMENTS OF INERTIA THROUGH C.G. IMAX (IN.)**4	IMAX SETTING ANGLE (DEG.)	SECTION TORSION CONSTANT (IN.)**4	SECTION TWIST STIFFNESS (IN.)**6
1	9.525	0.9941	-0.0127	60.218	1.0056	0.0291	0.10671	0.0000337	0.027616	60.303	0.0001190	0.0074213
2	9.375	0.9960	-0.0120	59.895	1.0069	0.0284	0.10803	0.0000339	0.028379	59.946	0.0001217	0.0076849
3	9.000	0.9996	-0.0067	58.493	1.0086	0.0301	0.11477	0.0000397	0.030789	58.483	0.0001428	0.0084126
4	8.625	1.0028	0.0016	56.545	1.0097	0.0348	0.12597	0.0000534	0.033954	56.500	0.0001879	0.0092866

SECTION NO. 1 COORDINATES

L (IN.)	HP (IN.)	HS (IN.)
0.0000	0.0118	0.0118
0.0107	*******	0.0235
0.0118	0.0000	*******
0.1000	-0.0001	0.0312
0.2000	-0.0001	0.0389
0.3000	-0.0001	0.0457
0.4000	-0.0001	0.0516
0.5000	-0.0001	0.0566
0.6000	-0.0001	0.0608
0.7000	0.0000	0.0641
0.8000	0.0002	0.0666
0.9000	0.0003	0.0682
1.0000	0.0006	0.0690
1.1000	0.0009	0.0689
1.2000	0.0012	0.0680
1.3000	0.0016	0.0662
1.4000	0.0021	0.0635
1.5000	0.0024	0.0597
1.6000	0.0024	0.0548
1.7000	0.0022	0.0487
1.8000	0.0018	0.0414
1.9000	0.0011	0.0328
2.0000	0.0000	0.0223
2.0036	0.0000	*******
2.0053	*******	0.0223
2.0151	0.0112	0.0112

SECTION NO. 2 COORDINATES

L (IN.)	HP (IN.)	HS (IN.)
0.0000	0.0125	0.0125
0.0114	*******	0.0249
0.0125	0.0000	*******
0.1000	-0.0001	0.0323
0.2000	-0.0003	0.0397
0.3000	-0.0004	0.0462
0.4000	-0.0006	0.0519
0.5000	-0.0007	0.0566
0.6000	-0.0008	0.0606
0.7000	-0.0008	0.0636
0.8000	-0.0008	0.0659
0.9000	-0.0007	0.0673
1.0000	-0.0006	0.0680
1.1000	-0.0004	0.0678
1.2000	-0.0001	0.0668
1.3000	0.0003	0.0651
1.4000	0.0007	0.0624
1.5000	0.0010	0.0588
1.6000	0.0012	0.0542
1.7000	0.0012	0.0484
1.8000	0.0010	0.0416
1.9000	0.0006	0.0337
2.0000	0.0001	0.0246
2.0073	0.0000	*******
2.0090	*******	0.0238
2.0195	0.0119	0.0119

SECTION NO. 3 COORDINATES

L (IN.)	HP (IN.)	HS (IN.)
0.0000	0.0142	0.0142
0.0129	*******	0.0283
0.0142	0.0000	*******
0.1000	0.0001	0.0358
0.2000	0.0002	0.0435
0.3000	0.0003	0.0502
0.4000	0.0003	0.0560
0.5000	0.0002	0.0608
0.6000	0.0001	0.0648
0.7000	0.0000	0.0678
0.8000	-0.0001	0.0699
0.9000	-0.0002	0.0712
1.0000	-0.0002	0.0716
1.1000	-0.0002	0.0712
1.2000	-0.0001	0.0700
1.3000	0.0002	0.0680
1.4000	0.0003	0.0651
1.5000	0.0004	0.0613
1.6000	0.0004	0.0565
1.7000	0.0003	0.0509
1.8000	0.0002	0.0443
1.9000	0.0001	0.0369
2.0000	0.0000	0.0285
2.0101	0.0000	*******
2.0118	*******	0.0275
2.0242	0.0138	0.0138

SECTION NO. 4 COORDINATES

L (IN.)	HP (IN.)	HS (IN.)
0.0000	0.0158	0.0158
0.0142	*******	0.0315
0.0160	0.0000	*******
0.1000	0.0007	0.0401
0.2000	0.0013	0.0489
0.3000	0.0018	0.0567
0.4000	0.0022	0.0633
0.5000	0.0024	0.0689
0.6000	0.0026	0.0733
0.7000	0.0026	0.0768
0.8000	0.0026	0.0792
0.9000	0.0025	0.0805
1.0000	0.0024	0.0809
1.1000	0.0023	0.0803
1.2000	0.0022	0.0788
1.3000	0.0021	0.0763
1.4000	0.0018	0.0729
1.5000	0.0016	0.0684
1.6000	0.0013	0.0630
1.7000	0.0009	0.0566
1.8000	0.0006	0.0494
1.9000	0.0003	0.0412
2.0000	0.0000	0.0322
2.0085	0.0000	*******
2.0104	*******	0.0312
2.0244	0.0157	0.0157

TABLE III. - Continued.

** BLADE SECTION PROPERTIES OF ROTOR NO. 2 **

NUMBER OF BLADES = 38.0 AXIAL LOCATION OF STACKING LINE IN COMPRESSOR = 9.200 IN.

BLADE SECTION NO.	RAD. LOC. (IN.)	STACKING POINT COORDINATES L (IN.)	STACKING POINT COORDINATES H (IN.)	SECTION SETTING ANGLE (DEG.)	BLADE SECTION C.G. COORDINATES L (IN.)	BLADE SECTION C.G. COORDINATES H (IN.)	SECTION AREA (IN.)**2	MOMENTS OF INERTIA THROUGH C.G. IMIN (IN.)**4	MOMENTS OF INERTIA THROUGH C.G. IMAX (IN.)**4	IMAX SETTING ANGLE (DEG.)	SECTION TORSION CONSTANT (IN.)**4	SECTION TWIST STIFFNESS (IN.)**6
5	8.250	1.0064	0.0107	54.329	1.0113	0.0402	0.14094	0.0000764	0.037866	54.257	0.0002638	0.0103431
6	7.875	1.0100	0.0219	51.846	1.0132	0.0476	0.15855	0.0001128	0.042303	51.749	0.0003779	0.0115261
7	7.500	1.0133	0.0359	49.029	1.0149	0.0578	0.17770	0.0001680	0.047056	48.939	0.0005354	0.0127829
8	7.125	1.0161	0.0536	45.830	1.0164	0.0716	0.19733	0.0002500	0.051918	45.763	0.0007364	0.0140622

SECTION NO. 5 COORDINATES L (IN.)	HP (IN.)	HS (IN.)	SECTION NO. 6 COORDINATES L (IN.)	HP (IN.)	HS (IN.)	SECTION NO. 7 COORDINATES L (IN.)	HP (IN.)	HS (IN.)	SECTION NO. 8 COORDINATES L (IN.)	HP (IN.)	HS (IN.)
0.0000	0.0174	0.0174	0.0000	0.0191	0.0191	0.0000	0.0207	0.0207	0.0000	0.0223	0.0223
0.0153	*******	0.0348	0.0163	*******	0.0379	0.0171	*******	0.0411	0.0177	*******	0.0441
0.0177	0.0000	*******	0.0195	0.0000	*******	0.0213	0.0000	*******	0.0234	0.0000	*******
0.1000	0.0012	0.0447	0.1000	0.0018	0.0497	0.1000	0.0028	0.0553	0.1000	0.0044	0.0615
0.2000	0.0024	0.0551	0.2000	0.0037	0.0623	0.2000	0.0059	0.0707	0.2000	0.0095	0.0806
0.3000	0.0033	0.0643	0.3000	0.0053	0.0734	0.3000	0.0086	0.0843	0.3000	0.0139	0.0974
0.4000	0.0040	0.0721	0.4000	0.0066	0.0829	0.4000	0.0108	0.0960	0.4000	0.0177	0.1119
0.5000	0.0045	0.0787	0.5000	0.0075	0.0908	0.5000	0.0126	0.1058	0.5000	0.0208	0.1241
0.6000	0.0049	0.0840	0.6000	0.0082	0.0972	0.6000	0.0139	0.1137	0.6000	0.0233	0.1341
0.7000	0.0050	0.0880	0.7000	0.0086	0.1021	0.7000	0.0149	0.1199	0.7000	0.0251	0.1419
0.8000	0.0050	0.0908	0.8000	0.0088	0.1056	0.8000	0.0154	0.1242	0.8000	0.0264	0.1474
0.9000	0.0049	0.0924	0.9000	0.0087	0.1075	0.9000	0.0156	0.1268	0.9000	0.0270	0.1508
1.0000	0.0047	0.0927	1.0000	0.0085	0.1080	1.0000	0.0154	0.1275	1.0000	0.0270	0.1520
1.1000	0.0044	0.0920	1.1000	0.0080	0.1071	1.1000	0.0149	0.1266	1.1000	0.0264	0.1510
1.2000	0.0040	0.0900	1.2000	0.0074	0.1048	1.2000	0.0141	0.1239	1.2000	0.0254	0.1479
1.3000	0.0036	0.0870	1.3000	0.0067	0.1011	1.3000	0.0130	0.1195	1.3000	0.0237	0.1427
1.4000	0.0031	0.0828	1.4000	0.0058	0.0961	1.4000	0.0116	0.1135	1.4000	0.0216	0.1353
1.5000	0.0025	0.0775	1.5000	0.0049	0.0898	1.5000	0.0101	0.1058	1.5000	0.0190	0.1259
1.6000	0.0019	0.0712	1.6000	0.0039	0.0822	1.6000	0.0083	0.0965	1.6000	0.0159	0.1143
1.7000	0.0014	0.0639	1.7000	0.0029	0.0734	1.7000	0.0064	0.0856	1.7000	0.0125	0.1007
1.8000	0.0009	0.0555	1.8000	0.0019	0.0633	1.8000	0.0043	0.0731	1.8000	0.0086	0.0850
1.9000	0.0004	0.0462	1.9000	0.0009	0.0521	1.9000	0.0022	0.0591	1.9000	0.0045	0.0672
2.0000	0.0000	0.0360	2.0000	0.0000	0.0397	2.0000	0.0001	0.0436	1.9992	0.0000	*******
2.0067	0.0000	*******	2.0047	0.0000	*******	2.0023	0.0000	*******	2.0051	*******	0.0463
2.0090	*******	0.0350	2.0076	*******	0.0387	2.0064	*******	0.0425	2.0237	0.0234	0.0234
2.0245	0.0176	0.0176	2.0244	0.0195	0.0195	2.0242	0.0214	0.0214			

TABLE III. - Continued.

** BLADE SECTION PROPERTIES OF ROTOR NO. 2 **

NUMBER OF BLADES = 38.0 AXIAL LOCATION OF STACKING LINE IN COMPRESSOR = 9.200 IN.

BLADE SECTION NO.	RAD. LOC. (IN.)	STACKING POINT COORDINATES L (IN.)	STACKING POINT COORDINATES H (IN.)	SECTION SETTING ANGLE (DEG.)	BLADE SECTION C.G. COORDINATES L (IN.)	BLADE SECTION C.G. COORDINATES H (IN.)	SECTION AREA (IN.)**2	MOMENTS OF INERTIA THROUGH C.G. IMIN (IN.)**4	MOMENTS OF INERTIA THROUGH C.G. IMAX (IN.)**4	IMAX SETTING ANGLE (DEG.)	SECTION TORSION CONSTANT (IN.)**4	SECTION TWIST STIFFNESS (IN.)**6
9	6.750	1.0186	0.0757	42.219	1.0179	0.0897	0.21639	0.0003706	0.056694	42.207	0.0009721	0.0153157
10	6.375	1.0202	0.1050	38.077	1.0190	0.1150	0.23403	0.0005596	0.061317	38.189	0.0012231	0.0165411
11	6.000	1.0198	0.1505	32.883	1.0186	0.1565	0.24858	0.0009290	0.065119	33.342	0.0014482	0.0174582
12	5.650	1.0170	0.2195	26.287	1.0163	0.2218	0.26089	0.0017578	0.069021	27.384	0.0016118	0.0183776

SECTION NO. 9 COORDINATES

L (IN.)	HP (IN.)	HS (IN.)
0.0000	0.0239	0.0239
0.0179	*******	0.0470
0.0258	0.0001	*******
0.1000	0.0066	0.0685
0.2000	0.0147	0.0921
0.3000	0.0218	0.1129
0.4000	0.0279	0.1309
0.5000	0.0331	0.1462
0.6000	0.0373	0.1587
0.7000	0.0406	0.1685
0.8000	0.0430	0.1757
0.9000	0.0443	0.1802
1.0000	0.0447	0.1820
1.1000	0.0442	0.1811
1.2000	0.0427	0.1776
1.3000	0.0404	0.1714
1.4000	0.0371	0.1625
1.5000	0.0330	0.1509
1.6000	0.0280	0.1365
1.7000	0.0221	0.1194
1.8000	0.0154	0.0995
1.9000	0.0079	0.0767
1.9948	0.0001	*******
2.0035	*******	0.0500
2.0223	0.0254	0.0254

SECTION NO. 10 COORDINATES

L (IN.)	HP (IN.)	HS (IN.)
0.0000	0.0255	0.0255
0.0177	*******	0.0498
0.0286	0.0002	*******
0.1000	0.0100	0.0766
0.2000	0.0225	0.1061
0.3000	0.0337	0.1321
0.4000	0.0436	0.1547
0.5000	0.0521	0.1740
0.6000	0.0591	0.1900
0.7000	0.0648	0.2027
0.8000	0.0689	0.2120
0.9000	0.0716	0.2181
1.0000	0.0728	0.2209
1.1000	0.0725	0.2204
1.2000	0.0707	0.2165
1.3000	0.0674	0.2092
1.4000	0.0625	0.1984
1.5000	0.0560	0.1841
1.6000	0.0479	0.1662
1.7000	0.0381	0.1444
1.8000	0.0266	0.1187
1.9000	0.0134	0.0888
1.9886	0.0003	*******
2.0016	*******	0.0538
2.0201	0.0277	0.0277

SECTION NO. 11 COORDINATES

L (IN.)	HP (IN.)	HS (IN.)
0.0000	0.0271	0.0271
0.0168	*******	0.0521
0.0324	0.0005	*******
0.1000	0.0155	0.0876
0.2000	0.0361	0.1261
0.3000	0.0547	0.1602
0.4000	0.0713	0.1899
0.5000	0.0858	0.2155
0.6000	0.0981	0.2369
0.7000	0.1081	0.2542
0.8000	0.1159	0.2673
0.9000	0.1213	0.2761
1.0000	0.1244	0.2808
1.1000	0.1249	0.2811
1.2000	0.1229	0.2770
1.3000	0.1181	0.2684
1.4000	0.1105	0.2550
1.5000	0.0999	0.2366
1.6000	0.0860	0.2128
1.7000	0.0686	0.1832
1.8000	0.0474	0.1472
1.9000	0.0220	0.1038
1.9719	0.0009	*******
1.9923	*******	0.0563
2.0089	0.0297	0.0297

SECTION NO. 12 COORDINATES

L (IN.)	HP (IN.)	HS (IN.)
0.0000	0.0285	0.0285
0.0146	*******	0.0534
0.0375	0.0014	*******
0.0500	0.0061	0.0747
0.1000	0.0242	0.1034
0.1500	0.0416	0.1305
0.2000	0.0583	0.1560
0.2500	0.0742	0.1800
0.3000	0.0893	0.2026
0.3500	0.1036	0.2236
0.4000	0.1171	0.2433
0.4500	0.1298	0.2616
0.5000	0.1416	0.2784
0.5500	0.1524	0.2939
0.6000	0.1623	0.3080
0.6500	0.1718	0.3209
0.7000	0.1802	0.3323
0.7500	0.1875	0.3423
0.8000	0.1939	0.3510
0.8500	0.1996	0.3583
0.9000	0.2042	0.3642
0.9500	0.2079	0.3687
1.0000	0.2106	0.3718
1.0500	0.2123	0.3735
1.1000	0.2129	0.3737
1.1500	0.2124	0.3725
1.2000	0.2108	0.3697
1.2500	0.2080	0.3654
1.3000	0.2040	0.3594
1.3500	0.1987	0.3518
1.4000	0.1920	0.3425
1.4500	0.1840	0.3313
1.5000	0.1745	0.3181
1.5500	0.1634	0.3029
1.6000	0.1506	0.2855
1.6500	0.1359	0.2657
1.7000	0.1194	0.2434
1.7500	0.1007	0.2182
1.8000	0.0797	0.1899
1.8500	0.0561	0.1581
1.9000	0.0297	0.1222
1.9500	-0.0007	0.0818
1.9454	0.0030	*******
1.9774	*******	0.0573
1.9905	0.0317	0.0317

TABLE III. - Continued.

** BLADE SECTION PROPERTIES OF ROTOR NO. 2 **

NUMBER OF BLADES = 38.0 AXIAL LOCATION OF STACKING LINE IN COMPRESSOR = 9.200 IN.

BLADE SECTION NO	RAD. LOC. (IN.)	STACKING POINT COORDINATES L (IN.)	STACKING POINT COORDINATES H (IN.)	SECTION SETTING ANGLE (DEG.)	BLADE SECTION C.G. COORDINATES L (IN.)	BLADE SECTION C.G. COORDINATES H (IN.)	SECTION AREA (IN.)**2	MOMENTS OF INERTIA THROUGH C.G. IMIN (IN.)***4	MOMENTS OF INERTIA THROUGH C.G. IMAX (IN.)***4	IMAX SETTING ANGLE (DEG.)	SECTION TORSION CONSTANT (IN.)***4	SECTION TWIST STIFFNESS (IN.)***6
13	5.450	1.0123	0.2762	21.417	1.0122	0.2764	0.27049	0.0027748	0.073227	22.873	0.0017010	0.0196352
14	5.225	1.0005	0.3592	14.736	1.0016	0.3573	0.28844	0.0050528	0.082636	16.080	0.0018448	0.0223002
15	5.427	1.0114	0.2837	20.793	1.0114	0.2837	0.27189	0.0029386	0.073905	22.275	0.0017126	0.0198383

SECTION NO. 13 COORDINATES

L (IN.)	HP (IN.)	HS (IN.)
0.0000	0.0293	0.0293
0.0126	*******	0.0535
0.0413	0.0025	*******
0.0500	0.0069	0.0814
0.1000	0.0315	0.1169
0.1500	0.0550	0.1504
0.2000	0.0775	0.1818
0.2500	0.0989	0.2112
0.3000	0.1193	0.2388
0.3500	0.1386	0.2646
0.4000	0.1567	0.2886
0.4500	0.1737	0.3108
0.5000	0.1896	0.3314
0.5500	0.2044	0.3503
0.6000	0.2179	0.3675
0.6500	0.2302	0.3831
0.7000	0.2415	0.3971
0.7500	0.2516	0.4094
0.8000	0.2605	0.4200
0.8500	0.2682	0.4291
0.9000	0.2746	0.4365
0.9500	0.2797	0.4422
1.0000	0.2836	0.4463
1.0500	0.2860	0.4487
1.1000	0.2871	0.4494
1.1500	0.2867	0.4483
1.2000	0.2848	0.4454
1.2500	0.2813	0.4407
1.3000	0.2762	0.4339
1.3500	0.2692	0.4252
1.4000	0.2605	0.4142
1.4500	0.2498	0.4010
1.5000	0.2369	0.3854
1.5500	0.2218	0.3671
1.6000	0.2043	0.3461
1.6500	0.1841	0.3219
1.7000	0.1609	0.2943
1.7500	0.1346	0.2628
1.8000	0.1045	0.2270
1.8500	0.0704	0.1861
1.9000	0.0315	0.1392
1.9500	-0.0138	0.0850
1.9299	0.0057	*******
1.9718	*******	0.0587
1.9826	0.0339	0.0339

SECTION NO. 14 COORDINATES

L (IN.)	HP (IN.)	HS (IN.)
0.0000	0.0302	0.0302
0.0099	*******	0.0526
0.0465	0.0047	*******
0.0500	0.0073	0.0927
0.1000	0.0425	0.1396
0.1500	0.0761	0.1832
0.2000	0.1080	0.2238
0.2500	0.1382	0.2616
0.3000	0.1668	0.2967
0.3500	0.1936	0.3294
0.4000	0.2188	0.3597
0.4500	0.2423	0.3875
0.5000	0.2641	0.4131
0.5500	0.2842	0.4367
0.6000	0.3028	0.4581
0.6500	0.3197	0.4773
0.7000	0.3350	0.4945
0.7500	0.3487	0.5096
0.8000	0.3607	0.5228
0.8500	0.3710	0.5339
0.9000	0.3796	0.5431
0.9500	0.3864	0.5502
1.0000	0.3915	0.5554
1.0500	0.3947	0.5584
1.1000	0.3959	0.5594
1.1500	0.3952	0.5583
1.2000	0.3924	0.5550
1.2500	0.3875	0.5493
1.3000	0.3803	0.5413
1.3500	0.3707	0.5308
1.4000	0.3585	0.5177
1.4500	0.3436	0.5017
1.5000	0.3258	0.4828
1.5500	0.3048	0.4606
1.6000	0.2804	0.4348
1.6500	0.2522	0.4051
1.7000	0.2197	0.3711
1.7500	0.1826	0.3321
1.8000	0.1402	0.2873
1.8500	0.0915	0.2358
1.9000	0.0357	0.1761
1.9500	-0.0290	0.1061
1.9203	0.0107	*******
1.9770	*******	0.0630
1.9856	0.0387	0.0387

SECTION NO. 15 COORDINATES

L (IN.)	HP (IN.)	HS (IN.)
0.0000	0.0294	0.0294
0.0124	*******	0.0534
0.0418	0.0027	*******
0.0500	0.0070	0.0824
0.1000	0.0325	0.1188
0.1500	0.0568	0.1531
0.2000	0.0791	0.1853
0.2500	0.1023	0.2155
0.3000	0.1234	0.2438
0.3500	0.1433	0.2702
0.4000	0.1621	0.2947
0.4500	0.1797	0.3175
0.5000	0.1961	0.3386
0.5500	0.2114	0.3579
0.6000	0.2254	0.3756
0.6500	0.2382	0.3915
0.7000	0.2498	0.4057
0.7500	0.2603	0.4183
0.8000	0.2695	0.4292
0.8500	0.2774	0.4385
0.9000	0.2840	0.4461
0.9500	0.2894	0.4520
1.0000	0.2933	0.4562
1.0500	0.2959	0.4587
1.1000	0.2970	0.4594
1.1500	0.2966	0.4584
1.2000	0.2946	0.4555
1.2500	0.2910	0.4506
1.3000	0.2857	0.4438
1.3500	0.2786	0.4348
1.4000	0.2695	0.4237
1.4500	0.2584	0.4102
1.5000	0.2452	0.3943
1.5500	0.2295	0.3757
1.6000	0.2114	0.3541
1.6500	0.1904	0.3294
1.7000	0.1664	0.3011
1.7500	0.1390	0.2689
1.8000	0.1078	0.2321
1.8500	0.0722	0.1901
1.9000	0.0317	0.1418
1.9500	-0.0157	0.0859
1.9284	0.0061	*******
1.9716	*******	0.0590
1.9821	0.0343	0.0343

TABLE III. - Continued.

** BLADE SECTION COORDINATES OF ROTOR NO. 2 IN THE TURBOMACHINE ORIENTATION **

FRACT. OF SURF.	SECTION 1 FOR XCUT OF 9.5250 IN. SUCTION SURFACE Z (IN.)	SUCTION SURFACE Y (IN.)	PRESSURE SURFACE Z (IN.)	PRESSURE SURFACE Y (IN.)	SECTION 2 FOR XCUT OF 9.3750 IN. SUCTION SURFACE Z (IN.)	SUCTION SURFACE Y (IN.)	PRESSURE SURFACE Z (IN.)	PRESSURE SURFACE Y (IN.)	SECTION 3 FOR XCUT OF 9.0000 IN. SUCTION SURFACE Z (IN.)	SUCTION SURFACE Y (IN.)	PRESSURE SURFACE Z (IN.)	PRESSURE SURFACE Y (IN.)
0.00	-0.5199	-0.8354	-0.4989	-0.8461	-0.5258	-0.8333	-0.5037	-0.8448	-0.5455	-0.8230	-0.5207	-0.8367
0.05	-0.4777	-0.7444	-0.4492	-0.7594	-0.4828	-0.7427	-0.4534	-0.7584	-0.5006	-0.7334	-0.4686	-0.7514
0.12	-0.4171	-0.6177	-0.3796	-0.6379	-0.4211	-0.6164	-0.3829	-0.6373	-0.4363	-0.6087	-0.3956	-0.6321
0.20	-0.3460	-0.4738	-0.3001	-0.4991	-0.3488	-0.4731	-0.3025	-0.4989	-0.3607	-0.4671	-0.3120	-0.4957
0.30	-0.2543	-0.2954	-0.2009	-0.3255	-0.2555	-0.2953	-0.2019	-0.3259	-0.2632	-0.2918	-0.2074	-0.3254
0.40	-0.1596	-0.1187	-0.1018	-0.1519	-0.1594	-0.1192	-0.1016	-0.1529	-0.1626	-0.1183	-0.1028	-0.1550
0.50	-0.0620	0.0562	-0.0030	0.0216	-0.0604	0.0552	-0.0015	0.0201	-0.0591	0.0534	0.0017	0.0153
0.60	0.0384	0.2292	0.0955	0.1950	0.0412	0.2277	0.0982	0.1931	0.0471	0.2232	0.1060	0.1857
0.70	0.1416	0.4000	0.1936	0.3681	0.1454	0.3983	0.1975	0.3660	0.1561	0.3910	0.2100	0.3560
0.80	0.2481	0.5683	0.2920	0.5407	0.2528	0.5664	0.2970	0.5384	0.2679	0.5566	0.3141	0.5260
0.88	0.3358	0.7006	0.3711	0.6780	0.3410	0.6990	0.3768	0.6758	0.3594	0.6874	0.3975	0.6618
0.95	0.4146	0.8147	0.4406	0.7975	0.4199	0.8134	0.4466	0.7956	0.4409	0.8006	0.4704	0.7804
1.00	0.4720	0.8951	0.4904	0.8826	0.4772	0.8943	0.4969	0.8809	0.4996	0.8808	0.5224	0.8650
L.E. CIRCLE CENTER			-0.5092	-0.8403			-0.5145	-0.8386			-0.5328	-0.8293
T.E. CIRCLE CENTER			0.4809	0.8884			0.4868	0.8871			0.5107	0.8724

FRACT. OF SURF.	SECTION 4 FOR XCUT OF 8.6250 IN. SUCTION SURFACE Z (IN.)	SUCTION SURFACE Y (IN.)	PRESSURE SURFACE Z (IN.)	PRESSURE SURFACE Y (IN.)	SECTION 5 FOR XCUT OF 8.2500 IN. SUCTION SURFACE Z (IN.)	SUCTION SURFACE Y (IN.)	PRESSURE SURFACE Z (IN.)	PRESSURE SURFACE Y (IN.)	SECTION 6 FOR XCUT OF 7.8750 IN. SUCTION SURFACE Z (IN.)	SUCTION SURFACE Y (IN.)	PRESSURE SURFACE Z (IN.)	PRESSURE SURFACE Y (IN.)
0.00	-0.5700	-0.8083	-0.5427	-0.8242	-0.5973	-0.7912	-0.5677	-0.8096	-0.6265	-0.7714	-0.5947	-0.7924
0.05	-0.5233	-0.7199	-0.4885	-0.7407	-0.5488	-0.7039	-0.5109	-0.7280	-0.5763	-0.6852	-0.5353	-0.7132
0.12	-0.4563	-0.5969	-0.4123	-0.6238	-0.4790	-0.5827	-0.4310	-0.6141	-0.5038	-0.5658	-0.4515	-0.6026
0.20	-0.3773	-0.4575	-0.3248	-0.4904	-0.3965	-0.4457	-0.3393	-0.4842	-0.4177	-0.4312	-0.3551	-0.4765
0.30	-0.2751	-0.2853	-0.2152	-0.3238	-0.2895	-0.2767	-0.2239	-0.3220	-0.3055	-0.2658	-0.2337	-0.3195
0.40	-0.1694	-0.1152	-0.1052	-0.1574	-0.1782	-0.1105	-0.1080	-0.1602	-0.1883	-0.1038	-0.1114	-0.1630
0.50	-0.0603	0.0527	0.0049	0.0089	-0.0629	0.0530	0.0084	0.0013	-0.0664	0.0548	0.0116	-0.0070
0.60	0.0520	0.2183	0.1150	0.1752	0.0561	0.2137	0.1250	0.1626	0.0599	0.2098	0.1352	0.1486
0.70	0.1674	0.3816	0.2252	0.3413	0.1787	0.3716	0.2418	0.3238	0.1903	0.3612	0.2592	0.3038
0.80	0.2858	0.5425	0.3355	0.5071	0.3045	0.5267	0.3587	0.4847	0.3245	0.5092	0.3834	0.4588
0.88	0.3825	0.6694	0.4237	0.6396	0.4073	0.6488	0.4521	0.6135	0.4344	0.6251	0.4828	0.5328
0.95	0.4685	0.7793	0.5008	0.7555	0.4987	0.7542	0.5337	0.7261	0.5323	0.7247	0.5697	0.6912
1.00	0.5307	0.8570	0.5557	0.8382	0.5648	0.8287	0.5919	0.8065	0.6030	0.7949	0.6317	0.7687
L.E. CIRCLE CENTER			-0.5560	-0.8156			-0.5820	-0.7996			-0.6100	-0.7810
T.E. CIRCLE CENTER			0.5428	0.8470			0.5778	0.8169			0.6166	0.7809

TABLE III. - Continued.

** BLADE SECTION COORDINATES OF ROTOR NO. 2 IN THE TURBOMACHINE ORIENTATION **

FRACT. OF SURF.	SECTION 7 FOR XCUT OF 7.5000 IN. SUCTION SURFACE Z (IN.)	SUCTION SURFACE Y (IN.)	PRESSURE SURFACE Z (IN.)	PRESSURE SURFACE Y (IN.)	SECTION 8 FOR XCUT OF 7.1250 IN. SUCTION SURFACE Z (IN.)	SUCTION SURFACE Y (IN.)	PRESSURE SURFACE Z (IN.)	PRESSURE SURFACE Y (IN.)	SECTION 9 FOR XCUT OF 6.7500 IN. SUCTION SURFACE Z (IN.)	SUCTION SURFACE Y (IN.)	PRESSURE SURFACE Z (IN.)	PRESSURE SURFACE Y (IN.)
0.00	-0.6570	-0.7467	-0.6233	-0.7725	-0.6889	-0.7227	-0.6533	-0.7494	-0.7218	-0.6936	-0.6844	-0.7231
0.05	-0.6052	-0.6635	-0.5612	-0.6957	-0.6355	-0.6384	-0.5887	-0.6750	-0.6670	-0.6100	-0.6178	-0.6511
0.12	-0.5300	-0.5458	-0.4736	-0.5886	-0.5577	-0.5222	-0.4975	-0.5716	-0.5866	-0.4952	-0.5233	-0.5513
0.20	-0.4403	-0.4135	-0.3725	-0.4668	-0.4644	-0.3923	-0.3920	-0.4543	-0.4895	-0.3676	-0.4136	-0.4385
0.30	-0.3228	-0.2518	-0.2450	-0.3154	-0.3413	-0.2345	-0.2583	-0.3090	-0.3606	-0.2139	-0.2741	-0.2998
0.40	-0.1994	-0.0944	-0.1161	-0.1649	-0.2113	-0.0822	-0.1228	-0.1653	-0.2235	-0.0672	-0.1318	-0.1636
0.50	-0.0705	0.0585	0.0139	-0.0153	-0.0747	0.0643	0.0147	-0.0231	-0.0787	0.0722	0.0132	-0.0299
0.60	0.0637	0.2069	0.1450	0.1335	0.0682	0.2049	0.1537	0.1176	0.0735	0.2036	0.1607	0.1012
0.70	0.2028	0.3507	0.2769	0.2816	0.2169	0.3393	0.2943	0.2569	0.2326	0.3267	0.3106	0.2296
0.80	0.3465	0.4898	0.4094	0.4292	0.3711	0.4674	0.4363	0.3949	0.3981	0.4412	0.4629	0.3556
0.88	0.4645	0.5977	0.5158	0.5469	0.4982	0.5653	0.5507	0.5045	0.5349	0.5264	0.5863	0.4545
0.95	0.5699	0.6898	0.6090	0.6498	0.6118	0.6475	0.6513	0.5999	0.6575	0.5960	0.6953	0.5398
1.00	0.6462	0.7542	0.6756	0.7232	0.6944	0.7043	0.7234	0.6678	0.7467	0.6428	0.7738	0.6000
L.E. CIRCLE CENTER			-0.6393	-0.7594			-0.6700	-0.7346			-0.7018	-0.7067
T.E. CIRCLE CENTER			0.6598	0.7377			0.7074	0.6849			0.7583	0.6202

FRACT. OF SURF.	SECTION 10 FOR XCUT OF 6.3750 IN. SUCTION SURFACE Z (IN.)	SUCTION SURFACE Y (IN.)	PRESSURE SURFACE Z (IN.)	PRESSURE SURFACE Y (IN.)	SECTION 11 FOR XCUT OF 6.0000 IN. SUCTION SURFACE Z (IN.)	SUCTION SURFACE Y (IN.)	PRESSURE SURFACE Z (IN.)	PRESSURE SURFACE Y (IN.)	SECTION 12 FOR XCUT OF 5.6500 IN. SUCTION SURFACE Z (IN.)	SUCTION SURFACE Y (IN.)	PRESSURE SURFACE Z (IN.)	PRESSURE SURFACE Y (IN.)
0.00	-0.7550	-0.6617	-0.7159	-0.6941	-0.7890	-0.6272	-0.7478	-0.6621	-0.8252	-0.5929	-0.7817	-0.6294
0.05	-0.6989	-0.5784	-0.6476	-0.6239	-0.7321	-0.5435	-0.6791	-0.5928	-0.7686	-0.5072	-0.7140	-0.5590
0.12	-0.6160	-0.4646	-0.5505	-0.5272	-0.6474	-0.4296	-0.5807	-0.4977	-0.6830	-0.3912	-0.6161	-0.4632
0.20	-0.5152	-0.3390	-0.4323	-0.4186	-0.5432	-0.3049	-0.4652	-0.3921	-0.5761	-0.2653	-0.4998	-0.3581
0.30	-0.3802	-0.1893	-0.2924	-0.2863	-0.4022	-0.1581	-0.3159	-0.2654	-0.4291	-0.1195	-0.3474	-0.2348
0.40	-0.2358	-0.0483	-0.1437	-0.1581	-0.2498	-0.0228	-0.1612	-0.1451	-0.2677	0.0110	-0.1871	-0.1215
0.50	-0.0821	0.0829	0.0089	-0.0340	-0.0862	0.0994	-0.0010	-0.0318	-0.0927	0.1234	-0.0192	-0.0196
0.60	0.0801	0.2037	0.1651	0.0857	0.0878	0.2069	0.1646	0.0736	0.0948	0.2146	0.1563	0.0680
0.70	0.2505	0.3132	0.3251	0.2006	0.2712	0.2979	0.3357	0.1700	0.2934	0.2810	0.3392	0.1396
0.80	0.4283	0.4105	0.4883	0.3107	0.4432	0.3705	0.5121	0.2562	0.5012	0.3181	0.5292	0.1915
0.88	0.5756	0.4791	0.6223	0.3950	0.6221	0.4134	0.6570	0.3168	0.6723	0.3228	0.6860	0.2159
0.95	0.7079	0.5317	0.7410	0.4658	0.7645	0.4386	0.7866	0.3628	0.8242	0.3058	0.8263	0.2223
1.00	0.8042	0.5649	0.8269	0.5148	0.8678	0.4488	0.8807	0.3912	0.9329	0.2799	0.9282	0.2170
L.E. CIRCLE CENTER			-0.7339	-0.6760			-0.7667	-0.6427			-0.8017	-0.6090
T.E. CIRCLE CENTER			0.8131	0.5387			0.8713	0.4194			0.9276	0.2487

TABLE III. - Continued.

** BLADE SECTION COORDINATES OF ROTOR NO. 2 IN THE TURBOMACHINE ORIENTATION **

FRACT. OF SURF.	SECTION 13 FOR XCUT OF 5.4500 IN. SUCTION SURFACE Z (IN.)	SUCTION SURFACE Y (IN.)	PRESSURE SURFACE Z (IN.)	PRESSURE SURFACE Y (IN.)	SECTION 14 FOR XCUT OF 5.2250 IN. SUCTION SURFACE Z (IN.)	SUCTION SURFACE Y (IN.)	PRESSURE SURFACE Z (IN.)	PRESSURE SURFACE Y (IN.)	SECTION 15 FOR XCUT OF 5.4269 IN. SUCTION SURFACE Z (IN.)	SUCTION SURFACE Y (IN.)	PRESSURE SURFACE Z (IN.)	PRESSURE SURFACE Y (IN.)
0.00	-0.8493	-0.5723	-0.9040	-0.6093	-0.8801	-0.5485	-0.8325	-0.5854	-0.8522	-0.5699	-0.8067	-0.6069
0.05	-0.7933	-0.4846	-0.7376	-0.5372	-0.8254	-0.4575	-0.7685	-0.5102	-0.7964	-0.4819	-0.7406	-0.5345
0.12	-0.7076	-0.366	-0.6410	-0.4395	-0.7402	-0.3351	-0.6741	-0.4090	-0.7107	-0.3632	-0.6441	-0.4366
0.20	-0.5993	-0.2384	-0.5249	-0.3335	-0.6304	-0.2038	-0.5589	-0.3005	-0.6023	-0.2351	-0.5281	-0.3304
0.30	-0.4486	-0.0921	-0.3710	-0.2110	-0.4751	-0.0557	-0.4037	-0.1778	-0.4511	-0.0886	-0.3740	-0.2079
0.40	-0.2813	0.0360	-0.2076	-0.1016	-0.3002	0.0700	-0.2366	-0.0722	-0.2830	0.0392	-0.2102	-0.0989
0.50	-0.0984	0.1420	-0.0348	-0.0074	-0.1070	0.1681	-0.0580	0.0126	-0.0992	0.1444	-0.0369	-0.0057
0.60	0.0985	0.2216	0.1470	0.0682	0.1022	0.2324	0.1317	0.0720	0.0989	0.2226	0.1457	0.0684
0.70	0.3075	0.2697	0.3375	0.1213	0.3245	0.2552	0.3317	0.0999	0.3092	0.2683	0.3371	0.1191
0.80	0.5257	0.2795	0.5361	0.1466	0.5561	0.2268	0.5409	0.0879	0.5287	0.2745	0.5368	0.1410
0.88	0.7045	0.2540	0.7002	0.1422	0.7440	0.1585	0.7135	0.0425	0.7084	0.2451	0.7017	0.1328
0.95	0.8616	0.2030	0.8469	0.1164	0.9068	0.0591	0.8675	-0.0296	0.8661	0.1897	0.8491	0.1028
1.00	0.9727	0.1479	0.9531	0.0833	1.0198	-0.0380	0.9782	-0.1031	0.9774	0.1307	0.9558	0.0660
L.E. CIRCLE CENTER			-0.8249	-0.5887			-0.8547	-0.5649			-0.8278	-0.5863
T.E. CIRCLE CENTER			0.9602	0.1164			0.9969	-0.0692			0.9640	0.0992

TABLE III. - Continued.

** BLADE SECTION PROPERTIES OF STATOR NO. 1 FOLLOWING ROTOR NO. 2 **

NUMBER OF BLADES = 42.0 AXIAL LOCATION OF STACKING LINE IN COMPRESSOR = 12.700 IN.

BLADE SECTION NO.	RAD. LOC. (IN.)	STACKING POINT COORDINATES L (IN.)	STACKING POINT COORDINATES H (IN.)	SECTION SETTING ANGLE (DEG.)	BLADE SECTION C.G. COORDINATES L (IN.)	BLADE SECTION C.G. COORDINATES H (IN.)	SECTION AREA (IN.)**2	MOMENTS OF INERTIA THROUGH C.G. IMIN (IN.)**4	MOMENTS OF INERTIA THROUGH C.G. IMAX (IN.)**4	IMAX SETTING ANGLE (DEG.)	SECTION TORSION CONSTANT (IN.)**4	SECTION TWIST STIFFNESS (IN.)**6
1	9.325	0.8764	0.1693	9.481	0.8764	0.1693	0.19590	0.0007981	0.039209	9.480	0.0009141	0.0080311
2	8.825	0.8765	0.1506	11.372	0.8765	0.1506	0.18626	0.0006137	0.036748	11.372	0.0008044	0.0074988
3	8.325	0.8764	0.1448	12.510	0.8764	0.1448	0.17770	0.0005363	0.034693	12.514	0.0007081	0.0070623
4	7.825	0.8764	0.1456	13.393	0.8764	0.1456	0.16957	0.0005030	0.032800	13.408	0.0006214	0.0066661

SECTION NO. 1 COORDINATES

L (IN.)	HP (IN.)	HS (IN.)
0.0000	0.0247	0.0247
0.0116	*******	0.0456
0.0332	0.0015	*******
0.0500	0.0076	0.0687
0.1000	0.0250	0.0967
0.1500	0.0412	0.1225
0.2000	0.0562	0.1461
0.2500	0.0700	0.1678
0.3000	0.0827	0.1875
0.3500	0.0943	0.2053
0.4000	0.1048	0.2214
0.4500	0.1141	0.2357
0.5000	0.1225	0.2483
0.5500	0.1297	0.2593
0.6000	0.1359	0.2687
0.6500	0.1411	0.2764
0.7000	0.1452	0.2826
0.7500	0.1483	0.2872
0.8000	0.1504	0.2903
0.8500	0.1514	0.2919
0.9000	0.1515	0.2919
0.9500	0.1505	0.2904
1.0000	0.1485	0.2874
1.0500	0.1454	0.2829
1.1000	0.1413	0.2768
1.1500	0.1362	0.2691
1.2000	0.1301	0.2598
1.2500	0.1229	0.2489
1.3000	0.1146	0.2364
1.3500	0.1053	0.2222
1.4000	0.0948	0.2062
1.4500	0.0833	0.1885
1.5000	0.0707	0.1689
1.5500	0.0570	0.1474
1.6000	0.0420	0.1238
1.6500	0.0260	0.0982
1.7000	0.0087	0.0703
1.7500	-0.0099	0.0396
1.7198	0.0015	*******
1.7413	*******	0.0455
1.7529	0.0246	0.0246

SECTION NO. 2 COORDINATES

L (IN.)	HP (IN.)	HS (IN.)
0.0000	0.0226	0.0226
0.0117	*******	0.0424
0.0293	0.0010	*******
0.0500	0.0073	0.0628
0.1000	0.0218	0.0877
0.1500	0.0354	0.1107
0.2000	0.0480	0.1319
0.2500	0.0596	0.1513
0.3000	0.0703	0.1691
0.3500	0.0801	0.1852
0.4000	0.0889	0.1997
0.4500	0.0969	0.2127
0.5000	0.1039	0.2242
0.5500	0.1101	0.2341
0.6000	0.1154	0.2426
0.6500	0.1197	0.2497
0.7000	0.1233	0.2554
0.7500	0.1259	0.2596
0.8000	0.1277	0.2624
0.8500	0.1286	0.2639
0.9000	0.1286	0.2639
0.9500	0.1277	0.2625
1.0000	0.1260	0.2598
1.0500	0.1234	0.2556
1.1000	0.1200	0.2501
1.1500	0.1156	0.2431
1.2000	0.1104	0.2347
1.2500	0.1043	0.2248
1.3000	0.0973	0.2134
1.3500	0.0894	0.2005
1.4000	0.0806	0.1861
1.4500	0.0709	0.1701
1.5000	0.0602	0.1524
1.5500	0.0487	0.1331
1.6000	0.0362	0.1120
1.6500	0.0227	0.0891
1.7000	0.0082	0.0644
1.7500	-0.0073	0.0372
1.7239	0.0010	*******
1.7414	*******	0.0423
1.7531	0.0226	0.0226

SECTION NO. 3 COORDINATES

L (IN.)	HP (IN.)	HS (IN.)
0.0000	0.0206	0.0206
0.0110	*******	0.0388
0.0264	0.0008	*******
0.0500	0.0077	0.0588
0.1000	0.0214	0.0828
0.1500	0.0343	0.1050
0.2000	0.0463	0.1254
0.2500	0.0573	0.1442
0.3000	0.0675	0.1613
0.3500	0.0768	0.1769
0.4000	0.0852	0.1910
0.4500	0.0928	0.2036
0.5000	0.0995	0.2147
0.5500	0.1054	0.2244
0.6000	0.1104	0.2326
0.6500	0.1146	0.2395
0.7000	0.1180	0.2450
0.7500	0.1205	0.2491
0.8000	0.1222	0.2518
0.8500	0.1230	0.2532
0.9000	0.1231	0.2533
0.9500	0.1223	0.2520
1.0000	0.1206	0.2493
1.0500	0.1182	0.2453
1.1000	0.1149	0.2399
1.1500	0.1107	0.2331
1.2000	0.1058	0.2250
1.2500	0.1000	0.2154
1.3000	0.0933	0.2044
1.3500	0.0858	0.1919
1.4000	0.0774	0.1779
1.4500	0.0682	0.1624
1.5000	0.0580	0.1453
1.5500	0.0470	0.1266
1.6000	0.0351	0.1062
1.6500	0.0223	0.0841
1.7000	0.0086	0.0602
1.7500	-0.0062	0.0341
1.7267	0.0008	*******
1.7421	*******	0.0386
1.7539	0.0205	0.0205

SECTION NO. 4 COORDINATES

L (IN.)	HP (IN.)	HS (IN.)
0.0000	0.0186	0.0186
0.0098	*******	0.0349
0.0240	0.0008	*******
0.0500	0.0085	0.0557
0.1000	0.0226	0.0798
0.1500	0.0357	0.1022
0.2000	0.0480	0.1228
0.2500	0.0593	0.1417
0.3000	0.0697	0.1590
0.3500	0.0792	0.1747
0.4000	0.0878	0.1889
0.4500	0.0956	0.2015
0.5000	0.1025	0.2128
0.5500	0.1085	0.2225
0.6000	0.1136	0.2309
0.6500	0.1179	0.2378
0.7000	0.1214	0.2433
0.7500	0.1240	0.2475
0.8000	0.1257	0.2503
0.8500	0.1266	0.2517
0.9000	0.1266	0.2517
0.9500	0.1258	0.2504
1.0000	0.1242	0.2478
1.0500	0.1217	0.2437
1.1000	0.1183	0.2383
1.1500	0.1141	0.2315
1.2000	0.1090	0.2233
1.2500	0.1031	0.2136
1.3000	0.0963	0.2026
1.3500	0.0886	0.1900
1.4000	0.0800	0.1759
1.4500	0.0706	0.1603
1.5000	0.0602	0.1430
1.5500	0.0489	0.1242
1.6000	0.0367	0.1036
1.6500	0.0236	0.0813
1.7000	0.0095	0.0571
1.7500	-0.0057	0.0307
1.7292	0.0008	*******
1.7433	*******	0.0347
1.7530	0.0184	0.0184

TABLE III. - Continued.

** BLADE SECTION PROPERTIES OF STATOR NO. 1 FOLLOWING ROTOR NO. 2 **

NUMBER OF BLADES = 42.0 AXIAL LOCATION OF STACKING LINE IN COMPRESSOR = 12.700 IN.

BLADE SECTION NO.	RAD. LOC. (IN.)	STACKING POINT COORDINATES L (IN.)	STACKING POINT COORDINATES H (IN.)	SECTION SETTING ANGLE (DEG.)	BLADE SECTION C.G. COORDINATES L (IN.)	BLADE SECTION C.G. COORDINATES H (IN.)	SECTION AREA (IN.)**2	MOMENTS OF INERTIA THROUGH C.G. IMIN (IN.)**4	MOMENTS OF INERTIA THROUGH C.G. IMAX (IN.)**4	IMAX SETTING ANGLE (DEG.)	SECTION TORSION CONSTANT (IN.)**4	SECTION TWIST STIFFNESS (IN.)**6
5	7.325	0.8764	0.1499	14.373	0.8764	0.1499	0.16163	0.0004887	0.030975	14.397	0.0005427	0.0062847
6	6.850	0.8763	0.1559	15.246	0.8763	0.1559	0.15417	0.0004836	0.029267	15.284	0.0004748	0.0059269
7	6.375	0.8763	0.1719	16.252	0.8763	0.1719	0.14727	0.0005296	0.027771	16.354	0.0004144	0.0056223
8	5.900	0.8763	0.2148	17.513	0.8763	0.2148	0.14222	0.0007427	0.026993	17.783	0.0003636	0.0055024

SECTION NO. 5 COORDINATES L (IN.)	HP (IN.)	HS (IN.)	SECTION NO. 6 COORDINATES L (IN.)	HP (IN.)	HS (IN.)	SECTION NO. 7 COORDINATES L (IN.)	HP (IN.)	HS (IN.)	SECTION NO. 8 COORDINATES L (IN.)	HP (IN.)	HS (IN.)
0.0000	0.0166	0.0166	0.0000	0.0146	0.0146	0.0000	0.0127	0.0127	0.0000	0.0108	0.0108
0.0085	*******	0.0310	0.0073	*******	0.0273	0.0059	*******	0.0234	0.0040	*******	0.0192
0.0216	0.0008	*******	0.0194	0.0008	*******	0.0175	0.0009	*******	0.0161	0.0014	*******
0.0500	0.0097	0.0531	0.0500	0.0111	0.0510	0.0500	0.0135	0.0503	0.0500	0.0191	0.0542
0.1000	0.0246	0.0780	0.1000	0.0271	0.0768	0.1000	0.0319	0.0785	0.1000	0.0438	0.0892
0.1500	0.0385	0.1010	0.1500	0.0420	0.1007	0.1500	0.0490	0.1046	0.1500	0.0668	0.1213
0.2000	0.0515	0.1222	0.2000	0.0558	0.1227	0.2000	0.0649	0.1286	0.2000	0.0881	0.1506
0.2500	0.0635	0.1416	0.2500	0.0686	0.1428	0.2500	0.0797	0.1506	0.2500	0.1079	0.1774
0.3000	0.0745	0.1594	0.3000	0.0804	0.1613	0.3000	0.0932	0.1706	0.3000	0.1260	0.2018
0.3500	0.0846	0.1756	0.3500	0.0912	0.1780	0.3500	0.1056	0.1888	0.3500	0.1426	0.2238
0.4000	0.0937	0.1901	0.4000	0.1009	0.1931	0.4000	0.1169	0.2052	0.4000	0.1576	0.2437
0.4500	0.1019	0.2032	0.4500	0.1097	0.2066	0.4500	0.1270	0.2199	0.4500	0.1711	0.2612
0.5000	0.1092	0.2147	0.5000	0.1175	0.2185	0.5000	0.1360	0.2329	0.5000	0.1829	0.2767
0.5500	0.1155	0.2247	0.5500	0.1243	0.2289	0.5500	0.1438	0.2442	0.5500	0.1936	0.2905
0.6000	0.1210	0.2333	0.6000	0.1301	0.2378	0.6000	0.1506	0.2538	0.6000	0.2028	0.3021
0.6500	0.1255	0.2404	0.6500	0.1350	0.2451	0.6500	0.1562	0.2618	0.6500	0.2103	0.3117
0.7000	0.1292	0.2461	0.7000	0.1389	0.2510	0.7000	0.1608	0.2683	0.7000	0.2164	0.3195
0.7500	0.1319	0.2504	0.7500	0.1418	0.2555	0.7500	0.1643	0.2731	0.7500	0.2212	0.3254
0.8000	0.1338	0.2532	0.8000	0.1438	0.2584	0.8000	0.1666	0.2764	0.8000	0.2245	0.3295
0.8500	0.1347	0.2547	0.8500	0.1448	0.2600	0.8500	0.1679	0.2782	0.8500	0.2264	0.3318
0.9000	0.1348	0.2548	0.9000	0.1449	0.2601	0.9000	0.1681	0.2784	0.9000	0.2269	0.3322
0.9500	0.1339	0.2534	0.9500	0.1440	0.2587	0.9500	0.1672	0.2770	0.9500	0.2259	0.3308
1.0000	0.1322	0.2507	1.0000	0.1422	0.2559	1.0000	0.1652	0.2741	1.0000	0.2235	0.3275
1.0500	0.1296	0.2466	1.0500	0.1394	0.2517	1.0500	0.1621	0.2696	1.0500	0.2196	0.3225
1.1000	0.1260	0.2410	1.1000	0.1357	0.2460	1.1000	0.1579	0.2635	1.1000	0.2143	0.3155
1.1500	0.1216	0.2341	1.1500	0.1309	0.2388	1.1500	0.1525	0.2558	1.1500	0.2075	0.3066
1.2000	0.1162	0.2256	1.2000	0.1252	0.2301	1.2000	0.1461	0.2465	1.2000	0.1991	0.2957
1.2500	0.1100	0.2158	1.2500	0.1186	0.2199	1.2500	0.1385	0.2355	1.2500	0.1893	0.2828
1.3000	0.1028	0.2044	1.3000	0.1109	0.2081	1.3000	0.1297	0.2228	1.3000	0.1778	0.2679
1.3500	0.0947	0.1915	1.3500	0.1022	0.1947	1.3500	0.1198	0.2084	1.3500	0.1647	0.2507
1.4000	0.0856	0.1770	1.4000	0.0925	0.1798	1.4000	0.1086	0.1921	1.4000	0.1500	0.2313
1.4500	0.0756	0.1609	1.4500	0.0818	0.1631	1.4500	0.0963	0.1740	1.4500	0.1335	0.2095
1.5000	0.0646	0.1432	1.5000	0.0701	0.1447	1.5000	0.0827	0.1540	1.5000	0.1152	0.1852
1.5500	0.0526	0.1238	1.5500	0.0573	0.1245	1.5500	0.0678	0.1319	1.5500	0.0951	0.1581
1.6000	0.0397	0.1026	1.6000	0.0434	0.1025	1.6000	0.0517	0.1077	1.6000	0.0729	0.1281
1.6500	0.0257	0.0795	1.6500	0.0284	0.0786	1.6500	0.0342	0.0813	1.6500	0.0488	0.0950
1.7000	0.0108	0.0546	1.7000	0.0123	0.0525	1.7000	0.0153	0.0525	1.7000	0.0224	0.0583
1.7500	-0.0054	0.0272	1.7500	-0.0051	0.0240	1.7500	-0.0052	0.0206	1.7500	-0.0066	0.0169
1.7316	0.0008	*******	1.7[illegible]	0.0008	*******	1.7358	0.0009	*******	1.7370	0.0014	*******
1.7446	*******	0.0307	1.7[illegible]8	*******	0.0268	1.7473	*******	0.0229	1.7491	*******	0.0184
1.7530	0.0164	0.0164	1.7530	0.0144	0.0144	1.7529	0.0124	0.0124	1.7528	0.0105	0.0105

TABLE III. - Continued.

** BLADE SECTION PROPERTIES OF STATOR NO. 1 FOLLOWING ROTOR NO. 2 **

NUMBER OF BLADES = 42.0 AXIAL LOCATION OF STACKING LINE IN COMPRESSOR = 12.700 IN.

BLADE SECTION NO.	RAD. LOC. (IN.)	STACKING POINT COORDINATES L (IN.)	STACKING POINT COORDINATES H (IN.)	SECTION SETTING ANGLE (DEG.)	BLADE SECTION C.G. COORDINATES L (IN.)	BLADE SECTION C.G. COORDINATES H (IN.)	SECTION AREA (IN.)**2	MOMENTS OF INERTIA THROUGH C.G. IMIN (IN.)**4	MOMENTS OF INERTIA THROUGH C.G. IMAX (IN.)**4	IMAX SETTING ANGLE (DEG.)	SECTION TORSION CONSTANT (IN.)**4	SECTION TWIST STIFFNESS (IN.)**6
9	5.800	0.8765	0.2290	17.824	0.8765	0.2290	0.14159	0.0008286	0.027007	18.147	0.0003544	0.0055240
10	9.299	0.8765	0.1678	9.569	0.8765	0.1678	0.19535	0.0007835	0.039064	9.568	0.0009080	0.0079996

SECTION NO. 9 COORDINATES L (IN.)	HP (IN.)	HS (IN.)	SECTION NO. 10 COORDINATES L (IN.)	HP (IN.)	HS (IN.)
0.0000	0.0104	0.0104	0.0000	0.0245	0.0245
0.0035	*******	0.0183	0.0117	*******	0.0455
0.0159	0.0015	*******	0.0329	0.0015	*******
0.0500	0.0209	0.0560	0.0500	0.0074	0.0683
0.1000	0.0478	0.0934	0.1000	0.0247	0.0961
0.1500	0.0728	0.1275	0.1500	0.0407	0.1216
0.2000	0.0959	0.1587	0.2000	0.0555	0.1451
0.2500	0.1173	0.1870	0.2500	0.0691	0.1665
0.3000	0.1369	0.2127	0.3000	0.0817	0.1861
0.3500	0.1548	0.2361	0.3500	0.0931	0.2038
0.4000	0.1710	0.2571	0.4000	0.1034	0.2197
0.4500	0.1856	0.2751	0.4500	0.1127	0.2339
0.5000	0.1985	0.2910	0.5000	0.1209	0.2465
0.5500	0.2099	0.3065	0.5500	0.1281	0.2574
0.6000	0.2196	0.3189	0.6000	0.1342	0.2667
0.6500	0.2279	0.3285	0.6500	0.1393	0.2744
0.7000	0.2345	0.3365	0.7000	0.1434	0.2805
0.7500	0.2397	0.3429	0.7500	0.1465	0.2851
0.8000	0.2433	0.3473	0.8000	0.1485	0.2882
0.8500	0.2454	0.3497	0.8500	0.1496	0.2897
0.9000	0.2459	0.3502	0.9000	0.1496	0.2898
0.9500	0.2449	0.3488	0.9500	0.1486	0.2883
1.0000	0.2424	0.3455	1.0000	0.1466	0.2853
1.0500	0.2383	0.3402	1.0500	0.1436	0.2808
1.1000	0.2327	0.3329	1.1000	0.1396	0.2747
1.1500	0.2254	0.3237	1.1500	0.1345	0.2671
1.2000	0.2165	0.3124	1.2000	0.1284	0.2579
1.2500	0.2059	0.2989	1.2500	0.1213	0.2471
1.3000	0.1936	0.2832	1.3000	0.1132	0.2347
1.3500	0.1795	0.2653	1.3500	0.1040	0.2206
1.4000	0.1636	0.2449	1.4000	0.0937	0.2047
1.4500	0.1458	0.2219	1.4500	0.0823	0.1871
1.5000	0.1261	0.1962	1.5000	0.0698	0.1676
1.5500	0.1042	0.1675	1.5500	0.0563	0.1463
1.6000	0.0801	0.1357	1.6000	0.0416	0.1230
1.6500	0.0537	0.1003	1.6500	0.0257	0.0976
1.7000	0.0248	0.0609	1.7000	0.0087	0.0699
1.7500	-0.0071	0.0162	1.7500	-0.0096	0.0395
1.7372	0.2075	*******	1.7201	0.0015	*******
1.7496	*******	0.0175	1.7413	*******	0.0453
1.7528	0.0101	0.0101	1.7529	0.0245	0.0245

TABLE III. - Continued.

** BLADE SECTION COORDINATES OF STATOR NO. 1 FOLLOWING ROTOR NO. 2 IN THE TURBOMACHINE ORIENTATION **

FRACT. OF SURF.	SECTION 1 FOR XOUT OF 9.3250 IN. SUCTION SURFACE Z (IN.)	SUCTION SURFACE Y (IN.)	PRESSURE SURFACE Z (IN.)	PRESSURE SURFACE Y (IN.)
0.00	-0.8326	-0.2646	-0.8041	-0.3043
0.05	-0.7626	-0.2062	-0.7286	-0.2635
0.12	-0.6592	-0.1314	-0.6295	-0.2097
0.20	-0.5345	-0.0562	-0.4939	-0.1555
0.30	-0.3700	0.0219	-0.3316	-0.0978
0.40	-0.1978	0.0823	-0.1658	-0.0517
0.50	-0.0252	0.1212	0.0029	-0.0174
0.60	0.1658	0.1411	0.1737	0.0249
0.70	0.3429	0.1409	0.3455	0.0152
0.80	0.5239	0.1205	0.5177	0.0034
0.88	0.6663	0.0898	0.6553	0.0032
0.95	0.7883	0.0527	0.7746	-0.0121
1.00	0.8734	0.0294	0.8595	-0.0265
L.E. CIRCLE CENTER			-0.8164	-0.2829
T.E. CIRCLE CENTER			0.8641	-0.0024

FRACT. OF SURF.	SECTION 2 FOR XOUT OF 8.8250 IN. SUCTION SURFACE Z (IN.)	SUCTION SURFACE Y (IN.)	PRESSURE SURFACE Z (IN.)	PRESSURE SURFACE Y (IN.)
0.00	-0.8265	-0.2766	-0.8011	-0.3137
0.05	-0.7561	-0.2203	-0.7249	-0.2738
0.12	-0.6529	-0.1474	-0.6164	-0.2218
0.20	-0.5291	-0.0733	-0.4897	-0.1680
0.30	-0.3667	0.0151	-0.2281	-0.1094
0.40	-0.1972	0.0668	-0.1632	-0.0605
0.50	-0.0225	0.1112	0.0343	-0.0215
0.60	0.1661	0.1378	0.1739	0.0073
0.70	0.3363	0.1464	0.3449	0.0260
0.80	0.5164	0.1369	0.5167	0.0344
0.88	0.6592	0.1164	0.6543	0.0337
0.95	0.7825	0.0891	0.7745	0.0277
1.00	0.8692	0.0644	0.8602	0.0204
L.E. CIRCLE CENTER			-0.8119	-0.2939
T.E. CIRCLE CENTER			0.8625	0.0428

FRACT. OF SURF.	SECTION 3 FOR XOUT OF 8.3250 IN. SUCTION SURFACE Z (IN.)	SUCTION SURFACE Y (IN.)	PRESSURE SURFACE Z (IN.)	PRESSURE SURFACE Y (IN.)
0.00	-0.8220	-0.2909	-0.7987	-0.3246
0.05	-0.7520	-0.2343	-0.7226	[illegible]
0.12	-0.6495	-0.1610	-0.6145	[illegible]
0.20	-0.5266	-0.0858	-0.4828	[illegible]
0.30	-0.3654	-0.0056	-0.3168	[illegible]
0.40	-0.1972	0.0586	-0.1624	[illegible]
0.50	-0.0235	0.1061	0.0347	[illegible]
0.60	0.1598	0.1365	0.1745	[illegible]
0.70	0.3336	0.1496	0.3458	[illegible]
0.80	0.5137	0.1451	0.5167	[illegible]
0.88	0.6568	0.1289	0.6546	[illegible]
0.95	0.7837	0.1056	0.7750	[illegible]
1.00	0.8681	0.0839	0.8613	[illegible]
L.E. CIRCLE CENTER			-0.8086	-0.3266
T.E. CIRCLE CENTER			0.8627	[illegible]

FRACT. OF SURF.	SECTION 4 FOR XOUT OF 7.8250 IN. SUCTION SURFACE Z (IN.)	SUCTION SURFACE Y (IN.)	PRESSURE SURFACE Z (IN.)	PRESSURE SURFACE Y (IN.)
0.00	-0.8174	-0.3084	-0.7957	-0.3383
0.05	-0.7484	-0.2504	-0.7204	-0.2969
0.12	-0.6471	-0.1759	-0.6128	-0.2415
0.20	-0.5254	-0.0974	-0.4873	-0.1824
0.30	-0.3653	-0.0142	-0.3267	-0.1122
0.40	-0.1979	0.0530	-0.1624	-0.0459
0.50	-0.0246	0.1034	0.0344	-0.0184
0.60	0.1528	0.1366	0.1738	0.0148
0.70	0.3326	0.1522	0.3449	0.0425
0.80	0.5131	0.1501	0.5173	0.0571
0.88	0.6567	0.1357	0.6551	0.0618
0.95	0.7812	0.1138	0.7767	0.0556
1.00	0.8690	0.0929	0.8632	0.0567
L.E. CIRCLE CENTER			-0.8051	-0.3223
T.E. CIRCLE CENTER			0.8643	0.0751

FRACT. OF SURF.	SECTION 5 FOR XOUT OF 7.3250 IN. SUCTION SURFACE Z (IN.)	SUCTION SURFACE Y (IN.)	PRESSURE SURFACE Z (IN.)	PRESSURE SURFACE Y (IN.)
0.00	-0.8112	-0.3316	-0.7909	-0.3566
0.05	-0.7437	[illegible]	-0.7167	-0.3116
0.12	-0.6443	[illegible]	-0.6136	-0.2525
0.20	-0.5242	[illegible]	-0.4862	-0.1985
0.30	-0.3656	-0.0233	-0.3247	-0.1218
0.40	-0.1930	0.0478	-0.1632	-0.0631
0.50	-0.0265	0.1017	0.0337	-0.0146
0.60	0.1515	0.1379	0.1733	0.0234
0.70	0.3318	0.1569	0.3450	0.0508
0.80	0.5133	0.1656	0.5120	0.0673
0.88	0.6573	0.1621	0.6569	0.0728
0.95	0.7824	0.1207	0.7786	0.0718
1.00	0.8706	0.1006	0.8655	0.0678
L.E. CIRCLE CENTER			-0.7998	-0.3426
T.E. CIRCLE CENTER			0.8665	0.0842

FRACT. OF SURF.	SECTION 6 FOR XOUT OF 6.8250 IN. SUCTION SURFACE Z (IN.)	SUCTION SURFACE Y (IN.)	PRESSURE SURFACE Z (IN.)	PRESSURE SURFACE Y (IN.)
0.00	-0.8046	-0.3526	-0.7859	-0.3756
0.05	-0.7388	-0.2900	-0.7131	-0.3271
0.12	-0.6415	-0.2081	-0.6064	-0.2642
0.20	-0.5232	-0.1233	-0.4854	-0.1982
0.30	-0.3661	-0.0316	-0.3276	-0.1249
0.40	-0.2083	0.0434	-0.1645	-0.0557
0.50	-0.0274	0.1006	0.0328	[illegible]
0.60	0.1504	0.1394	0.1727	[illegible]
0.70	0.3314	0.1593	0.3455	[illegible]
0.80	0.5135	0.1603	0.5128	[illegible]
0.88	0.6586	0.1458	0.6525	[illegible]
0.95	0.7842	0.1252	0.7822	[illegible]
1.00	0.8728	0.1041	0.8681	[illegible]
L.E. CIRCLE CENTER			-0.7942	-0.3523
T.E. CIRCLE CENTER			0.8691	[illegible]

TABLE III. - Concluded.

** BLADE SECTION COORDINATES OF STATOR NO. 1 FOLLOWING ROTOR NO. 2 IN THE TURBOMACHINE ORIENTATION **

FRACT. OF SURF.	SECTION 7 FOR XCUT OF 6.3750 IN. SUCTION SURFACE Z (IN.)	SUCTION SURFACE Y (IN.)	PRESSURE SURFACE Z (IN.)	PRESSURE SURFACE Y (IN.)	SECTION 8 FOR XCUT OF 5.9000 IN. SUCTION SURFACE Z (IN.)	SUCTION SURFACE Y (IN.)	PRESSURE SURFACE Z (IN.)	PRESSURE SURFACE Y (IN.)	SECTION 9 FOR XCUT OF 5.8000 IN. SUCTION SURFACE Z (IN.)	SUCTION SURFACE Y (IN.)	PRESSURE SURFACE Z (IN.)	PRESSURE SURFACE Y (IN.)
0.00	-0.7941	-0.3861	-0.7767	-0.4044	-0.7730	-0.4490	-0.7561	-0.4624	-0.7666	-0.4678	-0.7497	-0.4799
0.05	-0.7316	-0.3193	-0.7064	-0.3519	-0.7183	-0.3735	-0.6925	-0.4001	-0.7143	-0.3895	-0.6883	-0.4147
0.12	-0.6380	-0.2316	-0.6049	-0.2825	-0.6337	-0.2733	-0.5987	-0.3176	-0.6326	-0.2855	-0.5969	-0.3281
0.20	-0.5230	-0.1403	-0.4846	-0.2097	-0.5260	-0.1682	-0.4849	-0.2306	-0.5273	-0.1762	-0.4853	-0.2368
0.30	-0.3684	-0.0411	-0.3283	-0.1288	-0.3766	-0.0534	-0.3335	-0.1344	-0.3794	-0.0566	-0.3354	-0.1359
0.40	-0.2035	0.0402	-0.1663	-0.0600	-0.2127	0.0405	-0.1731	-0.0535	-0.2158	0.0412	-0.1755	-0.0513
0.50	-0.0303	0.1022	0.0006	-0.0037	-0.0374	0.1113	-0.0052	0.0109	-0.0396	0.1146	-0.0071	0.0154
0.60	0.1488	0.1441	0.1714	0.0397	0.1462	0.1573	0.1686	0.0578	0.1455	0.1616	0.1677	0.0432
0.70	0.3317	0.1652	0.3451	0.0696	0.3346	0.1773	0.3465	0.0863	0.3358	0.1810	0.3470	0.0910
0.80	0.5158	0.1650	0.5207	0.0859	0.5241	0.1705	0.5265	0.0958	0.5271	0.1717	0.5285	0.0979
0.88	0.6623	0.1495	0.6617	0.0888	0.6741	0.1454	0.6708	0.0892	0.6781	0.1433	0.6738	0.0880
0.95	0.7889	0.1247	0.7851	0.0841	0.8023	0.1093	0.7963	0.0731	0.8068	0.1032	0.8000	0.0680
1.00	0.8779	0.1007	0.8730	0.0764	0.8914	0.0754	0.8851	0.0555	0.8959	0.0659	0.8890	0.0471
L.E. CIRCLE CENTER			-0.7845	-0.3945			-0.7640	-0.4550			-0.7576	-0.4731
T.E. CIRCLE CENTER			0.8743	0.0888			0.8874	0.0657			0.8916	0.0568

FRACT. OF SURF.	SECTION 10 FOR XCUT OF 9.2990 IN. SUCTION SURFACE Z (IN.)	SUCTION SURFACE Y (IN.)	PRESSURE SURFACE Z (IN.)	PRESSURE SURFACE Y (IN.)
0.00	-0.8324	-0.2644	-0.8042	-0.3042
0.05	-0.7623	-0.2064	-0.7285	-0.2631
0.12	-0.6589	-0.1319	-0.6203	-0.2100
0.20	-0.5341	-0.0569	-0.4937	-0.1560
0.30	-0.3697	0.0210	-0.3314	-0.0984
0.40	-0.1977	0.0804	-0.1656	-0.0523
0.50	-0.0202	0.1205	0.0030	-0.0178
0.60	0.1606	0.1407	0.1737	0.0048
0.70	0.3425	0.1410	0.3455	0.0156
0.80	0.5234	0.1213	0.5176	0.0144
0.88	0.6658	0.0913	0.6550	0.0048
0.95	0.7879	0.0548	0.7746	-0.0098
1.00	0.8732	0.0230	0.8596	-0.0238
L.E. CIRCLE CENTER			-0.8163	-0.2829
T.E. CIRCLE CENTER			0.8640	0.0003

TABLE IV. - SUMMARY OF IDFF(IROW) INPUT OPTIONS

IDFF(IROW)	Centerline		Thickness		Centerline		Thickness	
	S_1	S_2	$S_{m,1}$	$S_{m,2}$	S_1	S_2	$S_{m,1}$	$S_{m,2}$
	Origin				Range (all positive S)			
-4	Leading edge	Trailing edge	Maximum thickness	Maximum thickness	0 to S_1/c	0 to S_2/c	0 to $S_{m,1}/c$	0 to $S_{m,2}/c$
-3	Transition point	Trailing edge						
-2	Leading edge	Transition point						
-1 or <-4	Transition point	Transition point						
1 or >4	Transition point	Transition point	Maximum thickness	Maximum thickness	0 to 1.0	0 to 1.0	0 to 1.0	0 to 1.0
2	Leading edge	Transition point						
3	Transition point	Trailing edge						
4	Leading edge	Trailing edge						

TABLE V. - CHARACTERISTICS OF EMPIRICAL

ADDITIVE TERM AND ITS EFFECTS

ON DENOMINATOR

Mach number in meridional plane, M_m	M_m^2	$M_m^2 - 1$	Additive factor	D ni- [illegible] or
0.50	0.25	0.75	0.0001	0.7501
.70	.49	.51	.0006	.5106
.80	.64	.36	.0027	.3627
.90	.81	.19	.0150	.2050
.95	.9025	.0975	.0377	.1352
.97	.9409	.0591	.0554	.1145
.99	.9801	.0199	.0820	.1019
1.00	1.00	.0000	.1000	.1000

TABLE VI – SUMMARY OF COEFFICIENTS FOR POLYNOMIAL R_o/R AS A FUNCTION OF S

Coefficient radius, R_n	Number of terms in coefficient product to the power of R_t since $D_n = -C_n\ nR_t$								
	1	2		4	5	6	7	8	9
	$1\ R_2$	$1\ R_t^2$	$1\ R_t^3$	$1\ R_t^4$	$1\ R_t^5$	$1\ R_t^6$	$1\ R_t^7$	$1\ R_t^8$	$1\ R_t^9$
R_1	D_1								
R_2	D_2	D_1^2							
R_3	D_3	$2D_1D_2$	D_1^3						
R_4	D_4	$2D_1D_3 + D_2^2$	$3D_1^2D_2$	D_1^4					
R_5	D_5	$2D_1D_4 + 2D_2D_3$	$3D_1D_2^2 + 3D_1^2D_3$	$4D_1^3D_2$	D_1^5				
R_6	D_6	$D_3^2 + 2D_1D_5 + 2D_2D_4$	$D_2^3 + 3D_1^2D_4 + 6D_1D_2D_3$	$4D_1^3D_3 + 6D_1^2D_2^2$	$5D_1^4D_2$	D_1^6			
R_7	D_7	$2D_1D_6 + 2D_2D_5 + 2D_3D_4$	$3D_1^2D_5 + 3D_2^2D_3 + 3D_1D_3^2 + 6D_1D_2D_4$	$4D_1^3D_4 + 4D_1D_2^3 + 12D_1^2D_2D_3$	$5D_1^4D_3 + 10D_1^3D_2^2$	$6D_1^5D_2$	D_1^7		
R_8	D_8	$D_4^2 + 2D_1D_7 + 2D_2D_6 + 2D_3D_5$	$3D_1^2D_6 + 3D_2^2D_4 + 3D_2D_3^2 + 6D_1(D_2D_5 + D_3D_4)$	$D_2^4 + 12D_1^2D_2D_4 + 4D_1^3D_5 + 6D_1^2D_3^2 + 12D_1D_2^2D_3$	$5D_1^4D_4 + 20D_1^3D_2D_3 + 10D_1^2D_2^3$	$6D_1^5D_3 + 15D_1^4D_2^2$	$7D_1^6D_2$	D_1^8	
R_9	D_9	$2D_1D_8 + 2D_2D_7 + 2D_3D_6 + 2D_4D_5$	$D_3^3 + 6D_1D_2D_6 + 3D_1^2D_7 + D_2^2D_5 + 3D_1D_4^2 + 6D_1D_3D_5 + 6D_2D_3D_4$	$4D_1^3D_6 + 4D_2^3D_3 + 12D_1^2(D_2D_5 + D_3D_4) + 12D_1D_2^2D_4 + 12D_1D_2D_3^2$	$5D_1D_2^4 + 5D_1^4D_5 + 10D_1^3D_3^3 + 20D_1^3D_2D_4 + 30D_1^2D_2^2D_3$	$6D_1^5D_4 + 30D_1^4D_2D_3 + 20D_1^3D_2^3$	$7D_1^6D_3 + 21D_1^5D_2^2$	$8D_1^7D_2$	D_1^9

END

DATE

FILMED

MAR 11 1982