NASA-TM-82999

NASA Technical Memorandum 82999

NASA-TM-82999 19830016765

Testing and Performance Characteristics of a 1-kW Free Piston Stirling Engine

Jeff Schreiber
Lewis Research Center
Cleveland, Ohio

April 1983

NASA

TESTING AND PERFORMANCE CHARACTERISTICS OF A 1-kW FREE PISTON STIRLING ENGINE

Jeff Schreiber

National Aeronautics and Space Administration
Lewis Research Center
Cleveland, Ohio 44135

SUMMARY

A 1-kW (1.33 hp) single-cylinder free piston Stirling engine was installed and tested in the Lewis laboratory. The engine was designed and built as a research engine with a built-in dashpot loading device. Tests were conducted with two different displacers; one designed for optimum efficiency, the other for optimum power. Engine performance was also tested with two regenerators with two different porosities.

A detailed description of the engine, the instrumentation, the test facilities, and the data system is provided.

This report presents test results plotted as curves of indicated and brake power as a function of power piston stroke, with helium as the working fluid. In addition, engine efficiency is tabulated. The engine was easy to start, operated very reliably, and almost noiselessly.

When the engine was operated for its acceptance test by the manufacturer, it achieved a power output of 1.1 kW (1.96 hp). During the Lewis test operation, no more than 1 kW (1.33 hp) could be achieved, even with a redesigned displacer which, in accordance with the manufacturer's engine simulator model, should have produced 1.4 kW (1.86 hp). Despite diligent investigations of numerous possible causes, without any known changes on the engine or its instrumentation system, the difference in peak output capability could not be explained.

In conclusion, the engine performance measurements were found by cross checks to be consistent and valid, although no reason for the low engine performance was found. The data are, however, being published in an effort to fill the void of free piston Stirling engine data available to Stirling engine investigators. The report also describes the tests performed for these investigations.

INTRODUCTION

A free piston Stirling engine designed for research purposes was obtained in 1979 for testing as part of the NASA Stirling engine technology program at Lewis. The engine, model RE-1000, was designed to optimize engine efficiency at a power output level of 1 kW within the constraints of an existing heater head design. Being a research engine, no usable form of power output was required; thus, a dashpot to absorb the power generated was built into the pressure vessel of the engine. Instrumentation ports at key locations were built into the engine for pressure and temperature measurements of the working fluid.

Some features that made the RE-1000 suitable to be a research engine were the electric resistance heater head, the easy accessibility of areas

for key instrumentation, the quick teardown times possible due to the simplicity of design, and the built-in dashpot load device.

A test matrix was devised to map the engine over a range of heater tube metal temperatures, mean operating pressures, cooling water inlet temperatures, and piston strokes with both helium and hydrogen as the working fluid.

The objective of the test program was to characterize the performance of a free piston Stirling engine, to compare test results with the manufacturer's predictions, and to investigate the influence of various design parameters on engine performance. The engine was operated with helium as the working fluid.

This report covers the engine design, including dimensions and critical clearances and materials; it describes the instrumentation employed, the test facility, and the data system used to record and reduce the test results.

The test data are presented as plots of indicated and brake power as a function of power piston stroke.

APPARATUS AND TEST PROCEDURE

RE-1000 Engine

Background and description. - The RE-1000 engine, as recently tested at Lewis, is shown in figure 1; a cutaway drawing is shown in figure 2. (The engine was designed and fabricated at Sunpower Inc., Athens, Ohio.) The engine was built to be dynamically similar to one built for the solar energy program at the jet propulsion laboratory (JPL) (refs. 1 and 2). The engine was optimized for maximum efficiency with a helium working fluid at 7 MPa (1015 psi) mean operating pressure, a heater tube metal temperature of 600° C (1112° F), an engine frequency of 30 Hz, and a power piston stroke of 2.54 cm (1.00 in.). The design optimization was, however, constrained by the use of a previously designed heater and regenerator assembly. Consequently, the performance of the engine does not represent the best possible overall efficiency for a free piston Stirling engine at the design temperature, pressure, and stroke.

The RE-1000 is a single-cylinder free piston Stirling engine with a posted displacer, annular regenerator and cooler, electric resistance heater head, and a dashpot load device built in the bounce space. The sliding surfaces of the power piston, power piston cylinder, and displacer rod use chrome oxide for wear resistance. The working space is sealed from the bounce space by a nominal 0.033-mm (0.0013-in.) clearance gap between the chrome oxide outer surface of the power piston and the chrome oxide inner surface of the cylinder. Chrome oxide is also used on the outer surface of the displacer rod for wear resistance and for a minimum clearance seal between the working space and the displacer gas spring.

A second displacer and displacer rod were obtained from the manufacturer for the RE-1000. After the engine was delivered and installed in the test cell, the second displacer and displacer rod were optimized for maximum power output within the constraints of the existing engine. The displacer and displacer rod optimized for high efficiency will be referred to as displacer and displacer rod 1, while the displacer and displacer rod optimized for maximum power output will be referred to as displacer and displacer rod 2. The two displacers and rods are shown in figures 3 and 4, with cross sections of the two displacers shown in figures 5 and 6.

Engine parameters and dimensions are given in table I. Instrumentation used on the engine and the supporting systems is listed in table II. Instrumentation locations are shown in figures 7 to 9, with the numbers near the instrumentation locations referring to the items in table II.

Heater and regenerator. - The RE-1000 heater head is shown in figure 10. The heater unit has 34 tubes of Inconel 718 with an outside diameter of 3.175 mm (0.125 in.) and an inside diameter of 2.362 mm (0.093 in.). Each tube is 18.34 cm (7.220 in.) long.

The 34 tubes are used to form an electric resistance heater. The current travels along two power tabs to a bus bar on the heater which connects the midpoints of 17 of the 34 tubes. The flow of current from the bus bar, through the tubes to the cylinder head area, generates heat. Heat is likewise generated in the other 17 heater tubes as the current flows away from the head, through the tubes, to another bus bar and its power tabs, back to the electric power supply. The power supply units will be discussed later in the report.

Each heater tube connects to the expansion space with the hot end of the regenerator. The regenerator volume is an annular gap between the outside surface of the displacer cylinder wall and the inside surface of the gas-pressure containing wall which is filled with a knitted 304 stainless steel maxtrix produced by Metex Corp. of Edison, New Jersey. The matrix structure is much like a metallic rope with a square cross section. The design porosity of the regenerator was 76 percent. The regenerator matrix is shown in figure 11.

Cooler. - The cooler unit (figs. 12 and 13) has an annular design. The gas flow path consists of 135 rectangular passages equally spaced around the displacer cylinder. Each channel is 0.508 mm (0.020 in.) wide, 3.76 mm (0.148 in.) deep, and 79.2 mm (3.118 in.) long. The cooling water flows through passages in the cooler housing parallel to the gas flow path. All components in the cooler assembly are aluminum, which enhances the heat transfer. The cylindrical gas-passage fin module is press fit into the cooler housing to insure high heat conduction. The stainless steel displacer cylinder requires a light press fit into the aluminum-finned unit.

Displacer. - Figures 3 and 4 show both pairs of displacers and displacer rods. Each displacer contains its own gas spring. The cold end provides mounts for the antirotation rod and displacer position measurement rod. The displacer position measurement rod extends into a linear voltage differential transformer (LVDT) built inside the power piston to measure the displacer position relative to the power piston position; this will be described in the section on instrumentation. The antirotation rod prevents the displacer from becoming rotationally misalined with respect to the power piston.

The stainless steel displacer rods are also coated with chrome oxide for wear resistance. The rod is supported by the mounting spider located on one end of the rod. A small Rulon bushing is fit into one of the three legs of the spider to guide the displacer antirotation rod. A hardened stainless steel sleeve, into which the displacer rod fits, is located inside of the displacer (figs. 5 and 6). On the end of the sleeve an enclosed volume is attached to form a gas spring against which the displacer rebounds. Communication of the working space with the displacer bounce space is prevented by the close fit of the sleeve in the displacer and the displacer rod.

The displacer must also seal the expansion space from the compression space during engine operation. This is accomplished with a single molybdenum disulfide impregnated Teflon ring with no backup ring to provide a pre-

load. The Teflon ring, shown in figures 3 and 4, has a cross section of 3.00 mm (0.118 in.) by 2.82 mm (0.111 in.).

The two displacers and rods differ slightly in design. Displacer and displacer rod 1 were designed to operate with a phase angle of 45° between the displacer and piston positions and to produce a displacer stroke equal to the piston stroke. The second displacer and displacer rod combination was designed to operate with a phase angle near 80°, but the displacer was to have a slightly greater stroke than the power piston.

Displacer rod 1 was 1.663 cm (0.6548 in.) in diameter, while the bore of the displacer rod cylinder inside of the displacer was 1.666 cm (0.6558 in.). The length of the seal gap along the displacer rod is 9.366 cm (3.688 in.) at midstroke. Displacer rod 2 was 1.808 cm (0.7120 in.) in diameter, while the bore of the displacer rod cylinder inside of the displacer was 1.811 cm (0.7130 in.).

Displacer rod 2 was designed to permit the dynamic gas-pressure measurement in the small gas spring built inside of the displacer; figure 14 shows how the displacer rod was fabricated to permit this measurement. The attenuation of the pressure signal caused by the passageways in the displacer rod is negligible, but a slight phase shift is produced. At the design conditions of the engine, the phase shift produced is approximately 0.5°. The analog data system has the capability to correct the phase shift before data reduction calculations are performed.

Power piston. - The power piston is shown in figure 15 and can be seen inside of the engine in figure 16. The main body of the piston is made of aluminum with a chrome oxide coating for wear resistance, while the mass attached to the end is fabricated from carbon steel. During operation the power piston is kept from rotational movement by a stationary antirotation rod, which prevents misalinement of the piston position LVDT and piston velocity linear velocity transducer (LVT). A Rulon bushing in the carbon steel piston mass serves to minimize rod friction.

Three protrusions are on the end of the power piston toward the compression space. These three sections extend through the spider to reduce dead volume when the power piston is at the inward end of its stroke.

The power piston seals the bounce space from the working space with a clearance seal. Its cylinder is coated with chrome oxide, as is the surface of the power piston. The inside of the cylinder measures 57.21 mm (2.2524 in.), and the outside of the power piston measures 57.19 mm (2.2514 in.). The length of the surface which provides the seal is 152.5 mm (6.00 in.) at midstroke.

The power piston in the RE-1000 weighs 6.2 kg (13.7 lb), which gives a mass ratio of 14.6:1 between the power piston and displacer 1. Since the power piston has a substantially greater mass than the displacer, the operating frequency of the engine will be dictated by the power piston mass and the gas spring formed by helium working fluid in the working space; a forcing function is caused by the pressure fluctuation of the working fluid. The spring effect of the engine's bounce space on the power piston is negligible when compared with the spring effect of the working space on the power piston, since the volume of the bounce space is roughly 100 times greater than the volume of the working space.

Centering port systems. - Since the free piston Stirling engine has no kinematic linkage to constrain the motions of the power piston or displacer, a system is required to insure that the midpoints of the strokes of the power piston and displacer remain at some fixed distance relative to each other, and that the piston and/or displacer does not drift, as the engine

runs, due to preferential leakage directions. In the RE-1000 a system of ports is used to locate the center of the power piston and displacer strokes.

When the piston is at midstroke, a small port in the power piston is alined with a small port in the cylinder wall. These ports are connected to passages which allow the working space to communicate with the bounce space when the piston is at midstroke, so no pressure differential may exist. The centering port system for the power piston has been very effective and trouble free.

The system for centering the displacer motion works in a similar manner, except the passage for the gas communication is slightly more complex. When the displacer is at the midpoint of its stroke, a port on the side of the displacer rod becomes alined with a port on the wall of the sleeve inside of the displacer. When these two ports are alined, the small bounce space in the displacer can communicate with the large bounce space in the pressure vessel, which remains near the mean operating pressure of the engine throughout each cycle. The passage in the displacer rod extends through the center of the rod to the spider and continues out one leg of the spider through a stainless steel tube to the large bounce space. The ports, the passageway inside of the displacer, and the stainless steel tube which indexes into the spider can be seen in figure 2.

The main bounce-space pressure swing is small, since it contains a large volume of gas. The change in volume of the bounce space is the power piston area times the power piston stroke (65.2 cm^3 at design conditions). This is only 0.3 percent of the volume of the large bounce space, which is about 20 500 cm^3 (1250 in^3).

Loading device. - One of the key features of the RE-1000 as a research engine is the built-in power-absorbing device. The power is absorbed by a dashpot contained in the uppermost section of the bounce-space pressure vessel. The dashpot is shown in figures 2 and 16. The dashpot consists of a carbon piston in a stainless steel cylinder with the top end of the cylinder sealed by a plate with a tapered hole in the center. A tapered valve stem is operated by an electric motor to change the effective size of the hole. As the carbon piston moves into or out of the cylinder, it must pump gas in the engine's bounce space back and forth through the orifice in the plate. By adjusting the effective size of the orifice, the load on the engine is altered. The work expended in pumping the gas through the orifice is converted into heat, which is removed from the dashpot by cooling water circulated around the dashpot.

A connecting rod transmits the force from the power piston of the engine to the carbon piston of the load device. A force transducer is built into the connecting rod. The force measurement is used to calculate the brake power output of the engine, as will be covered in the section on instrumentation.

Facility and System Description

Figure 7 contains a schematic of the test cell support systems for the RE-1000. Systems shown include the gas pressurization system, dashpot and engine cooling water systems, and the electric power supply system for the heater head.

The gas pressurization system has the capability to charge the engine with helium or hydrogen. The supply system charges and discharges the working and bounce spaces through check valves (fig. 7). The flow of gas into and out of the engine is controlled by motorized needle valves on the supply

line and vent line. To start the engine, a pair of solenoid valves alternately connects the high-pressure supply line of the low-pressure vent line directly to the working space. A short-circuit valve connects the working space to the bounce space to stop the oscillation of the power piston in the event of an emergency.

The dashpot cooling water system is used to remove the heat generated in the dashpot as it absorbs the power output of the engine. The water inlet temperature, outlet temperature, temperature difference, and flow rate are measured. The amount of heat gained by the cooling water is an approximation of the engine power output, although it is generally higher than the actual power output of the engine. This discrepancy is caused by the low water inlet temperature, which permits heat absorption from other sources.

The engine cooling water system is designed to control water inlet temperature. As in the dashpot cooling system, the inlet temperature, outlet temperature, temperature difference, and water flow rate are measured. The heat rejected by the cooler can therefore be calculated.

The engine heater power supply system consists of two Sorensen electric power supplies connected in parallel. Each power supply unit has the capability of delivering 1000 A at 20 V of direct current power. Due to the low electrical resistance in the heater head, the power supplies were connected in parallel to take advantage of the 2000-A capability. The two power supplies are regulated by an automatic controller which uses a thermocouple on one of the heater tubes for feedback.

Instrumentation

Figures 7 to 9 show the instrumentation on the RE-1000 and measurements made on the related support systems. All of the temperatures were read with type K (Chromel-Alumel) thermocouples. Twelve heater tube temperatures were recorded for data use; their average was used to set the desired test conditions. Six of the heater-tube temperatures were measured at the quarter-length point toward the expansion space, while the other six temperatures were measured at the quarter-length point toward the regenerator (fig. 9). Thermocouples were also installed on the outside surface of the regenerator wall to aid in the calculation of conduction losses. Locations of the regenerator wall thermocouples are also shown in figure 9.

Dynamic pressure measurements are made both in the compression space and the bounce space. The measurement of dynamic compression space pressure is used to calculate indicated power, as will be described in another section. Dynamic pressure differentials across the cooler, regenerator, displacer, and power piston are also measured to aid in the analysis of flow-loss calculations. A complete list of measured parameters, along with a description and range, is given in table II.

Displacer position, power piston position, and power piston velocity are also measured for data reduction purposes. The power piston position and velocity are measured directly by a LVDT and a LVT, respectively. The displacer position cannot be measured directly, since the displacer is completely enclosed in the working space with no kinematic linkage to the bounce space. The displacer position is actually measured relative to the piston position with the core of the LVDT attached to the displacer and the windings installed inside of the power piston. The excitation input signal to the LVDT and the relative displacer position output signal from the LVDT are carried along four small braided wires with Teflon insulation and supported by a piece of music wire 0.254 mm (0.010 in.) in diameter. The four

instrumentation wires and the supporting music wire were encased by a braided sheath with shrink tubing applied at each end to secure the assembly. The wire assembly installed in the engine, with the wire ends connected to terminal strips, can be seen in figure 16. This method was reliable for transmitting the relative displacer position signal from the moving power piston to a stationary support. Care was required, however, in clamping the ends of the music wire to minimize the stress put on the signal wires during operation.

To obtain the absolute displacer position signal, the power piston position signal and the displacer position relative to the power piston signal are used as inputs to an electronic circuit which subtracts the power piston position signal from the relative displacer position signal. The resulting output is the absolute displacer position signal, which is then used in the data recording and data reduction program. Electronic circuits located in the control room use the power piston and absolute displacer position signals to calculate the piston and displacer strokes. These stroke values are displayed in the test cell's control room and are recorded by the data system.

A crystal-type force transducer is mounted in the linkage connecting the power piston to the dashpot load device. Since the force transducer moves with the power piston, a system of flexing wires must be used to send the force transducer's output signal to the data system, as was done with the displacer position signal. This dynamic measurement of the resistance force applied to the power piston from the dashpot is used in electronic analog circuitry, along with the piston velocity signal, to calculate the brake power output using the equation

$$\text{brake power} = \frac{FV \cos \theta}{2}$$

where

F amplitude of the force signal

V amplitude of the piston velocity signal

θ phase angle between F and V signals

The indicated power output of the engine is calculated in a similar manner to that used for the brake power output; the dynamic compression space pressure, along with the piston velocity, is used as an input to the electronic circuits. The dynamic compression space pressure is measured with a crystal type fast-response pressure transducer. The equation used is

$$\text{indicated power} = \frac{PA_pV \cos \theta}{2}$$

where

P amplitude of the compression space signal

A_p area of the power piston

V amplitude of the piston velocity signal

θ phase angle between the P and V signals

Both the brake power output and indicated power output calculations are displayed in the control room and recorded by the data system.

Two phase-angle meters were used to determine the phase relationships of key parameters. The phase angles were not recorded by the Escort system

for each data point; however, some phase relationships are reported in the results.

Data System

Digital steady-state system (Escort). - The data system used in the RE-1000 free piston Stirling engine test program is known as the Escort system. The escort system is a minicomputer-based digital data recording and display system intended for steady-state use. The sampling rate of approximately 5000 samples/sec permits the use of multiple scans, which are averaged for each data point recorded. The free piston Stirling engine data system uses five scans of data recorded over a 15-sec period. Calculations are performed to indicate the statistical variation of each channel recorded over the total number of scans.

The Escort system has the capability to perform conversions from millivolt signals to engineering units and to display the values on selected light-emitting diodes (LED) and preprogrammed cathode ray tube (CRT) displays. The LED's can be seen on the control panel in figure 17 along with the CRT displays overhead. The Escort system can perform online calculations of the steady-state parameters and display the calculations on the continually updated LED's or CRT's. A listing of the calculated parameters is given in table III. Printouts of any of the CRT displays can be obtained from a printer located in the control room. The Escort system terminal and the printer can be seen in figure 17. The Escort system can also perform limit checking. When predetermined limits are exceeded, the system can give a warning or initiate a preprogrammed sequence of events. Further information on the Escort system can be obtained from reference 3.

Frequency-modulated (FM) system. - An analog data recording system is utilized to record data involving the thermodynamics of the engine cycle. The data are recorded on a 14-track, high-speed FM tape recorder which has the capability to multiplex up to 150 channels of data. Several processing techniques are employed with the free piston Stirling engine data.

For the free piston engine, 100 cycles of engine operation are used for the data reduction program. The FM tape-recorded data is digitized at a rate of 254 points per cycle. The 100 cycles are then averaged to produce one typical engine cycle at the set operating conditions. From the digitized data, calculations may be performed on a digital computer and plots of a data channel versus time or one data channel versus another may be generated.

Test Procedure

Startup. - The RE-1000 engine installed in the test cell is shown in figure 1. Before engine startup, a calibration of the pressure transducers was performed automatically by the Escort data system. The engine was then purged of air by alternate pressure-vent cycles of the working and bounce spaces. Next the engine was pressurized with helium to 5.5 MPa (800 psig). Cooling water flow rates were set for the engine and dashpot coolers. The electric power supplies were then turned on and the heater head was brought up to an average heater-tube temperature of 600° C (1112° F).

With the dashpot-load control valve fully open, the piston and displacer were stroked with the starter system. As soon as the engine began to operate without the starter-system pressure pulses, an isolation valve was

closed, eliminating the starter from contributing to the dead volume of the working space.

As the engine stabilized, the mean cycle pressure was brought up to 7 MPa (1015 psig). After typically only 1 or 2 min of operation, all measured temperatures had reached steady state. (The short transient period is the result of low thermal insertion, including the absence of an oil lubrication system.) Data were taken with constant heater temperature, cooler temperature, and pressure and with the stroke of the power piston varied from 1.2 cm (0.47 in.) to 3.0 cm (1.18 in.). The stroke of the power piston was varied by regulating the size of the remote-control needle valve orifice in the dashpot, which adjusted the resistance applied to the power piston motion.

Data recording. - When the desired operating conditions of the engine were reached, the data recording process was initiated. Frequency-modulated data were recorded for 10 to 15 sec on the high-speed magnetic tape. These data are later processed by digital computer for the data reduction program. Five scans of the steady-state Escort system data were also recorded simultaneously with the FM data. If all measured parameters appeared reasonable, the engine was then set to attain the next data point.

RESULTS AND DISCUSSION

The testing of the RE-1000 free piston Stirling engine at Lewis verified the engine to be very reliable. Most problems encountered during operation were caused by the force transducer, the displacer LVDT, and their associated flexing wires. A failure would not prevent or degrade engine operation, but merely cause the loss of the signals to the data system.

During the engine tests at Lewis, the RE-1000 produced only 70 to 80 percent of the design power output. Figure 18 shows the computer predicted design brake-power output levels plotted as a function of power-piston stroke for four heater-head temperatures. Before delivery to Lewis, the engine operated at or better than the design points. Many areas of the engine were examined as potential causes of the poor engine performance; however, the power output was not brought back to the design level achieved under the contract's acceptance test.

At a given power-piston stroke, the displacer stroke would only be 80 to 90 percent of its proper value and the phase angle between the displacer and the power piston was about 60°, instead of the design value of 45°. The pressure amplitude in the compression space was at a level also obtained during the acceptance test. Its phase angle, however, with respect to the power piston position, was only 10 to 12°, instead of the design phase angle of 20 to 25°. Data points for these tests are given in table IV. Escort points 177 to 187 give the data with the heater head at 550° C (1022° F) and Escort points 189 to 199 give the data with the heater head at 600° C (1112° F). Figures 19 and 20 show the brake power and indicated power for these data points.

One possibility checked for the reduced power was leakage past the power piston. This leakage was checked by measuring the half life of the pressure in the working space, with the working space charged with helium to a pressure of approximately 5 MPa (725 psi). During the test the bounce-space pressure vessel was removed and the power piston was locked near mid-stroke. The helium supply line was shut off, and the time was measured for the working-space pressure to drop to 2.5 MPa (363 psi), one half of the initial pressure.

The time measured for the leakage was usually about 14 sec, which indicates an acceptable seal based upon past experience. The power-piston outside diameter and power-piston-cylinder inside diameter were measured and found to have experienced almost no wear since initial measurements when new.

Displacer gas spring leakage was also investigated. This leakage was checked by measuring the displacer-rod outside diameter and the inside diameter of the bore in the displacer. Once again the wear was negligible, about 0.0003 cm (0.0001 in.) on the diameter. A fixture was made to pressure check the welded joints in the gas-spring volume inside of the displacer to test for leakage in the gas spring. The gas spring was pressurized to 0.75 MPa (109 psi) with helium, but no leakage was detected.

Damping of the displacer motion by the Teflon sealing ring around the displacer was also thought to be a possible source of the poor performance. Two new Teflon rings were made, one with the original design gap at the end of the ring and the other with about twice the design end gap. Both were tested in the engine, with no noticeable difference in overall performance between any of the three rings. As a further check, the engine was run without any ring on the displacer to seal the expansion space from the compression space. Although it was slightly difficult to start the engine and the efficiency was somewhat lower than usual, the engine power output was generally unchanged; therefore, excessive friction from the Teflon ring on the displacer was apparently not the cause of the reduced engine performance.

At this point in testing, displacer and displacer rod 2, designed for power (rather than efficiency) optimization, were received from the engine builder. Their validated computer code indicated that the new displacer and displacer rod, when put in the engine, should produce about 1400 W, with a phase angle of about 80° between the power piston and displacer. Sunpower computer code predicted that with this configuration, the stroke of the displacer should exceed the stroke of the power piston instead of being equal, as in the first configuration.

The new displacer was installed in the engine and tested. Under these conditions the engine was able to produce about 1000 W, not the 1400 W predicted. The measured phase angle between the displacer and power piston was about 90°, and the displacer stroke was still shorter than the power piston stroke. At small power-piston strokes, about 1.7 cm (0.67 in.), the displacer stroke was almost 90 percent the length of the power-piston stroke; at longer power-piston strokes, about 2.7 cm (1.06 in.), the displacer stroke would only be about 76 percent the length of the power-piston stroke; the explanation for this is unknown. A plot of engine performance is given in figure 21.

Viscous damping caused by high flow losses in the heat exchangers was investigated next. A test plan was devised to make pressure-drop measurements through the heat exchangers. A flow-test fixture was designed and fabricated for use with nitrogen at elevated pressures. The test operation and instrumentation is described in the appendix. Results of the flow tests with the 139-g (0.31-lb) regenerator are given in figure 22.

Although the flow tests did not indicate an excessively high total pressure drop through the heat exchangers, the regenerator porosity was increased by reducing the mass of knitted wire installed in the regenerator in order to lower the total pressure drop and thereby observe the engine's sensitivity to pressure drop. The engine operates at a constant frequency of 30 Hz, primarily dictated by the power-piston mass and working-space volume and pressure; the natural frequency of the displacer is in the range of 27 to 29 Hz. Consequently, the displacer is being driven by the 30-Hz

working-space pressure wave slightly above its own natural frequency. When an object is being driven above its natural frequency and the damping of its motion is decreased, the amplitude of oscillation will increase and the phase angle between the driving force and the object in motion, represented by φ in figures 23 to 25, will increase (ref. 4). As can be seen in figures 23 to 25, the driving force on the displacer is 180° out of phase from the working-space pressure wave and therefore, when the phase angle between the driving force and the displacer motion is increased, the phase angle between the power-piston motion and the displacer motion will decrease. In figures 24 and 25, φ is between 0 and 90°, which could indicate that the natural frequency of displacer 2 is actually above the 30 Hz of the forcing function. Figure 23 shows the phase relationship of the engine operating as designed. Data taken during operation at these conditions before delivery to Lewis is given in table V. Phasor diagrams are also presented for operation at Lewis with the 139-g regenerator (fig. 24), corresponding to Escort data points 383 to 391, and for operation with the 99-g regenerator (fig. 25), corresponding to Escort data points 407 to 412.

With the 99-g regenerator the displacer stroke became 87 percent of the power-piston stroke when operating at a power-piston stroke of about 1.7 cm (0.67 in.), and 73 percent at a power-piston stroke of about 2.7 cm (1.06 in.). The important parameters are summarized as follows:

Power-piston stroke	Displacer stroke as percentage of piston stroke	
	99-g (0.22-lb) regenerator	139-g (0.31-lb) regenerator
1.7 cm (0.67 in.)	90 percent	87 percent
2.7 cm (1.06 in.)	76 percent	73 percent

The phase angle of the displacer with respect to the power piston was approximately 83°. The change in damping on the displacer motion, therefore, tended to alter the displacer-position phase angle, but not the displacer amplitude. Engine performance with the 99-g (0.22-lb) regenerator is given in figure 26. Pressure drop data are given in figure 27.

Throughout the testing at Lewis, the pressure swing in the compression space was always very near the design pressure swing, but its phase relationship with respect to the power piston position was not as designed. The indicated power equation used is linearly proportional to the sine of the compression-space pressure phase angle. (Note that the sine of the angle between the compression-space pressure and the power-piston position is equal to the cosine of the angle between the compression-space pressure and the power-piston velocity vector.) Since the compression-space pressure phase angle is generally low, any deviation from the design phase angle will have a substantial effect on the power produced.

As a result of budgetary constraints, further diagnostic tests to fully determine why design power levels could not be attained during testing at Lewis were not run. Another area of interest that should be investigated in future free piston testing is the amount of work lost by hysteresis in the

gas springs. Displacer and displacer rod 2 were designed and instrumented to provide the necessary measurements.

Under contract number NAS3-22230 a hydraulic output conversion for the RE-1000 engine has been designed by Foster-Miller Associates. A concept was selected using an annular metallic diaphragm to separate the engine working-space gas and the hydraulic fluid. As was the original design of the engine, this conversion is being designed with research capabilities in mind.

CONCLUDING REMARKS

During the test program at Lewis, the RE-1000 was found to possess all of the desirable qualities generally attributed to free piston Stirling engines. The engine operated at an extremely low noise level and with high reliability. The overall layout made the engine easy to work on and ideal for research. Complete tear down and reassembly took about half a day.

One of the most valuable features of a free piston engine is the absence of dynamic seals between the high-pressure working fluid and atmosphere. During operation very little loss of the working fluid was experienced. In production a hermetically sealed engine would be used, and thus no leakage problems would exist.

The fact that the engine operated consistently below design power levels after delivery to Lewis is cause for concern, as the engine did operate at or better than design predictions while at the fabricator's shop. Many potential problem areas were investigated, but no cure for the low power output was found.

The limited test program still provides some useful test data, along with engine parameters and characteristics, to help evaluate and understand a free piston Stirling engine operation. Data are given for the engine before delivery to Lewis, for tests at Lewis with the original displacer and 139-g (0.31-lb) regenerator, for the high-power displacer 2 and 139-g (0.31-lb) regenerator, and for the high-power displacer and 99-g (0.22-lb) regenerator. Complete flow-test data are given for the heat exchangers with both the 139-g (0.31-lb) and the 99-g (0.22-lb) regenerators.

APPENDIX

Heat-Exchanger Flow Tests

Steady-state flow tests were performed on the RE-1000 heater, regenerator, and cooler for both the 139-g regenerator and the 99-g regenerator to determine the pressure-drop-versus-mass-flow-rate characteristics. The tests were run with nitrogen at mass flow rates that gave approximately the same Reynolds number as actually occur in the engine during operation. The inlet temperature of the nitrogen varied from 11.5° to 22.3° C (52.7° to 72.1° F).

The pressure drops were measured with the Validyne ΔP transducers mounted on the engine for use on the FM high-speed magnetic tape system. Both the cooler and regenerator pressure drops were measured directly; however, the heater pressure drop was found by measuring the total heater-head pressure drop and subtracting the cooler and regenerator pressure drops.

The tests were run by setting the inlet pressure to the expansion space at some constant pressure and regulating the outlet pressure from the compression space to adjust to the desired mass flow rate. The cooler and regenerator flow tests were done at an inlet pressure of 2070 kPa (300 psi); the heater test was done at 1380 kPa (200 psi). The mass flow rates were measured by venturi-type flow meters. Results of the flow tests are plotted in figures 22 and 27.

REFERENCES

1. Dochat, George: 1-kW Solar Stirling Engine - Alternator Final Test Report. MTI 79TR71, Mechanical Technology Incorporated, Sept. 1979.
2. Giandomenico, Anthony: 1-kW Solar Stirling Experiment Final Report. JPL Publication 81-38, Jet Propulsion Lab, NASA Contract NAS7-100. NASA CR-164530.
3. Miller, R.L.: Escort: A Data Acquisition and Display System to Support Research Testing. NASA TM-78909, 1978.
4. Timoshenko, S.; Young, D.H.; and Weaver, W., Jr.: Vibration Problems in Engineering. 4th ed., John Wiley and Sons, 1974.

TABLE I. - DESCRIPTION OF GEOMETRY FOR RE-1000 FREE PISTON STIRLING ENGINE

DIMENSIONS AND PARAMETERS

Number of cylinders	1
Type	free piston with dashpot
Working fluid	helium
Design frequency, Hz	30
Design pressure, mPa	7.0
Design power, W	1000
Design phase angle, deg	45
Cylinder bore, cm (in.)	5.723 (2.2527)
Maximum displacer stroke, cm (in.)	4.04 (1.591)
Maximum power piston stroke, cm (in.)	4.20 (1.654)
Cooler	
description	135 rectangular passages
passage width, cm (in.)	0.0508 (0.020)
passage depth, cm (in.)	0.376 (0.148)
length, cm (in.)	7.92 (3.118)
flow area, cm^2 (in^2)	2.58 (0.400)
wetted perimeter, cm (in.)	115.2 (45.354)
volume, cm^3 (in^3)	20.42 (1.246)
Heater	718I tubes
description	tubular
tube length, cm (in.)	18.34 (7.220)
tube inside diameter, mm (in.)	2.362 (0.093)
tube outside diameter, mm (in.)	3.175 (0.125)
number of tubes	34
design maximum wall temperature, °C (°F)	650 (1202)
Regenerator	
length containing wire mesh, cm (in.)	6.446 (2.538)
outside diameter cm (in.)	7.18 (2.827)
inside diameter, cm (in.)	6.07 (2.390)
MATRIX	304SS METEX
wire diameter, μm (in.)	88.9 (0.0035)
porosity, percent	75.9
weight, g (lb)	139 (0.31)
Pistons	
power piston mass, kg (lb)	6.2 (13.67)
displacer mass, kg (lb)	0.426 (0.94)
piston diameter, cm (in.)	5.718 (2.2514)
displacer diameter, cm (in.)	5.67 (2.232)
displacer rod diameter, cm (in.)	1.663 (0.655)
piston length, cm (in.)	28.0 (11.024)
displacer length, cm (in.)	15.19 (5.980)

TABLE I. - Concluded.

Dead volumes	
expansion space to heater tube junction, cm^3 (in^3)	3.80 (0.23)
heater tube to regenerator plenum junction, cm^3 (in^3)	5.90 (.36)
regenerator plenum at hot end of regenerator, cm^3 (in^3)	4.10 (.25)
regenerator plenum ring, cm^3 (in^3)	.83 (.05)
displacer/cylinder annular ring, cm^3 (in^3)	10.06 (.61)
auxiliary instrument port (hot), cm^3 (in^3)	1.56 (.10)
regenerator plenum at cold end of regenerator, cm^3 (in^3)	4.23 (.26)
regenerator plenum ring, cm^3 (in^3)	.83 (.05)
cooler plenum at compression space, cm^3 (in^3)	7.15 (.44)
cylinder ports, cm^3 (in^3)	1.21 (.07)
heater flange fittings, cm^3 (in^3)	3.41 (.21)
piston/spider clearance, cm^3 (in^3)	38.7 (2.36)
annular ring around spider, cm^3 (in^3)	3.82 (.23)
DCDT core, cm^3 (in^3)	.79 (.05)
gas spring midport hardware, cm^3 (in^3)	8.31 (.51)
auxiliary instrument ports (Regen/cooler), cm^3 (in^3)	.93 (.06)
auxiliary instrument ports (compression), cm^3 (in^3)	3.15 (.19)
cooler, cm^3 (in^3)	20.42 (1.23)
regenerator, cm^3 (in^3)	49.42 (3.02)
heater, cm^3 (in^3)	26.50 (1.62)
Materials	
heater head	
regenerator outer cylinder	316SS
expansion space dome	316SS
regenerator inner wall cylinder	304SS
displacer	321SS
cooler	6061-T6 Al
cylinder:	
power piston	6061-T6 Al with chrome oxide coating
displacer	304SS with chrome oxide coating
piston body	6061-T6 Al with chrome oxide coating
Design clearances (diam)	
displacer rod/rod cylinder, μm (in.)	25.4 (0.0010)
displacer body/displacer cylinder, μm (in.)	381.0 (0.015)
power piston/piston cylinder, μm (in.)	33.0 (0.0013)
Displacer gas spring	
design mean volume, cm^3 (in^3)	31.79 (1.94)
piston diameter, cm (in.)	1.633 (0.65)

TABLE II. - RE-1000 INSTRUMENTATION

Item	Mnemonic	Parameter	Range	Instrument	S S	F M
1	MEANCP	Mean compression space pressure, MPa	0 - 13.8	Strain gage transducer	X	X
2	MEANBP	Mean bounce space pressure, MPa			X	
3	PRESUP	Gas supply pressure, MPa			X	
4	T01HTR	Heater tube metal temp., °C	400 - 825	Thermocouple	X	X
5	T02HTR	Heater tube metal temp., °C			X	X
6	T03HTR	Heater tube metal temp., °C			X	X
7	T04HTR	Heater tube metal temp., °C			X	X
8	T05HTR	Heater tube metal temp., °C			X	
9	T06HTR	Heater tube metal temp., °C			X	
10	T07HTR	Heater tube metal temp., °C			X	
11	T08HTR	Heater tube metal temp., °C			X	
12	T09HTR	Heater tube metal temp., °C			X	
13	T10HTR	Heater tube metal temp., °C			X	
14	T11HTR	Heater tube metal temp., °C			X	
15	T12HTR	Heater tube metal temp., °C			X	
16	T03HED	Head metal temp., °C			X	
17	T13REG	Regenerator-vert. profile, °C			X	
18	T14REG	Regenerator-vert. profile, °C			X	
19	T15REG	Regenerator circumferential profile, °C	250 - 825		X	
20	T16REG	Regenerator circumferential profile, °C			X	
21	T17REG	Regenerator circumferential profile, °C			X	
22	T18REG	Regenerator circumferential profile, °C			X	
23	T19REG	Regenerator vertical profile, °C	20 - 250		X	
24	TGBOUN	Bounce space gas temp., °C	20 - 80		X	
25	TGCOMP	Compression space gas temp., °C	20 - 250		X	X
26	TGREGC	Regenerator - cooler gas temp., °C	20 - 250		X	
27	TGREGH	Regenerator - heater gas temp., °C	250 - 825		X	
28	TGEXP	Expansion space gas temp., °C	250 - 825		X	X
29	TWINDP	Dashpot cooling water inlet temp., °C	10 - 70		X	X
30	TDLDP	Dashpot cooling water delta temp., °C	0 - 20		X	X
31	TWODP	Dashpot cooling water outlet temp., °C	0 - 75		X	
32	TWINCL	Cooler water inlet temp., °C	10 - 70		X	X
33	TDLCL	Cooler water delta temp., °C	0 - 20		X	X
34	TWOCL	Cooler water outlet temp., °C	0 - 75	Thermocouple	X	
35	AMPS1	Heater amps, power supply 1, A	0 - 1000	Ammeter	X	X
36	AMPS2	Heater amps, power supply 2, A	0 - 1000	Ammeter	X	X
37	VOLTG	Heater voltage, V	0 - 20	Voltmeter	X	X
38	FLODP	Dashpot cooling water flow, l/min	0 - 10	Turbine flowmeter	X	X
39	FLOCLR	Engine cooling water flow, l/min	0 - 10	Turbine flowmeter	X	X
40	VX1HOR	Horizontal vibration, cm/sec	0 - 3.8	Accelerometer	X	
41	VY1VER	Vertical vibration, cm/sec	0 - 3.8	Accelerometer	X	
42	PISTST	Piston stroke, cm	0 - 4	Strokemeter	X	
43	DISPST	Displacer stroke, cm	0 - 4	Strokemeter	X	
44	INDPWR	Indicated power, kW	0 - 3	Integration circuit	X	X
45	PWROUT	Brake power, kW	0 - 3	Integration circuit	X	X
46	FPIST	Piston force, N	0 - 1600	Force transducer		X
47	XPIST	Piston position, cm	±2	LVDT		X
48	XDOTP	Piston velocity, m/sec	0 - 8	LVT		X
49	XDISP	Displacer position, cm	±2	LVDT		X
50	PDYNB	Dynamic bounce space pressure, MPa	0 - 10	Strain gage transducer		X
51	PDYNC	Dynamic compression space pressure, MPa	±2	Crystal transducer		X
52	PDLPST	Piston delta pressure, kPa	±700	Differential pressure		X
53	PDLCLR	Cooler delta pressure, kPa	±70	transducer		X
54	PDLREG	Regenerator delta pressure, kPa	±350			X
55	PDLDIS	Displacer delta pressure, kPa	±520			X

TABLE III. - RE-1000 CALCULATIONS

MNEMONIC	PARAMETER
PWRIN	Electric power input to heater head
QCOOLR	Heat input to engine cooling water
QDSHPT	Heat input to dashpot cooling water
EXTEFF	Engine efficiency based on brake power output and heater power input
TAVHTR	Average heater temperature
INTEFF	Engine efficiency based on brake power output and QCOOLR plus brake power output used as input
AMPS	Total amperage to heater head
QDISPG	Displacer gas conduction
QDISP	Displacer body conduction
QREG1	Outer regenerator wall conduction based on TI8REG and T19REG
QREG2	Outer regenerator wall conduction based on T14REG and T19REG
QREG3	Inner regenerator wall conduction based on TGREGH and TGREGC
PWROUT	Brake power output, analog calculation
INDPWR	Indicated power output, analog calculation
PISTST	Power piston stroke
DISPST	Displacer stroke

TABLE IV. - RE-1000 FREE PISTON STIRLING ENGINE TEST D001

(A) READING 177

SERIES 8 FLUID HYDROGEN BAROM 14.352 PSI

HEAT TO DASHPOT COOLING		POWER IN	ENGINE CHARGE PRESSURE	GAS TEMPERATURES	SURFACE TEMPERATURES
FLODP	3.20 L/MIN		PRESUP 6375. KPA	TGEXP 498.2 DEG.C	T01HTR 535.5 DEG.C
					T02HTR 549.5 DEG.C
TWINDP	20.9 DEG.C	VOLTG 2.54 VOLTS	MEANBP 6969. KPA	TGREGH 490.7 DEG.C	T03HTR 534.1 DEG.C
TDLDP	2.46 DEG.C		MEANCP 6979. KPA	TGREGC 98.8 DEG.C	T04HTR 561.9 DEG.C
TWODPR	23.2 DEG.C			TGCOMP 45.5 DEG.C	T05HTR 513.8 DEG.C
				TGBOUN 33.1 DEG.C	T06HTR 536.8 DEG.C
					T07HTR 543.9 DEG.C
					T08HTR 562.8 DEG.C
					T09HTR 531.2 DEG.C
HEAT TO COOLER		CALCULATED PARAMETERS	VIBRATION	REMOTE CALCULATIONS	T10HTR 617.8 DEG.C
FLOCLR	4.03 L/MIN	1	VX1HOR 0.1 CM/S	PWROUT 406. WATTS	T11HTR 548.1 DEG.C
TWINCL	30.5 DEG.C	2 QCOOLR 1791. WATTS	VY1VER 1.6 CM/S	INDPWR 436. WATTS	T12HTR 534.2 DEG.C
TDLCL	6.41 DEG.C	3 QDSHPT 548. WATTS		PISTST 1.69 CM	
TWOCLR	36.18 DEG.C	4		DISPST 1.70 CM	
		5 TAVHTR 547.5 DEG.C			T13REG 498.6 DEG.C
		6 INTEFF 17.8 %			T14REG 470.4 DEG.C
		8 AMPS 1113. AMPS			T15REG 369.4 DEG.C
		9 QDISPQ 3. WATTS			T16REG 347.7 DEG.C
		10 QDISP 13. WATTS			T17REG 355.1 DEG.C
		11 QREG1 88. WATTS			T18REG 342.8 DEG.C
		12 QREG2 104. WATTS			T19REG 233.4 DEG.C
		13 QREG3 30. WATTS			
					T03HED 496.7 DEG.C

(B) READING 178

SERIES 8 FLUID HYDROGEN BAROM 14.352 PSI

HEAT TO DASHPOT COOLING		POWER IN	ENGINE CHARGE PRESSURE	GAS TEMPERATURES	SURFACE TEMPERATURES
FLODP	3.20 L/MIN		PRESUP 6343. KPA	TGEXP 497.7 DEG.C	T01HTR 537.9 DEG.C
					T02HTR 549.1 DEG.C
TWINDP	20.9 DEG.C	VOLTG 2.63 VOLTS	MEANBP 6954. KPA	TGREGH 493.4 DEG.C	T03HTR 536.8 DEG.C
TDLDP	2.63 DEG.C		MEANCP 6975. KPA	TGREGC 100.4 DEG.C	T04HTR 561.5 DEG.C
TWODPR	23.3 DEG.C			TGCOMP 46.7 DEG.C	T05HTR 514.1 DEG.C
				TGBOUN 33.6 DEG.C	T06HTR 537.7 DEG.C
					T07HTR 544.5 DEG.C
					T08HTR 564.3 DEG.C
					T09HTR 531.1 DEG.C
HEAT TO COOLER		CALCULATED PARAMETERS	VIBRATION	REMOTE CALCULATIONS	T10HTR 622.1 DEG.C
FLOCLR	4.02 L/MIN	1	VX1HOR 0.2 CM/S	PWROUT 447. WATTS	T11HTR 550.8 DEG.C
TWINCL	30.4 DEG.C	2 QCOOLR 1884. WATTS	VY1VER 1.8 CM/S	INDPWR 485. WATTS	T12HTR 534.1 DEG.C
TDLCL	6.76 DEG.C	3 QDSHPT 585. WATTS		PISTST 1.79 CM	
TWOCLR	36.46 DEG.C	4		DISPST 1.79 CM	
		5 TAVHTR 548.7 DEG.C			T13REG 499.7 DEG.C
		6 INTEFF 19.2 %			T14REG 471.9 DEG.C
		8 AMPS 1156. AMPS			T15REG 371.2 DEG.C
		9 QDISPQ 3. WATTS			T16REG 348.5 DEG.C
		10 QDISP 13. WATTS			T17REG 359.0 DEG.C
		11 QREG1 90. WATTS			T18REG 346.4 DEG.C
		12 QREG2 102. WATTS			T19REG 235.5 DEG.C
		13 QREG3 30. WATTS			
					T03HED 498.0 DEG.C

(C) READING 179

SERIES 8 FLUID HYDROGEN BAROM 14.352 PSI

HEAT TO DASHPOT COOLING		POWER IN	ENGINE CHARGE PRESSURE	GAS TEMPERATURES	SURFACE TEMPERATURES
FLODP	3.17 L/MIN		PRESUP 6323. KPA	TGEXP 495.2 DEG.C	T01HTR 543.7 DEG.C
					T02HTR 549.0 DEG.C
TWINDP	20.9 DEG.C	VOLTG 2.77 VOLTS	MEANBP 6959. KPA	TGREGH 497.3 DEG.C	T03HTR 540.5 DEG.C
TDLDP	2.80 DEG.C		MEANCP 6984. KPA	TGREGC 100.8 DEG.C	T04HTR 564.4 DEG.C
TWODPR	23.5 DEG.C			TGCOMP 48.3 DEG.C	T05HTR 513.5 DEG.C
				TGBOUN 34.3 DEG.C	T06HTR 542.4 DEG.C
					T07HTR 544.8 DEG.C
					T08HTR 571.1 DEG.C
					T09HTR 532.8 DEG.C
HEAT TO COOLER		CALCULATED PARAMETERS	VIBRATION	REMOTE CALCULATIONS	T10HTR 628.4 DEG.C
FLOCLR	4.02 L/MIN	1	VX1HOR 0.2 CM/S	PWROUT 485. WATTS	T11HTR 557.0 DEG.C
TWINCL	30.5 DEG.C	2 QCOOLR 2051. WATTS	VY1VER 1.9 CM/S	INDPWR 518. WATTS	T12HTR 533.0 DEG.C
TDLCL	7.37 DEG.C	3 QDSHPT 616. WATTS		PISTST 1.87 CM	
TWOCLR	37.08 DEG.C	4		DISPST 1.87 CM	
		5 TAVHTR 551.7 DEG.C			T13REG 497.9 DEG.C
		6 INTEFF 19.1 %			T14REG 471.4 DEG.C
		8 AMPS 1211. AMPS			T15REG 372.7 DEG.C
		9 QDISPQ 3. WATTS			T16REG 345.6 DEG.C
		10 QDISP 13. WATTS			T17REG 361.4 DEG.C
		11 QREG1 92. WATTS			T18REG 352.6 DEG.C
		12 QREG2 96. WATTS			T19REG 239.3 DEG.C
		13 QREG3 31. WATTS			
					T03HED 496.0 DEG.C

TABLE IV. - Continued.

(D) READING 180

SERIES 8 FLUID HYDROGEN BAROM 14.357 PSI

HEAT TO DASHPOT COOLING
FLODP 3.12 L/MIN

TWINDP 20.9 DEG.C
TDLDP 3.07 DEG.C
TWODPR 23.8 DEG.C

POWER IN
VOLTG 2.84 VOLTS

ENGINE CHARGE PRESSURE
PRESUP 6302. KPA

MEANBP 6977. KPA
MEANCP 6983. KPA

GAS TEMPERATURES
TGEXP 493.7 DEG.C

TGREGH 494.1 DEG.C
TGREGC 100.7 DEG.C
TGCOMP 50.0 DEG.C
TGBOUN 34.3 DEG.C

SURFACE TEMPERATURES
T01HTR 539.6 DEG.C
T02HTR 547.5 DEG.C
T03HTR 540.2 DEG.C
T04HTR 563.7 DEG.C
T05HTR 512.5 DEG.C
T06HTR 538.5 DEG.C
T07HTR 543.2 DEG.C
T08HTR 569.1 DEG.C
T09HTR 531.7 DEG.C
T10HTR 630.1 DEG.C
T11HTR 555.4 DEG.C
T12HTR 532.5 DEG.C

T13REG 497.8 DEG.C
T14REG 471.4 DEG.C
T15REG 374.8 DEG.C
T16REG 343.0 DEG.C
T17REG 358.6 DEG.C
T18REG 355.3 DEG.C
T19REG 242.9 DEG.C

T03HED 494.4 DEG.C

HEAT TO COOLER
FLOCLR 4.03 L/MIN
TWINCL 30.6 DEG.C
TDLCL 7.88 DEG.C
TWOCLR 37.76 DEG.C

CALCULATED PARAMETERS
1
2 QCOOLR 2199. WATTS
3 QDSHPT 666. WATTS
4
5 TAVHTR 550.3 DEG.C
6 INTEFF 20.0 %
8 AMPS 1243. AMPS
9 QDISPG 3. WATTS
10 QDISP 13. WATTS
11 QREG1 91. WATTS
12 QREG2 94. WATTS
13 QREG3 30. WATTS

VIBRATION
VX1HOR 0.2 CM/S
VY1VER 2.0 CM/S

REMOTE CALCULATIONS
PWROUT 551. WATTS
INDPWR 560. WATTS
PISTST 2.01 CM
DISPST 1.92 CM

(E) READING 181

SERIES 8 FLUID HYDROGEN BAROM 14.357 PSI

HEAT TO DASHPOT COOLING
FLODP 3.12 L/MIN

TWINDP 21.0 DEG.C
TDLDP 3.25 DEG.C
TWODPR 24.0 DEG.C

POWER IN
VOLTG 2.88 VOLTS

ENGINE CHARGE PRESSURE
PRESUP 6302. KPA

MEANBP 6999. KPA
MEANCP 7019. KPA

GAS TEMPERATURES
TGEXP 493.5 DEG.C

TGREGH 491.3 DEG.C
TGREGC 102.4 DEG.C
TGCOMP 50.4 DEG.C
TGBOUN 34.9 DEG.C

SURFACE TEMPERATURES
T01HTR 537.1 DEG.C
T02HTR 548.6 DEG.C
T03HTR 540.0 DEG.C
T04HTR 563.9 DEG.C
T05HTR 512.5 DEG.C
T06HTR 536.9 DEG.C
T07HTR 544.3 DEG.C
T08HTR 567.3 DEG.C
T09HTR 531.6 DEG.C
T10HTR 630.9 DEG.C
T11HTR 554.1 DEG.C
T12HTR 532.8 DEG.C

T13REG 498.1 DEG.C
T14REG 471.4 DEG.C
T15REG 375.1 DEG.C
T16REG 342.6 DEG.C
T17REG 352.6 DEG.C
T18REG 354.1 DEG.C
T19REG 243.4 DEG.C

T03HED 493.7 DEG.C

HEAT TO COOLER
FLOCLR 4.05 L/MIN
TWINCL 30.9 DEG.C
TDLCL 8.10 DEG.C
TWOCLR 38.19 DEG.C

CALCULATED PARAMETERS
1
2 QCOOLR 2271. WATTS
3 QDSHPT 705. WATTS
4
5 TAVHTR 550.0 DEG.C
6 INTEFF 19.6 %
8 AMPS 1262. AMPS
9 QDISPG 3. WATTS
10 QDISP 13. WATTS
11 QREG1 90. WATTS
12 QREG2 95. WATTS
13 QREG3 30. WATTS

VIBRATION
VX1HOR 0.2 CM/S
VY1VER 2.1 CM/S

REMOTE CALCULATIONS
PWROUT 553. WATTS
INDPWR 583. WATTS
PISTST 2.09 CM
DISPST 1.97 CM

(F) READING 182

SERIES 8 FLUID HYDROGEN BAROM 14.357 PSI

HEAT TO DASHPOT COOLING
FLODP 3.11 L/MIN

TWINDP 21.8 DEG.C
TDLDP 3.35 DEG.C
TWODPR 24.1 DEG.C

POWER IN
VOLTG 2.95 VOLTS

ENGINE CHARGE PRESSURE
PRESUP 6284. KPA

MEANBP 6986. KPA
MEANCP 7009. KPA

GAS TEMPERATURES
TGEXP 490.5 DEG.C

TGREGH 485.4 DEG.C
TGREGC 101.7 DEG.C
TGCOMP 52.9 DEG.C
TGBOUN 36.1 DEG.C

SURFACE TEMPERATURES
T01HTR 534.1 DEG.C
T02HTR 549.5 DEG.C
T03HTR 539.4 DEG.C
T04HTR 559.9 DEG.C
T05HTR 512.9 DEG.C
T06HTR 534.9 DEG.C
T07HTR 545.2 DEG.C
T08HTR 560.7 DEG.C
T09HTR 527.2 DEG.C
T10HTR 631.8 DEG.C
T11HTR 547.7 DEG.C
T12HTR 533.6 DEG.C

T13REG 499.3 DEG.C
T14REG 471.4 DEG.C
T15REG 372.9 DEG.C
T16REG 336.9 DEG.C
T17REG 342.0 DEG.C
T18REG 347.8 DEG.C
T19REG 241.8 DEG.C

T03HED 491.2 DEG.C

HEAT TO COOLER
FLOCLR 4.06 L/MIN
TWINCL 31.2 DEG.C
TDLCL 8.53 DEG.C
TWOCLR 38.87 DEG.C

CALCULATED PARAMETERS
1
2 QCOOLR 2397. WATTS
3 QDSHPT 725. WATTS
4
5 TAVHTR 548.1 DEG.C
6 INTEFF 18.4 %
8 AMPS 1290. AMPS
9 QDISPG 3. WATTS
10 QDISP 12. WATTS
11 QREG1 87. WATTS
12 QREG2 100. WATTS
13 QREG3 30. WATTS

VIBRATION
VX1HOR 0.2 CM/S
VY1VER 2.2 CM/S

REMOTE CALCULATIONS
PWROUT 547. WATTS
INDPWR 611. WATTS
PISTST 2.19 CM
DISPST 2.06 CM

TABLE IV. - Continued.

(G) READING 183

SERIES 8 FLUID HYDROGEN BAROM 14.357 PSI

HEAT TO DASHPOT COOLING		POWER IN	ENGINE CHARGE PRESSURE	GAS TEMPERATURES	SURFACE TEMPERATURES
FLODP	3.10 L/MIN		PRESUP 6262. KPA	TGEXP 486.4 DEG.C	T01HTR 536.7 DEG.C
					T02HTR 548.0 DEG.C
TWINDP	21.0 DEG.C	VOLTG 3.06 VOLTS	MEANBP 6918. KPA	TGREGH 482.7 DEG.C	T03HTR 540.7 DEG.C
TDLDP	3.56 DEG.C		MEANCP 6944. KPA	TGREGC 102.3 DEG.C	T04HTR 557.9 DEG.C
TWODPR	24.2 DEG.C			TGCOMP 55.2 DEG.C	T05HTR 511.1 DEG.C
				TGBOUN 36.6 DEG.C	T06HTR 535.6 DEG.C
					T07HTR 544.0 DEG.C
					T08HTR 558.9 DEG.C
					T09HTR 524.6 DEG.C
HEAT TO COOLER		CALCULATED PARAMETERS	VIBRATION	REMOTE CALCULATIONS	T10HTR 637.0 DEG.C
FLOCLR	4.07 L/MIN	1	VX1HOR 0.2 CM/S	PWROUT 577. WATTS	T11HTR 545.5 DEG.C
TWINCL	31.4 DEG.C	2 QCOOLR 2532. WATTS	VY1VER 2.3 CM/S	INDPWR 685. WATTS	T12HTR 532.1 DEG.C
TDLCL	8.99 DEG.C	3 QDSHPT 765. WATTS		PISTST 2.30 CM	
TWOCLR	39.68 DEG.C	4		DISPST 2.13 CM	
		5 TAVHTR 547.7 DEG.C			T13REG 497.8 DEG.C
		6 INTEFF 18.4 %			T14REG 470.3 DEG.C
		8 AMPS 1340. AMPS			T15REG 371.5 DEG.C
		9 QDISPG 3. WATTS			T16REG 333.2 DEG.C
		10 QDISP 12. WATTS			T17REG 342.1 DEG.C
		11 QREG1 88. WATTS			T18REG 350.0 DEG.C
		12 QREG2 98. WATTS			T19REG 241.0 DEG.C
		13 QREG3 29. WATTS			
					T03HED 488.5 DEG.C

(H) READING 184

SERIES 8 FLUID HYDROGEN BAROM 14.362 PSI

HEAT TO DASHPOT COOLING		POWER IN	ENGINE CHARGE PRESSURE	GAS TEMPERATURES	SURFACE TEMPERATURES
FLODP	3.09 L/MIN		PRESUP 6223. KPA	TGEXP 484.7 DEG.C	T01HTR 542.6 DEG.C
					T02HTR 547.0 DEG.C
TWINDP	21.0 DEG.C	VOLTG 3.14 VOLTS	MEANBP 6931. KPA	TGREGH 489.1 DEG.C	T03HTR 544.4 DEG.C
TDLDP	3.68 DEG.C		MEANCP 6967. KPA	TGREGC 103.3 DEG.C	T04HTR 560.5 DEG.C
TWODPR	24.4 DEG.C			TGCOMP 58.3 DEG.C	T05HTR 509.1 DEG.C
				TGBOUN 37.3 DEG.C	T06HTR 541.1 DEG.C
					T07HTR 542.7 DEG.C
					T08HTR 565.7 DEG.C
					T09HTR 526.1 DEG.C
HEAT TO COOLER		CALCULATED PARAMETERS	VIBRATION	REMOTE CALCULATIONS	T10HTR 641.5 DEG.C
FLOCLR	4.09 L/MIN	1	VX1HOR 0.2 CM/S	PWROUT 574. WATTS	T11HTR 553.2 DEG.C
TWINCL	31.9 DEG.C	2 QCOOLR 2705. WATTS	VY1VER 2.4 CM/S	INDPWR 664. WATTS	T12HTR 530.3 DEG.C
TDLCL	9.57 DEG.C	3 QDSHPT 791. WATTS		PISTST 2.39 CM	
TWOCLR	40.70 DEG.C	4		DISPST 2.17 CM	
		5 TAVHTR 550.4 DEG.C			T13REG 492.7 DEG.C
		6 INTEFF 17.5 %			T14REG 464.0 DEG.C
		8 AMPS 1375. AMPS			T15REG 361.9 DEG.C
		9 QDISPG 3. WATTS			T16REG 331.5 DEG.C
		10 QDISP 12. WATTS			T17REG 352.0 DEG.C
		11 QREG1 96. WATTS			T18REG 350.9 DEG.C
		12 QREG2 92. WATTS			T19REG 233.1 DEG.C
		13 QREG3 30. WATTS			
					T03HED 487.7 DEG.C

(I) READING 185

SERIES 8 FLUID HYDROGEN BAROM 14.362 PSI

HEAT TO DASHPOT COOLING		POWER IN	ENGINE CHARGE PRESSURE	GAS TEMPERATURES	SURFACE TEMPERATURES
FLODP	3.11 L/MIN		PRESUP 6243. KPA	TGEXP 487.4 DEG.C	T01HTR 545.6 DEG.C
					T02HTR 550.9 DEG.C
TWINDP	21.0 DEG.C	VOLTG 3.22 VOLTS	MEANBP 7016. KPA	TGREGH 489.7 DEG.C	T03HTR 541.1 DEG.C
TDLDP	3.87 DEG.C		MEANCP 7043. KPA	TGREGC 103.0 DEG.C	T04HTR 563.4 DEG.C
TWODPR	24.6 DEG.C			TGCOMP 60.9 DEG.C	T05HTR 508.7 DEG.C
				TGBOUN 38.8 DEG.C	T06HTR 544.5 DEG.C
					T07HTR 545.7 DEG.C
					T08HTR 568.6 DEG.C
					T09HTR 527.6 DEG.C
HEAT TO COOLER		CALCULATED PARAMETERS	VIBRATION	REMOTE CALCULATIONS	T10HTR 643.6 DEG.C
FLOCLR	4.10 L/MIN	1	VX1HOR 0.2 CM/S	PWROUT 614. WATTS	T11HTR 554.2 DEG.C
TWINCL	32.5 DEG.C	2 QCOOLR 2881. WATTS	VY1VER 2.5 CM/S	INDPWR 706. WATTS	T12HTR 531.7 DEG.C
TDLCL	10.16 DEG.C	3 QDSHPT 838. WATTS		PISTST 2.47 CM	
TWOCLR	41.74 DEG.C	4		DISPST 2.24 CM	
		5 TAVHTR 552.1 DEG.C			T13REG 494.5 DEG.C
		6 INTEFF 17.6 %			T14REG 463.6 DEG.C
		8 AMPS 1407. AMPS			T15REG 355.8 DEG.C
		9 QDISPG 3. WATTS			T16REG 323.1 DEG.C
		10 QDISP 12. WATTS			T17REG 343.7 DEG.C
		11 QREG1 88. WATTS			T18REG 336.[illegible] DEG.C
		12 QREG2 104. WATTS			T19REG 227.[illegible] DEG.C
		13 QREG3 30. WATTS			
					T03HED 489.9 DEG.C

TABLE IV. - Continued.

(J) READING 186

SERIES 8 FLUID HYDROGEN BAROM 14.366 PSI

HEAT TO DASHPOT COOLING
FLODP 3.12 L/MIN
TWINDP 21.0 DEG.C
TDLDP 4.05 DEG.C
TWODPR 24.8 DEG.C

POWER IN
VOLTG 3.24 VOLTS

ENGINE CHARGE PRESSURE
PRESUP 6267. KPA
MEANBP 7079. KPA
MEANCP 7114. KPA

GAS TEMPERATURES
TGEXP 484.9 DEG.C
TGREGH 483.5 DEG.C
TGREGC 104.2 DEG.C
TGCOMP 61.8 DEG.C
TGBOUN 39.7 DEG.C

SURFACE TEMPERATURES
T01HTR 540.4 DEG.C
T02HTR 548.5 DEG.C
T03HTR 543.4 DEG.C
T04HTR 559.2 DEG.C
T05HTR 508.7 DEG.C
T06HTR 540.0 DEG.C
T07HTR 543.2 DEG.C
T08HTR 562.7 DEG.C
T09HTR 523.5 DEG.C
T10HTR 645.4 DEG.C
T11HTR 548.8 DEG.C
T12HTR 531.6 DEG.C
T13REG 493.5 DEG.C
T14REG 463.4 DEG.C
T15REG 358.7 DEG.C
T16REG 321.1 DEG.C
T17REG 336.2 DEG.C
T18REG 348.7 DEG.C
T19REG 232.8 DEG.C
T03HED 487.6 DEG.C

HEAT TO COOLER
FLOCLR 4.13 L/MIN
TWINCL 33.2 DEG.C
TDLCL 10.21 DEG.C
TWOCLR 42.58 DEG.C

CALCULATED PARAMETERS
1
2 QCOOLR 2916. WATTS
3 QDSHPT 878. WATTS
4
5 TAVHTR 549.6 DEG.C
6 INTEFF 17.2 %
8 AMPS 1417. AMPS
9 QDISPG 3. WATTS
10 QDISP 12. WATTS
11 QREG1 88. WATTS
12 QREG2 100. WATTS
13 QREG3 29. WATTS

VIBRATION
VX1HOR 0.2 CM/S
VY1VER 2.5 CM/S

REMOTE CALCULATIONS
PWROUT 605. WATTS
INDPWR 736. WATTS
PISTST 2.59 CM
DISPST 2.31 CM

(K) READING 187

SERIES 8 FLUID HYDROGEN BAROM 14.366 PSI

HEAT TO DASHPOT COOLING
FLODP 3.11 L/MIN
TWINDP 21.1 DEG.C
TDLDP 4.26 DEG.C
TWODPR 25.1 DEG.C

POWER IN
VOLTG 3.35 VOLTS

ENGINE CHARGE PRESSURE
PRESUP 6257. KPA
MEANBP 7115. KPA
MEANCP 7144. KPA

GAS TEMPERATURES
TGEXP 483.1 DEG.C
TGREGH 480.4 DEG.C
TGREGC 102.9 DEG.C
TGCOMP 66.7 DEG.C
TGBOUN 40.9 DEG.C

SURFACE TEMPERATURES
T01HTR 541.4 DEG.C
T02HTR 547.8 DEG.C
T03HTR 543.6 DEG.C
T04HTR 557.8 DEG.C
T05HTR 505.5 DEG.C
T06HTR 541.3 DEG.C
T07HTR 540.8 DEG.C
T08HTR 561.9 DEG.C
T09HTR 519.2 DEG.C
T10HTR 650.4 DEG.C
T11HTR 546.4 DEG.C
T12HTR 530.1 DEG.C
T13REG 489.9 DEG.C
T14REG 456.5 DEG.C
T15REG 342.5 DEG.C
T16REG 304.3 DEG.C
T17REG 325.7 DEG.C
T18REG 326.6 DEG.C
T19REG 218.7 DEG.C
T03HED 486.5 DEG.C

HEAT TO COOLER
FLOCLR 4.13 L/MIN
TWINCL 33.7 DEG.C
TDLCL 10.84 DEG.C
TWOCLR 43.75 DEG.C

CALCULATED PARAMETERS
1
2 QCOOLR 3099. WATTS
3 QDSHPT 922. WATTS
4
5 TAVHTR 548.7 DEG.C
6 INTEFF 16.9 %
8 AMPS 1467. AMPS
9 QDISPG 3. WATTS
10 QDISP 12. WATTS
11 QREG1 87. WATTS
12 QREG2 105. WATTS
13 QREG3 29. WATTS

VIBRATION
VX1HOR 0.2 CM/S
VY1VER 2.7 CM/S

REMOTE CALCULATIONS
PWROUT 632. WATTS
INDPWR 749. WATTS
PISTST 2.67 CM
DISPST 2.36 CM

(L) READING 189

SERIES 8 FLUID HYDROGEN BAROM 14.366 PSI

HEAT TO DASHPOT COOLING
FLODP 3.08 L/MIN
TWINDP 21.2 DEG.C
TDLDP 3.21 DEG.C
TWODPR 24.1 DEG.C

POWER IN
VOLTG 2.66 VOLTS

ENGINE CHARGE PRESSURE
PRESUP 6384. KPA
MEANBP 7016. KPA
MEANCP 7053. KPA

GAS TEMPERATURES
TGEXP 545.1 DEG.C
TGREGH 542.6 DEG.C
TGREGC 102.3 DEG.C
TGCOMP 48.4 DEG.C
TGBOUN 37.6 DEG.C

SURFACE TEMPERATURES
T01HTR 591.7 DEG.C
T02HTR 600.7 DEG.C
T03HTR 591.5 DEG.C
T04HTR 617.8 DEG.C
T05HTR 565.5 DEG.C
T06HTR 593.5 DEG.C
T07HTR 595.4 DEG.C
T08HTR 620.7 DEG.C
T09HTR 584.5 DEG.C
T10HTR 677.6 DEG.C
T11HTR 605.5 DEG.C
T12HTR 585.7 DEG.C
T13REG 546.2 DEG.C
T14REG 517.8 DEG.C
T15REG 408.6 DEG.C
T16REG 373.4 DEG.C
T17REG 385.6 DEG.C
T18REG 384.2 DEG.C
T19REG 268.9 DEG.C
T03HED 544.2 DEG.C

HEAT TO COOLER
FLOCLR 4.13 L/MIN
TWINCL 33.4 DEG.C
TDLCL 6.60 DEG.C
TWOCLR 39.25 DEG.C

CALCULATED PARAMETERS
1
2 QCOOLR 1884. WATTS
3 QDSHPT 686. WATTS
4
5 TAVHTR 602.4 DEG.C
6 INTEFF 19.0 %
8 AMPS 1159. AMPS
9 QDISPG 4. WATTS
10 QDISP 14. WATTS
11 QREG1 100. WATTS
12 QREG2 108. WATTS
13 QREG3 34. WATTS

VIBRATION
VX1HOR 0.1 CM/S
VY1VER 1.6 CM/S

REMOTE CALCULATIONS
PWROUT 443. WATTS
INDPWR 475. WATTS
PISTST 1.64 CM
DISPST 1.74 CM

TABLE IV. - Continued.

(M) READING 190

SERIES 8 FLUID HYDROGEN BAROM 14.366 PSI

HEAT TO DASHPOT COOLING
FLODP 3.07 L/MIN
TWINDP 21.2 DEG.C
TDLDP 3.21 DEG.C
TWODPR 24.1 DEG.C

POWER IN
VOLTG 2.73 VOLTS

ENGINE CHARGE PRESSURE
PRESUP 6338. KPA
MEANBP 6988. KPA
MEANCP 6999. KPA

GAS TEMPERATURES
TGEXP 542.3 DEG.C
TGREGH 541.4 DEG.C
TGREGC 105.2 DEG.C
TGCOMP 49.7 DEG.C
TGBOUN 37.4 DEG.C

SURFACE TEMPERATURES
T01HTR 591.3 DEG.C
T02HTR 596.7 DEG.C
T03HTR 590.9 DEG.C
T04HTR 613.8 DEG.C
T05HTR 562.1 DEG.C
T06HTR 591.4 DEG.C
T07HTR 592.2 DEG.C
T08HTR 619.2 DEG.C
T09HTR 581.5 DEG.C
T10HTR 678.2 DEG.C
T11HTR 604.8 DEG.C
T12HTR 582.3 DEG.C
T13REG 543.8 DEG.C
T14REG 515.2 DEG.C
T15REG 408.2 DEG.C
T16REG 375.6 DEG.C
T17REG 388.6 DEG.C
T18REG 388.6 DEG.C
T19REG 262.3 DEG.C
T03HED 542.8 DEG.C

HEAT TO COOLER
FLOCLR 4.11 L/MIN
TWINCL 33.1 DEG.C
TDLCL 7.13 DEG.C
TWOCLR 39.45 DEG.C

CALCULATED PARAMETERS
1
2 QCOOLR 2029. WATTS
3 QDSHPT 685. WATTS
4
5 TAVHTR 600.4 DEG.C
6 INTEFF 19.1 %
8 AMPS 1189. AMPS
9 QDISPG 4. WATTS
10 QDISP 14. WATTS
11 QREG1 102. WATTS
12 QREG2 103. WATTS
13 QREG3 34. WATTS

VIBRATION
VX1HOR 0.2 CM/S
VY1VER 1.8 CM/S

REMOTE CALCULATIONS
PWROUT 479. WATTS
INDPWR 506. WATTS
PISTST 1.76 CM
DISPST 1.77 CM

(N) READING 191

SERIES 8 FLUID HYDROGEN BAROM 14.371 PSI

HEAT TO DASHPOT COOLING
FLODP 3.08 L/MIN
TWINDP 21.2 DEG.C
TDLDP 3.30 DEG.C
TWODPR 24.3 DEG.C

POWER IN
VOLTG 2.81 VOLTS

ENGINE CHARGE PRESSURE
PRESUP 6320. KPA
MEANBP 6983. KPA
MEANCP 7009. KPA

GAS TEMPERATURES
TGEXP 540.0 DEG.C
TGREGH 537.3 DEG.C
TGREGC 106.5 DEG.C
TGCOMP 50.3 DEG.C
TGBOUN 37.3 DEG.C

SURFACE TEMPERATURES
T01HTR 590.8 DEG.C
T02HTR 597.8 DEG.C
T03HTR 590.1 DEG.C
T04HTR 613.4 DEG.C
T05HTR 562.2 DEG.C
T06HTR 590.1 DEG.C
T07HTR 593.1 DEG.C
T08HTR 617.1 DEG.C
T09HTR 580.8 DEG.C
T10HTR 679.2 DEG.C
T11HTR 602.9 DEG.C
T12HTR 582.4 DEG.C
T13REG 544.1 DEG.C
T14REG 515.5 DEG.C
T15REG 409.7 DEG.C
T16REG 376.1 DEG.C
T17REG 384.2 DEG.C
T18REG 386.8 DEG.C
T19REG 264.4 DEG.C
T03HED 540.8 DEG.C

HEAT TO COOLER
FLOCLR 4.10 L/MIN
TWINCL 33.1 DEG.C
TDLCL 7.39 DEG.C
TWOCLR 39.69 DEG.C

CALCULATED PARAMETERS
1
2 QCOOLR 2099. WATTS
3 QDSHPT 708. WATTS
4
5 TAVHTR 599.9 DEG.C
6 INTEFF 19.9 %
8 AMPS 1228. AMPS
9 QDISPG 4. WATTS
10 QDISP 14. WATTS
11 QREG1 99. WATTS
12 QREG2 104. WATTS
13 QREG3 33. WATTS

VIBRATION
VX1HOR 0.2 CM/S
VY1VER 1.9 CM/S

REMOTE CALCULATIONS
PWROUT 521. WATTS
INDPWR 536. WATTS
PISTST 1.87 CM
DISPST 1.86 CM

(O) READING 192

SERIES 8 FLUID HYDROGEN BAROM 14.371 PSI

HEAT TO DASHPOT COOLING
FLODP 3.09 L/MIN
TWINDP 21.2 DEG.C
TDLDP 3.28 DEG.C
TWODPR 24.4 DEG.C

POWER IN
VOLTG 2.86 VOLTS

ENGINE CHARGE PRESSURE
PRESUP 6303. KPA
MEANBP 6996. KPA
MEANCP 7009. KPA

GAS TEMPERATURES
TGEXP 540.4 DEG.C
TGREGH 538.7 DEG.C
TGREGC 108.3 DEG.C
TGCOMP 52.1 DEG.C
TGBOUN 37.9 DEG.C

SURFACE TEMPERATURES
T01HTR 591.3 DEG.C
T02HTR 599.8 DEG.C
T03HTR 591.8 DEG.C
T04HTR 616.3 DEG.C
T05HTR 563.6 DEG.C
T06HTR 590.2 DEG.C
T07HTR 595.7 DEG.C
T08HTR 619.6 DEG.C
T09HTR 583.2 DEG.C
T10HTR 682.8 DEG.C
T11HTR 604.4 DEG.C
T12HTR 583.8 DEG.C
T13REG 545.1 DEG.C
T14REG 516.6 DEG.C
T15REG 409.8 DEG.C
T16REG 378.8 DEG.C
T17REG 386.8 DEG.C
T18REG 387.4 DEG.C
T19REG 265.1 DEG.C
T03HED 540.7 DEG.C

HEAT TO COOLER
FLOCLR 4.12 L/MIN
TWINCL 33.1 DEG.C
TDLCL 7.78 DEG.C
TWOCLR 40.15 DEG.C

CALCULATED PARAMETERS
1
2 QCOOLR 2217. WATTS
3 QDSHPT 704. WATTS
4
5 TAVHTR 601.9 DEG.C
6 INTEFF 18.5 %
8 AMPS 1247. AMPS
9 QDISPG 4. WATTS
10 QDISP 14. WATTS
11 QREG1 99. WATTS
12 QREG2 105. WATTS
13 QREG3 33. WATTS

VIBRATION
VX1HOR 0.2 CM/S
VY1VER 2.0 CM/S

REMOTE CALCULATIONS
PWROUT 504. WATTS
INDPWR 560. WATTS
PISTST 1.94 CM
DISPST 1.90 CM

TABLE IV. - Continued.

(P) READING 193

SERIES 0 FLUID HYDROGEN BAROM 14.376 PSI

HEAT TO DASHPOT COOLING		POWER IN		ENGINE CHARGE PRESSURE		GAS TEMPERATURES		SURFACE TEMPERATURES
FLODP	3.07 L/MIN			PRESUP	6300. KPA	TGEXP	538.8 DEG.C	T01HTR 590.7 DEG.C
								T02HTR 599.4 DEG.C
TWINDP	21.3 DEG C	VOLTG	2.99 VOLTS	MEANBP	7022. KPA	TGREGH	539.5 DEG.C	T03HTR 592.2 DEG.C
TDLDP	3.56 DEG C			MEANCP	7051. KPA	TGREGC	110.6 DEG.C	T04HTR 616.6 DEG.C
TWODPR	24.6 DEG C					TGCOMP	54.4 DEG.C	T05HTR 561.9 DEG.C
						TGBOUN	38.5 DEG.C	T06HTR 588.4 DEG.C
								T07HTR 595.7 DEG.C
								T08HTR 620.3 DEG.C
								T09HTR 583.2 DEG.C
HEAT TO COOLER		CALCULATED PARAMETERS		VIBRATION		REMOTE CALCULATIONS		T10HTR 686.1 DEG.C
FLOCLR	4.11 L/MIN	1		VX1HOR	0.2 CM/S	PWROUT	565. WATTS	T11HTR 606.2 DEG.C
TWINCL	33.2 DEG C	2 QCOOLR	2376. WATTS	VY1VER	2.1 CM/S	INDPWR	619. WATTS	T12HTR 582.2 DEG.C
TDLCL	8.35 DEG C	3 QDSHPT	760. WATTS			PISTST	2.06 CM	
TWOCLR	40.80 DEG C	4				DISPST	1.96 CM	
		5 TAVHTR	601.9 DEG.C					T13REG 544.2 DEG.C
		6 INTEFF	19.2 %					T14REG 515.8 DEG.C
		8 AMPS	1306. AMPS					T15REG 409.8 DEG.C
		9 QDISPG	4. WATTS					T16REG 379.5 DEG.C
		10 QDISP	14. WATTS					T17REG 388.7 DEG.C
		11 QREG1	101. WATTS					T18REG 389.5 DEG.C
		12 QREG2	102. WATTS					T19REG 265.6 DEG.C
		13 QREG3	33. WATTS					
								T03HED 528.7 DEG.C

(Q) READING 194

SERIES 0 FLUID HYDROGEN BAROM 14.376 PSI

HEAT TO DASHPOT COOLING		POWER IN		ENGINE CHARGE PRESSURE		GAS TEMPERATURES		SURFACE TEMPERATURES
FLODP	3.09 L/MIN			PRESUP	6417. KPA	TGEXP	535.6 DEG.C	T01HTR 588.2 DEG.C
								T02HTR 601.8 DEG.C
TWINDP	21.3 DEG C	VOLTG	3.06 VOLTS	MEANBP	7008. KPA	TGREGH	533.0 DEG.C	T03HTR 591.8 DEG.C
TDLDP	3.68 DEG C			MEANCP	7035. KPA	TGREGC	112.2 DEG.C	T04HTR 616.8 DEG.C
TWODPR	24.9 DEG C					TGCOMP	56.1 DEG.C	T05HTR 563.2 DEG.C
						TGBOUN	39.2 DEG.C	T06HTR 586.4 DEG.C
								T07HTR 598.2 DEG.C
								T08HTR 616.7 DEG.C
								T09HTR 582.9 DEG.C
HEAT TO COOLER		CALCULATED PARAMETERS		VIBRATION		REMOTE CALCULATIONS		T10HTR 687.3 DEG.C
FLOCLR	4.13 L/MIN	1		VX1HOR	0.2 CM/S	PWROUT	593. WATTS	T11HTR 602.8 DEG.C
TWINCL	33.5 DEG C	2 QCOOLR	2568. WATTS	VY1VER	2.2 CM/S	INDPWR	665. WATTS	T12HTR 583.8 DEG.C
TDLCL	9.00 DEG C	3 QDSHPT	789. WATTS			PISTST	2.20 CM	
TWOCLR	41.69 DEG C	4				DISPST	2.04 CM	
		5 TAVHTR	601.7 DEG.C					T13REG 545.5 DEG.C
		6 INTEFF	18.0 %					T14REG 517.0 DEG.C
		8 AMPS	1329. AMPS					T15REG 411.6 DEG.C
		9 QDISPG	4. WATTS					T16REG 378.3 DEG.C
		10 QDISP	14. WATTS					T17REG 382.5 DEG.C
		11 QREG1	98. WATTS					T18REG 388.6 DEG.C
		12 QREG2	104. WATTS					T19REG 268.2 DEG.C
		13 QREG3	33. WATTS					
								T03HED 525.4 DEG.C

(R) READING 195

SERIES 0 FLUID HYDROGEN BAROM 14.376 PSI

HEAT TO DASHPOT COOLING		POWER IN		ENGINE CHARGE PRESSURE		GAS TEMPERATURES		SURFACE TEMPERATURES
FLODP	3.08 L/MIN			PRESUP	6414. KPA	TGEXP	534.5 DEG.C	T01HTR 589.5 DEG.C
								T02HTR 601.2 DEG.C
TWINDP	21.4 DEG.C	VOLTG	3.15 VOLTS	MEANBP	7004. KPA	TGREGH	535.5 DEG.C	T03HTR 593.5 DEG.C
TDLDP	3.85 DEG C			MEANCP	7042. KPA	TGREGC	113.4 DEG.C	T04HTR 617.5 DEG.C
TWODPR	25.0 DEG C					TGCOMP	58.3 DEG.C	T05HTR 561.6 DEG.C
						TGBOUN	39.8 DEG.C	T06HTR 586.8 DEG.C
								T07HTR 597.8 DEG.C
								T08HTR 618.4 DEG.C
								T09HTR 583.4 DEG.C
HEAT TO COOLER		CALCULATED PARAMETERS		VIBRATION		REMOTE CALCULATIONS		T10HTR 691.4 DEG.C
FLOCLR	4.13 L/MIN	1		VX1HOR	0.2 CM/S	PWROUT	604. WATTS	T11HTR 604.3 DEG.C
TWINCL	33.5 DEG C	2 QCOOLR	2682. WATTS	VY1VER	2.3 CM/S	INDPWR	679. WATTS	T12HTR 582.1 DEG.C
TDLCL	9.38 DEG C	3 QDSHPT	824. WATTS			PISTST	2.25 CM	
TWOCLR	42.09 DEG C	4				DISPST	2.09 CM	
		5 TAVHTR	602.3 DEG.C					T13REG 544.2 DEG.C
		6 INTEFF	18.4 %					T14REG 515.8 DEG.C
		8 AMPS	1370. AMPS					T15REG 410.0 DEG.C
		9 QDISPG	4. WATTS					T16REG 378.9 DEG.C
		10 QDISP	14. WATTS					T17REG 387.1 DEG.C
		11 QREG1	101. WATTS					T18REG 390.8 DEG.C
		12 QREG2	101. WATTS					T19REG 266.8 DEG.C
		13 QREG3	33. WATTS					
								T03HED 525.3 DEG.C

TABLE IV. - Continued.

(S) READING 196

SERIES 0 FLUID HYDROGEN BAROM 14.376 PSI

HEAT TO DASHPOT COOLING	POWER IN	ENGINE CHARGE PRESSURE	GAS TEMPERATURES	SURFACE TEMPERATURES
FLODP 3.08 L/MIN		PRESUP 6409. KPA	TGEXP 535.9 DEG.C	T01HTR 587.9 DEG.C
				T02HTR 602.2 DEG.C
TWINDP 21.4 DEG.C	VOLTG 3.13 VOLTS	MEANBP 6994. KPA	TGREGH 532.7 DEG.C	T03HTR 592.5 DEG.C
TDLDP 3.95 DEG.C		MEANCP 7013. KPA	TGREGC 111.8 DEG.C	T04HTR 614.2 DEG.C
TWODPR 25.1 DEG.C			TGCOMP 58.7 DEG.C	T05HTR 562.9 DEG.C
			TGBOUN 40.3 DEG.C	T06HTR 586.8 DEG.C
				T07HTR 598.4 DEG.C
				T08HTR 614.5 DEG.C
				T09HTR 579.8 DEG.C
HEAT TO COOLER	CALCULATED PARAMETERS	VIBRATION	REMOTE CALCULATIONS	T10HTR 690.0 DEG.C
FLOCLR 4.12 L/MIN	1	VX1HOR 0.2 CM/S	PWROUT 616. WATTS	T11HTR 600.9 DEG.C
TWINCL 33.6 DEG.C	2 QCOOLR 2699. WATTS	VY1VER 2.4 CM/S	INDPWR 704. WATTS	T12HTR 584.1 DEG.C
TDLCL 9.46 DEG.C	3 QDSHPT 846. WATTS		PISTST 2.34 CM	
TWOCLR 42.37 DEG.C	4		DISPST 2.14 CM	
	5 TAVHTR 601.2 DEG.C			T13REG 546.1 DEG.C
	6 INTEFF 18.3 %			T14REG 516.2 DEG.C
	8 AMPS 1368. AMPS			T15REG 407.0 DEG.C
	9 QDISPG 4. WATTS			T16REG 369.6 DEG.C
	10 QDISP 14. WATTS			T17REG 375.5 DEG.C
	11 QREG1 96. WATTS			T18REG 381.4 DEG.C
	12 QREG2 109. WATTS			T19REG 263.4 DEG.C
	13 QREG3 33. WATTS			
				T03HED 526.9 DEG.C

(T) READING 197

SERIES 0 FLUID HYDROGEN BAROM 14.381 PSI

HEAT TO DASHPOT COOLING	POWER IN	ENGINE CHARGE PRESSURE	GAS TEMPERATURES	SURFACE TEMPERATURES
FLODP 2.61 L/MIN		PRESUP 6403. KPA	TGEXP 529.8 DEG.C	T01HTR 586.0 DEG.C
				T02HTR 597.1 DEG.C
TWINDP 21.4 DEG.C	VOLTG 3.32 VOLTS	MEANBP 6990. KPA	TGREGH 521.9 DEG.C	T03HTR 592.2 DEG.C
TDLDP 4.79 DEG.C		MEANCP 7004. KPA	TGREGC 104.3 DEG.C	T04HTR 609.0 DEG.C
TWODPR 25.9 DEG.C			TGCOMP 63.5 DEG.C	T05HTR 553.6 DEG.C
			TGBOUN 41.6 DEG.C	T06HTR 587.1 DEG.C
				T07HTR 598.7 DEG.C
				T08HTR 609.4 DEG.C
				T09HTR 570.7 DEG.C
HEAT TO COOLER	CALCULATED PARAMETERS	VIBRATION	REMOTE CALCULATIONS	T10HTR 699.0 DEG.C
FLOCLR 4.40 L/MIN	1	VX1HOR 0.2 CM/S	PWROUT 667. WATTS	T11HTR 594.8 DEG.C
TWINCL 33.6 DEG.C	2 QCOOLR 2996. WATTS	VY1VER 2.6 CM/S	INDPWR 783. WATTS	T12HTR 578.4 DEG.C
TDLCL 9.83 DEG.C	3 QDSHPT 870. WATTS		PISTST 2.52 CM	
TWOCLR 42.71 DEG.C	4		DISPST 2.24 CM	
	5 TAVHTR 597.3 DEG.C			T13REG 535.2 DEG.C
	6 INTEFF 18.3 %			T14REG 498.2 DEG.C
	8 AMPS 1449. AMPS			T15REG 369.4 DEG.C
	9 QDISPG 4. WATTS			T16REG 333.4 DEG.C
	10 QDISP 13. WATTS			T17REG 351.0 DEG.C
	11 QREG1 101. WATTS			T18REG 354.4 DEG.C
	12 QREG2 117. WATTS			T19REG 238.4 DEG.C
	13 QREG3 32. WATTS			
				T03HED 523.1 DEG.C

(U) READING 198

SERIES 0 FLUID HYDROGEN BAROM 14.376 PSI

HEAT TO DASHPOT COOLING	POWER IN	ENGINE CHARGE PRESSURE	GAS TEMPERATURES	SURFACE TEMPERATURES
FLODP 2.87 L/MIN		PRESUP 6407. KPA	TGEXP 530.1 DEG.C	T01HTR 586.6 DEG.C
				T02HTR 600.5 DEG.C
TWINDP 21.5 DEG.C	VOLTG 3.36 VOLTS	MEANBP 6978. KPA	TGREGH 526.5 DEG.C	T03HTR 592.1 DEG.C
TDLDP 4.64 DEG.C		MEANCP 7007. KPA	TGREGC 109.3 DEG.C	T04HTR 612.9 DEG.C
TWODPR 25.8 DEG.C			TGCOMP 62.4 DEG.C	T05HTR 557.3 DEG.C
			TGBOUN 41.8 DEG.C	T06HTR 587.3 DEG.C
				T07HTR 595.4 DEG.C
				T08HTR 613.4 DEG.C
				T09HTR 575.2 DEG.C
HEAT TO COOLER	CALCULATED PARAMETERS	VIBRATION	REMOTE CALCULATIONS	T10HTR 698.5 DEG.C
FLOCLR 4.41 L/MIN	1	VX1HOR 0.2 CM/S	PWROUT 684. WATTS	T11HTR 599.2 DEG.C
TWINCL 33.5 DEG.C	2 QCOOLR 2997. WATTS	VY1VER 2.6 CM/S	INDPWR 789. WATTS	T12HTR 580.8 DEG.C
TDLCL 9.82 DEG.C	3 QDSHPT 928. WATTS		PISTST 2.54 CM	
TWOCLR 42.45 DEG.C	4		DISPST 2.25 CM	
	5 TAVHTR 599.9 DEG.C			T13REG 539.7 DEG.C
	6 INTEFF 19.2 %			T14REG 506.2 DEG.C
	8 AMPS 1458. AMPS			T15REG 387.9 DEG.C
	9 QDISPG 4. WATTS			T16REG 351.9 DEG.C
	10 QDISP 13. WATTS			T17REG 363.2 DEG.C
	11 QREG1 97. WATTS			T18REG 366.2 DEG.C
	12 QREG2 114. WATTS			T19REG 246.7 DEG.C
	13 QREG3 32. WATTS			
				T03HED 520.9 DEG.C

TABLE IV. - Continued.

(V) READING 199

SERIES 0 FLUID HYDROGEN BAROM 14.581 PSI

HEAT TO DASHPOT COOLING
FLODP 2.90 L/MIN
TWINDP 21.5 DEG.C
TDLDP 4.64 DEG.C
TWODPR 25.9 DEG.C

POWER IN
VOLTG 3.36 VOLTS

ENGINE CHARGE PRESSURE
PRESUP 6404. KPA
MEANBP 6972. KPA
MEANCP 6998. KPA

GAS TEMPERATURES
TGEXP 529.7 DEG.C
TGREGH 525.3 DEG.C
TGREGC 108.9 DEG.C
TGCOMP 62.8 DEG.C
TGBOUN 42.2 DEG.C

SURFACE TEMPERATURES
T01HTR 587.7 DEG.C
T02HTR 600.3 DEG.C
T03HTR 590.6 DEG.C
T04HTR 612.7 DEG.C
T05HTR 556.2 DEG.C
T06HTR 588.9 DEG.C
T07HTR 594.9 DEG.C
T08HTR 613.3 DEG.C
T09HTR 574.8 DEG.C
T10HTR 697.8 DEG.C
T11HTR 598.1 DEG.C
T12HTR 580.4 DEG.C
T13REG 540.2 DEG.C
T14REG 506.4 DEG.C
T15REG 387.8 DEG.C
T16REG 352.5 DEG.C
T17REG 363.1 DEG.C
T18REG 364.9 DEG.C
T19REG 246.7 DEG.C
T03HED 521.1 DEG.C

HEAT TO COOLER
FLOCLR 4.46 L/MIN
TWINCL 33.4 DEG.C
TDLCL 9.86 DEG.C
TWOCLR 42.49 DEG.C

CALCULATED PARAMETERS
1
2 QCOOLR 3045. WATTS
3 QDSHPT 936. WATTS
4
5 TAVHTR 599.6 DEG.C
6 INTEFF 18.9 %
8 AMPS 1459. AMPS
9 QDISPG 4. WATTS
10 QDISP 13. WATTS
11 QREG1 96. WATTS
12 QREG2 115. WATTS
13 QREG3 32. WATTS

VIBRATION
VX1HOR 0.2 CM/S
VY1VER 2.7 CM/S

REMOTE CALCULATIONS
PWROUT 641. WATTS
INDPWR 759. WATTS
PISTST 2.49 CM
DISPST 2.24 CM

(W) READING 382

SERIES 0 FLUID HYDROGEN BAROM 14.150 PSI

HEAT TO DASHPOT COOLING
FLODP 5.05 L/MIN
TWINDP 18.6 DEG.C
TDLDP 1.66 DEG.C
TWODPR 20.2 DEG.C

POWER IN
AMPS1 817. AMPS
AMPS2 152. AMPS
VOLTG 2.26 VOLTS

ENGINE CHARGE PRESSURE
PRESUP 6626. KPA
MEANBP 6976. KPA
MEANCP 7019. KPA

GAS TEMPERATURES
TGEXP 541.1 DEG.C
TGREGH 516.3 DEG.C
TGREGC 93.5 DEG.C
TGCOMP 39.3 DEG.C
TGBOUN 37.5 DEG.C

SURFACE TEMPERATURES
T02HTR 586.5 DEG.C
T03HTR 581.9 DEG.C
T04HTR 586.1 DEG.C
T05HTR 551.6 DEG.C
T06HTR 583.9 DEG.C
T07HTR 571.8 DEG.C
T08HTR 674.6 DEG.C
T09HTR 548.9 DEG.C
T10HTR 662.3 DEG.C
T11HTR 574.7 DEG.C
T12HTR 579.2 DEG.C
T13REG 528.1 DEG.C
T14REG 493.1 DEG.C
T15REG 384.9 DEG.C
T16REG 370.7 DEG.C
T17REG 961.8 DEG.C
T18REG 367.8 DEG.C
T19REG 248.9 DEG.C
T03HED 536.9 DEG.C

HEAT TO COOLER
FLOCLR 3.65 L/MIN
TWINCL 21.6 DEG.C
TDLCL 5.82 DEG.C
TWOCLR 26.82 DEG.C

CALCULATED PARAMETERS
1 PWRIN 2193. WATTS
2 QCOOLR 1478. WATTS
3 QDSHPT 583. WATTS
4 EXTEFF 13.1 %
5 TAVHTR 591.0 DEG.C
6 INTEFF 16.3 %
8 AMPS 970. AMPS
9 QDISPG 4. WATTS
10 QDISP 14. WATTS
11 QREG1 102. WATTS
12 QREG2 102. WATTS
13 QREG3 33. WATTS

VIBRATION
VX1HOR 0.1 CM/S
VY1VER 1.4 CM/S

REMOTE CALCULATIONS
PWROUT 287. WATTS
INDPWR 324. WATTS
PISTST 1.21 CM
DISPST 1.14 CM

(X) READING 383

SERIES 0 FLUID HYDROGEN BAROM 14.155 PSI

HEAT TO DASHPOT COOLING
FLODP 5.05 L/MIN
TWINDP 18.6 DEG.C
TDLDP 1.80 DEG.C
TWODPR 20.3 DEG.C

POWER IN
AMPS1 882. AMPS
AMPS2 204. AMPS
VOLTG 2.53 VOLTS

ENGINE CHARGE PRESSURE
PRESUP 6840. KPA
MEANBP 6985. KPA
MEANCP 7021. KPA

GAS TEMPERATURES
TGEXP 543.4 DEG.C
TGREGH 515.6 DEG.C
TGREGC 93.5 DEG.C
TGCOMP 41.0 DEG.C
TGBOUN 37.0 DEG.C

SURFACE TEMPERATURES
T02HTR 594.9 DEG.C
T03HTR 588.7 DEG.C
T04HTR 596.3 DEG.C
T05HTR 556.3 DEG.C
T06HTR 589.5 DEG.C
T07HTR 588.5 DEG.C
T08HTR 600.0 DEG.C
T09HTR 557.1 DEG.C
T10HTR 677.4 DEG.C
T11HTR 580.0 DEG.C
T12HTR 585.2 DEG.C
T13REG 531.5 DEG.C
T14REG 495.6 DEG.C
T15REG 384.5 DEG.C
T16REG 372.4 DEG.C
T17REG 957.4 DEG.C
T18REG 365.8 DEG.C
T19REG 241.1 DEG.C
T03HED 520.8 DEG.C

HEAT TO COOLER
FLOCLR 3.72 L/MIN
TWINCL 21.6 DEG.C
TDLCL 6.45 DEG.C
TWOCLR 27.36 DEG.C

CALCULATED PARAMETERS
1 PWRIN 2749. WATTS
2 QCOOLR 1668. WATTS
3 QDSHPT 631. WATTS
4 EXTEFF 13.4 %
5 TAVHTR 591.4 DEG.C
6 INTEFF 18.1 %
8 AMPS 1086. AMPS
9 QDISPG 4. WATTS
10 QDISP 14. WATTS
11 QREG1 101. WATTS
12 QREG2 105. WATTS
13 QREG3 33. WATTS

VIBRATION
VX1HOR 0.1 CM/S
VY1VER 1.6 CM/S

REMOTE CALCULATIONS
PWROUT 370. WATTS
INDPWR 421. WATTS
PISTST 1.43 CM
DISPST 1.27 CM

TABLE IV. - Continued.

(Y) READING 384

SERIES 8 FLUID HYDROGEN BAROM 14.155 PSI

HEAT TO DASHPOT COOLING		POWER IN		ENGINE CHARGE PRESSURE		GAS TEMPERATURES		SURFACE TEMPERATURES	
FLODP	5.06 L/MIN	AMPS1	915. AMPS	PRESUP	6889. KPA	TGEXP	548.3 DEG.C		
		AMPS2	229. AMPS					T02HTR	600.1 DEG.C
TWINDP	18.6 DEG.C	VOLTG	2.67 VOLTS	MEANBP	6961. KPA	TGREGH	522.8 DEG.C	T03HTR	594.4 DEG.C
TDLDP	1.93 DEG.C			MEANCP	6991. KPA	TGREGC	95.1 DEG.C	T04HTR	600.9 DEG.C
TWODPR	20.4 DEG.C					TGCOMP	43.6 DEG.C	T05HTR	560.4 DEG.C
						TGBOUN	37.0 DEG.C	T06HTR	595.6 DEG.C
								T07HTR	586.3 DEG.C
								T08HTR	606.2 DEG.C
								T09HTR	560.9 DEG.C
HEAT TO COOLER		CALCULATED PARAMETERS		VIBRATION		REMOTE CALCULATIONS		T10HTR	687.0 DEG.C
FLOCLR	3.63 L/MIN	1 PWRIN	3052. WATTS	VX1HOR	0.1 CM/S	PWROUT	424. WATTS	T11HTR	586.5 DEG.C
TWINCL	21.6 DEG.C	2 QCOOLR	1810. WATTS	VY1VER	1.8 CM/S	INDPWR	486. WATTS	T12HTR	589.6 DEG.C
TDLCL	7.18 DEG.C	3 QDSHPT	679. WATTS			PISTST	1.61 CM		
TWOCLR	28.03 DEG.C	4 EXTEFF	13.9 %			DISPST	1.38 CM		
		5 TAVHTR	597.1 DEG.C					T13REG	537.3 DEG.C
		6 INTEFF	19.0 %					T14REG	501.7 DEG.C
		8 AMPS	1144. AMPS					T15REG	391.2 DEG.C
		9 QDISPG	4. WATTS					T16REG	376.5 DEG.C
		10 QDISP	14. WATTS					T17REG	953.9 DEG.C
		11 QREG1	102. WATTS					T18REG	372.9 DEG.C
		12 QREG2	104. WATTS					T19REG	246.9 DEG.C
		13 QREG3	33. WATTS						
								T03HED	529.3 DEG.C

(Z) READING 385

SERIES 8 FLUID HYDROGEN BAROM 14.155 PSI

HEAT TO DASHPOT COOLING		POWER IN		ENGINE CHARGE PRESSURE		GAS TEMPERATURES		SURFACE TEMPERATURES	
FLODP	5.06 L/MIN	AMPS1	949. AMPS	PRESUP	6877. KPA	TGEXP	546.6 DEG.C		
		AMPS2	265. AMPS					T02HTR	599.9 DEG.C
TWINDP	18.6 DEG.C	VOLTG	2.83 VOLTS	MEANBP	6945. KPA	TGREGH	524.5 DEG.C	T03HTR	595.0 DEG.C
TDLDP	2.05 DEG.C			MEANCP	6975. KPA	TGREGC	96.8 DEG.C	T04HTR	601.0 DEG.C
TWODPR	20.6 DEG.C					TGCOMP	46.7 DEG.C	T05HTR	559.0 DEG.C
						TGBOUN	36.8 DEG.C	T06HTR	597.0 DEG.C
								T07HTR	586.3 DEG.C
								T08HTR	608.3 DEG.C
								T09HTR	559.8 DEG.C
HEAT TO COOLER		CALCULATED PARAMETERS		VIBRATION		REMOTE CALCULATIONS		T10HTR	692.3 DEG.C
FLOCLR	3.70 L/MIN	1 PWRIN	3431. WATTS	VX1HOR	0.2 CM/S	PWROUT	494. WATTS	T11HTR	588.6 DEG.C
TWINCL	21.5 DEG.C	2 QCOOLR	2048. WATTS	VY1VER	2.1 CM/S	INDPWR	565. WATTS	T12HTR	588.8 DEG.C
TDLCL	7.97 DEG.C	3 QDSHPT	723. WATTS			PISTST	1.82 CM		
TWOCLR	28.83 DEG.C	4 EXTEFF	14.4 %			DISPST	1.48 CM		
		5 TAVHTR	597.8 DEG.C					T13REG	536.5 DEG.C
		6 INTEFF	19.4 %					T14REG	501.0 DEG.C
		8 AMPS	1213. AMPS					T15REG	391.5 DEG.C
		9 QDISPG	4. WATTS					T16REG	376.0 DEG.C
		10 QDISP	14. WATTS					T17REG	951.2 DEG.C
		11 QREG1	102. WATTS					T18REG	374.4 DEG.C
		12 QREG2	103. WATTS					T19REG	249.0 DEG.C
		13 QREG3	33. WATTS						
								T03HED	537.0 DEG.C

(AA) READING 386

SERIES 8 FLUID HYDROGEN BAROM 14.155 PSI

HEAT TO DASHPOT COOLING		POWER IN		ENGINE CHARGE PRESSURE		GAS TEMPERATURES		SURFACE TEMPERATURES	
FLODP	5.06 L/MIN	AMPS1	967. AMPS	PRESUP	6866. KPA	TGEXP	543.9 DEG.C		
		AMPS2	304. AMPS					T02HTR	600.5 DEG.C
TWINDP	18.6 DEG.C	VOLTG	2.96 VOLTS	MEANBP	6936. KPA	TGREGH	519.9 DEG.C	T03HTR	594.8 DEG.C
TDLDP	2.12 DEG.C			MEANCP	6957. KPA	TGREGC	99.0 DEG.C	T04HTR	599.5 DEG.C
TWODPR	20.7 DEG.C					TGCOMP	50.5 DEG.C	T05HTR	558.3 DEG.C
						TGBOUN	37.1 DEG.C	T06HTR	594.2 DEG.C
								T07HTR	587.4 DEG.C
								T08HTR	605.7 DEG.C
								T09HTR	557.5 DEG.C
HEAT TO COOLER		CALCULATED PARAMETERS		VIBRATION		REMOTE CALCULATIONS		T10HTR	695.4 DEG.C
FLOCLR	3.73 L/MIN	1 PWRIN	3769. WATTS	VX1HOR	0.2 CM/S	PWROUT	533. WATTS	T11HTR	586.1 DEG.C
TWINCL	21.6 DEG.C	2 QCOOLR	2252. WATTS	VY1VER	2.2 CM/S	INDPWR	623. WATTS	T12HTR	588.1 DEG.C
TDLCL	8.70 DEG.C	3 QDSHPT	746. WATTS			PISTST	[illegible].00 CM		
TWOCLR	29.49 DEG.C	4 EXTEFF	14.1 %			DISPST	[illegible].5[illegible] CM		
		5 TAVHTR	597.0 DEG.C					T13REG	536.0 DEG.C
		6 INTEFF	19.1 %					T14REG	501.0 DEG.C
		8 AMPS	1272. AMPS					T15REG	393.0 DEG.C
		9 QDISPG	4. WATTS					T16REG	376.7 DEG.C
		10 QDISP	14. WATTS					T17REG	949.1 DEG.C
		11 QREG1	100. WATTS					T18REG	375.8 DEG.C
		12 QREG2	102. WATTS					T19REG	252.0 DEG.C
		13 QREG3	33. WATTS						
								T03HED	539.5 DEG.C

TABLE IV. - Continued.

(BB) READING 387

SERIES 8 FLUID HYDROGEN BAROM 14.160 PSI

HEAT TO DASHPOT COOLING		POWER IN		ENGINE CHARGE PRESSURE		GAS TEMPERATURES		SURFACE TEMPERATURES	
FLODP	5.06 L/MIN	AMPS1	982. AMPS	PRESUP	6855. KPA	TGEXP	540.8 DEG.C		
		AMPS2	357. AMPS					T02HTR	597.3 DEG.C
TWINDP	18.6 DEG.C	VOLTG	3.13 VOLTS	MEANBP	6926. KPA	TGREGH	527.9 DEG.C	T03HTR	596.4 DEG.C
TDLDP	2.56 DEG.C			MEANCP	6975. KPA	TGREGC	97.1 DEG.C	T04HTR	598.7 DEG.C
TWODPR	20.8 DEG.C					TGCOMP	53.4 DEG.C	T05HTR	556.1 DEG.C
						TGBOUN	37.3 DEG.C	T06HTR	601.0 DEG.C
								T07HTR	584.1 DEG.C
								T08HTR	611.3 DEG.C
								T09HTR	555.1 DEG.C
HEAT TO COOLER		CALCULATED PARAMETERS		VIBRATION		REMOTE CALCULATIONS		T10HTR	702.1 DEG.C
FLOCLR	3.74 L/MIN	1 PWRIN	4186. WATTS	VX1HOR	0.2 CM/S	PWROUT	606. WATTS	T11HTR	592.1 DEG.C
TWINCL	21.6 DEG.C	2 QCOOLR	2528. WATTS	VY1VER	2.5 CM/S	INDPWR	697. WATTS	T12HTR	586.5 DEG.C
TDLCL	9.72 DEG.C	3 QDSHPT	832. WATTS			PISTST	2.21 CM		
TWOCLR	30.43 DEG.C	4 EXTEFF	14.5 %			DISPST	1.65 CM		
		5 TAVHTR	598.2 DEG.C					T13REG	533.6 DEG.C
		6 INTEFF	19.3 %					T14REG	498.5 DEG.C
		8 AMPS	1339. AMPS					T15REG	388.3 DEG.C
		9 QDISPG	4. WATTS					T16REG	366.5 DEG.C
		10 QDISP	14. WATTS					T17REG	946.6 DEG.C
		11 QREG1	105. WATTS					T18REG	377.6 DEG.C
		12 QREG2	98. WATTS					T19REG	248.0 DEG.C
		13 QREG3	33. WATTS						
								T03HED	548.5 DEG.C

(CC) READING 388

SERIES 8 FLUID HYDROGEN BAROM 14.155 PSI

HEAT TO DASHPOT COOLING		POWER IN		ENGINE CHARGE PRESSURE		GAS TEMPERATURES		SURFACE TEMPERATURES	
FLODP	5.06 L/MIN	AMPS1	994. AMPS	PRESUP	6842. KPA	TGEXP	537.8 DEG.C		
		AMPS2	405. AMPS					T02HTR	592.8 DEG.C
TWINDP	18.5 DEG.C	VOLTG	3.27 VOLTS	MEANBP	6921. KPA	TGREGH	532.2 DEG.C	T03HTR	594.7 DEG.C
TDLDP	2.43 DEG.C			MEANCP	6957. KPA	TGREGC	101.6 DEG.C	T04HTR	600.1 DEG.C
TWODPR	21.0 DEG.C					TGCOMP	56.7 DEG.C	T05HTR	550.4 DEG.C
						TGBOUN	37.6 DEG.C	T06HTR	603.8 DEG.C
								T07HTR	579.8 DEG.C
								T08HTR	615.6 DEG.C
								T09HTR	556.3 DEG.C
HEAT TO COOLER		CALCULATED PARAMETERS		VIBRATION		REMOTE CALCULATIONS		T10HTR	704.0 DEG.C
FLOCLR	3.76 L/MIN	1 PWRIN	4572. WATTS	VX1HOR	0.2 CM/S	PWROUT	664. WATTS	T11HTR	597.1 DEG.C
TWINCL	21.6 DEG.C	2 QCOOLR	2781. WATTS	VY1VER	2.6 CM/S	INDPWR	757. WATTS	T12HTR	581.3 DEG.C
TDLCL	10.64 DEG.C	3 QDSHPT	855. WATTS			PISTST	2.39 CM		
TWOCLR	31.43 DEG.C	4 EXTEFF	14.5 %			DISPST	1.74 CM		
		5 TAVHTR	597.8 DEG.C					T13REG	527.8 DEG.C
		6 INTEFF	19.3 %					T14REG	492.1 DEG.C
		8 AMPS	1399. AMPS					T15REG	379.4 DEG.C
		9 QDISPG	4. WATTS					T16REG	371.2 DEG.C
		10 QDISP	14. WATTS					T17REG	943.7 DEG.C
		11 QREG1	111. WATTS					T18REG	378.5 DEG.C
		12 QREG2	92. WATTS					T19REG	241.4 DEG.C
		13 QREG3	33. WATTS						
								T03HED	538.7 DEG.C

(DD) READING 389

SERIES 8 FLUID HYDROGEN BAROM 14.155 PSI

HEAT TO DASHPOT COOLING		POWER IN		ENGINE CHARGE PRESSURE		GAS TEMPERATURES		SURFACE TEMPERATURES	
FLODP	5.05 L/MIN	AMPS1	1001. AMPS	PRESUP	6827. KPA	TGEXP	534.9 DEG.C		
		AMPS2	455. AMPS					T02HTR	591.6 DEG.C
TWINDP	18.6 DEG.C	VOLTG	3.41 VOLTS	MEANBP	6918. KPA	TGREGH	532.7 DEG.C	T03HTR	594.0 DEG.C
TDLDP	2.56 DEG.C			MEANCP	6966. KPA	TGREGC	108.0 DEG.C	T04HTR	602.6 DEG.C
TWODPR	21.0 DEG.C					TGCOMP	60.3 DEG.C	T05HTR	547.8 DEG.C
						TGBOUN	38.4 DEG.C	T06HTR	604.3 DEG.C
								T07HTR	579.8 DEG.C
								T08HTR	618.3 DEG.C
								T09HTR	558.1 DEG.C
HEAT TO COOLER		CALCULATED PARAMETERS		VIBRATION		REMOTE CALCULATIONS		T10HTR	707.6 DEG.C
FLOCLR	3.73 L/MIN	1 PWRIN	4962. WATTS	VX1HOR	0.2 CM/S	PWROUT	[illegible] WATTS	T11HTR	599.8 DEG.C
TWINCL	21.6 DEG.C	2 QCOOLR	2991. WATTS	VY1VER	2.8 CM/S	INDPWR	[illegible] WATTS	T12HTR	579.6 DEG.C
TDLCL	11.54 DEG.C	3 QDSHPT	899. WATTS			PISTST	[illegible].60 CM		
TWOCLR	32.27 DEG.C	4 EXTEFF	13.6 %			DISPST	[illegible].79 CM		
		5 TAVHTR	598.4 DEG.C					T13REG	524.9 DEG.C
		6 INTEFF	18.4 %					T14REG	488.9 DEG.C
		8 AMPS	1456. AMPS					T15REG	376.1 DEG.C
		9 QDISPG	4. WATTS					T16REG	378.8 DEG.C
		10 QDISP	13. WATTS					T17REG	941.0 DEG.C
		11 QREG1	111. WATTS					T18REG	376.7 DEG.C
		12 QREG2	91. WATTS					T19REG	239.6 DEG.C
		13 QREG3	33. WATTS						
								T03HED	531.2 DEG.C

TABLE IV. - Continued.

(EE) READING 390

SERIES 8 FLUID HYDROGEN BAROM 14.155 PSI

HEAT TO DASHPOT COOLING	POWER IN	ENGINE CHARGE PRESSURE	GAS TEMPERATURES	SURFACE TEMPERATURES
FLODP 5.84 L/MIN	AMPS1 1013. AMPS	PRESUP 6759. KPA	TGEXP 531.9 DEG.C	
	AMPS2 531. AMPS			T02HTR 594.4 DEG.C
TWINDP 18.5 DEG.C	VOLTG 3.60 VOLTS	MEANBP 6918. KPA	TGREGH 533.2 DEG.C	T03HTR 596.1 DEG.C
TDLDP 2.60 DEG.C		MEANCP 6943. KPA	TGREGC 114.0 DEG.C	T04HTR 606.3 DEG.C
TWODPR 21.2 DEG.C			TGCOMP 65.6 DEG.C	T05HTR 548.6 DEG.C
			TGBOUN 38.6 DEG.C	T06HTR 606.5 DEG.C
				T07HTR 582.7 DEG.C
				T08HTR 621.9 DEG.C
				T09HTR 561.1 DEG.C
HEAT TO COOLER	CALCULATED PARAMETERS	VIBRATION	REMOTE CALCULATIONS	T10HTR 714.9 DEG.C
FLOCLR 3.70 L/MIN	1 PWRIN 5560. WATTS	VX1HOR 0.2 CM/S	PWROUT 714. WATTS	T11HTR 603.8 DEG.C
TWINCL 21.7 DEG.C	2 QCOOLR 3327. WATTS	VY1VER 3.0 CM/S	INDPWR 875. WATTS	T12HTR 580.5 DEG.C
TDLCL 12.93 DEG.C	3 QDSHPT 910. WATTS		PISTST 2.78 CM	
TWOCLR 33.85 DEG.C	4 EXTEFF 12.8 %		DISPST 1.92 CM	
	5 TAVHTR 601.5 DEG.C			T13REG 524.4 DEG.C
	6 INTEFF 17.7 %			T14REG 489.0 DEG.C
	8 AMPS 1543. AMPS			T15REG 378.4 DEG.C
	9 QDISPG 4. WATTS			T16REG 383.6 DEG.C
	10 QDISP 13. WATTS			T17REG 937.9 DEG.C
	11 QREG1 108. WATTS			T18REG 377.1 DEG.C
	12 QREG2 91. WATTS			T19REG 244.1 DEG.C
	13 QREG3 32. WATTS			
				T03HED 524.4 DEG.C

(FF) READING 391

SERIES 8 FLUID HYDROGEN BAROM 14.155 PSI

HEAT TO DASHPOT COOLING	POWER IN	ENGINE CHARGE PRESSURE	GAS TEMPERATURES	SURFACE TEMPERATURES
FLODP 5.04 L/MIN	AMPS1 1016. AMPS	PRESUP 6669. KPA	TGEXP 530.3 DEG.C	
	AMPS2 587. AMPS			T02HTR 594.1 DEG.C
TWINDP 18.5 DEG.C	VOLTG 3.74 VOLTS	MEANBP 6918. KPA	TGREGH 531.3 DEG.C	T03HTR 594.9 DEG.C
TDLDP 2.73 DEG.C		MEANCP 6966. KPA	TGREGC 116.0 DEG.C	T04HTR 606.1 DEG.C
TWODPR 21.2 DEG.C			TGCOMP 69.0 DEG.C	T05HTR 545.6 DEG.C
			TGBOUN 39.0 DEG.C	T06HTR 605.0 DEG.C
				T07HTR 582.4 DEG.C
				T08HTR 621.3 DEG.C
				T09HTR 559.8 DEG.C
HEAT TO COOLER	CALCULATED PARAMETERS	VIBRATION	REMOTE CALCULATIONS	T10HTR 717.3 DEG.C
FLOCLR 3.74 L/MIN	1 PWRIN 5998. WATTS	VX1HOR 0.2 CM/S	PWROUT 707. WATTS	T11HTR 603.1 DEG.C
TWINCL 21.7 DEG.C	2 QCOOLR 3540. WATTS	VY1VER 3.2 CM/S	INDPWR 907. WATTS	T12HTR 578.4 DEG.C
TDLCL 13.62 DEG.C	3 QDSHPT 956. WATTS		PISTST 2.97 CM	
TWOCLR 34.48 DEG.C	4 EXTEFF 11.8 %		DISPST 1.98 CM	
	5 TAVHTR 600.7 DEG.C			T13REG 523.1 DEG.C
	6 INTEFF 16.6 %			T14REG 487.5 DEG.C
	8 AMPS 1603. AMPS			T15REG 378.2 DEG.C
	9 QDISPG 4. WATTS			T16REG 383.8 DEG.C
	10 QDISP 13. WATTS			T17REG 935.5 DEG.C
	11 QREG1 107. WATTS			T18REG 376.5 DEG.C
	12 QREG2 90. WATTS			T19REG 244.8 DEG.C
	13 QREG3 32. WATTS			
				T03HED 517.4 DEG.C

(GG) READING 407

SERIES 8 FLUID HYDROGEN BAROM 14.204 PSI

HEAT TO DASHPOT COOLING	POWER IN	ENGINE CHARGE PRESSURE	GAS TEMPERATURES	SURFACE TEMPERATURES
FLODP 4.84 L/MIN	AMPS1 851. AMPS	PRESUP 6761. KPA	TGEXP 561.2 DEG.C	T01HTR 604.1 DEG.C
	AMPS2 396. AMPS			T02HTR 603.2 DEG.C
TWINDP 23.5 DEG.C	VOLTG 2.88 VOLTS	MEANBP 6978. KPA	TGREGH 554.2 DEG.C	
TDLDP 1.24 DEG.C		MEANCP 7023. KPA	TGREGC 112.5 DEG.C	T04HTR 606.4 DEG.C
TWODPR 24.7 DEG.C			TGCOMP 55.0 DEG.C	T05HTR 598.2 DEG.C
			TGBOUN 35.2 DEG.C	T06HTR 617.0 DEG.C
				T07HTR 601.6 DEG.C
				T08HTR 608.1 DEG.C
				T09HTR 588.5 DEG.C
HEAT TO COOLER	CALCULATED PARAMETERS	VIBRATION	REMOTE CALCULATIONS	T10HTR 595.0 DEG.C
FLOCLR 5.04 L/MIN	1 PWRIN 3590. WATTS	VX1HOR 0.1 CM/S	PWROUT [illegible] WATTS	T11HTR 587.2 DEG.C
TWINCL 32.2 DEG.C	2 QCOOLR 2323. WATTS	VY1VER 1.9 CM/S	INDPWR [illegible] WATTS	T12HTR 596.7 DEG.C
TDLCL 6.66 DEG.C	3 QDSHPT 416. WATTS		PISTST 1.73 CM	
TWOCLR 38.44 DEG.C	4 EXTEFF 9.7 %		DISPST 1.50 CM	
	5 TAVHTR 599.2 DEG.C			T13REG 530.9 DEG.C
	6 INTEFF 13.0 %			T14REG 482.9 DEG.C
	8 AMPS 1247. AMPS			T15REG 369.8 DEG.C
	9 QDISPG 4. WATTS			T16REG 375.4 DEG.C
	10 QDISP 14. WATTS			T17REG 401.4 DEG.C
	11 QREG1 83. WATTS			T18REG 349.4 DEG.C
	12 QREG2 108. WATTS			T19REG 246.8 DEG.C
	13 QREG3 34. WATTS			

TABLE IV. - Continued.

(HH) READING 408

SERIES 0 FLUID HYDROGEN BAROM 14.204 PSI

HEAT TO DASHPOT COOLING		POWER IN		ENGINE CHARGE PRESSURE		GAS TEMPERATURES		SURFACE TEMPERATURES	
FLODP	4.82 L/MIN	AMPS1	855. AMPS	PRESUP	6771. KPA	TGEXP	556.8 DEG.C	T01HTR	604.6 DEG.C
		AMPS2	493. AMPS					T02HTR	603.9 DEG.C
TWINDP	23.5 DEG.C	VOLTG	3.10 VOLTS	MEANBP	6983. KPA	TGREGH	552.1 DEG.C		
TDLDP	1.62 DEG.C			MEANCP	7033. KPA	TGREGC	115.6 DEG.C	T04HTR	605.9 DEG.C
TWODPR	25.1 DEG.C					TGCOMP	57.7 DEG.C	T05HTR	600.1 DEG.C
						TGBOUN	35.8 DEG.C	T06HTR	616.6 DEG.C
								T07HTR	603.5 DEG.C
								T08HTR	598.2 DEG.C
								T09HTR	588.5 DEG.C
HEAT TO COOLER		CALCULATED PARAMETERS		VIBRATION		REMOTE CALCULATIONS		T10HTR	594.8 DEG.C
FLOCLR	5.06 L/MIN	1 PWRIN	4183. WATTS	VX1HOR	0.1 CM/S	PWROUT	515. WATTS	T11HTR	586.0 DEG.C
TWINCL	32.5 DEG.C	2 QCOOLR	2624. WATTS	VY1VER	2.2 CM/S	INDPWR	556. WATTS	T12HTR	596.8 DEG.C
TDLCL	7.50 DEG.C	3 QDSHPT	542. WATTS			PISTST	1.94 CM		
TWOCLR	39.22 DEG.C	4 EXTEFF	12.3 %			DISPST	1.62 CM		
		5 TAVHTR	599.4 DEG.C					T13REG	529.8 DEG.C
		6 INTEFF	16.4 %					T14REG	482.3 DEG.C
		8 AMPS	1348. AMPS					T15REG	370.9 DEG.C
		9 QDISPG	4. WATTS					T16REG	375.9 DEG.C
		10 QDISP	14. WATTS					T17REG	403.0 DEG.C
		11 QREG1	82. WATTS					T18REG	351.7 DEG.C
		12 QREG2	106. WATTS					T19REG	250.3 DEG.C
		13 QREG3	34. WATTS						

(II) READING 409

SERIES 0 FLUID HYDROGEN BAROM 14.204 PSI

HEAT TO DASHPOT COOLING		POWER IN		ENGINE CHARGE PRESSURE		GAS TEMPERATURES		SURFACE TEMPERATURES	
FLODP	4.82 L/MIN	AMPS1	852. AMPS	PRESUP	6780. KPA	TGEXP	552.8 DEG.C	T01HTR	608.3 DEG.C
		AMPS2	626. AMPS					T02HTR	603.3 DEG.C
TWINDP	23.5 DEG.C	VOLTG	3.41 VOLTS	MEANBP	6996. KPA	TGREGH	551.0 DEG.C		
TDLDP	1.89 DEG.C			MEANCP	7037. KPA	TGREGC	119.4 DEG.C	T04HTR	605.0 DEG.C
TWODPR	25.3 DEG.C					TGCOMP	62.4 DEG.C	T05HTR	601.9 DEG.C
						TGBOUN	36.8 DEG.C	T06HTR	619.1 DEG.C
								T07HTR	605.1 DEG.C
								T08HTR	595.7 DEG.C
								T09HTR	588.5 DEG.C
HEAT TO COOLER		CALCULATED PARAMETERS		VIBRATION		REMOTE CALCULATIONS		T10HTR	595.0 DEG.C
FLOCLR	5.07 L/MIN	1 PWRIN	5046. WATTS	VX1HOR	0.1 CM/S	PWROUT	725. WATTS	T11HTR	584.4 DEG.C
TWINCL	32.3 DEG.C	2 QCOOLR	2984. WATTS	VY1VER	2.5 CM/S	INDPWR	693. WATTS	T12HTR	595.8 DEG.C
TDLCL	8.51 DEG.C	3 QDSHPT	634. WATTS			PISTST	2.24 CM		
TWOCLR	40.17 DEG.C	4 EXTEFF	16.4 %			DISPST	1.83 CM		
		5 TAVHTR	599.9 DEG.C					T13REG	527.8 DEG.C
		6 INTEFF	19.5 %					T14REG	480.3 DEG.C
		8 AMPS	1478. AMPS					T15REG	370.6 DEG.C
		9 QDISPG	4. WATTS					T16REG	375.1 DEG.C
		10 QDISP	14. WATTS					T17REG	404.3 DEG.C
		11 QREG1	81. WATTS					T18REG	353.8 DEG.C
		12 QREG2	103. WATTS					T19REG	252.6 DEG.C
		13 QREG3	33. WATTS						

(JJ) READING 411

SERIES 0 FLUID HYDROGEN BAROM 14.204 PSI

HEAT TO DASHPOT COOLING		POWER IN		ENGINE CHARGE PRESSURE		GAS TEMPERATURES		SURFACE TEMPERATURES	
FLODP	4.81 L/MIN	AMPS1	854. AMPS	PRESUP	6805. KPA	TGEXP	550.2 DEG.C	T01HTR	608.9 DEG.C
		AMPS2	714. AMPS					T02HTR	604.4 DEG.C
TWINDP	23.5 DEG.C	VOLTG	3.62 VOLTS	MEANBP	7018. KPA	TGREGH	546.7 DEG.C		
TDLDP	1.98 DEG.C			MEANCP	7130. KPA	TGREGC	124.9 DEG.C	T04HTR	603.2 DEG.C
TWODPR	25.5 DEG.C					TGCOMP	71.0 DEG.C	T05HTR	605.9 DEG.C
						TGBOUN	41.8 DEG.C	T06HTR	619.0 DEG.C
								T07HTR	607.2 DEG.C
								T08HTR	591.9 DEG.C
								T09HTR	587.3 DEG.C
HEAT TO COOLER		CALCULATED PARAMETERS		VIBRATION		REMOTE CALCULATIONS		T10HTR	597.0 DEG.C
FLOCLR	5.12 L/MIN	1 PWRIN	5677. WATTS	VX1HOR	0.1 CM/S	PWROUT	445. WATTS	T11HTR	580.8 DEG.C
TWINCL	32.4 DEG.C	2 QCOOLR	3651. WATTS	VY1VER	2.9 CM/S	INDPWR	756. WATTS	T12HTR	597.9 DEG.C
TDLCL	10.30 DEG.C	3 QDSHPT	661. WATTS			PISTST	2.62 CM		
TWOCLR	42.14 DEG.C	4 EXTEFF	7.8 %			DISPST	1.90 CM		
		5 TAVHTR	600.3 DEG.C					T13REG	529.9 DEG.C
		6 INTEFF	10.9 %					T14REG	482.5 DEG.C
		8 AMPS	1568. AMPS					T15REG	375.1 DEG.C
		9 QDISPG	4. WATTS					T16REG	373.8 DEG.C
		10 QDISP	14. WATTS					T17REG	404.9 DEG.C
		11 QREG1	80. WATTS					T18REG	358.0 DEG.C
		12 QREG2	101. WATTS					T19REG	259.9 DEG.C
		13 QREG3	33. WATTS						

TABLE IV. - Concluded.

(KK) READING 412

SERIES 8 FLUID HYDROGEN BAROM 14.204 PSI

HEAT TO DASHPOT COOLING		POWER IN		ENGINE CHARGE PRESSURE		GAS TEMPERATURES		SURFACE TEMPERATURES	
FLODP	4.80 L/MIN	AMPS1	856. AMPS	PRESUP	6808. KPA	TGEXP	551.7 DEG.C	T01HTR	609.3 DEG.C
		AMPS2	681. AMPS					T02HTR	606.3 DEG.C
TWINDP	23.6 DEG C	VOLTG	3.55 VOLTS	MEANBP	7019. KPA	TGREGH	547.9 DEG.C		
TDLDP	2.02 DEG C			MEANCP	7112. KPA	TGREGC	123.8 DEG.C	T04HTR	605.8 DEG.C
TWODPR	25.7 DEG.C					TGCOMP	70.4 DEG.C	T05HTR	606.3 DEG.C
						TGBOUN	42.9 DEG.C	T06HTR	619.6 DEG.C
								T07HTR	608.6 DEG C
								T08HTR	594.7 DEG.C
								T09HTR	589.4 DEG.C
HEAT TO COOLER		CALCULATED PARAMETERS		VIBRATION		REMOTE CALCULATIONS		T10HTR	597.5 DEG.C
FLOCLR	5.12 L/MIN	1 PWRIN	5452. WATTS	VX1HOR	0.2 CM/S	PWROUT	235. WATTS	T11HTR	583.4 DEG.C
TWINCL	32.4 DEG C	2 QCOOLR	3542 WATTS	VY1VER	2.7 CM/S	INDPWR	701. WATTS	T12HTR	599.0 DEG.C
TDLCL	9.99 DEG C	3 QDSHPT	673. WATTS			PISTST	2.51 CM		
TWOCLR	41.91 DEG.C	4 EXTEFF	4.3 %			DISPST	1.85 CM		
		5 TAVHTR	601.6 DEG.C						
		6 INTEFF	6.2 %					T13REG	528.3 DEG.C
		8 AMPS	1537. AMPS					T14REG	480.8 DEG.C
		9 QDISPG	4. WATTS					T15REG	372.4 DEG.C
		10 QDISP	14. WATTS					T16REG	373.7 DEG.C
		11 QREG1	80. WATTS					T17REG	484.0 DEG.C
		12 QREG2	102. WATTS					T18REG	355.5 DEG.C
		13 QREG3	33. WATTS					T19REG	257.1 DEG.C

TABLE V. - RE-1000 ENGINE RUN DATA

Date	9/20/79
Pressure, kPa	7000
Frequency, Hz	30.2
PWROUT, W	1000
Displacer phase, °C	47.6
T19REG, °C	260
T18REG, °C	510
T13REG, °C	540
T03HED, °C	550
T01HTR, °C	570
T04HTR, °C	580
T07HTR, °C	590
T10HTR, °C	600
Pressure phase, °C	25.9
PWRIN, kW	4.19
INDPWR, W	1100
TGCOMP, °C	40
DISTST, cm	2.32
DISPST, cm	2.55
Pressure amplitude, kPa	850
EXTEFF, percent	27.4

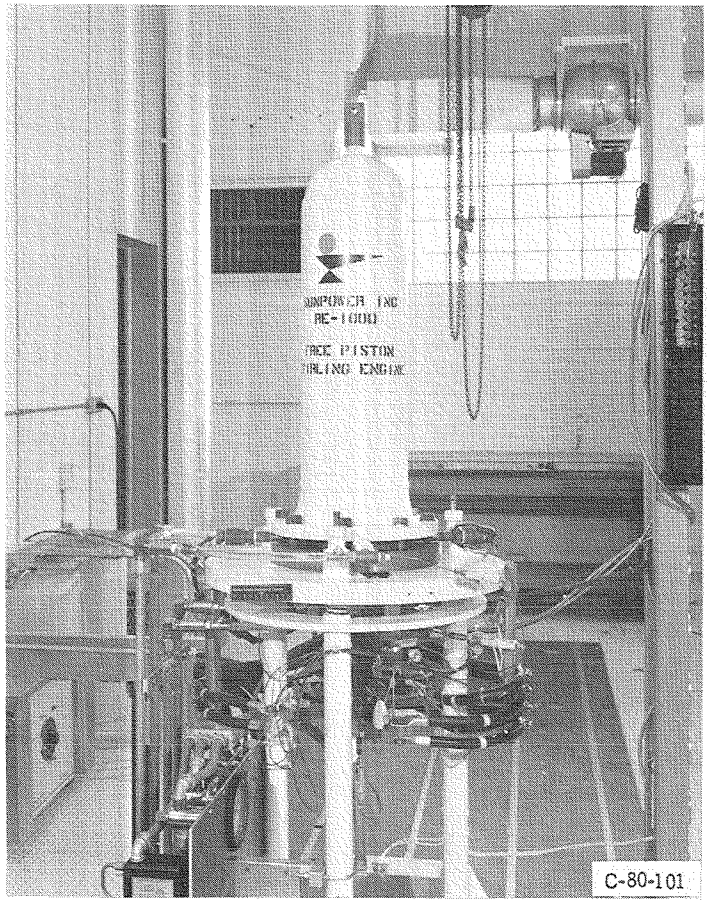

Figure 1. - RE-1000 Free Piston Stirling Engine in test cell.

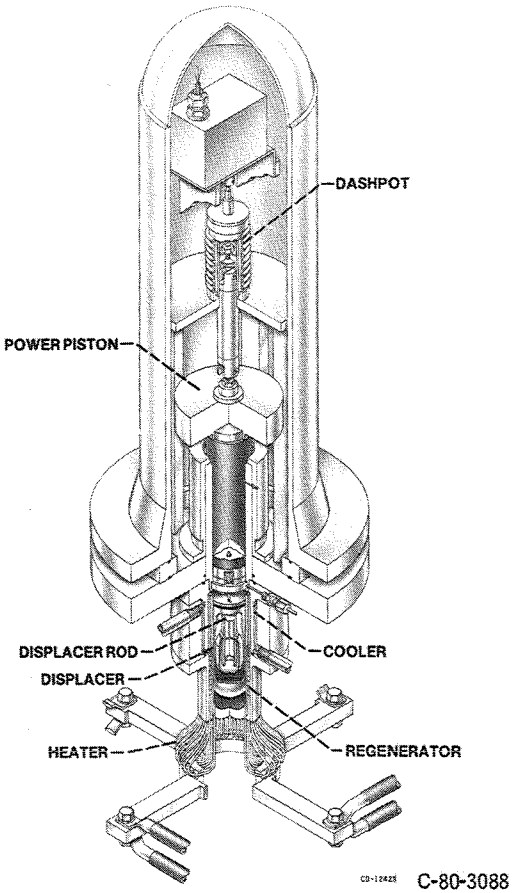

Figure 2. - Component layout of RE-1000 Free Piston Stirling Engine.

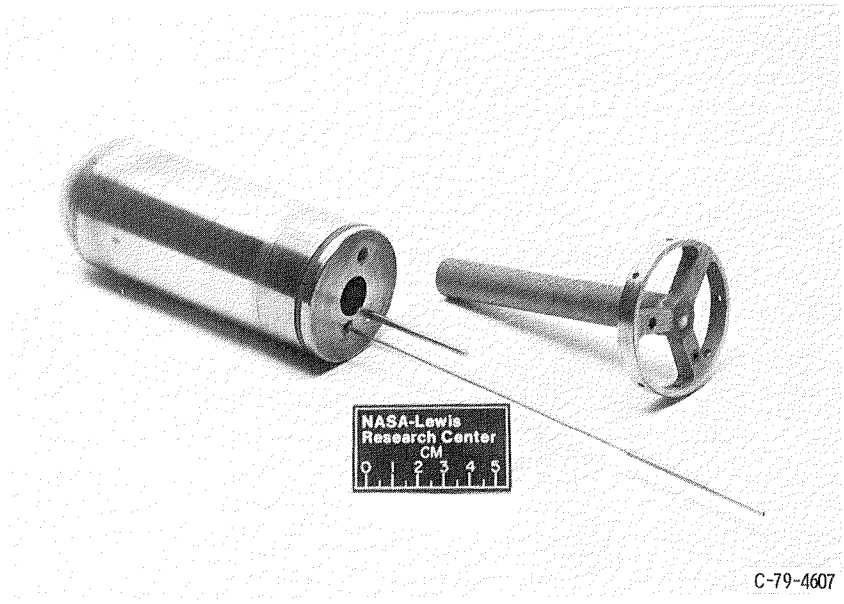

Figure 3. - Displacer and displacer rod 1.

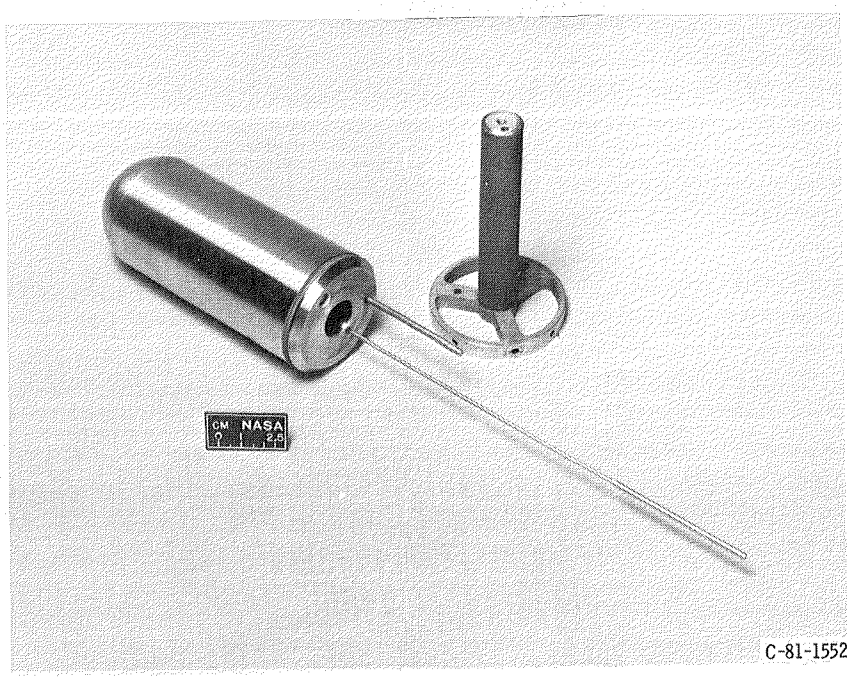

Figure 4. - Displacer and displacer rod 2.

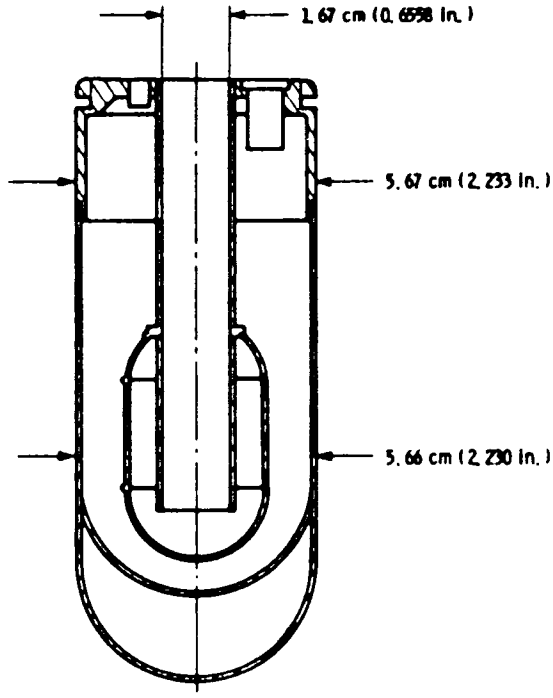

Figure 5. - Displacer 1 cross section. Displacer weight, 426 g (0.94 lb); gas spring mean volume, 31.79 cm^3 (1.94 in^3).

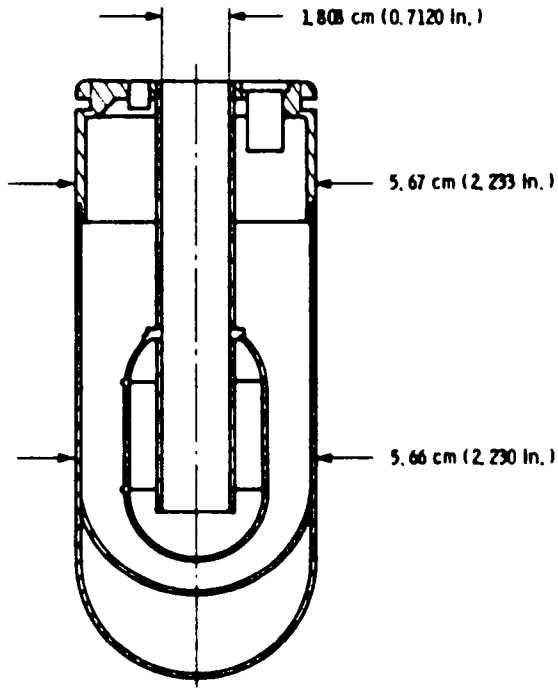

Figure 6. - Displacer 2 cross section. Displacer weight, 381.3 g (0.84 lb), gas spring mean volume, 14.9 cm^3 (0.91 in^3).

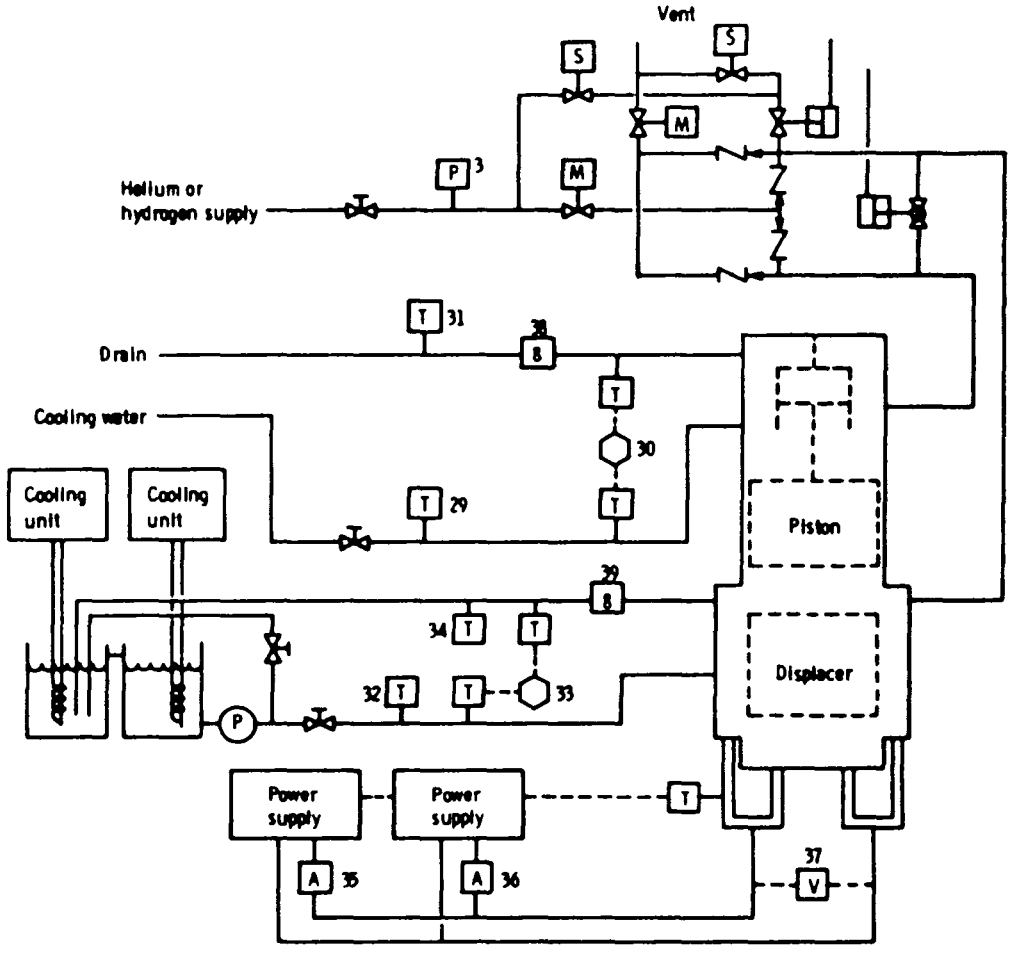

Figure 7. - RE-1000 test schematic.

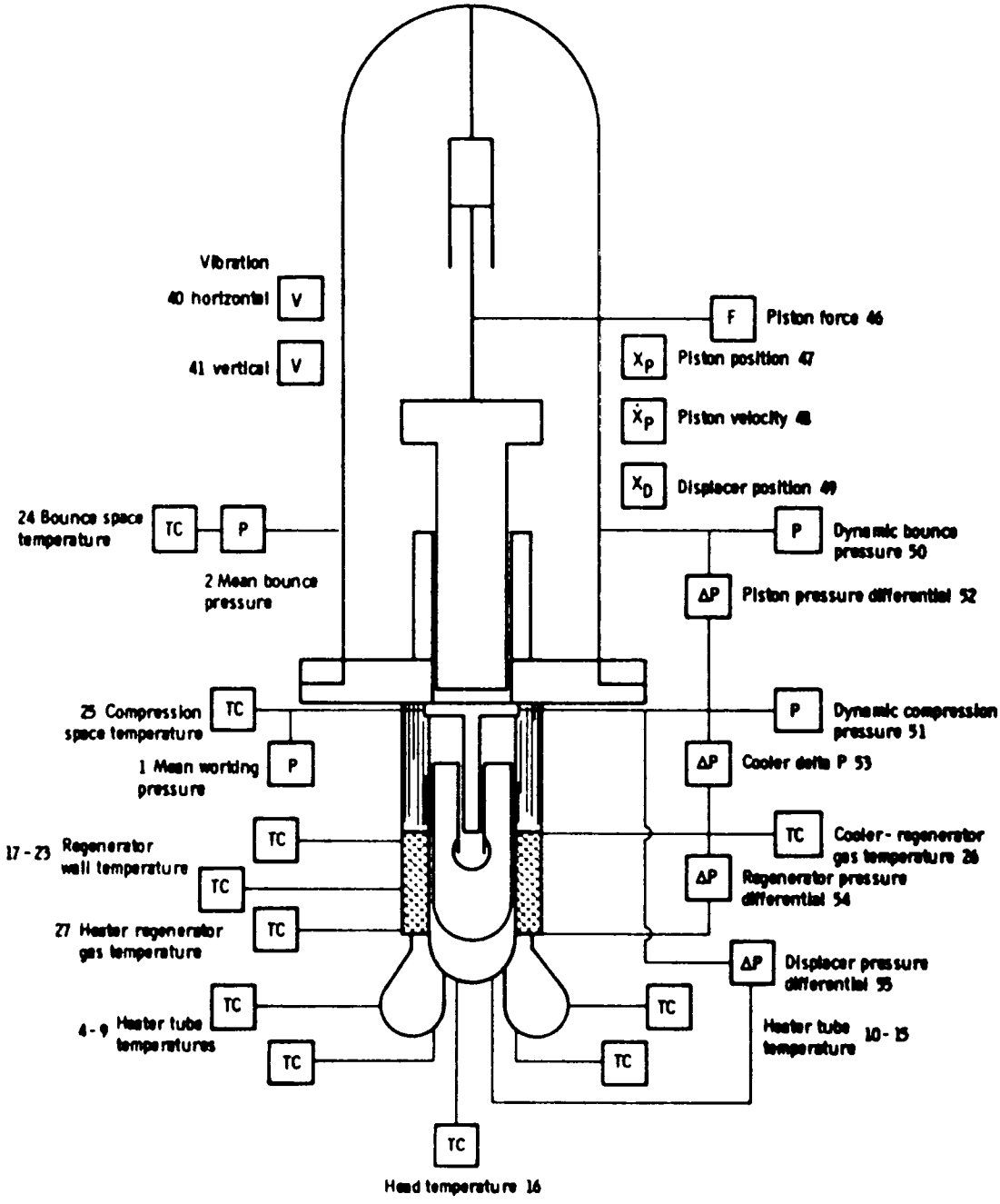

Figure 8. - Instrumentation layout of RE-1000.

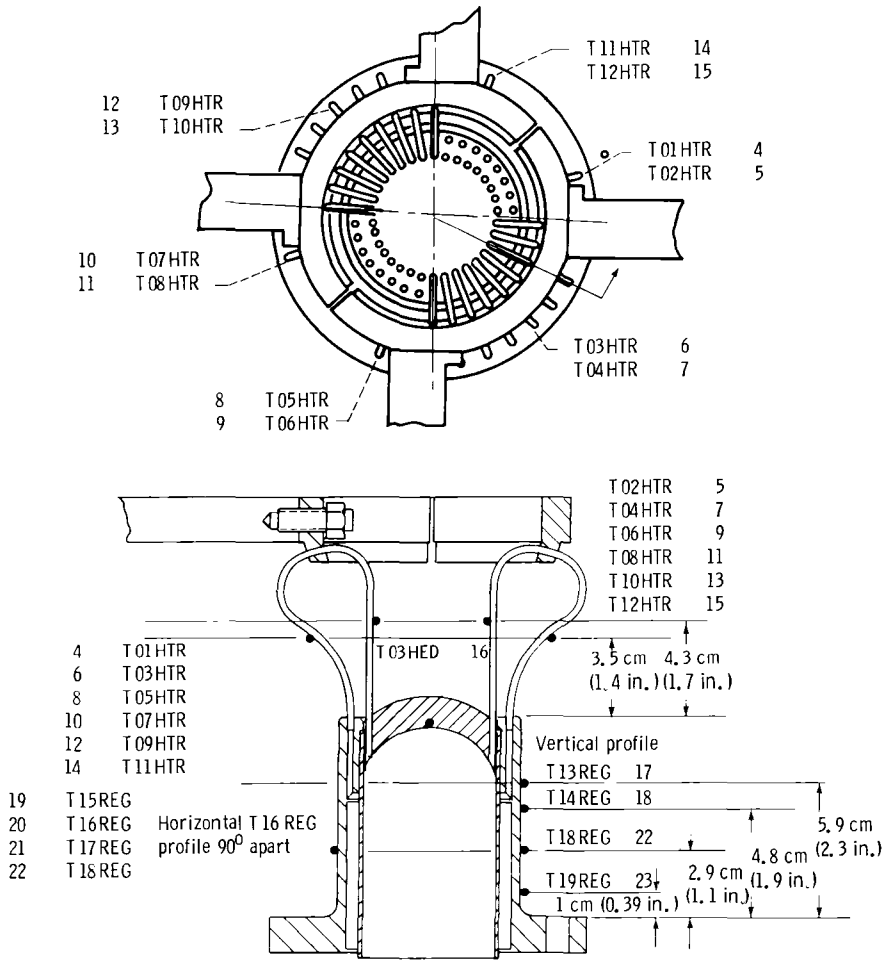

Figure 9. - RE-1000 heater head thermocouple locations.

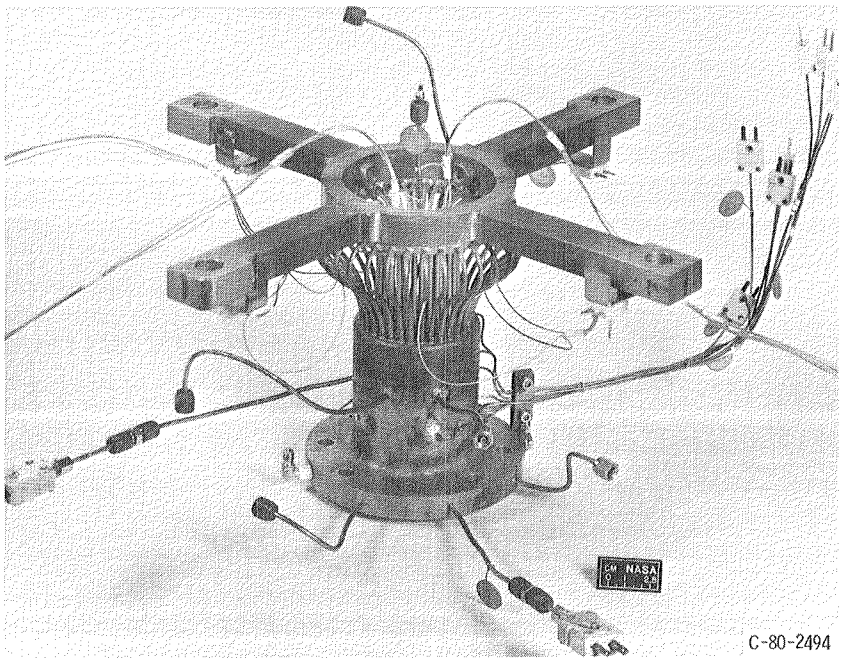

Figure 10. - RE-1000 heater head.

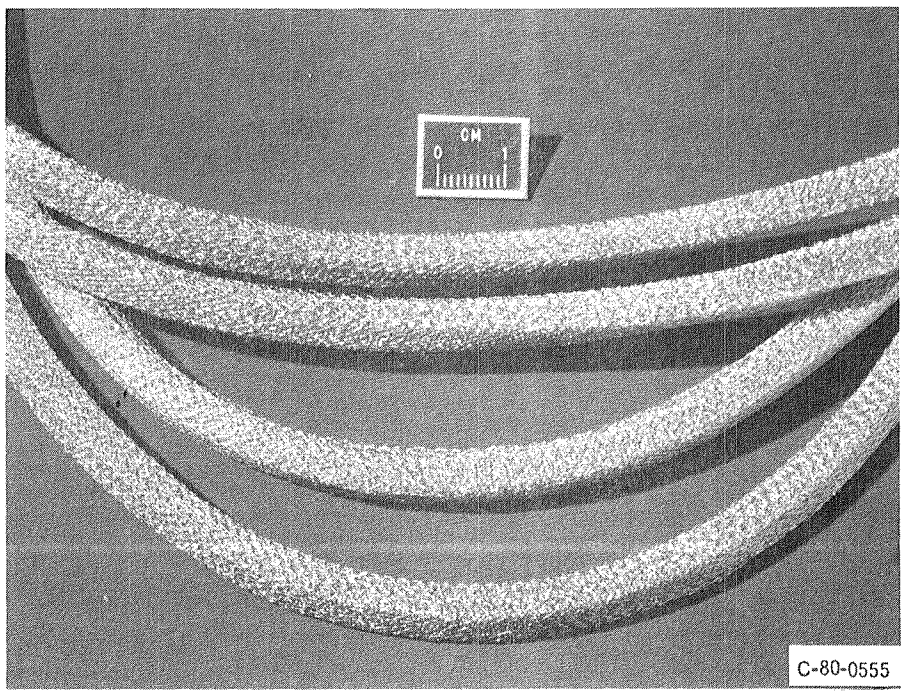

Figure 11. - Metex knitted regenerator matrix.

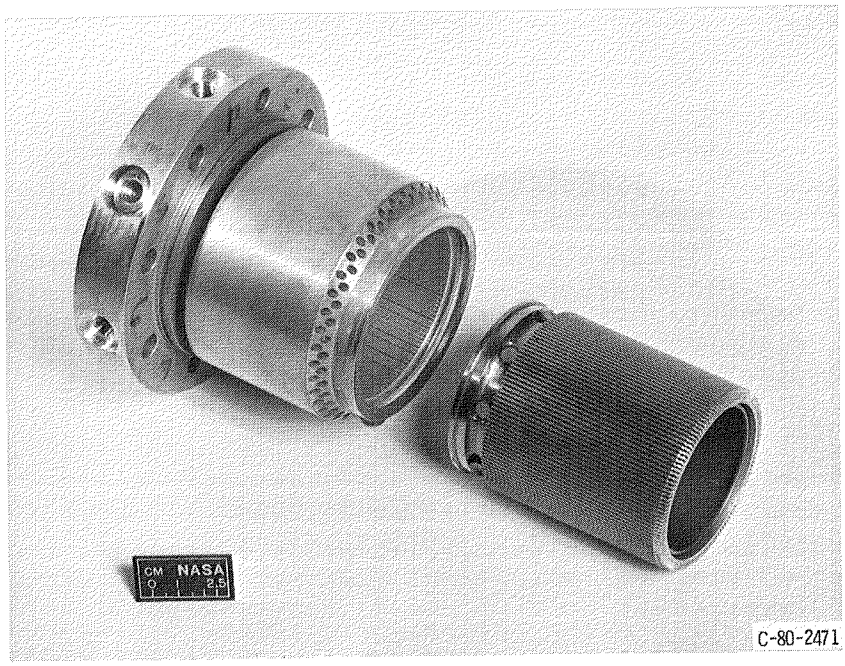

Figure 12. - RE-1000 cooler and housing.

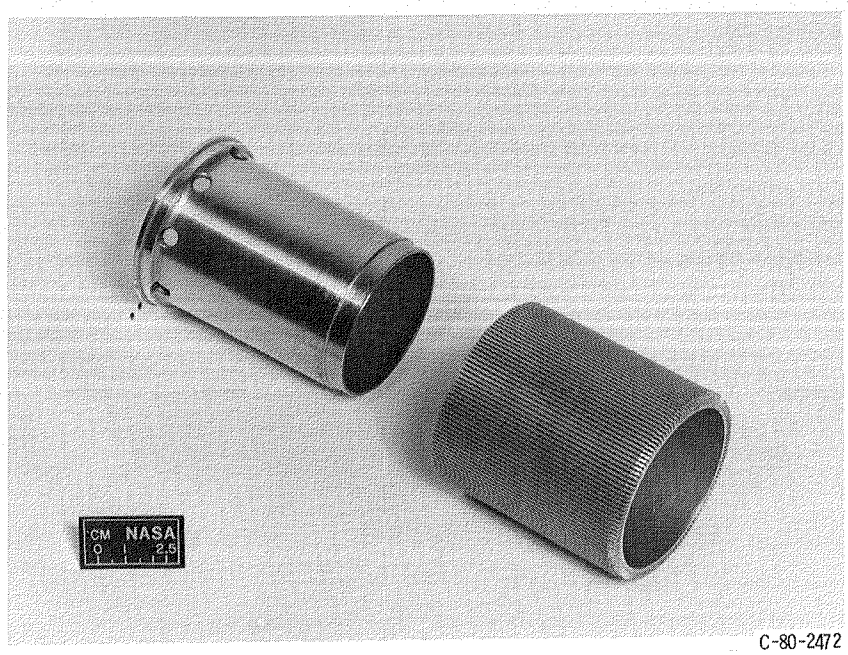

Figure 13. - Displacer cylinder and cooler gas passages.

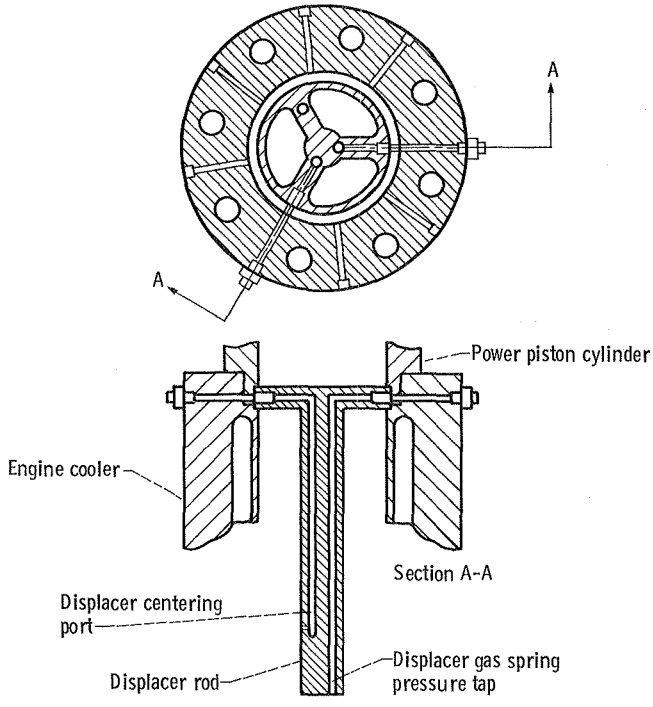

Figure 14. - Displacer rod mounting and communication ports.

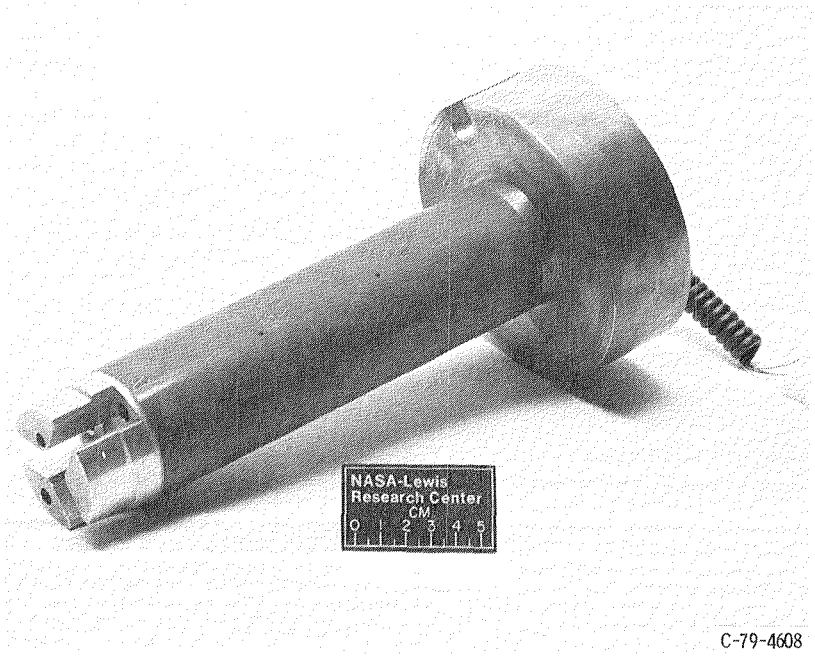

Figure 15. - Power piston.

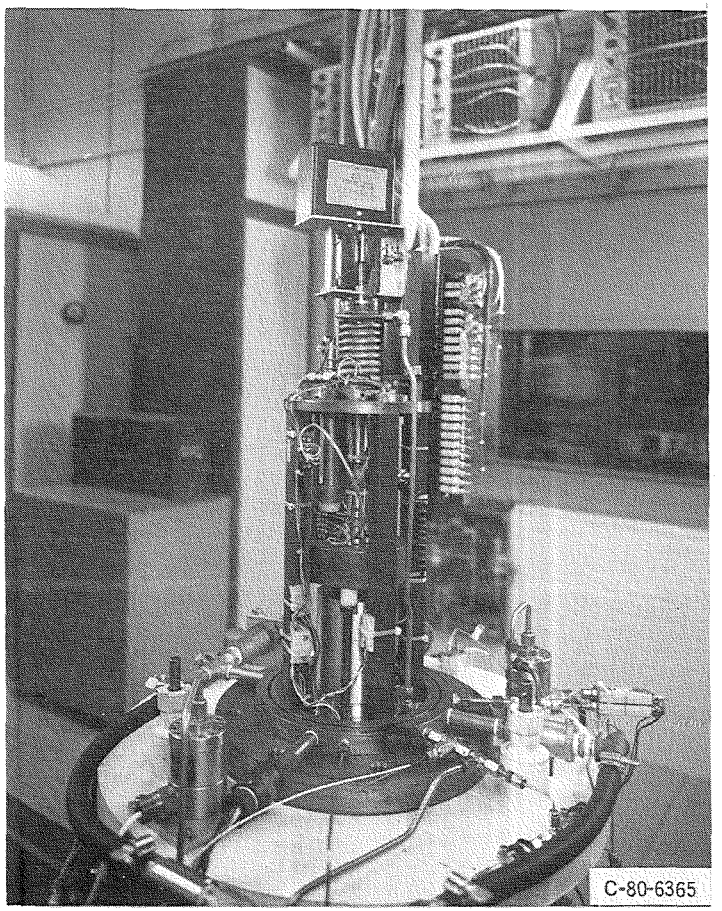

Figure 16. - RE-1000 in test cell with pressure vessel removed.

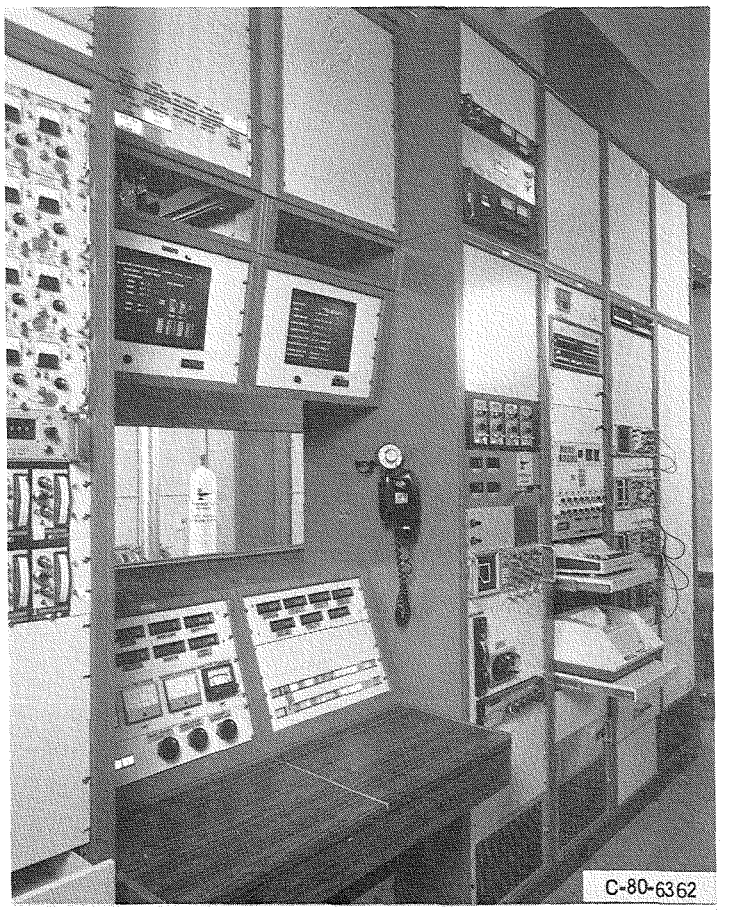

Figure 17. - Control room.

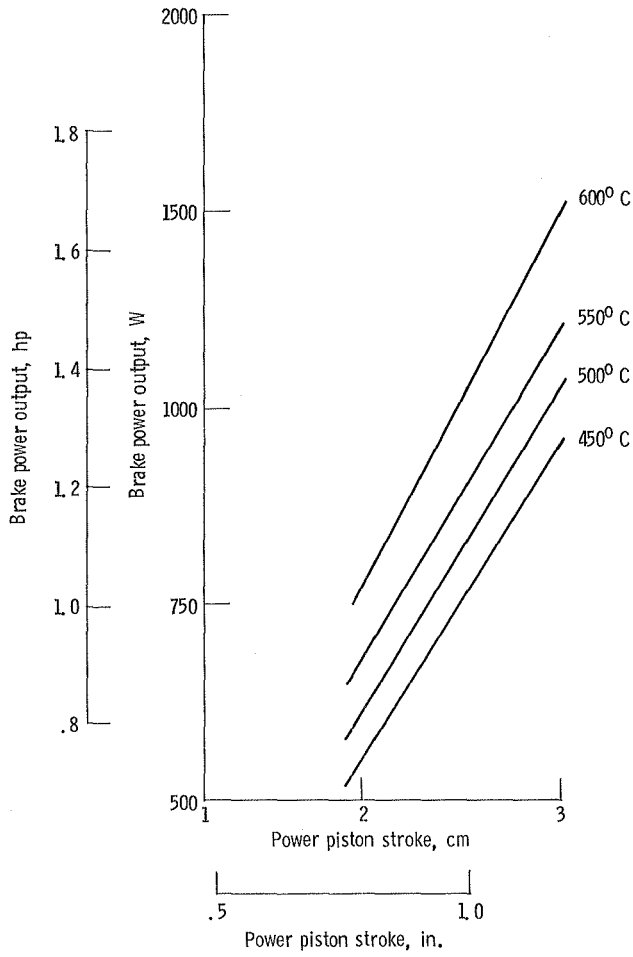

Figure 18. - Engine performance as a function of power piston stroke, as predicted by computer simulation with helium at 7.0 MPa; 139-g regenerator; displacer 1.

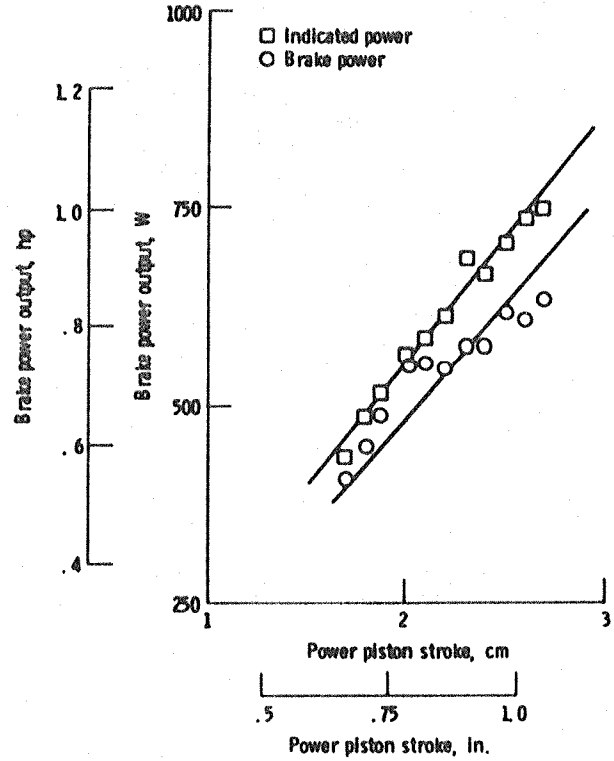

Figure 19. - Engine performance as a function of power piston stroke with helium at 7.0 MPa, 550° C; 139-g regenerator; displacer 1; Escort points 177 to 187.

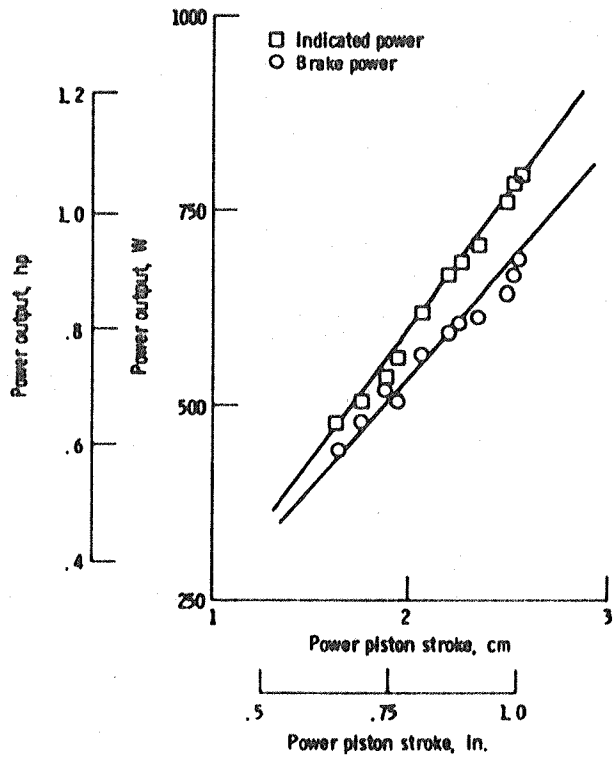

Figure 20. - Engine performance as a function of power piston stroke with helium at 7.0 MPa, 600° C; 130-g regenerator; displacer 1; Escort points 189 to 199.

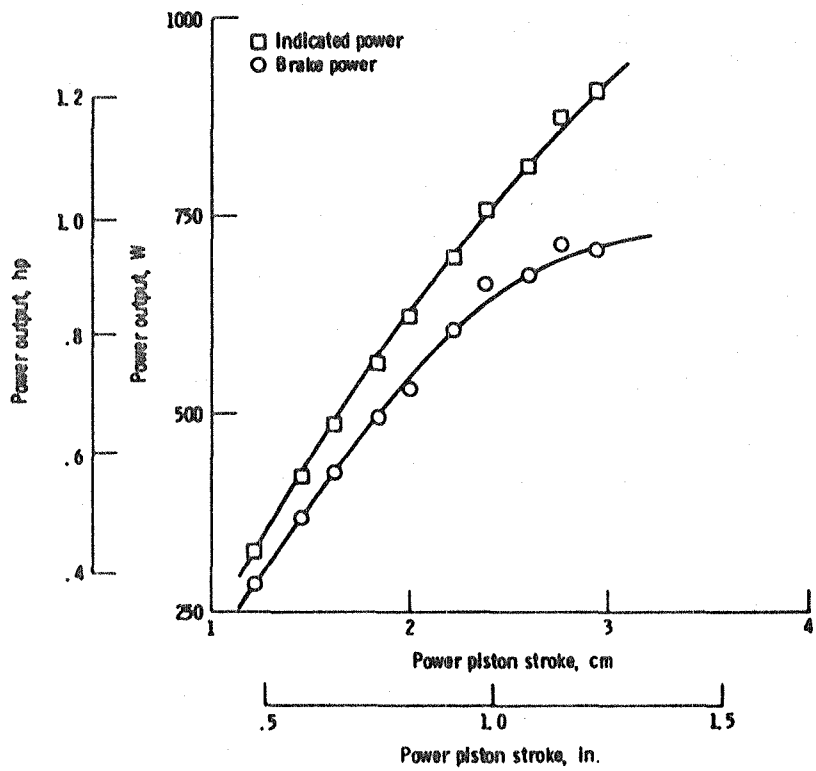

Figure 21. - Engine performance as a function of power piston stroke with helium at 7.0 MPa; 600° C; 139-g regenerator, displacer 2; Escort points 382 to 391.

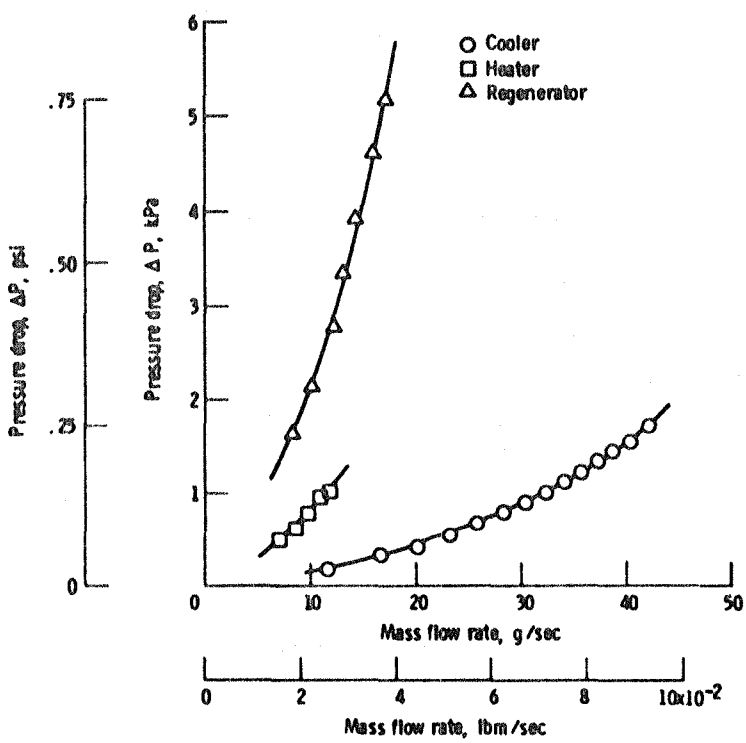

Figure 22. - Pressure drop as a function of mass flow rate for the RE-1000 with nitrogen at 2070 kPa inlet pressure for the cooler and regenerator, and 1380 kPa for the heater; 139-g regenerator.

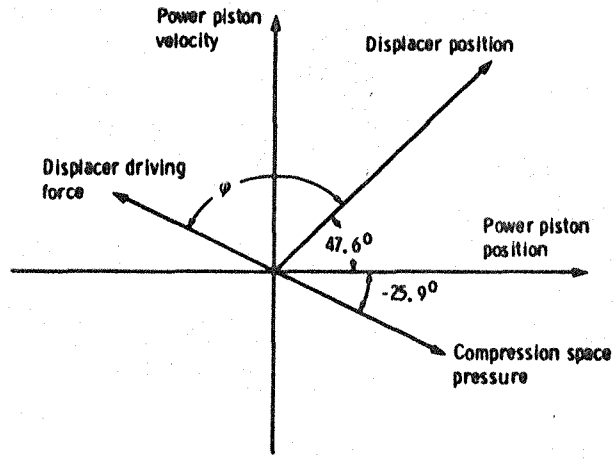

Figure 23. - Phasor diagram for RE-1000 data point taken at Sunpower, Inc., before delivery to Lewis.

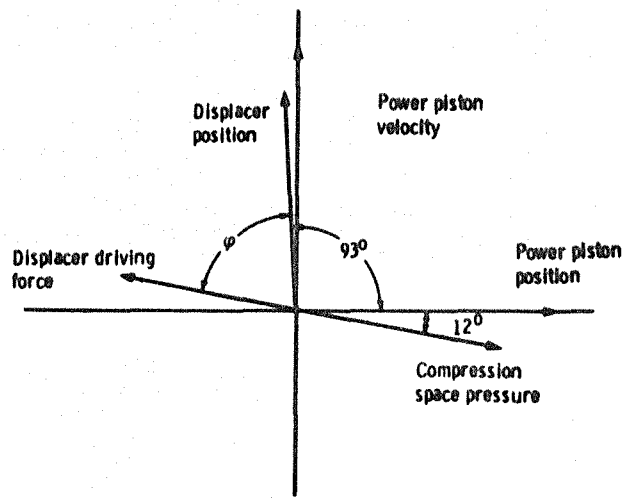

Figure 24. - Phasor diagram for RE-1000 with displacer 2 and 139-g regenerator.

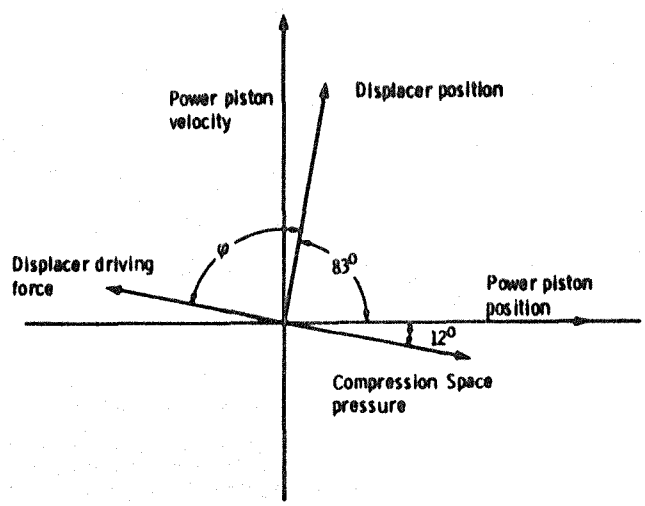

Figure 25. - Phasor diagram for RE-1000 with displacer 2 and 99-g regenerator.

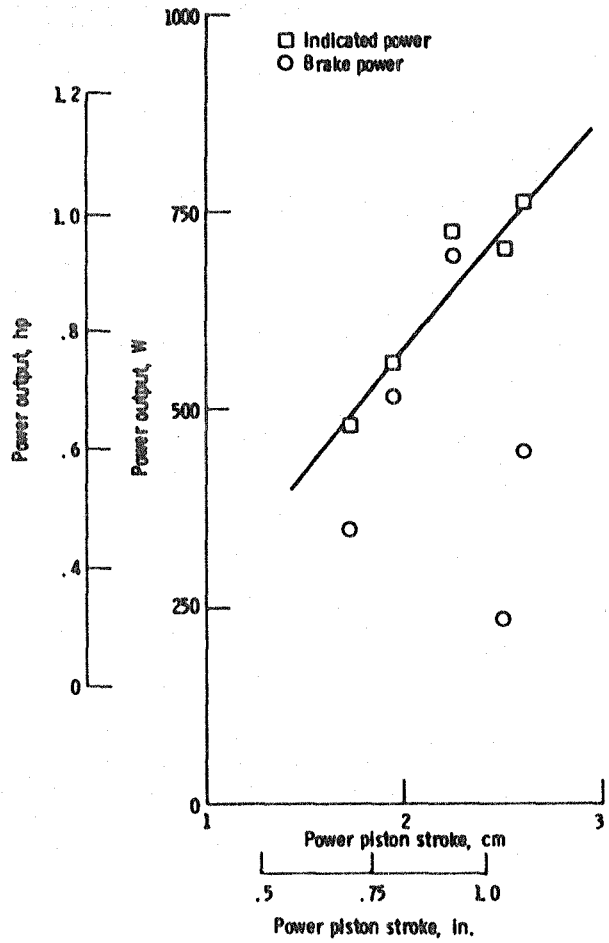

Figure 26. - Engine performance as a function of power piston stroke with helium at 20 MPa; 99-g regenerator; displacer 2; Escort points 407 to 412.

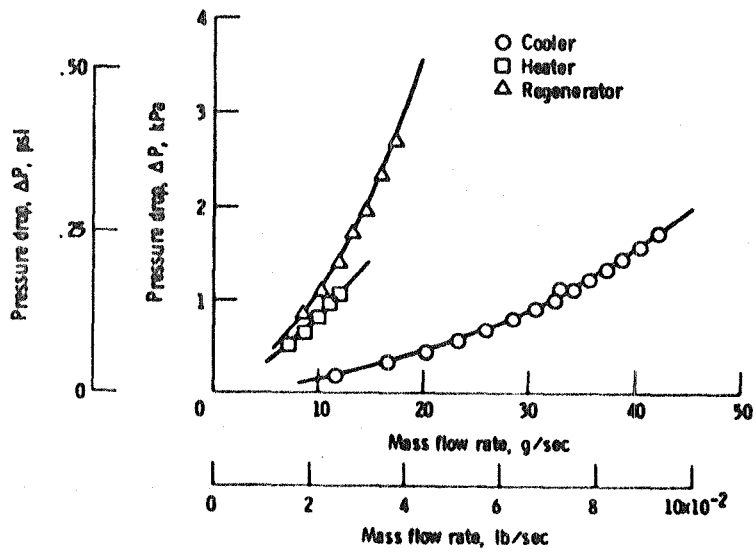

Figure 27. - Pressure drop as a function of mass flow rate for RE-1000 with nitrogen at 2070 kPa inlet pressure for the cooler and regenerator and 1380 kPa for the heater.

1. Report No.	2. Government Accession No.	3. Recipient's Catalog No.
NASA TM-82999		

4. Title and Subtitle	5. Report Date
Testing and Performance Characteristics of a 1-kW Free Piston Stirling Engine	April 1983
	6. Performing Organization Code 778-16-02
7. Author(s) Jeff Schreiber	8. Performing Organization Report No E-1435
9. Performing Organization Name and Address National Aeronautics and Space Administration Lewis Research Center Cleveland, Ohio 44135	10. Work Unit No. 11. Contract or Grant No.
12. Sponsoring Agency Name and Address National Aeronautics and Space Administration Washington, D. C. 20546	13. Type of Report and Period Covered Technical Memorandum 14. Sponsoring Agency Code

15. Supplementary Notes

16. Abstract

A 1-kW single-cylinder free piston Stirling engine, configured as a research engine, was tested with helium working gas. The engine features a posted displacer and dashpot load. The test results show the engine power output and efficiency to be lower than those observed during acceptance tests by the manufacturer. Engine tests results are presented for operation at the two heater head temperatures and with two regenerator porosities, along with flow test results for the heat exchangers.

17. Key Words (Suggested by Author(s))	18. Distribution Statement
Heat engine Stirling engine Stirling cycle Free piston Stirling	Unclassified - unlimited STAR Category 44

19. Security Classif. (of this report)	20. Security Classif. (of this page)	21. No. of Pages	22. Price*
Unclassified	Unclassified		

* For sale by the National Technical Information Service, Springfield, Virginia 22161

End of Document