NASA
Technical
Memorandum

NASA TM-82532

THE VARIABLE POLARITY PLASMA ARC WELDING PROCESS: ITS APPLICATION TO THE SPACE SHUTTLE EXTERNAL TANK – FIRST INTERIM REPORT

By A. C. Nunes, Jr., O. E. Bayless, Jr., C. S. Jones III,
P. M. Munafo, A. P. Biddle, and W. A. Wilson

Materials and Processes Laboratory

June 1983

(NASA-TM-82532) THE VARIABLE POLARITY PLASMA ARC WELDING PROCESS: ITS APPLICATION TO THE SPACE SHUTTLE EXTERNAL TANK Interim Report (NASA) 51 p HC A04/MF A01 CSCL 13H
N83-31021
Unclas
G3/37 28632

NASA
National Aeronautics and
Space Administration
George C. Marshall Space Flight Center

TECHNICAL REPORT STANDARD TITLE PAGE

1. REPORT NO. NASA TM -82532

2. GOVERNMENT ACCESSION NO.

3. RECIPIENT'S CATALOG NO.

4. TITLE AND SUBTITLE
The Variable Polarity Plasma Arc Welding Process: Its Application to the Space Shuttle External Tank – First Interim Report

5. REPORT DATE June 1983

6. PERFORMING ORGANIZATION CODE

7. AUTHOR(S) A. C. Nunes, Jr., E. O. Bayless, Jr., C. S. Jones III, P. M. Munafo, A. P. Biddle, and W. A. Wilson

8. PERFORMING ORGANIZATION REPORT #

9. PERFORMING ORGANIZATION NAME AND ADDRESS

George C. Marshall Space Flight Center
Marshall Space Flight Center, Alabama 35812

10. WORK UNIT NO.

11. CONTRACT OR GRANT NO.

12. SPONSORING AGENCY NAME AND ADDRESS

National Aeronautics and Space Administration
Washington, D.C. 20546

13. TYPE OF REPORT & PERIOD COVERED

Technical Memorandum

14. SPONSORING AGENCY CODE

15. SUPPLEMENTARY NOTES

Prepared by Materials and Processes Laboratory, Science and Engineering Directorate.

16. ABSTRACT

The Variable Polarity Plasma Arc (VPPA) welding process is being introduced as a partial replacement for the Gas Shielded Tungsten Arc process in assembly welding of the Space Shuttle External Tank. This report describes the technical history of the development of the VPPA process, interim results of the weld strength qualification studies, and plans for further work on the implementation of the VPPA process.

17. KEY WORDS

18. DISTRIBUTION STATEMENT

Unclassified – Unlimited

19. SECURITY CLASSIF. (of this report) Unclassified

20. SECURITY CLASSIF. (of this page) Unclassified

21. NO. OF PAGES 50

22. PRICE NTIS

MSFC - Form 3292 (May 1969)

For sale by National Technical Information Service, Springfield, Virginia 22151

ACKNOWLEDGMENTS

Many people had significant roles in the development of Variable Polarity Plasma Arc Welding for application to the Space Shuttle External Tank.

Personnel in the Advanced Manufacturing Technology Laboratory, Materials Engineering, and Fabrication and Tank Production of Martin Marietta Corporation's Michoud Assembly Facility in New Orleans, Louisiana, who contributed significantly to the effort were D. Bolstad, C. Brosemer, F. Clover, W. Collins, D. Hartley, J. DeGeneres, T. Hibbard, R. Johnson, L. Johnston, W. McFarlane, W. McGee, S. Motoux, J. Ratcliffe, G. Scott, J. Sexton, C. Thornburg, D. Van Dyke, and all those who supported their efforts.

Personnel in the Metals Processes and Metallurgy Research Branches at Marshall Space Flight Center, Huntsville, Alabama, who contributed significantly to the effort were S. Clark, C. Corum (retired), T. Craig, G. DeRamus, Jr., J. Hodo, C. Lovoy (retired), N. Tiller, and all those who supported their efforts.

In the course of so extensive an effort it is possible that a deserving contributor's name may have been overlooked. The acknowledgment listings must therefore not be taken as exclusive. To all contributors the authors offer their thanks.

TABLE OF CONTENTS

LIST OF ILLUSTRATIONS

LIST OF TABLES

TECHNICAL MEMORANDUM

THE VARIABLE POLARITY PLASMA ARC WELDING PROCESS: ITS APPLICATION TO THE SPACE SHUTTLE EXTERNAL TANK – FIRST INTERIM REPORT

INTRODUCTION: THE VARIABLE POLARITY PLASMA ARC WELDING PROCESS

This report documents the development of a variable polarity plasma arc (VPPA) welding system and its application to the fabrication of the Space Shuttle external tank (ET) as carried out at NASA's Marshall Space Flight Center and at Martin Marietta Corporation's Michoud Facility.

Theory of the Plasma Arc

The plasma arc is characterized by a jet which projects the hot plasma forcefully against the work piece. Unconstricted arcs used in gas shielded tungsten arc welding (GTAW) processes also exhibit jetting [1] caused by magnetic pumping of the arc plasma. In an unconstricted arc the current density $\vec{J}$ flowing down the arc interacts with the magnetic induction $\vec{B}$ set up around the current flow to produce an inward directed force $\vec{J} \times \vec{B}$ per unit volume of arc material.

For an unconstricted arc column of radius r_a with a uniformly distributed current I ($J = I/\pi r_a^2$) a pressure P varying with the radius r according to the relation

$$P = \frac{\mu}{4\pi} IJ \left(1 - \frac{r^2}{r_a^2}\right) \quad , \tag{1}$$

is computed where μ is the magnetic permeability of the gases entering the arc. Assuming a permeability about the same as that for free space ($\mu/4\pi \approx 10^{-2}$ dynes/amp^2), the maximum pressure p_{max} (at $r = 0$) in psi is given by

$$p_{max} = 7.16 \times 10^{-9} \frac{I^2}{r_a^2} \quad , \tag{2}$$

where I and r_a are given in amperes and inches respectively. The maximum pressure computed for a quarter inch diameter ($r_a = 1/8$ in.), 300 amp arc is 0.04 psi.

As the arc expands away from the electrode spot, r_a increases and p_{max} drops. Assuming a conversion of pressure to velocity in accord with Bernoulli's equation, the maximum arc velocity V_{max} may be estimated from the relation

$$\frac{\rho V_{max}^2}{2} = P_{max} \quad , \tag{3}$$

where ρ is the density of the hot arc plasma gas. Although P_{max} is small, so is the density of the hot gas, and velocities on the order of 100 m/sec are predicted from equation (2). 0.04 psi is equivalent to about an inch of water pressure.

The plasma arc jet as shown in Figure 1 incorporates a nozzle which prevents sidewards flow of the arc gases. Thus, when the plasma gas enters the arc plasma at the rear of the nozzle the temperature shoots up and the density drops precipitously. Conservation of matter requires that the exit velocity be high enough to compensate for the reduced density of the gas at the nozzle exit; i.e., ρAV is constant along the nozzle duct, where ρ is the gas density, A is the duct area, and V is the gas velocity. Conservation of momentum for a frictionless, constant area duct requires that $P + \rho V^2$, where P, ρ, and V are respectively the local pressure, density, and velocity of the duct gas, is constant along the duct. Approximating the plasma nozzle by a frictionless, constant area duct, where the plasma gas supply pressure is ΔP and where the inlet velocity may be neglected with respect to the exit jet velocity V_j, then

$$\rho V_j^2 = \Delta P \quad . \tag{4}$$

A plasma gas supply pressure of perhaps 25 in. of water would not be unreasonable for the VPPA equipment discussed herein. Plasma arc jet velocities are calculated on the order of 400 m/sec or about four times greater than the maximum velocities expected for the GTAW process. These velocities fall within appropriate ranges cited by Metcalfe and Quigley [2]: 80 to 150 m/sec for GTAW and 300 to 2000 m/sec for plasma arc welding (PAW).

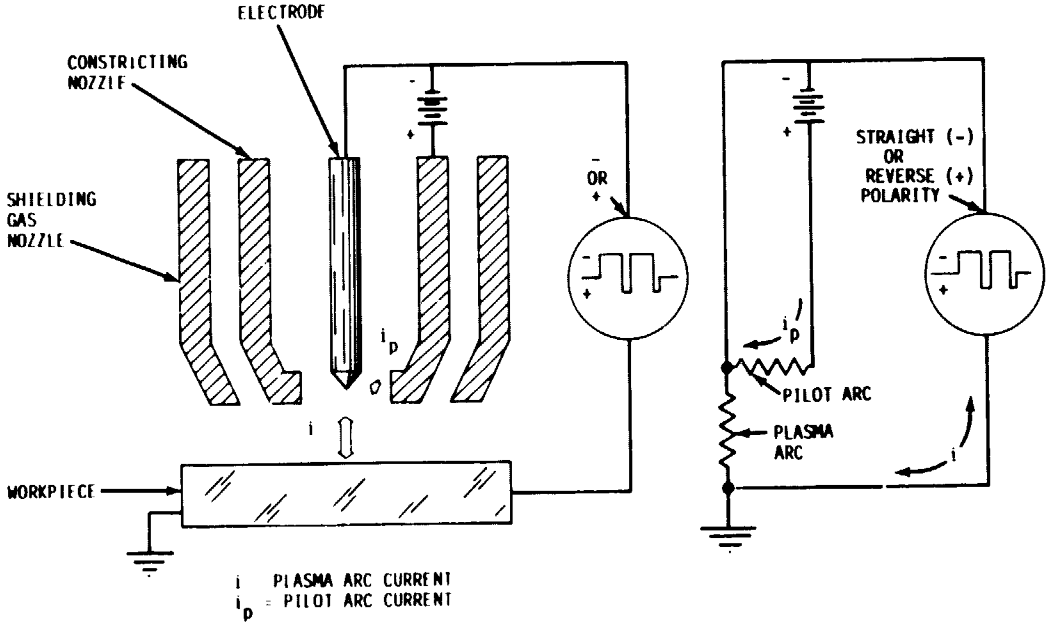

Figure 1. Current flow in the VPPA torch. Pilot arc voltage and current are approximately 20 V and 20 to 30 A, respectively (0.4 to 0.6 kW).

Bernoulli's equation estimates stagnation pressures of less than 1 in. of water for the GTAW process example given here and about 12 in. of water for the PAW example. These pressures are equivalent to 0.4 and 4 in. of molten aluminum. Ignoring surface tension and evaporation reaction effects, the GTAW arc should not be able to depress the surface of a weld puddle more than 0.4 in., while the plasma arc jet might depress the surface up to 4 in. deep. In fact, although the velocity fields in the

GTAW arc can be somewhat enhanced [3], the penetration is not necessarily correspondingly enhanced [4]. Neither are significant surface depressions generally seen in aluminum weld puddles under the GTAW torch. On the other hand, PAW often operates in the "keyholing" mode, where the plasma penetrates the entire workpiece; the hole through the workpiece opens in front of the plasma jet and seals up behind it to leave a deep, relatively narrow weld bead. Therein lies one principal advantage of the PAW process: its capacity for doing in a single pass what would require multiple GTAW passes. When operated at still higher pressures, e.g., in the neighborhood of 200 in. of water, a flushing away of the liquid accompanies a powerful cutting action.

An open keyhole allows escape of gaseous contaminants. Relative to GTAW, shorter paths for escape of such contaminants through thinner layers of molten metal lining the keyhole may also be significant. The plasma jet has been observed to blow out solid contaminants upon some occasions. The greater tolerance for contamination exhibited by the VPPA process eliminates the need for the scraping procedure and for white glove handling of the aluminum required by the GTAW process. The greater tolerance for contamination is not unlimited, however, and gross contamination would be expected to cause a defect, even for a VPPA weld.

The keyhole mode of welding also appears to be associated with reduced peaking distortion even when the geometry is about the same as the multipass GTAW standard for comparison. This is to be expected from the more symmetrical solidification pattern undergone by the PAW keyhole pass.

Origin and Advantages of Plasma Arc Welding

The plasma torch was introduced by Linde Air Products in 1955 as a cutting, not a welding device [5].

By 1965 Linde had set up an automatic plasma arc welding facility for Westinghouse Electric Corp. Westinghouse used the facility to fabricate 120-in. diameter, 3/8-in. thick D6AC steel rocket cases for the Titan III-C booster assembly [6,7]. The PAW process halved the weld time while retaining properties equivalent to those obtained by the GTAW process. The economy in weld time was effected by replacing the root pass plus three or four fill passes required for GTAW by a root pass plus a single cover pass. In 1965 Thermal Dynamics Corp. also reported the use of reversed polarity PAW to join 1/4-in. thick aluminum plate [8].

Advantages of Straight, Reverse, and Variable Polarity

The significant current carriers in a welding arc are electrons and positive ions. Electrons carry the bulk of the current, moving rapidly from negative cathode to positive anode. The positive ions drift more slowly through the interelectrode space. The differential drift rate results in an unsymmetrical heating at the ends of the welding arc in a fixed polarity arrangement. The cathode receives less heat and the anode more heat. The "straight polarity" mode of operation entails a negative electrode (cathode) and a positive workpiece (anode). Where the primary object of the weld process is to deliver the maximum heat to the workpiece with minimal deterioration of the electrode, straight polarity is used.

"Reverse polarity," i.e., positive electrode and negative workpiece, has the advantage that the workpiece is subjected to a cleaning process, "cathodic cleaning," by the impingement of heavy (compared to electrons) positive ions on the workpiece surface. In the case of PAW reverse polarity action appears to condition the surface of the aluminum alloy so that the molten metal flows easily and controllably under the arc. It is conjectured that this fluid control is accomplished through breaking up of surface oxide films. Cutoff of reverse polarity during VPPA welding transforms a weld metal flow which closes smoothly and soundly behind the Keyhole to an irregular, intermittent, globular flow leaving a rough, lumpy bead pushed down below the parent metal surface and protruding jaggedly from the root of the weld. But continuous reverse polarity is not necessary to provide adequate cathodic cleaning action.

Alternating current GTAW has been recommended for welding aluminum alloys since the late 1940's [9]. Studies of desirable GTAW current waveforms were underway by the end of the 1950's. A 1967 account of Sciaky Brothers' 300 A model SW-3 GTAW power supply [10] describes a variable polarity square-wave output. A 10 cycle (167 msec) straight polarity square pulse followed by a one or two cycle (17 or 33 msec) reverse polarity square pulse at a current setting determined by heat requirements was considered optimal. The variable polarity square-wave with unequal straight and reverse polarity times offered a combination of the high heating capability of straight polarity with the cleaning feature of reverse polarity. Adequate cleaning is obtained by incorporating a relatively short (one tenth to one fifth the duration of the straight polarity current) pulse of reverse polarity current into the welding current waveform.

Origin of Variable Polarity Plasma Arc Welding

By the end of the 1960's B. VanCleave at Boeing Co. was beginning his efforts to combine the variable polarity feature with Keyholing plasma arc welding for joining aluminum [11,12]. The power supply proved to be a critical item. The first attempts with a pulsed power supply failed because the machine did not supply adequate plasma voltage. In 1972 a Sciaky square-wave generator demonstrated the value of the concept without being able to produce the desired welds. In 1974 Hobart Brothers built, under contract to Boeing, a VPPA power supply that was to prove satisfactory. The currently used Hobart cycle, 19 msec straight polarity followed by 4 msec reverse polarity, keeps about the same straight time to reverse time ratio, but the cycle time is speeded up by an order of magnitude over that of the Sciaky machine. The machine was delivered in 1975. The period from 1975 to 1979, when VPPA welding was incorporated into the Army Roland Missile Production Program, was one of development and elimination of processing problems, such as a pressure pulsation, for example, that blew out the weld puddle.

Origin of the Variable Polarity Plasma Arc Welding Program at Marshall Space Flight Center

In view of Boeing's promising work, in 1978 the decision was made to acquire VPPA equipment at Marshall Space Flight Center for evaluation as a potential improvement on the GTA welding system then in use to fabricate the aluminum external tank (ET) of the Space Shuttle.

MSFC's first VPPA system was received in January 1979. It centered around a Hobart 400 A plasma torch, mounted on a Progressive Welder and Machine Co. (Pontiac, Michigan) manipulator. Power was supplied by a Hobart Alternate Polarity Cyber-Tig II power supply with an 800 High Pulse Series Programmer. Coolant and torch gas flow were controlled by an HPW-400 Plasma Control Console. Torch to work distance was controlled manually.

After a 6-month study it was concluded that:

1) VPPA welds in aluminum were essentially porosity free as noted by radiography. This characteristic would reduce weld repair costs appreciably with respect to GTA welds.

2) The cleaning of faying surfaces by scraping and the draw filing of adjacent surfaces of the joint as required for straight polarity GTA welding could be eliminated. This would reduce joint preparation costs appreciably with respect to GTA welds.

3) A significant reduction in peaking was noticed. This would reduce depeaking costs. Depeaking, usually by magnetic hammer, is required on GTA welds where peaking, measured as the dihedral angle across the weld, exceeds 6.5 deg.

These conclusions were so encouraging that the decision was made to develop a production VPPA system to partially replace the GTAW system now in use to fabricate the Space Shuttle ET, with its 36,000 in. of welds over thicknesses ranging from 0.140 to 1.040 in.

MODIFICATIONS AND DEVELOPMENT OF THE EQUIPMENT

Computer Controls

GTAW equipment used to join ET panels incorporates a computer control to manipulate all the welding parameters that have to be varied while making a tapered weld [13]. Because the wall thickness of the tank shells varies (e.g., the liquid oxygen tank nose section varies in thickness from 0.367 in. to 0.140 in.) tapered longitudinal welds are frequently encountered. A computer to control welding parameters would be required for VPPA welding for the same reason; i.e., tapered welds require too high a level of skill and attention to be practical as manual welds in a production environment.

Therefore, in October 1979 a request for proposal to modify the then existing VPPA system by the addition of a digital program controller was issued and in March 1980 Hobart Brothers, Inc., entered into a contract to carry out the task. In December 1980 a computer controlled VPPA system was delivered to Marshall Space Flight Center. A second computerized VPPA welding system was delivered to the ET fabrication plant of Martin-Marietta at Michoud, Louisiana, in March 1981.

Schematics and photographs of the MSFC VPPA welding system are shown in Figures 2 through 6. The heart of the computerized VPPA welding system is the PAL-100 computer, operating with a Digital Equipment Corp. (DEC) LSI-11/23 microprocessor. The PAL-100 computer sets weld parameters in accordance with set point inputs by the welder operator. The computer can vary the parameters to produce tapered welds. A recent modification of the system closing the control loop on the weld parameters now permits the system to continuously force measured parameters to coincide with desired set points. This has decreased the sensitivity of the system to variations in calibration.

The operator of the weld controller inputs a series of choices offered by a menu format software system communicating through a Keyboard-color CRT display. Hard copy can be obtained from an attached printer. Dual floppy disc memory storage is available in addition to the internal 32K memory. The welding system can be operated in the fully manual mode without the computer. Partial override control of the system by the operator through a remote pendant may also be selected. The control system was set up by General Digital Industries, Inc., of Huntsville, Alabama, in the capacity of subcontractor to Hobart Brothers, Inc. The generic name, Process Automation Language, or PAL, of the PAL-100 computer is applied by GDI to their line of process automation and control computers.

The entire VPPA system including the manipulator and cold wire feeder as well as the torch control and power supply, is subject to computer control. Digital displays are used throughout the system. Controls and displays are accurate within ±1 percent.

Initial experience with this system has been good. The system has functioned according to design and has been convenient to use. One of the floppy discs has been dedicated as a system memory, the other for weld programs. Thus far about a dozen weld programs have been recorded; there is no limit to the size of the weld program library which might be recorded. At the time of this writing, it is planned to increase memory capacity through replacement of the floppy disc memory with a hard disc memory.

ORIGINAL PAGE IS
OF POOR QUALITY

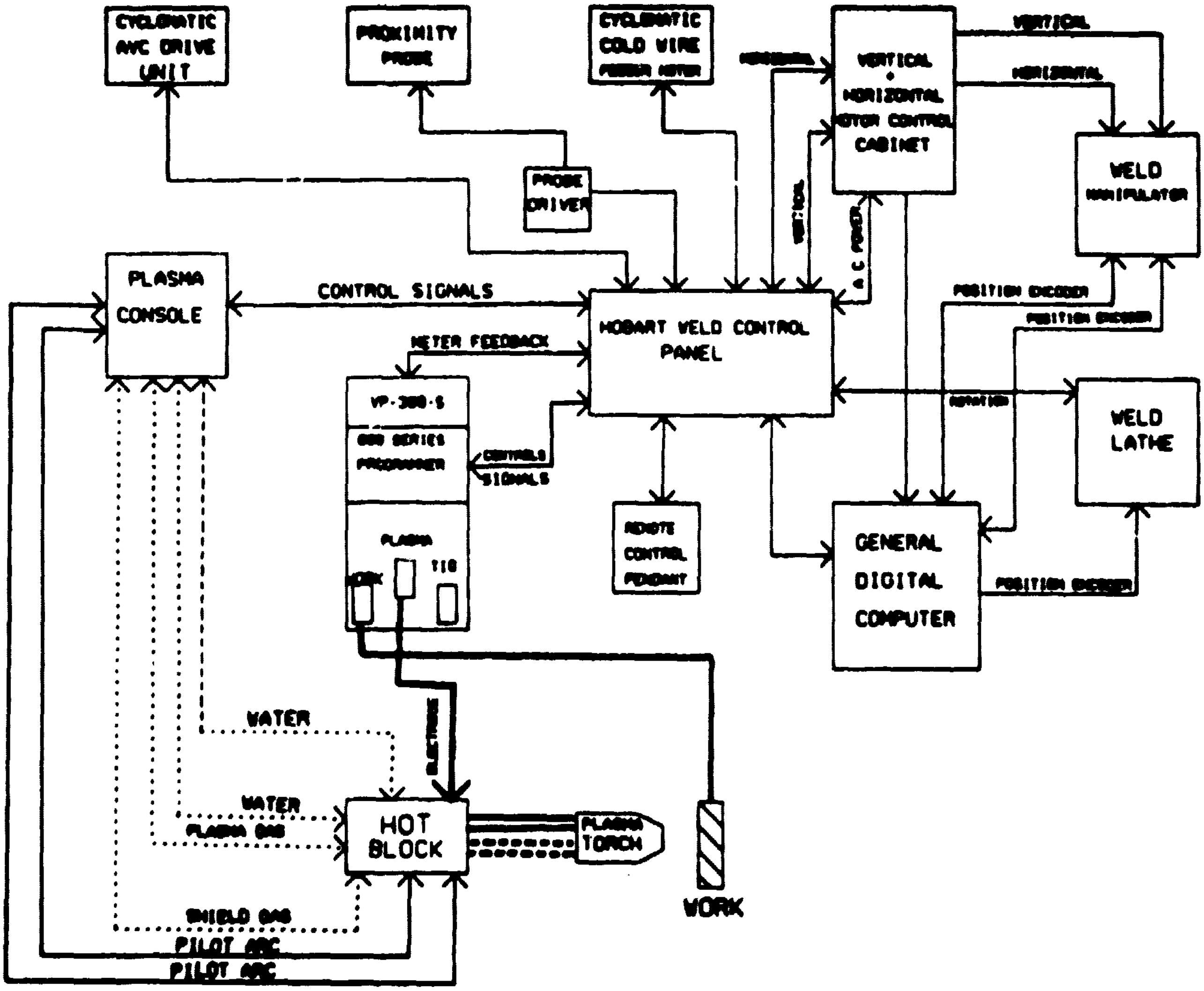

Figure 2. The MSFC VPPA welding system – schematic diagram.

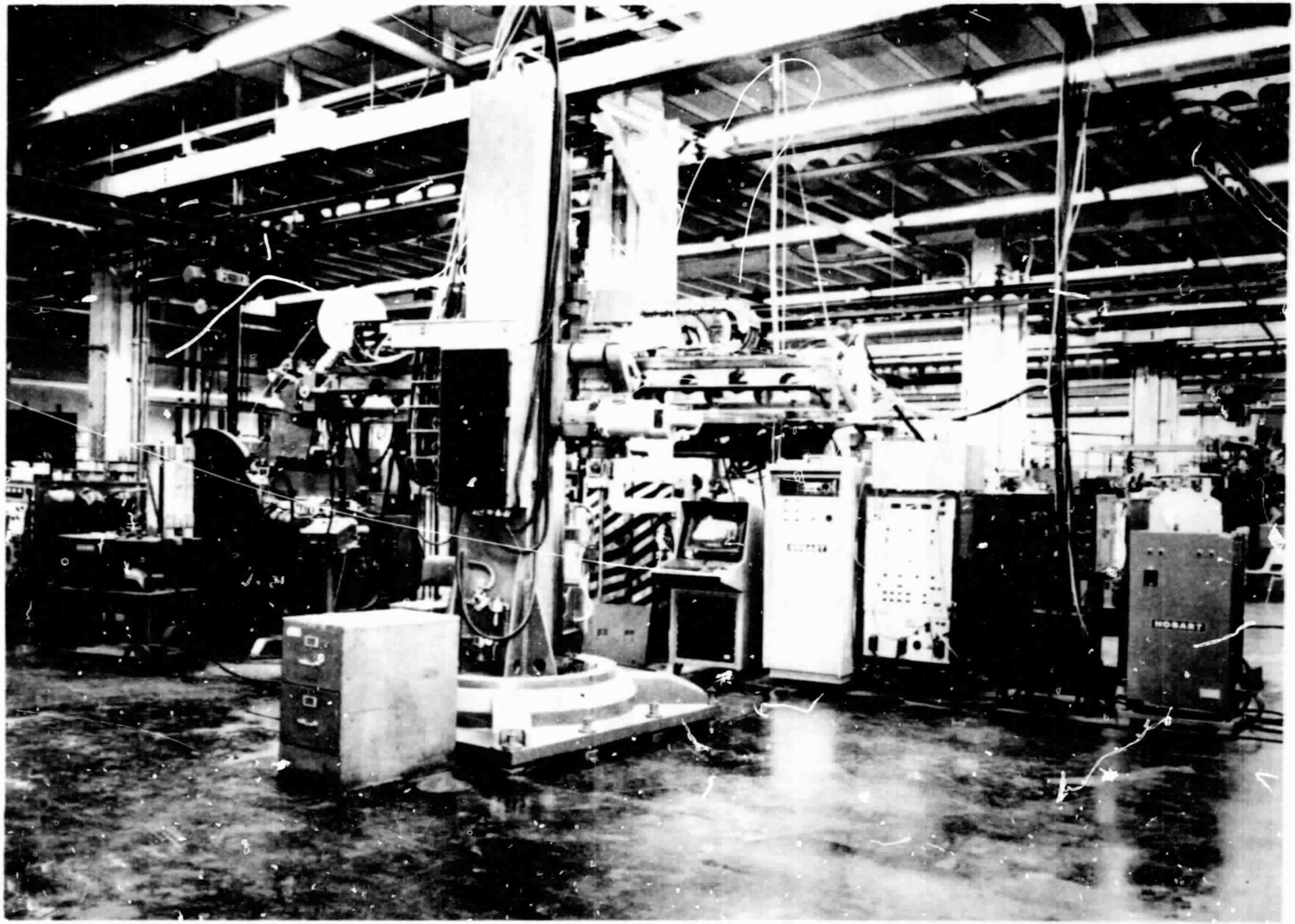

Figure 3. The MSFC VPPA welding system – general view.

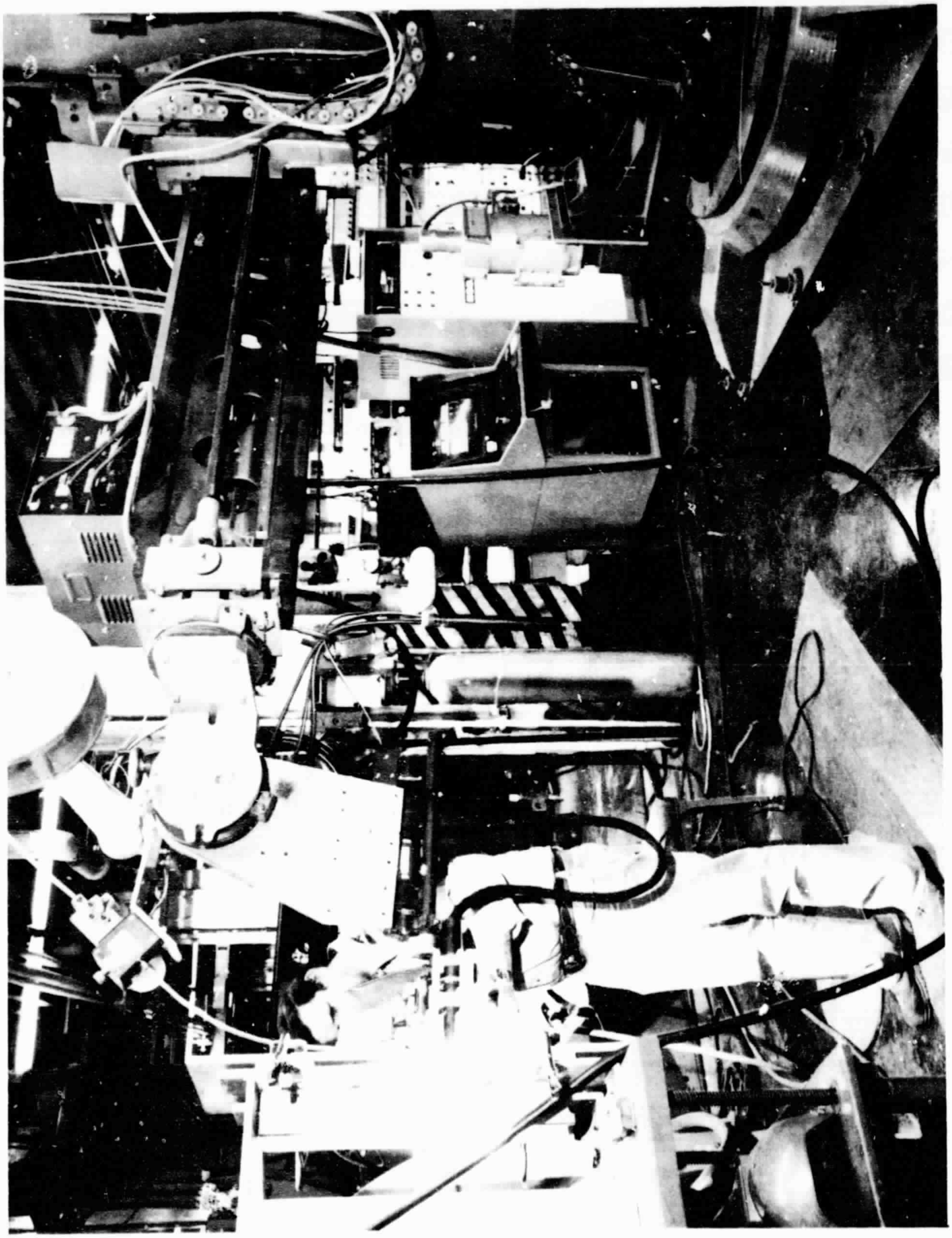

Figure 4. The MSFC VPPA welding system – torch, cold wire, feeder, and hot block mounted on the manipulator beam.

ORIGINAL PAGE IS
OF POOR QUALITY

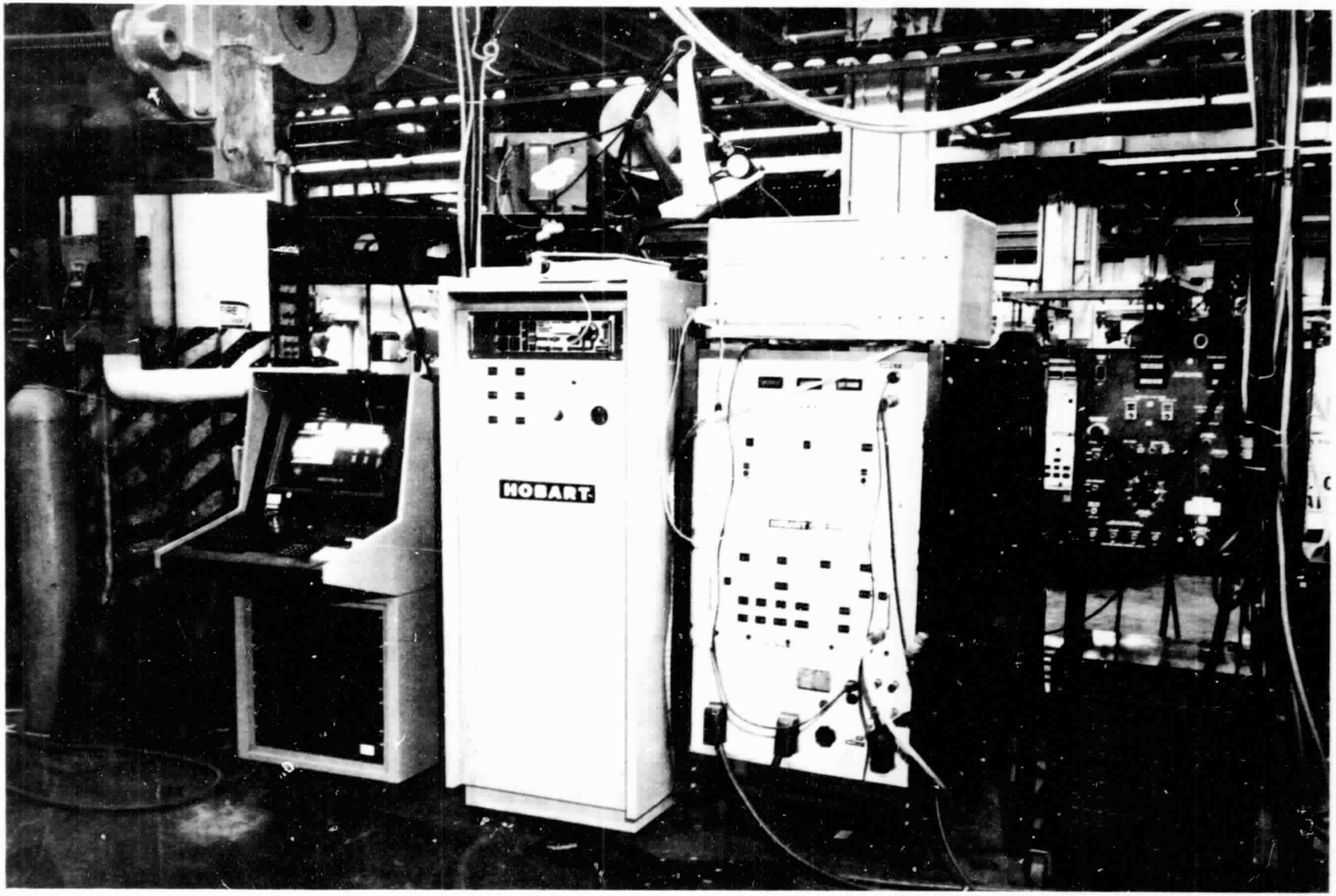

Figure 5. The MSFC VPPA welding system – computer, weld control panel, power supply and programmer, and plasma control cabinet with nozzle coolant radiator below.

ORIGINAL PAGE IS
OF POOR QUALITY

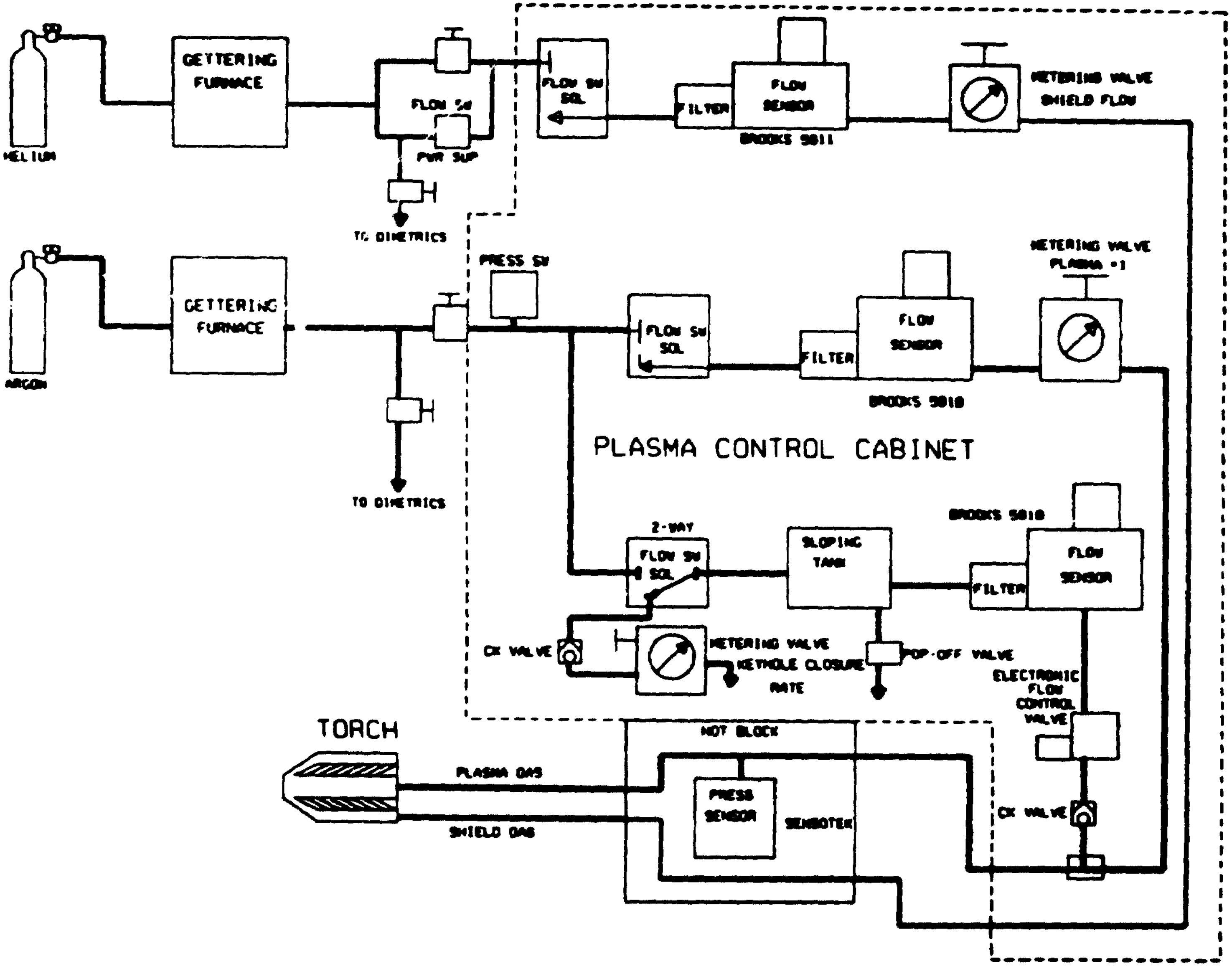

Figure 6. The MSFC VPPA welding system – gas flow schematic diagram.

Power Supply and Automatic Voltage Control

Power supply to the VPPA torch is provided by the Hobart VP-300-S Variable Polarity Welding Machine. A simplified schematic of the machine is shown in Figure 7. The machine can deliver:

- 3 to 299 A straight polarity
- 3 to 398 A reverse polarity (using the above plus a 5 to 99 A supplementary power supply)
- An alternate (variable) polarity waveform incorporating 5 to 99.9 msec intervals of straight polarity current alternating with 1 to 99.9 msec intervals of reverse polarity.

The current magnitude is controlled by the Cyber-Tig II Series 800 Programmer. An Alternate Polarity Programmer incorporated into the VP-300-S Welding Machine controls the straight and reverse polarity interval lengths. Switching is carried out by SCR's. A typical VPPA waveform is shown in Figure 8. The machine runs on 3-phase 480 V power. Some 3-phase ripple can be seen superimposed on the current waveform.

The pilot arc current, superimposed upon the main arc current between the electrode and the plasma nozzle, is supplied by a separate power supply located in the plasma control console. The pilot arc polarity does not alternate. The nozzle is held positive with respect to the electrode so that the electron flow is always away from the electrode toward the nozzle. The pilot arc power supply inputs 480 Vac current and outputs 4 to 40 A current at a working voltage in the neighborhood of 20 V. The open circuit voltage rises to 100 V. The main arc is started by application of a high frequency alternating voltage between the electrode and the plasma nozzle so as to first establish the pilot arc from which the main arc proceeds. The high frequency current is controlled by the plasma control console, but is generated by a spark gap oscillator located in the hot block. It has been observed that once the main arc is started it is possible to turn off the pilot arc with little or no effect, at least in some situations.

Arc Voltage Control (AVC) circuitry located in the weld control cabinet can be used at the option of the welder operator to hold the arc voltage constant by moving the torch towards and away from the workpiece as required. The AVC takes advantage of the relation between arc length and arc voltage. The purpose of AVC is to prevent weld power variations. Weld power is given by the product of amps, already held constant by the power supply, and volts, held constant by the AVC. Variations in power produce variations in weld consistency.

Although for VPPA operation the AVC senses the voltage behind the inverter in the power supply so that the sensed polarity does not change, the changes in voltage magnitude under VPPA conditions were found to cause undesirable weld head motions which left behind a roughened weld surface. This problem was remedied by a cooperative effort between Hobart Brothers, Inc., the Michoud Assembly Facility of Martin Marietta Corp., and MSFC. A circuit was incorporated into the AVC system causing it to ignore the voltage fluctuations produced during the reverse polarity part of the waveform and thus to control the torch from the straight polarity voltage only.

With the latter modification the AVC is now operating satisfactorily both in the Keyhole and non-Keyhole modes.

ORIGINAL PAGE IS
OF POOR QUALITY

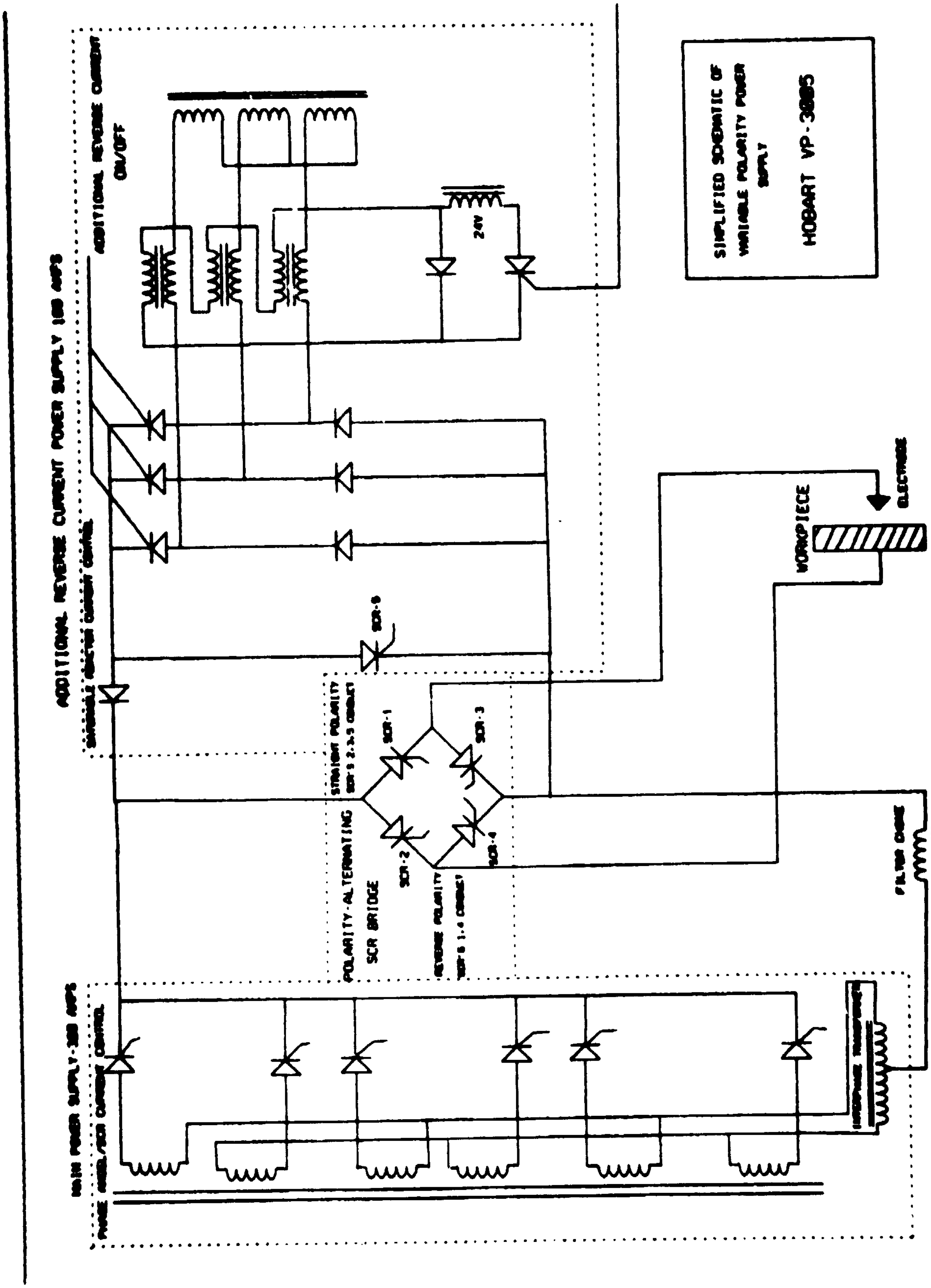

Figure 7. Simplified schematic of Hobart VP-300-S VPPA Power Supply.

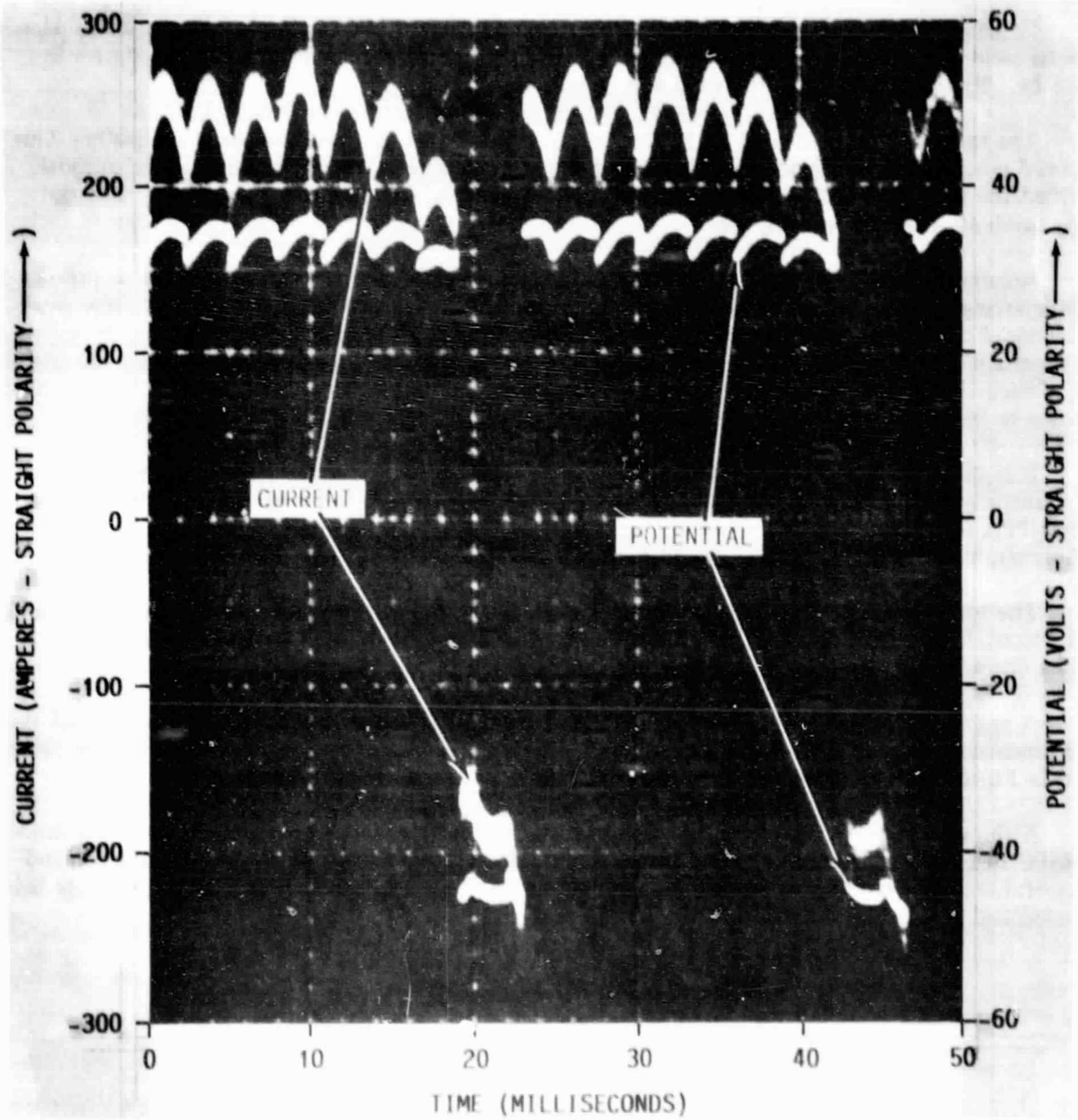

Figure 8. A typical VPPA waveform. Nominal straight polarity settings are 225 A and 30.0 V. The cycle is divided into 16 msec straight polarity and 4 msec reverse polarity.

The VPPA Torch

An assembly drawing of the VPPA welding torch is shown in Figure 9 and a photograph of the disassembled parts in Figure 10. The electrode is held in a collet assembly. The coolant passages are sealed by O-rings at part seam interfaces.

Coolant leakage into the gas passages is detrimental even at low levels. In the arc, water decomposes to yield oxygen and hydrogen. Oxygen will form a visible film on the electrode as shown in Figure 11. Hydrogen will enter the weld and cause porosity.

The torch initially provided by Hobart leaked coolant into the gas passages occasionally. This happened when electrode alignment by means of the three setscrews, then provided for the purpose, disturbed the seating of the O-rings sealing the coolant passages, or when the O-rings were damaged during torch assembly or welding use.

Alignment of the electrode is critical. Even if the electrode is well enough aligned to prevent "double arcing," where the main arc proceeds from electrode to nozzle and from thence to the workpiece instead of directly from electrode to workpiece causing the nozzle to melt, it is difficult to prevent a certain amount of assymetry in the arc. With use, the tungsten electrode tip may pick up small balls of melted tungsten, which also causes an asymmetrical arc. An example of tungsten ball pickup is shown in Figure 11 and (enlarged) Figure 12.

It is preferred to have the widest part of an asymmetrical arc extended along the weld rather than transverse to it. Therefore at MSFC a rotating torch mount was installed, which permitted rotation of the VPPA torch about its axis so as to align arc pattern asymmetries and thus optimize weld quality. A photograph of the torch rotating mount is shown in Figure 13.

The torch orifice geometry is extremely critical for torch performance. Unless gas orifice dimensions, electrode to orifice spacing, and orifice cup to shield cup dimensions are fixed precisely, torch welding characteristics will not be consistent.

A special set of tools was developed at MSFC to make it easier for the operator to control the latter dimensions as well as to insert and remove O-rings during torch assembly. These tools are illustrated in Figure 14. A description of the use of tools is not included in this report.

Although the torch described has performed well, a further development effort has been funded by MSFC to build a hermetically sealed torch with a self-centering electrode that would not demand the careful and time-consuming procedures required to assemble the present torch. It is presently being evaluated and will be described in a subsequent report.

MODIFICATIONS AND DEVELOPMENT OF THE PROCESS

Effect of Weld Parameters on Weld Strength

In order to assess the effect of the VPPA welding process in comparison with the GTA welding process closely similar VPPA and GTA butt welds were made in 3/8-in. thick 2219-T87 aluminum plate.

Both welds were vertical, single-pass welds. Surface preparation necessarily differed to accommodate the GTA process. The square butt edges were left as machined for the VPPA process, but were scraped for the GTAW process. In both cases the surfaces were wiped with solvent to remove grease before welding.

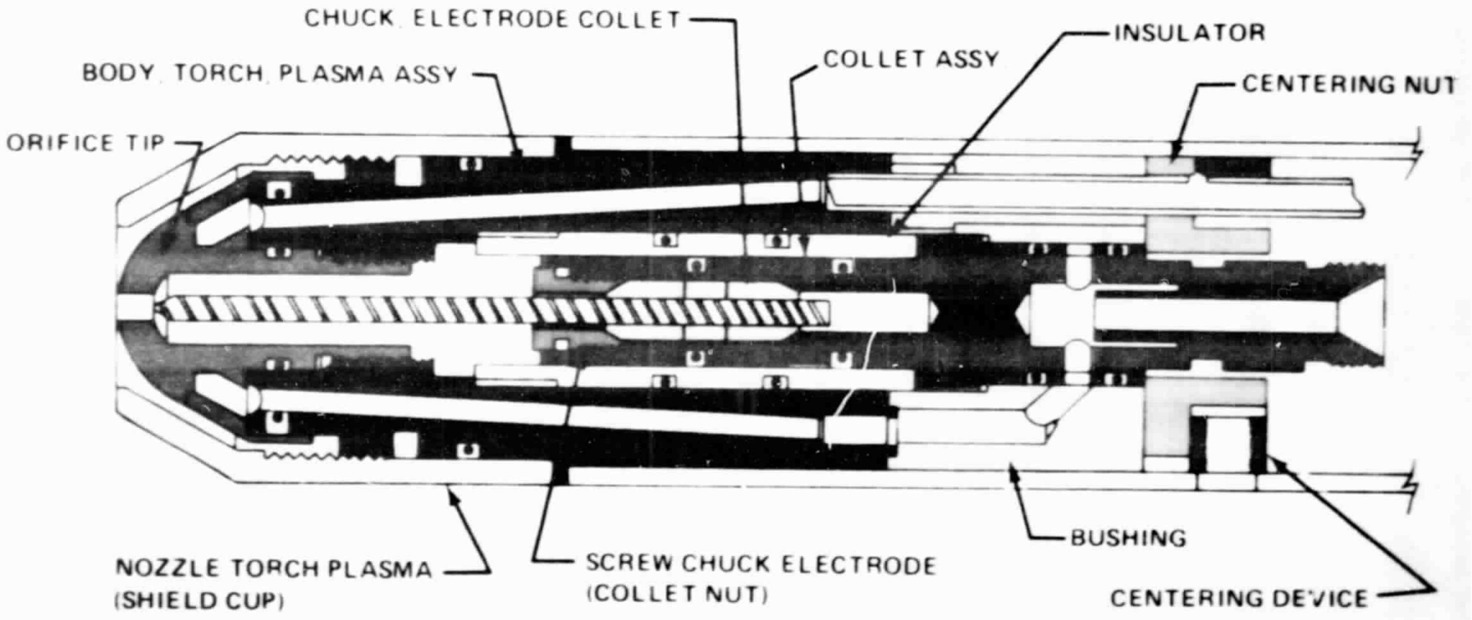

Figure 9. VPPA welding torch assembly.

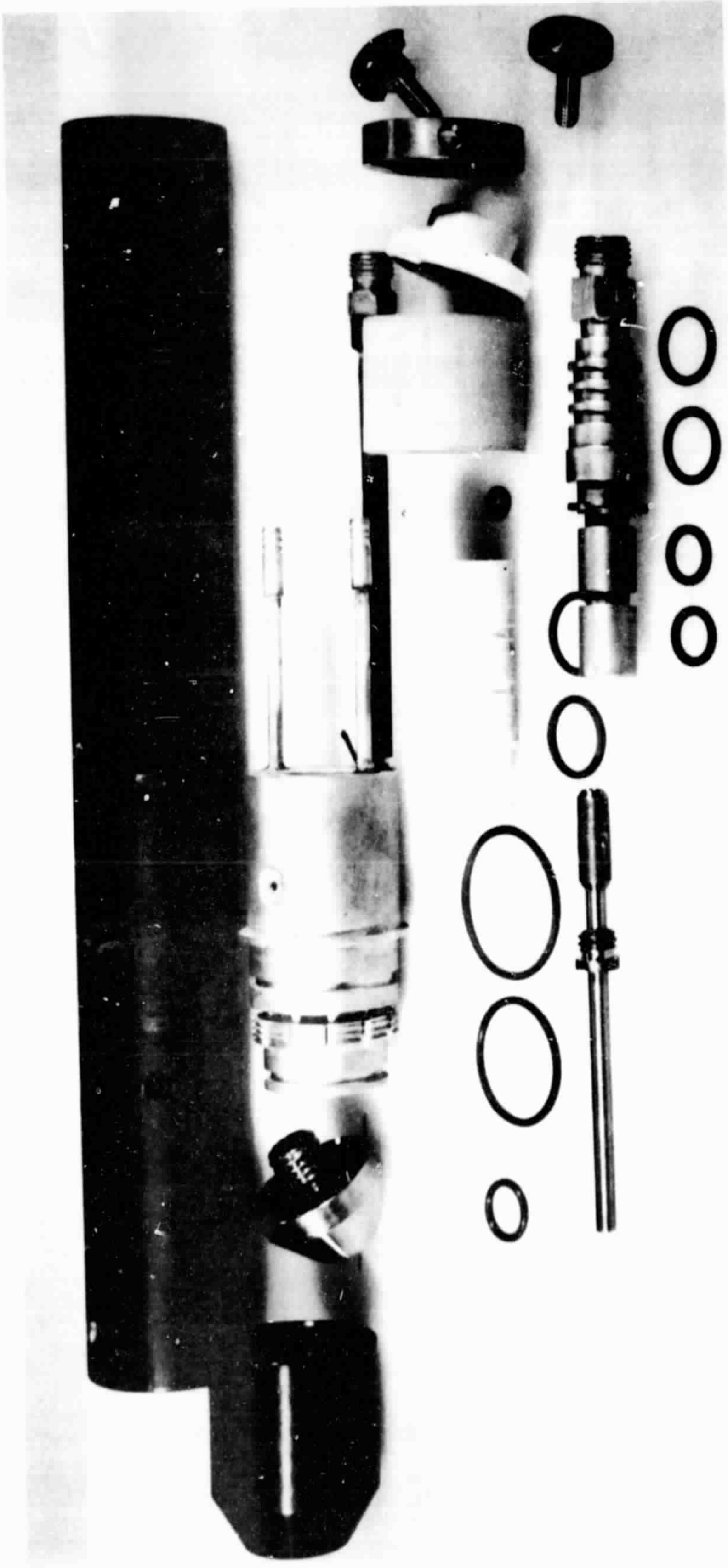

Figure 10. VPPA welding torch – view of disassembled torch parts.

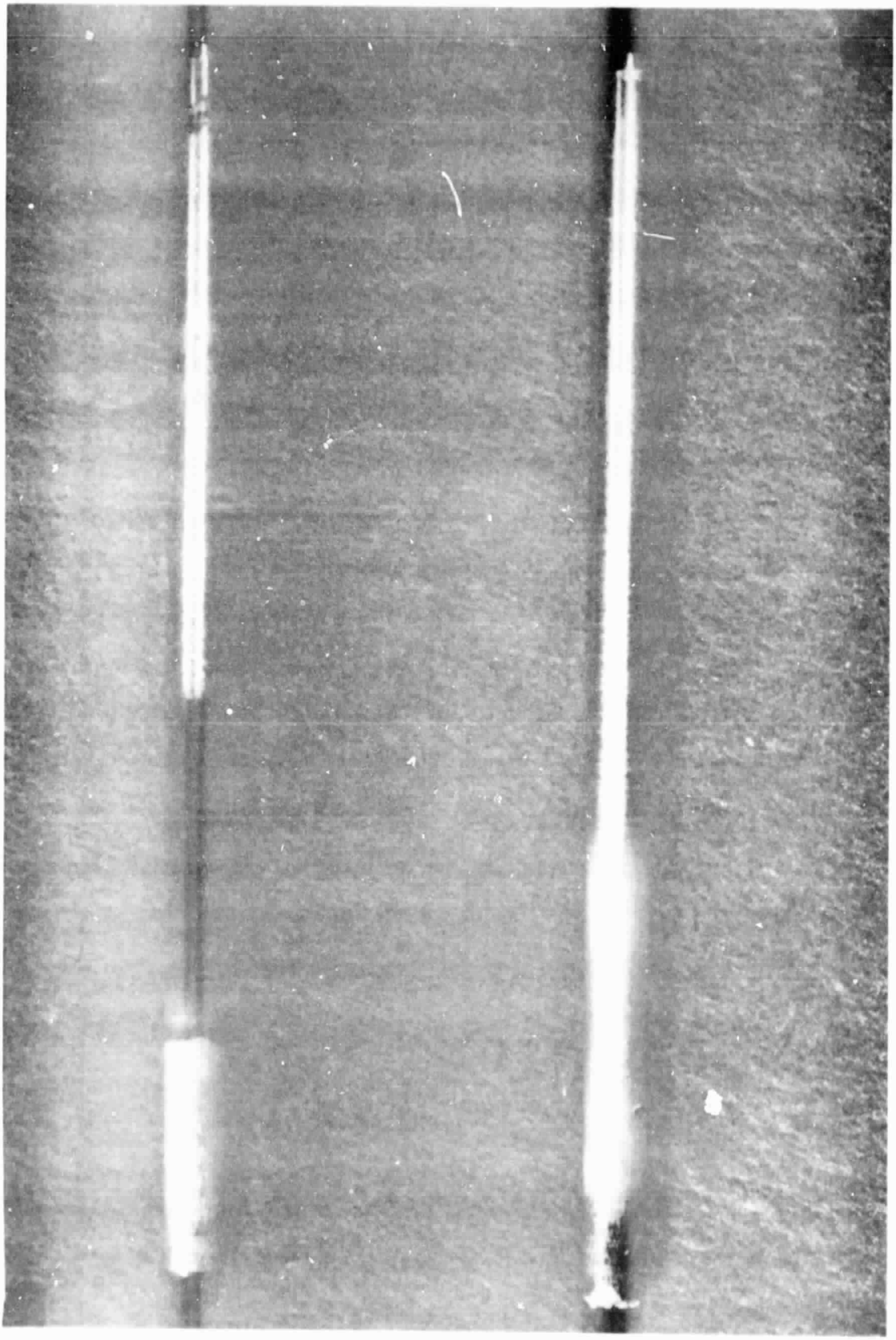

Figure 11. Used VPPA torch electrodes. The arc emerged from the left end. Upper electrode shows oxygen staining. Both, but particularly lower, show ball pickup.

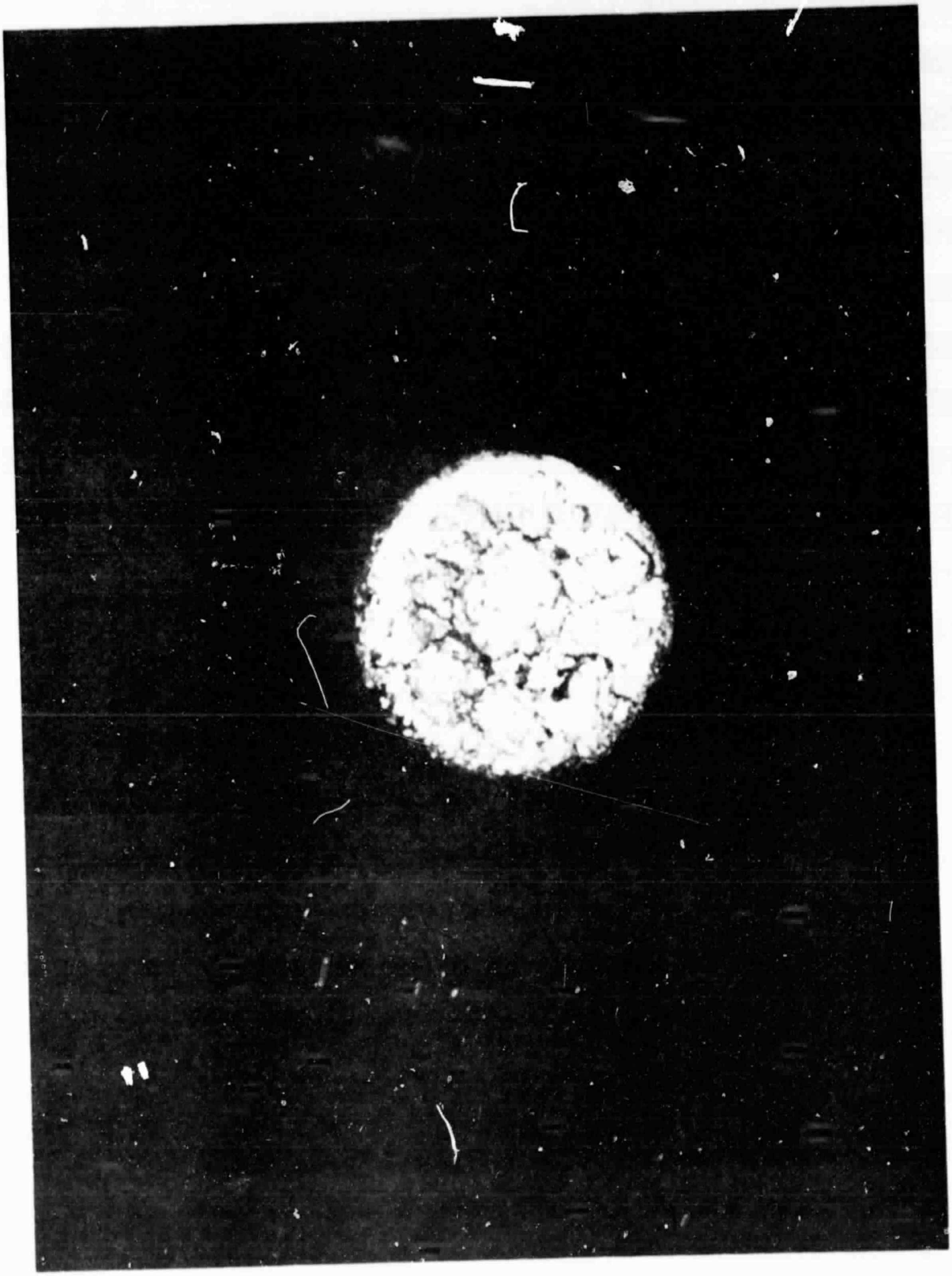

Figure 12. Tip of used tungsten electrode showing ball pickup.

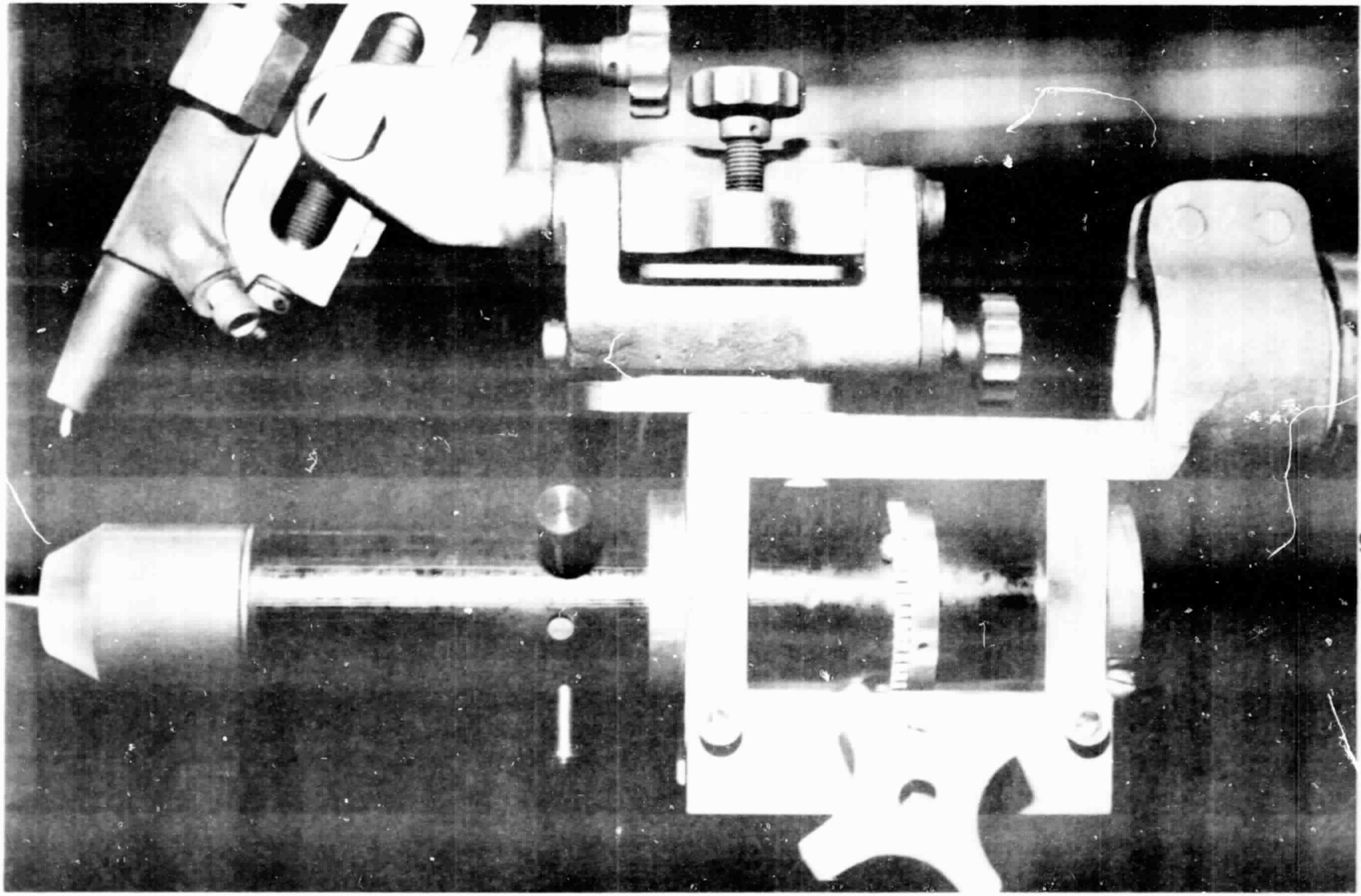

Figure 13. MSFC rotating mount for the VPPA welding torch.

Figure 14. VPPA torch assembly tools.

Weld parameters are listed in Table 1. 1/16-in. diameter 2319 aluminum filler wire was fed into the weld to control weld surface contours.

TABLE 1. WELD PARAMETERS FOR COMPARATIVE VPPA AND GTA WELDS IN 3/8-in. 2219 ALUMINUM ALLOY

	VPPA	GTA
Current:	Straight Polarity (19 msec) 195 A Reverse Polarity (4 msec) ~200 A	210 A
Potential:	Straight Polarity (19 msec) 32.5 V Reverse Polarity (4 msec) ~40 V	12.5 V
Travel Speed:	8 in./min	6.75 in./min
Wire Feed:	38 in./min	35 in./min
Shield Gas:	35 CFH-He	100 CFH-He
Plasma Gas:	7.5 CFH-Ar At 35 in. water pressure	–

A VPPA/GTAW pair of as-welded plates was shaved to remove the root and crown reinforcements and another VPPA/GTAW pair left unshaved. Four 1-in. wide transverse tensile specimens were machined from each plate for a total of 4 x 4 or 16 test specimens. It is not necessary to reduce the area of the test specimen at the center ("dogboning") to control the break site because the weld fusion zone is sufficiently soft to localize the fracture there without reducing the specimen section. The crown and root widths of the VPPA and GTA welds were approximately the same (about 7/16-in. and 1/4-in., respectively) indicating about the same heat input to the weld metal in spite of the higher heat input to the VPPA welds [14]. The VPPA process generated approximately 50 kJ/in. of weld; the GTAW process 23 kJ/in. However, nozzle coolant losses of about one-fourth of the VPPA power have been measured, and total VPPA power loss (including the nozzle coolant loss) estimates based on thermocouple measurements suggest that another quarter of the power is lost in the keyholing plasma jet that passes out through the backside of the workpiece. Thus, after losses, the VPPA process delivers about the same amount of power to the workpiece as the GTAW process for the situation in question.

The ultimate tensile strengths of the samples are shown in Table 2. A statistical analysis (F-test) of this data shows to a 95 percent confidence level that:

1) There is no difference in strength between VPPA and GTA welds in the as-welded condition.

2) The VPPA welds are somewhat stronger than the GTA welds when the weld bead surfaces are shaved first.

TABLE 2. ULTIMATE TENSILE STRENGTH (KSI) OF COMPARATIVE VPPA AND GTA WELDS

		VPPA	GTA
As-Welded:		40877	39993
		40885	40212
		40481	40125
		40141	40579
	Mean	40596	40227
	Std. Dev.	309	218
Shaved:		38042	37023
		38104	37232
		38020	36953
		37819	36762
	Mean	37996	36993
	Std. Dev.	107	168

Strengthening effects have been observed in multiple pass welds, both GTA and VPPA. Research into the mechanism by which the multiple pass strengthening effect operates is underway at Marshall Space Flight Center and Martin Marietta Corporation's Michoud Assembly Facility and will be addressed in a subsequent report.

Weld Gas Purity Requirements

Gas purity is an essential factor in achieving quality welds in any shielded arc process. The problem of impurities, when manifest, is normally resolved by eliminating the source of the contamination. However, if the gas supply itself is contaminated, serious schedule interruptions can result, particularly where large, manifolded distribution systems are employed.

During a period of peak activity in the VPPA program, a means of accommodating transient periods of minor source gas contamination was developed. Centorr Model 2G-100-SS gettering furnaces were installed between the argon and helium supplies and the plasma torch as shown in Figure 6. These furnaces expose the weld gases to titanium at 800°C, which reacts with and removes, or "getters" impurities.

Gas contamination affects the VPPA process in several ways. Inside the torch, oxygen from water vapor decomposed in the arc can produce a visible oxide film stain on the tungsten electrode as shown in Figure 11. The plasma jet may sputter and exhibit a green coloration from copper eroded from the nozzle under erratic flow conditions. The weld itself may exhibit a peppery looking weld surface, presumed to be fine porosity due to hydrogen gas from decomposed water vapor. Under more severe conditions the torch may leave behind it a train of irregularities and holes in the weld bead.

A rough estimate of the quantity of water vapor tolerable in weld gas can be made on the basis of the following assumptions:

1) A hydrogen content in excess of about 0.1 cm^3 per 100 grams of metal results in porosity. This value comes from sand castings [15] and could be somewhat higher for a weld fusion zone, if cooling is rapid enough to hinder the nucleation of bubbles.

2) All hydrogen in the weld gas dissolves in the weld metal.

3) All water vapor in the weld gas is broken into gaseous hydrogen and oxygen in the welding arc.

If the weld gas volumetric flow rate is $\dot{Q}$ and the weld gas density is ρ_g, then the mass flow rate of weld gas is $\rho_g \dot{Q}$. If the weight fraction of water vapor is C, the density of water vapor is ρ_{H_2O}, and the density of hydrogen is ρ_{H_2}, then the volume flow rate of hydrogen is

$$C\,\rho_g \dot{Q} \left(\frac{1}{\rho_{H_2O}}\right)\left(\frac{\rho_{H_2O}}{\rho_{H_2}}\right)$$

or

$$C\left(\frac{\rho_g}{\rho_{H_2}}\right)\dot{Q} \ ,$$

assuming the amount of water vapor contamination is small.

The mass of metal soaking up this hydrogen per unit time is ρ_M AV where ρ_M is the density of the metal, A is the cross section of the weld, and V is the weld speed.

The critical concentration C_{CRIT} of water vapor can be estimated by equating the volume flow rate of hydrogen divided by the mass flow rate of metal receiving it to the hydrogen content that would cause porosity, i.e., 0.1 cm^3/100 grams of metal.

If the hydrogen and weld gas are measured at standard temperature and pressure, and if the weld metal is aluminum, then for argon, the plasma gas,

$$C_{CRIT} \approx 5\,\frac{AV}{\dot{Q}} \tag{5}$$

and for helium, the shield gas,

$$C_{CRIT} \approx 50\,\frac{AV}{\dot{Q}} \tag{6}$$

where

C_{CRIT} = critical water impurity level in ppm

A = weld cross sectional area in in.^{2}

V = weld speed in in./min

$\dot{Q}$ = weld gas flow rate in ft^3/hr.

Representative values A = 0.15 in.^{2}, V = 8 in./min, and $\dot{Q}$ = 6 ft^3/hr for the argon plasma gas, 50 ft^3/hr for the helium shield gas yield critical contamination levels of 1 ppm for both argon and helium. If only a tenth of the hydrogen produced enters the weld, the rest escaping, then about 10 ppm water vapor contamination could be acceptable. At these critical concentration levels problems with gas purity are indeed to be anticipated.

Hydrogen enters the weld puddle at the surface, at different rates depending upon the temperature. At the puddle edge, at the melting temperature of the metal, (pure) aluminum can absorb 0.69 cc of hydrogen gas for every 100 gm of metal [16]. Closer to the spot where the arc impinges on the puddle surface, more hydrogen, up to 20.9 cc per gm of metal [17] can be dissolved. Circulation of molten metal within the weld puddle can mix portions of the puddle containing very high quantities of hydrogen into the rest of the metal. This condition can lead to higher than equilibrium hydrogen concentrations in some parts of the weld [18,19]. A high level of hydrogen supersaturation can cause severe porosity. Conversely, if the hydrogen content in the weld gases can be kept to sufficiently low levels, rejectable porosity would not normally be expected.

IMPLEMENTATION OF THE VARIABLE POLARITY PLASMA ARC PROCESS AS A PRODUCTION PROCESS

Phase 1: Preliminary Study

The steps by which the VPPA process will partially replace the GTA process on the external tank were begun in January 1979 with a preliminary study carried out on a simplified welding system. The system centered around a 400 A plasma torch powered by a Hobart Alternate Polarity Cyber-TIG II power supply with an 800 High Pulse Series Programmer. Essentially a hand welding system, it was modified by attaching the torch to a power manipulator, but full automation was lacking. No automatic voltage control was provided; the torch/work spacing was controlled by hand.

It was established by the end of a six month study of the VPPA process that very significant cost reductions ought to be possible by replacing the GTA welding process currently used to assemble the Space Shuttle external tank by the VPPA process. The cost reductions expected were to come from the ease with which sound, porosity free welds are made with the VPPA process. Joint preparation could be simplified by elimination of scraping and filing procedures presently required for GTAW, and weld quality still remained so high as to greatly reduce repair costs when compared to GTA welding. Further, a reduction in peaking and a consequent reduction in depeaking costs was indicated by the preliminary study. Ultimately, the most significant cost savings may be derived by reducing the 100 percent X-ray inspection now imposed and replacing it with a sampling plan to verify weld quality.

Phase 2: Equipment Development and Design Allowables

Following up the promising results of the preliminary study, concurrent programs for equipment development and establishment of design allowable properties were instituted. A complete VPPAW system was set up at Marshall Space Flight Center beginning in late 1979. Over the ensuing time period improvements were introduced into the system as follows:

1) Computer controls

2) A modified automatic voltage control

3) A modified torch and torch assembly procedure

4) Getter furnaces to remove weld gas impurities.

During this period studies of the heat flow in the VPPA welding process and of the differences between VPPA and GTA weldments were also carried out.

The design allowable study carried out during this phase showed that the new welding process would produce acceptably strong weldments. If the VPPAW process would have required redesign of the external tank to reduce weld stress, the process would have been unacceptable and would have been abandoned at this point.

Phase 2 came into full operation in December 1980 with the delivery of the computerized VPPA welding system to MSFC and was extended to the Michoud Assembly Facility of Martin Marietta Aerospace with the delivery there of a second computerized VPPAW system in March 1981.

Table 3 describes the main features of the design allowables test program.

TABLE 3. DESIGN ALLOWABLE PROGRAM FEATURES

- Welding (Thicknesses = 0.125, 0.250, 0.375, 0.500, 0.650, 0.800, 1.00 in.)
- Test specimens (both tensile and fracture toughness, including notching and cycling the latter)
- Weld surface planishing (some specimens)
- Mismatch and peaking removal (some specimens)
- Mechanical testing (tensile and fracture toughness)
- Analysis of test data
- Endurance test of equipment (3-hr continuous operation)

The endurance test cited in Table 3 consisted in a continuous operation trial of the system for a period of 3 hr and 6 min at a current load of 220 A. To obtain a sufficiently long plate the weld was spiraled up the side of a 7 ft diameter cylinder. Measurements of temperatures during this test indicated that about one-quarter of the torch power was lost to the plasma gas nozzle, and suggested the desirability of increasing the surface area of the heat exchanger which dissipates the nozzle coolant heat.

Phase 3: Demonstration with Production Tooling and Welder Training Program

Upon receipt of favorable results from the A-allowable testing program, VPPAW equipment was demonstrated with actual production tooling and a training program for Michoud Assembly Facility welders and welding engineers was set up.

The 5015 weld fixture, which holds the panels comprising a 15 ft long barrel section of the external tank, was selected for the demonstration. Assembly of the barrel from panels requires 10 vertical position, longitudinal welds as described in Table 4. The demonstration was carried out in July-August 1982 [20].

TABLE 4. 5015 FIXTURE DEMONSTRATION WELDS

Number of Welds	Thickness (in.)	Number of Passes
4	0.320	2
1	0.320	1
2	0.320/0.550 Taper	2
1	0.320/0.650 Taper	3
1	0.320/0.650 Taper	2

The 5015 fixture differed from previously used experimental fixtures in two ways. The higher heat sink effect of the 5015 fixture required an extra 10 to 15 A weld current. The chimney effect in the 5015 weld channel required baffles at top and bottom to prevent disturbance of the shield gas by rising air currents.

All the weld strengths developed on the 5015 fixture were comparable to corresponding GTA welds made on the same fixture and were judged successful. Fracture toughness testing is nearing completion and will be reported in the second interim document.

During this phase, three welding engineers and seven welders from the Michoud Assembly Facility were trained in the theory and use of VPPA welding equipment in the welding research laboratory at Marshall Space Flight Center. The main emphasis in the training program, which covered theory, equipment, and program (A-allowables), was hands-on operation of the equipment. Welder trainees were asked to diagnose deliberately set equipment maladjustments and to restore correct operation. Length of training varied from one to four weeks, depending upon the release time permitted by the trainees' work schedules. Additional problem solving time for welding engineers was and is arranged when necessary in the context of general operations.

Phase 4: The Pathfinder Project

Pathfinders are defined as subassemblies produced on a production fixture, to demonstrate the acceptability of a major tool, hardware, or process change. They normally become flight articles if, after inspection and associated witness panel testing, it can be demonstrated that all engineering requirements for the article have been met. In the external tank VPPA weld demonstration project, the major weld tools will be divided into three groups based on the attitude of the weld torch and the relative motion between the torch and part. A VPPAW demonstration pathfinder will be cycled through one tool in each group with the results considered applicable to all other tools in the same group. The groups consist of:

a) A fixed part with horizontal torch attitude and vertical torch movement.

b) A part rotating about its horizontal axis with a fixed horizontal torch.

c) A fixed part with a moving torch with attitude change from horizontal to vertical.

The first introduction of variable polarity plasma arc welding into external tank production will occur with Group (A) tools. The T04A5015 Vertical Barrell Assembly Fixture has been chosen for initial pathfinder demonstration.

MECHANICAL PROPERTIES OF VPPA WELDMENTS – AN INTERIM EVALUATION

Test Program Design and Data Analysis Groundrules

Tables 5 through 10 list the (minimum) numbers and types of tests planned for in the design allowables test program.

The test program was designed in accordance with the following considerations:

1) Data analysis was to be based on the guidelines presented in MIL-HDBK-5C, Chapter 9.

2) One data set (0.25 in. thick, single pass, room temperature) would include 300 specimens and would be used to establish "normality."

3) Basic room temperature allowables for other thicknesses and numbers of weld passes would be based on data sets of 50 or more specimens, with A-basis allowables calculated using one-sided Tolerance Limit Factors from MIL-HDBK-5C, Table 9.6.4.1.

4) Allowables for combinations of mismatch and peaking, and for various weld repair procedures, were to be established by structural analysis methods ("BOSOR") using a maximum allowable fiber stress based on weld certification requirements. For purposes of comparison with GTAW requirements, and for establishing standards for the preparation of repair specimens, individual mismatch and peaking "allowables" for each thickness would be based on sets of 50 or more specimens tested at room temperature. Subsets of approximately 10 specimens of equal mismatch or peaking would be analyzed separately by MIL-HDBK-5C methods to establish "A-basis" allowables for each set. These "allowables" were to be plotted to establish the permissible mismatch and peaking values, based on a strength requirement of 31 ksi. (Note: Current external tank propellant tank weld thicknesses are based on a net

strength requirement of 31 ksi ultimate.) Individual mismatch, peaking, and repair "allowables," other than those described above, were to be generated mainly for information only and would be based on sets of 20 or fewer specimens.

Results

The data presented in Tables 11 through 15 for 0.125, 0.250, 0.375 (one and two pass) and 0.500 (two pass) in. thicknesses represent the compilation of mechanical property data available as of February 1983. The data are final; it is not planned to add to any of the sets presented here. For any given thickness a significant change in allowables is unlikely, but minor changes to accommodate grouping of sets into thickness ranges are possible. Therefore, the design allowables listed here should be considered interim design allowables.

A-basis allowables, where appropriate, are shown in the right-hand columns. The allowable peaking and mismatch values described above have been indicated in parentheses on the +350°F, -320°F, and -423°F lines. In some cases the mismatch and peaking allowables have been conservatively adjusted to account for scatter, based on data from other thicknesses and taking producibility into account.

Based on the data developed to date, weld tool certification requirements will be 38 ksi minimum up to 0.40 in. thickness and 36 ksi minimum above 0.40 in. thickness.

CONCLUSIONS

The Variable Polarity Plasma Arc Welding system which: (1) reduces weld repair costs through virtual elimination of porosity; (2) reduces joint preparation costs through elimination of the need to scrape or draw file faying surfaces; and (3) reduces depeaking costs by reducing the amount of peaking to be eliminated; will allow, based on statistical analysis of data from 0.125, 0.250, 0.375, and 0.500 in. thick test welds, weld tool certification requirements of 38 ksi minimum for thicknesses up to 0.40 in. and 36 ksi minimum for thicker sections. Data for 0.650, 0.800, and 1.00 in. thicknesses is in preparation and the stress levels cited are to be considered interim levels at present.

Equipment development stages have largely been completed and have been chronicled in this report.

Welder training programs have been implemented and demonstration welds have been made on a production fixture (5015).

The Pathfinder Project, in which a pilot production operation initiates final implementation of the VPPA process into the Space Shuttle External Tank assembly process, is scheduled to get under way as this document is completed.

As a result of the successful process development program and initial implementation effort to date, plans are underway to incorporate the VPPA process on several other fixtures in a timely manner so as to increase the output potential of the major weld fixtures. In addition, the high quality of VPPA welds made to date merits strong consideration for reducing the 100 percent X-ray inspection now imposed on the welds of the external tank.

TABLE 5. MINIMUM REQUIRED NUMBER OF TENSILE TESTS

Thickness	Temperature (°F)	As Welded	Mismatch	Peaking	Repair	M/H Peak Removal (5)	M/H Mismatch Removal (6)	Planishing (7)
0.125	RT	50	60 (1)	50 (3)	3	40	30	30
	-320	20	10 (2)	10 (4)	3	5	5	5
	-423	20	10 (2)	10 (4)	3	5	5	5
0.250	350	20	10 (2)	10 (4)	3	5	5	5
	RT	300	50 (1)	50 (3)	3	40	30	30
	-320	20	10 (2)	10 (4)	3	5	5	5
	-423	20	10 (2)	10 (4)	3	5	5	5
0.375	350	20	10 (2)	10 (4)	3	5	5	5
	RT	50	50 (1)	50 (3)	3	40	30	30
	-320	20	10 (2)	10 (4)	3	5	5	5
	-423	20	10 (2)	10 (4)	3	5	5	5
0.500	RT	50	60 (1)	40 (3)	3	40	30	40
	-320	20	10 (2)	10 (4)	3	5	5	5
	-423	20	10 (2)	10 (4)	3	5	5	5
0.650	RT	50	40 (1)	40 (3)	3	–	–	–
	-423	10	10 (2)	10 (4)	3	–	–	–
0.800	RT	50	40 (1)	30 (3)	3	–	–	–
	-423	10	10 (2)	10 (4)	3			
1.00	RT	50	40 (1)	30 (3)	3	–		20
	-423	10	10 (2)	10 (4)	3			5

1. See Table 6.
2. Mismatch will be a constant – maximum permitted from room temperature results (see Table 6).
3. See Table 6.
4. Peaking will be a constant – maximum permitted from room temperature results (see Table 6).
5. Use one or two panels as required. Use maximum peaking permitted.
6. Use one of two panels as required. Use maximum mismatch permitted.
7. Number of passes and bead height requirements are TBD.

TABLE 6. MINIMUM REQUIRED NUMBER OF TENSILE TESTS FOR MISMATCH

Thickness (in.)	0.007	0.010	0.013	0.015	0.020	0.030	0.040	0.050	0.060	0.070	0.080	Total
0.125	10		10		10	10	10			10		60
0.250		10		10		10	10			10		50
0.375					10	10	10		10	10		50
0.500					10	10	10	10	10		10	60
0.650					10		10		10		10	40
0.800					10		10		10		10	40
1.00					10		10		10		10	40
Totals	10	10	10	10	60	40	70	10	50	30	40	340

TABLE 7. MINIMUM REQUIRED NUMBER OF TENSILE TESTS FOR PEAKING

Thickness (in.)	Degrees of Peaking				
	2°	4°	6°	8°	10°
0.125	10	10	10	10	10
0.250	10	10	10	10	10
0.375	10	10	10	10	10
0.500	10	10	10	10	–
0.650	–	10	10	10	–
0.800	–	10	10	10	–
1.00	–	10	10	10	–
Totals	40	70	70	70	30

TABLE 8. MINIMUM REQUIRED NUMBER OF TENSILE TESTS FOR PEAKING REMOVAL

Thickness (in.)	As Welded Peaking Angle	Reworked Peaking Angle				Cryogenic Tests*	
		0°	2°	4°	6°	-320°F	-423°F
0.125	10°	10	10	10	10	5	5
0.250	10°	10	10	10	10	5	5
0.375	10°	10	10	10	10	5	5
0.500	8°	10	10	10	10	5	5
Totals		40	40	40	40	20	20

*Note: The reworked peaking angle for the cryogenic tests will be determined based upon the results of the room temperature peaking tests.

ORIGINAL PAGE IS
OF POOR QUALITY

TABLE 9. MINIMUM REQUIRED NUMBER OF TENSILE TESTS FOR MISMATCH REMOVAL

Thickness (in.)	As Welded Mismatch (in.)	Reworked Mismatch (in.)			Cryogenic Tests*	
		0.020	0.040	0.060	-320°F	-423°F
0.125	0.070	10	10	10	5	5
0.250	0.070	10	10	10	5	5
0.375	0.100	10	10	10	5	5
0.500	0.100	10	10	10	5	5
Totals		40	40	40	20	20

*NOTE: The reworked mismatch for the cryogenic tests will be determined based upon the room temperature tests.

TABLE 10. MINIMUM REQUIRED NUMBER OF FRACTURE AND CYCLIC TESTS

Thickness	Temperature (°F)	Fracture	Cyclic
0.125	RT	8	--
0.250	RT	12	6
	-320	12	6
0.375	RT	12	6
	-320	12	6
	-423	12	--
0.500	RT	8	--
0.800	RT	5	--
1.000	RT	5	--
Grand Total = 110			

TABLE 11. 0.125-in. SINGLE PASS TEST DATA

Thickness (in.)	Test Type	Temperature (°F)	Number Spec's.	Mismatch (in.)	Peaking (deg – min)	Fail Stress (Ksi)			
						Range	Mean	Std. Dev.	"A-Basis"
0.125	**Baseline**	R.T.	57	0 – 0.030	0 – (1-30)	40.7 – 47.3	45.4	1.35	41.5
0.125	**Baseline**	-320	20	0.001 – 0.013	–	54.7 – 61.1	57.3	1.62	52.0
0.125	**Baseline**	-423	20	0.001 – 0.010	< (0-52)	60.9 – 68.4	64.8	2.33	57.1
0.125	**Mismatch**	R.T.	10	(0.007) 0.006 – 0.011	(0-21) – (1-9)	43.4 – 46.3	45.2	0.95	41.4
0.125	**Mismatch**	R.T.	10	(0.013) 0.011 – 0.015	(0-49) – (1-26)	43.9 – 45.5	44.7	0.49	42.7
0.125	**Mismatch**	R.T.	10	(0.020) 0.015 – 0.021	(0-10) – (0.52)	42.1 – 44.6	43.2	0.84	39.8
0.125	**Mismatch**	R.T.	10	(0.030) 0.030 – 0.035	0 – (0-28)	36.3 – 40.2	38.4	1.38	32.9
0.125	**Mismatch**	R.T.	10	(0.040) 0.035 – 0.043	(0-35) – (1-20)	35.9 – 40.6	37.8	1.47	31.9
0.125	**Mismatch**	R.T.	10	(0.070) 0.065 – 0.075	(0-49) – (1-57)	32.7 – 36.6	34.8	1.13	30.2
0.125	**Mismatch**	-320	10	(0.030) 0.025 – 0.035	(0-28) – (0-55)	43.0 – 55.8	50.8	3.74	35.9
0.125	**Mismatch**	-423	10	(0.030) 0.025 – 0.035	(0-45) – (1-20)	48.7 – 55.1	51.3	1.63	44.8

TABLE 11. (Concluded)

Thickness (in.)	Test Type	Temperature (°F)	Number Spec's.	Mismatch (in.)	Peaking (deg – min)	Fail Stress (Ksi)			
						Range	Mean	Std. Dev.	"A-Basis"
0.125	Peaking	R.T.	11	0.001 – 0.015	(2°) (1-35) – (2-32)	41.7 – 45.3	43.9	1.38	38.6
0.125	Peaking	R.T.	11	0.001 – 0.012	(4°) (3-44) – (4-43)	42.3 – 45.1	43.5	0.95	39.8
0.125	Peaking	R.T.	10	0.002 – 0.019	(6°) (4-33) – (6-40)	39.0 – 43.9	42.0	1.58	35.7
0.125	Peaking	R.T.	11	0.005 – 0.029	(8°) (7-36) – (8-28)	31.0 – 41.0	36.1	3.67	21.9
0.125	Peaking	R.T.	10	0.001 – 0.008	(10°) (9-30) – (10-30)	37.4 – 42.7	40.2	2.02	32.2
0.125	Peaking	-320	10	0.001 – 0.013	(7°) (6-33) – (7-29)	51.1 – 60.1	57.1	3.41	43.5
0.125	Peaking	-423	10	0.001 – 0.016	(7°) (6-30) – (7-29)	39.3 – 51.4	46.8	4.32	29.6
0.125	Repair	R.T.	3	0.016, 0.020, 0.040	(1-2), (0-49), (0-55)	45.8 – 49.6	47.2	–	–
0.125	Repair	-320	3	0.042, 0.051, 0.055	(1-23), (1-54), (1-54)	46.5 – 51.2	48.4	–	–
0.125	Repair	-423	3	0.022, 0.006, 0.043	(0-0), (0-42), (1-20)	55.3 – 64.1	58.2	–	–

ORIGINAL PAGE IS
OF POOR QUALITY

TABLE 12. 0.250-in. SINGLE PASS TEST DATA

Thickness (in.)	Test Type	Temperature (°F)	Number Spec's.	Mismatch (in.)	Peaking (deg – min)	Fail Stress (Ksi)			
						Range	Mean	Std. Dev.	"A-Basis"
0.250	Baseline	+350	20	–	–	34.1 – 37.1	35.9	0.68	33.7
0.250	Baseline	R.T.	(~298) 300	–	–	36.7 – 42.0	40.23	0.835	38.13
0.250	Baseline	-320	20			50.4 – 56.1	54.3	1.31	50.0
0.250	Baseline	-423	21	0 – 0.014	(0-14) – (2-15)	57.1 – 64.0	60.5	1.94	54.2
0.250	Mismatch	+350	11	0.020 – 0.025	–	34.0 – 36.8	34.9	0.84	31.7
0.0250	Mismatch	R.T.	10	(0.010) 0.009 – 0.012	-	38.7 – 40.3	39.7	0.45	37.9
0.250	Mismatch	R.T.	11	(0.015) 0.013 – 0.017	–	38.4 – 39.6	38.9	0.36	37.5
0.250	Mismatch	R.T.	7	(0.020) 0.017 – 0.020		37.6 – 38.9	38.4	0.49	36.2
0.250	Mismatch	R.T.	10	(0.030) 0.024 – 0.036	0 – (1-20)	36.4 – 37.6	37.1	0.39	35.5
0.250	Mismatch	R.T.	10	(0.040) 0.036 – 0.040	(1-6) – (3-16)	34.9 – 37.0	36.2	0.60	33.9
0.250	Mismatch	R.T.	10	(0.070) 0.073 – 0.081	(0-14) – (1-2)	30.1 – 31.8	31.1	0.47	29.2
0.250	Mismatch	-320	10	(0.023) 0.020 – 0.025	–	46.8 – 54.7	51.9	2.42	42.6
0.250	Mismatch	-423	10	(0.023) 0.020 – 0.025	(0-25) – (5-0)	48.5 – 56.1	53.3	2.22	44.5

TABLE 12. (Concluded)

Thickness (in.)	Test Type	Temperature (°F)	Number Spec's.	Mismatch (in.)	Peaking (deg – min)	Fail Stress (Ksi)			
						Range	Mean	Std. Dev.	"A-Basis"
0.250	Peaking	+350	12	0.001 – 0.007	(5°) (4-0) – (6-0)	31.6 – 37.6	34.8	1.47	29.3
0.250	Peaking	R.T.	11	0.001 – 0.010	(1-20) – (2-37)	38.2 – 42.1	40.0	1.29	35.0
0.250	Peaking	R.T.	7	0.001 – 0.008	(3-1) (4-21)	37.3 – 38.8	38.1	0.64	35.1
0.250	Peaking	R.T.	13	0.005 – 0.012	(4-56) – (6-40)	35.4 – 38.5	36.9	0.96	33.4
0.250	Peaking	R.T.	10	0.002 – 0.007	(7-20) – (8-53)	34.4 – 36.3	35.6	0.62	33.2
0.250	Peaking	R.T.	9	0.002 – 0.010	(9-0) – (10-33)	33.6 – 35.9	35.0	0.86	31.4
0.250	Peaking	-320	11	0 – 0.007	(5°) (4-25) – (6-0)	49.7 – 54.6	52.2	1.81	45.3
0.250	Peaking	-423	10	0.001 – 0.015	(5°) (4-0) – 6-0)	48.1 – 59.8	55.8	3.56	41.6
0.250	Repair	+350	3	0, 0.003, 0.008	(1-0), (1-5), (1-16)	34.9 – 36.5	35.6	–	–
0.250	Repair	R.T.	3	–	–	38.1 – 39.6	38.8	–	–
0.250	Repair	-320	3	0.002, 0, 0	(0-35), (0-38) (0-45)	51.4 – 52.1	51.7	–	–
0.250	Repair	-423	3	0.008, 0.002, 0	(1-44), (1-2), (0-31)	52.5 – 53.7	53.1		

TABLE 13. 0.375-in. SINGLE PASS TEST DATA

Thickness (in.)	Test Type	Temperature (°F)	Number Spec's.	Mismatch (in.)	Peaking (deg – min)	Fail Stress (Ksi)			
						Range	Mean	Std. Dev.	"A-Basis"
0.375	Baseline	+350	20	–	–	32.5 – 37.8	35.0	1.35	30.5
0.375	Baseline	R.T.	82	–	–	38.0 – 40.9	39.8	0.69	37.9
0.375	Baseline	(-300) -320	20	–	–	52.6 – 56.6	54.2	1.33	49.8
0.375	Baseline	-423	20	0.001 – 0.023	0 – (0-38)	59.3 – 67.3	63.8	2.47	55.6
0.375	Mismatch	+350	10	(0.026) 0.020 – 0.030	(0-7) – (0-42)	34.0 – 37.5	35.2	1.32	30.0
0.375	Mismatch	R.T.	10	0 – 0.010	–	37.4 – 38.8	38.1	0.48	36.2
0.375	Mismatch	R.T.	10	0.016 – 0.025	–	37.0 – 39.1	38.4	0.80	35.2
0.375	Mismatch	R.T.	11	0.026 – 0.034	–	35.0 – 39.6	38.0	1.18	33.5
0.375	Mismatch	R.T.	11	0.031 – 0.046	–	35.4 – 38.3	36.9	0.80	33.8
0.375	Mismatch	R.T.	9	0.058 – 0.073	–	33.6 – 35.2	35.6	0.45	32.7
0.375	Mismatch	-320	10	(0.026) 0.021 – 0.034	(0-0) – (0-14)	45.5 – 52.9	49.4	2.48	39.6
0.375	Mismatch	-423	10	(0.026) 0.020 – 0.035	(0-0) – (0-21)	51.3 – 61.2	55.6	3.46	41.9

TABLE 13. (Concluded)

Thickness (in.)	Test Type	Temperature (°F)	Number Spec's.	Mismatch (in.)	Peaking (deg – min)	Fail Stress (Ksi)			
						Range	Mean	Std. Dev.	"A-Basis"
0.375	Peaking	+350	10	0.001 – 0.014	(5°) (4-46) – (5-14)	32.3 – 34.5	33.0	0.71	30.2
0.375	Peaking	R.T.	11	–	(1-16) – (2-59)	37.1 – 40.3	38.7	1.17	34.3
0.375	Peaking	R.T.	11	–	(3-6) – (4-53)	37.9 – 40.2	39.2	0.80	36.1
0.375	Peaking	R.T.	11	–	(5-17) – (7-1)	33.1 – 37.6	35.5	1.36	30.2
0.375	Peaking	R.T.	10	–	(8-0)	32.5 – 35.1	33.9	0.80	30.8
0.375	Peaking	R.T.	11	–	(10-0)	33.0 – 34.7	33.9	0.52	31.9
0.375	Peaking	-320	10	0.003 – 0.025	(5°) (4-29) – (5-10)	41.8 – 54.7	49.2	3.87	33.7
0.375	Peaking	-423	11	0 – 0.009	(5°) (4-31) – (5-24)	52.2 – 58.5	55.3	2.19	46.8
0.375	Repair	+350	3	–	–	34.1, 35.2, 34.6	34.6	–	–
0.375	Repair	R.T.	3	–	–	39.2, 38.8 38.6	38.8	–	–
0.375	Repair	-320	3	–	–	49.9, 51.2 48.1	49.7	–	–
0.375	Repair	-423	4	–	–	54.7 – 59.9	56.6	–	–

TABLE 14. 0.375-in. TWO PASS TEST DATA

Thickness (in.)	Test Type	Temperature (°F)	Number Spec's.	Mismatch (in.)	Peaking (deg – min)	Fail Stress (Ksi)			
						Range	Mean	Std. Dev.	"A-Basis"
0.375	Baseline	+350	20	0.002 – 0.021	(0-49) – (2-52)	36.0 – 38.1	37.1	0.59	35.1
0.375	Baseline	R.T.	50	0 – 0.017	(0-35) – (1-33)	39.8 – 42.7	41.7	0.72	39.66
0.375	Baseline	-320	20	0.003 – 0.014	(0-55) - (1-51)	53.6 – 58.6	56.1	1.51	51.1
0.375	Baseline	-423	21	0 – 0.014	(0-35) – (2-[illegible]	55.3 – 67.3	63.4	3.05	53.4
0.375	Mismatch	+350	5	(0.050) 0.046 – 0.049	(1-23) – (1-33)	34.0 – 34.9	34.4	0.34	32.5
0.375	Mismatch	R.T.	5	(0.020) 0.015 – 0.023	(0-18) – (0-38)	40.6 – 41.7	41.3	0.47	38.6
0.375	Mismatch	R.T.	6	(0.030) 0.025 – 0.030	(1-20) – (1-47)	39.7 – 40.7	40.3	0.35	38.5
0.375	Mismatch	R.T.	5	(0.040) 0.038 – 0.047	(0-55) – (1-16)	38.0 – 38.8	38.4	0.29	36.8
0.375	Mismatch	R.T.	5	(0.060) 0.052 – 0.062	(1-6) – (1-20)	36.7 – 37.8	37.4	0.43	34.9
0.375	Mismatch	R.T.	5	(0.070) 0.069 – 0.076	(0-14) – (0-31)	34.8 – 35.8	35.3	0.43	32.8
0.375	Mismatch	-320	5	(0.050) 0.045 – 0.050	(1-2) – (1-26)	46.9 – 50.1	48.7	1.27	41.5
0.375	Mismatch	-423	5	(0.050) 0.045 – 0.055	(0-25) – (0-45)	53.0 – 57.7	55.6	2.1	43.6

TABLE 14. (Concluded)

Thickness (in.)	Test Type	Temperature (°F)	Number Spec's.	Mismatch (in.)	Peaking (deg – min)	Fail Stress (Ksi)			
						Range	Mean	Std. Dev.	"A-Basis"
0.375	Peaking	+350	5	0.014 – 0.016	(6°) (6-9) – (6-30)	34.6 – 36.0	35.3	0.54	32.2
0.375	Peaking	R.T.	6	0.006 – 0.009	(2°) (1-26) – (2-7)	41.1 – 41.9	41.3	0.31	39.8
0.375	Peaking	R.T.	5	0 – 0.003	(4°) (3-27) – (4-12)	41.6 – 42.2	41.8	0.24	40.5
0.375	Peaking	R.T.	5	0.002 – 0.006	(6°) (5-48) – (6-47)	36.6 – 40.0	39.0	1.38	31.1
0.375	Peaking	R.T.	5	0 – 0.008	(7-21) – (8-42)	38.6 – 39.7	39.2	0.51	36.2
0.375	Peaking	R.T.	5	0 – 0.004	(9-26) – (10-48)	36.2 – 37.4	36.9	0.45	34.3
0.375	Peaking	-320	5	0.015 – 0.017	(6°) (6-10) – (6-30)	42.7 – 47.6	45.1	2.16	32.7
0.375	Peaking	-423	6	0.004 – 0.014	(6°) (5-31) – (6-12)	45.6 – 54.0	50.7	2.82	36.5

TABLE 15. 0.500-in. TWO PASS TEST DATA

Thickness (in.)	Test Type	Temperature (°F)	Number Spec's.	Mismatch (in.)	Peaking (deg – min)	Fail Stress (Ksi)			
						Range	Mean	Std. Dev.	"A-Basis"
0.500	Baseline	R.T.	53	0.001 – 0.032	(0-14) – (1-54)	39.0 – 41.2	40.3	0.53	38.8
0.500	Baseline	-320	38	0.001 – 0.018	(0-55) – (1.57)	47.7 – 58.0	50.9	2.40	42.8
0.500	Baseline	-423	23	0 – 0.013	(0-52) – (1-30)	51.6 – 64.1	57.0	4.06	44.0
0.500	Mismatch	R.T.	10	(0.020) 0.018 – 0.025	(1-47) – (2-11)	36.2 – 38.6	37.6	0.76	34.5
0.500	Mismatch	R.T.	10	(0.030) 0.028 – 0.033	(1-37) – (2-49)	35.8 – 38.4	37.1	0.98	33.2
0.500	Mismatch	R.T.	10	(0.040) 0.037 – 0.044	(2-18) – (2-52)	34.5 – 36.9	36.1	0.91	32.5
0.500	Mismatch	R.T.	10	(0.050) 0.045 – 0.049	(1-20) – (2-15)	34.9 – 37.7	36.5	0.72	33.6
0.500	Mismatch	R.T.	10	(0.060) 0.059 – 0.065	(0-4) – (2-1)	29.6 – 33.1	31.2	1.08	26.9
0.500	Mismatch	R.T.	10	(0.080) 0.080 – 0.085	(0-18) – (1-40)	27.4 – 30.1	29.3	0.86	25.8
0.500	Mismatch	-320	10	(0.050) 0.046 – 0.055	(1-26) – (2-21)	41.7 – 44.2	42.9	0.77	39.9
0.500	Mismatch	-423	10	(0.050) 0.047 – 0.055	(0-55) – (1-30)	38.3 – 48.9	43.1	3.70	28.4

TABLE 15. (Concluded)

Thickness (in.)	Test Type	Temperature (°F)	Number Spec's.	Mismatch (in.)	Peaking (deg – min)	Fail Stress (Ksi)			
						Range	Mean	Std. Dev.	"A-Basis"
0.500	Peaking	R.T.	10	0.005 – 0.021	(2°) (2-11) – (2-32)	34.8 – 38.8	37.0	1.25	32.0
0.500	Peaking	R.T.	10	0 – 0.007	(4°) (3-30) – (4-22)	35.2 – 37.8	36.7	0.69	34.0
0.500	Peaking	R.T.	10	0.007 – 0.015	(6°) (5-48) – (6-30)	33.5 – 35.6	34.6	0.72	31.8
0.500	Peaking	R.T.	10	0.002 – 0.012	(8°) (7-30) – (8-21)	32.8 – 34.9	33.7	0.69	31.0
0.500	Peaking	-320	10	0.001 – 0.020	(6°) (6-16) – (6-44)	41.1 – 51.2	46.6	3.26	33.6
0.500	Peaking	-423	10	0.001 – 0.015	(6°) (5-31) – (6-9)	48.9 – 56.2	52.3	2.70	41.5
0.500	Weld Repair	R.T.	3	0.006, 0.010, 0.010	(4-56), (5-31), (5-55)	36.2 – 37.7	36.9	–	–
0.500	Weld Repair	-320	3	0, 0.002, 0.003	(4-46), (4-56), (5-48)	47.4 – 51.5	49.7	–	–
0.500	Weld Repair	-423	3	0.004, 0.007, 0.009	(6-9), (6-44), (6-54)	43.5 – 48.4	45.4	–	–

REFERENCES

1. Maecker, H.: Plasmaströmungen in Lichtbögen infolge eigenmagnetischer Kompression. Zeitschrift für Physik, Vol. 141, 1955, pp. 198-216.

2. Metcalfe, J. C. and Quigley, M. B. C.: Heat Transfer in Plasma Arc Welding. Welding Journal, Vol. 54, No. 3, March 1975, Research Supplement, pp. 99-S to 103-S.

3. Petrie, T. W. and Pfender, E.: The Influence of the Cathode Tip on Temperature and Velocity Fields in a Gas-Tungsten Arc. Welding Journal, Vol. 49, No. 12, December 1970, Research Supplement, pp. 588-S to 596-S.

4. Key, J. F.: Anode/Cathode Geometry and Shielding Gas Interrelationships in GTAW. Welding Journal, Vol. 59, No. 12, December 1980, Research Supplement, pp. 364-S to 370-S.

5. Anonymous: Linde Unveils Inert-Gas Tungsten-Arc Cutting of Aluminum. Welding Journal, Vol. 34, No. 11, pp. 1097-1098.

6. Miller, H. R. and Filipski, S. P.: Automated Plasma Arc Welding for Aerospace and Cryogenic Fabrications. Welding Journal, Vol. 45, No. 6, June 1966, pp. 493-501.

7. Privoznik, L. J. and Miller, H. R.: Evaluation of Plasma Arc Welding for 120 in. Diameter Rocket Motor Cases. Welding Journal, Vol. 45, No. 9, September 1966, pp. 717-725.

8. Cooper, G., Palermo, J., and Browning, J. A.: Recent Developments in Plasma Welding. Welding Journal, Vol. 44, No. 4, April 1965, pp. 268-276.

9. Herbst, H. T.: Production Applications for Inert Gas-Shielded Arc Welding. Welding Journal, Vol. 26, No. 5, May 1947, pp. 410-418.

10. Vilkas, E. P.: Square-Wave Welding. IEEE Transactions on Industry and General Applications, Vol. IGA-3, No. 6, November/December 1967, pp. 525-530.

11. VanCleave, B.: Private Communication

12. Regan, R. E.: Plasma Arc Welding: State-of-Art Survey. Boeing Company Report No. D324-11012-1, May 1977. Published as Appendix to: McCaw, R. L.: Plasma Arc Welding of High-Performance Ship Materials. David W. Taylor Naval Ship Research and Development Center, Report No. DTNSRDC/SME-78/34, May 1979, pp. 19-84.

13. Clover, F. R., Jr.: Welding of the External Tank of the Space Shuttle. Welding Journal, Vol. 59, No. 8, August 1980, pp. 17-26.

14. Nunes, A. C., Jr., Novak, H. L. and McIlwain, M. C.: Weld Geometry Strength Effect in 2219-T87 Aluminum. NASA Technical Memorandum TM-82404, March 1981.

15. Cibula, A.: Gases in Cast and Wrought Metals. Twenty-First Autumn Course of the Institution of Metallurgists, Eastbourne, 1967. Printed in Kubaschewski, O., Cibula, A., and Moore, D. C.: Gases and Metals. American Elsevier Publishing Co., Inc., New York, 1970.

16. Ransley, C. E. and Neufeld, H.: The Solubility of Hydrogen in Liquid and Solid Aluminum. Journal of the Institute of Metals, Vol. 74, 1948, pp. 599-620.

17. Grigorenko, G. M. and Lakomskii, V. I.: Solubility of Hydrogen in Aluminum at the Temperatures Characteristic of Arc Welding. Automatic Welding, Vol. 20, No. 12, December 1967, pp. 27-29.

18. Howden, D. G. and Milner, D. R.: Hydrogen Absorption in Arc Melting. British Welding Journal, Vol. 10, No. 6, June 1963, pp. 304-316.

19. Woods, R. A.: Porosity and Hydrogen Absorption in Aluminum Welds. Welding Journal, Vol. 53, No. 3, March 1974, Research Supplement, pp. 97-S to 108-S.

20. McFarlane, W. M.: Interim Report – May through Septemter 1982 – Variable Polarity Plasma Arc (VPPA) 5015 Demonstration. TD 1008 Test Report, November 1982, prepared by Martin Marietta Aerospace, Michoud Division, Advanced Manufacturing Technology, for NASA, George C. Marshall Space Flight Center.

APPROVAL

THE VARIABLE POLARITY PLASMA ARC WELDING PROCESS: ITS APPLICATION TO THE SPACE SHUTTLE EXTERNAL TANK – FIRST INTERIM REPORT

By A. C. Nunes, Jr., E. O. Bayless, Jr., C. S. Jones, III,
P. M. Munafo, A. P. Biddle, and W. A. Wilson

The information in this report has been reviewed for technical content. Review of any information concerning Department of Defense or nuclear energy activities or programs has been made by the MSFC Security Classification Officer. This report, in its entirety, has been determined to be unclassified.

R. J. SCHWINGHAMER
Director, Materials and Processes Laboratory

☆ U.S. GOVERNMENT PRINTING OFFICE 1983–646-058/4