29 October 1982

FLEXIBLE RADIATOR THERMAL VACUUM TEST REPORT

Prepared For

NATIONAL AERONAUTICS AND SPACE ADMINISTRATION
JOHNSON SPACE CENTER

Under Contract NAS9-14776

PREPARED BY:

J. A. Oren

for J. A. Oren
C. W. Hixon

APPROVED BY:

R. L. Cox

TABLE OF CONTENTS

APPENDICES

LIST OF FIGURES

LIST OF TABLES

1.0 SUMMARY/INTRODUCTION

The Flexible Radiator Test was conducted in the NASA/JSC Space Environment Simulation Laboratory, Chamber A, on dates 17 September 1980 thru 19 September 1980 and 29 September 1980 thru 3 October 1980. The purpose of the test was to evaluate the deployment, retraction and thermal/hydraulic performance of the soft tube and hard tube flexible radiator panels.

The soft tube panel test article was a 3.3' by 27' flexible panel designed and fabricated in 1978. It was designed to reject 1.33 kW of heat to a $0^{\circ}F$ sink temperature with $100^{\circ}F$ glycol/water or Coolanol 15 fluid inlet temperature. The panel is stowed by rolling up on a 10 inch diameter by 4 foot long drum and is deployed by inflating two four inch diameter inflation tubes which straighten two coiled flat springs. Retraction is by deflation of the tubes. The flow tube routing is lengthwise in the panel. Fluid flows the 27 feet length through half the tubes and returns the 27 feet through the other half. The tubes are flexible PFA Teflon material, 1/8" O.D., 1/16" I.D. and are spaced 0.75" apart. The soft tube panel is designed for a 90 percent probability of withstanding the micrometeoroid environment of low earth orbit for 30 days.

The hard tube panel test article was a 25 foot long panel which tapers from 48 inches at one end to 32 inches at the other end, for 167 ft^2 of radiating area. It was designed and fabricated in the 1979/1980 time period to reject 1.1 kW to a $0^{\circ}F$ sink temperature. The tubes are 1/8" O.D., .027" I.D. 316 stainless steel tubes which are routed across the width of the panel so they do not flex on retraction. The tube thicknesses are sized to provide a 5 year micrometeoroid life. Freon 21 is the design fluid for this panel. The fluid manifolds which are routed down each long edge of the panel are flexible, fabricated with 1/4 inch metal bellows, and roll up on retraction. Stowage of the hard tube panel is on a 12 inch diameter by 4-1/2 feet storage drum.

The soft tube radiator test article used in this test was subjected to limited prior testing. This testing consisted of a room ambient deployment/retraction test and a thermal vacuum solar exposure test. The deployment test was performed at Vought in May 1978 and the solar exposure test was performed at NASA-JSC in November 1978. Successful deployment and retraction of the panel was witnessed by the NASA contract technical monitor and recorded on 16 mm movie film. The purpose of the solar exposure test was

to evaluate radiator performance degradation due to radiation in the solar wavelength. The panel optical properties and mechanical strength were checked carefully after 100 hours of solar exposure and no degradation was detected. Panel heat rejection also corroborated the conclusion of no measurable thermal performance degradation.

The hard tube radiator test article used in this test was tested previously in an ambient deployment/retraction demonstration which was recorded on 16 mm movie film.

Both radiator panels were in the vacuum chamber at the same time but all testing was done independently with separate timelines. Test fixtures were furnished by NASA/SESL which allowed the radiator panels to be deployed and retracted parallel to the chamber floor. The radiators were tested for approximately 160 hours.

The following results were obtained from the testing of the soft tube radiator panel:

(1) The heat rejection performance was as predicted for the coldwall (-180°F sink) cases. It was less than predicted for the 0°F sink case indicating more severe thermal environments than planned with lamps operating.

(2) The deployment/retraction system performed well at all temperatures. An inflation pressure of 1 to 2 psid was sufficient for deployment. The fluid system pressure did not appear to affect performance. Some "coning" was observed toward the end of the test.

(3) The panel pressure drop was considerably higher than expected. The cause was determined to be excessive corrosion in the outboard manifold.

(4) Fin effectiveness design goal of 0.94 was demonstrated.

The following results were obtained from tests on the hard tube panel:

(1) The panel heat rejection did not perform as expected - rejected about .95 kW vs 1.3 kW expected. The following performance reducing conditions existed or developed during test: unaccounted for radiation blockage (including lamps, table roller, insulated roll-up structure); an unknown amount of fluid was bypassed from radiating surface; damaged and/or poorly constructed fin causing a low overall fin effectiveness.

(2) The outlet manifold experienced thermal distortion (sine wave) at cold temperatures. Distortion did not inhibit deployment/retraction. Slight distortion was apparent at ambient conditions.

(3) An overall fin effectiveness of about 0.5 was obtained, compared to a theoretical value of 0.72.

(4) The panel demonstrated capabilities and limitations of operating at partial deployments. Apparent fluid instability was found at 1/3 deployment under relatively low load conditions.

(5) Obtained higher ΔP characteristics than expected. ΔP was the same at both full deployment and full retraction.

(6) Deployment system performed adequately during test although the following problems were experienced: high tension in deployment cord tended to cut panel material against flow tubes; system repeatability of deployment positions was poor (1g effect); system required additional guidance to prevent binding upon retraction.

The following major conclusions were reached from the testing on the two radiator panels:

(1) The soft tub radiator will reject the design heat load in the space environment.

(2) The high pressure drop observed for the soft tube radiator during the tests were caused by excessive corrosion inside the outboard manifold. Adequate surface treatment and storage procedures are needed to prevent this in the future.

(3) The hard tube radiator heat rejection was about 30% lower than expected at the design conditions. This is likely caused by damage to the fins during deployment and retraction.

(4) The soft tube radiator deployment/retraction system performed well except for some slight coning near the end of the test.

(5) The hard tube radiator deployment/retraction performed adequately except that binding occurred which caused high tension in the deployment cord which resulted in panel damage.

2.0 TEST OBJECTIVES

Two flexible, deployable/retraction, radiators were designed and fabricated by the Vought Corporation. The two radiator panels are distinguishable by their mission life design. One panel is designed with a 90 percent probability of withstanding the micrometeoroid environment of a low earth orbit for 30 days. This panel is designated the "soft tube" radiator after the PFA Teflon tubes which distribute the transport fluid over the panel. The second panel is designed with armored flow tubes to withstand the same micrometeoroid environment but for 5 years. It is designated the "hard tube" radiator after its stainless steel flow tubes.

The primary objectives of testing these radiators fell in two categories. The first was to determine the thermal performance of the radiators under anticipated environmental conditions. The second objective was to demonstrate and evaluate the two deployment systems of the radiators in a thermal vacuum environment. As part of the first objective of mapping the thermal performance of the radiator, data was collected to determine the following:

(1) Radiator heat rejection capability in simulated thermal environments.

(2) Pressure drop characteristics of the panels in deployed and retracted positions.

(3) Transport fluid flow stability in parallel tubes.

(4) Flexible fin material fin effectiveness.

(5) Radiator thermal performance at partial deployment.

The objective to evaluate the two deployment systems in a one-g test had to be principally of a qualitative nature. Deploying and retracting the radiator panels allowed the following to be observed.

(1) Deployment system operating characteristics in a thermal vacuum.

(2) Deployment system operational variations and inconsistencies.

(3) Deployment system forces other than those attributable to gravity and the test support equipment.

3.0 TEST ARTICLE DESCRIPTION

3.1 SOFT TUBE FLEXIBLE RADIATOR

The soft tube flexible radiator, illustrated in Figure 3-1, is designed to reject 1.33 kW to a $0^{\circ}F$ sink using Coolanol 15 or glycol/water as the transport fluid with a $100^{\circ}F$ radiator inlet temperature. Glycol/water was used as the transport fluid in this test. The overall radiator dimensions in the fully deployed configuration are 3.3 feet wide by 27 feet long to give a total radiator area (from both sides) of 178 square feet. In the stowed configuration, the radiator rolls up on a drum 10 inches in diameter by 4 feet long to a final diameter of approximately 17 inches.

The soft tube panel was constructed from six basic components: (1) the flexible fin, (2) panel flow tubes, (3) fluid manifolds, (4) deployment inflation tubes, (5) retraction springs, and (6) the stowage drum. Principal to the capability of the panel to reject heat is the fin material. It consists of two layers of 40 x 67 mesh silver wire screen and two layers of 3-mil FEP Teflon film. All four layers are heat fused into a flexible composite conducting film. Figure 3-2 illustrates the resulting film cross section. Solar absorptance of the fusion bonded laminate is about 0.16 and emittance is 0.71.

To distribute the heat from the transport fluid over the panel area, 50 flow tubes of PFA Teflon (1/8" O.D. x 1/16" I.D.) spaced .75" apart are used. Fusion bonding was used to form the laminate of the two fin layers sandwiching the flow tubes. These flow tubes run parallel to the long dimension of the radiator panel and connect to aluminum manifolds. The tube-to-manifold connections are made with standard Swagelock fittings, 3M EC2216 adhesive, and tube inserts which allowed the fittings to capture the soft tubing without collasping the tube wall. Samples of these connections were tested for extended periods in a $200^{\circ}F$ water bath at 100 psi internal pressure without leakage.

The fluid manifolds distribute the flow to the panel such that 25 flow tubes receive inlet flow. At the drum end of the radiator, a second manifold collects the flow and directs it into the other 25 flow tubes on the return leg back along the panel into the outlet manifold (see Figure 3-1). The outlet manifold collects the transport fluid from the radiator and directs it back into the environmental control system.

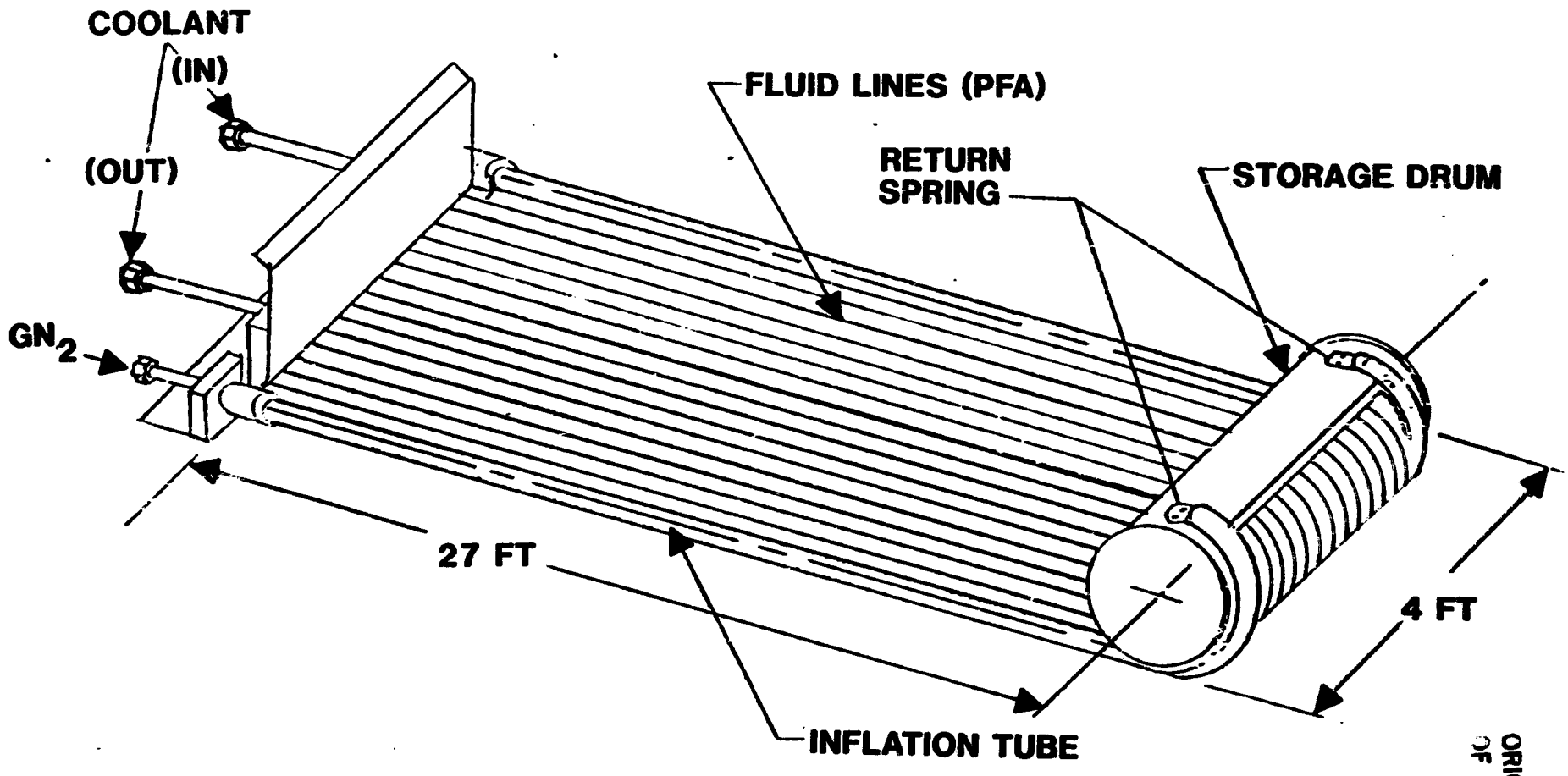

FIGURE 3-1 SOFT TUBE FLEXIBLE RADIATOR TEST ARTICLE

ORIGINAL PAGE IS
OF POOR QUALITY

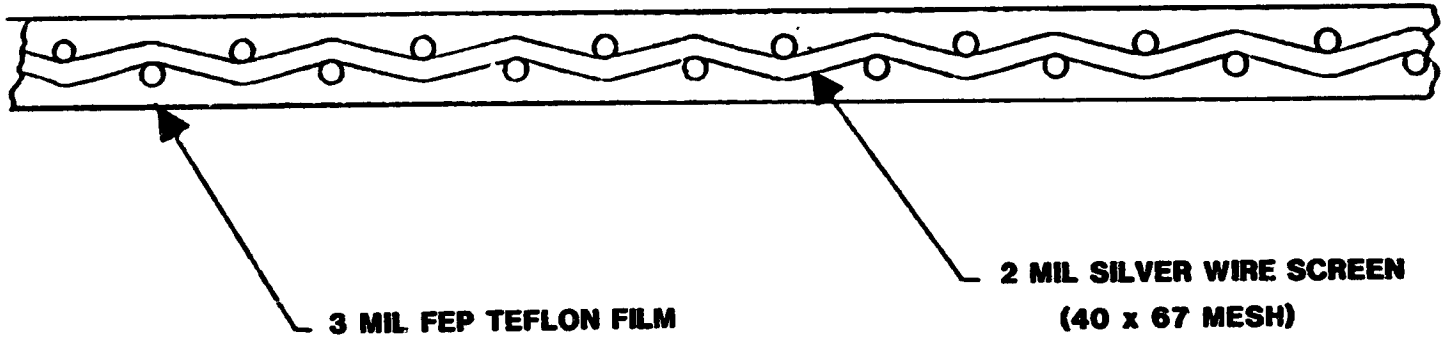

NOTE: ONE LAYER OF TWO-LAYER LAMINATE SHOWN

FIGURE 3-2 SOFT TUBE FLEXIBLE RADIATOR FIN MATERIAL

ORIGINAL PAGE IS
OF POOR QUALITY

The flexible radiator panel is stowed in approximately eight wraps on a 10 inch drum (see Figure 3-3). Four inch diameter inflation tubes made by Sheldahl of Kevlar/mylar are attached along each side of the radiator panel. Specially prepared flat springs are incorporated in each inflation tube in a pocket along the drum side of the inflation tube. The retraction springs must be closely matched as to the magnitude of force each exerts. A mismatch in retraction spring force will not allow the radiator panel to wind-up in the original stowage volume. A spring adjustment capability was designed into the spring hold down to fine tune the panel deployment/retraction path. Panel deployment is achieved by pressurizing ($\approx$ 1 psig) the inflation tubes which work against the retraction spring force to roll the stowage drum outward exposing increasing amounts of panel area.

Table 3-1 summarizes some of the important design parameters for the prototype soft tube radiator panel. These parameters represent the optimum design for the conditions imposed.

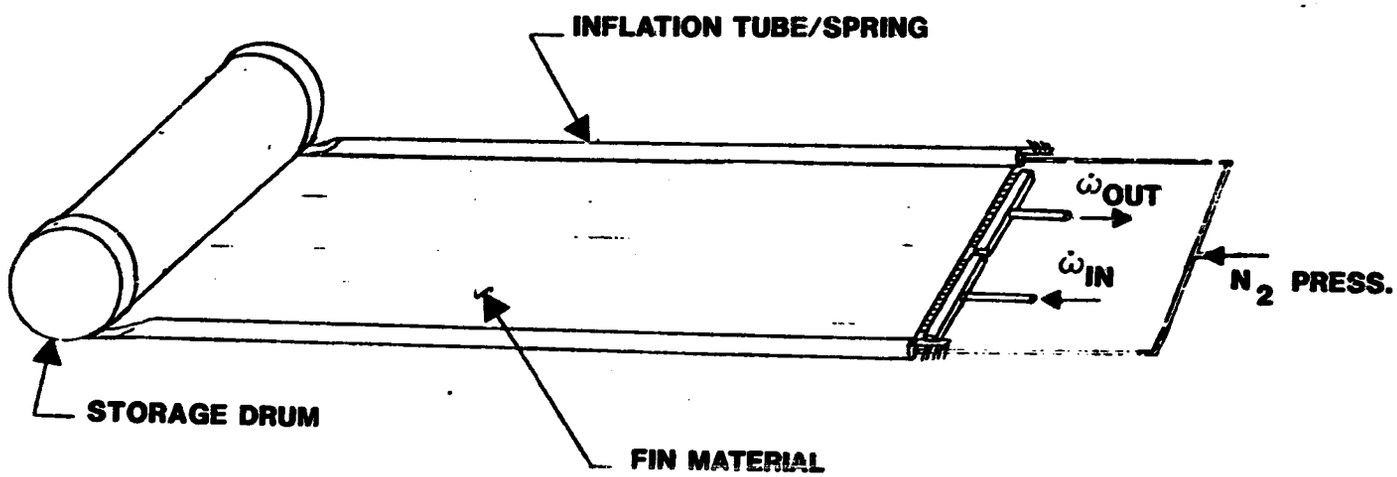

FIGURE 3-3 SOFT TUBE FLEXIBLE RADIATOR PANEL (PARTIAL DEPLOYMENT)

ORIGINAL PAGE IS
OF POOR QUALITY

TABLE 3-1

SOFT TUBE FLEXIBLE RADIATOR PARAMETERS

Coolant Fluid	Coolanol 15
Radiator Panel Length	27'
Radiator Panel Area	89.1 Ft^2
Radiator Panel Width	3.3'
Number of Tubes	50
Tube Spacing	0.75"
Tube Outside Diameter	0.125"
Tube Inside Diameter	0.0625"
Relative Weight*	58.3 lb.
Pressure Drop	25.5 psi
Bending Moment for 10" Dia Drum	14 in-lb
Minimum Outlet Temp (100°F Inlet)	-70°F
Radiator Fin Emissivity	0.71
Effective Panel Absorptivity (Solar)	0.16
Radiator Fin Efficiency	0.943
Spring Dimensions (5" Dia Mandrel)	0.167" x 3" x 31'

* The relative weight includes manifolds, the deployment drum, retraction springs, transport tubing and fittings, transport fluid, radiator fins, and the weight penalty for fluid pressure drop.

3.2 HARD TUBE FLEXIBLE RADIATOR

The hard tube flexible radiator panel design is illustrated in Figures 3-4 through 3-6. The panel is 25 feet long and tapers from 48 inches at the base to 32 inches at the end, thus providing 167 ft^2 of radiating area. This panel uses R-21 as the transport fluid and is designed to reject 1.1 kW to a 0^oF sink. In the stowed configuration the panel rolls up on a drum 12 inches in diameter to a final diameter of approximately 22 inches. The radiator panel is made of two layers of 120 x 120 silver wire mesh sandwiched between four sheets of Teflon film. This layup, illustrated in Figure 3-6, is then heat bonded around 101, 1/8" O.D., 316 stainless steel tubes on three inch centers. The stainless steel cross-tubes are plumbed together in parallel by means of a steel manifold comprised mostly of metal bellows flexible tubing. The cross tubes are welded into "tee" fittings which are brazed to the bellows tubing. The panel is tapered to allow a smaller storage volume by having succeeding wraps lay inside the manifolds and linkages. The amount of taper is designed to provide graduated flow distribution in the cross tubes. The manifolds are protected from micrometeorites by box shaped mechanical linkages which also provide stiffness for deployment.

Deployment and retraction of the panel is accomplished by a combination of a deployment motor and retraction springs. The panel is initially rolled on the drum and is deployed by rotating the drum with a deployment motor and chain drive. The linkage assembly illustrated in Figure 3-7 provides stiffness in the direction of deployment allowing the panel to be erected in zero-g. A deployment guide roller is provided for directional control. A cable on each side of the panel passes through an eyelet on the linkages (see Figure 3-7) on the side opposite the hinge point to rigidize the panel in the deployed position. One end of these cables is fixed to the drum and the other attached to constant force springs located in a box on the end of the panel to maintain tension during and after deployment. A retraction spring provides force to return the panel to the stowed position on the drum when the direction of the deployment motor is reversed. This constant 40.9 $\pm$ 4 lb_f spring is located underneath the drum and is attached by a cable and pulley system to a drum axle spool. As the drum rotates for deployment, the cable is rolled up the drum spool placing the retention springs in tension. When retraction is desired, the deployment motor is reversed and acts as a

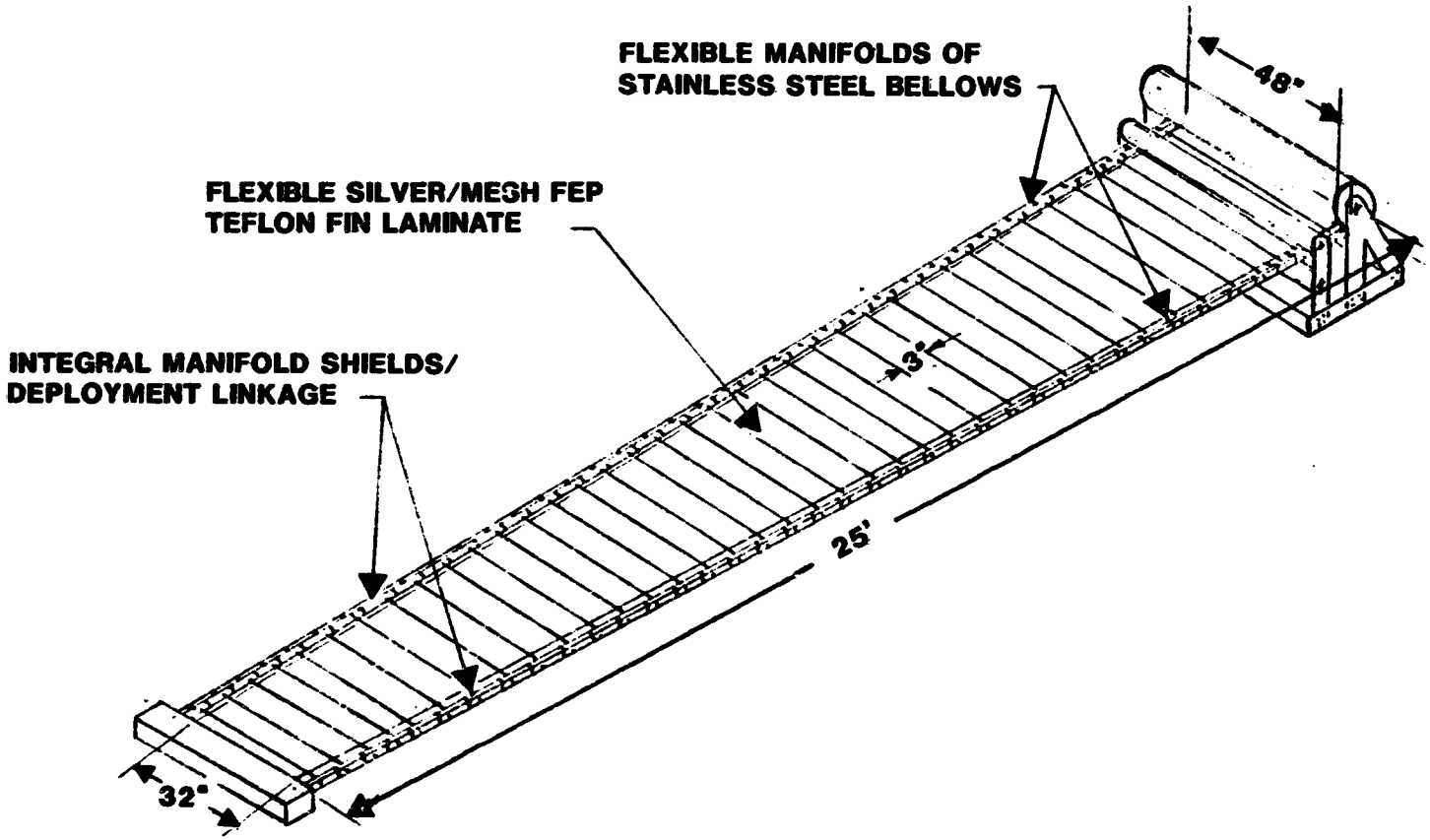

FIGURE 3-4 HARD TUBE FLEXIBLE RADIATOR TEST ARTICLE

ORIGINAL PAGE IS
OF POOR QUALITY

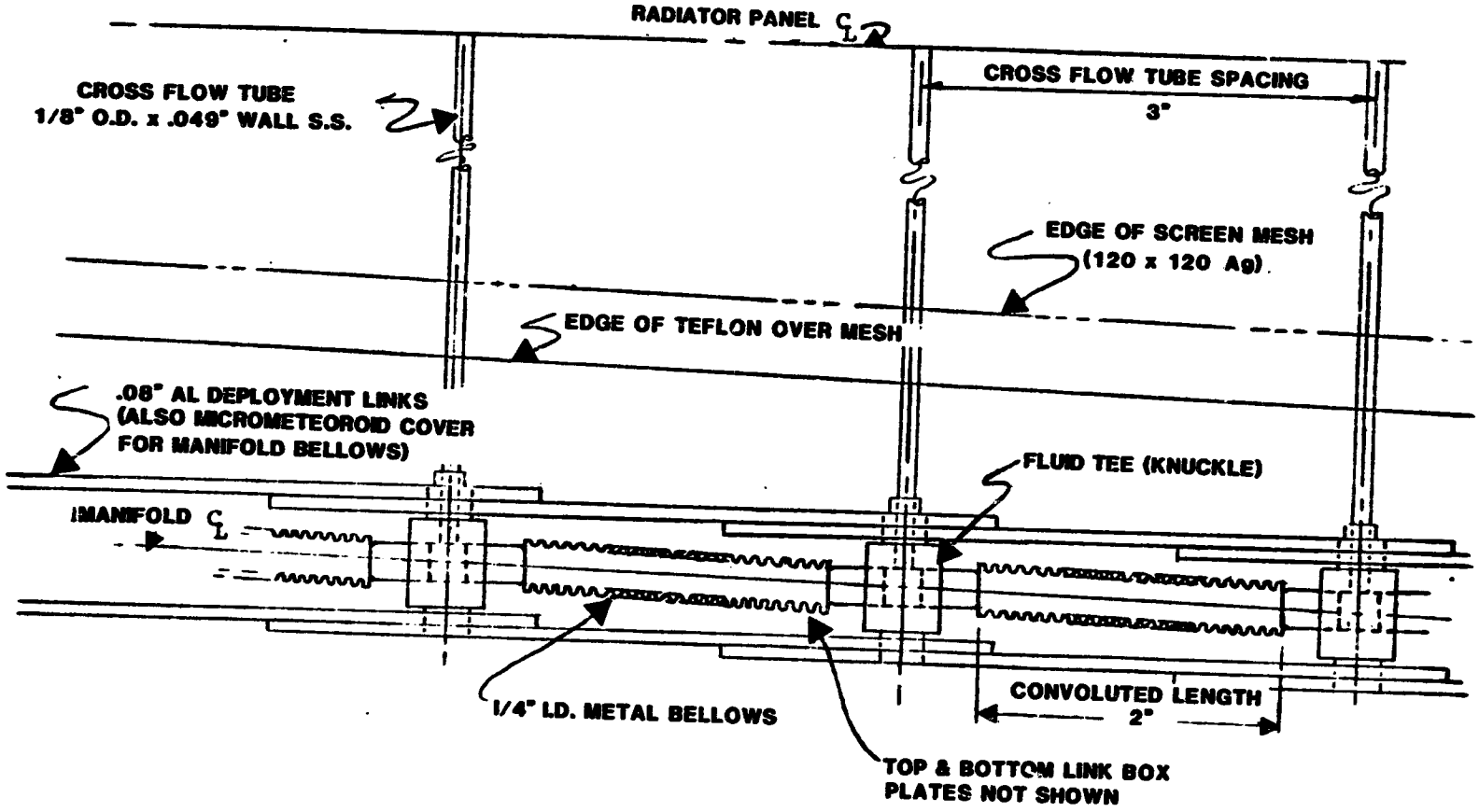

FIGURE 3-5 RADIATOR PANEL DETAILS - HARD TUBE RADIATOR

ORIGINAL PAGE IS
OF POOR QUALITY

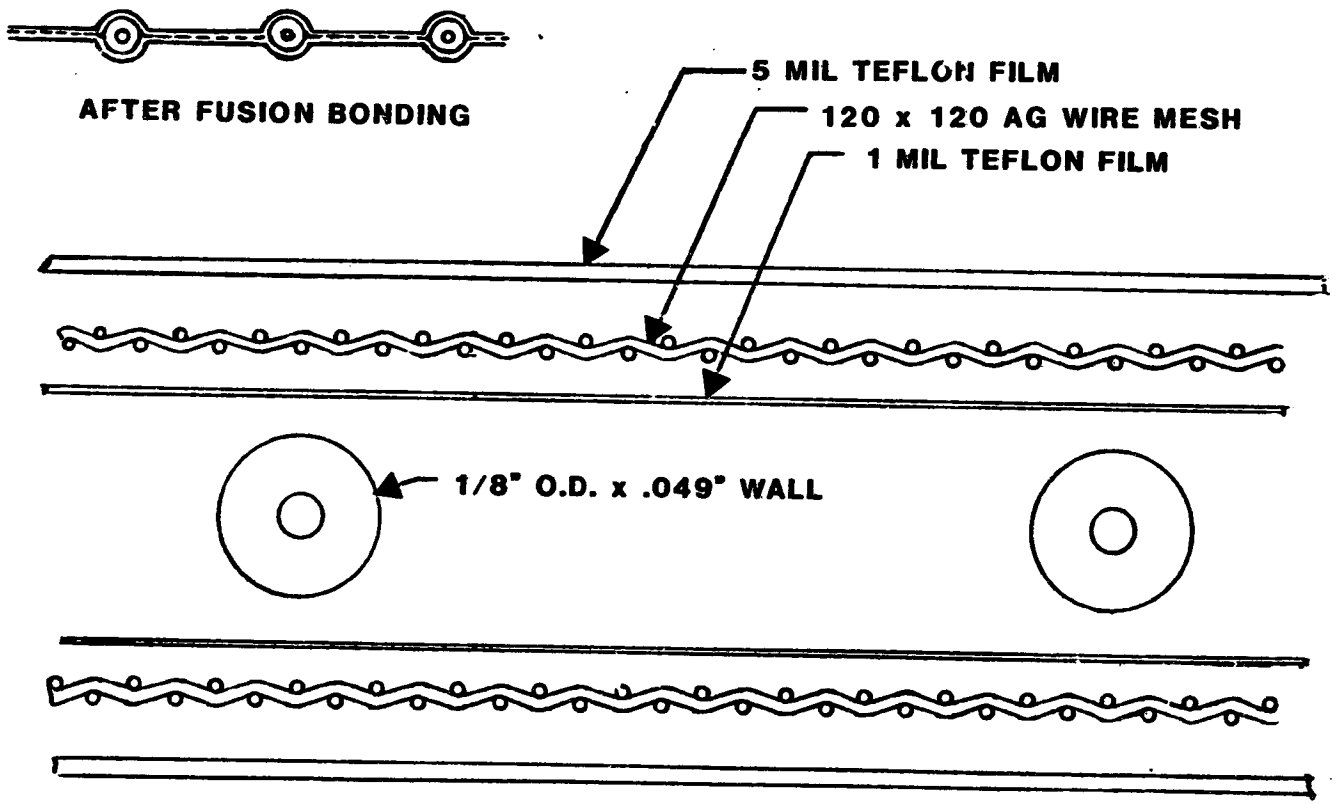

FIGURE 3-6 FLEXIBLE FIN LAYUP - HARD TUBE RADIATOR

ORIGINAL PAGE IS
OF POOR QUALITY

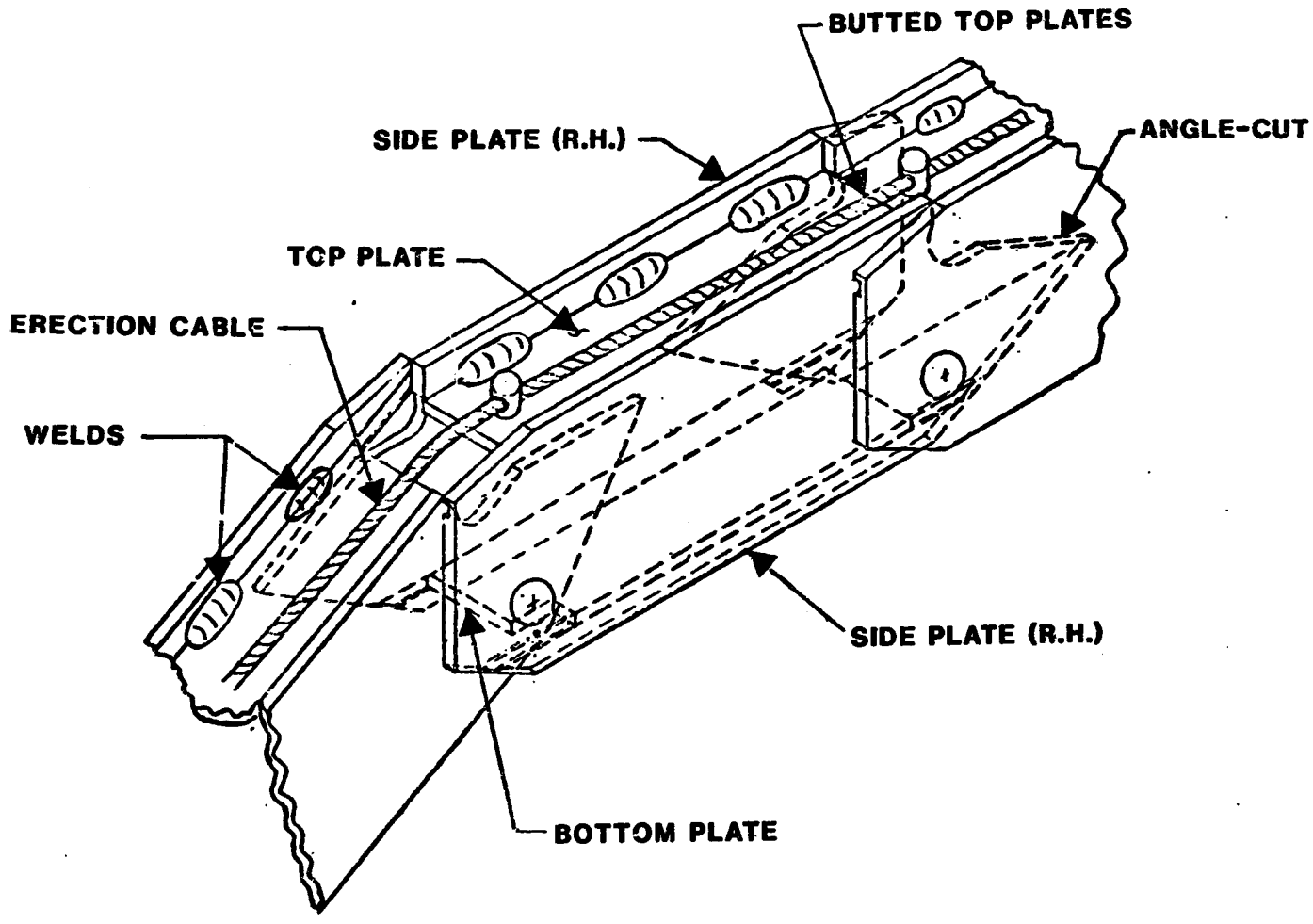

FIGURE 3-7 HARD TUBE RADIATOR ERECTION LINKAGE

brake to insure a smooth retraction.

A summary of the important design parameters for the hard tube flexible radiator is given in Table 3-2. The parameters represent the optimum hard tube flexible design which meets the requirements of rejecting 1.1 kW of heat to a $0^{\circ}F$ sink temperature with $100^{\circ}F$ inlet and $40^{\circ}F$ outlet.

TABLE 3-2

HARD TUBE FLEXIBLE RADIATOR PARAMETERS

Coolant Fluid	Freon 21
Radiator Panel Length	25'
Radiator Panel Area	83.3 Ft^2
Radiator Panel Width	32 to 48"
Number of Tubes	101
Tube Spacing	3"
Tube Outside Diameter	0.125"
Tube Inside Diameter	0.027"
Pressure Drop	36 psi
Radiator Fin Emittance	0.71
Radiator Panel Absorptance (SOLAR)	0.22
Radiator Fin Efficiency	0.725

4.0 TEST CONFIGURATION

Both radiator panels with supporting hardware were installed in the NASA/JSC SESL Chamber A in the general arrangement shown in Figure 4-1. The panels were mounted in such a way that when deployed the flat side of the radiators were parallel to the vacuum chamber floor. Both panels have to be supported along their lengths whenever they are deployed in one-g. NASA/SETD designed and fabricated the table-like structures to support the panels when deployed. These support structures are shown in Figures 4-2 and 4-2.

4.1 TEST SUPPORT HARDWARE

The soft tube radiator panel employs GN_2 as a pressurant to inflate tubes attached to the sides of the panel. A GN_2 supply reservoir (K-bottle) was located outside the chamber and connected through two regulators and past a solenoid dump valve to the soft tube radiator inflation tubes. The first regulator (installed on the K-bottle) dropped the GN_2 pressure to approximately 40 psig. The second regulator was also located outside the vacuum chamber but referenced to chamber pressure. Control of the second regulator is critical in preventing over-pressurization of the inflation tubes which should be limited to a 10 psi (maximum) difference above the surrounding pressure. A solenoid valve installed at the split-off to the inflation tubes was opened during panel retraction to deflate the inflation tubes (see Figure 4-4). The actual panel retraction operation involved securing the GN_2 supply and opening the solenoid valve to dump the GN_2 in the inflation tubes into vacuum chamber. No chamber operation or test article problems were encountered due to the GN_2 being dumped into the chamber during the soft tube panel retraction.

Transport flow to the radiators was conditioned and supplied by a flow bench arrangement shown in Figure 4-5. The soft tube radiator used glycol/water which was heated by the F-21 flow bench which consisted of pump, chiller and heater carts. As would be expected from a review of Figure 4-5, the soft tube radiator glycol/water was affected by temperature and flowrate changes made to the hard tube radiator inlet. Test point condition changes for the hard tube radiator were coordinated with the soft tube radiator testing to minimize interruptions and loss of test point conditioning time.

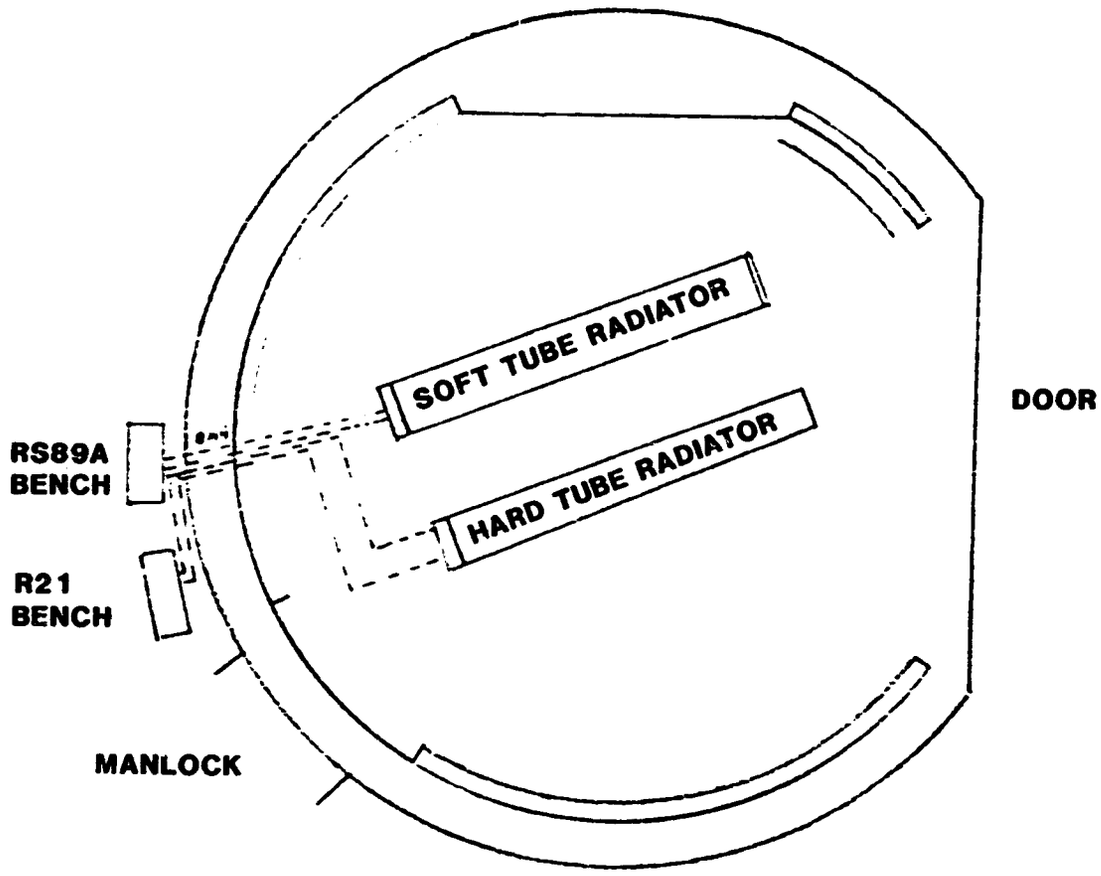

FIGURE 4-1 GENERAL TEST ARRANGEMENT

ORIGINAL PAGE IS
OF POOR QUALITY

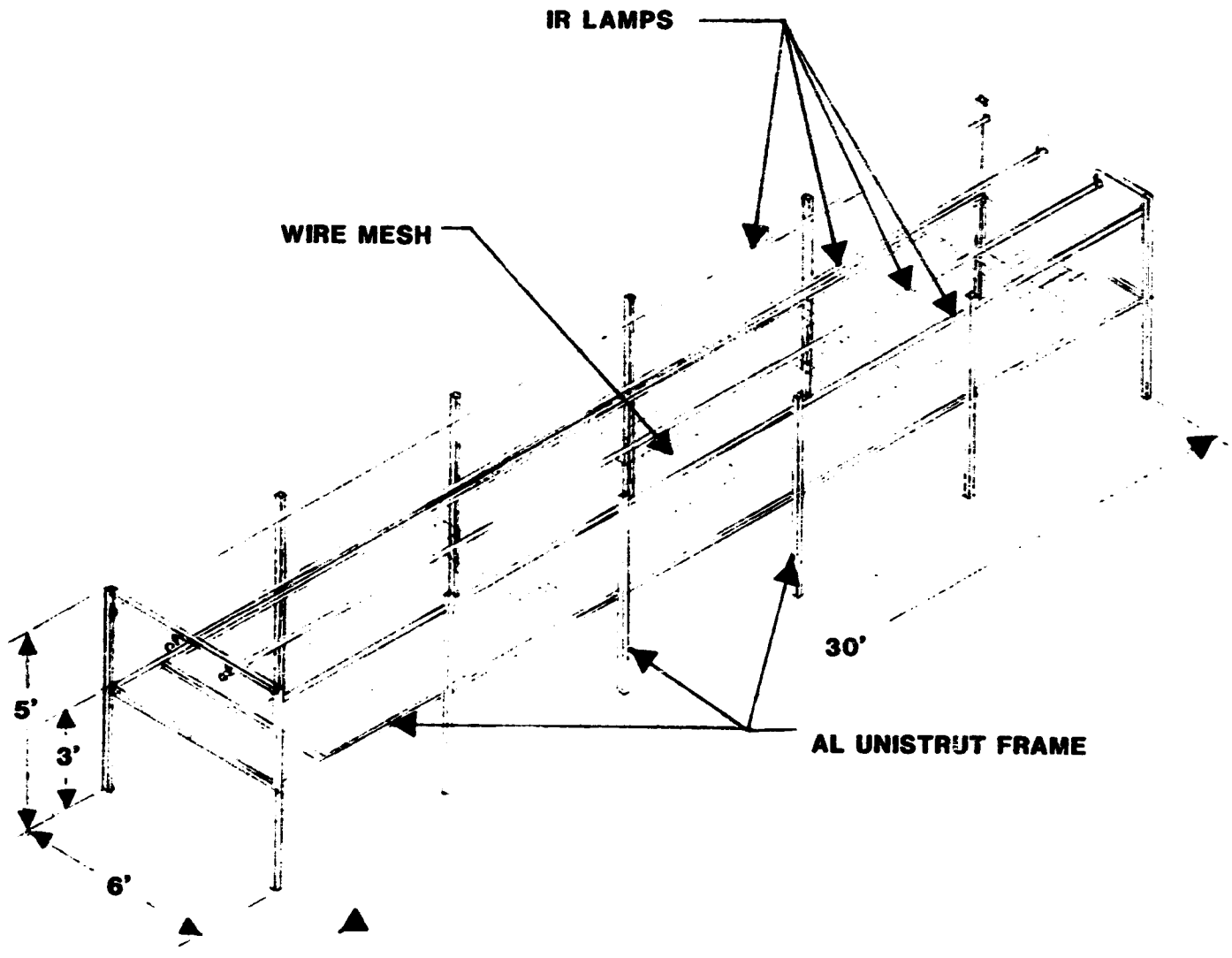

FIGURE 4-2 SOFT TUBE RADIATOR DEPLOYMENT TABLE

ORIGINAL PAGE IS
OF POOR QUALITY

ORIGINAL PAGE IS
OF POOR QUALITY

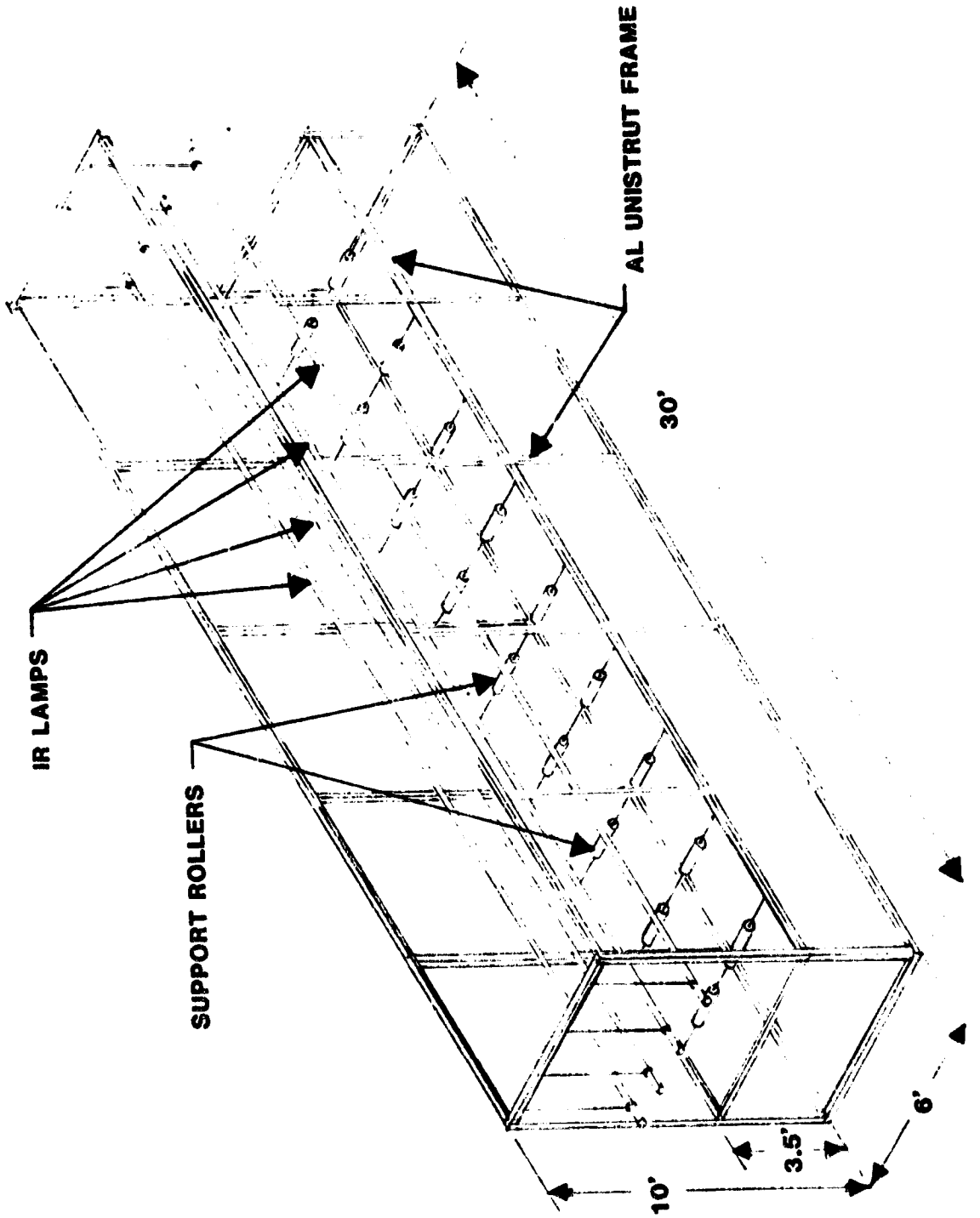

FIGURE 4-3 HARD TUBE RADIATOR DEPLOYMENT TABLE

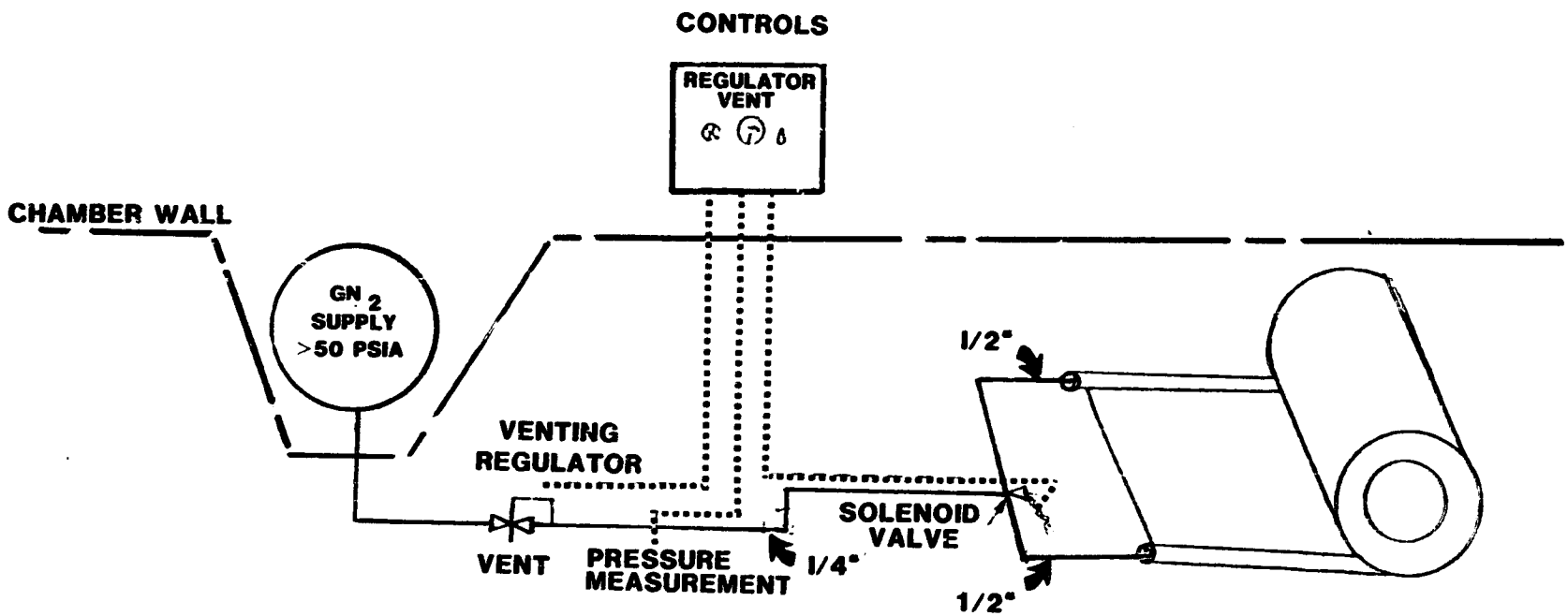

VENTS TO ATMOSPHERE DURING AMBIENT TEST' TO VACUUM DURING VACUUM TESTING

REGULATED PRESSURE - 0 TO 10 PSIG REFERENCED TO VACUUM CHAMBER
PRESSURE MEASUREMENT - 0 TO 50 PSIA ±.1 PSIA

FIGURE 4-4 GN_2 PRESSURIZATION SYSTEM

ORIGINAL PAGE IS
OF POOR QUALITY

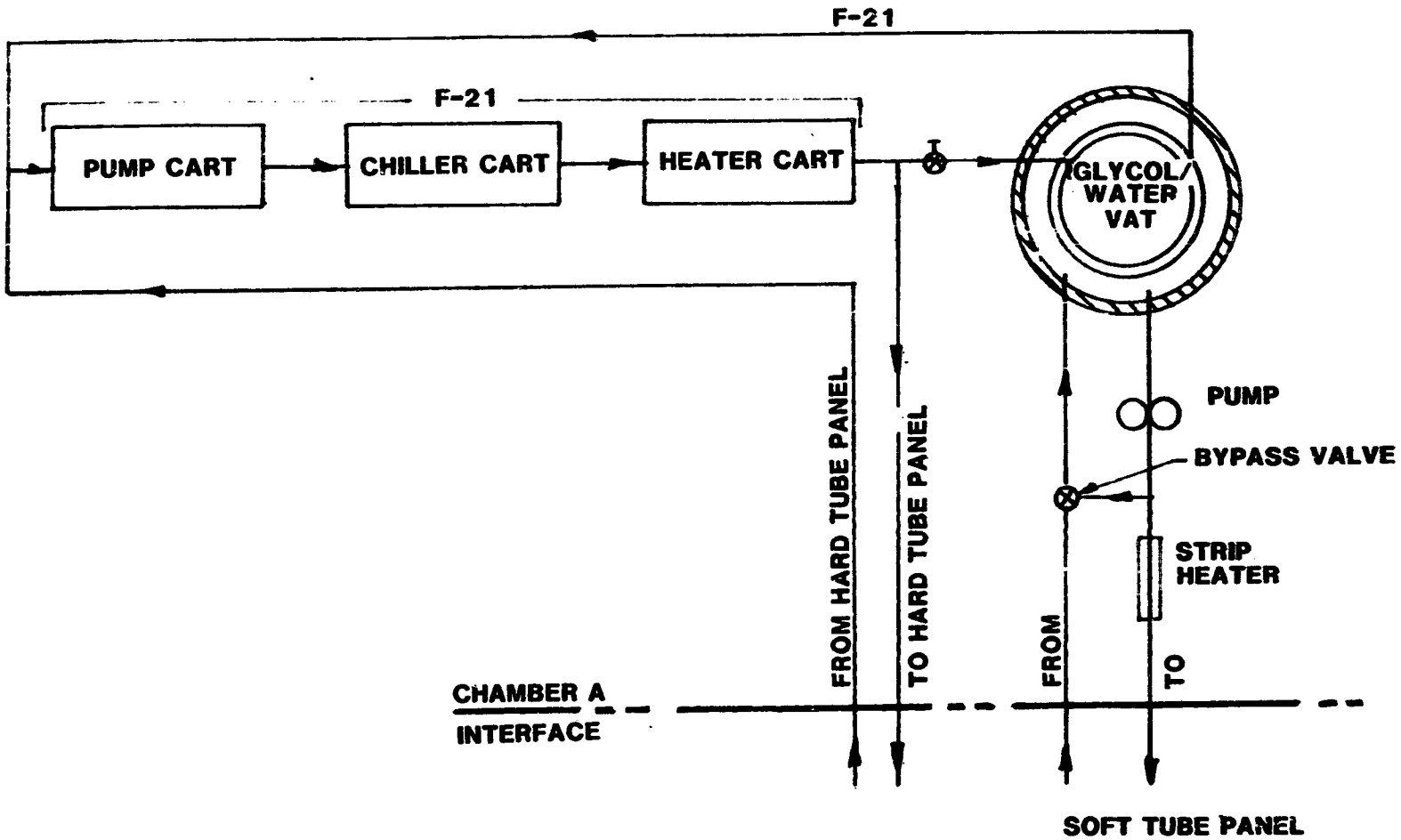

FIGURE 4-5 FLEXIBLE RADIATOR TEST FLUID SCHEMATIC

ORIGINAL PAGE IS
OF POOR QUALITY

ORIGINAL PAGE IS
OF POOR QUALITY

4.2 RADIATOR PANEL INSTRUMENTATION

The radiator panels were instrumented to obtain thermal performance data consistent with achieving the stated test objectives. Each radiator panel had fifty (36 gauge) thermocouples integrated with the particular panel deployment system to allow free and unrestricted panel deployment and retraction. The soft tube radiator was also equipped with redundant immersion thermocouples at the transport fluid inlet and outlet manifold ports. The panel thermocouples (50 per panel) and the four immersion thermocouples were delivered with the radiator panels (Figure 4-6). NASA provided and installed all additional instrumentation and connecting cables. This additional instrumentation consisted of:

1) Inlet Pressure Transducer - one at each panel inlet port
2) Delta Pressure Transducer - one across each panel's inlet and outlet port
3) Platinum Probe Thermistors - one at inlet and outlet ports (two per radiator panel)
4) Flow Meters - one per transport fluid loop, outside the vacuum chamber
5) Immersion Thermocouples - on flow bench for monitoring F-21 flow conditioning
6) Thermocouples - on chamber walls, floor, test support structure, deployment motor, and screwjack motor
7) IR Radiometers - twelve per panel

All the test data was processed through the NASA/SETD FLEX data system. The data was processed real-time and displayed on CRT's throughout the testing. Hard copies (called SCOOPS) of all processed data items were obtained at regular intervals and at various other specified times as conditions warranted. In addition, all the test data was recorded on magnetic tape for post-test plotting and analysis.

To record the data/information to make the various qualitative assessments concerning the radiators, NASA installed three, in-chamber movie cameras. Each camera had 'pan' and 'zoom' capabilities. Approximately one hour of video information was recorded for permanent retention.

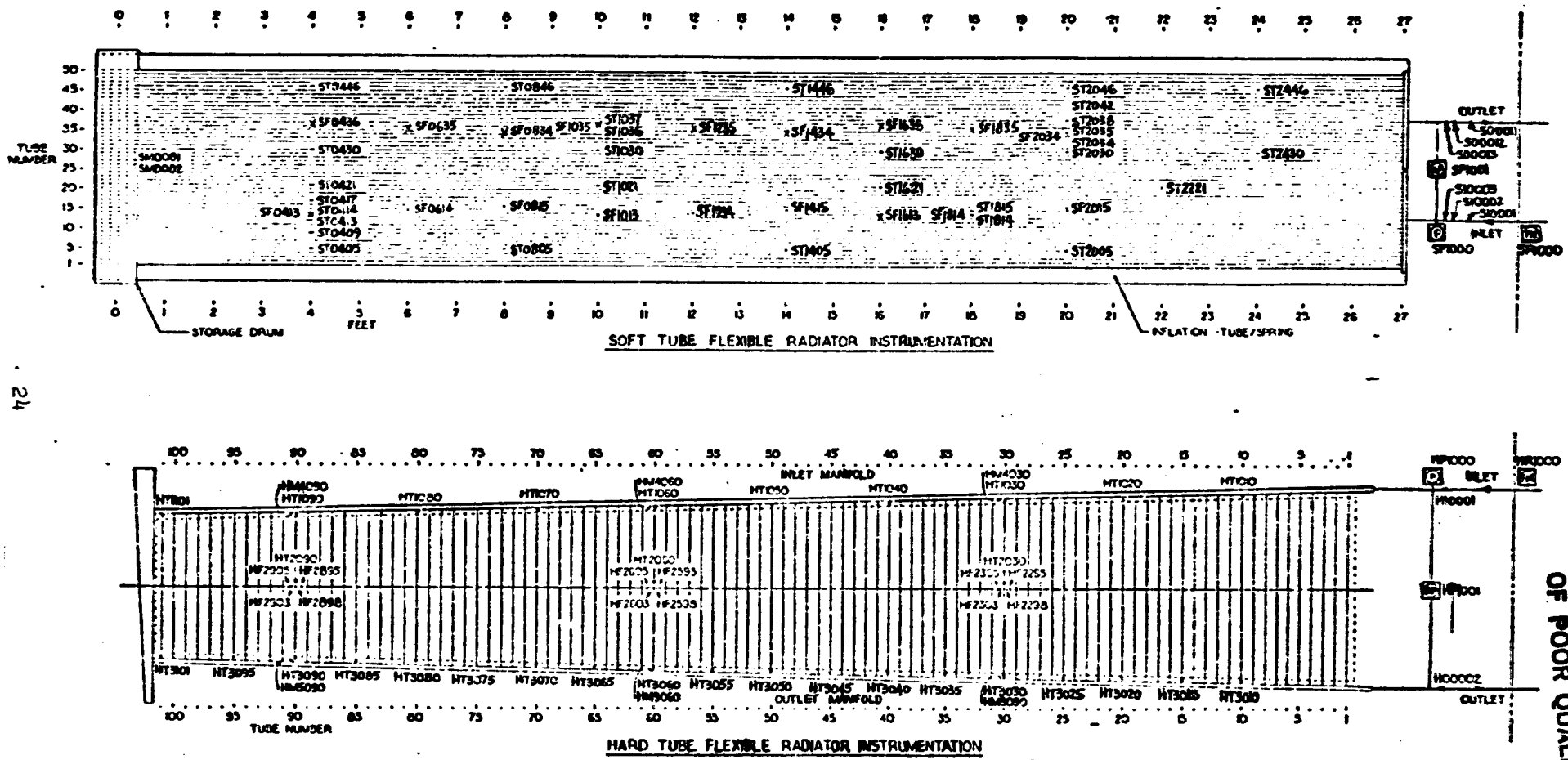

FIGURE 4-6 INSTRUMENTATION LAYOUT

ORIGINAL PAGE IS OF POOR QUALITY

4.3 FREON 21 SAFETY CONSIDERATIONS

The toxic nature of Freon 21 is widely reported and since the hard tube radiator used Freon 21 as the heat transport fluid, appropriate procedures were established to safe guard personnel. The Freon 21 flow bench and test article were estimated to contain 500 pounds of Freon 21. Since the flow bench was pressure and leak checked at approximately 2.5 times the operating pressure, the test article was assumed to offer the greatest potential for a Freon 21 leak. If such a leak had occurred, sensors positioned at the inlet to the diffusion pumps would have alerted test personnel. Test article pressures were strictly controlled from exceeding verifiable safe limits.

Before test personnel were allowed in the vacuum chamber after a repress, an assigned safety monitor entered the chamber to test the Freon 21 concentration level. After the first two chamber repressurizations, concentration levels of 6-7 parts per million (ppm) were detected in the chamber. After the latter repressurizations concentration levels were lower, approximately 2 ppm. This apparent improvement is believed to be due to instrumentation accuracy because no fluid system repairs were made after the initiation of testing. The area around the Freon 21 flow bench (outside the chamber) was monitored throughout the test for F-21 concentration level.

ORIGINAL PAGE IS
OF POOR QUALITY

5.0 TEST RESULTS

Thermal vacuum testing was accomplished to evaluate the thermal and hydraulic performance and to demonstrate and evaluate the deployment/retraction systems for each of the two radiator designs: the soft tube radiator and the hard tube radiator. The soft tube radiator results are discussed in Section 5.1 below; the hard tube radiator results are discussed in Section 5.2.

5.1 SOFT TUBE RADIATOR PANEL

The performance parameters to be verified by testing the soft tube radiator panel were panel heat rejection, panel fin effectiveness, and panel pressure drop. The design conditions for heat rejection were 4500 BTU/hr of rejection to a $0^{\circ}F$ sink temperature while flowing 100 pounds per hour of a eutectic mixture of glycol/water (62.5% Glycol/37.5% water) with the fluid temperatures being $100^{\circ}F$ inlet and $40^{\circ}F$ outlet. In addition, parametric heat rejection performance data was desired over a range of flowrates, inlet temperatures and sink temperatures. The design value for radiation fin effectiveness for the flexible fin laminate is 0.94. The panel pressure drop at design conditions (100 LB/HR, $100^{\circ}F$ in and $40^{\circ}F$ out) with Glycol/water is estimated to be 39 psi. The test results to evaluate the above parameters and the deployment/retraction system are discussed below.

5.1.1 Soft Tube Heat Rejection Evaluation

The heat rejection data from the test were obtained from the transport fluid heat loss, using measured fluid inlet temperature, outlet temperature and flowrate, i.e.

$$Q_{rej} = \dot{m}\, Cp\, (T_{in} - T_{out})$$

where:

Q_{rej} = heat rejection (calculated)

$\dot{m}$ = mass flowrate (measured)

Cp = mean specific heat (known from temperature)

T_{in} = inlet fluid temperature (measured)

T_{out} = outlet fluid temperature (measured)

Tables 5-1 and 5-2 summarize the test points for the soft tube radiator for the two weeks of testing. Shown are the test times, test point designation, measured values of Glycol/water flowrates, inlet temperatures, outlet temperatures, and the heat rejection values derived from this measured data.

ORIGINAL PAGE IS
OF POOR QUALITY

Predictions were made for comparison purposes for each of the test points shown in Table 5-1 and 5-2 using a radiator analysis program written for use on the TI 59 programmable calculator. The analysis program progressively solves for the temperatures for a number of panel elements by an iterative process using the following equations.

$$T_i = T_s + (T_{i-1} - T_s)\, e^{-\left(\frac{hP\ hrW}{hP + hrW}\right)\left(\frac{\Delta X}{\dot{m}Cp}\right)}$$

$$hr = \sigma\varepsilon\eta\,(\bar{T}_{bi}^{\,2} + T_s^{\,2})\,(\bar{T}_{bi} + T_s)$$

$$\bar{T}_{bi} = T_s + \frac{hP(T_{i-1} - T_s)}{hP + hrW}\, e^{-\frac{hP\ hrW}{hP + hrW}\left(\frac{\Delta X}{2\dot{m}Cp}\right)}$$

where:

T_i = the fluid temperature leaving element i

T_s = radiation sink temperature

h = fluid-to-tube heat transfer coefficient

P = area of heat transfer for h per unit length (wetted perimeter)

hr = radiation heat transfer coefficient between panel and sink temperature

W = panel width

$\dot{m}$ = mass flowrate of fluid

Cp = specific heat of fluid

ΔX = flow length for each element

ε = panel emissivity

η = panel fin effectiveness

$\bar{T}_{bi}$ = the mean radiation temperature for element i

The set of equations is solved iteratively for each of the elements of the panel, starting at the fluid inlet end and progressing to the outlet. (The number of elements for the panel is input and must be between 1 and 20, inclusive. Ten elements were used for the test analysis.)

Values input into the analysis were as follows:

h = 51.39 BTU/hr-ft^2-$^\circ$F

WP = .409 Ft

ORIGINAL PAGE IS
OF POOR QUALITY

TABLE 5-1

SOFT TUBE PERFORMANCE TEST SUMMARY FOR FIRST WEEK

TIME D:H:M	TP NO.	DEP CD	WDOT PPH	T_{IN} °F	T_{OUT} °F	PIN PSIA	DP PSI	TS °F	TEST Q_{REJ} B/H	PREL Q_{REJ} B/H	PRED T_{OUT} °F	REQ'D TO MATCH TS °F	REQ'D TO MATCH ΔQ_{AES} BTU/HR-FT^2
(2) 262:09:16	108A	1 (3)	151.4	126.7	106.7	86.7	-	24	2348	2936	101.7	50	15.5
10:19	108B	1	180.4	129.5	98.1	69.0	-	-33	4357	4148	99.6	-48	-5.4
11:05	108C	1	182.4	132.6	104.9	67.1	US (1)	24	3927	3226	109.8	-12	-16.7
11:58	109	1	98.0	133.5	90.0	48.0	US	23	3279	2919	94.8	3	-9.7
12:33	110	1	101.3	109.2	79.2	56.7	US	22	2307	2227	80.2	18	-2.0
16:39	111A	1	99.6	60.9	43.0	99.9	-	19	1293	963	47.6	2	-8.1
				IR LAMP CALIBRATION TO TSINK = 0°F									
21:45	111B	1	93.2	61.1	48.5	91.6	-	4	855	1245	42.7	24	10.3
262:23:59	121	3	97.9	103.2	48.7	79.7	-	- 2	3980	4959	35.3	23	12.7
263:02:03	122	3	114.8	129.6	60.6	68.4	US	0	6004	6810	51.3	20	10.1
02:48	123	3	196.9	128.2	79.3	84.2	-	0	7357	8231	73.5	19	9.6
03:26	124	3	53.0	139.2	39.4	54.7	US	- 2	3990	4779	19.6	25	13.8
04:47	125	3	110.8	80.8	40.9	98.8	-	- 3	3239	4045	30.9	16	9.4
06:00	126	3	156.5	82.1	48.1	-	-	- 3	3925	4693	41.5	14	8.3
10:59	113	2	57.5	80.2	37.8	68.6	-	4	1820	2207	28.8	19	7.6
12:00	115	2	98.4	101.8	59.4	68.4	-	4	3132	3626	52.7	21	8.7
263:12:57	114	2	49.2	99.3	46.0	51.7	US	5	1902	2514	28.8	30	13.2

(1) US = UP SCALE = VALUE CALIBRATION CURVE

(2) DAY 262 - 18 SEPT 1980

(3) DEPLOYMENT CODE

0 = RETRACTED
1 = 1/3 DEPLOYED
2 = 2/3 DEPLOYED
3 = FULLY DEPLOYED

ORIGINAL PAGE IS
OF POOR QUALITY

TABLE 5-2

SOFT TUBE PERFORMANCE TEST SUMMARY FOR SECOND WEEK

TIME D:H:M	TP NO.	DEP CD	WDOT PPH	T_{IN} °F	T_{OUT} °F	PIN PSIA	DP PSI	TS °F	TEST Q_{REJ} B/H	PRED Q_{REJ} B/H	PRED T_{OUT} °F	REQ'D TO MATCH TS °F	REQ'D TO MATCH ΔQ_{ABS} BTU/HR·FT^2
(3) 273:07:22	101-2	0(4)	218.0	100.4	92.5	99.6	82.8	C/W(2)	1313	1382	92.1	-138	5.6
11:28	102-2	1	162.4	99.5	58.7	97.9	80.8	C/W	4953	4358	63.6	-460	-7.5
15:50	105-2	0	150.9	101.5	89.5	75.2	58.0	C/W	1377	1376	89.5	-180	0.0
17:00	106-2	0	49.9	100.2	74.8	44.4	27.2	C/W	953	1251	66.9	- 50	26.9
20:09	103-2	0	306.4	141.8	133.6	98.2	81.1	C/W	1993	1793	134.4	-400	-7.5
273:21:45	112-2	0	244.6	140.2	80.2	US(1)	85.0	C/W	11293	10084	86.6	-460	-7.5
274:07:48						IR LAMP CALIBRATION TO TSINK = 0°F							
13:10	116-2	3	102.7	141.6	57.3	67.7	49.0	4	6594	6953	52.6	14	5.02
15:06	117-2	3	203.5	137.9	84.8	87.6	69.1	4	8294	8801	81.5	15	5.54
17:15	120-2	3	257.4	139.8	94.1	98.7	80.3	1	9109	9706	91.1	13	5.95
20:10	136-2	2	202.3	141.3	99.8	79.6	61.8	-3	6525	6775	97.8	5	3.82
22:03	137-2	2	104.1	140.7	78.4	57.8	39.9	-2	4982	5579	71.1	19	10.52
274:23:50	138-2	1	99.5	143.3	102.7	48.2	30.2	-2	3145	3634	96.2	26	14.3
275:00:52	139-2	1	201.5	138.3	115.3	75.0	56.9	0	3628	3920	113.5	15	7.5
07:03	129-2	3	100.5	119.8	66.8	70.3	51.7	25	4032	4841	56.1	44	11.2
08:17	130-2	3	203.5	120.4	85.3	94.7	76.1	25	5485	6446	79.1	43	10.6
11:10	131-2	3	243.5	129.8	93.2	US	81.0	25	6854	7540	89.5	37	6.9
12:33	132-2	2	204.5	133.3	100.6	82.9	64.7	25	5174	5408	99.1	32	4.0
14:10	133-2	2	99.1	129.8	79.2	58.5	40.3	25	3846	4215	74.3	37	6.9
17:35	134-2	1	99.6	130.2	98.0	51.3	33.1	25	2474	2670	94.3	39	8.1
18:25	135-2	1	197.9	130.0	110.6	78.4	60.4	25	2990	3104	109.9	30	2.8
20:40	140-2	1	203.2	129.1	89.4	89.8	71.8	C/W	6199	5421	94.4	-460	-7.5
21:47	141-2	1	151.0	130.1	79.5	75.1	57.2	C/W	5833	5442	84.5	-460	-7.5
275:23:09	142-2	1	186.0	100.4	79.0	99.9	81.4	0	3015	2592	82.0	- 25	-10.9
276:13:35	150-2	0	196.4	102.3	92.5	98.0	79.8	C/W	1458	1396	92.9	-250	-5.1
276:15:01	151-2	0	151.4	128.6	113.6	64.7	46.8	C/W	1752	1651	114.5	-460	-7.5

(1) US = UP SCALE

(2) C/W = COLD WALL ENVIRONMENT (ASSUMED -180°F)

(3) DAY 273 - 29 SEPT 1980

(4) DEPLOYMENT CODE

0 = RETRACTED
1 = 1/3 DEPLOYED
2 = 2/3 DEPLOYED
3 = FULLY DEPLOYED

ORIGINAL PAGE IS
OF POOR QUALITY

C_p = .73 to .79 BTU/lb-°F depending upon the temperature
= .77 BTU-lb-°F for the parametric analysis
W = 3.18 Ft^2/Ft
σ = $.1714 \times 10^{-8}$ BTU/hr-°F^4-Ft^2
η = .943
$\Sigma \Delta X$ = 54.5 Ft (flow length)
ε = .71 for no blockage of radiation
= .66 for 5.5% blockage of radiation
= .61 for 13% blockage of radiation
n = 10 number of panel elements

The predictions from this analysis were correlated with predictions using the SINDA/SINFLO computer routine for Test Points 116-2, 117-2, & 120-2 before analyzing the remaining conditions. Table 5-3 shows this correlation. The SINDA/SINFLO model and analysis are discussed in Section 5.1.4.

TABLE 5-3

COMPARISON OF TI59 MODEL WITH SINDA/SINFLO MODEL

TEST POINT	$\dot{w}$ (LB/HR)	T_{IN} (°F)	OUTLET TEMPERATURE TEST (°F)	SINDA/SINFLO (°F)	TI59 (°F)
116-2	102.7	141.6	57.3	51.5	52.6
117-2	203.5	137.9	84.8	80.8	81.5
118-2	252.4	129.8	94.1	89.7	91.1

The predicted heat rejection for each test point is shown in Tables 5-1 and 5-2 for comparison with those observed. Also shown are the environments required for the analysis to match; i.e. the sink temperature and the additional absorbed heat. This required delta in absorbed heat could be the result of radiation and reflection of radiant energy from the surrounding surfaces. These include the inflation tubes, the end plate, the storage drum and the table. The calculated radiation form factors from the radiator to each of these items are shown in Table 5-4.

TABLE 5-4

RADIATION FORM FACTORS FOR SOFT TUBE RADIATOR TEST

ITEM	FORM FACTOR FROM RADIATOR TO ITEM, F_{12}
Inflation Tube	.046
End Plate	.002
Storage Drum	.007
Table	.076
Total	.131

These form factors were used to estimate the blockage of radiation from the radiator to the chamber wall (simulated space).

The results shown in Tables 5-1 and 5-2 indicate that a correlation between predictions and test results can be obtained if the sink temperatures are increased for high thermal environment conditions. The additional heat flux required is approximately 5 to 10 BTU/hr-ft^2 with an average of approximately 7 BTU/hr-ft^2 required. This results in a equivalent sink temperature of 15°F for the 0°F sink test cases.

Figures 5-1 thru 5-3 show the predicted performance maps for the soft tube flexible radiator along with data points from the test for comparison purposes. Figure 5-1 shows the comparison for a fluid inlet temperature of 100°F and sink temperature of 0°F (design conditions). Predictions are shown for a range of flowrates, a range of deployment fractions, and for different environment conditions. The predicted performance for the fully deployed panel at 0°F sink and 100 lb/hr flowrate is about 5000 BTU/hr for assumed blockage of 5.5% (inflation tubes, drum and end plate). Assuming blockage from the support table also (blockage of 13%) the performance is predicted to be 4800 BTU/hr, which is 300 BTU/hr higher than the design heat rejection of 4500 BTU/hr. However, for test point 121, which was very close to the design conditions, the performance was only measured to be 4000 BTU/hr. This lower-than-expected performance was prevalent for all the high environment testing (i.e., 0°F, and 25°F sink temperature). There are a number of candidate explanations possible for the

ORIGINAL PAGE IS
OF POOR QUALITY

FIGURE 5-1

SOFT TUBE FLEXIBLE RADIATOR PERFORMANCE WITH DESIGN ENVIRONMENT AND T_{IN} = 100°F

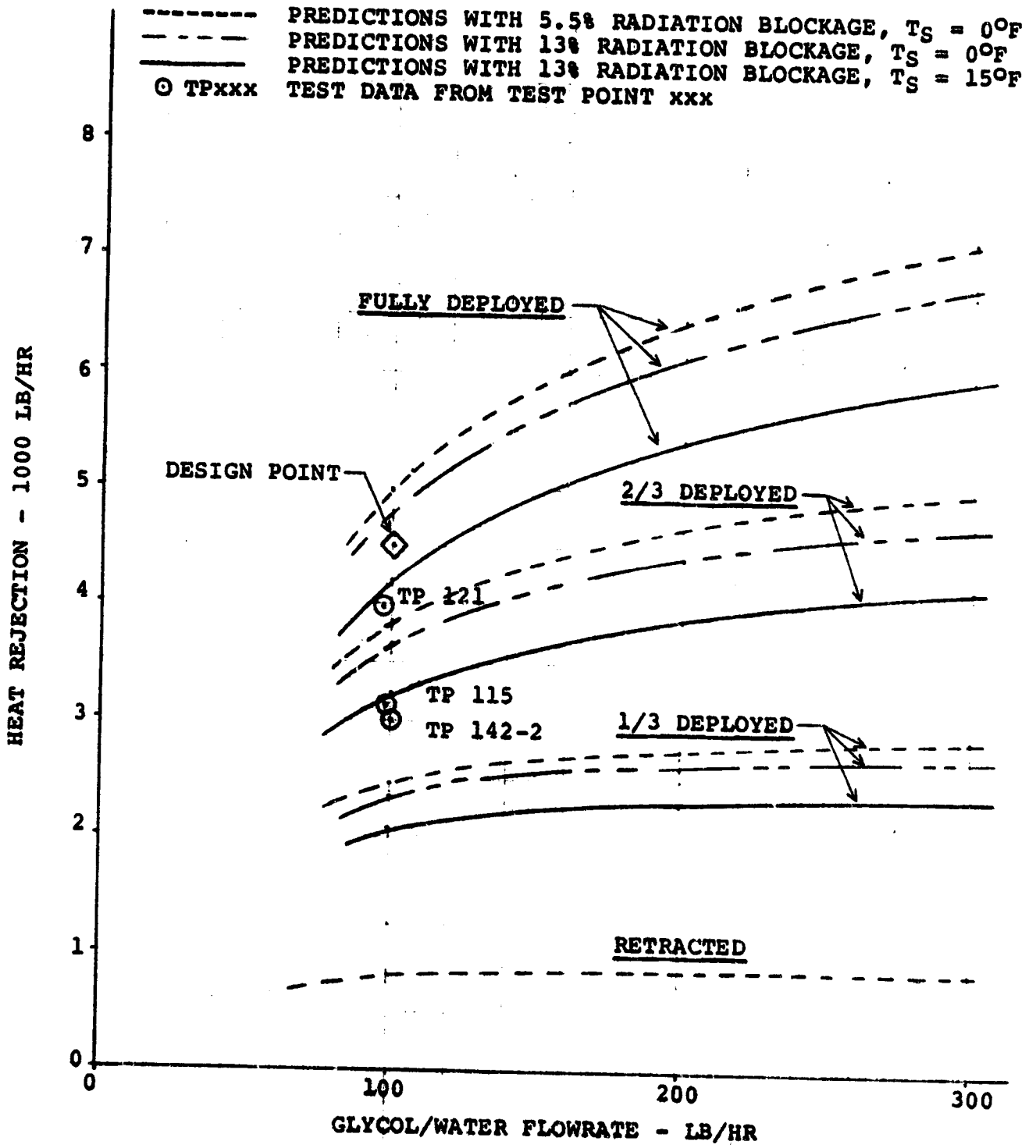

ORIGINAL PAGE IS
OF POOR QUALITY

FIGURE 5-2

SOFT TUBE FLEXIBLE RADIATOR PERFORMANCE WITH DESIGN ENVIRONMENT AND T_{IN} = 141°F

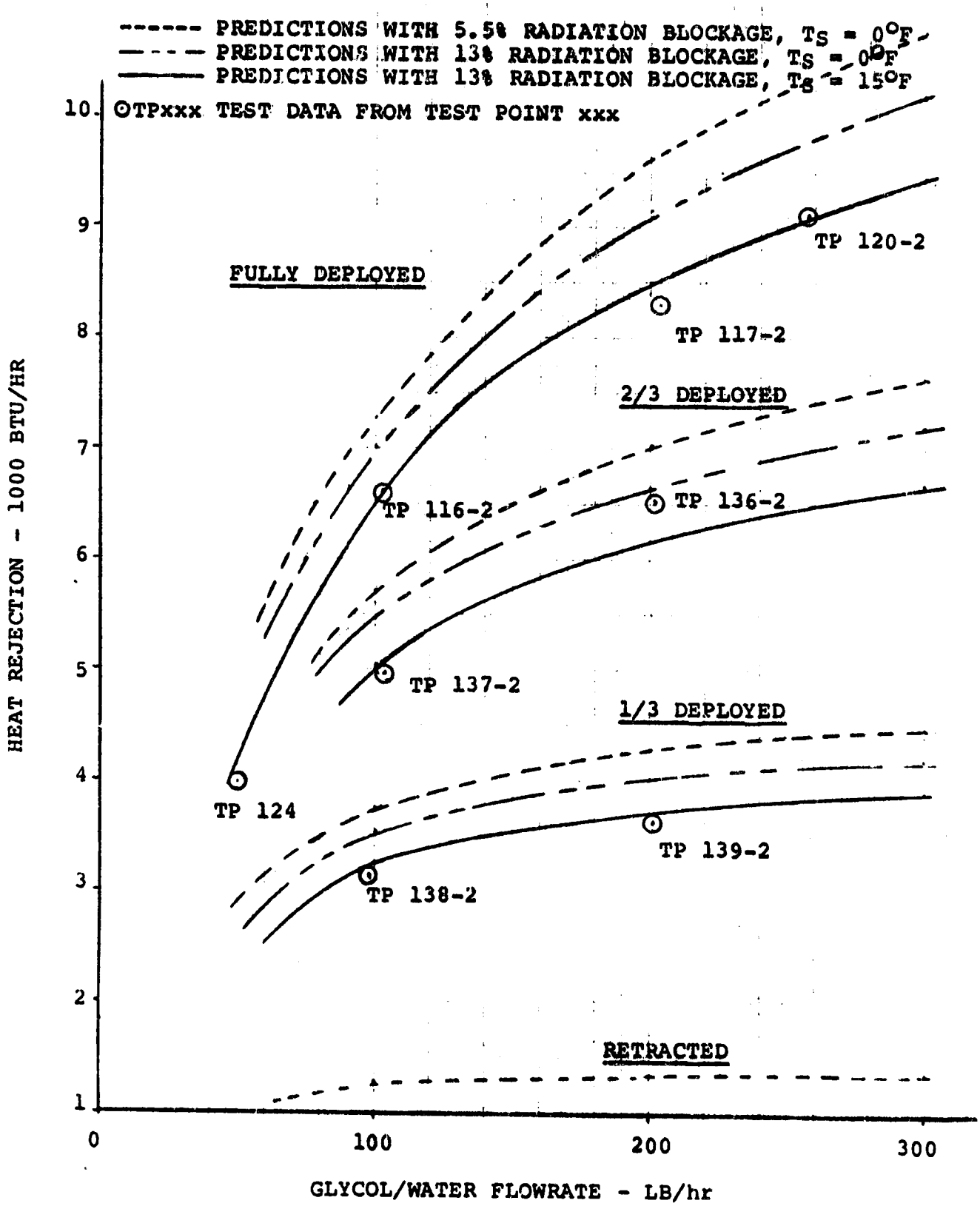

ORIGINAL PAGE IS
OF POOR QUALITY

FIGURE 5-3

SOFT TUBE FLEXIBLE RADIATOR PERFORMANCE WITH COLDWALL ENVIRONMENT (T_S = -180°F)

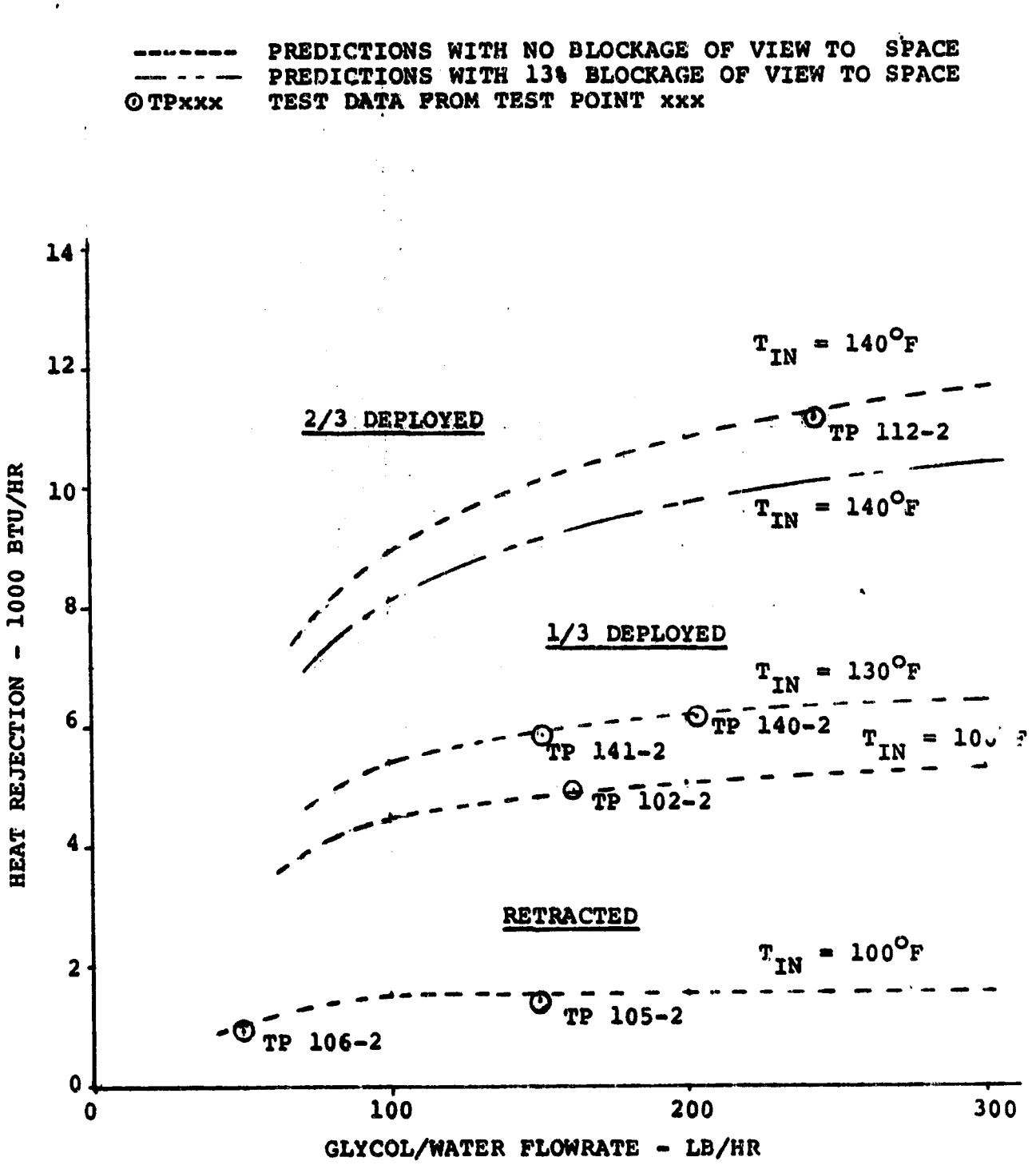

low performance. These include higher radiation environment than indicated, poor radiator panel fin effectiveness, poor flow distribution, instrumentation errors and heat gain or loss by the fluid manifolds and fluid lines. The environmental effects appear the most likely and was assumed for correlation purposes. There is some evidence of poor flow distribution in the tubes as discussed in Section 5.1.3. However, it is assumed the effect is small because of the good cold wall environment performance.

It was found that approximately 7 BTU/hr-ft^2 absorbed heat was required over and above the basic sink temperature to achieve a reasonable match of the test data. This represents a sink temperature increase of 15°F for the 0°F sink temperature cases and 13°F for the 25°F sink cases. The correlation is shown in Figures 5-1 and 5-2 for the high environment cases. The 15°F sink temperature seems to correlate reasonably well.

Figure 5-3 shows the performance predictions for the coldwall conditions and the test data points for comparison. It was found for this environment that the panel heat rejection was very high. The test data matches the analytical predictions when no blockage was assumed. This result tends to support the theory that the reduced performance at the higher environment conditions is due to higher-than-anticipated radiation environment. The results indicate that the panel performs well with the expected fin effectiveness and emittance.

Another test point that supports the hot environment theory is No. 142-2 shown on Figure 5-1. This test point indicated a much higher than predicted heat rejection for the 1/3 deployed condition. This is believed to be caused by testing at coldwall conditions which immediately preceeded this test point, lowering the support structure temperatures.

The results from analysis of the test data points to a radiator panel capable of rejecting heat in the quantities for which it was designed. The coldwall tests support this conclusion. The test data analysis also indicates that the environmental flux absorbed by the radiator panel exceeded the desired flux by an average of about 7 BTU/hr-ft^2.

5.1.2 Soft Tube Fin Effectiveness

The thermocouple instrumentation on the panel fin was used to estimate its fin effectiveness during the testing. Test points 116-2, 117-2, and 120-2 were evaluated at the four foot location (from the storage drum). The thermocouples evaluated at the four foot location were ST0413, tube 13,

SFO413, the fin midway between 13 and 14 and SFO414, tube 14. Figure 5-4 shows the temperature profiles plotted from the three thermocouples at the three test points.

An estimate was made for the radiating fin effectiveness using the methods of Lieblein*. Using this method, the thermal temperature ratio was calculated from the test data by

$$T_R = \frac{T_\ell - T_s}{T_o - T_s}$$

where: T_R = temperature ratio
T_ℓ = terminal temperature of fin
T_o = fin base temperature
T_S = equivalent sink temperature of environment

The equivalent sink temperature ratio was calculated from

$$T_{RS} = T_S/T_o$$

Based upon the items, the radiating fin effectiveness can be estimated from Figures 9 and 10 of Lieblein. Table 5-5 summarizes the results of the analysis. The average radiating fin effectiveness determined by this method was determined to be 0.935. This compares well with the design value of 0.943.

TABLE 5-5

RADIATING FIN EFFECTIVENESS ESTIMATES

TEST POINT	FROM TUBE 13	FROM TUBE 14	AVERAGE
116-2	.925	.945	.936
117-2	.925	.940	.933
120-2	.920	.940	.930
		AVERAGE EFFECTIVENESS	.935

*Lieblein, Seymour, "Analysis of Temperature Distribution and Radiant Heat Transfer Along a Rectangular Fin of Constant Thickness", NASA TN D-196, November 1959.

ORIGINAL PAGE IS
OF POOR QUALITY

FIGURE 5-4

SOFT TUBE RADIATOR FIN TEMPERATURES AT 4 FEET

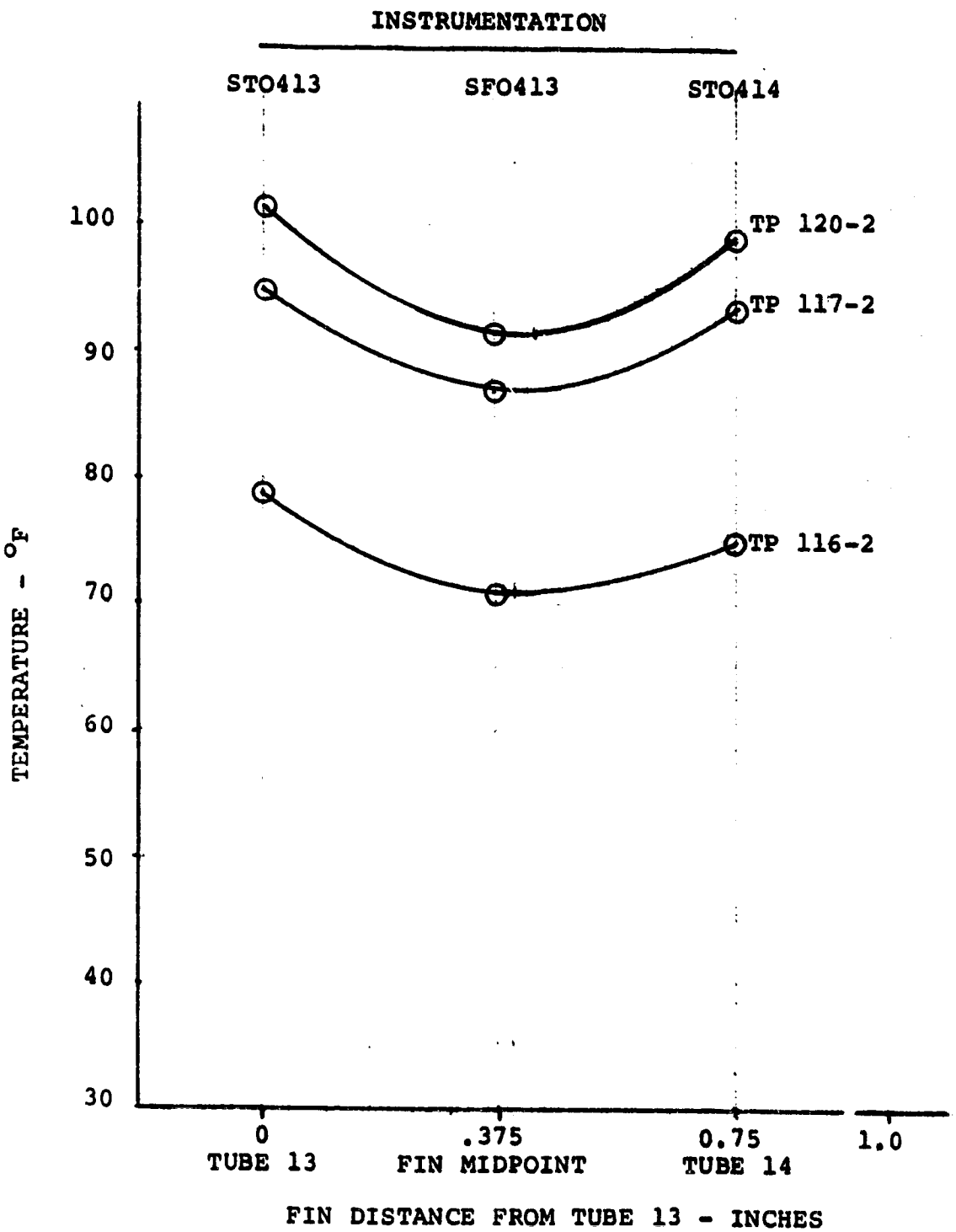

5.1.3 Soft Tube Radiator Flow/Pressure Drop Evaluation

The flowrate and pressure drop values measured in the soft tube radiator test are tabulated in Table 5-2. The pressure drop instrumentation was not working for the test of the first day, summarized in Table 5-1.

Analytical predictions were made for the radiator panel pressure drop vs flowrate at different fluid temperatures to help in test data evaluation. The equation for pressure drop in a tube was written; including entrance and exit losses in the .046 I.D., .44 inch long inserts. The equation reduces to the following when geometric terms are included:

$$\Delta P = 2.19 \frac{\mu}{\rho} \dot{m} + .00426 \frac{\dot{m}^2}{\rho}$$

where:

ΔP = pressure drop, psi

μ = viscosity, lb/ft-hr

ρ = density, lb/ft^3

$\dot{m}$ = panel flowrate, lb/hr

This equation was used to predict the panel pressure drop. Table 5-6 gives the property values used in the analysis.

TABLE 5-6

GLYCOL/WATER THERMAL PROPERTIES USED IN ANALYSES

TEMPERATURE °F	VELOCITY LB/FT-HR	DENSITY LB/FT^3
70	12	67.2
100	7.25	66.5
120	5.81	66.1

The analysis results are summarized in Figure 5-5, along with test data for similar conditions. Comparison of the analysis and test data shows the test pressure drops higher than the predictions by about 55 to 65%. At the design conditions of 100 lb/hr, and an average temperature of 70°F (100°F inlet, 40°F outlet), the predicted pressure drop was 39.1 psi while

ORIGINAL PAGE IS
OF POOR QUALITY

FIGURE 5-5 SOFT TUBE RADIATOR PRESSURE DROP TEST SUMMARY

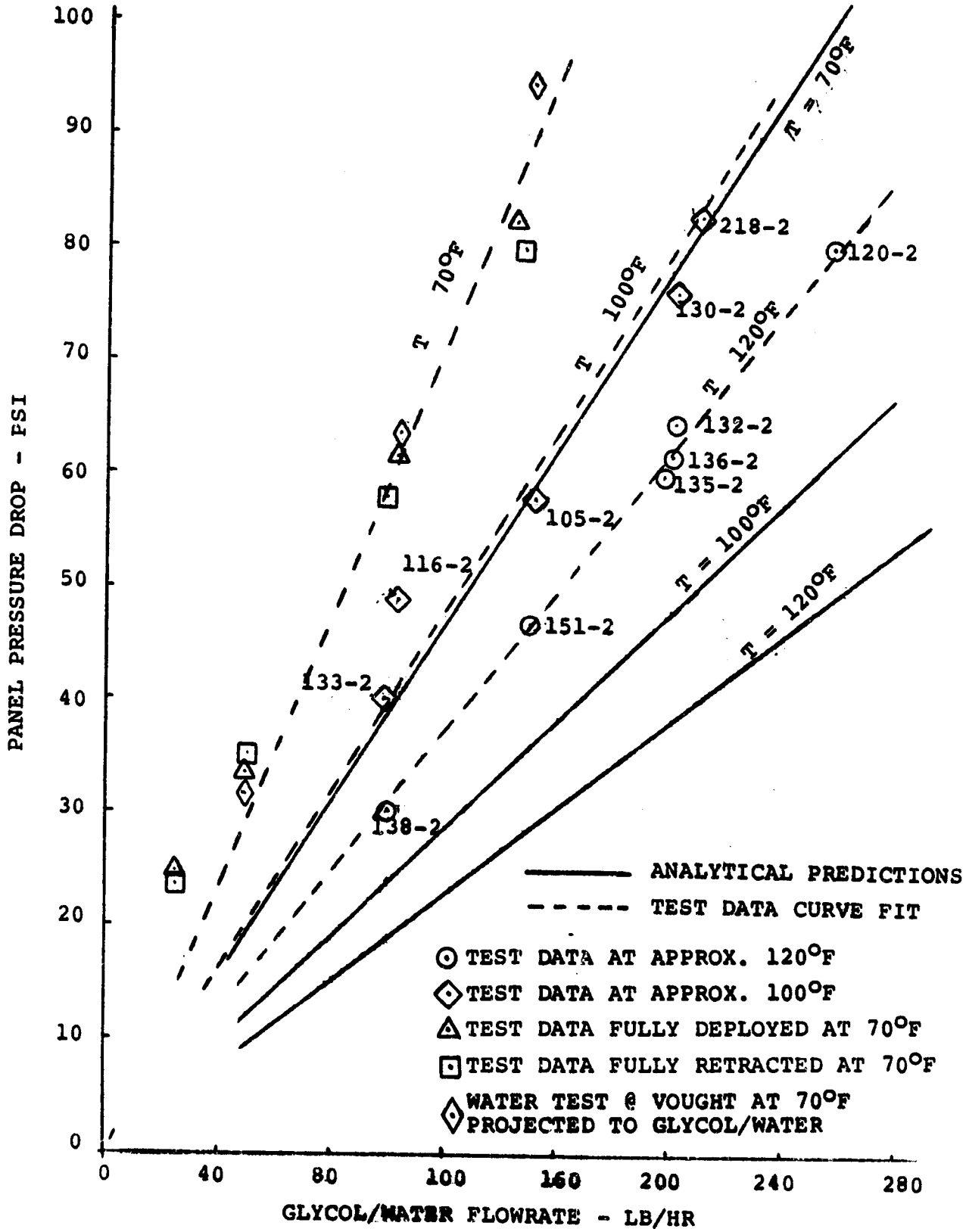

the measured pressure drop is 60 to 62 psi, or about 53 to 60% higher than the analysis.

The cause of the high pressure drop was not known at the time of the tests. Some of the suspected causes were:

(1) Physical blockage due to particulate contamination.

(2) Corrosion in test article manifold.

(3) Shrinkage of PFA Teflon tubing during fusion bonding.

(4) Possible losses in fitting or hardware not accounted for in analysis.

The physical blockage theory, either by contamination or by corrosion was supported by examination of temperature instrumentation on the panel that gave a indication of the panel flow distribution. Table 5-7 shows the panel temperatures for the return half of the panel f · two tests. It is obvious from these temperatures that the flow is less in tubes 34, 38, and 46 than it is in 30, 35 and 42. Also, in water tests, the panel pressure drop was observed to be reduced by about 30% following back flush test as indicated by Figure 5-6.

Because of the unanswered questions concerning the panel pressure drop, the flexible radiator panel was transported to Vought and tests were conducted in the SES laboratory. The tests conducted included (1) an overall system pressure drop test, (2) a dye injection test to observe the flow movement in the individual tubes, and (3) pressure/flow measurement for the individual tubes. Distilled water was used as the test fluid for all the tests.

Figure 5-7 shows a schematic of the test setup for the system pressure drop test and the dye injection test. The results for the system pressure drop test are shown in Table 5-8. Five flowrates were tested ranging from 50 lb/hr to 250 lb/hr. The test was conducted twice: (1) a preliminary test shown in Table 5-8(b) and (2) a retest shown in Table 5-8(a). The water pressure drop values were projected to Glycol/water values by multiplying by the quantity $(\mu_{gw}/\mu_w)\cdot(\rho_w/\rho_{gw})$ which is a value of 4.83 at 70°F. The projected Glycol/water pressure drops for the retest are plotted in Figure 5-5 to show the correlation with data taken earlier at NASA-JSC. A good correlation is shown.

It was interesting to note the variation in the pressure drop between the preliminary test on 4-21-82 and the later test on 4-23-82, shown

ORIGINAL PAGE IS
OF POOR QUALITY

TABLE 5-7

FLOW TUBE TEMPERATURES SOFT TUBE RADIATOR (^{o}F)

DISTANCE FROM STORAGE DRUM

TUBE #	4'	6'	8'	10'	12'	14'	16'	18'	20'	22'	24'
T.P. 116-2	TOTAL FLOW = 102.7 PPH, T(IN) = 141.6^{o}F										
46	52		43			37			34.3		39.6
42									54.4		
38									38.8		
35									49.5		
34									39.7		
30	68			61.4			56		55.1		52.9
T.P. 120-2	TOTAL FLOW = 257.4 PPH, T(IN) = 139.8^{o}F										
46	69.9		63.9			56.7			53.8		57.5
42									85.2		
38									61.1		
35									81.4		
34									63.5		
30	94.9			89.9			87.2		87.6		82.9

FIGURE 5-6 SOFT TUBE RADIATOR PRESSURE DROP (W/H_2O)

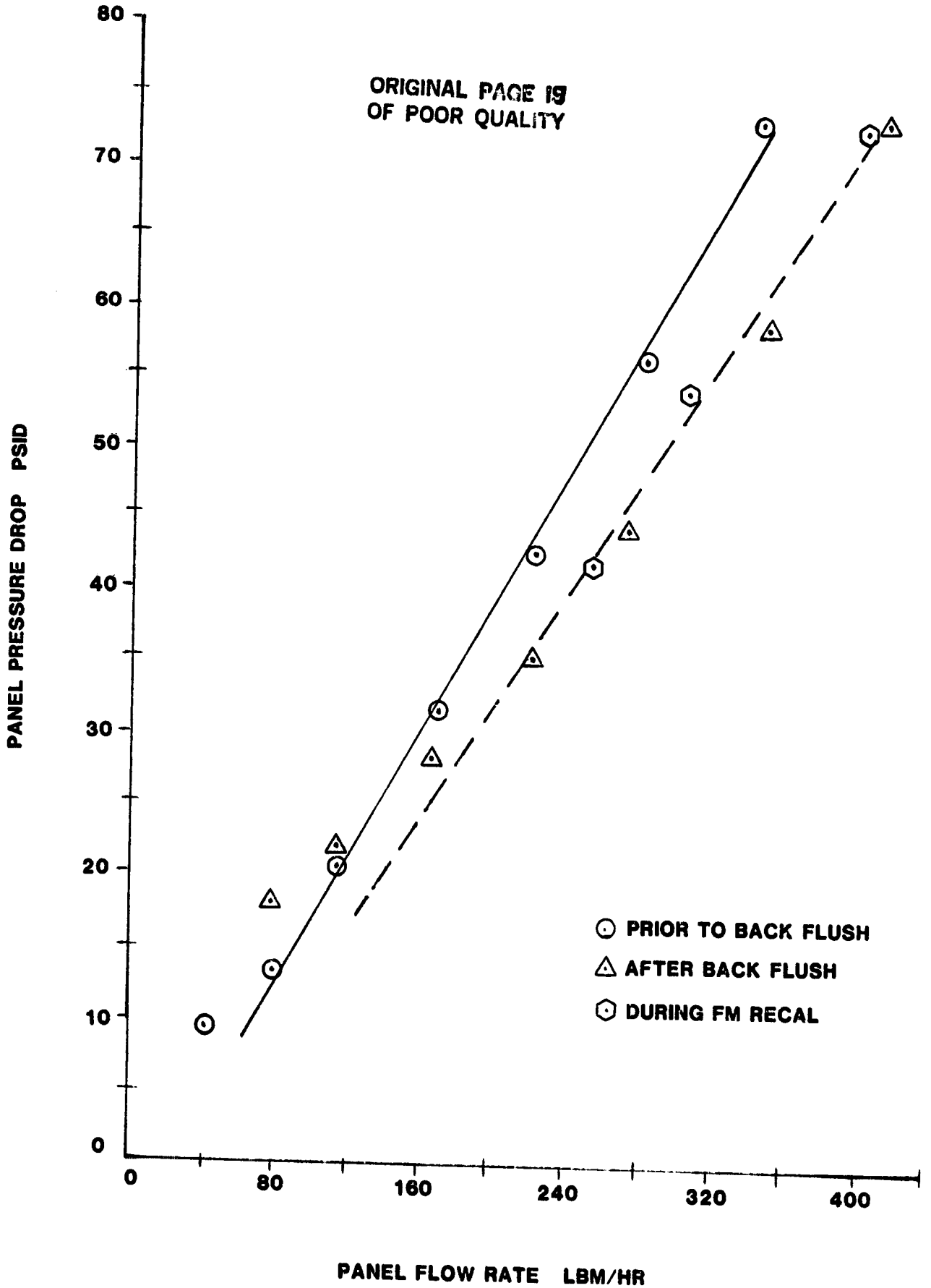

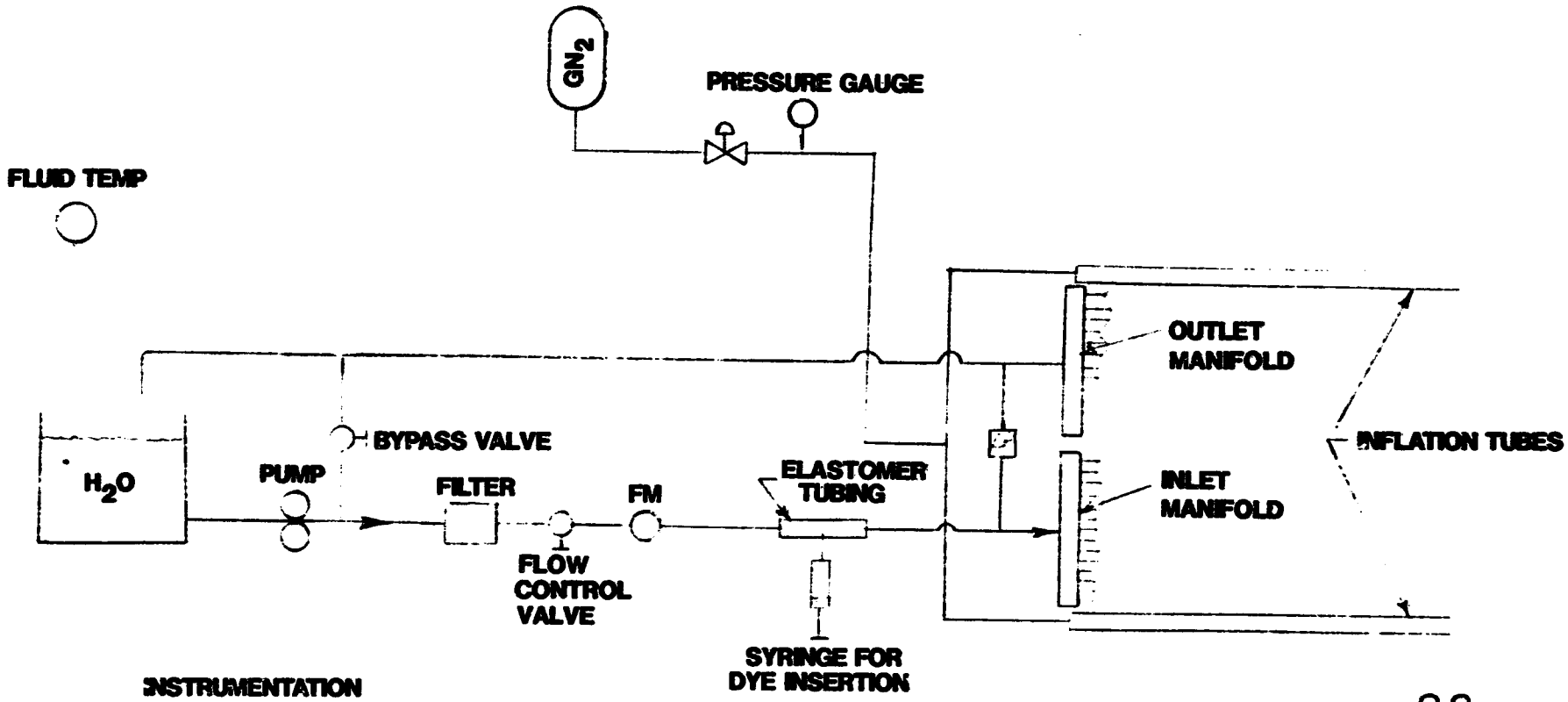

MEASUREMENT	RANGE
FLOWMETER	0-300 LBm/HR H2O
PRESSURE DROP	0-50 PSID
PRESSURE GAUGE	0-10 PSIG
TEMPERATURE	32-100 F

ORIGINAL PAGE IS OF POOR QUALITY

FIGURE 5-7 TEST SETUP FOR SYSTEM FLOW TEST AND DYE INJECTION TEST

TABLE 5-8

a) SYSTEM PRESSURE DROP TEST
CONDUCTED 4-23-82

ROOM TEMPERATURE = 72°F

TEST POINT	FLOW RATE (LB/HR)	ΔP WATER (PSID)	SUMP TEMP (oF)	PROJECTED GLYCOL/WATER ΔP (WATER x 4.83) (PSID)
1	50	6.58	68	31.78
2	100	13.10	68.4	63.27
3	150	19.4	69	93.7
4	200	25.1	69.5	121.2
5	250	31.7	69.8	153.1

b) PRELIMINARY PRESSURE DROP TEST
CONDUCTED 4-21-82

1	50	5.9	71	28.50
2	100	11.85	70.4	57.23
3	150	18.1	70	87.4
4	200	24.2	71	116.9

in Table 5-8. A change of about 7% is observed. This was well beyond the expected variation due to inaccuracies in the data. It was suspected that this variation is due to trash in the outboard manifold as evidenced by other tests discussed below. As the trash is moved around inside the manifold, the flow system configuration changes causing pressure drops to be different. This was also felt to be an explanation for the scatter in the NASA data.

Dye injection tests were conducted to observe the movement of the fluid in the panel. The schematic shown in Figure 5-7 was again the test setup. The dye injected into the elastomer tube was a concentrated solution of Gentian Violet dye. Flow was stopped for observation three times following the first observation of dye at the inlet manifold: 1) at 10 seconds, 2) 25 seconds, and 3) 48 seconds. The distances which the fluid in each tube had progressed was observed for each time. Table 5-9 shows the results for the first two observations. The dye front was still in the left bank for these times. By taking the difference between the 10 second and the 25 second observations, a flow velocity in each tube was estimated as shown in Table 5-9. The flow appeared uniform and the velocities correspond very well with the measured flowrate and the tube ID's of 0.0625 inches. This portion of the test indicated that: 1) there were no restrictions in the tubes on the left half of the panel, and 2) the tube diameters are nominal, i.e. they have not been collapsed in manufacturing.

The dye was also observed at 48 seconds into the test when the dye had progressed to the right tube bank. At that time no dye was observed in the first 4 tubes from the right edge. The dye in tubes 5, 8 and 9 was about 3 to 4 feet down from the outboard manifold. The dye in tubes 6 and 7 was about 2/3 of the way down. The dye in tubes 10 thru 25 had traveled the entire length of the right side. This result indicated clogging of the tubes on the extreme right side, although quantitive data was not available because of the unknown mixing effects of the outboard manifold.

A second dye injection test was conducted with the flow direction reversed from the normal (flow entering the right side first). The results of this test, shown in Table 5-10, indicate that the flow in the right side of the panel was fairly uniform when flowed in reverse, contrary to the indications of the first dye test. This indicated possible foreign material in the outboard manifold, clogging the manifold.

TABLE 5-9

LEFT SIDE DYE INJECTION TESTS

TOTAL FLOW = 50 LB/HR
FLUID TEMP = 69°F

TUBE NO. (FROM LEFT OUT BOARD EDGE)	DYE LOCATION 10 SEC	DYE LOCATION 25 SEC	DISTANCE FLOWED IN 15 SEC	VELOCITY FT/SEC
1	0	7'8"	92"*	0.511*
2	1'11"	14'4"	149"	0.828
3	3'10"	16'6"	152"	0.844
4	5'0"	17'2"	146"	0.811
5	6'5"	18'9"	148"	0.8222
6	6'5"	18'9"	148"	0.8222
7	7'3"	19'11"	152"	0.844
8	7'9"	20'2"	149"	0.828
9	8'7"	20'10"	147"	0.817
10	9'2"	21'2"	144"	0.800
11	9'9"	22'2"	149"	0.828
12	10'4"	23'0"	152"	0.844
13	11'5"	23'2"	141"	0.783
14	11'0"	22'8"	140"	0.778
15	10'3"	22'8"	149"	0.828
16	10'4"	22'7"	147"	0.817
17	9'6"	21'10"	148"	0.822
18	8'5"	20'10"	149"	0.828
19	7'8"	20'1"	149"	0.828
20	7'1"	20'5"	160"	0.888
21	6'3"	19'0"	153"	0.85
22	5'8"	18'8"	156"	0.867
23	4'2"	16'11"	153"	0.85
24	2'5"	15'2"	153"	0.85
25	0"	8'11"	107"*	0.59*

$\bar{V}$ = 0.829** for 2-24

* Velocity not meaningful since dye had not reached tube at 10 seconds.

** Equivalent to 49.5 lb/hr for 25 tubes with .0625 in. I.D.

ORIGINAL PAGE IS
OF POOR QUALITY

TABLE 5-10
RIGHT SIDE DYE INJECTION TESTS

TOTAL FLOW = 50 LB/HR
FLUID TEMP = 69°F

TUBE NO. (FROM LEFT OUT BOARD EDGE)	DYE LOCATION 10 SEC	DYE LOCATION 25 SEC	DISTANCE FLOWED IN 15 SEC	VELOCITY FT/SEC
1	0	1'2"	14"	--*
2	0	5'3"	63"	--*
3	0	7'5"	89"	--*
4	1'1"	10'11"	118"	0.983
5	1'6"	9'4"	94"	0.783
6	2'9"	12'2"	113"	0.942
7	2'11"	12'7"	116"	0.966
8	4'0"	12'11"	107"	0.892
9	4'8"	13'7"	107"	0.892
10	4'9"	13'11"	110"	0.917
11	5'6"	13'11"	101"	0.842
12	6'9"	16'0"	111"	0.925
13	6'3"	13'10"	104"	0.866
14	7'4"	15'0"	92"	0.767
15	6'0"	15'2"	110"	0.917
16	5'11"	14'6"	103"	0.858
17	5'0"	13'11"	107"	0.892
18	4'0"	12'9"	105"	0.875
19	3'9"	12'8"	107"	0.892
20	2'11"	12'2"	111"	0.925
21	2'2"	12'2"	120"	1.000
22	1'6"	11'8"	122"	1.017
23	0'10"	10'10"	120"	1.000
24	0	7'6"	90"*	--*
25	0	2'0"	24"*	--*
				$\bar{V}$ = 0.908**

* Velocity not meaningful
** Equivalent to 54 lb/hr for 25 tubes with 0.0625 in. I.D.

Figure 5-8 shows a schematic of the test setup for radiator tube pressure flow tests. The primary changes were the addition of a second pressure gauge at the outboard manifold, the disconnecting of the radiator tubes from the outlet manifold and the addition of a catch tank and beakers for measuring individual flowrates. With the total radiator flow at 100 lb/hr, the flow from each tube was caught in a beaker for 2 minutes and an accurate weight was determined. Two tests were run. First measuring the flow distribution in the right tubes and second measuring the flow distribution in the left half of the panel. The results of the first test are shown in Table 5-11. The results indicate significant restrictions in tubes 1 thru 5 and tube 7. This is similar but slightly different than observed in the dye tests. (In that test tubes 1 thru 5, 8 and 9 were restricted.) The pressure drop in the apparently unrestricted tubes was close to the calculated value, with the mean difference being 0.11 psi and the standard deviation being 0.29 psi. The mean error is only 2% and the standard deviation only 5%.

The flow direction was reversed and the flow distribution was determined in the left half of the panel was determined. Table 5-12 shows the results of this test. It was observed that flow was totally restricted in three tubes (No. 2, 5, and 7 from the left edge). This is at variance with the dye tests which indicated no blockage in the left side. The flow in the remaining tubes indicated no apparent restriction. An anomaly was observed in this test in the pressure measurement. The measured pressure was less than the calculated pressure in all cases and appeared to be worse as the test progressed to higher number tubes. The mean of the error in the non-clogged tubes was -0.51 psi (calculated pressure drop higher than measured). The standard deviation of the error was about .21 psi.

The primary conclusions from the tests to date are:

(1) The higher-than expected panel pressure drop is due to clogging of the tubes in the downstream half of the panel at the outboard manifold.

(2) The pressure drops observed in the test are consistent with those observed in the NASA-JSC test and the tube pressure drops agree well with predictions.

Since the evidence of the flow/pressure drop tests pointed to foreign material in the outboard manifold, the end cap of the manifold was removed for observation. It was found that excessive corrosion had occurred

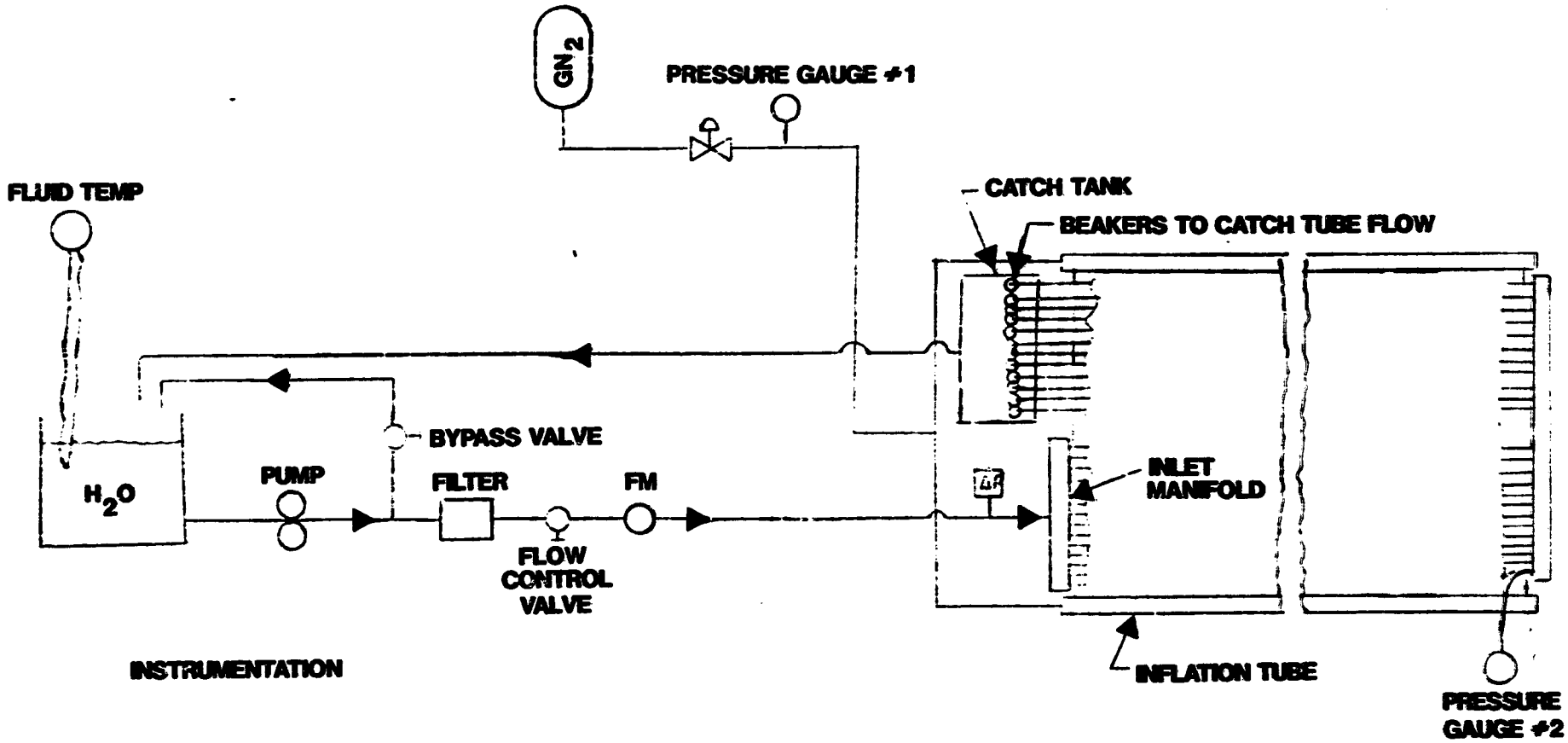

INSTRUMENTATION

MEASUREMENT	RANGE
FLOWMETER	0-300 LBm/HR H2O
PRESSURE DROP	0-50 PSID
PRESSURE GAUGE	0-10 PSIG
TEMPERATURE	32-100 F
PRESSURE GAUGE #2	0-20 PSIG

FIGURE 5-8 TEST SETUP FOR RADIATOR TUBE FLOW TESTS

ORIGINAL PAGE IS OF POOR QUALITY

TABLE 5-11
RIGHT SIDE FLOW TUBE PRESSURE/FLOW EVALUATION

TUBE NO.	TOTAL FLOW (LB/HR)	TOTAL ΔP (PSI)	$\dot{m}$ TUBE FLOW (LB/HR)	TUBE ΔPm (PSI)	CALC TUBE ΔPc FOR $\dot{m}$ (PSI)	ΔPm-ΔPc (PSI)	RESTRICTION EQUIVALENT ORIFICE DIA (IN)	FLOW VELOCITY[1] BASED ON FLOW (FT/SEC)	PROJECTED AVG[2] FLOW VELOCITY FROM DYE TEST (FT/SEC)
1	100	11.4	2.262	6.3	2.6116	3.69	0.01137	0.473	-
2		"	1.06	"	1.169	5.13	0.007	0.221	-
3		"	0.559	"	0.605	5.69	0.005	0.12	-
4		11.2	0.152	6.5	0.162	6.34	0.026	0.032	0.983
5		"	1.693	"	1.913	4.59	0.009	0.354	0.783
6		"	4.798	"	6.057	0.34		1.00	0.942
7		11.2	3.604	6.4	4.366	2.03	0.0166	0.753	0.966
8		"	4.987	"	6.34	0.06		1.04	0.892
9		"	5.052	"	6.40	0.00		1.06	0.892
10		11.1	5.195	6.4	6.65	-0.25		1.09	0.917
11		"	4.742	"	5.98	0.43		0.99	0.842
12		"	5.304	"	6.81	-0.41		1.11	0.925
13		11.0	4.808	6.5	6.07	0.43		1.00	0.866
14		"	5.053	"	6.43	0.07		1.05	0.767
15		"	4.729	"	5.96	0.54		0.99	0.917
16		11.2	5.000	6.4	6.36	0.05		1.04	0.858
17		"	4.927	"	6.25	0.15		1.03	0.892
18		"	4.752	"	5.99	0.41		0.99	0.875
19		11.1	4.762	6.4	6.00	0.40		0.99	0.892
20		"	5.020	"	6.38	0.02		1.05	0.925
21		"	5.112	"	6.52	-0.12		1.07	1.000
22		11.1	5.079	6.4	6.47	-0.47		1.06	1.017
23		"	4.808	"	6.07	0.33		1.00	1.000
24		"	5.046	"	6.40	0.00		1.05	-
25	100	11.1	4.921	6.4	6.24	0.16		1.03	-
TOTALS			103.43					$\bar{V}$ = .863	

[1] Velocity from outboard manifold

[2] Velocity toward outboard manifold

ORIGINAL PAGE IS OF POOR QUALITY

TABLE 5-12
LEFT SIDE FLOW TUBE PRESSURE/FLOW EVALUATION

TUBE NO.	TOTAL FLOW (LB/HR)	TOTAL ΔP (PSI)	$\dot{m}$ TUBE FLOW (LB/HR)	TUBE ΔPm (PSI)	CALC TUBE ΔPc FOR m (PSI)	ΔPm-ΔPc (PSI)	RESTRICTION EQUIVALENT ORIFICE DIA (IN)	FLOW VELOCITY[1] BASED ON FLOW (FT/SEC)	PROJECTEL AVG[2] FLOW VELOCITY FROM DYE TEST (FT/SEC)
1	100	11.96	4.874	5.6	6.17	-0.57		1.02	-
2		"	0.0	"	0.0	-5.60	0	0	0.828
3		"	4.900	"	6.21	-0.61		1.02	0.844
4		11.28	4.616	5.6	5.79	-0.19		0.96	0.811
5		"	0.0	"	0.0	-5.60	0	0	0.822
6		"	4.755	"	5.99	-0.39		0.99	0.822
7		11.2	0.0	5.4	0.0	-5.40	0	0	0.844
8		"	4.606	"	5.78	-0.38		0.96	0.828
9		"	4.828	"	6.10	-0.70		1.01	0.817
10		11.03	4.573	5.3	5.73	-0.43		0.95	0.800
11		"	4.610	"	5.78	-0.48		0.96	0.828
12		"	4.749	"	5.99	-0.69		0.99	0.844
13		10.4	4.292	4.9	5.325	-0.43		0.90	0.783
14		"	4.054	"	4.99	-0.09		0.85	0.778
15		"	4.173	"	5.16	-0.26		0.87	0.828
16		10.4	4.167	4.7	5.15	-0.45		0.87	0.817
17		"	4.259	"	5.28	-0.58		0.89	0.822
18		"	4.299	"	5.34	-0.64		0.90	0.828
19		10.2	4.153	4.7	5.13	-0.43		0.87	0.828
20		"	4.583	"	5.74	-1.04		0.96	[illegible]
21		"	4.431	"	5.52	[illegible]		0.93	0.85
22		10.2	4.312	4.7	5.35	-0.65		0.90	0.867
23		"	4.127	"	5.09	-0.39		0.86	0.85
24		"	4.127	"	5.09	-0.39		0.86	0.85
25	100	10.2	4.213	4.7	5.21	-0.51		0.88	0
TOTALS			97.7					$\bar{V}$ = 0.816	$\bar{V}$ = 0.829

[1] Velocity from outboard manifold

[2] Velocity toward outboard manifold

ORIGINAL PAGE IS OF POOR QUALITY

inside the manifold, covering the entire surface with lumps of a white substance. The corrosion was particularly heavy on the inside face of the fittings welded to the aluminum manifold (around the flow opening). A photo of the open manifold end showing the corrosion is presented in Figure 5-9. The corrosion was identified as aluminum oxide, most likely caused by water or Glycol/water trapped in the manifold following the Solar Exposure test in November 1978. The manifold was thoroughly cleaned and was aladine treated to protect against corrosion. The manifold end cap was welded closed and the manifold replaced. It was observed that the Swagelock fittings were corroded on the exterior. These were replaced for both manifolds and the radiator panel was leak tested. It should be noted that the inlet and outlet manifolds were not refurbished - only the outboard manifold.

In conclusion, flow/pressure drop data for the soft tube radiator measured approximately 60% higher than the predictions would indicate. This was determined to be caused by foreign material in the outboard manifold caused by corrosion.

5.1.4 SINDA Thermal and Flow Analysis of Soft Tube Radiator Test

In order to assess the results of the thermal vacuum test of the soft tube flexible radiator, a thermal math model of the radiator was constructed. The model was constructed in a two step process. The first step was to use the TRASYS program to compute the radiation conductances in the vacuum chamber/test setup. This was done by designing a three-dimensional geometric model of the radiator, its support table and the chamber floor. Figure 5-10 shows the radiator subdivision for the TRASYS model. Then the model was completed by adding the fluid flow paths and thermal capacitances of tube nodes. Conductance paths through the fin material were also added. The model is designed for the SINDA/SINFLO program and is comprised of nearly 100 nodes with over 400 conductance paths. The model was constructed in as simple a manner as it could be without eliminating the capability to study in detail the test results. Figure 5-11 depicts the fin nodes and Figure 5-12 describes the fluid network of the model. The model could very easily be integrated with other models of the vehicle to which the radiator would be attached.

Since the model was designed for the full deployment configuration, only those test points could be analyzed. Six test points in this fully deployed configuration were run in each of the two weeks of testing. The sink temperature during the test was simulated by using infrared lamps to heat the

ORIGINAL PAGE IS
OF POOR QUALITY

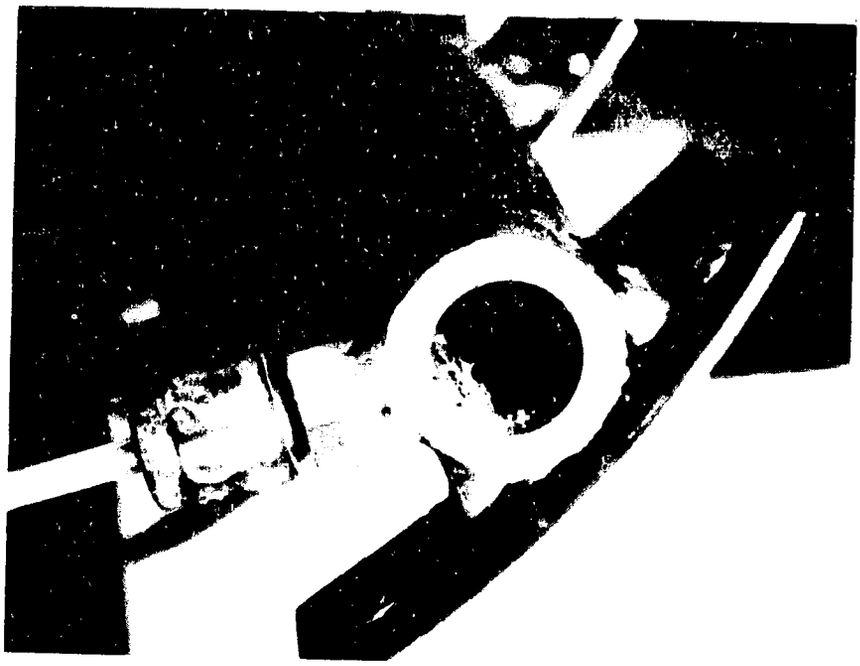

FIGURE 5-9

CORROSION INSIDE FLEXIBLE RADIATOR MANIFOLD

FIGURE 5-10 TRASYS SOFT TUBE RADIATOR SUBDIVISION FOR POST TEST ANALYSIS

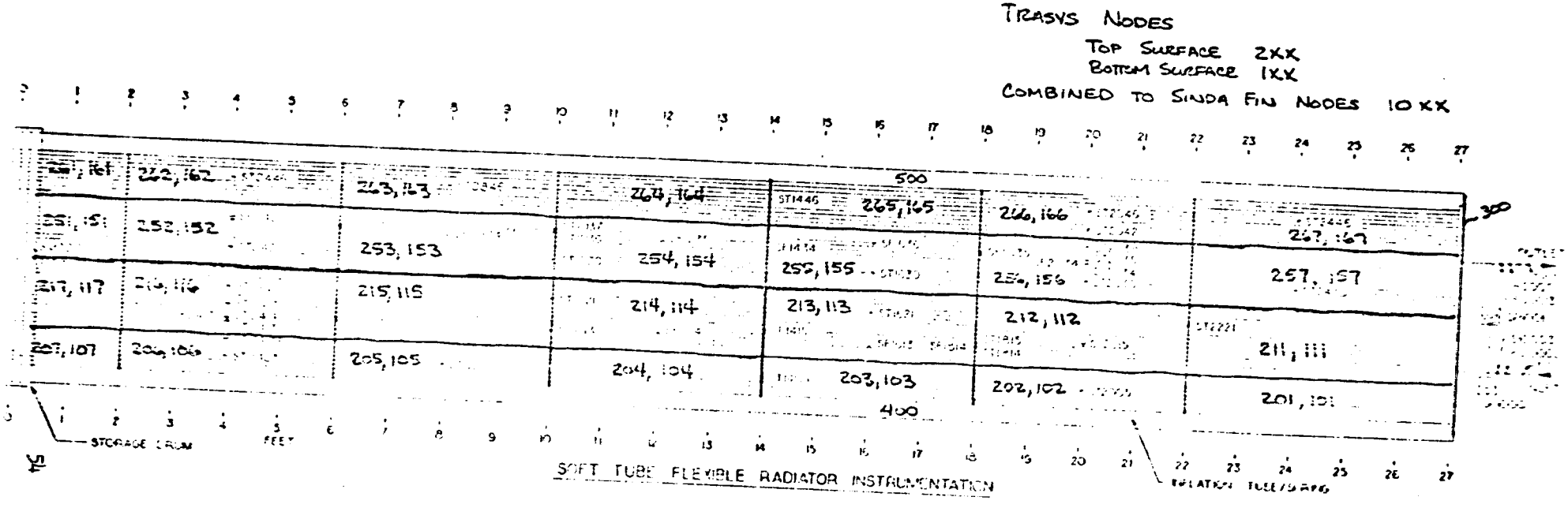

ORIGINAL PAGE IS OF POOR QUALITY

FIGURE 5-10 (CONT'D)

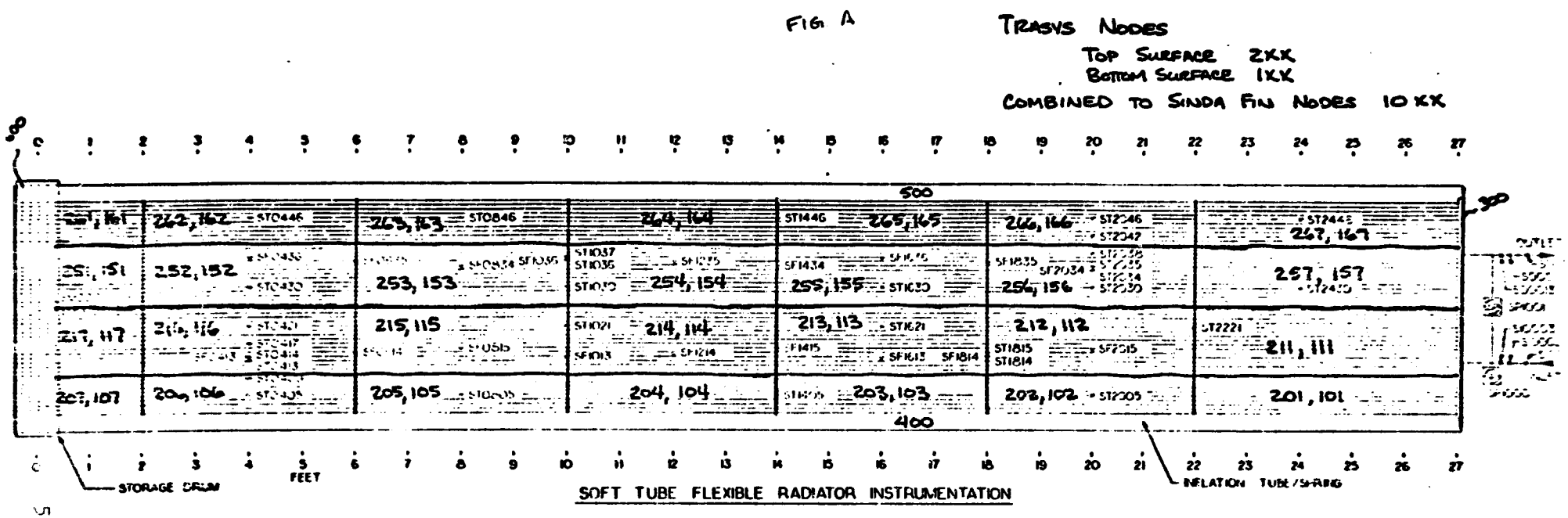

SOFT TUBE FLEXIBLE RADIATOR INSTRUMENTATION

ORIGINAL PAGE IS OF POOR QUALITY

FIGURE 5-11 SINDA/SINFLO MOEL SUBDIVISION

SINFLO FLUID & TUBE NODES
TUBE NODES 2XX

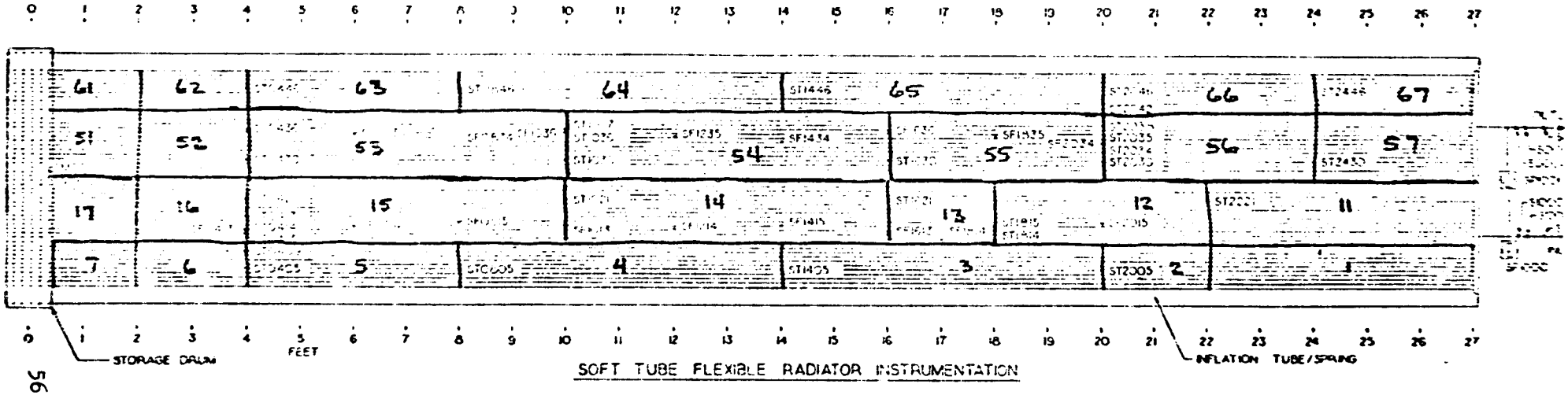

SOFT TUBE FLEXIBLE RADIATOR INSTRUMENTATION

ORIGINAL PAGE IS OF POOR QUALITY

FIGURE 5-11 (CONT'D)

SINFLO FLUID & TUBE NODES
TUBE NODES 2XX

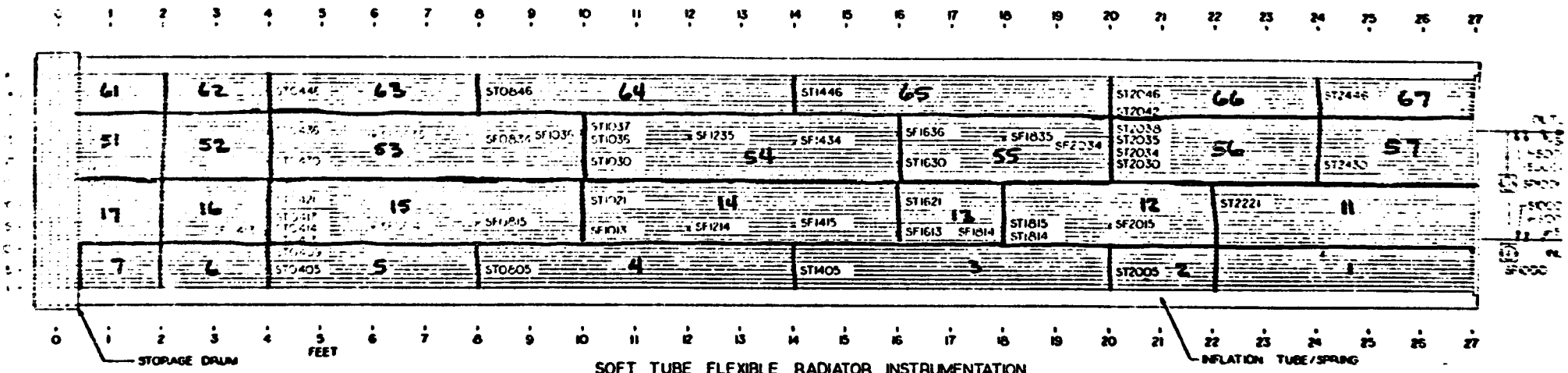

SOFT TUBE FLEXIBLE RADIATOR INSTRUMENTATION

ORIGINAL PAGE IS
OF POOR QUALITY

ORIGINAL PAGE IS
OF POOR QUALITY

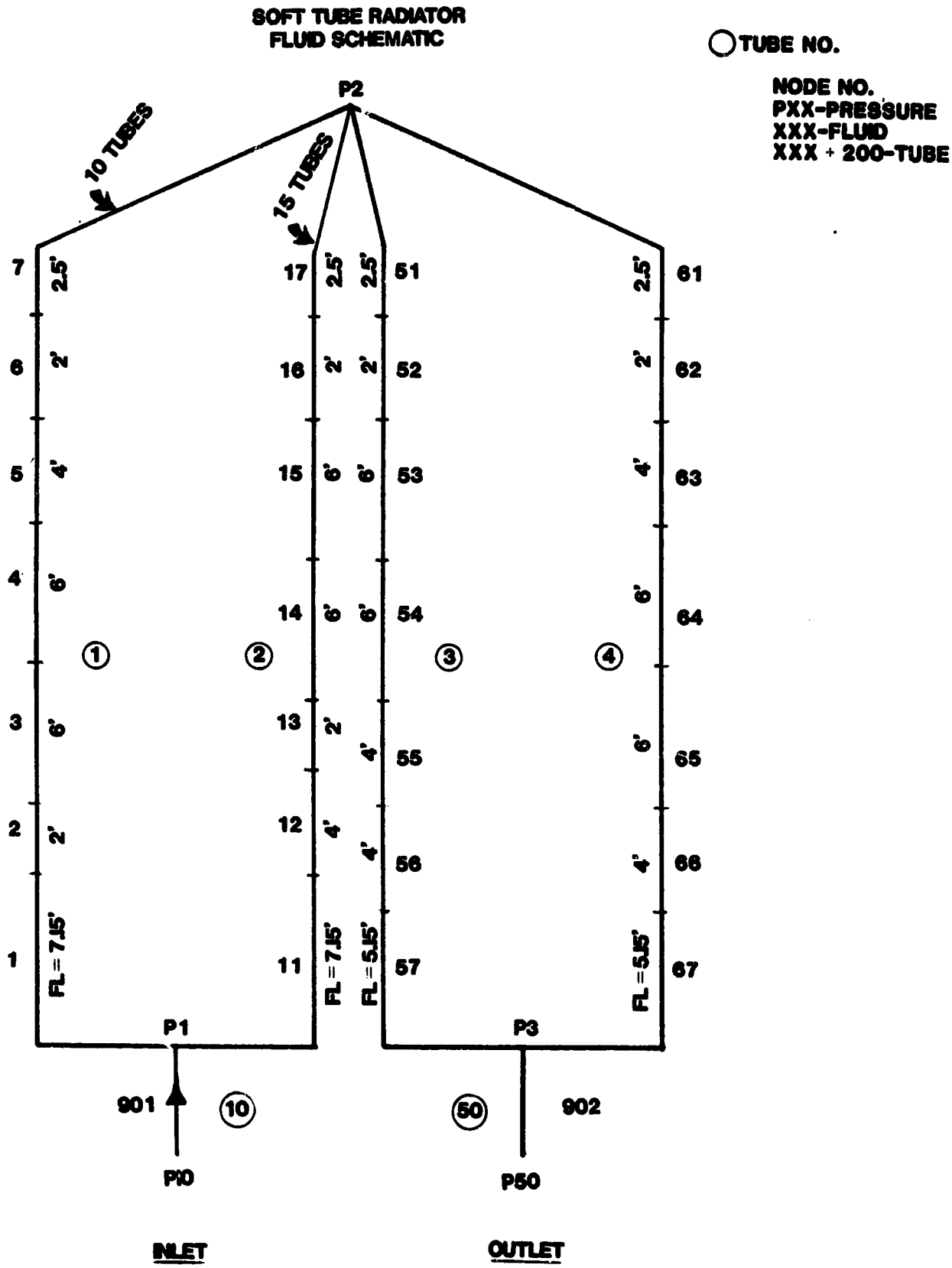

FIGURE 5-12 SINDA FLUID NETWORK

top surface of the radiator only. The test setup attempted to provide uniform heating. The model predicted greater net heat rejection (lower outlet temperatures) at the sink temperatures which were believed to have been simulated. Only by raising the effective sink temperature does the model predict the measured performance. Test points 129, 130 and 131 appear to have an effective sink temperature of 40°F (see Table 5-13). All of the other fully deployed test points appear to have effective sink temperatures of between 10°F and 20°F. Any attempts at lower sink temperatures only resulted in freezing the radiator fluid. Tables 5-14 and 5-15 show the results of determining the effective sink temperature for the remaining test points with a fully deployed radiator. A closer look at the radiator temperatures during the sink temperature calibration (see Table 5-16) indicate that the environment simulation was very non-uniform under no flow conditions. The panel temperatures ranged from 22.8°F to -7.3°F when the environment was believed to have been 0°F. There are a number of sources for this non-uniform heating. The heated surface of the radiator was surrounded by highly reflective aluminized Mylar insulation blankets which wrapped the inflation tubes and also the inlet manifold. In addition, the stowage drum sat above the heated surface and the top portion remained very close to the IR lamps. This would lead to abnormally high heating of the drum and its integral fluid manifold.

The results shown in Tables 5-14 and 5-15 were compared with the results of the TI59 predictions shown in Tables 5-1 and 5-2 to obtain a correlated simplified model. The results compare very well.

In order to more accurately predict the radiator performance, panel environments were estimated based upon the steady state panel temperatures observed in the test during the IR calibration of test point 107-2 (see Table 5-16). The SINDA model predicted outlet temperatures are compared with the test data for test points 116-2, 117-2 and 120-2 in Table 5-17. The predicted results are closer to the test data, but still higher.

5.1.5 Deployment/Retraction System

The soft tube radiator inflation-tube deployment system performed well particularly following improvements in the test support equipment incorporated after the first week of testing. Panel retraction was extremely slow until the line size into the inflation tube was increased from 1/4 inch to 1/2 inch diameter and a solenoid dump valve was added (refer to Figure 4-4). Panel deployment required 3 psi or less pressure differential to

ORIGINAL PAGE IS
OF POOR QUALITY

TABLE 5-13
EFFECTIVE SINK DETERMINATION

TEST POINT	TEST DATA OUTLET TEMPERATURE	MODEL OUTLET W/EFFECTIVE SINK TEMPERATURE 30°F	40°F	50°F
129	66.8°F	59.2°F	65.0°F	71.1°F
130	85.3°F	80°F	83.9°F	87.7°F
131	93.2°F	90.4°F	93.6°F	96.9°F

TABLE 5-14
EFFECTIVE SINK DETERMINATION

TEST POINT	TEST DATA OUTLET TEMPERATURE	MODEL OUTLET W/EFFECTIVE SINK TEMPERATURE 0°F	10°F	20°F
116	57.3°F	51.5°F	55.9°F	61.0°F
117	84.8°F	80.8°F	82.8°F	86.0°F
120	94.1°F	89.7°F	92.4°F	95.0°F

TABLE 5-15
EFFECTIVE SINK TEMPERATURE DETERMINATION

TEST POINT	TEST DATA OUTLET TEMPERATURE	MODEL OUTLET W/EFFECTIVE SINK TEMPERATURE 0°F	10°F	20°F
121	48.7°F	35.4°F	42.2°F	47.7°F
122	60.6°F	52.2°F	56.5°F	61.3°F
123	79.3°F	73.3°F	76.5°F	79.9°F
124	39.4°F	23.5°F	30.5°F	37.9°F
125	40.9°F	31.3°F	37.8°F	43.2°F
126	48.1°F	41.0°F	46.5°F	50.7°F

ORIGINAL PAGE IS
OF POOR QUALITY

TABLE 5-16
CORRELATION OF SOFT TUBE MODEL TO TP 107-2
(IR CALIBRATION CONDITIONS)

TEMPERATURES (°F)		SINDA TUBE NODES	
ST2005 = 15.9		202 = 16.3	
ST1405 = 7.4		203 = 15.9	
ST0805 = -5.1		204 = 1.0	
ST0405 = -7.3		205 = 1.8	
ST0409 = -7.1			
ST2221 = 14.2		211 = 17.2	
ST1814 = 19.4		212 = 17.4	
ST1815 = 21.1			
ST1621 = -6.7		213 = 2.3	
ST0421 = -6.2		214 = 1.8	
ST0417 = -7.8			
SM0001 = 47.9		600 = 44.9	DRUM NODE
SM0002 = 47.7			
ST0430 = -1.6		252 = -2.0	
ST0436 = 2.8			
ST1036 = -8.3		253 = -2.7	
ST1630 = 0.3		254 = 5.2	
ST2030 = 6.6		255 = 6.9	
ST2038 = 8.5			
ST2430 = 11.6		256 = 9.0	
ST0446 = 9.7		262 = 9.3	
ST0846 = 0.0		263 = 8.9	
ST1446 = 11.0		264 = 9.0	
ST2046 = 18.7		265 = 17.2	
ST2042 = 10.7			
ST2446 = 22.8		266 = 18.6	
T_{in} = 41.8		901 = 41.8	
T_{out} = 32.3		902 = 14.4*	

TABLE 5-17
SOFT TUBE RADIATOR TEST POINT CORRELATION
FULLY DEPLOYED WITH TUBE I.D. = .0625 IN.

T_{SINK} = 0°F WITH SIMULATED ENVIRONMENT

T.P.	w	T_{IN}	TEST OUT	MODEL OUT
116-2	102.7	141.6	57.3	54.8
117-2	203.5	157.9	84.8	82.0
120-2	251.4	139.8	94.1	91.7

inflate the tubes. Total area deployment was generally accomplished in less than 5 minutes from the initiation of pressurization. In the test, deployment and retraction was controlled manually with close attention given to avoiding inflatation tube over-pressurization. No attempt was made to establish a rapid deployment time. Dumping the gas from the inflatation tubes for retraction was accomplished by remotely opening the solenoid dump valve. This valve's orifice and connecting lines determine gas bleed off time and therefore panel retraction time (approximately 8 minutes). The soft tube radiator and inflation tube deployment system is force-sensitive and a small imbalance of forces will cause the panel to track out-of-line (i.e. not travel straight). An imbalance of forces and out-of-line tracting shows up most dramatically during retraction. If an imbalance exists the storage drum does not roll back on top of the panel but "cones" to the side of least resistance.

This was the first thermal vacuum test which deployed and retracted the panal although roughly 100 ambient cycles on the system had been accomplished. Prior to thermal vacuum testing the deployment system was adjusted to track a straight line. The final adjustment prior to chamber pump down had the panel "biased" or "coning" to the inlet manifold side approximately 1 inch which was considered acceptable. However, during the test the panel was observed to "cone" to the outlet manifold side approximately 6 inches during retractions. These retractions were made with the transport fluid flowing. The cause of the "coning" reversal is not known but an investigation into the problem should include:

1. The difference in flow tube stiffness between inlet and outlet tube banks (25 tubes each).
2. Thermal distortion of the retraction springs.

5.2 HARD TUBE RADIATOR PANEL

The items to be verified by testing the hard tube flexible radiator panel included the heat rejection performance, pressure drop, panel fin effectiveness and evaluation of the deployment system. The hard tube radiator is designed to reject 1.1 kW of heat to a $0^{o}F$ sink while flowing 300 lb/hr of Freon 21 entering the panel at $100^{o}F$ (and exiting at approximately $40^{o}F$). The panel has a 3 inch tube spacing designed to provide a fin effectiveness of 0.725. A design value was not specified for the panel pressure drop. These items are evaluated below.

5.2.1 Performance

The test data that was obtained to evaluate the hard tube radiator panel performance is summarized in Tables 5-18 and 5-19 for the two days of testing. Shown are the flowrate, inlet and outlet temperatures, inlet pressure, pressure drop, sink temperature and heat removed from the fluid. The fluid heat rejection is calculated by:

$$Q_{rej} = \dot{m}\ Cp\ (T_{in} - T_{out})$$

where:

Q_{rej} = heat rejected

$\dot{m}$ = Freon 21 flowrate

Cp = Freon 21 specific heat (Function of temperature)

T_{in} = fluid inlet temperature

T_{out} = fluid outlet temperature

Test point 924 (summarized in Table 5-20) is the only hard tube radiator test point which had the fluid inlet conditions ($\dot{m}$ = 305.5 pph, T = $99.6^{o}F$) and sink temperature ($4^{o}F$) close to the design values. Full panel deployment is actually 23.3 ft which is approximately 10% greater than the actual panel deployed length of 20.9 ft, shown in Table 5-18. Therefore the panel heat rejection would be expected to be reduced proprotionally from 1.1 kW to 1 kW or 3413 B/hr. The heat rejection was measured to be 3243 B/hr or 5% low. Fin damage and poor tube-to-fin bonding could account for the additional loss of panel heat rejection capacity.

Panel fin effectiveness for the 3 inch tube spacing design was calculated as .725, however, a value of 0.5 correlates panel heat rejection for the cold wall environment test points to instrumentation accuracy. But this same fin effectiveness (0.5) does not correlate the zero ^{o}F test point heat rejection well resulting in deviations from the assumed correct value of

TABLE 5-18
HARD TUBE PERFORMANCE TEST SUMMARY FIRST WEEK

TIME D:H:M	TP NO.	DEP CD	WDOT PPH	IN F	TOUT F	PIN PSIA	DP PSI	TS F	QREJ B/H
261:23:45	901	0	151.7	71.4	60.4	79.6	6.6	C/W	418
262:01:46	902A	0	230.9	73.9	68.4	94.0	16.0	C/W	320
03:10	904	0	302.1	72.0	68.3	104.8	28.8	C/W	281
05:23	904A	0	416.6	78.5	75.5	130.9	53.4	C/W	305
07:20	906	0	604.6	69.7	68.9	193.9	-	C/W	107
10:18	903	0	284.4	141.5	132.7	116.6	31.0	C/W	687
12:01	905	0	507.2	139.8	135.5	176.6	93.2	C/W	591
16:08	917	3	301.7	144.3	57.7	113.8	29.8	C/W	6795
18:18	920	3	503.5	140.7	82.7	175.0	89.0	C/W	7708
19:55	919	3	504.0	69.6	27.5	154.7	72.3	C/W	5228
262:22:09	918	3	298.3	70.9	57.6	105.9	26.3	C/W	4623
IR LAMP CALIBRATION TO TSINK = 0 F									
263:03:38	924	3	305.5	99.6	57.8	112.5	30.0	4	3243
04:56	923	3	301.7	70.9	40.1	108.7	26.8	3	2306
05:43	927	3	507.0	70.5	49.1	158.6	73.5	3	2702
07:08	926	3	494.4	139.4	99.3	172.2	84.1	3	5286
07:55	925	3	300.5	139.4	84.2	121.0	30.5	2	4364
263:09:02	970	3	150.6	136.4	58.0	97.8	6.7	1	3075

(1) Deployment Code: 0 = Stowed (Deployed Length = 0.58 Ft.)
3 = Fully Deployed (Deployed Length = 20.9 Ft.)

(2) C/W = Cold Wall Environment (180°F)

(3) Day 261 - 17 September 1980

ORIGINAL PAGE IS
OF POOR QUALITY

TABLE 5-19
HARD TUBE PERFORMANCE TEST SUMMARY SECOND WEEK

TIME D H M (3)	TP NO	DEP CD	WHEEL MTH (1)	[illegible] F	[illegible]	[illegible]	[illegible]	[illegible] F	DREF BTU (2)
273 11:13	918-2	3	301.2	[illegible]	3.4	[illegible]	[illegible]	C/W	405
12:21	919-2	3	504.2	[illegible]	19.[illegible]	[illegible]	[illegible]	C/W	6137
14:44	964-2	[illegible]	502.[illegible]	140.0	[illegible]	[illegible]	37.4	C/W	8952
15:45	917-2	3	209.3	[illegible]	40.[illegible]	16.(4)	0.7	C/W	7577
17:51	965-2	[illegible]	166.0	142.9	4.7	[illegible]	6.7	C/W	5791
20:11	913-2	2	304.1	142.[illegible]	84.8	112.5	30.9	C/W	4650
21:20	914-2	2	501.8	144.2	102.3	194.0	89.1	C/W	5505
273:23:01	910-2	1	499.9	140.1	120.6	191.6	88.8	C/W	2665
274:00:31	909-2	1	200.1	139.5	112.9	[illegible]	30.2	C/W	2149
03:28	911-2	1	505.6	69.9	57.4	154.6	73.3	C/W	1583
			IR LAMP CALIBRATION TO TSINK=0 F						
17:17	966-2	3	147.0	146.6	59.6	105.9	4.5	-3	3091
18:48	925-2	3	295.1	142.0	87.3	125.8	29.2	0	4267
19:57	926-2	3	506.2	146.6	103.5	197.1	91.7	0	5020
21:44	924-2	3	307.9	100.4	64.3	120.6	29.2	1	2826
274:23:08	971-2	2	509.7	141.1	117.7	DS	-	3	3231
275:01:52	972-2	2	302.0	139.7	108.1	169.8	35.4	4	2557
03:28	973-2	1	301.9	140.7	124.3	177.3	33.6	4	1346
04:44	974-2	1	500.2	140.5	129.6	195.0	93.3	6	1487
08:43	975-2	1	510.9	69.6	66.2	149.1	73.6	6	446
10:03	976-2	1	148.5	69.[illegible]	58.5	DS	4.2	6	416
14:38	912-2	2	148.1	70.0	19.0	85.8	4.3	C/W	1851
15:40	915-2	2	509.4	69.9	47.9	159.8	74.3	C/W	3422
16:59	969-2	2	502.8	70.0	58.3	159.7	74.2	-8	1468
18:20	968-2	[illegible]	145.8	[illegible]	44.6	86.5	4.0	-3	968
20:30	967-2	3	152.9	70.2	31.9	86.9	1.8	-1	1457
21:45	923-2	3	302.0	70.4	44.7	107.4	25.[illegible]	0	1903
275:23:26	927-2	3	499.9	69.5	61.5	156.7	77.[illegible]	2	1007
276:11:31	964-2R	3	498.6	139.2	47.0	168.9	82.8	C/W	8229
13:37	965-2R	3	174.0	144.4	11.4	DS	8.4	C/W	5863
18:48	927-2R	2	501.1	69.9	5[illegible].9	152.8	68.9	0	2118
19:47	967-2R	3	149.8	70.[illegible]	25.1	85.5	3.[illegible]	-6	1661
276:21:07	918-2R	2	505.5	70.0	8.7	146.1	2[illegible].5	C/W	4585
277:10:16	964-2R	3	496.7	139.9	72.6	DS	81.1	C/W	8747

(1) Deployment Code: 1 = 1/3 Deployed (Deployment Length = 7.83 Ft.)
2 = 2/3 Deployed (Deployment Length = 15.58 Ft.)
3 = Fully Deployed (Deployment Length = 23.3 Ft.)

(2) C/W = Cold Wall Environment (-180°F)

(3) July 273 - 29 September 1980

(4) DS = Down Scale = Value Calibration Curve

ORIGINAL PAGE IS
OF POOR QUALITY

TABLE 5-20
HARD TUBE RADIATOR TEST DATA
TEST POINT 924

SYS= 1 SCOOP REAL TIME**D=263 H= 3 M=38 S=11** DELTA TIME=+000:00:00 PG= 1

P	I -MID-	---VALUE-- *	-UNIT-	-----DESCRIPTION------	-LO LIMIT-	-HI LIMIT-
1		HARD TUBE PERFORMANCE SUMMARY				
[illegible]	[illegible]	305.5	LB/HR	HT FLOW RATE		
[illegible]	[illegible]	99.6	DEG-F	INLET TEMP		
[illegible]	[illegible]	57.8	DEG-F	OUTLET TEMP		
[illegible]	[illegible]	41.82	DEG-F	FREON-21 DELTA T		
[illegible]	[illegible]	112.5	PSIA	INLET PRESSURE		
[illegible]	[illegible]	30.0	PSID	DELTA P IN/OUT		
8	[illegible]	20.92	FEET	DEPLOYED LENGTH, HT *		
9	[illegible]	67.54	SQFT	PROJECTED AREA HT		
10	[illegible]	135.08	SQFT	RADIATING AREA HT		
11	[illegible]	0.709	NONE	AVE FIN EFF. HT		
12	[illegible]	74.7	DEG-F	AVE TUBE TEMP. HT		
13	[illegible]	109.30	B-H-SF	AVG HOT FLUX HT/0.71		
14	[illegible]	7383	BTU/HR	LOWER Q ABSORBED. HT		
15	[illegible]	66.3	BTU/HR	FLOOR Q ABSORBED HT		
16	[illegible]	7444	BTU/HR	TOTAL ABSORBED Q. HT		
17	[illegible]	3	DEG-F	SINK TEMP HT		
18	[illegible]	9485	BTU/HR	TOTAL RADIATED Q. HT		
19	[illegible]	1961	BTU/HR	NET Q REJECTED. HT		
20	[illegible]	3243	BTU/HR	FLUID Q REMOVED. HT		

*Maximum Deployed Length = 23.3 Ft.

ORIGINAL PAGE IS
OF POOR QUALITY

20 to 40 percent. One possible source of error appears to be the IR lamp simulation of the zero °F sink temperature. The lamps were off during the cold wall test point runs and therefore were not a factor. The "correct" value of panel heat rejection was taken as that parameter titled and printed out as "Fluid Q Removed" (ZQ9001) by the FLEX data system. This "correct" value was compared to a calculated heat rejection using the following equation.

$$Q_{RAD} = \sigma \epsilon \eta A (T_{RAD} - T_{SINK})$$

where:

η = 0.5 (value assumed for correlation)

ϵ = 0.71

σ = Stefan-Boltzmann constant

A = ZA9002, Radiating area

T_{RAD} = ZT9000, Avg. tube temperature

T_{SINK} = Fin sample temperature

The cold wall environment heat rejection being correlatable to a low fin effectiveness has credence when the panel fabrication and panel fin damage is reviewed. The hard tube panel flexible fin was damaged during the thermal vacuum testing (see Figure 5-13). This damage is believed to have been caused by the 1/8" diameter nylon cords which are used to rotate the storage drum for panel deployment. Pre-test ambient deployment/retraction cycles did not cause the fin damage (i.e. the fin was not damaged prior to the thermal vacuum test). The fin damage appears to have been caused when the storage drum "froze" (i.e. would not rotate for panel deployment). Repeated deployment attempts in the "frozen" condition probably resulted in the fin being damaged. Hard tube panel deployment problems were recorded in the test timeline notes (Appendix B) as early as day 263 (1st week).

Resolution of the deployment system "freezing" will require disassembling the panel storage drum and coiled flex-hose fluid transfer devices (located on the ends of the storage drum axle). During the disassembly process close attention should be given to the alignment and galling of bushing, bearings and bearing retainers on the storage drum axle. Inspection of the fluid transfer device can not be made until the flex hose retaining sleeve is removed. The hose shuttle which reverses the flex hose winding direction is a potential source of storage drum binding. The braided flex hose moves past several Teflon "slider blocks" on the hose shuttle and the Teflon may have cold-flowed into the hose braid causing the binding.

ORIGINAL PAGE IS
OF POOR QUALITY

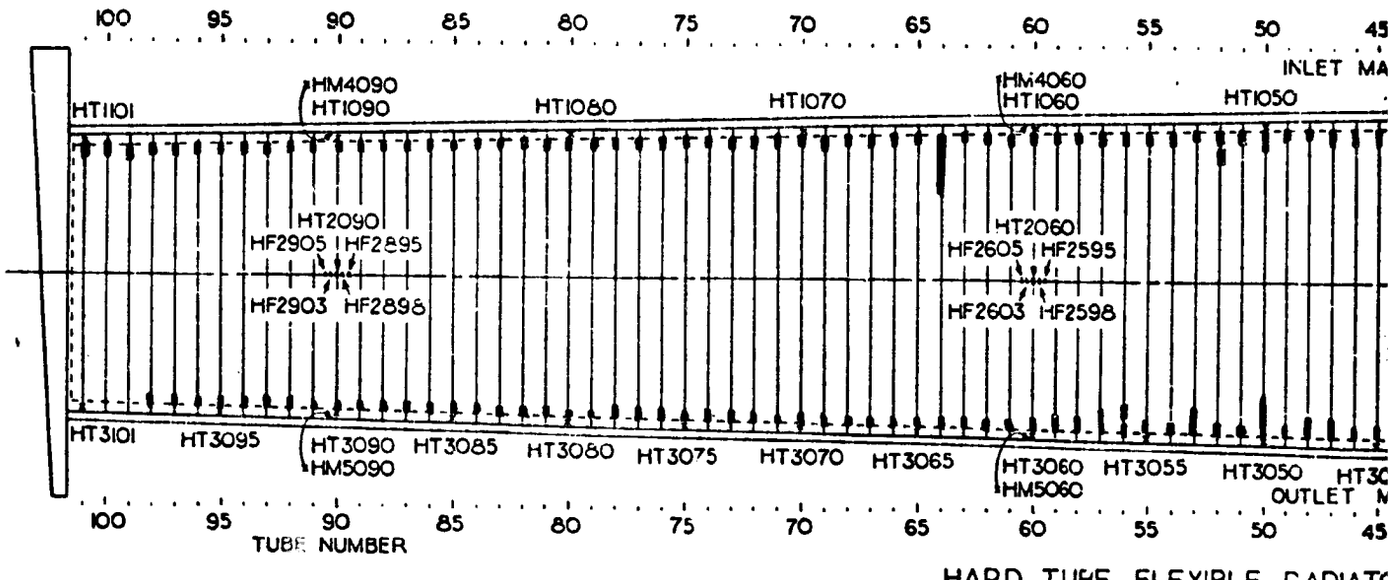

HARD TUBE FLEXIBLE RADIATO

POST TEST DAMAG

— AREAS WHERE TUBE TO FIN CONTACT EITHER DESTROYED OR STRETCHED LOOSE BY TUBE BENDING

FIGURE 5-13 HARD TUBE FLEXIBLE RADIATOR POST TEST DAMAG

FOLDOUT FRAME

ORIGINAL PAGE IS
OF POOR QUALITY

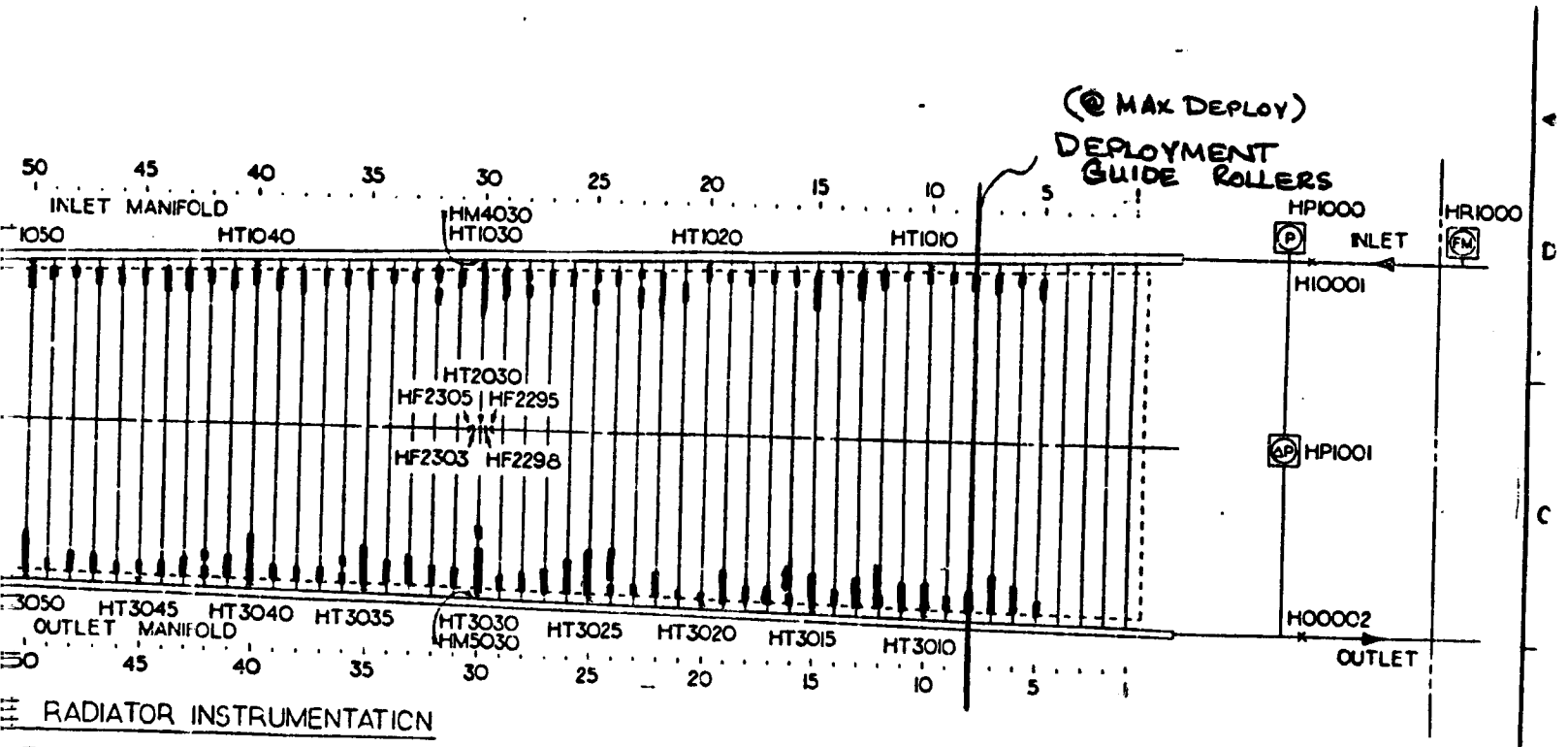

RADIATOR INSTRUMENTATION

DAMAGE SKETCH

DJB 10/8/80

PART NUMBER	DESCRIPTION	MATERIAL	SPECIFICATION
DIMENSIONAL TOLERANCE UNLESS NOTED OTHERWISE .10 .02 .005 ANGULAR	SIGNATURES / DATE: DH, ENG, CH, APP, AUTH	NATIONAL AERONAUTICS & SPACE ADMINISTRATION MANNED SPACECRAFT CENTER · HOUSTON TEXAS	
SURFACE FINISH IN MICROINCHES RMS UNLESS NOTED OTHERWISE ✓		FLEXIBLE RADIATORS	
NEXT ASSEMBLY		SIZE F / DWG NO	
		SCALE	SHEET

DAMAGE SKETCH

FIGURE 5-13

FOLDOUT FRAME

The hard tube radiator was designed and sized to reject 1.1 kW to a $0^{\circ}F$ sink while flowing 300 pph of Freon 21 (entering the panel at $100^{\circ}F$ and exiting at $40^{\circ}F$). The fluid-to-tube temperature difference for the fully deployed panel is 2 to $10^{\circ}F$. Larger differences of 20 to $30^{\circ}F$ were measured for the 1/3 and 2/3 deployed panel configurations. The causes of these large fluid-to-tube temperature differences need to be investigated further. When the panel is partially deployed, the stowed flow tubes are in a benign environment and tend to act as bypass lines to the deployed panel area. The short flow tubes (toward the panel tip) are designed to carry less flow but could be getting much less flow than expected due to the flow bypassing effect. Fluid-to-tube heat transfer resistance increases as the tube flowrates decrease (for turbulent flow) which would contribute to the high fluid-to-tube temperature differences in partially deployed configurations.

The hard tube panel was instrumented with 50 thermocouples. Thirty-two thermocouples were installed on the flow tubes of which 19 were at the outlet manifold side of the panel. These nineteen flow tube thermocouples can be used to infer a panel flow distribution. Figures 5-14 and 5-15 show the typical flow tube temperature profiles out along the panel. The higher outlet temperature tubes have the larger flowrates. For example tubes 55 and 75 thermocouples indicate more fluid flowing in these tubes than in adjacent instrumented tubes. If these tubes are actually getting a larger flow, then other tubes must be receiving less than their design flow. The hard tube panel flows are designed to be different for each flow tube with the longest tube receiving the greatest flowrate. Off-design flow distribution would tend to reduce panel heat rejection.

Another effect which was considered in the testing was that of the manifold links on panel heat rejection. Test point 964-2 flow conditions were run with the manifold links (bare aluminum) exposed to the thermal environment and then repeated with the manifold links and wing-tip spring box insulated with 6 layers of aluminized mylar. Figures 5-16 and 5-17 show the manifold link temperatures for the insulated and un-insulated test runs. When the links are insulated the inlet manifold fluid keeps the link temperatures almost constant along the panel and above the inlet side tube temperatures which are exposed to the environment. For the case of the un-insulated inlet manifold links, the link temperatures radiating to the cold wall environment

FIGURE 5-14
HARD TUBE FLEXIBLE RADIATOR TEMPERATURES, T.P. 974

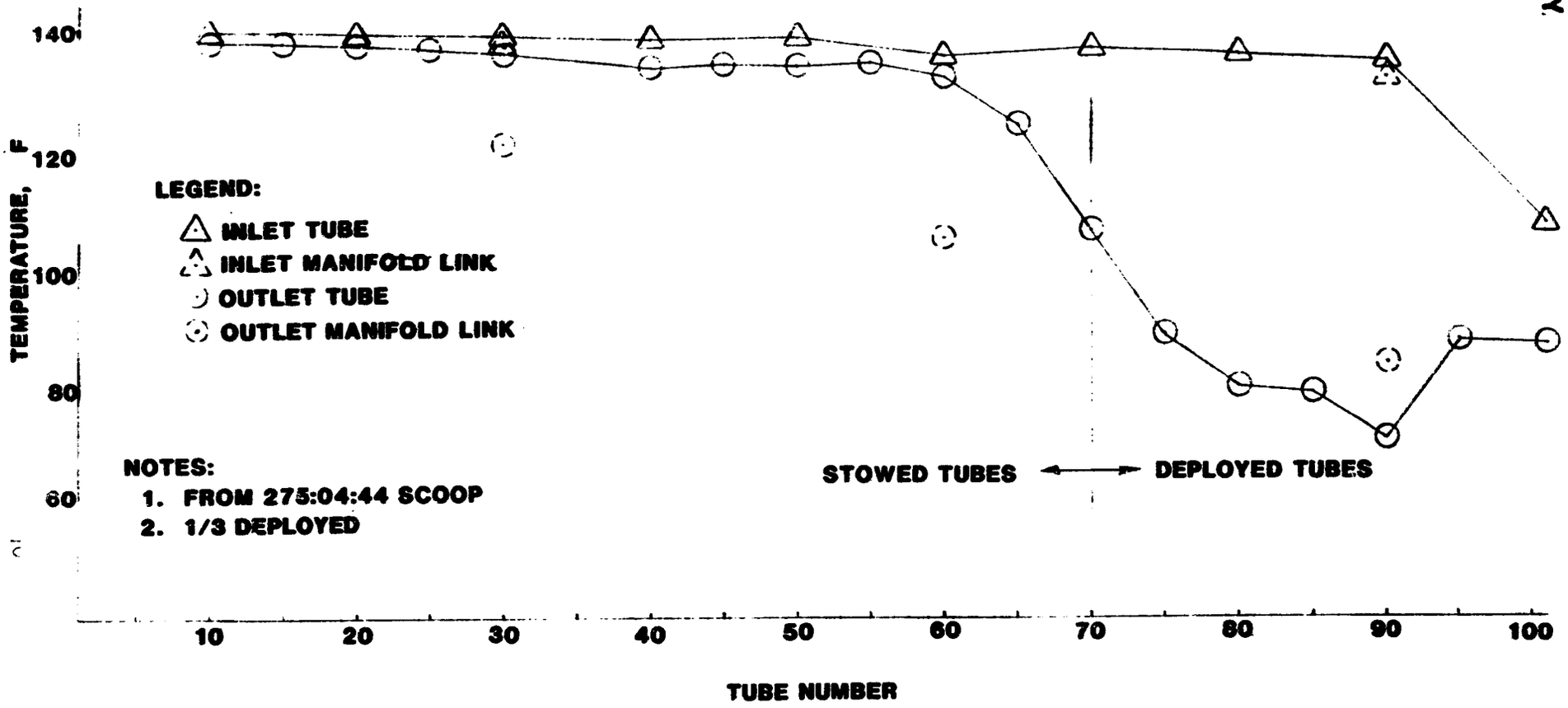

ORIGINAL PAGE IS
OF POOR QUALITY

FIGURE 5-15
HARD TUBE FLEXIBLE RADIATOR TEMPERATURES, T.P. 971

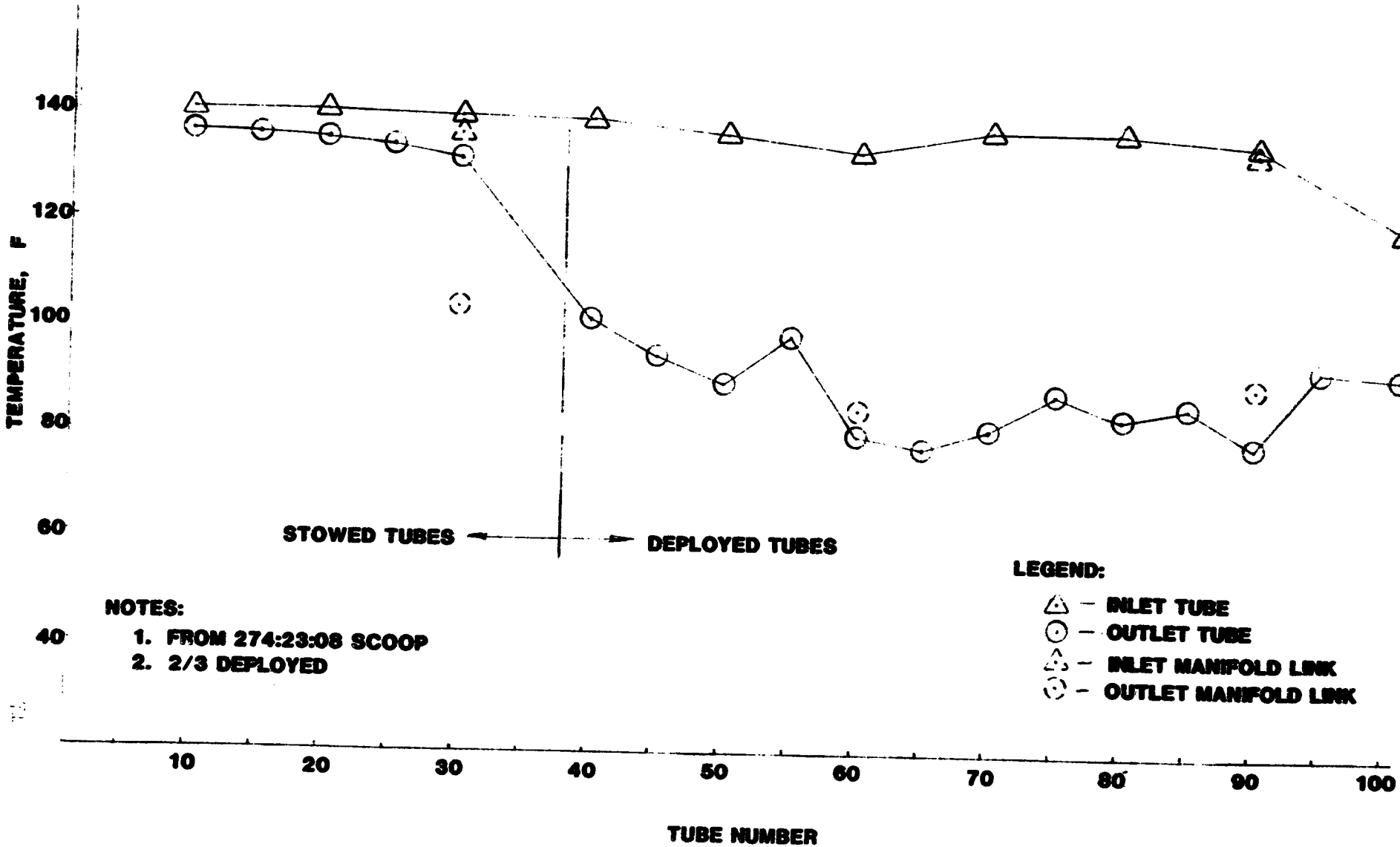

NOTES:
1. FROM 274:23:08 SCOOP
2. 2/3 DEPLOYED

ORIGINAL PAGE IS
OF POOR QUALITY

FIGURE 5-16
HARD TUBE FLEXIBLE RADIATOR TEMPERATURES, T.P. 964-2 #3

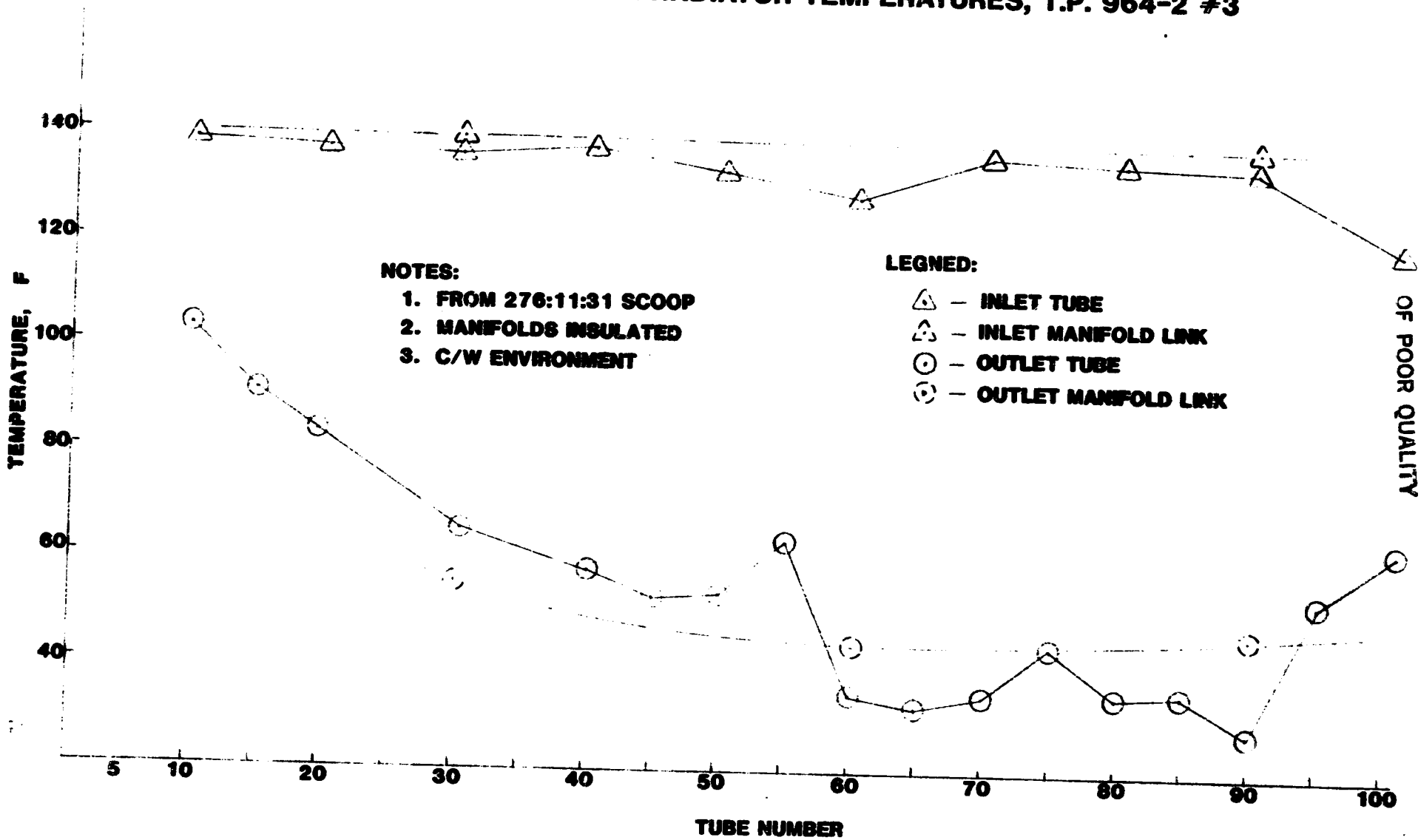

ORIGINAL PAGE IS
OF POOR QUALITY

FIGURE 5-17
HARD TUBE FLEXIBLE RADIATOR TEMPERATURES, T.P. 964-2 #4

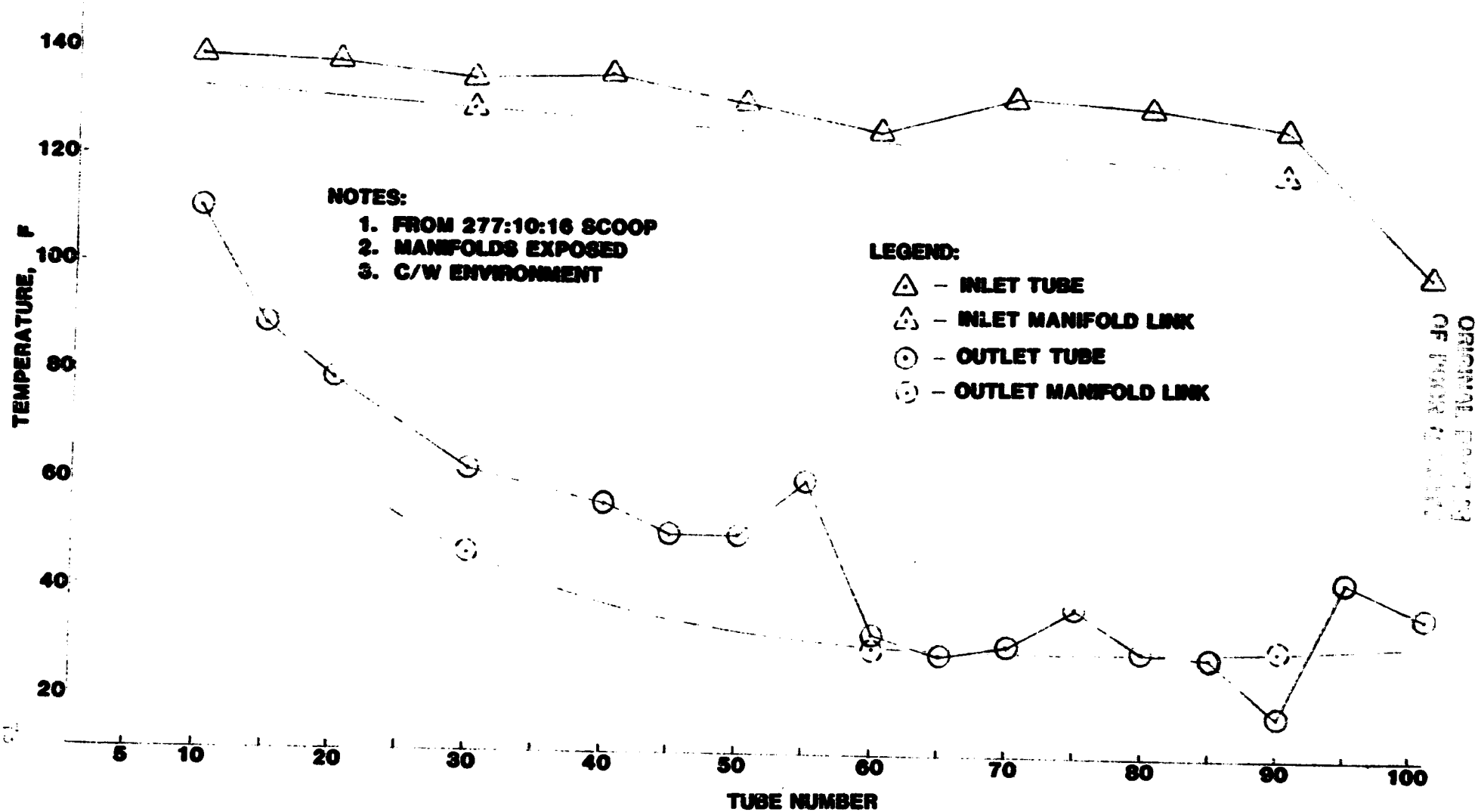

ORIGINAL PAGE IS OF POOR QUALITY

are less than the inlet side tube temperatures heated by the transport fluid. The radiation and conduction linking between the inlet manifold bellows and the interior of the link boxes is smaller than the radiation linking between the box exterior and the chamber environments, therefore the box exterior cools below the tube temperatures. Tube temperature 101 is apparently influenced by the proximity of the panel-tip spring box.

The outlet-side tube temperatures generally increase (i.e. are warmer) from the shortest tube near the panel tip to the longest tube attached to the storage drum as shown in Figures 5-16 and 5-17. The bucket part of these curves between tubes 60 through 90 indicate these tubes have less flow than intended. The manifold link box temperatures are warmer than the outlet tube temperatures for tubes 60 through 90 when the link boxes are insulated and approximately the same temperature when the link boxes are exposed to the cold wall environment. If the flow tubes had the design flowrates, the link box in a cold wall environment will always be at a lower temperature than the tube temperatures. A complete understanding of the test data will require a detail thermal model of the radiator panel.

The hard tube flexible radiator test data indicate a pressure drop of 30 psi at 300 pph, 70°F. Pressure drop for the radiator panel only was calculated to be 6.5 psi which would mean the pressure drop in the inlet and outlet flex hose fluid transfer devices is 23.5 psi. Each device uses 15 feet of 1/4" I.D. metal flex hoses wrapped on a 4.5 inch diameter tube. Total fluid flow is carried through these flex hoses. Flex hose ΔP is difficult to estimate analytically especially if the hose contains bends, however 11.75 psi per wrapped hose is not considered extraordinary for this hose configuration. Fluid swivels substituted for the flex hose devices would significantly reduce the hard tube radiator pressure drop.

5.2.2 Deployment/Retraction System

The hard tube flexible radiator deployment system required special test hardware to raise and lower the storage drum as the radiator was retracted or deployed. This special test hardware was a screwjack and motor with 10 rpm gearbox. To maintain a horizontal panel deployment during the test, the radiator structure rotated about point "A" (Figure 5-18) to keep the panel wraps remaining on the storage drum against roller "B". Raising and lowering the storage drum was accomplished by attaching the drum by cable to the screwjack traveler. The rates of panel deployment and screwjack travel

ORIGINAL PAGE IS
OF POOR QUALITY

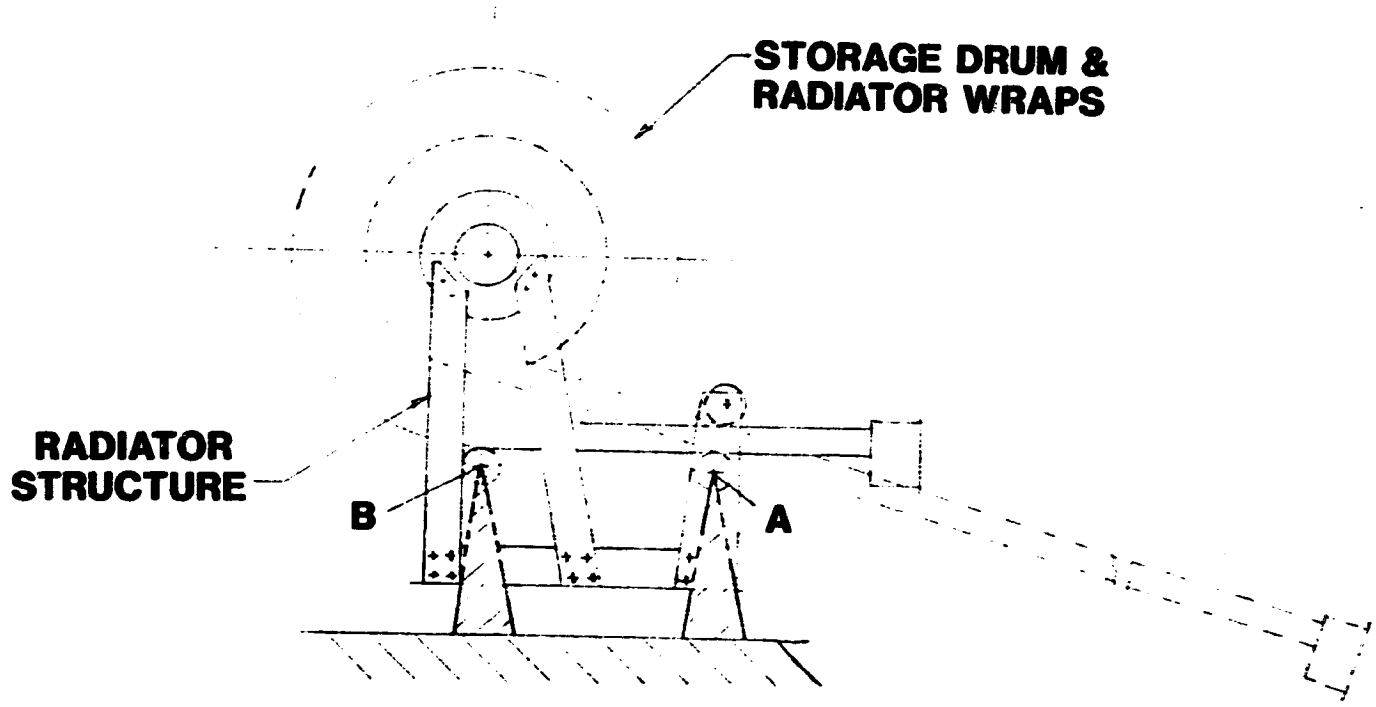

FIGURE 5-18 HARD TUBE FLEXIBLE RADIATOR TEST SUPPORT HARDWARE

were fairly well synchronized initially but became increasingly unsynchronized during the progress of the test. Mention has been made previously of the fin damage by the nylon deployment rope. The deployment rope also bent (believe to have occurred when the storage drum froze) the flow tubes which reduced the drum diameter the rope and succeeding panel wraps rolled up on. A smaller wind-up diameter alters the deployment speed and thus the synchronization. An operations procedure was established which involves temporarily negating the screwjack limit switches to allow full panel deployment and the test continued.

A phenomenon occurred concerning the outlet manifold links which remains unexplained. The manifold links developed a sinusoidal wave (maximum amplitude - 1 foot) shape along the manifold. This "kinking" of the outlet manifold occurred on the first day of testing and reoccurred in approximately 80% of all full panel deployments. The inlet manifold was unaffected and remained straight during all the deployments. During retraction the panel "kinked" outlet manifold straighten out each time and was rolled up on the storage drum. Several videotape records of the manifold "kinking" phenomenon were made. These may be useful in further investigations.

Inspection of the manifold links after the test revealed no binding or apparent cause of binding. It was originally speculated that a binding problem existed. The source of the outlet manifold kinking, it is related to the thermal vacuum environment. The link boxes rotate on a close tolerance stainless steel fluid tee which was lubricated with Molykote-Z. Molykote-Z is a vacuum compatible lubricant with very low outgassing characteristics.

6.0 CONCLUSIONS

The following main conclusions were reached from the testing on the two radiator panels:

(1) The soft tube radiator will reject the design heat load in the space environment.

(2) The high pressure drop observed for the soft tube radiator during the tests were caused by excessive corrosion inside the outboard manifold. Adequate surface treatment and storage procedures are needed to pervent this in the future.

(3) The hard tube radiator heat rejection was about 30% lower than expected at the design conditions. This is likely caused by damage to the fin during deployment and retraction.

(4) The soft tube radiator deployment/retraction system performed well except for some slight coning near the end of the test.

(5) The hard tube radiator deployment/retraction performed adequately except that binding occurred which caused high tension in the deployment cord which resulted in panel damage.

7.0 REFERENCES

1. Hixon, C. W., Development of a Prototype Flexible Radiator System - Final Report, Vought Corporation Report No. 2-30320/9R-52078.
2. Hixon, C. W., Design and Development of a Hard Tube Flexible Radiator System - Final Report, Vought Corporation Report No. 2-30320/0R-52416, dated 25 April 1980.
3. Rankin, J. G., et.al., Flexible Radiator Thermal Vacuum Test Requirements, NASA/JSC 16554, CSD-SH-168, dated 6 August 1980.
4. Rankin, J. G., et.al., Flexible Radiator Thermal Vacuum Test Plan, NASA/JSC 16555, CSD-SS-032, dated 9 September 1980.
5. Rankin, J. G. and Marshall, P., Flexible Radiator Thermal Vacuum Quick Look Summary, NASA/JSC dated October 1980.

APPENDIX A

FLEXIBLE RADIATOR TEST INSTRUMENTATION LIST

INSTRUMENTATION LIST KEY

HARD TUBE THERMOCOUPLE - MID

1st letter	H - HARD TUBE RADIATOR
2nd letter	F - FIN
	M - MANIFOLD
	T - TUBE
1st number	1 - Flow Tube Inlet
	2 - Flow Tube and Fin Centerline
	3 - Flow Tube Outlet
	4 - Inlet Manifold Link Box
	5 - Outlet Manifold Link Box
2nd number	0 - NOT A FIN T/C
	1 - INDICATES TUBE 101
	2,3,5,6,8 or 9 - Part of T/C Fin Location
3rd & 4th number	TUBE NUMBER (If 2nd number = 0)

Examples:

Hard Tube Radiator, Inlet Manifold Thermocouple Near Inlet of Flow Tube 30

HM4030

Hard Tube Radiator, Centerline Fin Thermocouple, .3 inches From Tube 60, Between Tube 60 and Tube 61

HF2603

SOFT TUBE THERMOCOUPLES - MID

1st letter	S - Soft Tube Radiator
2nd letter	F - Fin
	M - Manifold (trailing numbers not dimensionally significant)
	T - Tube
1st & 2nd numbers	Designates the Linear Position (in feet) from Drum End of the Deployed Radiator Panel
3rd & 4th numbers	Designates Tube Number of Tube Thermocouple or Next Lowest Tube Number of Fin Thermocouple

ORIGINAL PAGE IS OF POOR QUALITY

SEQ.	MID	DESCRIPTION	UNITS	RANGE
1	HR1000	INLET FLOW RATE	LB/HR	0 TO 1000
2	HP1000	INLET PRESSURE	PSIA	0 TO 100
3	HP1001	DELTA P IN/OUT	PSID	0 TO 50
4	HT0001	INLET TEMP	DEG F	-50 TO 150
5	HT0002	OUTLET TEMP	DEG F	-50 TO 150
6	HT1010	TUBE 10 INLET TEMP	DEG F	-200 TO 300
7	HT1020	TUBE 20 INLET TEMP	DEG F	-200 TO 300
8	HT1030	TUBE 30 INLET TEMP	DEG F	-200 TO 300
9	HT1040	TUBE 40 INLET TEMP	DEG F	-200 TO 300
10	HT1050	TUBE 50 INLET TEMP	DEG F	-200 TO 300
11	HT1060	TUBE 60 INLET TEMP	DEG F	-200 TO 300
12	HT1070	TUBE 70 INLET TEMP	DEG F	-200 TO 300
13	HT1080	TUBE 80 INLET TEMP	DEG F	-200 TO 300
14	HT1090	TUBE 90 INLET TEMP	DEG F	-200 TO 300
15	HT1101	TUBE 101 INLET TEMP	DEG F	-200 TO 300
16	HT3101	TUBE 101 OUTLET TEMP	DEG F	-200 TO 300
17	HT3095	TUBE 95 OUTLET TEMP	DEG F	-200 TO 300
18	HT3090	TUBE 90 OUTLET TEMP	DEG F	-200 TO 300
19	HT3085	TUBE 85 OUTLET TEMP	DEG F	-200 TO 300
20	HT3080	TUBE 80 OUTLET TEMP	DEG F	-200 TO 300
21	HT3075	TUBE 75 OUTLET TEMP	DEG F	-200 TO 300
22	HT3070	TUBE 70 OUTLET TEMP	DEG F	-200 TO 300
23	HT3065	TUBE 65 OUTLET TEMP	DEG F	-200 TO 300
24	HT3060	TUBE 60 OUTLET TEMP	DEG F	-200 TO 300
25	HT3055	TUBE 55 OUTLET TEMP	DEG F	-200 TO 300
26	HT3050	TUBE 50 OUTLET TEMP	DEG F	-200 TO 300
27	HT3045	TUBE 45 OUTLET TEMP	DEG F	-200 TO 300
28	HT3040	TUBE 40 OUTLET TEMP	DEG F	-200 TO 300
29	HT3035	TUBE 35 OUTLET TEMP	DEG F	-200 TO 300
30	HT3030	TUBE 30 OUTLET TEMP	DEG F	-200 TO 300
31	HT3025	TUBE 25 OUTLET TEMP	DEG F	-200 TO 300
32	HT3020	TUBE 20 OUTLET TEMP	DEG F	-200 TO 300
33	HT3015	TUBE 15 OUTLET TEMP	DEG F	-200 TO 300
34	HT3010	TUBE 10 OUTLET TEMP	DEG F	-200 TO 300
35	HT2090	TUBE 90 CENTER LINE TEMP	DEG F	-200 TO 300
36	HF2903	FIN 90.3 CENTER LINE TEMP	DEG F	-200 TO 300
37	HF2905	FIN 90.5 CENTER LINE TEMP	DEG F	-200 TO 300
38	HF2898	FIN 89.8 CENTER LINE TEMP	DEG F	-200 TO 300
39	HF2895	FIN 89.5 CENTER LINE TEMP	DEG F	-200 TO 300
40	HT2060	TUBE 60 CENTER LINE TEMP	DEG F	-200 TO 300
41	HF2603	FIN 60.3 CENTER LINE TEMP	DEG F	-200 TO 300
42	HF2605	FIN 60.5 CENTER LINE TEMP	DEG F	-200 TO 300
43	HF2598	FIN 59.8 CENTER LINE TEMP	DEG F	-200 TO 300
44	HF2595	FIN 59.5 CENTER LINE TEMP	DEG F	-200 TO 300
45	HT2030	TUBE 30 CENTER LINE TEMP	DEG F	-200 TO 300
46	HF2303	FIN 30.3 CENTER LINE TEMP	DEG F	-200 TO 300
47	HF2305	FIN 30.5 CENTER LINE TEMP	DEG F	-200 TO 300
48	HF2298	FIN 29.8 CENTER LINE TEMP	DEG F	-200 TO 300
49	HF2295	FIN 29.5 CENTER LINE TEMP	DEG F	-200 TO 300
50	HM4030	MANIFOLD 30 INLET TEMP	DEG F	-200 TO 300
51	HM4060	MANIFOLD 60 INLET TEMP	DEG F	-200 TO 300
52	HM4090	MANIFOLD 90 INLET TEMP	DEG F	-200 TO 300
53	HM5090	MANIFOLD 90 OUTLET TEMP	DEG F	-200 TO 300
54	HM5060	MANIFOLD 60 OUTLET TEMP	DEG F	-200 TO 300
55	HM5030	MANIFOLD 30 OUTLET TEMP	DEG F	-200 TO 300
56	SR1000	GLYCOL/H2O MASS FLOW RATE	LB/HR	0 TO 400
57	SP1000	INLET PRESSURE	PSIA	0 TO 100
58	SP1001	DELTA P IN/OUT	PSID	0 TO 50
59	S00011	OUTLET TEMP (PPT)	DEG F	-50 TO 150

ORIGINAL PAGE IS
OF POOR QUALITY

60	SO0012	OUTLET TEMP (IM T/C)	DEG F	-50 TO 150
61	SO0013	OUTLET TEMP (IM T/C)	DEG F	-50 TO 150
62	SI0001	INLET TEMP (PPT)	DEG F	-50 TO 150
63	SI0002	INLET TEMP (IM T/C)	DEG F	-50 TO 150
64	SI0003	INLET TEMP (IM T/C)	DEG F	-50 TO 150
65	SM0001	OB MANIFOLD TEMP	DEG F	-50 TO 150
66	SM0002	OB MANIFOLD TEMP	DEG F	-50 TO 150
67	ST0446	TUBE 46 AT 4 FEET TEMP	DEG F	-200 TO 300
68	SF0436	FIN 36.5 AT 4 FEET TEMP	DEG F	-200 TO 300
69	ST0430	TUBE 30 AT 4 FEET TEMP	DEG F	-200 TO 300
70	ST0421	TUBE 21 AT 4 FEET TEMP	DEG F	-200 TO 300
71	ST0417	TUBE 17 AT 4 FEET TEMP	DEG F	-200 TO 300
72	ST0414	TUBE 14 AT 4 FEET TEMP	DEG F	-200 TO 300
73	SF0413	FIN 13.5 AT 4 FEET TEMP	DEG F	-200 TO 300
74	ST0413	TUBE 13 AT 4 FEET TEMP	DEG F	-200 TO 300
75	ST0409	TUBE 9 AT 4 FEET TEMP	DEG F	-200 TO 300
76	ST0405	TUBE 5 AT 4 FEET TEMP	DEG F	-200 TO 300
77	SF0635	FIN 35.5 AT 6 FEET TEMP	DEG F	-200 TO 300
78	SF0614	FIN 14.5 AT 6 FEET TEMP	DEG F	-200 TO 300
79	ST0846	TUBE 46 AT 8 FEET TEMP	DEG F	-200 TO 300
80	SF0834	FIN 34.5 AT 8 FEET TEMP	DEG F	-200 TO 300
81	SF0815	FIN 15.5 AT 8 FEET TEMP	DEG F	-200 TO 300
82	ST0805	TUBE 5 AT 8 FEET TEMP	DEG F	-200 TO 300
83	ST1037	TUBE 37 AT 10 FEET TEMP	DEG F	-200 TO 300
84	SF1036	FIN 36.5 AT 10 FEET TEMP	DEG F	-200 TO 300
85	ST1036	TUBE 36 AT 10 FEET TEMP	DEG F	-200 TO 300
86	ST1030	TUBE 30 AT 10 FEET TEMP	DEG F	-200 TO 300
87	ST1021	TUBE 21 AT 10 FEET TEMP	DEG F	-200 TO 300
88	SF1013	FIN 13.5 AT 10 FEET TEMP	DEG F	-200 TO 300
89	SF1235	FIN 35.5 AT 12 FEET TEMP	DEG F	-200 TO 300
90	SF1214	FIN 14.5 AT 12 FEET TEMP	DEG F	-200 TO 300
91	ST1446	TUBE 46 AT 14 FEET TEMP	DEG F	-200 TO 300
92	SF1434	FIN 34.5 AT 14 FEET TEMP	DEG F	-200 TO 300
93	SF1415	FIN 15.5 AT 14 FEET TEMP	DEG F	-200 TO 300
94	ST1405	TUBE 5 AT 14 FEET TEMP	DEG F	-200 TO 300
95	SF1636	FIN 36.5 AT 16 FEET TEMP	DEG F	-200 TO 300
96	ST1630	TUBE 30 AT 16 FEET TEMP	DEG F	-200 TO 300
97	ST1621	TUBE 21 AT 16 FEET TEMP	DEG F	-200 TO 300
98	SF1613	FIN 13.5 AT 16 FEET TEMP	DEG F	-200 TO 300
99	SF1835	FIN 35.5 AT 18 FEET TEMP	DEG F	-200 TO 300
100	ST1815	TUBE 15 AT 18 FEET TEMP	DEG F	-200 TO 300
101	SF1814	FIN 14.5 AT 18 FEET TEMP	DEG F	-200 TO 300
102	ST1814	TUBE 14 AT 18 FEET TEMP	DEG F	-200 TO 300
103	ST2046	TUBE 46 AT 20 FEET TEMP	DEG F	-200 TO 300
104	ST2042	TUBE 42 AT 20 FEET TEMP	DEG F	-200 TO 300
105	ST2038	TUBE 38 AT 20 FEET TEMP	DEG F	-200 TO 300
106	ST2035	TUBE 35 AT 20 FEET TEMP	DEG F	-200 TO 300
107	SF2034	FIN 34.5 AT 20 FEET TEMP	DEG F	-200 TO 300
108	ST2034	TUBE 34 AT 20 FEET TEMP	DEG F	-200 TO 300
109	ST2030	TUBE 30 AT 20 FEET TEMP	DEG F	-200 TO 300
110	SF2015	FIN 15.5 AT 20 FEET TEMP	DEG F	-200 TO 300
111	ST2005	TUBE 5 AT 20 FEET TEMP	DEG F	-200 TO 300
112	ST2221	TUBE 21 AT 22 FEET TEMP	DEG F	-200 TO 300
113	ST2446	TUBE 46 AT 24 FEET TEMP	DEG F	-200 TO 300
114	ST2430	TUBE 30 AT 24 FEET TEMP	DEG F	-200 TO 300
115	ZA1001	PROJECTED AREA ST	SQ FT	0 TO 100
116	ZA1002	RADIATING AREA ST	SQ FT	0 TO 200
117	ZA0001	PROJECTED AREA HT	SQ FT	0 TO 100
118	ZA0002	RADIATING AREA HT	SQ FT	0 TO 200
119	ZC1001	CP OF GLYCOL/H2O	B/#-F	0.4 TO 0.8

ORIGINAL PAGE IS
OF POOR QUALITY

120	ZC1033	SUM T**4 1/3	DEG R4	1E10 - 1E12
121	ZC1067	SUM T**4 2/3	DEG R4	1E10 - 1E12
122	ZC1100	SUM T**4 3/3	DEG R4	1E10 - 1E12
123	ZC9001	CP OF FREON-21	B/#-F	0.2 TO 0.3
124	ZC9033	SUM T**4 1/3	DEG R4	1E10 - 1E12
125	ZC9067	SUM T**4 2/3	DEG R4	1E10 - 1E12
126	ZC9100	SUM T**4 3/3	DEG R4	1E10 - 1E12
127	ZD1000	ST DEPLOYMENT CODE	NONE	0 TO 3
128	ZD9000	HT DEPLOYMENT CODE	NONE	0 TO 3
129	ZE1000	AVE FIN EFF ST	NONE	0 TO 1.0
130	ZE9000	AVE FIN EFF HT	NONE	0 TO 1.0
131	ZL1100	DEPLOYED LENGTH ST	FEET	0 TO 27
132	ZL9100	DEPLOYED LENGTH HT	FEET	0 TO 25
133	ZQ1001	FLUID Q REMOVED ST	BTU/HR	0 TO 25000
134	ZQ1002	TOTAL RADIATED Q ST	BTU/HR	0 TO 30000
135	ZQ1003	TOTAL ABSORBED Q ST	BTU/HR	0 TO 22000
136	ZQ1004	NET Q REJECTED ST	BTU/HR	0 TO 25000
137	ZQ1005	FLOOR Q ABSORBED ST	BTU/HR	0 TO 1500
138	ZQ1006	LAMP Q ABSORBED ST	BTU/HR	0 TO 20000
139	ZQ1100	AVE ABSORBED FLUX ST	B/H-SF	0 TO 200
140	ZQ9001	FLUID Q REMOVED HT	BTU/HR	0 TO 25000
141	ZQ9002	TOTAL RADIATED Q HT	BTU/HR	0 TO 30000
142	ZQ9003	TOTAL ABSORBED Q HT	BTU/HR	0 TO 22000
143	ZQ9004	NET Q REJECTED HT	BTU/HR	0 TO 25000
144	ZQ9005	FLOOR Q ABSORBED HT	BTU/HR	0 TO 1500
145	ZQ9006	LAMP Q ABSORBED HT	BTU/HR	0 TO 20000
146	ZQ9100	AVE ABSORBED FLUX HT	B/H-SF	0 TO 200
147	ZR1001	ST RADIOMETER	B/H-SF	0 TO 200
148	ZR1002	ST RADIOMETER	B/H-SF	0 TO 200
149	ZR1003	ST RADIOMETER	B/H-SF	0 TO 200
150	ZR1004	ST RADIOMETER	B/H-SF	0 TO 200
151	ZR1005	ST RADIOMETER	B/H-SF	0 TO 200
152	ZR1006	ST RADIOMETER	B/H-SF	0 TO 200
153	ZR1007	ST RADIOMETER	B/H-SF	0 TO 200
154	ZR1008	ST RADIOMETER	B/H-SF	0 TO 200
155	ZR1009	ST RADIOMETER	B/H-SF	0 TO 200
156	ZR1010	ST RADIOMETER	B/H-SF	0 TO 200
157	ZR1011	ST RADIOMETER	B/H-SF	0 TO 200
158	ZR1012	ST RADIOMETER	B/H-SF	0 TO 200
159	ZR9001	HT RADIOMETER	B/H-SF	0 TO 200
160	ZR9002	HT RADIOMETER	B/H-SF	0 TO 200
161	ZR9003	HT RADIOMETER	B/H-SF	0 TO 200
162	ZR9004	HT RADIOMETER	B/H-SF	0 TO 200
163	ZR9005	HT RADIOMETER	B/H-SF	0 TO 200
164	ZR9006	HT RADIOMETER	B/H-SF	0 TO 200
165	ZR9007	HT RADIOMETER	B/H-SF	0 TO 200
166	ZR9008	HT RADIOMETER	B/H-SF	0 TO 200
167	ZR9009	HT RADIOMETER	B/H-SF	0 TO 200
168	ZR9010	HT RADIOMETER	B/H-SF	0 TO 200
169	ZR9011	HT RADIOMETER	B/H-SF	0 TO 200
170	ZR9012	HT RADIOMETER	B/H-SF	0 TO 200
171	ZS1000	SINK TEMPERATURE ST	DEG F	-300 TO 50
172	ZS9000	SINK TEMPERATURE HT	DEG F	-300 TO 50
173	ZT1000	AVE TUBE TEMP ST	DEG F	-50 TO 150
174	ZT1001	GLYCOL/H2O DELTA T	DEG F	0 TO 150
175	ZT0436	EQUIV TUBE TEMP	DEG F	-50 TO 150
176	ZT0635	EQUIV TUBE TEMP	DEG F	-50 TO 150
177	ZT0614	EQUIV TUBE TEMP	DEG F	-50 TO 150
178	ZT0834	EQUIV TUBE TEMP	DEG F	-50 TO 150
179	ZT0815	EQUIV TUBE TEMP	DEG F	-50 TO 150

ORIGINAL PAGE IS
OF POOR QUALITY

180	ZT1013	EQUIV TUBE TEMP	DEG F	-50 TO 150
181	ZT1235	EQUIV TUBE TEMP	DEG F	-50 TO 150
182	ZT1214	EQUIV TUBE TEMP	DEG F	-50 TO 150
183	ZT1434	EQUIV TUBE TEMP	DEG F	-50 TO 150
184	ZT1415	EQUIV TUBE TEMP	DEG F	-50 TO 150
185	ZT1636	EQUIV TUBE TEMP	DEG F	-50 TO 150
186	ZT1613	EQUIV TUBE TEMP	DEG F	-50 TO 150
187	ZT1835	EQUIV TUBE TEMP	DEG F	-50 TO 150
188	ZT2015	EQUIV TUBE TEMP	DEG F	-50 TO 150
189	ZT8100	AVE CHAMBER WALL TEMP	DEG F	-300 TO 100
190	ZT8200	AVE CHAMBER FLOOR TEMP	DEG F	-300 TO 100
191	ZT9000	AVE TUBE TEMP HT	DEG F	-50 TO 150
192	ZT9001	FREON-21 DELTA T	DEG F	0 TO 150
193	ZX1141	TEMP RATIO ST TUBE 14	NONE	0 TO 1.0
194	ZX1151	TEMP RATIO ST TUBE 15	NONE	0 TO 1.0
195	ZX1131	TEMP RATIO ST TUBE 13	NONE	0 TO 1.0
196	ZX1142	TEMP RATIO ST TUBE 14	NONE	0 TO 1.0
197	ZX1361	TEMP RATIO ST TUBE 36	NONE	0 TO 1.0
198	ZX1371	TEMP RATIO ST TUBE 37	NONE	0 TO 1.0
199	ZX1341	TEMP RATIO ST TUBE 34	NONE	0 TO 1.0
200	ZX1351	TEMP RATIO ST TUBE 35	NONE	0 TO 1.0
201	ZX1000	AVE TEMP RATIO ST	NONE	0 TO 1.0
202	ZX1033	AVE TEMP RATIO 1/3 ST	NONE	0 TO 1.0
203	ZX1067	AVE TEMP RATIO 2/3 ST	NONE	0 TO 1.0
204	ZX1100	AVE TEMP RATIO 3/3 ST	NONE	0 TO 1.0
205	ZX9000	AVE TEMP RATIO HT	NONE	0 TO 1.0
206	ZX9033	AVE TEMP RATIO 1/3 HT	NONE	0 TO 1.0
207	ZX9067	AVE TEMP RATIO 2/3 HT	NONE	0 TO 1.0
208	ZX9100	AVE TEMP RATIO 3/3 HT	NONE	0 TO 1.0
209	ZX9301	TEMP RATIO HT TUBE 30	NONE	0 TO 1.0
210	ZX9302	TEMP RATIO HT TUBE 30	NONE	0 TO 1.0
211	ZX9601	TEMP RATIO HT TUBE 60	NONE	0 TO 1.0
212	ZX9602	TEMP RATIO HT TUBE 60	NONE	0 TO 1.0
213	ZX9901	TEMP RATIO HT TUBE 90	NONE	0 TO 1.0
214	ZX9902	TEMP RATIO HT TUBE 90	NONE	0 TO 1.0
215	ZE9301	FIN EFFICIENCY TUBE 30	NONE	0 TO 1.0
216	ZE9302	FIN EFFICIENCY TUBE 30	NONE	0 TO 1.0
217	ZE9601	FIN EFFICIENCY TUBE 60	NONE	0 TO 1.0
218	ZE9602	FIN EFFICIENCY TUBE 60	NONE	0 TO 1.0
219	ZE9901	FIN EFFICIENCY TUBE 90	NONE	0 TO 1.0
220	ZE9902	FIN EFFICIENCY TUBE 90	NONE	0 TO 1.0
221	ZE1141	FIN EFFICIENCY TUBE 14	NONE	0 TO 1.0
222	ZE1151	FIN EFFICIENCY TUBE 15	NONE	0 TO 1.0
223	ZE1131	FIN EFFICIENCY TUBE 13	NONE	0 TO 1.0
224	ZE1142	FIN EFFICIENCY TUBE 14	NONE	0 TO 1.0
225	ZE1361	FIN EFFICIENCY TUBE 36	NONE	0 TO 1.0
226	ZE1371	FIN EFFICIENCY TUBE 37	NONE	0 TO 1.0
227	ZE1341	FIN EFFICIENCY TUBE 34	NONE	0 TO 1.0
228	ZE1351	FIN EFFICIENCY TUBE 35	NONE	0 TO 1.0
229	~~ZT7014~~	TROLLEY POSITION 1/4	NONE	0 OR 1
230	~~ZT7014~~	TROLLEY POSITION 1/2	NONE	0 OR 1
231	~~ZT7015~~	TROLLEY POSITION 1/3	NONE	0 OR 1
232	~~ZT7016~~	TROLLEY POSITION 1/4	NONE	0 OR 1
233	SP1100	ST INFLATION PRESSURE	PSIA	0 TO 60
234	ST3001	WIRE TEMPERATURE	DEG F	-200 TO 300
235	ST3002	WIRE TEMPERATURE	DEG F	-200 TO 300
236	ST3003	WIRE TEMPERATURE	DEG F	-200 TO 300
237	ZF1000	ST FLOW RATE	LB/HR	0 TO 400
238	ZF9000	HT FLOW RATE	LB/HR	0 TO 1000

NEXT PARAMETER = 239

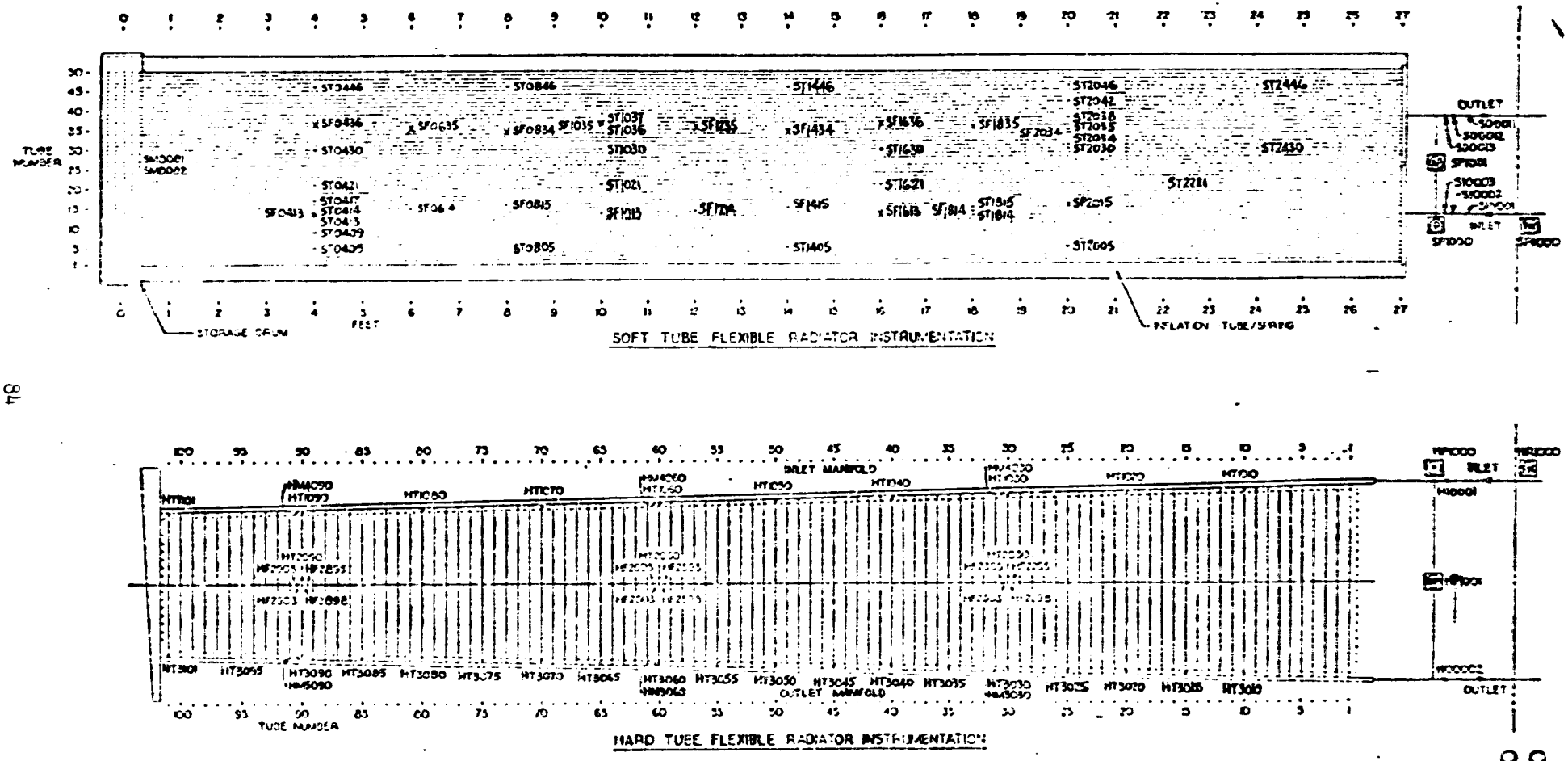

FIGURE 6.1 INSTRUMENTATION LAYOUT

ORIGINAL PAGE IS
OF POOR QUALITY

RADIOMETERS

Twenty-four radiometers (twelve for each radiator) were installed to measure the radiant flux of the IR lamp arrays. Twenty of these radiometers located around the panel periphery measured the flux directly while the other four located beneath the panel measured the flux transmitted through the radiators plus that emitted by the bottom radiator surfaces. The radiometer's calibration range extended between 0 and 200 BTU's per hour per square foot. The approximate location of the radiometers is shown in the Figure.

ORIGINAL PAGE IS
OF POOR QUALITY

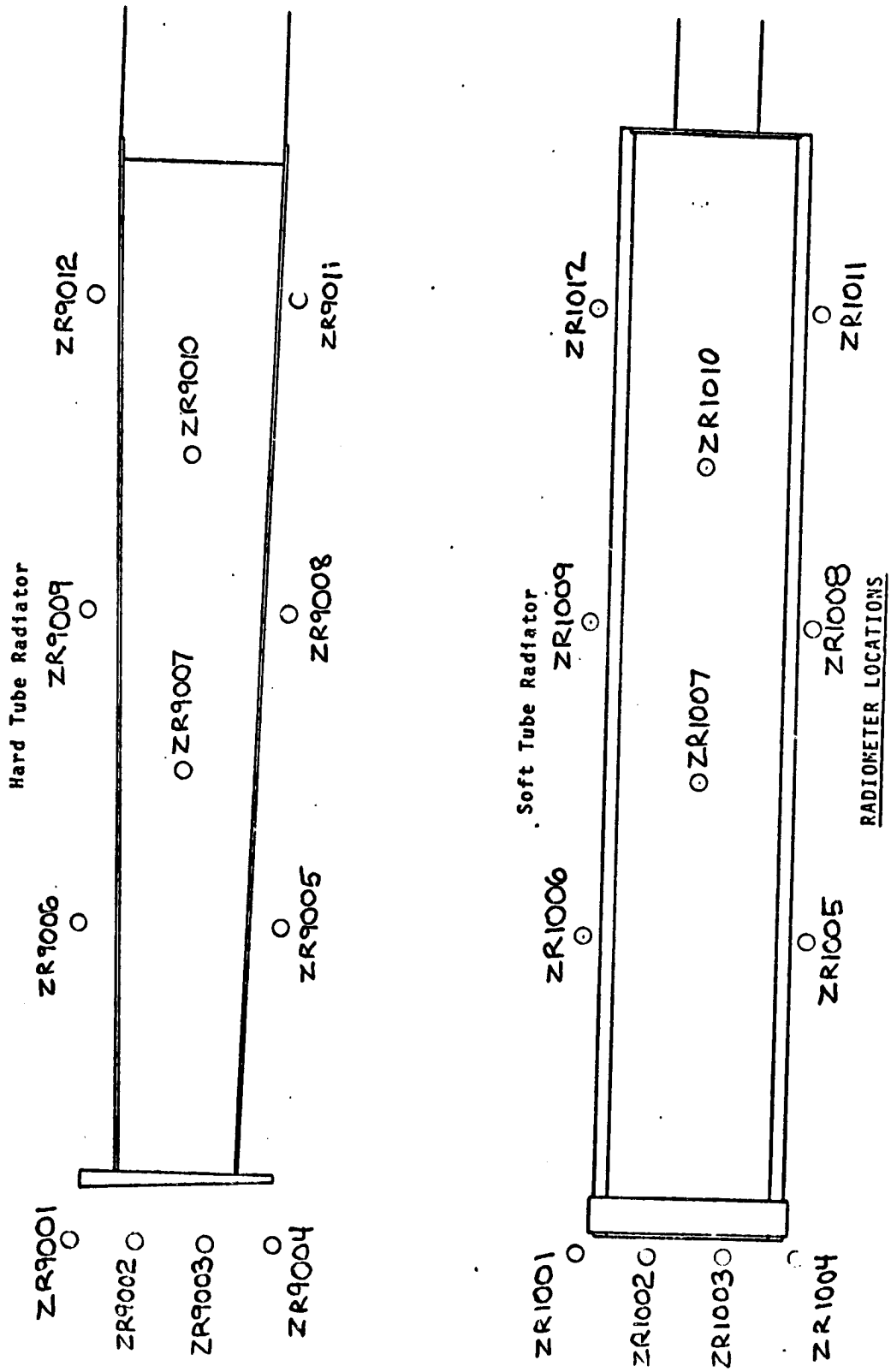

APPENDIX B

FLEXIBLE RADIATOR TEST TIMELINE NOTES

ORIGINAL PAGE IS
OF POOR QUALITY

FLEXIBLE RADIATOR TEST TIMELINE

NASA/JSC CHAMBER A

TIME	ACTIVITY/COMMENT
00 13 00	BEGIN CHAMBER A PUMPDOWN
13 03	VERIFIED BOTH RADIATORS FULLY RETRACTED
13 50	SOFT TUBE (ST) IMMERSION THERMOCOUPLES NOT READING
20 20	ST IMMERSION T/C NOT PLUGGED IN. DECISION TO PROCEED WITH PLATIUM THERMISTORS ONLY
21 57	CHAMBER @ 1.0 TORR
22 21	HARD TUBE (HT) FLOW METER READING 33 PPH (PUMP OFF)
22 25	FLOW STARTED TO BOTH RADIATORS-75PPH (ST),150 PPH (HT)
22 50	ST ^P TRANSDUCER READING OFF SCALE
22 55	LN2 FLOW TO COLD WALLS STARTED
23 00	VISUAL CHECK - ST PANEL FULLY DEPLOYED
00 34	ST FULLY DEPLOYED & FREEZING (-120 TO -130 F) GN2 DEPLOYMENT BENCH/PI-2= 7 PSIA
02 00	INSTALLED VACUUM PUMP TO GN2 BENCH/PI-2= 3 PSIA
03 05	CHAMBER @ 1E-3 TORR
04 50	ST IR LAMPS @ 10 'BITS' PI-2= 2 PSIA
05 50	CHAMBER STATUS - TWALL =-240 F. TFLOOR = -234 F ST IR LAMPS @20'BITS' PI-2=1.3 PSIA
06 42	ST IR LAMPS @ 40 'BITS' PI-2 = 1.0 PSIA
07 45	ST RADIATOR RETRACTED 2 FT FROM FULLY DEPLOYED
07 55	CHAMBER @ 4.5E-4 TORR
09 28	ST RADIATOR STILL 2/3 DEPLOYED
09 55	ST RADIATOR 1/2 DEPLOYED
10 45	ST RADIATOR LESS THAN 1/3 DEPLOYED F-21 OPERATOR NOTES ST RETURN FLOW HI VAI
11 25	ST RAD. STILL DEPLOYED 6.7 FT.
11 53	ST GN2 BENCH RESTORED TO PRETEST STATUS NEW K-BOTTLE INSTALLED
12 00	CHAMBER @ 2.4E-4 TORR
12 16	ST FLOW , W=236 PPH, P(IN)=92.2 PSIA
12 18	ST FLOW , W=290 PPH. GN2 RELIEF VALVE OPENED
12 22	ST FLOW , W=250 PPH. P(IN)=92.7 PSIA. T(IN)=101.7 F
12 35	ST RAD. STILL DEPLOYED 6.7 FT
13 05	ST IR LAMPS TO 20 'BITS'
13 28	ST FLOW , W=160 PPH. P(IN)=32 PSIA
14 00	SUSPECT R2 ON GN2 BENCH LEAKING
14 28	ST FLOW , W=245 PPH. P(IN)=INV. RELIEF VALVE OPENED
14 29	ST FLOW , W=155 PPH. P(IN)=80.8 PSIA. T(IN)=102.8 F
14 42	ST FLOW , W=213 PPH, P(IN)=96.3 PSIA
15 19	ST IR LAMPS OFF
15 36	SWITCHING HE ZONES IN CHAMBER MAY START REPRESS
15 55	CHAMBER PRESSURE=3E-4 TORR ST T(IN)=101.5 F T(OUT)=78.3 F HT T(IN)= 96.5 F T(OUT)=86.0 F
17 30	CHAMBER @ 4E-5 TORR "BEGIN VACUUM TESTING"
19 00	ST IR LAMPS TO 40 'BITS'
19 25	CHAMBER TEMPS TWALL=-288 F. TFLOOR=-237 F
20 00	ST RAD 1/3 DEPLOYED LDEP=8.1 FT
20 50	ST IR LAMPS OFF START TP 108 W/COLD WALLS W=79 PPH. T(IN)=76.0 F. T(OUT)=25.4

ORIGINAL PAGE IS
OF POOR QUALITY

TIME	ACTIVITY/COMMENT
261 23 43	ST TP108 W/COLD WALLS ABORTED- UNABLE TO MAINTAIN
23 45	HT TP901 COMPLETE W=150 PPH, T(IN)=70 F
23 58	ST IR LAMPS TO 40 'BITS'
262 01 00	ST W=152 PPH, T(IN)=91 F, T(OUT)=84 F
01 29	ST FLOW SHUT OFF - ATTEMPTING RETRACTION
01 35	ST RETRACTION START
01 46	HT TP 902A COMPLETE W=230 PPH, T(IN)=74 F
02 28	ST RADIATOR RETRACTED @ 2 FT IN SUDDEN MOVE
03 10	HT TP904 COMPLETE W=100 PPH, T(IN)=72 F
05 23	HT TP904A COMPLETE W=450 PPH, T(IN)=78 F
05 35	ST RADIATOR STILL DEPLOYED @ 5 FT
05 46	ST W=185 PPH, T(IN)=78 8 F, T(OUT)=113 2 F
05 48	HT W=601 PPH, T(IN)=78 6 F, P(IN)=192 PSIA
06 42	ST RADIATOR RETRACTION SCRUBBED
06 43	ST RADIATOR @ 8 1 FT
06 57	ST W=140 PPH, T(IN)=109 6 F, T(OUT)=103 3 F
07 20	HT T 906 COMPLETE W=600 PPH, T(IN)=70 F
07 30	ST RADIATOR READJUSTED TO 8 1 FT
09 16	ST TP108A COMPLETE W=150 PPH, T(IN)=126 F
09 38	HT W=295 PPH, T(IN)=141 F
10 18	HT TP907 COMPLETE W=300 PPH, T(IN)=140 F
10 19	ST TP108B COMPLETE W=180 PPH, T(IN)=127 F
10 35	REQUESTED ZERO TSINK ON ST (UNCALIBRATED)
11 10	ST TP108C COMPLETE W=180 PPH, T(IN)=132 F
11 44	ST TP109 COMPLETE W=100 PPH, T(IN)=133 F
12 01	HT TP905 COMPLETE W=500 PPH, T(IN)=140 F
12 22	ST TP110 COMPLETE W=100 PPH, T(IN)=109 F
13 30	HT W=159 PPH, T(IN)=129 5 F
13 54	HT W=150 PPH, T(IN)=148 F
13 56	HT RADIATOR DEPLOYMENT BEGINS
13 59	HT MAX DEPLOY LIGHT ON @ 20 9 FT
14 55	ST W=94 PPH, T(IN)=62 F
16 08	HT TP917 COMPLETE W=100 PPH, T(IN)=144 F
16 29	ST TP111A (COMPLETE W=100 PPH, T(IN)=61 F
	(ST TSINK UNCALIBRATED)
18 18	HT TP920 COMPLETE W=500 PPH, T(IN)=141 F
19 55	HT TP919 COMPLETE W=500 PPH, T(IN)=70 F
20 20	ST (ACTUALATED TSINK = 0 F, BEGIN TP111B
21 45	ST TP111B (COMPLETE W=95 PPH, T(IN)=61 F
22 09	HT TP918 COMPLETE W=300 PPH, T(IN)= 71 F
22 50	ST RADIATOR DEPLOYMENT W=100 PPH, T(IN)=90 F
23 04	ST RADIATOR FULLY DEPLOYED @ 27 25 FT
23 25	VIDEOTAPED HT MANIFOLD LINKS
23 30	HT TP907 (IR LAMP CALIBRATION) BEGINS
	(CHAMBER LIGHTS OFF)
23 59	ST TP121 COMPLETE W=100 PPH, T(IN)=103 F

ORIGINAL PAGE IS
OF POOR QUALITY

00:02	ST TP122 COMPLETE W=115 PPH, T(IN)=130 F
02:45	HT TP907 COMPLETE (IR LAMP CALIBRATION)
02:48	ST TP123 COMPLETE W=200 PPH, T(IN)=128 F
02:50	HT CALCULATED TSINK = 0 F, BEGIN TP924
03:26	ST TP124 COMPLETE W=50 PPH, T(IN)=140 F
03:36	CHAMBER PRESSURE @ 1.6E-5 TORR
03:38	HT TP924 COMPLETE W=700 PPH, T(IN)=100 F
04:47	ST TP125 COMPLETE W=110 PPH, T(IN)=81 F
04:56	HT TP923 COMPLETE W=300 PPH, T(IN)=71 F
05:43	HT TP927 COMPLETE W=500 PPH, T(IN)=70 F
06:00	ST TP126 COMPLETE W=155 PPH, T(IN)=82 F
07:08	HT TP926 COMPLETE W=500 PPH, T(IN)=139 F
07:10	ST RADIATOR RETRACTION BEGINS W=50 PPH
07:55	HT TP925 COMPLETE W=300 PPH, T(IN)=139 F
09:02	HT TP970 COMPLETE W=150 PPH, T(IN)=136 F
10:08	ST RADIATOR RETRACTED TO 2/3 DEPLOY @ 16.2 FT.
10:59	ST TP113 COMPLETE W=57 PPH, T(IN)=80 F
11:33	ST RADIATOR RESTORED TO 16.2 FT. (HAD RETRACTED APPROX. 1 FT.)
12:00	ST TP115 COMPLETE W=100 PPH, T(IN)=100 F
12:15	VIDEOTAPED HT MANIFOLD KINKS W=160 PPH, T(IN)=140 F
12:57	ST TP114 COMPLETE W=50 PPH, T(IN)=100 F
12:58	HT CONTROL PANEL ON; MAX DEPLOY LIGHT ON W=350 PPH, T(IN)=107 F, T(OUT)=65 F
13:01	HT MAX RETRACT LIGHT ON POWER OFF
13:04	HT CONTROL PANEL ON, MAX RETRACT LIGHT ON
13:06	HT MAX DEPLOY LIGHT ON, NOT FULLY DEPLOYED
13:12	FURTHER DEPLOYMENT ABORTED, RETRACTED PANEL
13:16	HT MAX RETRACTED LIGHT ON
13:19	HT SCREW JACK REPOSITIONED, DEPLOY PANEL
13:21	HT MAX DEPLOY LIGHT ON, NOT FULLY DEPLOYED
13:24	FURTHER DEPLOYMENT ABORTED
13:27	HT MAX RETRACT LIGHT ON, POWER OFF (DEP MTR T=64 F, SCJ MTR T=57 F)
13:37	HT IR LAMPS OFF
13:38	ST IR LAMPS TO FULL POWER SETTING
13:50	ST RADIATOR CONFIGURED TO RETRACT
13:58	ST IR LAMPS OFF
14:00	CHAMBER REPRESS BEGINS
14:55	ST IR LAMPS ON (FULL POWER) PANEL FROZEN
16:28	ST FULLY RETRACTED-VISUAL CHECK
18:00	CHAMBER REPRESS COMPLETE, FLOW TO TEST ARTICLES TURNED OFF

ORIGINAL PAGE IS
OF POOR QUALITY

DURING THE WEEK OF SEPTEMBER 22 THRU 26, 1980

THE FOLLOWING CHANGES WERE INCORPORATED:

ST IMMERSION T/C'S WERE PLUGGED IN

ST DELTA P TRANSDUCER WAS REPLACED WITH ONE OF HIGHER RANGE

ST DELTA P PERFORMANCE MAPPED BOTH DEPLOYED AND RETRACTED

ST DEPLOYMENT TEST SUPPORT EQUIPMENT WAS MODIFIED:
INCREASED INLET TUBING TO .5" FROM .25"
ADDED SOLENOID VALVE TO AID RETRACTION
ADDED HEATERS TO REMAINING .25" LINE

ST INFLATION TUBE LEAKS REPAIRED (OUTLET SIDE)

HT INLET PRESSURE TRANSDUCER VERIFIED FOR SIGNAL

HT DEPLOYMENT SYSTEM WAS SYNCHRONIZED FOR INCREASED DEPLOYMENT LENGTH

HT RADIATOR WAS DEPLOYED/RETRACTED TEN(10) TIMES

ST RADIATOR WAS DEPLOYED/RETRACTED THREE(3) TIMES

FLEX SOFTWARE WAS MODIFIED TO PROVIDE INCREASED RELIABILITY

OF POOR QUALITY

TIME	ACTIVITY/COMMENT
00:30	ST RADIATOR DEPLOYED/RETRACTED - NO ADJUSTMENT
01:30	CHAMBER DOOR CLOSED - PUMPDOWN BEGINS
01:40	ST INFLATION TUBES OPENED TO CHAMBER THRU SOLENOID DUMP VALVE
01:45	TEST ARTICLE FLOW STARTED W=75 PPH(ST), W=150 PPH(HT)
02:00	ST RADIATOR REMAINS RETRACTED PI-2=10 PSIA
02:26	CHAMBER PRESSURE @ 250 TORR - ST STILL RETRACTED
02:55	ST STILL RETRACTED PI-2=1.5 PSIA
03:00	ST FLOW RATE TO MAXIMUM, W=239 PPH
03:20	CHAMBER PRESSURE @ 10 TORR - ST STILL RETRACTED
05:00	ST DELTA P=79.5 PSI, W=235 PPH, T(IN)=106 F, T(OUT)=102 F
05:22	ST DELTA P=29.7 PSI, W=80 PPH, T(IN)=106 F, T(OUT)=100 F
05:46	ST DELTA P=53. PSI, W=143 PPH, T(IN)=100 F, T(OUT)=92 F
07:12	CHAMBER PRESSURE @ 5E-5 TORR
07:22	ST TP101 COMPLETE W=215 PPH, T(IN)=100 F
08:00	CHAMBER TEMPS T(WALL)=-286 F, T(FLOOR)=-121 F
08:16	HT CONTROL PANEL ON- MAX. RETRACT LIGHT ON
08:22	HT MAX DEPLOY LIGHT ON (23.4 FT.) DEPLOYMENT TIME 1 MIN. 37 SEC.
08:29	HT CONTROL PANEL OFF
08:39	ST DEPLOYMENT TO 1/3 DEPLOY BEGINS
08:41	ST OVERSHOOTS 1/3 DEPLOY MARK
08:43	ST RADIATOR @ 1/3 DEPLOY (8.1 FT.)
11:13	HT TP918-2 COMPLETE W=300 PPH, T(IN)=70 F
11:28	ST TP102 COMPLETE W=160 PPH, T(IN)=100 F
12:13	HT TP919-2 COMPLETE W=500 PPH, T(IN)=70 F
13:25	ST RADIATOR DEPLOYING TO 2/3 DEPLOY
13:40	ST IR LAMPS TURNED ON TO 30 BITS ABORT TP103 RADIATOR RETRACTING
13:45	ST RADIATOR RETURN FLOW HAS STOPPED AT VAT
13:50	ST IR LAMPS AT FULL POWER 63 BITS
13:54	ST RADIATOR AT 2/3 DEPLOY GOING TO FULL DEPLOY
14:00	ST RADIATOR FULLY DEPLOYED-FLOW RESTARTED
14:06	ST RETRACTION STARTS W=230 PPH
14:11	ST FLOW REDUCED TO 150 PPH
14:16	ST RADIATOR FULLY RETRACTED
14:19	ST IR LAMPS OFF
14:38	CHAMBER TEMPS T(WALL)=-242 F, T(FLOOR)=-206 F
14:44	HT TP964 COMPLETE W=500 PPH, T(IN)=140 F
15:45	HT TP917-2 COMPLETE W=300 PPH, T(IN)=139 F
15:50	ST TP105 COMPLETE W=150 PPH, T(IN)=101 F
17:00	ST TP106 COMPLETE W=50 PPH, T(IN)=100 F
17:51	HT TP965 COMPLETE W=170 PPH, T(IN)=143 F
18:06	HT CONTROL PANEL ON - MAX. DEPLOY LIGHT ON
18:09	HT RETRACTION STOPPED DUE TO BINDING
18:15	VIDEO PAN OF HT OUTLET MANIFOLD SHOWS MANIFOLD BOWED APPROX 1 FT ABOVE DEPLOYMENT PLANE

C-2

TIME	ACTIVITY/COMMENT
273 18 43	HT OUTLET MANIFOLD NODAL MAP OF TEMP APPROXIMATED BY VISUAL CUES
18 46	HT RETRACTION STOPPED AT 2/3 DEPLOY MARK
18:47	HT RETRACTION RESUMED
18:50	HT MAX RETRACT LIGHT ON
18:55	HT REDEPLOYED TO 2/3 DEPLOY -15.6 FT.
18:58	HT CONTROL PANEL OFF T(DEP MTR)=34 F, T(SCJ MTR)=40 F
19 00	CHAMBER TEMPS T(WALL)=-242 F, T(FLOOR)=-175 F, 1E-5 TORR
20:09	ST TP103-2 COMPLETE W=300 PPH, T(IN)=142 F
20:11	HT TP913 COMPLETE W=300 PPH, T(IN)=143 F
20:15	ST DEPLOYMENT TO 2/3 DEPLOY STARTS
20:30	ST RADIATOR AT 2/3 DEPLOY - 16.2 FT.
20:48	ST READJUSTED TO 2/3 DEPLOY (RETRACTED 8 INCHES)
21:20	HT TP914 COMPLETE W=500 PPH, T(IN)=144 F
21:24	ST RADIATOR PANEL AT 13 FT.
21:37	ST DEPLOYED TO 17 FT.
21:45	ST TP112 COMPLETE W=245 PPH, T(IN)=140 F
21:48	ST RETRACTED 2 FT IN SUDDEN MOVE
21 55	ST DEPLOYED TO 2/3 DEPLOY MARK (16.2 FT.)
22 10	HT OUTLET MANIFOLD PANNED-APPEARS STRAIGHT NOW
22:20	HT RETRACTED TO 1/3 DEPLOY W/HIGH FLUID PRESSURE W=500 PPH, P(IN)=190 PSIA, DEPLOYED (7.8 FT.)
22:30	ST DEPLOYMENT TO 27.3 FT. BEGINS
22:39	ST FULLY DEPLOYED AT 27.3 FT.
22:45	ST FLOW DECAYING (TEMPS FALLING)
23:00	ABORT ST TP116 W/COLD WALLS
23:01	HT TP910 COMPLETE W=500 PPH, T(IN)=140 F
23 02	ST IR LAMPS ON TO 30'BITS'
23:39	ST FLOW TURNED OFF
274:00:31	HT TP909 COMPLETE W=300 PPH, T(IN)=140 F
01:05	ST TP107 (IR LAMPS TO TSINK=0 F) BEGINS
03:28	HT TP911 COMPLETE W=500 PPH, T(IN)=70 F
06 26	ST PANEL AVERAGE TEMPERATURE - 4 F
06.36	HT APPEARS TO BE "BYPASSING" EXPOSED TUBES
06:55	HT TP908 ABORTED DUE TO BYPASSING FLOW
07 00	ST RETRACTION INITIATED
07 20	ST RADIATOR FULLY RETRACTED (8 MIN. FROM FIRST MOVE.)
07 30	HT CONTROL PANEL ON - 7 8 FT.
07 37	HT CONTROL PANEL OFF - RADIATOR AT MAX RETRACT
07:48	ST TP107 COMPLETE TSINK=4 F
08 14	ST DEPLOYMENT STARTS W=0 PPH
08.22	ST RADIATOR FULLY DEPLOYED - 27 3 FT
08:40	ST FLOW STARTED W/TSINK=4 F HT IR LAMPS TO TSINK=0 F, W=300 PPH

TIME	ACTIVITY/COMMENT
2.4 09:15	HT CONTROL PANEL ON - MAX RETRACT LIGHT ON
09:28	REPOSITIONED SCREWJACK AT FIRST INDICATION DEPLOY
09.32	HT DEPLOYMENT STOPPED SHORT (CAMERA MISPOSITIONED)
09:37	HT RETRACTED TO MAX RETRACT (UNABLE TO DEPLOY PANEL)
09:39	HT MAX DEPLOY LIGHT ON NOT FULLY DEPLOYED
09.43	UNABLE TO INCREASE DEPLOYMENT-RETRACT AGAIN
09:47	HT MAX RETRACT LIGHT ON
09:52	HT MAX DEPLOY LIGHT ON - 22.5 FT.
09:56	HT DEPLOY PANEL OFF-T(DEP MTR)=44 F, T(SCJ MTR)=58 F
10:00	HT FLOW TURNED OFF (CALIBRATED TSINK=0 F)
10:50	CHAMBER TEMPERATURES-T(WALL)=-234 F, T(FLOOR)=-132 F
13:10	ST TP116-2 COMPLETE W=100 PPH, T(IN)=142 F
13:20	HT FLOW STARTED W/TSINK=0 F
13:36	HT DEPLOY PANEL ON -MAX DEPLOY LIGHT ON- W=150 PPH
13:39	HT MAX RETRACT LIGHT ON- RETRACT TIME 1 MIN. 36 SEC.
13:41	HT DEPLOY PANEL OFF-T(DEP MTR)=16 F, T(SCJ MTR)=35 F
14:29	HT DEPLOY PANEL ON -T(DEP MTR)=15 F, T(SCJ MTR)=31 F
14:36	HT MAX DEPLOY LIGHT ON- NOT FULLY DEPLOYED
14:38	FURTHER DEPLOUMENT (HT) IMPOSSIBLE - RETRACT
14:43	HT MAX RETRACT LIGHT ON NOT FULLY RETRACTED
14:46	HT MAX DEPLOY LIGHTON (23 FT.)
14:57	HT DEPLOY PANEL OFF-T(DEP MTR)=37 F, T(SCJ MTR)=48 F
15:06	ST TP117 COMPLETE W=200 PPH, T(IN)=138 F
15:25	CHAMBER TEMPERATURES T(WALL)=-236 F, T(FLOOR)=-121 F
16:15	RELOADING FLEX CAUSES IR LAMPS TO SHUT OFF
16:22	HT AND ST IR LAMPS BACK TO TSINK=0 F
17:15	ST TP120 COMPLETE W=250 PPH, T(IN)=140 PPH
17:17	HT TP966 COMPLETE W=150 PPH, T(IN)=140 PPH
17:40	ST RETRACTION BEGINS CHAMBER PRESS INC TO 9.6E-5 TORR
17:49	ST RADIATOR RETRACTED TO 2/3 DEPLOY (16.2 FT.)
18:48	HT TP925-2 COMPLETE W=300 PPH, T(IN)=142 F
19:57	HT TP926-2 COMPLETE W=500 PPH, T(IN)=140 F
20:09	ST TP136 COMPLETE W=200 PPH, T(IN)=141 F
21:14	HT TP924-2 COMPLETE W=300 PPH, T(IN)=100 F
22:03	ST TP137 COMPLETE W=100 PPH, T(IN)=141 F
22:13	HT RADIATOR RETRACTED TO 2/3 DEPLOY (15.6 FT.)
22:27	ST RADIATOR RETRACTED TO 1/3 DEPLOY (8.1 FT.)
23:10	HT TP971 COMPLETE W=500 PPH, T(IN)=141 F
23:50	ST TP138 COMPLETE W=100 PPH, T(IN)=143 F

ORIGINAL PAGE IS
OF POOR QUALITY

TIME	ACTIVITY/COMMENT
275:00:52	ST TP139 COMPLETE W=200 PPH, T(IN)=138 F
01 52	HT TP972 COMPLETE W=300 PPH, T(IN)=140 F
02 04	HT RADIATOR RETRACTED TO 1/3 DEPLOY (7.8 FT.)
02:31	ST FLOW TURNED OFF - IR LAMP CALIBRATION
03:28	HT TP973 COMPLETE W=300 PPH, T(IN)=141 F
04:44	HT TP974 COMPLETE W=500 PPH, T(IN)=140 F
05:01	ST IR LAMPS CALIBRATED TO TSINK=25 F
05:24	ST RADIATOR DEPLOYED TO MAX DEPLOY (27.3 FT.)
05:34	ST FLOW RESTARTED W=100 PPH, T(IN)=140 F
06 25	HT TP976 SKIPPED OVER (AFFECTING ST T(IN))
07:03	ST TP129 COMPLETE W=100 PPH, T(IN)=120 F
08:17	ST TP130 COMPLETE W=200 PPH, T(IN)=120 F
08:43	HT TP975 COMPLETE W=500 PPH, T(IN)=70 F
10:03	HT TP976 COMPLETE W=150 PPH, T(IN)=70 F
10:29	HT DEPLOY PANEL ON T(DEP MTR)=31 F, T(SCJ MTR)=38 F
10:32	HT MAX RETRACT LIGHT ON (UNABLE TO DEPLOY FROM 1/3)
10:35	HT RADIATOR DEPLOYED TO 2/3 DEPLOY (15.6 FT.)
10:39	HT DEPLOY PANEL OFF-T(DEP MTR)=36 F,T(SCJ MTR)=42 F
11:10	ST TP131 COMPLETE W=240 PPH, T(IN)=130 PPH
11 11	HT IR LAMPS OFF
11:22	ST FLOW REDUCED TO 200 PPH
11:38	ST RADIATOR RETRACTED 2/3 DEPLOY (16.2 FT.)
12:33	ST TP132 COMPLETE W=200 PPH, T(IN)=133 F
12:45	HT FLOW RESTRICTIONS SEEM EVIDENT TUBES 45-60
14:10	ST TP133 COMPLETE W=100 PPH, T(IN)=130 F
14:38	HT TP912 COMPLETE W=150 PPH, T(IN)=70 F
15:10	ST RADIATOR RETRACTED TO 1/3 DEPLOY (8.1 FT.)
15:40	HT TP915 COMPLETE W=500 PPH, T(IN)=70 F
15:45	HT IR LAMPS ON TO TSINK=0 F
16:59	HT TP969 COMPLETE W=500 PPH, T(IN)=70 F
17:25	ST RADIATOR NOW DEPLOYED TO 9 FT.
17:35	ST TP134 COMPLETE W=100 PPH, T(IN)=130 F
18:20	HT TP968 COMPLETE W=150 PPH, T(IN)=71 F
18:25	ST TP135 COMPLETE W=200 PPH, T(IN)=130 F
19:01	HT RADIATOR FULLY DEPLOYED AFTER 2 FULL RETRACTS (PROBLEM W/REVERSING DEPLOY MOTOR) - 22.9 FT.
19:06	ST IR LAMPS OFF
20:30	HT TP967 COMPLETE W=150 PPH, T(IN)=70 F
20:40	ST TP140 COMPLETE W=200 PPH, T(IN)=129 F
21:45	HT TP923-2 COMPLETE W=300 PPH, T(IN)=70 F
21:47	ST TP141 COMPLETE W=150 PPH, T(IN)=130 F
21:58	ST IR LAMPS ON TO TSINK = 0 F
22:43	HT TP927-2 COMPLETE W=500 PPH, T(IN)=70 F
23:09	ST TP142 COMPLETE W=185 PPH, T(IN)=100 F
23:20	COMPLETED VIDEO RECORDING OF FIN MAT'L TEARS
23:23	HT RADIATOR RETRACTION BEGINS
23:25	HT RADIATOR AT MAX RETRACT POSITION- 1 MIN 35 SEC.
23:28	ST RADIATOR STOPPED AT WIRE OVERLAP AT 3 FT. MARK
23:34	ST RADIATOR STILL AT 3 FT. MARK
23:41	ST FLOW TURNED OFF
23:44	ST DEPLOYED TO 5 FT
23:47	ST RADIATOR STOPPED AT SAME SPOT AS BEFORE
23:49	ST RADIATOR COMPLETES RETRACTION
23:52	START REPRESS
23:53	ST FLOW RESTARTED

ORIGINAL PAGE IS
OF POOR QUALITY

TIME	ACTIVITY/COMMENT
00:32	CHAMBER PRESSURE @330 TORR (REPRESSING)
00:00	FLOW TO BOTH RADIATORS TURNED OFF
04:10	REPRESS COMPLETE - DOOR OPEN - FREON @ 6 TO 7 PPM

AFTER TWO ATTEMPTS AT REMOTELY DEPLOYING RADIATOR TO MAX DEPLOY POSITION, THE HARD TUBE RADIATOR WAS MANUALLY EXTENDED WITH ASSISTANCE FROM DEPLOYMENT MECHANISM TO A DEPLOYED LENGTH OF 23.2 FT. THE INLET AND OUTLET MANIFOLDS WERE INSULATED WITH SIX LAYERS OF MYLAR AS WELL AS THE OUTBOARD SPRING BOX. THREE OF THE HT TABLE THERMOCOUPLE WERE RELOCATED AS SUCH: ONE EACH ON THE OUTSIDE SURFACE OF THE MANIFOLD INSULATION FOR THE INLET AND OUTLET TO TUBE 60 AND ALSO ONE ON THE FIN MATERIAL BETWEEN TUBE 64 & 65 (WORST TEAR) NEAR THE INLET MANIFOLD. POWER TO THE HT DEPLOYMENT CONTROL PANEL WAS ALSO CUT OFF TO AVOID USE.

276:05:40	CHAMBER DOOR CLOSED - BEGIN PUMPDOWN
06:17	CHAMBER PRESSURE @ 285 TORR
10:10	CHAMBER PRESSURE @ 2.9 E-5 TORR VACUUM TESTING AGAIN
11:31	HT TP964-3 COMPLETE W=500 PPH, T(IN)=140 F
13:32	HT TP965-3 COMPLETE W=166 PPH, T(IN)=144 F
13:35	ST TP150 COMPLETE W=200 PPH, T(IN)=102 F
14:15	VIDEORECORDED HT MANIFOLD INSULATION & DAMAGED FIN
15:01	ST TP151 COMPLETE W=150 PPH, T(IN)=129 F
15:11	HT TP919-3 COMPLETE W=500 PPH, T(IN)=69 F
15:20	HT IR LAMPS TO PREVIOUS TSINK=0 F
15:45	ST RADIATOR DEPLOYMENT BEGINS W/COLD WALL ENVIRON.
15:50	ST RADIATOR FULLY DEPLOYED- TEMPS DROPPING!
16:02	ST IR LAMPS TO TSINK=0 F NO FLOW MEASUREMENT
16:13	ST IR LAMPS POWER INCREASED-FLOW INDICATED
16:23	ST FLOWMETER NOT INDICATING FLOW BUT FLOW RETURNING TO VAT. PRESS. TRANDUCERS INDICATING FLOW
16:33	HT TP927-3 COMPLETE W=500 PPH, T(IN)=70 F ENVIRONMENT NOT STEADY STATE YET
17:03	ST RADIATOR RETRACTION INITIATED-FLOWMETER OUT
17:10	ST RADIATOR RETRACTION COMPLETE -FLOWMETER OUT
17:35	HT IR LAMPS POWER INCREASED 3 "BITS"
18:15	HT IR LAMPS POWER INCREASED 2 "BITS"
18:45	HT IR LAMPS REDUCED TO TSINK=0 F SETTING
19:42	ST IR LAMPS OFF-SINCE FLOWMETER FAILED, TESTING ABORTED
19:45	HT TP967-3 COMPLETE W=150 PPH, T(IN)=70 F
19:50	HT IR LAMPS OFF
21:07	HT TP918-3 COMPLETE W=300 PPH, T(IN)=70 F
21:45	HT FLOW INCREASED TO W=500 PPH, T(IN)=140 F
23:30	CHAMBER REPRESS IN PROGRESS

ORIGINAL PAGE IS
OF POOR QUALITY

TIME	ACTIVITY/COMMENT
277:01:00	REPRESS COMPLETE - DOOR OPEN - FREON @ 2 PPM

PHOTOS TAKEN OF MANIFOLD INSULATION. INSULATION WAS REMOVED FROM HT MANIFOLDS AND SPRING BOX. THERMOCOUPLES ON OUTER SURFACE OF INSULATION WERE PLACED ON MANIFOLDS (INLET & OUTLET) NEAR TUBE 60. THE INSTRUMENTED FIN SAMPLE WAS REPOSITIONED AND THE LENGTH OF DEPLOYMENT WAS NOT CHANGED.

277:01:20	CHAMBER DOOR CLOSED - PUMPDOWN BEGINS
03:30	CHAMBER PRESSURE @ 2 TORR LN2 FLOW BEGINS
04:00	FLOW WAS STARTED TO BOTH RADIATORS
05:37	CHAMBER PRESSURE @ 6E-5 TORR VACUUM TEST BEGINS
	ST FLOWMETER NOT REPAIRED-NO TEST DATA
08:31	HT TP918-4 COMPLETE W=300 PPH, T(IN)=70 F
10:16	HT TP964-4 COMPLETE W=500 PPH, T(IN)=140 F
10:24	FINAL REPRESS BEGINS
13:53	CHAMBER PRESSURE @ 740 TORR -FLOW TO RADIATORS OFF
13:56	REPRESS COMPLETE- DOOR OPEN- FREON @ 2 PPM

PHOTOS OF FIN MATERIAL DAMAGE WERE TAKEN. PHOTOS MADE OF GENERAL TEST SETUP