NEW CONCEPTS IN DEPLOYABLE BEAM STRUCTURES

Marvin D. Rhodes
NASA Langley Research Center
Hampton, VA 23665

Large Space Antenna Systems Technology - 1984
December 4-6, 1984

NEW CONCEPTS IN DEPLOYABLE BEAM STRUCTURES

During the past twenty years a number of concepts have been proposed for deployable beam structures which can be used in space applications. Two years ago a number of these concepts were surveyed by independent studies and the results of those surveys are reported in references 1-3. An evaluation of these references indicates that the design of deployable structures involves a complicated tradeoff of packaging efficiency, the overall mechanisms associated with deploying and latching beam joints, and the requirements and complexity of the beam deployer/repacker.

Recently the LaRC Structures and Dynamics Division has had an in-house effort supplemented by limited contract support to reexamine deployable structures and propose some new concepts which can improve some of the basic features of those evaluated in references 1 and 2. The beams evaluated in the current paper involve new deployable beam concepts in the general areas of three longeron deployable beams, controllable geometry beams and deployable/erectable beams. These new concepts have, in most cases, been developed to the point of fabricating operational demonstration models. The concepts are discussed in the order presented in figure 1.

- Three longeron deployable beams
- Controllable geometry beams
- Deployable/erectable beams

Figure 1

JOINTS DOMINATE BEAM STRUCTURAL RESPONSE

All deployable beams have some type of hinge joint incorporated in each deploying bay. The response of these joints can signficantly influence the structural behavior of the beam. A clevis joint that is considered to be representative of one of the simplest joints that can be used in deployable structures was tested to evaluate load/deflection response and the results are shown in figure 2. At very low values of load the joint has a dead band region due to free play between the pin and its load bearing members. The cumulative effect of this free play in a deployed beam could be significant due to the large number of joints involved. This effect would be manifest in the beam by the inability to accurately position the beam tip as shown by the sketch on the right. On either side of the joint free play region is a nonlinear region which is associated with seating of the pivot pin. This effect could be manifest as nonlinear response of the deployed beam structure.

At loads above the pin seating region the response of the joint is nearly linear; however, the joint is approximately 50% stiffer in compression than it is in tension. The difference in stiffness is inherent in the joint due to the load path through the joint. The clevis joint tested was a very simple joint and the characteristics noted are likely to be evident to an even greater extent in complex multimember joints.

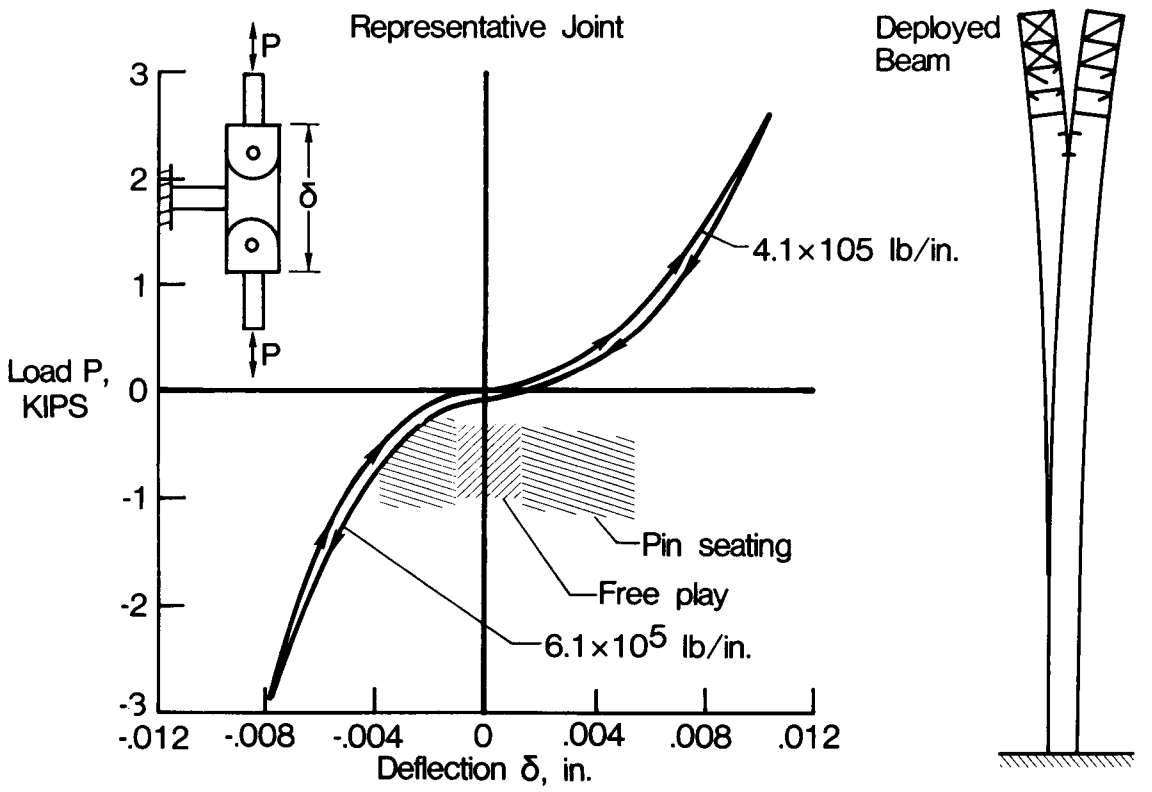

Figure 2

BATTEN AUGMENTED TRIANGULAR (BAT) BEAM

Since a large number of joints are generally required in deployable beams it would be desirable to incorporate features in the beam design that would eliminate or reduce undesirable joint effects such as free play and pin seating. A three longeron batten augmented triangular (BAT) beam has been designed for this purpose. The important aspects of the beam are illustrated in the sketches of figure 3. The beam is a single fold deployable configuration which has each longeron connected by cross laced diagonals and a batten. Each bay of the beam is internally preloaded by buckling the batten and the three battens that constitute a batten frame are connected together at the batten ends so as to buckle simultaneously. To retract the beam the longerons hinge at the bay mid-length and at the batten/diagonal connector to fold into the center of the bay. The diagonals telescope and hinge at the batten diagonal connector to nest between the battens which are H shaped members.

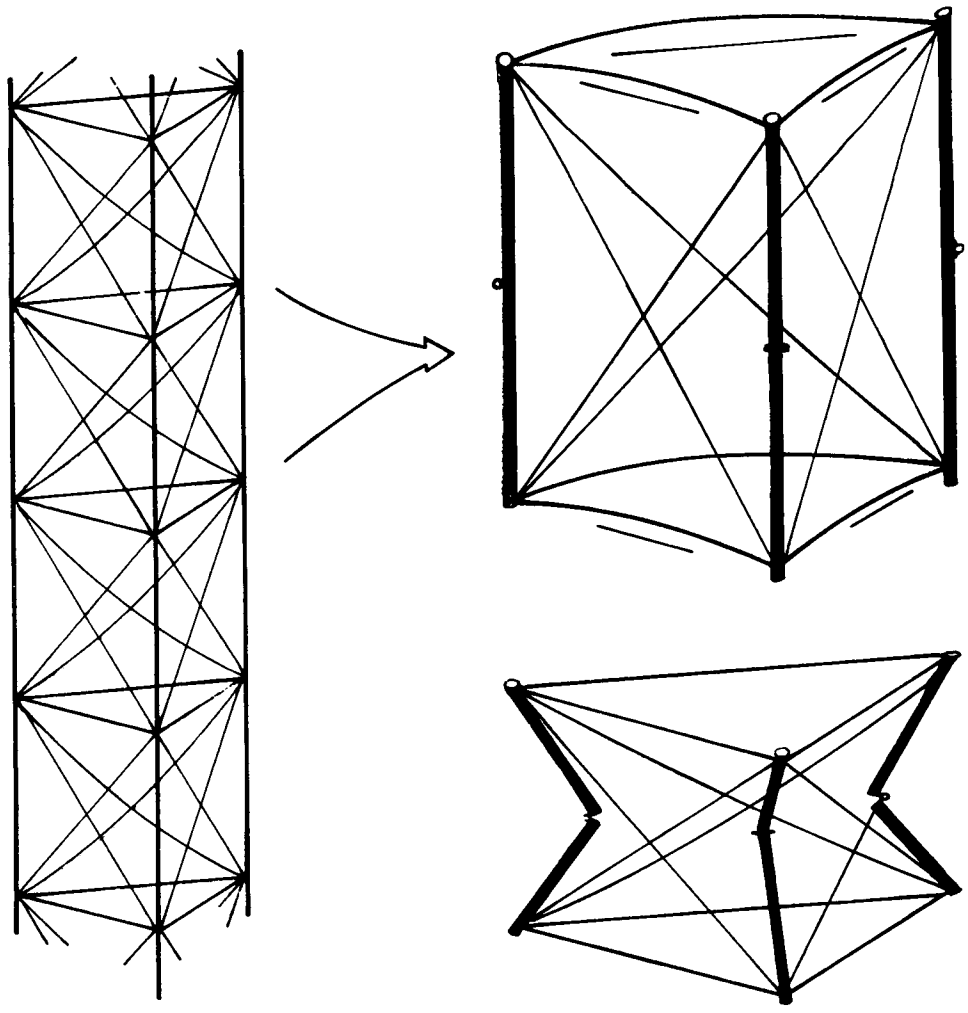

Figure 3

DEPLOYABLE BAT BEAM MODEL

A demonstration model of the deployable bat beam was designed and fabricated for concept evaluation. Photos of the model are shown in figure 4. The photo on the left is of the model in the stowed (retracted) position attached to a plywood base. The center photo illlustrates the deployment sequence with the top bay being deployed. The model fully deployed is shown on the right of figure 4. The model has a longeron length of 2 meters per bay and a deployed to packaged height ratio of about 80:1. All longeron and diagonal members were fabricated from continuous filament graphite tubes and rods. The longeron diameter is about 1.3 cm (.5 in) and the ratio of the axial stiffness of the longeron to the axial stiffness of the diagonal is approximately 4:1. The longeron members have a simply supported Euler buckling load of approximately 50 lbs and the longeron preload induced by the buckled fiberglass batten is 11 lbs. The midlength longeron joints have a self deploying mechanism incorporated in the joint to maintain the hinge in the deployed position.

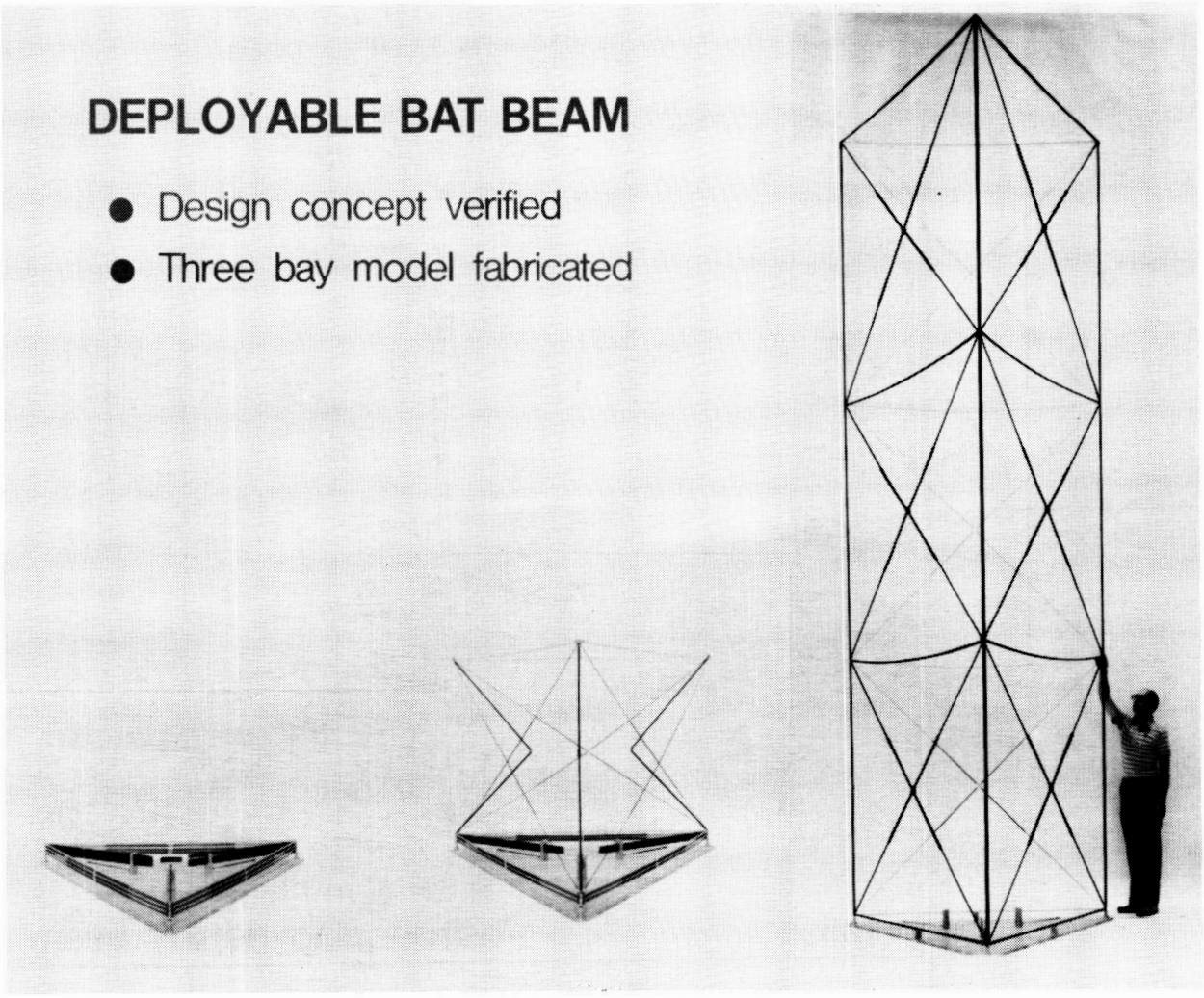

Figure 4

BAT BEAM DEPLOYER

A concept was developed for a BAT beam deployer and sketches are shown in figure 5 to depict the operation of the deployer. This work was supported by contract and detailed information can be obtained in reference 4. The packaged configuration of the beam is shown on the left of figure 5. For this configuration the beam corner longeron joints are stacked on each other and supported by guide rails at the three corner locations. Beam deployment is accomplished by moving the nodes away from the deployer using the acme threaded lead screws shown in the left insert. In the stowed configuration, the lead screws are threaded into all the nodes to support the nodes for launch and to provide a storage location for the screw. To initiate deployment the lead screws are turned so that they back out of the stacked nodes until the guide rails deploy and latch in the deployed position as shown in the sketch on the right of figure 5. When the guide rails latch the lead screws remain threaded in the nodes of the top batten frame. The lead screw rotation is then reversed and the beam begins to deploy. The beam deployment from this point is continuous; however, it can be stopped within one bay at any partially deployed location. Additional information can be found in a subsequent figure.

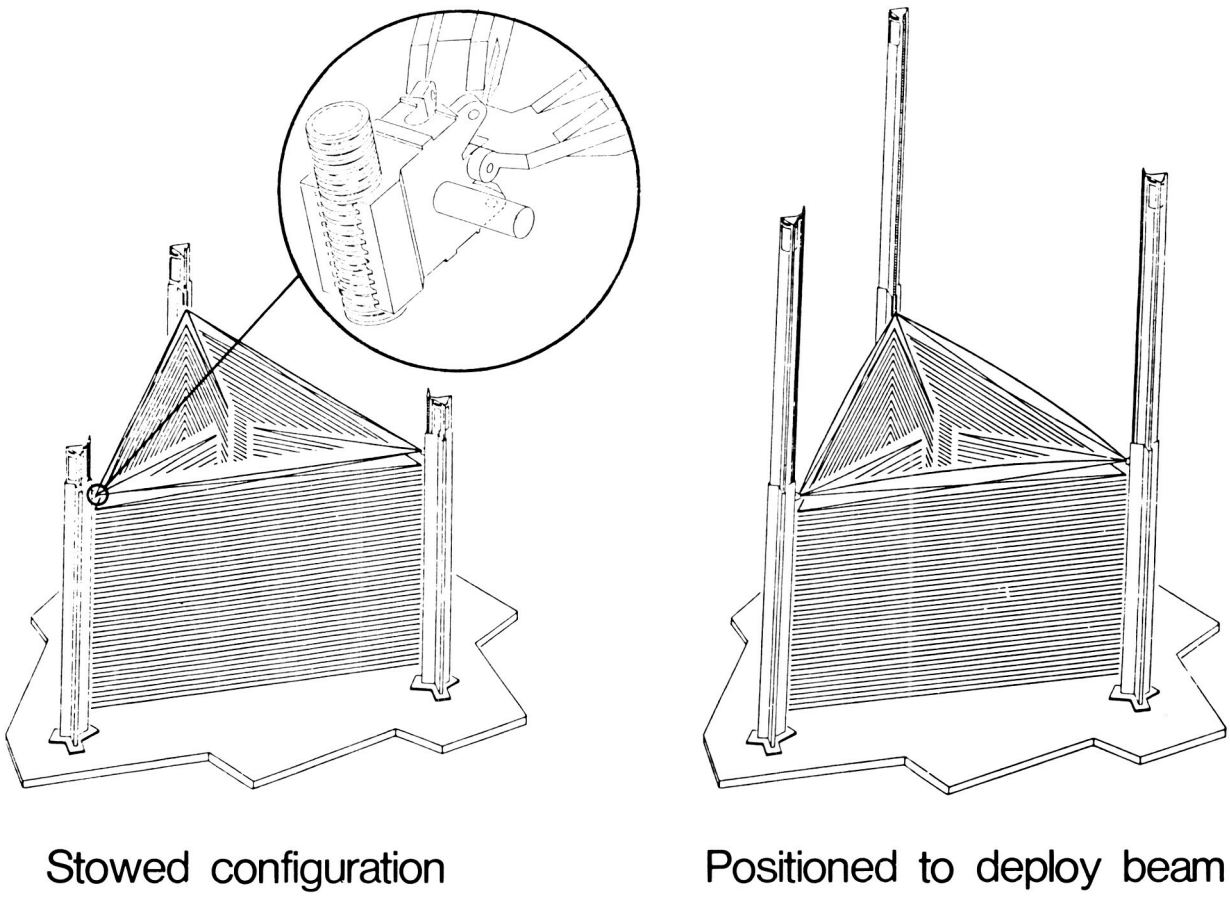

Figure 5

BAT BEAM DEPLOYER

The sequence for continuous deployment of the BAT beam is illustrated in figure 6. As each node deploys it causes the longeron to unfold and the diagonals to telescope outward. The deploying bay base node is prevented from premature engagement by the escapement mechanism shown adjacent to the guide rail in the sketch on the left. When the longeron and other members of the deploying bay are fully deployed the base node is pulled through the escapement wheel which is friction loaded and onto the lead screw. As it is pulled to the lead screw the node moves laterally to buckle the batten. The bay top node exists from the top of the lead screw and the sequence repeats until the beam is fully deployed. To retract the beam the entire process is reversed.

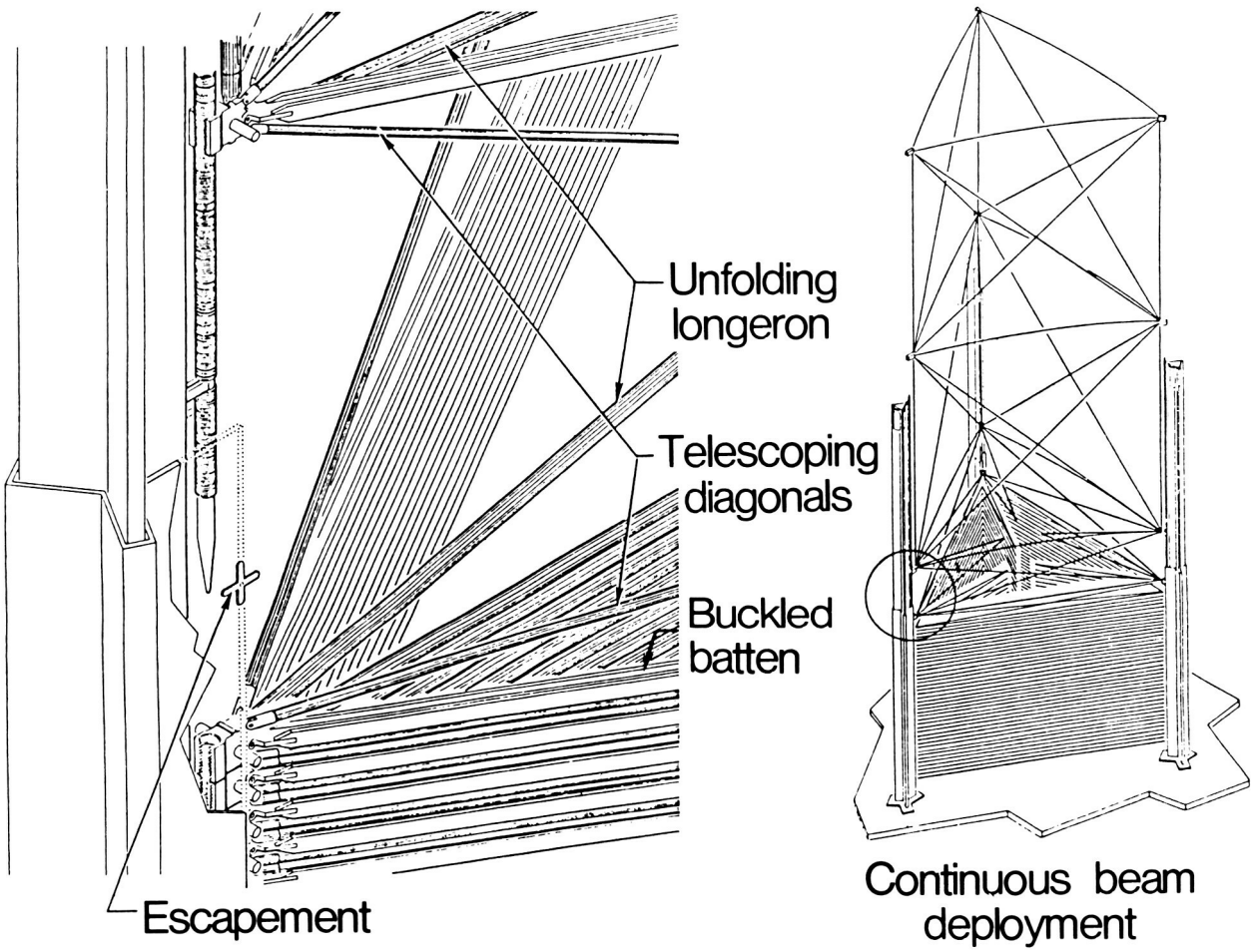

Figure 6

DEPLOYABLE TETRAHEDRAL BEAM
DOUBLE FOLD CONCEPT

A concept for a deployable beam whose basic repeating element is an irregular tetrahedral has been investigated. The beam geometry and folding technique are illustrated in the photographs of a simple working model shown in figure 7. This work was performed under NASA Contract NAS1-17536-2. The objective of the contract was to define the folding sequence and hinge axis orientation to package the tetrahedral beam into a compact unit. To illustrate the process the sequence required to retract the deployed model is described below. The retraction sequence is initiated by hinging the diagonal in the foreground of figure 7 (a and b) into a plane formed by the longerons in the foreground. The next retraction step is shown in figure 7c where the hinge in the diagonal identified by the dot is rotated so the joint nodes fold in the manner indicated by the arrow in figure 7c to the folded position shown in figure 7d. The diagonal indicated by the dot in figure 7d is then hinged to move the joint node to the new position indicated by the arrow. The new folded position is shown in figure 7e. The three step folding process initiated in figure 7b is then repeated as many times as required to fold the beam into a compact package such as the double fold arrangement shown in figure 7f.

This beam has a number of very desirable structural features: (1) it has no joints in the longerons except those near the nodes, (2) all joints are simple single axis hinge pivots, (3) each joint body is fixed to the end of one member which serves to stabilize the body and reduce any rocking motion that may occur due to misalignment, and (4) it can be folded into a very compact package without requiring simultaneous folding of all bays or any extra jonts in the members over those that would be required for a single fold configuration.

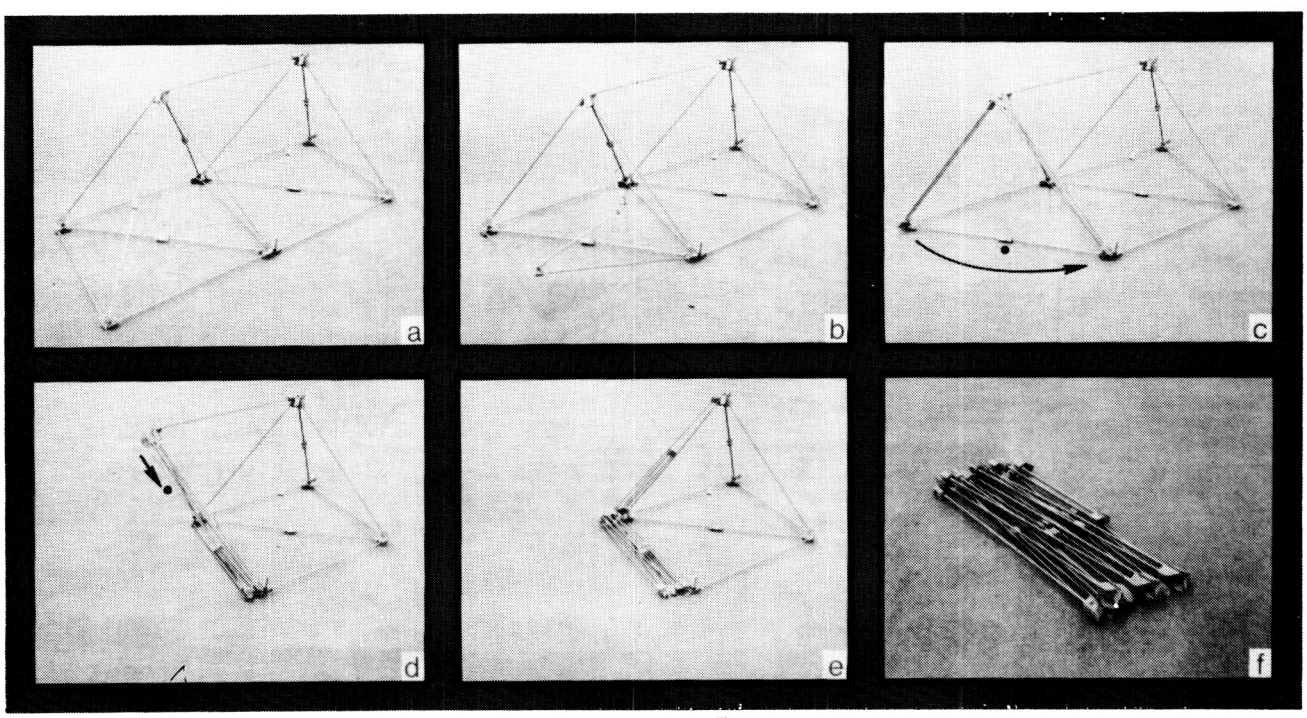

Figure 7

TWO BAY CONTROLLABLE GEOMETRY GEODESIC TRUSS MODEL

Most deployable beams such as those discussed in references 1 and 2 as well as the BAT beam discussed previously require a special purpose deployer mechanism to unfold and support the beam and the deployer then serves no useful purpose. Thse beams must also be deployed straight along the final beam axis. A new concept in deployable beam technology known as controllable geometry beams has been investigated. A controllable geometry beam has a number of members which are extensible link actuators and can serve to deploy the beam as well as cause it to deform in a predictable manner. The two bay beam model shown in figure 8 is one such controllable geometry beam concept. It is called a geodesic truss model because it is formed by connecting a series of flat sided triangular frames. The three photos of the model shown in figure 8 are the model deployed straight along the beam axis, the beam deployed in a serpentine manner with the beam tip canted and the beam fully retracted to the stowed position. The beam can serve structural functions in any deployed configuration which permits its use as an articulating serpentine structure to move masses into areas that would be otherwise difficult to reach; to correct for alignment errors in applications that require precision structural control; or to serve as a moveable jont in a space crane or manipulator arm. Details of the configuration are shown on figure 9.

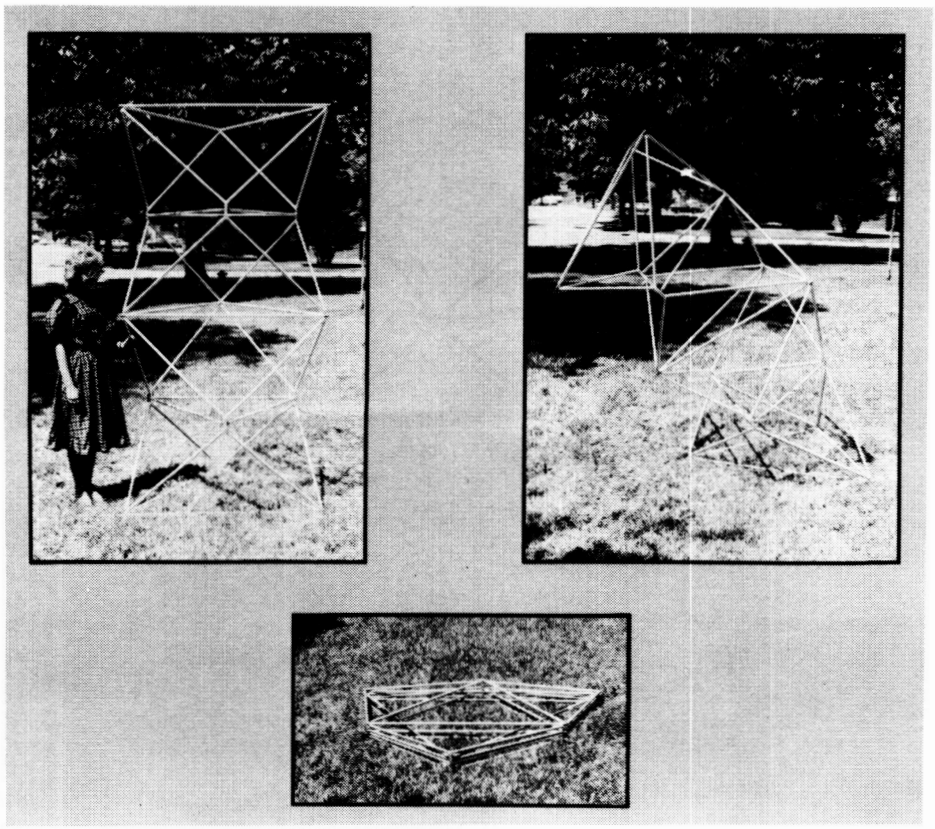

Figure 8

TWO BAY CONTROLLABLE GEOMETRY GEODESIC TRUSS MODEL (CONCLUDED)

Some details of the geodesic beam are illustrated using the sketch of the two bay model shown in figure 9. At the center of each bay are three actuator members which connect to form the triangular actuator frame noted in the figure. Each actuator can move indendently to permit the beam to achieve the required range of motion. At the end of each bay is a batten frame which is composed of three fixed length members. Conencting the actuator and batten frames are a series of longitudinal crossed members which are primary load carrying members for both longitudinal and torsional beam loads. The beam has two joint types noted in the figure as A and B. All joints in the batten frame (joint A) are alike and all joints in the actuator frame (joint B) are alike.

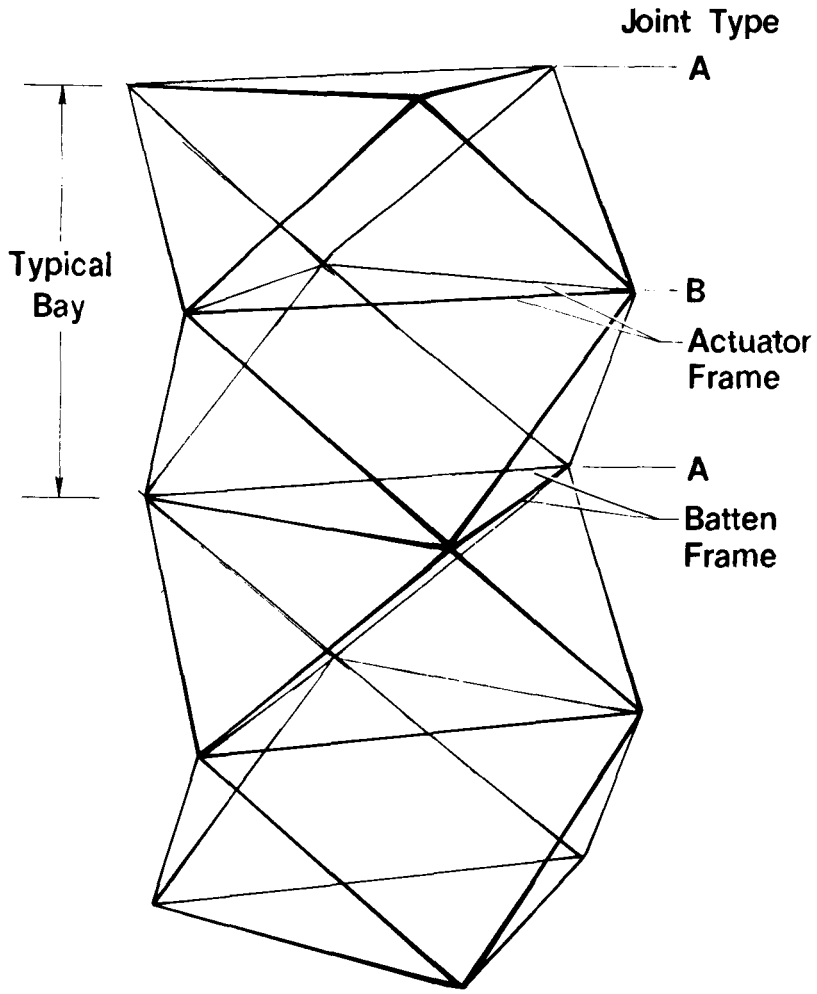

Figure 9

GEODESIC BEAM TEST SETUP

The demonstration model of the geodesic beam which is shown in figure 8 was tested over a range of potential operating positions. The test setup is shown in figure 10 with the model fully deployed. The model was loaded axially in both tension and compression. The load was applied at the end joints using displacement screw jacks and the platens of the test machine shown in the figure were used as stationary backstops to react the load. The axial displacement of each node was measured as well as the strain in each member of one bay of the beam. Some typical test results are shown in a subsequent figure.

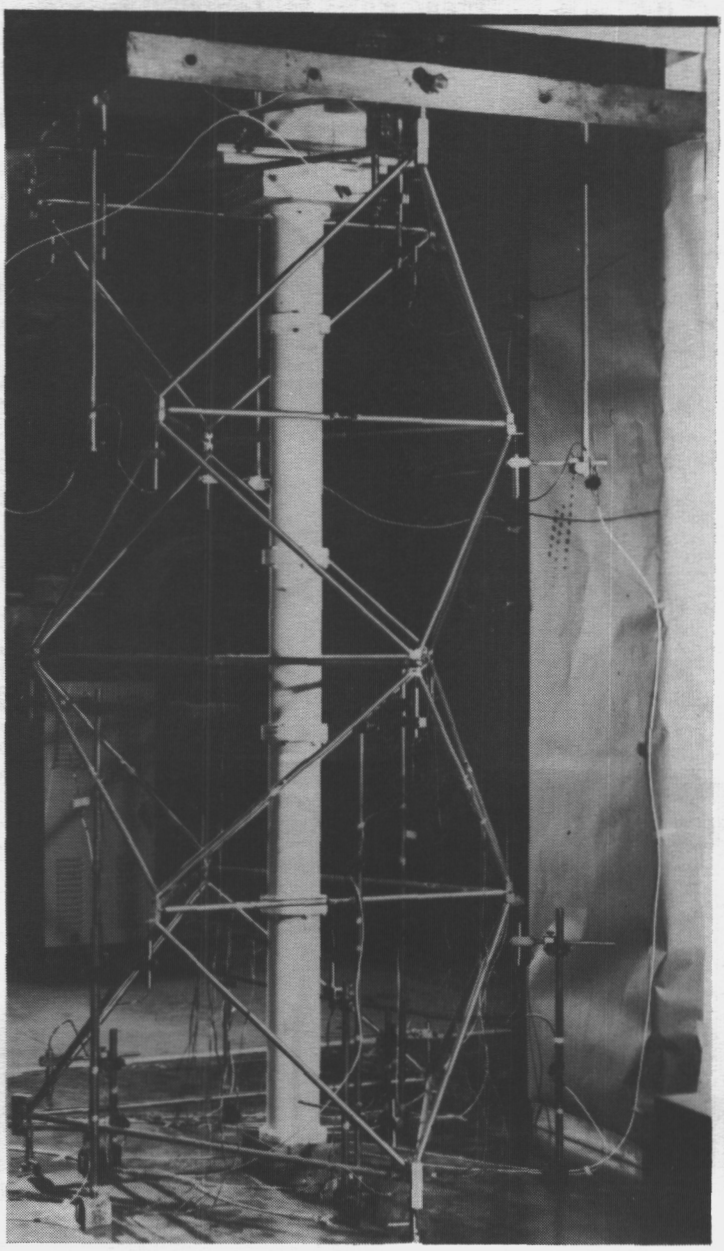

Figure 10

GEODESIC BEAM TEST RESULTS

Load displacement results from tests conducted on the geodesic beam model in the fully deployed position are shown in figure 11. The results in the figure are averages of displacement gages located at the three joints at four axial stations along the beam as noted on the sketch. At low loads the test results are nonlinear at each of the four stations along the beam. For applied loads above approximately 30 lbs, however, all load displacement curves are linear. The test results for this beam which had 15 moderately complicated joints are similar to the results for the simple clevis joint shown on figure 2. Both demonstrate nonlinear load displacement results for low ranges of test load and linear results for loads in the high range of the test values. Although not shown on figure 11 the geodesic beam also had a different axial stiffness when it was loaded in tension than it did when it was loaded in compression.

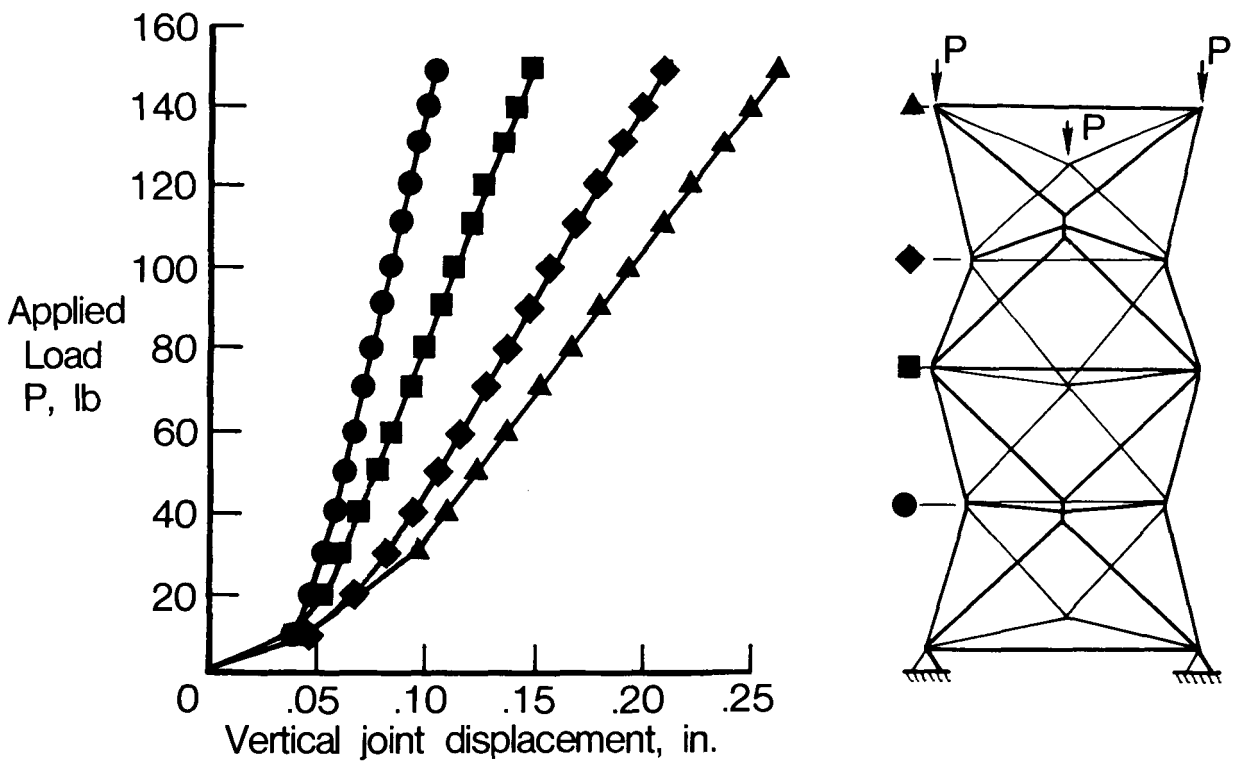

Figure 11

SPACE CRANE APPLICATION FOR CONTROLLABLE GEOMETRY STRUCTURES

One potential application for the geodesic beam concept involves the use of one or more bays attached to a truss with fixed joints which could then be used as a space crane. A sketch of this configuration is shown in figure 12. The bays of the geodesic beam would provide the required longitudinal and meridional maneuverability found only in massive pin joints normally used in crane applications. By using only a few bays of the geodesic beam the number of actuators would be limited which would reduce the mechanical complexity without sacrificing performance.

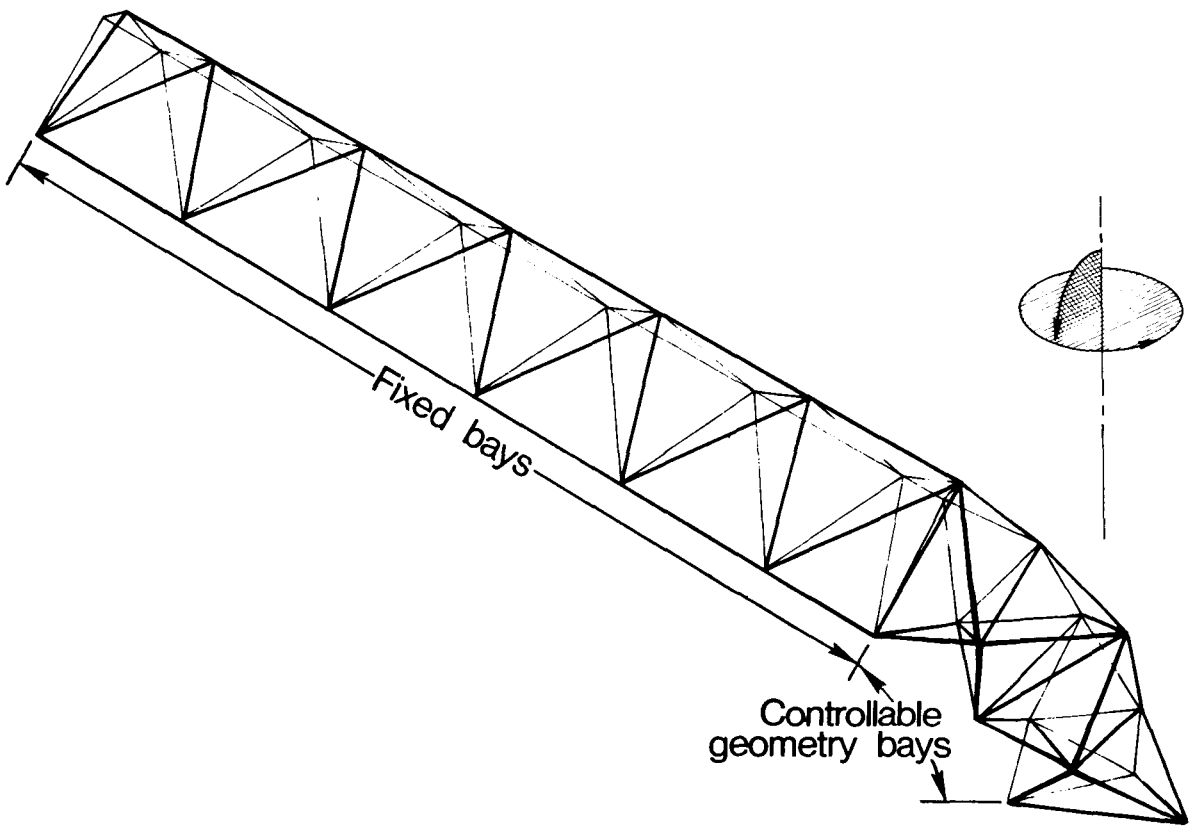

Figure 12

ANALYSIS OF CONTROLLABLE GEOMETRY BEAM STIFFNESS DURING DEPLOYMENT AND RETRACTION

To support the model development work on controllable geometry beams analytical studies have been performed to evaluate the stiffness changes a beam may encounter as articulation occurs. One analytical study was performed and the results are reported in reference 5. The study used a simple two dimensional finite element model of a warren truss and some results from the study are shown in figure 13. The deployed truss beam had identical member component stiffnesses (EA) and was configured to have a tip deflection to deployed length ratio of 0.01 when subjected to a lateral tip load of about .72 lbs. The beam model did not include any effect of joint mass nor were any effects of joints discussed in figure 2 included in the analysis.

For cantilever beam structures the ratio of the bending stiffness is proportional to the square of the frequency ratio; therefore, a determination of the natural frequency was chosen as the method to evaluate trends in stiffness. Shown in figure 13 are curves which illustrate the square of the frequency ratio as a function of deployed length for two methods of beam retraction. The curve for uniform retraction indicates that a significant loss in stiffness occurs during beam retraction. It was observed that during uniform retraction the fundamental mode changes from pure bending to a mode that is principally bending with some axial coupling. At low deployment ratios (approximately 0.15) the mode shifts to one with only axial motion. The curve for selective retraction indicates that the operational stiffness of the beam can increase significantly as the beam is retracted. This is due in part to the fact that the most heavily loaded bays at the beam root are fully deployed. In addition to the results shown in figure 13 the reference 5 study has examined the stiffness ranges that can occur in a beam during serpentine operation.

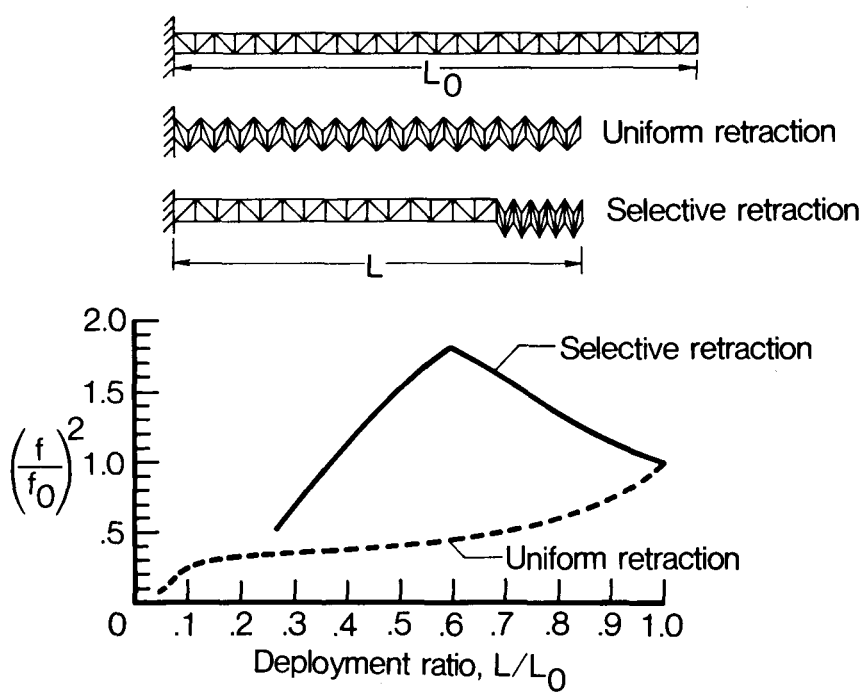

Figure 13

DEPLOYABLE/ERECTABLE BEAMS
POTENTIAL ADVANTAGES OF HYBRID APPROACH

The development of space structures technology has been primarily focused on concepts that are totally deployable or totally astronaut erected. A considerable technology base has been established in both deployable and erectable structures as evidenced by information reported in references 1, 2, 6, 7, 8. Many advantages and disadvantages exist to support or refute each approach. However, little work has apparently been done to incorporate the advantageous features of both systems into a single hybrid approach. The type of system one might consider could involve the automatic deployment of a single bay (or part thereof) using a simple stored energy system and once deployed an astronaut would connect the bays together to form a beam or planar truss. Several potential advantages of such a hybrid system are shown in figure 14.

- Good packaging and structural efficiencies
- Kinematically simple
- Fewer deployable joints required
- Reduce astronaut requirements
- Simple deployer/assembly aids

Figure 14

DEPLOYABLE/ERECTABLE HYBRID BEAM CONCEPT

An example of a deployable/erectable hybrid beam is shown in figure 15. The beam would be packaged as individual bays and could be double folded for efficient packaging. Each beam would incorporate simple deployable joints in the battens and diagonals with erectable type joints being used to connect the longerons. The four erectable joints at the corners of the bay would snap together simultaneously as the bay is slid into position.

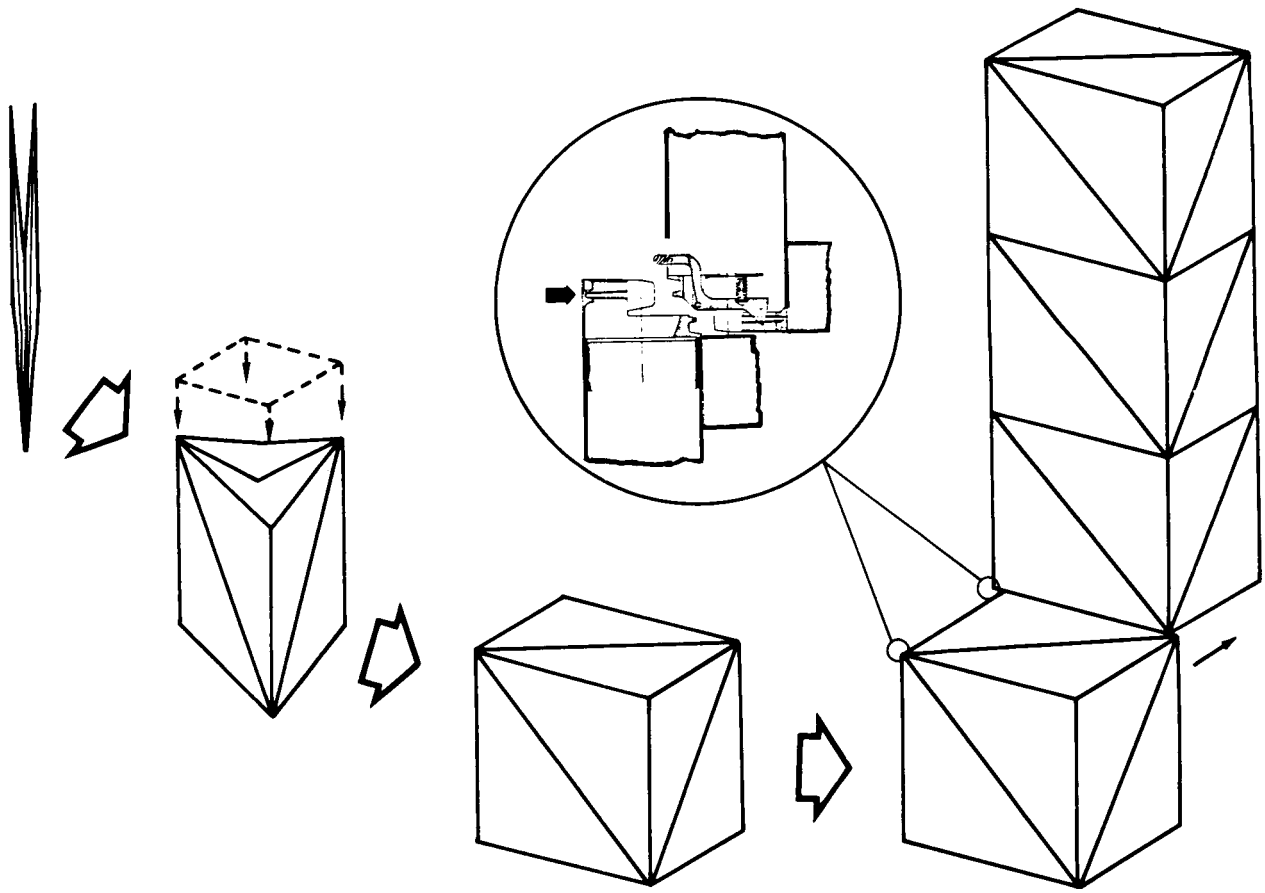

Figure 15

SUMMARY

A number of new concepts for deployable beam structures have been investigated. The status of this concept development is shown in figure 16. Although much additional work needs to be done in this area advances are being made in LaRC's Structures and Dynamics Division using an integrated approach of fabricating demonstration models and performing generic analytical studies.

Three longeron deployable beams

- Single fold bat beam design eliminates joint free play-predictable tip position
- Packaging scheme and hinge axes defined for double fold tetrahedral beam

Controllable geometry beams

- Beam concept defined and demonstration model fabricated
- Analysis of generic beam provides insight on operation to obtain high structural efficiency

Deployable/erectable hybrid beams

- New concepts examined to exploit benefits of both erectable and deployable beams

Figure 16

REFERENCES

1. Greenberg, H. S.: Development of Deployable Structures for Large Space Platforms. NASA CR-170689, December 1982.

2. Cox, R. L.; and Nelson, R. A.: Development of Deployable Structures for Large Space Platforms. NASA CR-17090, December 1982.

3. Mikulas, Martin M., Jr.; and Bush, Harold G.: Advances in Structural Concepts. Large Space Antenna Systems Technology-1982, NASA CP-2269, Part 1, 1983, pp. 257-283.

4. Adams, Louis R.; and Hedgepeth, John M.: Batten Augmented Triangular Beam. NASA CR-172461, January 1985.

5. Dorsey, John T.: Vibration Characteristics of a Deployable Controllable-Geometry Truss Beam. NASA TP-2160, June 1983.

6. Heard, Walter L., Jr.; Bush, Harold G.; Wallsom, Richard E.; and Jensen, J. Kermit: A Mobile Work Station Concept for Mechanically Aided Astronaut Assembly of Large Space Trusses. NASA TP-2108, March 1983.

7. Watson, Judith J., Heard, Walter, L. , Jr. and Jensen, J. Kermit: Swing-Arm Beam Erector (SABER) Concept for Single Astronaut Assembly of Space Structures. NASA TP-2379, January 1985.

8. Akin, David; Broden, Mary; and Mar, James: Manned Assembly of Space Structures. Large Space Antenna Systems Technology - 1982, NASA CP-2269, Part 1, 1983, pp. 285-300.