AN ADVANCED MATERIAL SCIENCE PAYLOAD FOR GAS

R. Jönsson, S. Wallin, K. Löth
Swedish Space Corporation

1985 GAS Experimenters Symposium

1 Materials Science in Sweden

Materials Science has a traditionally strong position in Sweden. Therefore it was natural that the Swedish Space Corporation when starting up Microgravity Activities concentrated on Materials Science. Experiments within this field have been performed on sounding rockets and also on NASA-aircraft F-104 in parabolic trajectory.

2 GAS experiment

When the interest turned towards long-duration zero-g flights and the possibilities opened up with the NASA GAS program, SSC rented two flight possibilities. The first of the two this payloads contains - in line with the scientific tradition - the first foundry in space. Four samples will be melted in three furnaces. The samples have a significant size and weight. As the material to be processed is lead-tin of different composition, the weight is quite high: 8 kg. Thus, nearly 10% of the payload weight is sample weight.

The scientific requirements have put heavy requirements on systems like power, heat storage and rejection, and mechanical support system. Some of the features is presented in this paper.

3 Scientific objectives

The aim of the experiments is to study solidification phenomena in metal alloys. Especially the dendritic growth and the effect of the abscence of natural convection are of particular interest for the scientist, professor Hasse Fredriksson at the Royal Institute of Technology (RIT) in Stockholm. The results from the flight processed samples will be compared with results from a lot of earth-processed samples in order to investigate the influence of the natural convection on the solidification process.

4 Experimental techniques

a. Number of experiments and sample dimensions

Four samples of different size of a lead-tin alloy (composition 10-90 and 90-10 per cent) will be solidified unidirectionally. Two samples have the dimensions 100 x 100 x 25 mm, each placed in a graphite crucible also containing heaters and a cooler. A third crucible containing two samples with the dimensions 100 x 50 x 25 mm and 100 x 25 x 25 mm is used for simultaneous processing of the two smaller samples.

b. Experimental idea

The idea is to heat and melt the sample(s) and after that create a temperature gradient across one of the long sides while keeping the short ends at isothermal conditions (see figure 1).

The temperature is then decreased while maintaining the temperature gradient across the sample(s), until the whole alloy is solidified. This arrangement gives a unidirectional solidification assuming that the insulation on other surfaces is sufficiently good.

The temperatures are monitored with nine Chromel-Alumel thermocouples positioned in the sample according to the sketch in figure 2. In this way some information on the isothermality across the surfaces A_h and A_c is obtained as well as the temperature gradient from A_h to A_c.

In order to keep the isothermal conditions over the surfaces A_h and A_c during the cooling phase (the specifically interesting experimental phase) the contraction of the alloy during cooling and solidification must be taken into account. To compensate for contraction of the sample a pressurized alloy melt forces a piston to decrease the sample volume (see figure 3).

5 Payload description

5.1 General

The payload consists of the following subsystems.

- Experimental furnaces (3)
  Crucible containing the sample(s) with three heating elements and insulation

- Cooling system:
  - pumps
  - plumbing
  - a cooler for each crucible, attached to the cold side of the sample
  - a heat sink with phase change material

- Structure

- Electronic system for control of the experiments and monitoring of experiment and housekeeping signals.

- Data handling and storage system

- Energy system
  - Batteries with control electronics
  - Power electronic unit

- NASA Interface electronics

Figure 4 shows the disposition of the subsystems of the payload.

5.2 Experimental furnaces

Four samples will be processed:

- two large samples of dimensions 100 x 100 x 25 mm each contained in a graphite crucible.

- two smaller samples of dimensions 100 x 50 x 25 mm and 100 x 25 x 25 mm, both contained in one graphite crucible of the same size as used for each of the two large samples (see figure 5).

  The graphite crucible (outer dimensions 160 x 120 x 47 mm) holds three heating elements and a cooler (see figure 6).

  The heaters are insulated coaxial resistive elements with a sheath of stainless steel (Thermocoax, Philips). They are positioned according to the diagram in figure 7.

The following experiment sequences delineate the function of the furnace:

- Heating and melting phase

All three heaters are switched on and the cooler is passive (no gas flow). The sample is melted and the "hot" surface A_h brought up to 340°C (T_h).

- Establishment of the temperature gradient

  When the temperature of the hot surface T_h is equal to 340°C the heaters H2 and H3 are switched off while the heater H1 tries to establish the desired temperature gradient $T_h - T_c$ of around 20°C, and activates the gas cooling.

- Cooling phase

  When the desired value of the temperature gradient $T_h - T_c$ is reached, the hot surface temperature T_h is decreased according to a preprogrammed profile giving a decrease of around 1°C/minute.

  The temperature gradient signal ($T_h - T_c$) will control the gas flow through the cooler in order to maintain a constant gradient.

- Post-experiment phase

  When the hot surface temperature is below 180°C, the sample is totally solidified and the heater H1 is switched off. Also the nitrogen gas flow through the cooler is shut off.

The contraction of the sample during the cooling phase has to be taken into account. A melted alloy is pressurized by the bellow and forces the piston to decrease the sample volume, thus compensating for the contraction of the

sample. In this way a good thermal contact between the graphite surface A_h and the contracting sample is preserved.

We have chosen an alloy of lead-tin-bismuth. It is contained in a small cylindrical compartment in the graphite crucible and next to the heater H1.

The graphite crucibles are surrounded by insulation blocks 25 mm thick. The insulation material is Fiberfrax Duroboard 1200 (72% Al_2O_3, 25% SiO_2, manufacturer Carborundum, USA).

The three experiments are placed besides each other on a honeycomb aluminium deck (see also figure 8).

5.3 Cooling system

A principle for the cooling system is shown in figure 9.

Three pumps P1-P3 - one for each experiment furnace - operate by pressing nitrogen gas through the plumbing system to the experiment coolers.

There are three check valves (V1, V2, V3) - one for each pump - controlling the gas flow direction in the plumbing system.

The heated gas is transported from the experiment cooler to an energy buffer store. This is a cylindrical box of diameter 456 mm and height 50 mm with copper pipe plumbing (see figure 10) and the free volume filled with a phase change material. In this case we have chosen paraffin with melting point 56-58°C because of its high latent heat and rather low weight (around 6 kg is needed). The energy stored in paraffin buffer is radiated to space via the GAS experiment mounting plate.

The experiments are run in sequence. When experiment no 1 is on pump P1 forces nitrogen gas via check valve V1 to the cooler C1. The gas flows further on through cooler C2 and C3 and then through the energy buffer store, where the gas is cooled down to around 50°C before flowing back into the free volume of the cannister.

The coolers in the experiment furnaces are built of copper plates with grooves for the gas flow according to figure 11. The plates are stacked onto each other. With this design of the cooler the optimum performance regarding isothermality and high gas flow capacity is achieved.

5.4 Structure

The structure is built with three aluminium struts (fig. 4 and 12) positioned between the energy buffer store (EBS) and the battery package. The GAS experiment mounting plate is screwed on to the EBS container in the 24 holes spaced on 19" diameter.

The struts are made of hollow aluminium type 6063 profiles (75 x 25 mm, wall thickness 2 mm). The experiment furnaces together with the cooling system and some of the electronic systems will be mounted between the battery box and the EBS. The furnaces package with the insulation are mounted between two honeycomb aluminium (Metawell 05-02-05, Al6063) decks. The temperature monitoring electronics, the pumps and a power box are situated on opposite side of one support deck.

On the cover of the battery box the data handling and storage system boxes as well as the control electronic box are placed. These boxes will be available from outside without any necessity to disassemble other parts in the container.

5.5 Electronic System

To control the experiments and to monitor experiment and house-keeping signals the following electronic blocks are built (see block diagram in figure 13):

- Experiment temperature sensing systems: TE1, TE2, TE3
- Control Electronic system: CE
- Micro-g sensor electronic system; μ-g
- Temperature sensing system for the Energy Buffer Store (EBS): TEB

During the cooling phase the control system (CE) regulates the power to the hot side heater and the gas flow, i.e. the number of revolutions of the gas pumps. The signal from the thermocouple on the hot side (Th) in the sample controls the hot side heater. The signal from the thermocouple on the cold side (Tc) is compared with Th. The difference T_h-T_c is the temperature gradient controlling the speed of the pump, and thus the gas flow, towards the desired gradient of 20°C.

The microgravity sensing system has three accelerometers placed in three orthogonal directions. The accelerometers used are purchased from Sundstrand and have the designation servo accelerometer type QA 2000-001 with a triaxial adapter type MB2000 Q-flex. The accelerometer signals are amplified and sent to the data handling unit. Also ambient temperature signals in the accelerometer unit are sensed and registrated in the data handling unit.

The temperature in the energy buffer store (EBS) is sensed by two thermal sensors. The signals from these sensors are fed to the electronic control system, where it may delay the switching on of the experiments. The paraffin in the EBS has to be solidified before an experiment is started up, meaning that the temperature must be below 45°C.

5.6 Data handling and storage system

The experiment and house-keeping data will be fed to the four data aquisition units, one for each experiment and one for house-keeping.

The timers

The data acquisition system is controlled by four timers. Which are started on the power-on command.

Data acquisition system

The data acquisition system (DAS) consists of four independent subsystems. Each subsystem has 32 single ended analog inputs. Each system delivers 14 bits data to the memory unit.

In each subsystem the channel sampling pattern is determined by a programmable memory. The memory contains four different formats, which are changed during the experiment process to increase the sampling rate on channels of special interest.

Data storage unit

The data storage unit (DSU) is a solid state device using static N-channel MOS erasable and electrically programmable read only memories (EPROM's).

In read and erase mode the DSU is removed and inserted into a Data Readout unit. After reading an automatic erase- and check sequence can be activated.

The timers, DAS:s and DSU:s for experiment 1 and 2 are integrated into one electronic box placed on the battery deck; the corresponding units for experiment 3/4 and the housekeeping systems are built into the second of the three electronic boxes (figure 4).

5.7 Energy system

The Swedish Space Corporation (SSC) proposes to use a special sort of Lithium batteries for this payload. The type of Lithium batteries are superior to other battery systems with respect to energy density (as a function of volume or weight), ease of handling, low self discharge, and high safety standards.

Lithium for the anode, polycarbonmonofluoride for the cathode and an organic electrolyte form the battery cell. Polycarbonmonofluoride is a chemically and thermally stable solid material. The batteries are highly safe compared with other lithium batteries which use corrosive and toxic active liquid material ($SOCl_2$) or active gaseous material (SO_2).

Due to the high power requirements (around 3300 Wh) of the payload a great effort was put into an investigation of available batteries. The National/Panasonic batteries $Li(CF)_n$, model BR-C, were selected because they are inherently safe and meet the experiment power requirements. This battery is <u>not</u> to be confused with Lithium/Sulphur-oxychloride batteries which are referred to as hazardous in NASA Reference Publication 1099 (dated November 1982).

The battery consists of 378 primary lithium-polycarbonmonofluoride cells connected in 14 parallel branches with 27 cells in each branch. Mechanically the cells are contained in 7 cylindrical boxes mounted on a common deck with full payload diameter 501.6 mm (or 19.75"). The protection and current limiting electronics is mounted in this deck. The upper side of the deck serves also as a mounting surface for some experiment subsystems (see figure 14).

Inside the battery a number of protection devices are used in such a way that no possible failure mode or combinations of different failures could cause a safety hazard.

In the table below we have made comparison between different battery systems. For each system we have given the energy density (capacity per weight unit) and the required weight of the cells (N.B. the cover and venting system, when required, are not included) to fulfil the energy demands from the payload. The data comes from information from the different battery manufacturers. The data is consistent with the battery data given in the GAS ("red book") handbook.

Battery type	Energy density Wh/kg	Necessary cell weight (kg)
Lead-acid	25	128
Ni-Cd (high capacity)	35	91
Ag-Zn	60	53
Alkaline (primary)	50	64
Lithium $(Li/CF)_n$		
low discharge rate	260	12
high discharge rate	180	18

our case

It is clear that none of the cell types, except the lithium Li/CF_n batteries, are a realistic alternative in our case.

The reasons to choose the BR-C lithium-polycarbonmonofluoride cells are summarized here:

- low weight and volume per capacity unit (best when compared to other battery systems),

- simplified handling compared to Ag/Zn cells,

- lower safety risks than Ag/Zn cells,

- no storage problems
  The storage time for the selected lithium cells is 10 years; to be compared to 3 months for electrolyte-filled Ag/Zn cells.

The drawbacks of the selected lithium cells are

- no recharge capability (but instead 10 years life cycle time which means a very low self discharge),

- rather low current capability (this drawback is compensated for by connecting in parallel, in our case, 14 cell packages).

5.8 Weight budget

The following table gives the weight budget for the payload:

Items	Weight kg	Total
Energy system		
(Battery with box and cover)	36.0	36.0
Energy Buffer Store		
Paraffin	5.0	
Box and cover	2.0	9.0
Cooler	2.0	

Struts (3 pcs)	3 x 0.5	1.5
Experiment system		
Sample	8.0	
Graphite crucibles	4.5	
Insulation	3.0	20.0
Experiment cooler	2.5	
Mounting plate	1.0	
Mounting details	1.0	
Gas cooling system	3.0	3.0
Zero-g sensors with electronics	1.0	1.0
Temperature sensing electronics	1.0	1.0
Data handling system		
DSU	2.0	
DAS	2.0	7.0
Power unit	3.0	
Control electronics	3.0	3.0
Miscellaneous		
(Nuts, bolts, cabling, piping)	2.0	2.0
	Total	83.5
	Margin	7.3
	Allowed weight	90.8

6 A complicated payload

This first mini-foundry in space is a complicated payload with high power and heat rejection requirements. However the developed concept seems to be in accordance with the experiment requirements. SSC is now waiting for acceptance of the final safety data package. The payload is on the tentative primary flight list for STS61-C, currently scheduled for December 20, 1985.

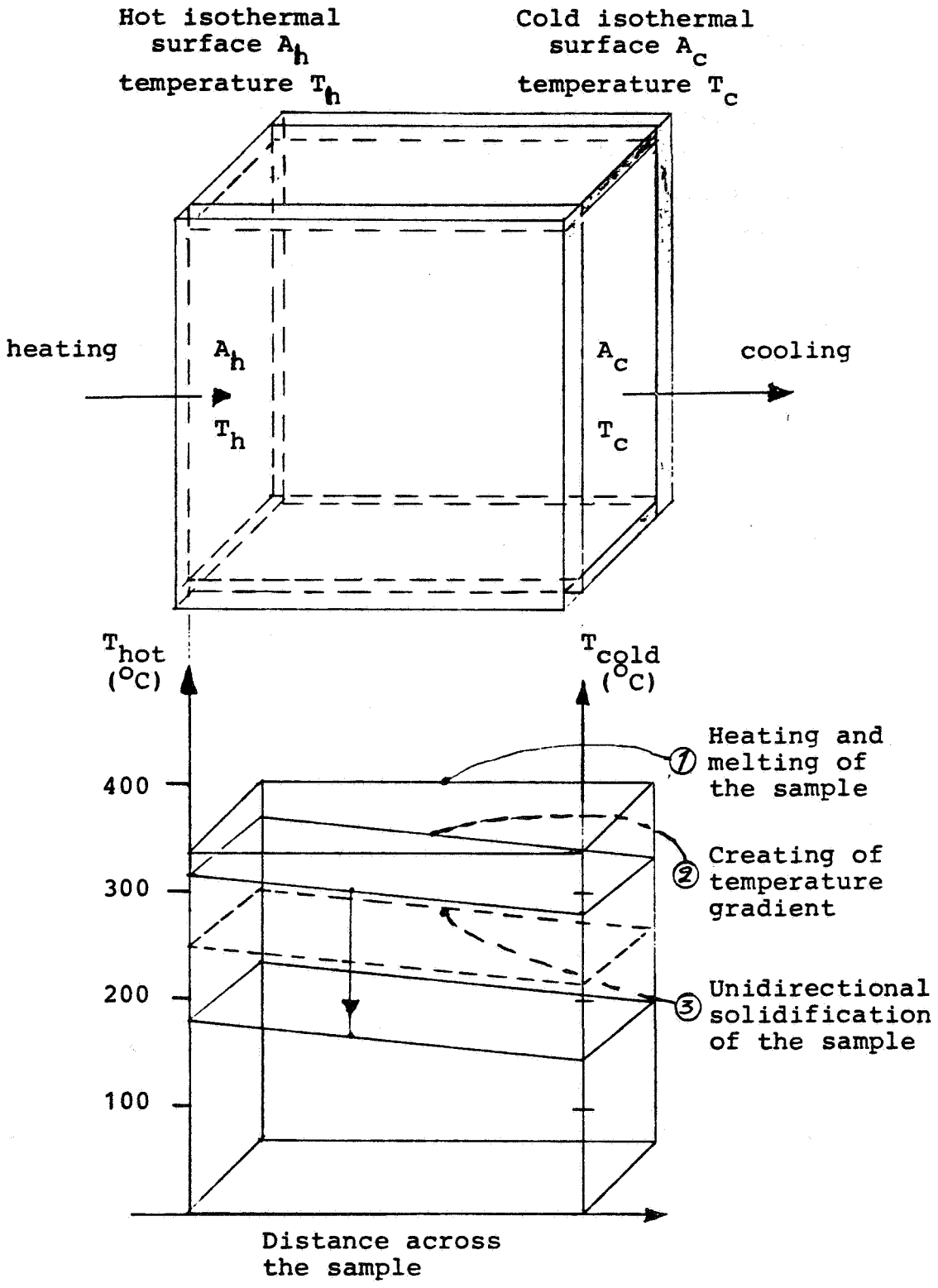

Figure 1. Principal experimental idea: solidification studies.

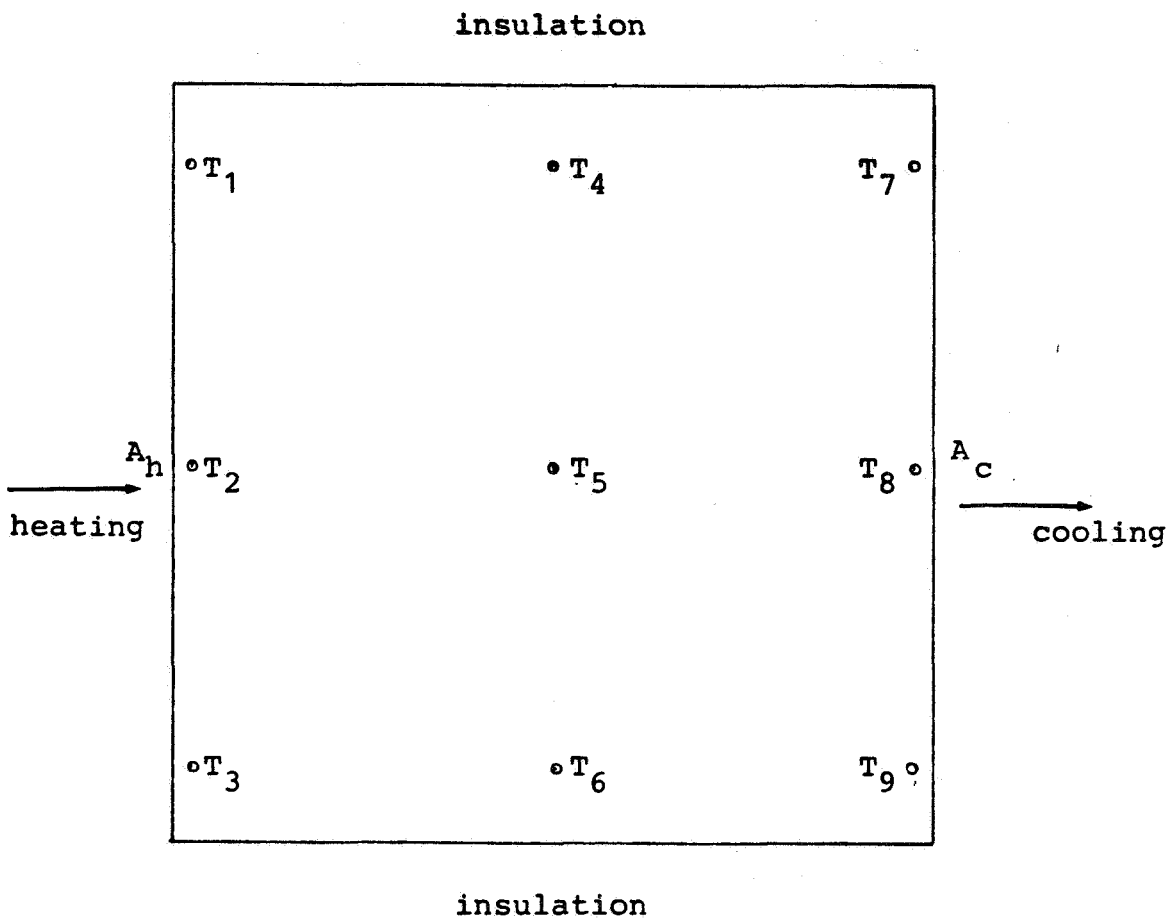

T_1-T_2-T_3 monitor the temperature distribution at the hot side A_h

T_7-T_8-T_9 monitor the temperature distribution at the cold side A_c

T_2-T_8 gives the temperature gradient

Figure 2. Distribution within the sample of temperature monitoring Chromel-Alumel thermocouples.

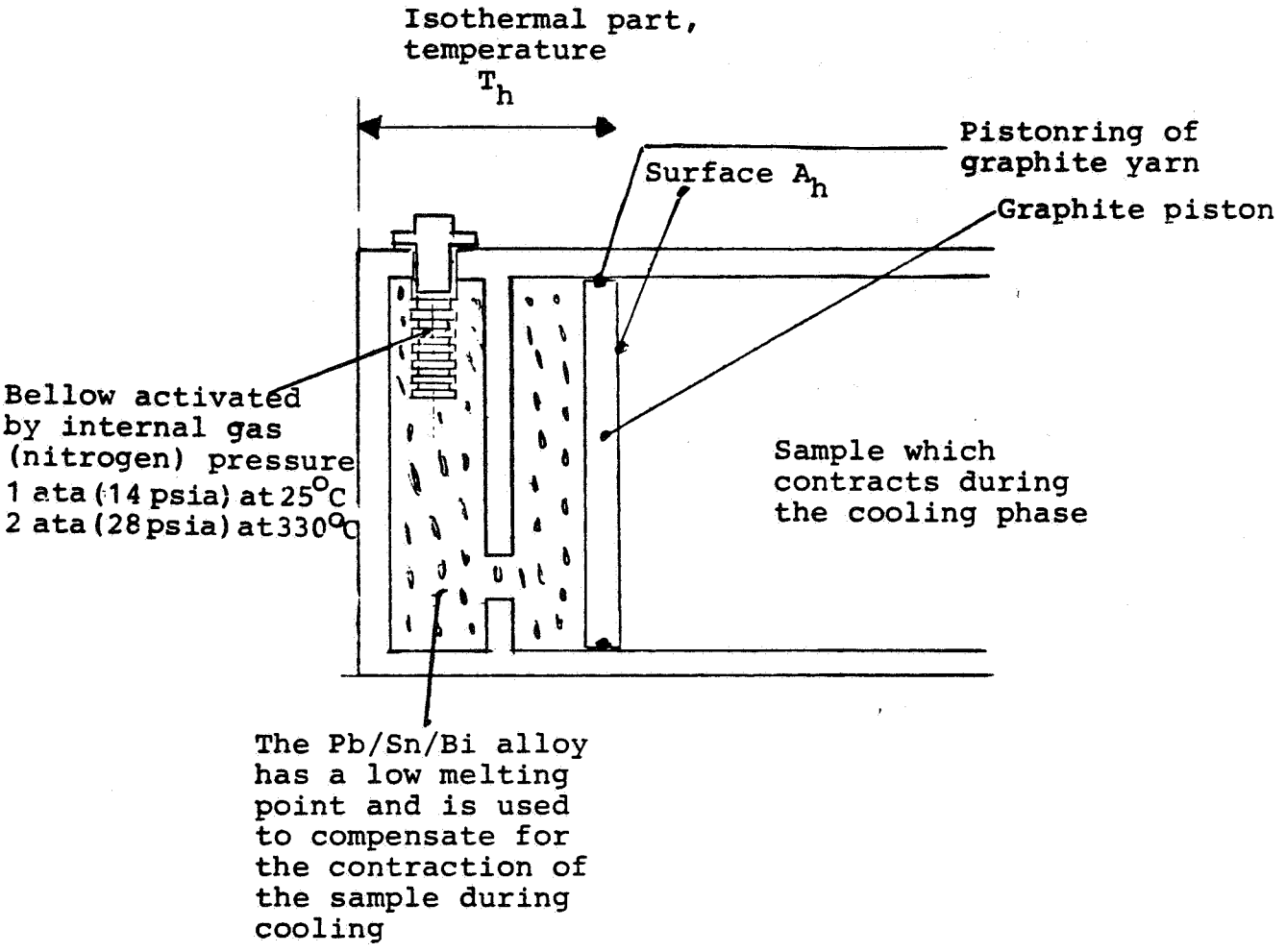

Figure 3. Mechanism, compensating for contraction of the sample – principal view.

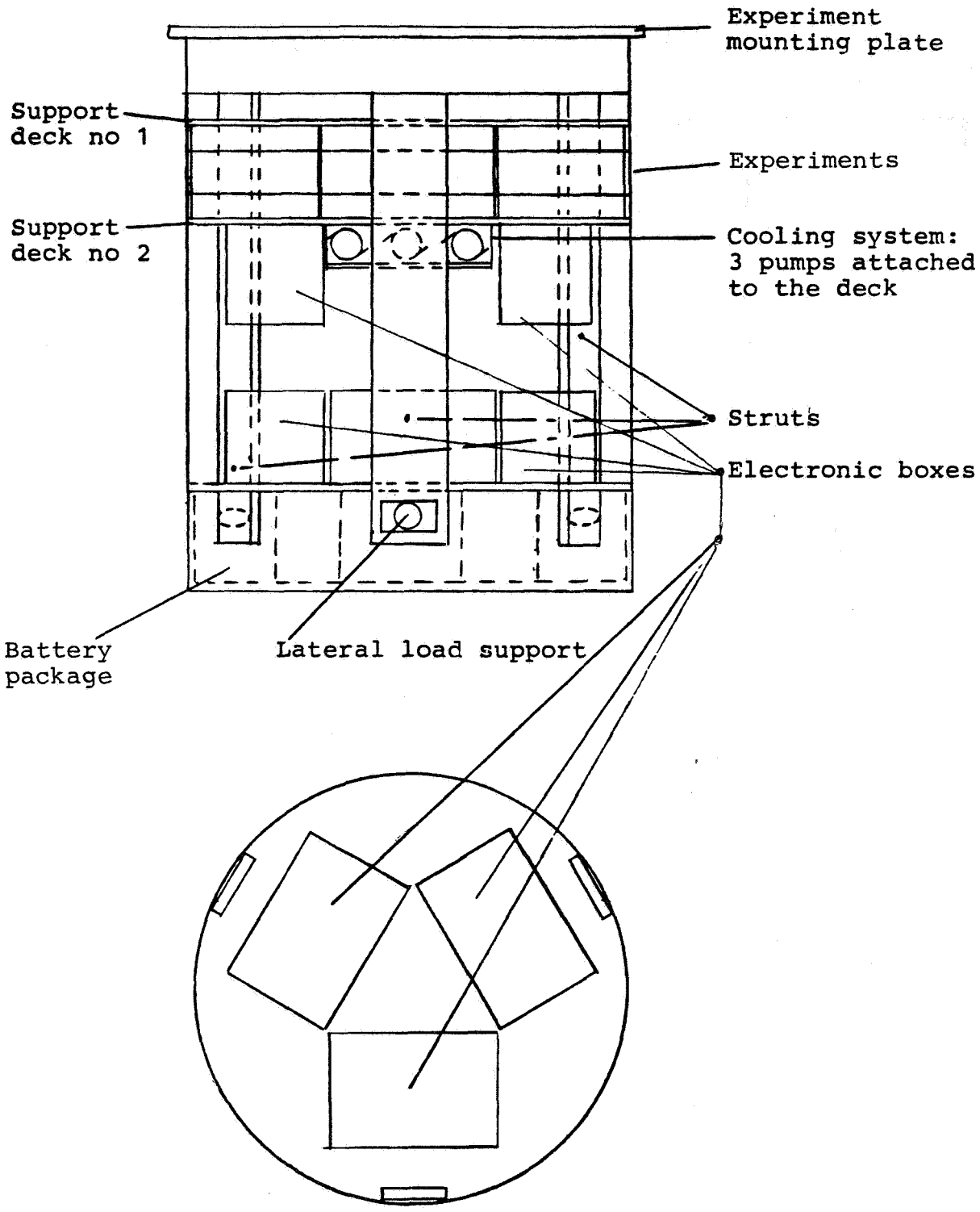

Figure 4. The configuration of the subsystems of the payload.

Sample length 100 mm

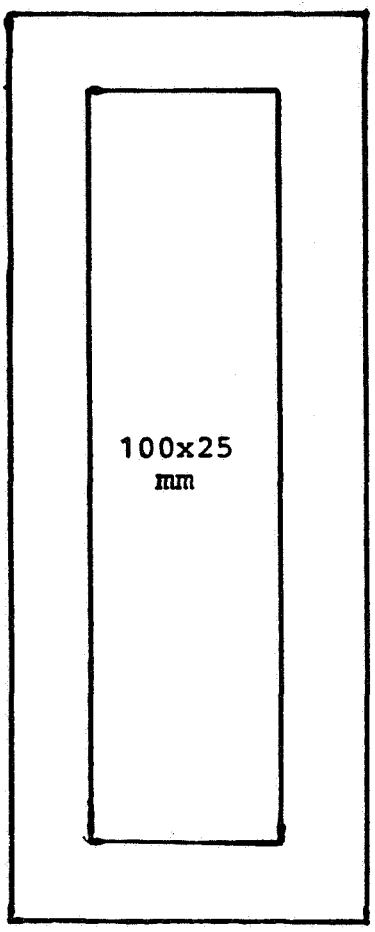

Crucible used
for processing of
a 100 x 100 x 25 mm
sample

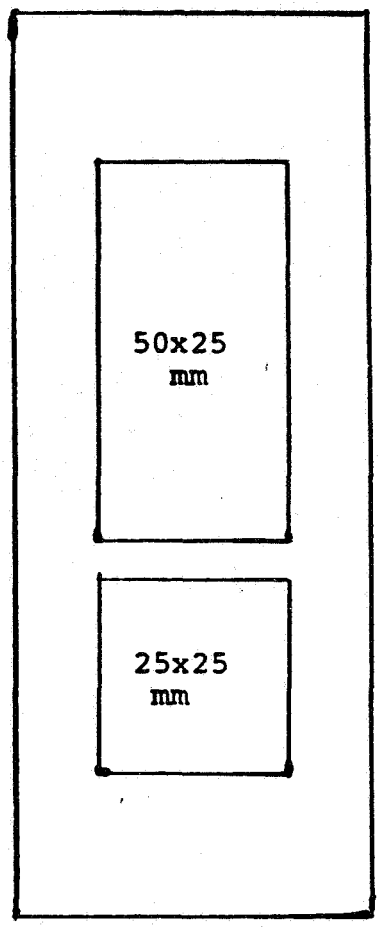

Crucible used for
simultaneous processing
of two samples of the
dimensions

100 x 50 x 25 mm
100 x 25 x 25 mm

Figure 5. Cross section view of the two types of graphite crucibles used for the experiment samples.

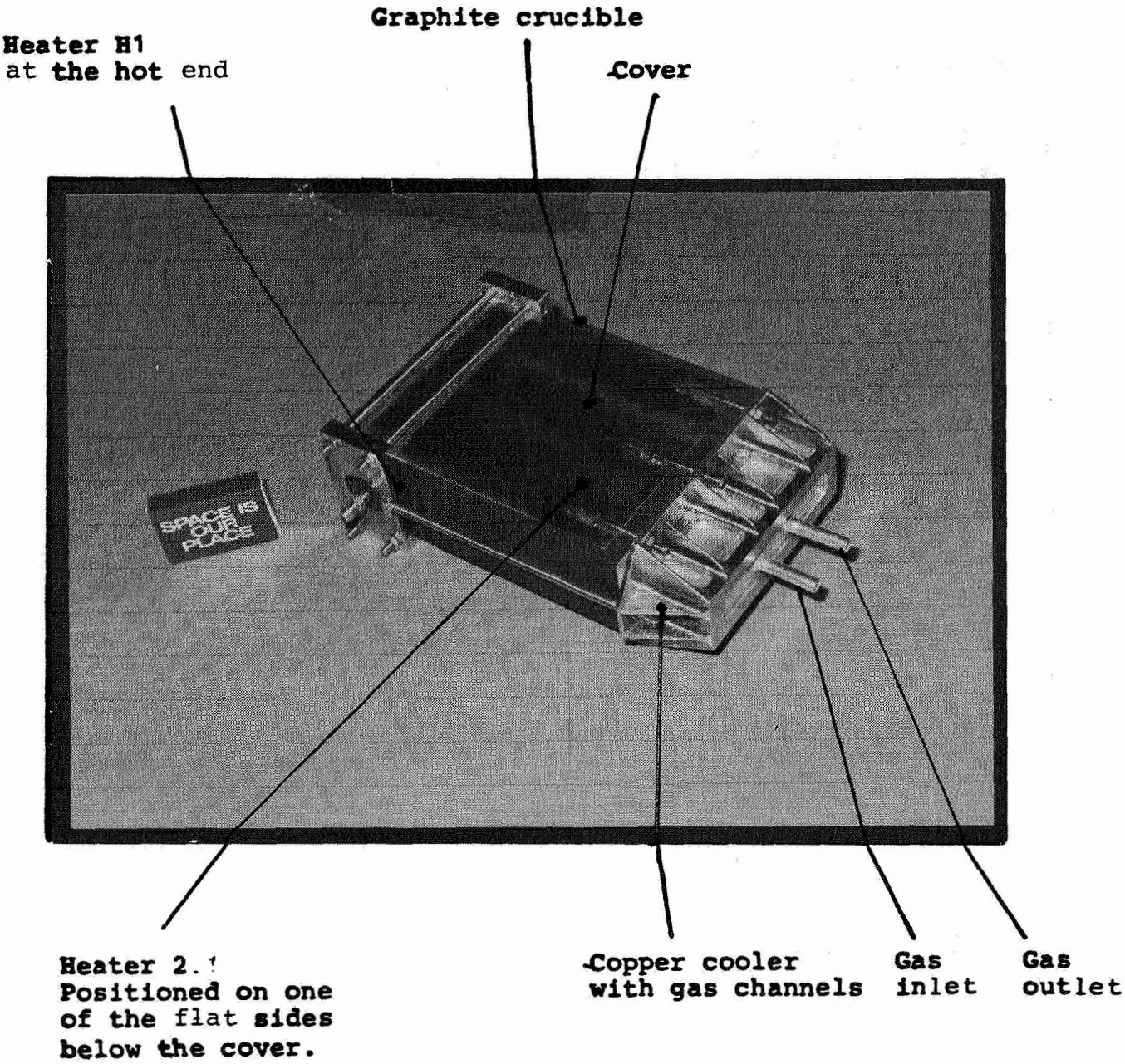

Figure 6. Experiment furnace.

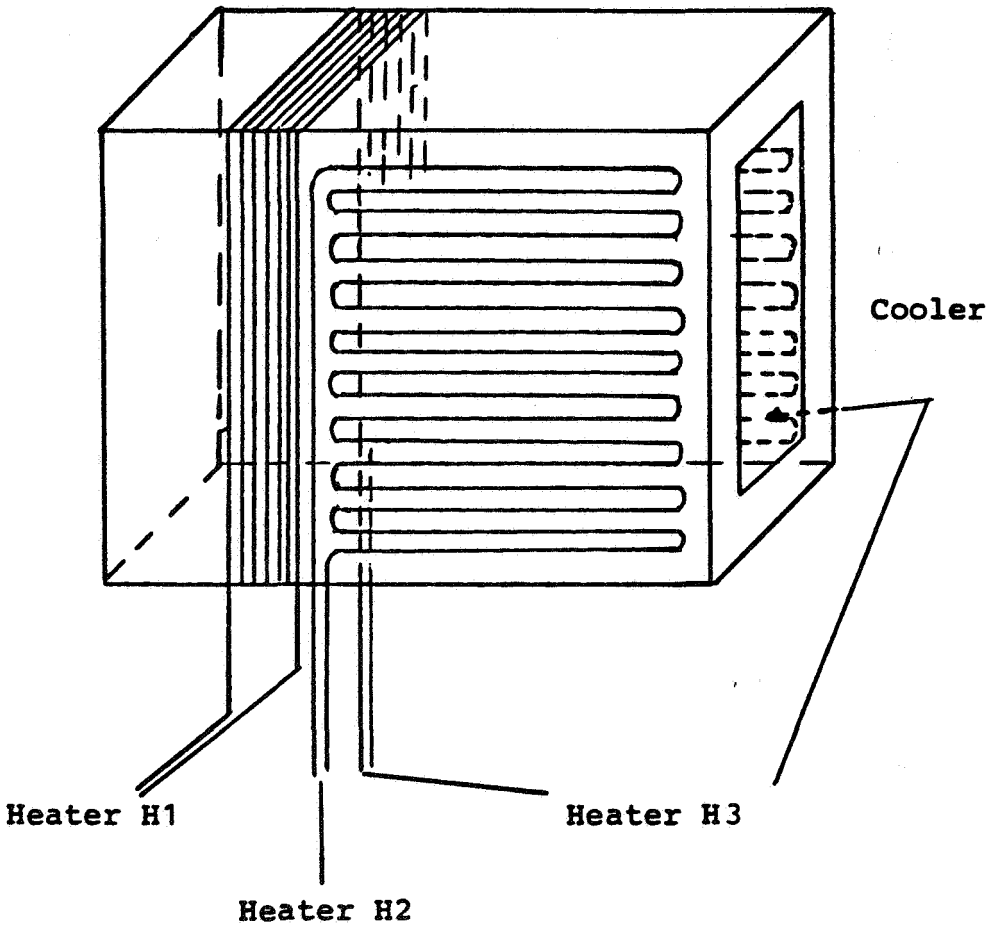

Figure 7. Heater Positioning.

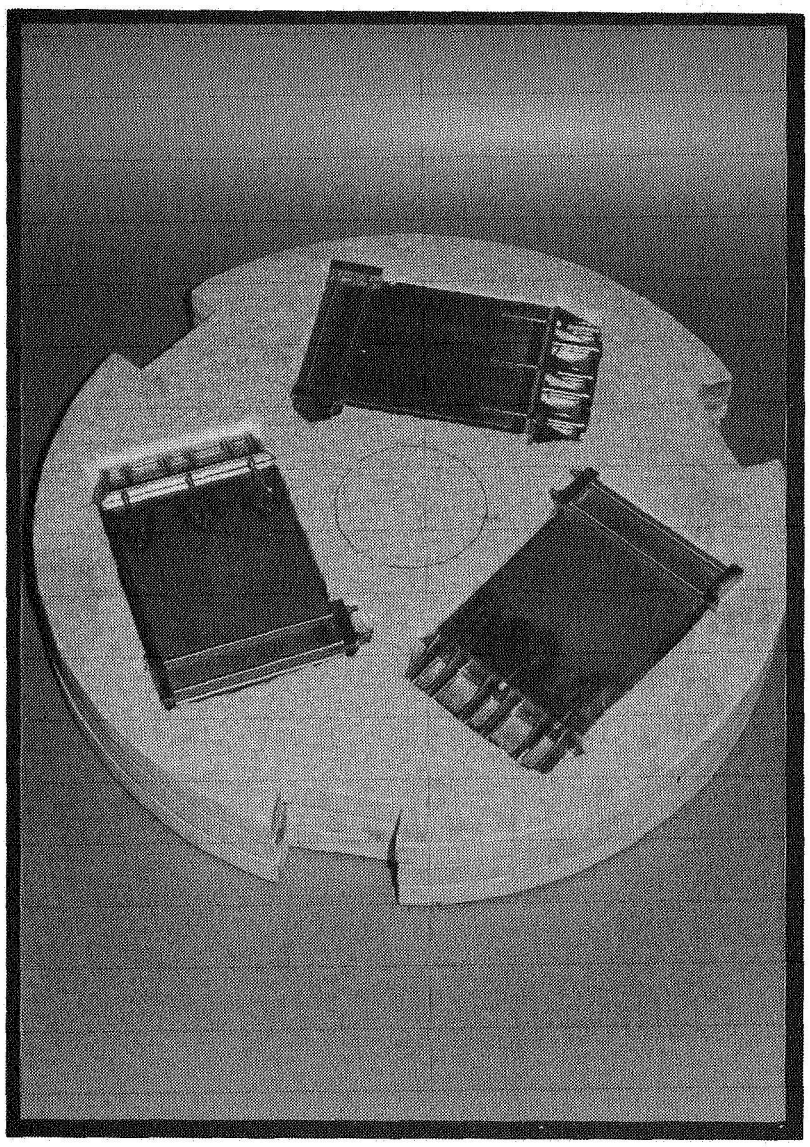

Figure 8. Insulation material around the three furnaces (four blocks are used, three are visible on the photo).

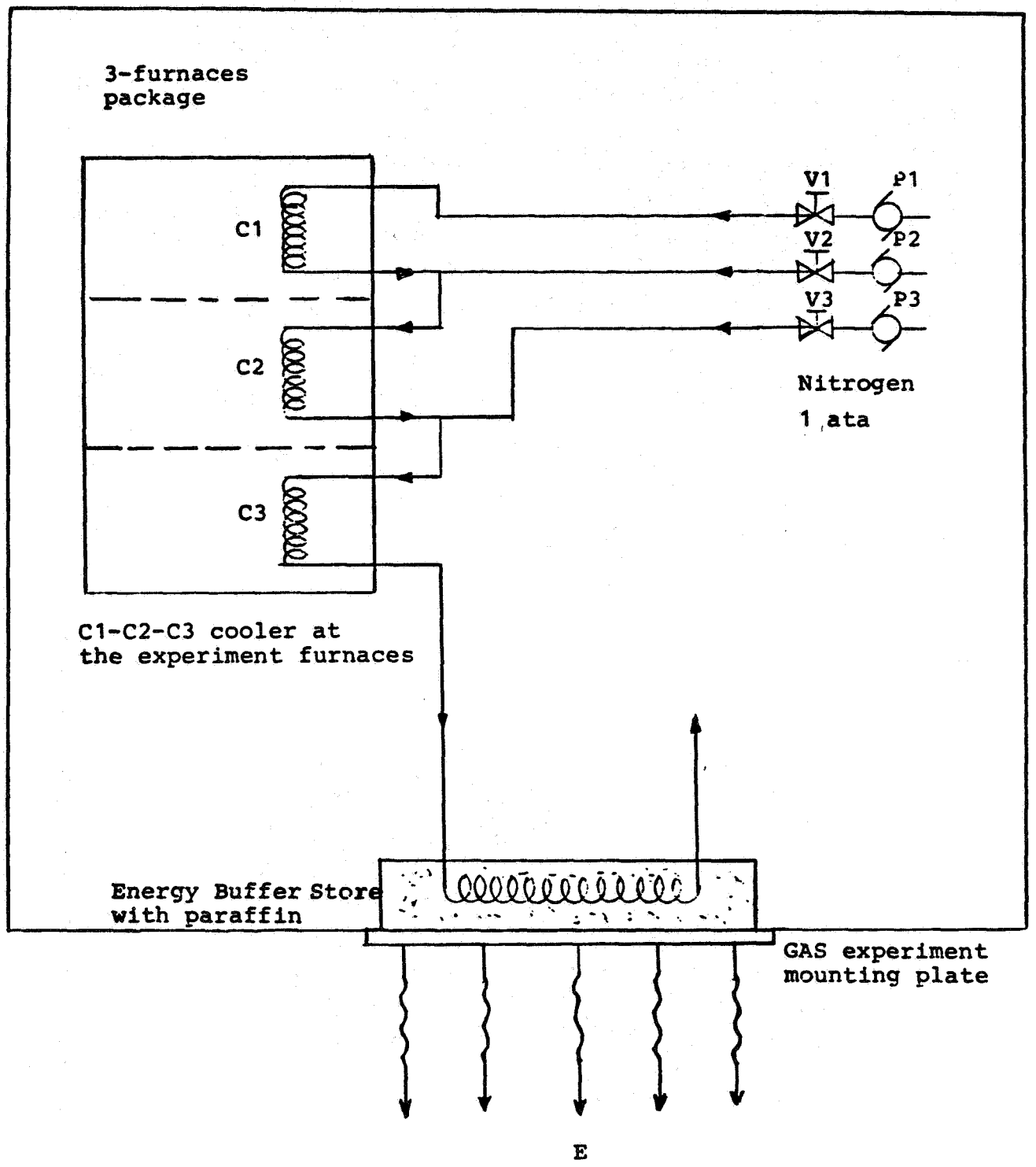

Figure 9. Principle for the cooling system.

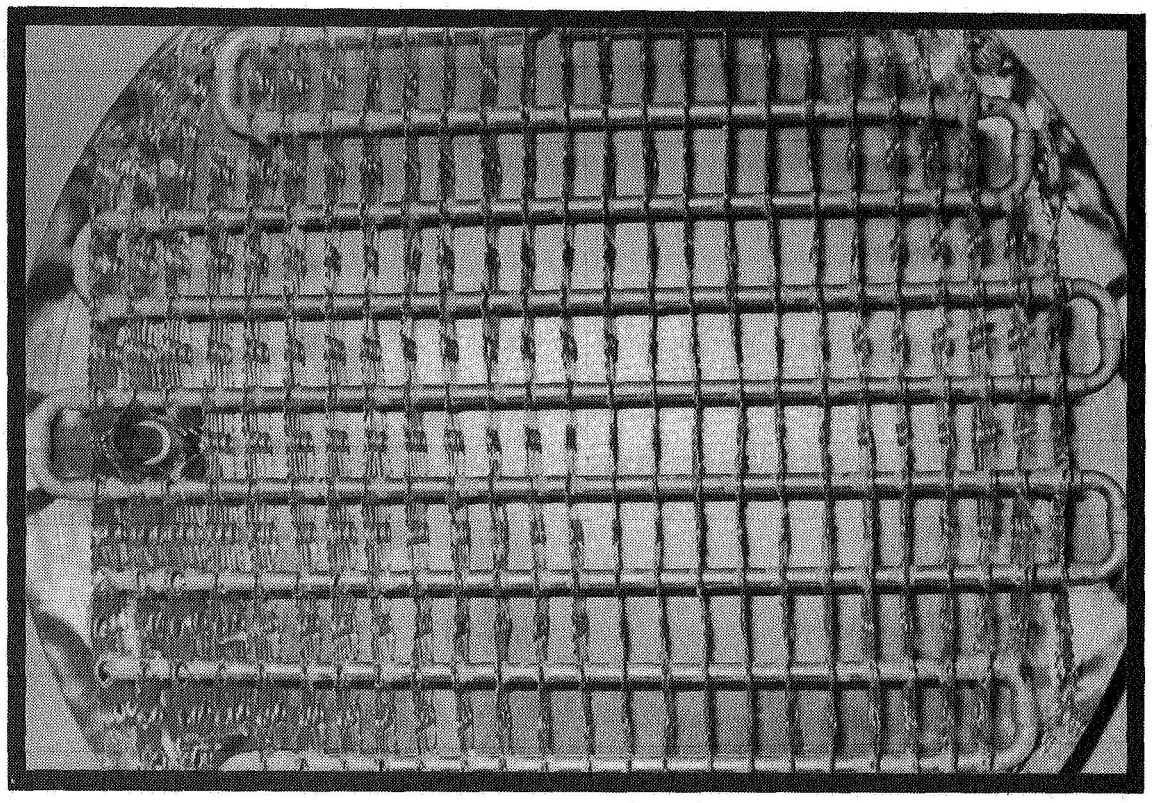

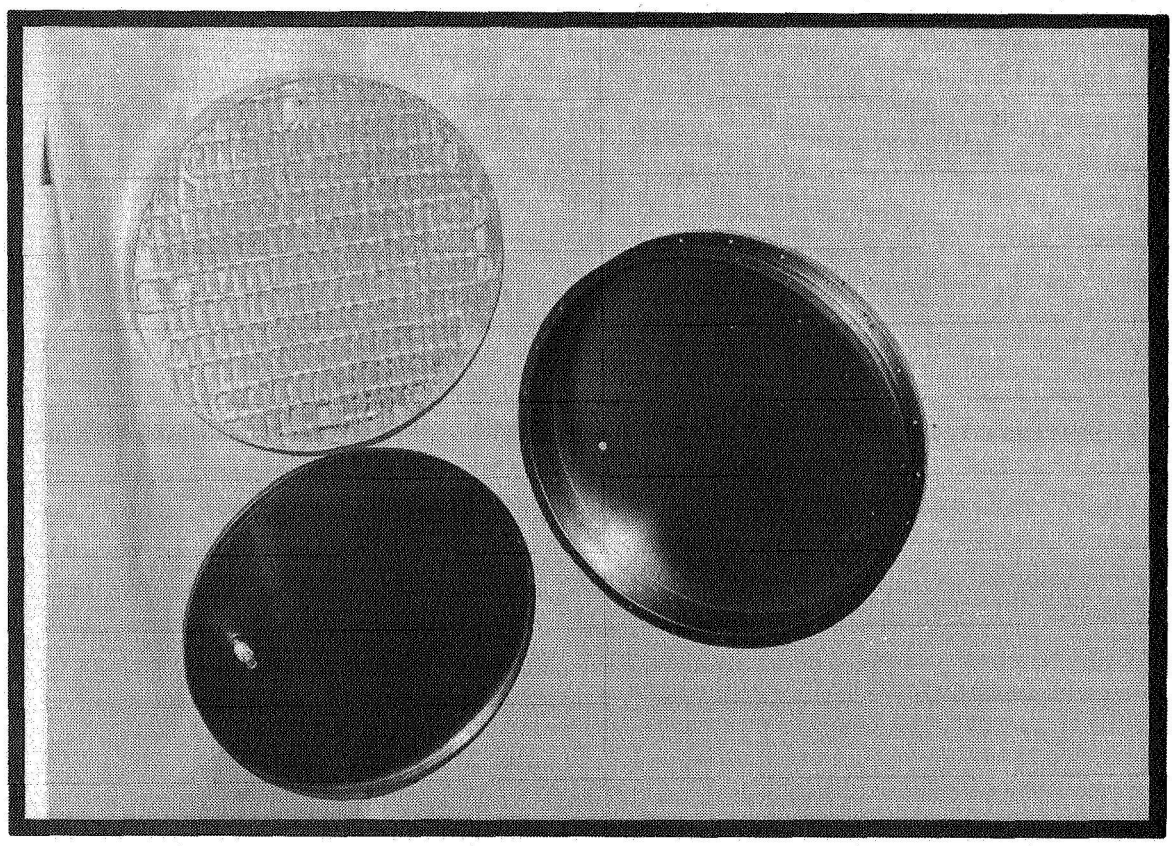

The plumbing system with copper tubes and flanges. The box is not filled with the phase change material (paraffin).

Figure 10. Energy buffer store.

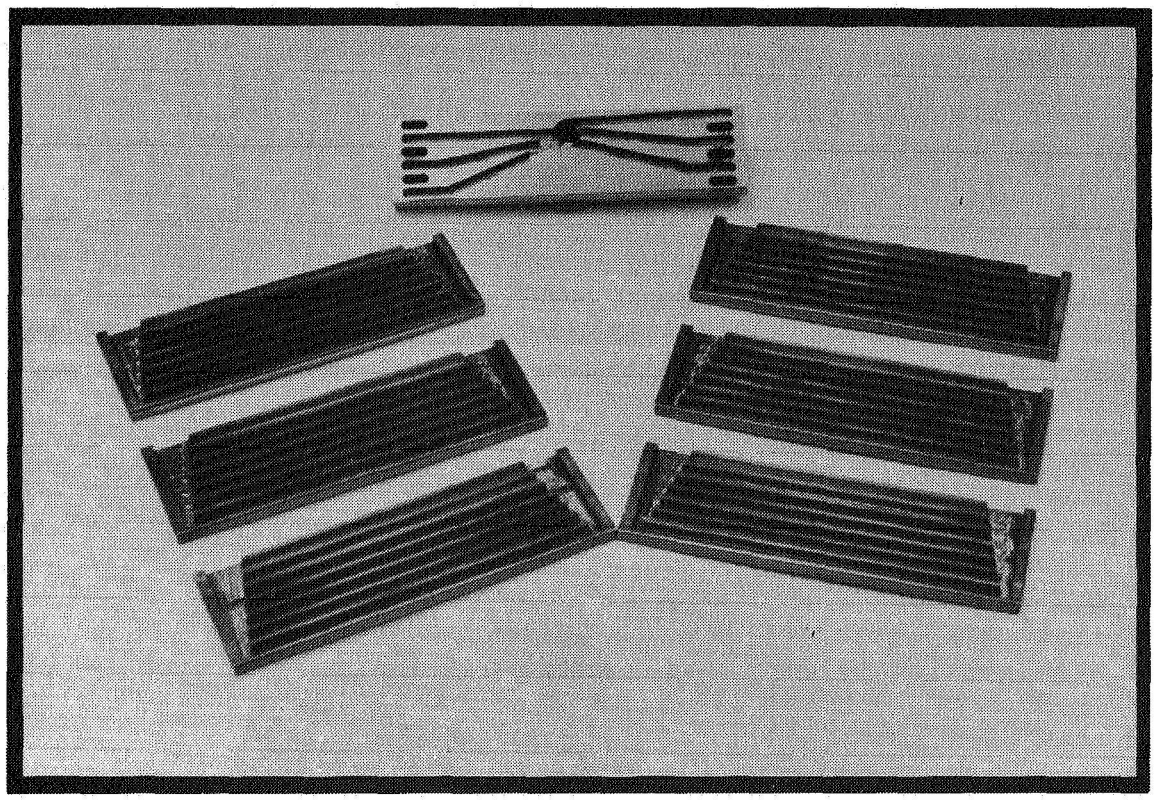

Figure 11. Cooler components showing the copper plates with grooves.

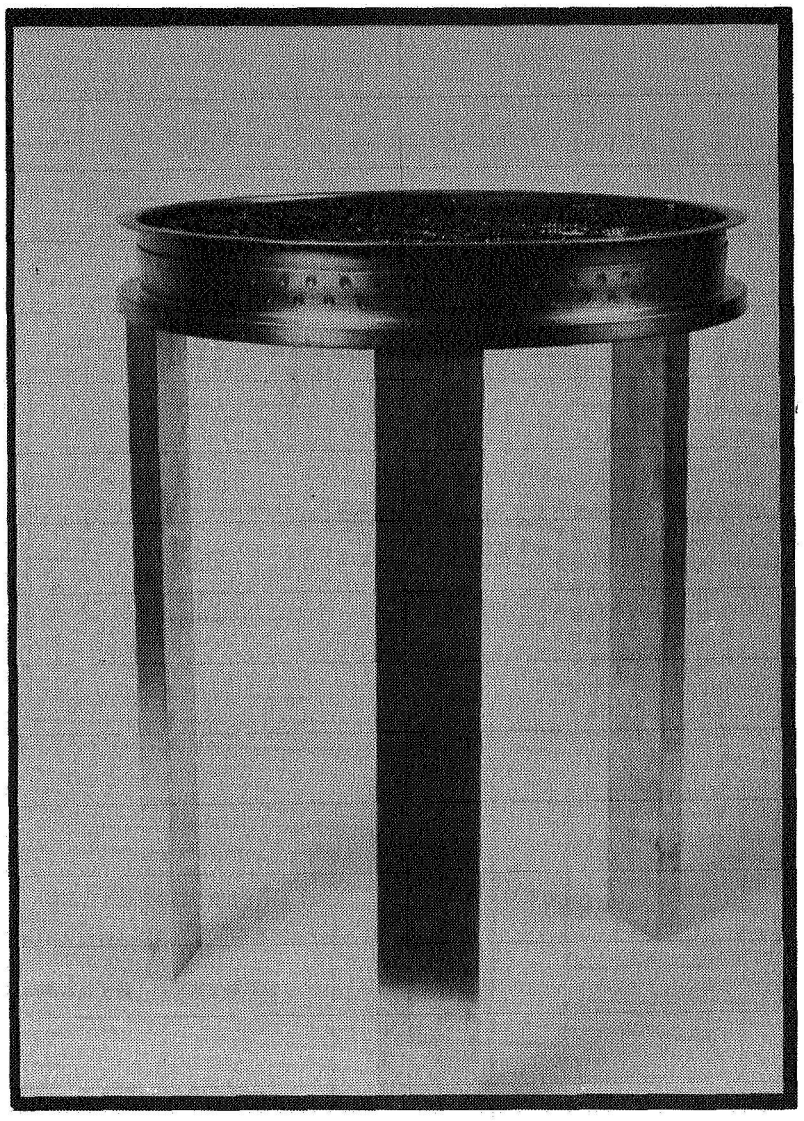

Figure 12. The three struts attached to the energy buffer store (EBS).

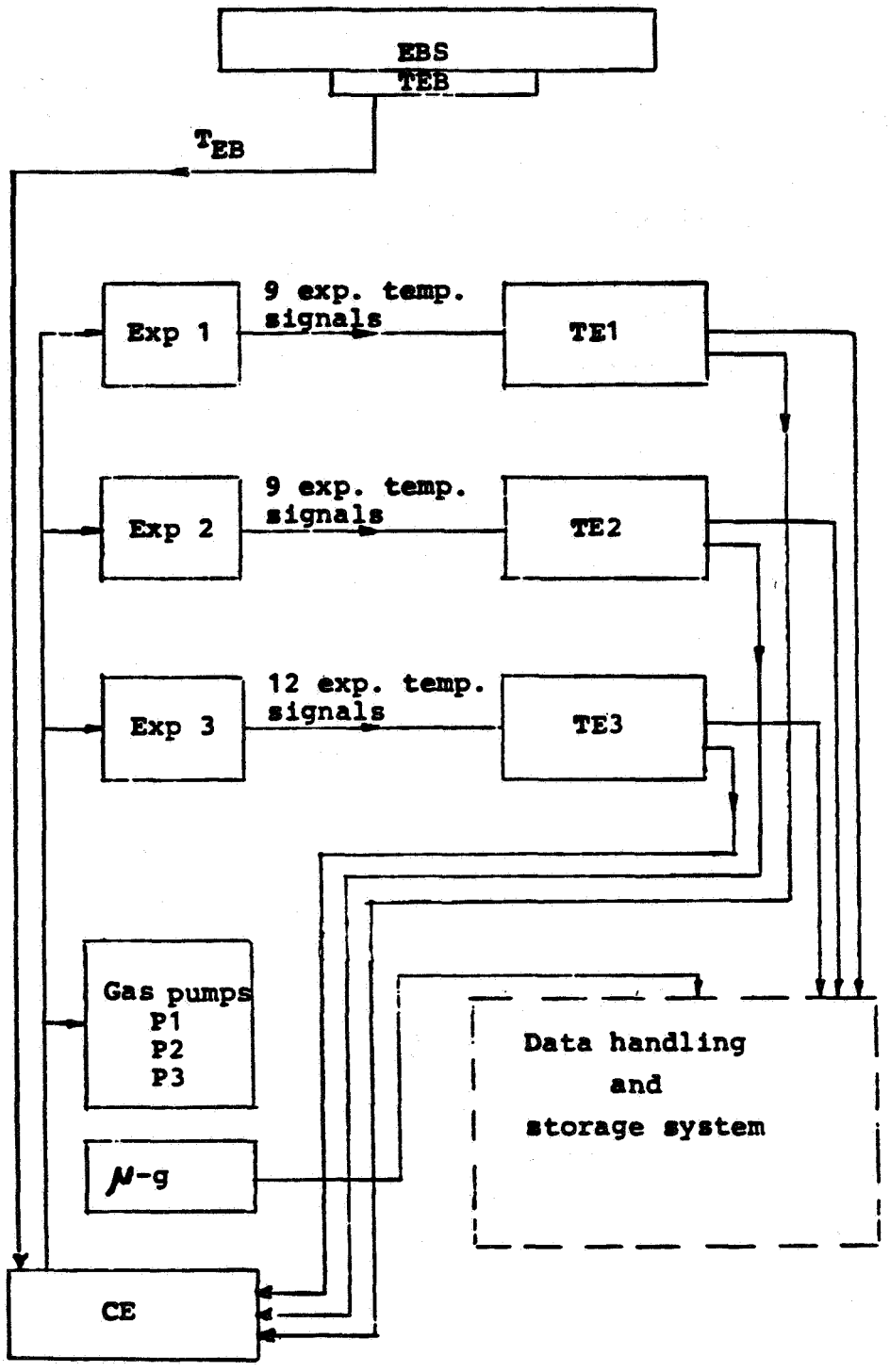

TE Temperature sensing Experiment

TEB Temperature sensing Energy Buffer

μ-g Micro-g sensing system

CE Control Electronic system

Figure 13. Electronic system.

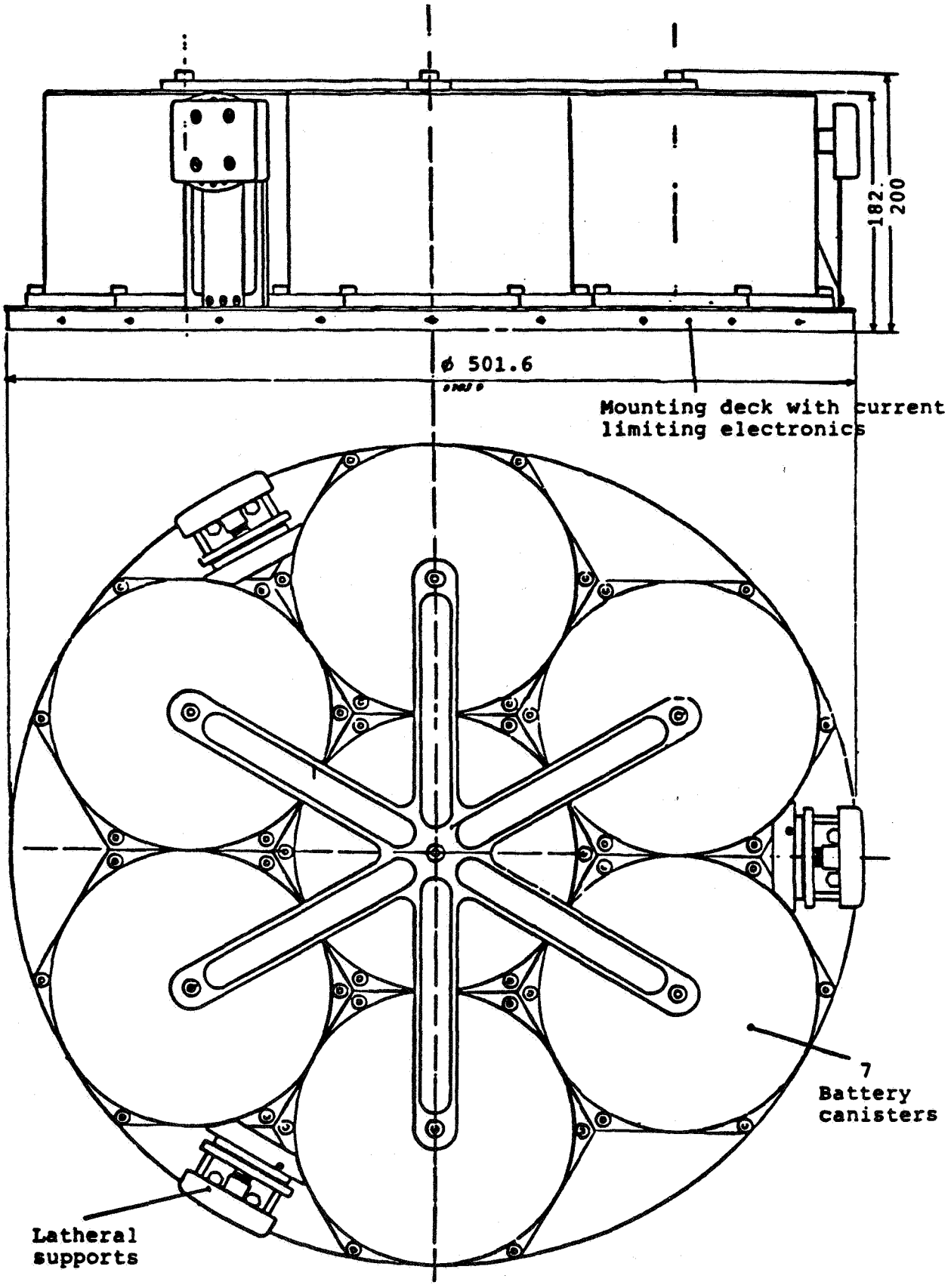

Figure 14. Outline drawing giving the dimensions of the battery system.