THERMOCAPILLARY FLOW AND GASEOUS CONVECTION IN MICROGRAVITY: RESULTS FROM GAS PAYLOAD G-0518

Scott Thomas
Utah State University
Center for Atmospheric and Space Science
UMC 34
Logan, Utah 84322

Abstract: Thermocapillary flow and gaseous convection in microgravity were investigated in GAS payload G-0518 during Space Shuttle mission 41-D. A cylinder of paraffin was supported and heated differentially from its ends to induce a melt from solid to liquid and drive thermocapillary flow in the resulting liquid phase. Laminar thermocapillary flow was observed in the liquid pariffin and found to show a transtion to time-dependent oscillatory motion at a Marangoni number of about Ma=34000 with a period of approxiamately T=8 seconds. In addition, free convection in a gas in microgravity has been observed for the first time. The gaseous convection was caused by the thermal and/or velocity boundary layers present at the heater-liquid interface. Oscillations occured in the gaseous convection simultaneously with those in the liquid, implying the two are strongly coupled. The gaseous convection may be driven by coupled thermocapillary flow / thermal expansion convection or microgravity bouyancy convection.

Introduction

The technology of processing materials in space requires a knowledge of the convective flows that can occur in a fluid in microgravity. Probably the most significant type of convective flow in microgravity is that caused by thermally induced surface tension gradients along a liquid-gas interface, thermocapillary flow. Other types of convection in microgravity may also prove to be important to materials prcessing (ref. 1). The experimental study of thermocapillary flow (or any type of convection important to materials processing in space) in 1-g on the earth is impeded by the simultaneous existance of bouyancy convection caused by thermally induced density gradients. Experiments in microgravity are therefore desirable to study thermocapillary flow and its applications to materials processing in space. This experiment was designed to study thermocapillary

flow in a cylinder of paraffin supported and differentially heated at its ends (fig. 1); a system analogous to a float zone used in crystal growth (fig. 2).

The surface tension of a liquid decreases with temperature so a temperature gradient along a free surface causes a surface tension gradient which in turn causes surface tractions. These surface tractions are balanced by viscous shear stresses which induce motion in the liquid. The dimensionless number describing the magnitude of this phenomenon is the Marangoni number

$$Ma = dS/dT \; DT \; d \; / \; u \; K$$

where dS/dT is the temperature coefficient of surface tension, DT =(T2-T1) is the temperature difference across the surface, d is the length of free surface from T1 to T2, u is the absolute viscosity, and K is the thermal diffusivity. It is known experimentally (ref. 2) and theoretically (ref. 3) that for small Ma simple time independent laminar flow occurs . It is also known experimentally, both from ground experiments (ref. 4) and from sounding rocket experiments (ref. 5), that for large Ma (Ma >= 10000) the flow shows a transtion to time dependent oscillatory flow (fig. 3). It is not known exactly how or why this instability from laminar to oscillatory flow occurs and the precise planform of the instability in micorgravity is not known although preliminary results have been obtained (ref. 5 & 6).

As mentioned above other types of fluid convection in microgravity may be important or significant. These include, among others, microgravity bouyancy convection, g-jitter convection, and thermal expansion convection. These have been studied theoretically and experimentally for simple geometries and boundary conditions (ref. 7) and found to be insignificant. But as Ostrach points out (ref. 8) boundary conditions and geometric configuration may be a dominant factor in determining significance of some types of convection in microgravity. The boundary conditions which exist between a cylinder of liquid undergoing high Ma thermocapillary flow and its surronding gas (discussed below) have not previously been applied to the types of convection mentioned above. The author has carried out a preliminary analysis of possible convection in the surronding gas using the pertinent boundary conditions to the system studied here and found significant flow can occur in the surronding gas. (ref. 9).

This paper reports on the observation of laminar and time dependent thermocapillary flow and gaseous convection in microgravity for a differentially heated cylinder of paraffin surronded by a gas.

Apparatus

The appartus consists of support and control electronics and hardware for the basic experiment mounted in a fiberglass epoxy hexagonal tray. The hexagonal tray is mated to two others and bolted to the upper lid of a half size GAS canister. Electrical power for the various experiment systems is supplied by 2.5 amp-hour Gates lead acid cells. The experiment is controlled by a

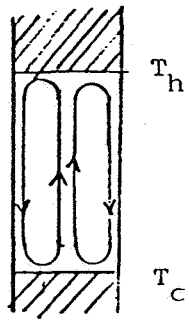

Fig. 1 Thermocapillary flow in a differentially heated free floating cylinder of liquid supported at its ends

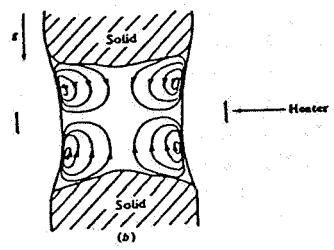

Fig. 2 Thermocapillary flow in a float zone

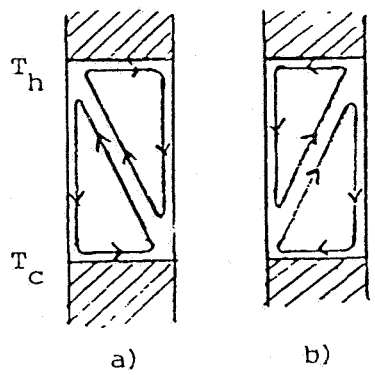

Fig. 3 Oscillatory thermocapillary flow in which the flow pattern oscillates between a) and b)

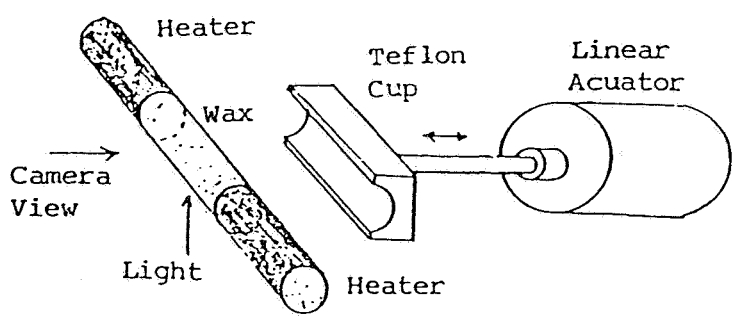

Fig. 4 Schematic representaion of experiment

C6502 microprocessor based controller/sequencer with a 16 channel 8 bit A/D converter, 8 bit digital input, 8 digital control outputs, and 32k of onboard EPROM memory for data storage (ref.10).

The basic experiment consists of a solid cylinder of paraffin (length = 1.5 cm diameter = .635 cm) supported and heated differentially at its ends. The cylinder is supported for launch by two teflon cups which are retracted by linear acuators once in orbit. The liquid flows are visualized by means of suspended tracer particles illuminated by a light cut and recorded by an 8mm movie camera (fig. 4). Four different framing rates are used for the camera to allow more pictures during "intersesting" periods of the experiment. An LED light in the field of view of the camera is activated during a framing rate change to allow an experiment real time to play back time conversion of the movie film. Ambient and heater/support temperatures, battery voltages, light level, and time are recorded by the controller; frame number is also recorded with the time to allow a correspondence to be made between frame number and temperature. Framing rate and heater power are actively controlled by the controller within time limits on the basis of heater temperature and frame number, e.g. if temperature 1 too low after 2 min., switch to a higher heating rate, e.g. if frame number too large (near end of film), switch to slower framing rate. The use of a smart controller allows more and selective data to be obtained.

Results

The GAS canister was turned on at 34 hours 9 min. mission elapsed time. After an initial half hour "warm up" period two seperate experiment runs, with a period of one hour cool down between, were to be executed. Digital data, i.e. temperature, voltage, and light level, was obtained for both runs. Visual data was recorded only for the second run. The failure has since been traced to an itermittently faulty relay which apperently failed to acuated the camera during the first run. Ambient temperature data was recorded for about 35 hours before the controller battery went dead (fig. 5). All the planned data for the second experiment run and ambient temperature data were obtained and so the experiment is considered a success.

For the second run 6 watts of power was applied to heater #2 and heater #1 was left at 0 power. The paraffin melted with the solidliquid interface advancing as anticipated. No boundary layer flow near the solidliquid interface was observed, implying that no significant phase change convection occured. The total length of the liquid bridge was extracted from the film as a function of time and is given in fig. 6. The total length of paraffin did not melt during the experiment but grew asymptotically to 1.27 cm leaving .23 cm of solid paraffin at the cold end by the end of the experiment. The heater/support temperatures as recorded by the controller are shown if fig. 7 as a function of time. Since paraffin melts at 52 C the temperature at the solidliquid boundary is 52 C; the temperature difference across the liquid length is therefore just the heater temperature

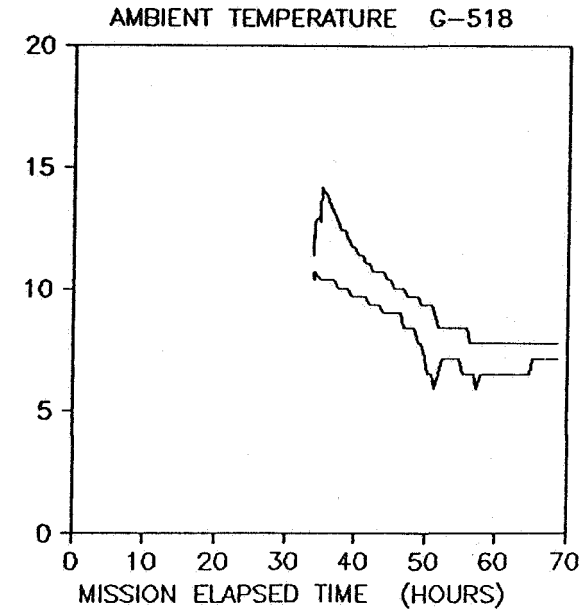

Fig. 5 Ambient temperature
top line - center of experiment
bottom line - outer wall of experiment

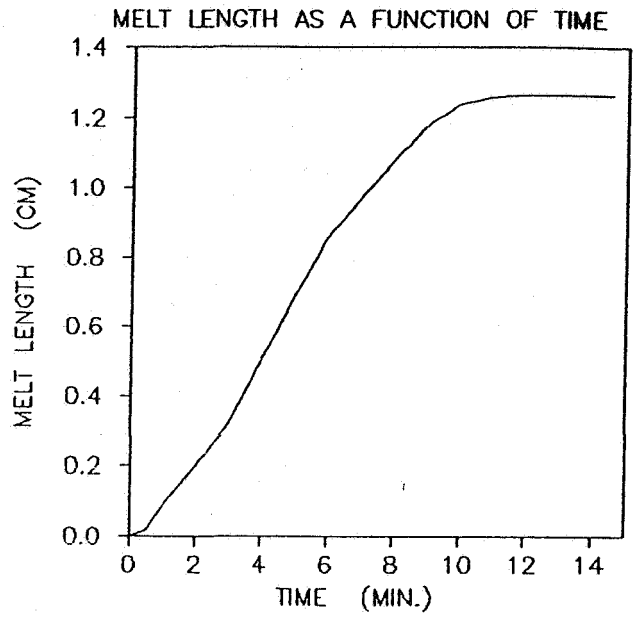

Fig. 6 Melt length as a function of time

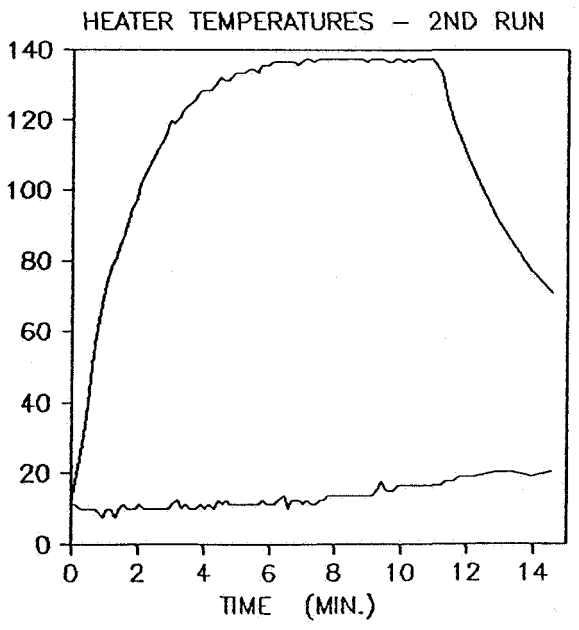

Fig. 7 Heater temperature as a function of time

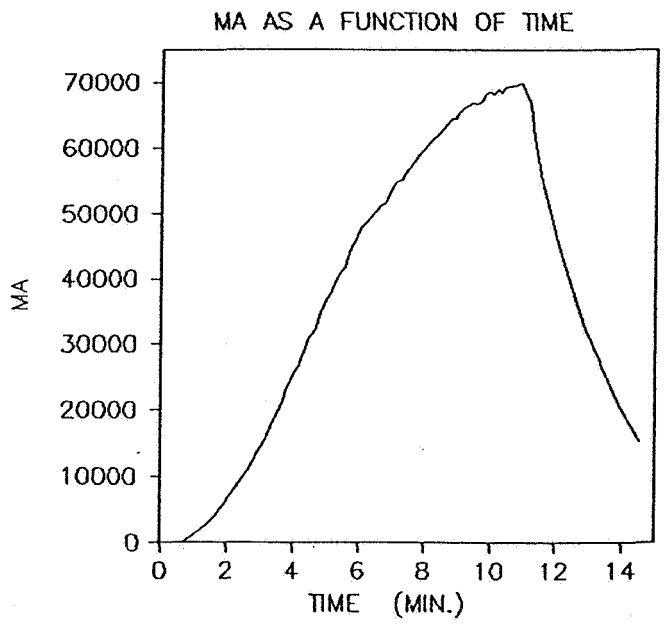

Fig. 8 Marangoni number as a function of time

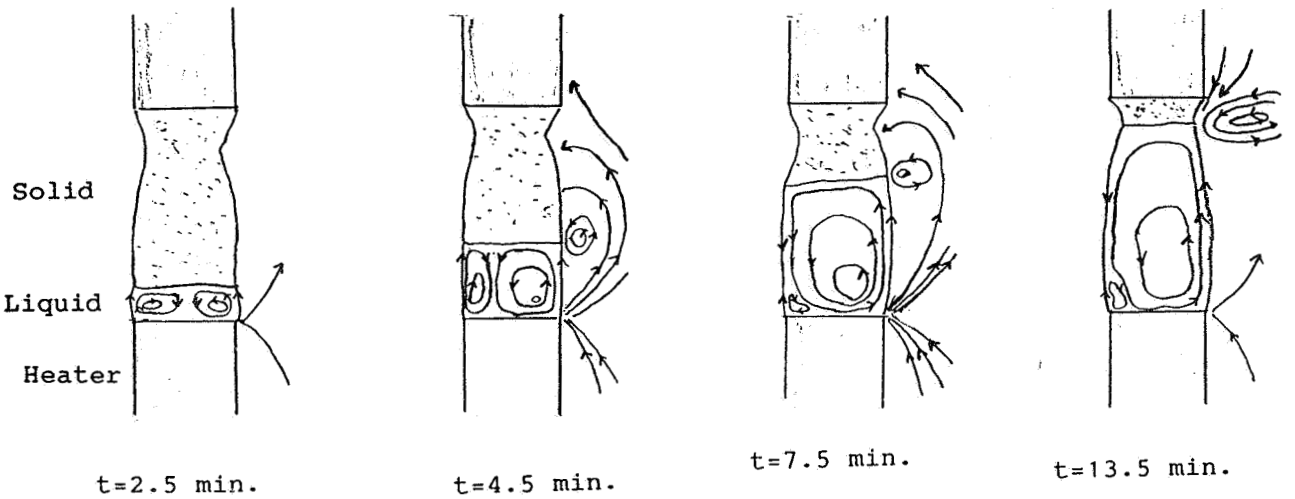

Fig. 9 Schematic of velocity field

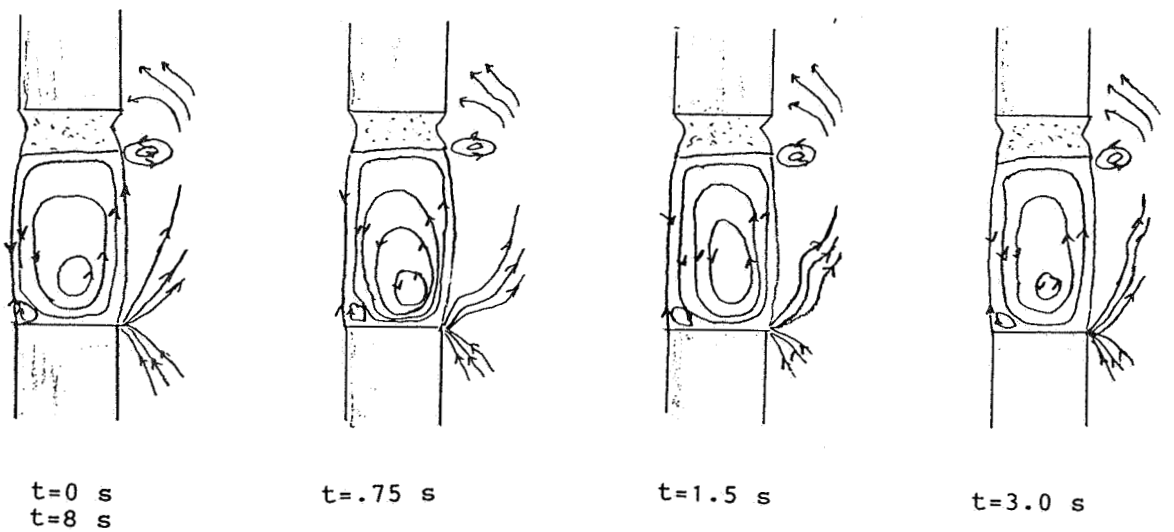

Fig. 10 Planform of oscillations

- 52 C. The temperature differnce and liquid length determine the Marangoni number, Ma, which is shown in fig. 8 as a function of time.

The thermistor attached to heater #2 was secured in place before flight with a nylon string. When the heater was activated the nylon melted and produced smoke. This smoke serendipitiously acted as tracer particles for convection which unexpectedly occured in the gas to one side of the liquid column.

A schematic of the velocity field as extracted from the film is shown in fig. 9 for four different times. At about 2 min. there is noticable convection in the gas to the right of the liquid bridge. The flow moves in from below and right and meets the heaterliquid interface exactly and moves back out away from the liquid. A small vortex also exists at the paraffin solid-liquid interface, rotating in a counter clockwise direction; this vortex tracks the solidliqiud interface as it advances. The basic character of the flow in the air remains unchanged throughout the experiment but becomes more intense with time. No flow in the air to the left of the liquid is ever observed. Up to about 2.5 min. the flow within the liquid melt is axisymmetric and as expected for thermocapillary flow, a single symmetric roll with the surface moving towards the cold end. After about 2.5 min. though the longitudinal axis of the roll begins to move to the left until at about 6.5 min. the flow is a lopsided cell with its axis of rotation at the lower right and with a very small return cell at the lower left. This lopsided cell persists for the remainder of the experiment. After the heater is turned off at 13 min. the flow in the liquid and the flow in the gas near the heater subsided fairly quickly, the vortex in the air near the solidliquid interface, which had grown quite large by this time, persisted until at least 14.5 min.

Until 4.75 min. the convection in the liquid and gas was laminar and slowly changing as the liquid bridge grew in length. At 4.75 min., corresponding to a Marangoni number of Ma=34000, oscillations (pulsations) occured in the velocity fields of the liquid and gas simultaneously . The period of the oscillations was about T=8 seconds. The oscllations are represented in fig. 10. They occur as a short pulse in the liquid with a wave that travels outward in the gas, followed by a long period of nearly laminar flow in both the liquid and the gas.

b Velocities measured for the flows at 10 min. were as follows; in the liquid at the lower right about 1mm from the surface, .28 cm/s; in the gas at the lower right about 1mm from the surface, .47 cm/s; in the gas in the vortex near the solid-liquid interface about 1mm from surface, .095 cm/s.

Discussion

There are three major results which are suprising and unexpected, the convection in the gas, the lopsided nature of the thermocapillary flow, and the odd (as compared to 1-g) oscillations which occur for Ma > 34000. All these are probably related.

First consider the convection in the gas. Continuity implies that for a velocity boundary condition which is large for

a short distance and small elsewhere along a surface (driving force in a small region) fluid flow will move from large distances into the driving region and back out as shown in fig. 11. Since the flow in the air is of this nature and meets the liquid-heater interface exactly it is certainly being driven by something in this region. An analysis of the region near the heater-liquid interface indicates that strong thermal and velocity gradients exist along the liquid surface. First consider the thermal transport from heater to liquid. The liquid velocity must be zero at the heater wall. This implies that at the wall only conduction can take heat from the heater. For near steady conditions this implies that the ratio of temperature gradient in the liquid to that in the heater will be equal to the ratio of thermal conductivities, about 1000 ! The temperature gradient will be very strong in the liquid near the wall and drop off rapidly due to convective heat transport. This of course causes a strong surface tension gradient which implies the velocity will be very high some short distance from the wall (fig. 12). The sharp boundary layers have been noticed previously in numerical simulations (ref. 11).

Given the existance of these sharp boundary layers at the driving region (liquid-heater interface) the gaseous convection must be caused by one or both of these boundary layers. The vortex in the gas would then be caused by similiar boundary layers at the solid-liquid interface. The problem is then to identify what type of convection is making use of the boundary layers provided by thermocapillary flow and driving convection in the gas.

Preliminary analysis of the convection in the gas has been completed (ref. 9) and will be presented elsewhere. The most promising driving forces are coupled thermocapillary / thermal expansion convection and microgravity bouyancy convection. Coupled thermocapillary / thermal expansion convection would occur in the following way; a small amount of gas is pulled into the liquid-heater interface by thermocapillary flow as in fig. 12 , the gas is heated very quickly and expands driving it outward. A simple 1-dimensional analytical solution has been obtained of the compressible Navier-Stokes equations for this model and a small flow is possible. This type on convection can not explain the vortex at the solid-liquid interface.

More promising is micorgravity bouyancy convection which occurs as follows; a small residual gravity field exists and points approxiamately to the left and down in fig. 9. Gas near the thermal boundary layers is heated and "rises" to the right and up. The flow pattern observed in the air fits this explanation qualitatively, in addition an analysis of a gas "falling" through the thermal boundary layers expected with a g = observed in the experiment. The geometric stability of the liquid bridge (ref.) implies g < .009 g earth; the centripetal acceleration about the Shuttle center of mass is probably at least g = .0001 g earth. So the limits on the g environment are consistent with the g implied by the order of magnitude analysis.

The lopsided nature of the flows is easily explained if there is a residual g pointing to the left and down. The flow in the liquid would "rise" to the right and a lopsided cell of the

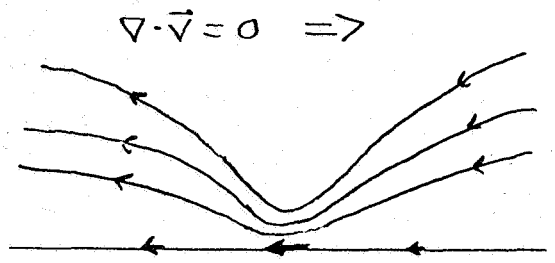

Fig. 11 Continuity effect on confined driving force

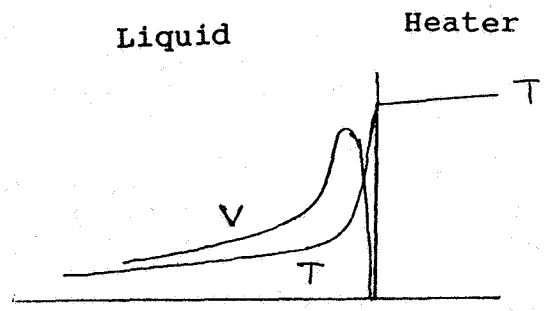

Fig. 12 Thermal and velocity boundary layers at the heater-liquid interface

type observed would form. In addition flow in the air would only be expected on the "high " side (right side of the cylinder). The lopsided flow patterns could also be explained if smoke was only introduced on the right side and if the smoke seriously affected the surface tension. The surface tension gradient would then be non-axi-symmetric and the observed flows could arise.

The peculiar oscillations which occured could simply be do the influence of the convection in the gas which was apparently strongly coupled to the thermocapillary flow. The Shuttle was in an Earth viewing attitude during the experiment and vernier thrusters may have been in use in a pulsed mode. If the gaseous convection was driven by microgravity the the short pulses from the thrusters may have caused the oscillations. The thruster and/or pulse period have not been defined.

Further analysis of the convection in the gas is being pursued and a 2-dimensional numerical model is being developed in which effects can be added or subtracted so as to pin point the cause of the gaseous convection. A reflight is also planned to further investigate these phenomena and to see how repeatable the results are.

Conclusions

Thermocapillary flow and gaseous convection in microgravity have been observed and investigated. An oscillatory instablity at Ma=34000 was observed in both flows. The oscillations were strongly coupled. The gaseous convection could be driven by microgravity convection or coupled thermocapillary flow and thermal expansion convection. The gaseous convection had a strong influence on the thermocapillary flow and warrants further investigation.

☆U.S. GOVERNMENT PRINTING OFFICE: 1986-625-014:40003