IN-44

5105-165
Solar Thermal Power Systems Project

DOE/JPL-1060-96
Distribution Category UC-62

36 pages

(NASA-CR-177155) SOLAR STIRLING RECEIVER ALTERNATIVES FOR THE TERRESTRIAL SOLAR APPLICATION (Jet Propulsion Lab.) 36 p
HC A03/MF A01 CSCL 10A
N86-28512
Unclas
G3/44 43402

Solar Stirling Receiver Alternatives for the Terrestrial Solar Application

J. Stearns

April 30, 1986

Prepared for
U.S. Department of Energy
Through an Agreement with
National Aeronautics and Space Administration
by
Jet Propulsion Laboratory
California Institute of Technology
Pasadena, California

JPL Publication 86-13

5105-165
Solar Thermal Power Systems Project

DOE/JPL-1060-96
Distribution Category UC-62

Solar Stirling Receiver Alternatives for the Terrestrial Solar Application

J. Stearns

April 30, 1986

Prepared for
U.S. Department of Energy
Through an Agreement with
National Aeronautics and Space Administration
by
Jet Propulsion Laboratory
California Institute of Technology
Pasadena, California

JPL Publication 86-13

Prepared by the Jet Propulsion Laboratory, California Institute of Technology, for the U.S. Department of Energy through an agreement with the National Aeronautics and Space Administration (NASA Task RE-152, Amendment 404; DOE/SNLA/NASA Interagency Agreement P.O. 25-7651).

The JPL Solar Thermal Power Systems Project is sponsored by the U.S. Department of Energy and is part of the Solar Thermal Program to develop low-cost solar thermal and electric power plants.

ABSTRACT

Concept studies have been completed for four dish-Stirling receivers: the solar only and thermal storage receiver, each of which is either directly coupled or indirectly (heat pipe) coupled to the Stirling engine. The results of these studies are to be applied to systems benefit/cost analysis to determine the most desirable development approach.

CONTENTS

APPENDIXES

Figures

Tables

SECTION I

INTRODUCTION

Previous studies at Sandia National Laboratories, Livermore, CA, have been aimed at optimization of energy storage and hybrid fossil fuel energy (Reference 1) for solar thermal electric generation. This is considered important to the economical treatment of daily-, seasonal- and weather-induced variations in solar availability.

There are several different modes of operation for the solar thermal electric plant. Primarily, these are (1) stand-alone, (2) cogeneration or load apportionment, and (3) storage alone. The first two of these include operation into baseload, intermediate and/or peaking loads. The storage mode more specifically supports a peaking load requirement. The modern complexities of electric utility generating system operation with multiple generating units, together with the low cost of currently-available off-peak energy, make exceptionally difficult the task of defining the solar generation need. For this reason, solar power conversion development will probably require the maximum spread of technology options.

Further study has now been completed, evaluating alternative solar receiver concepts for dish-Stirling power conversion subsystems. Two primary types of receivers are defined: solar only and thermal energy storage (TES) receivers. Each of these may be either directly coupled to the Stirling cycle engine or indirectly coupled (through heat pipes). Finally, a fossil fuel combustor may also be added to the solar receiver to provide alternate energy backup. The technologies required for these receiver alternatives have, for the most part, been found to be available. Preliminary experiments are in progress, and production price expectations have been estimated. Further refinement and detail may be expected as specific subsystem designs are completed in the future.
At present, a number of best-guess assumptions have been made concerning definition of the dish-Stirling system. These are sketched in Appendix A. The solar receiver concepts are evaluated, based on their compatibility with the system as defined.

SECTION II

RECEIVER TECHNOLOGY DEVELOPMENT

Except for the direct-coupled solar only receiver, built by United Stirling AB in Sweden (Figure 1), receiver technology has only advanced as far as conceptual design. However, experimental evaluations of heat pipes, thermal energy storage (TES) and combustors are nearly complete enough to warrant continuing into detailed design of alternative receivers at this time.

A. DIRECT-COUPLED SOLAR ONLY RECEIVER

As noted, the direct-coupled solar only receiver has been built and tested by United Stirling AB, Sweden, in several experimental versions. Heater head materials and durability have also been evaluated in the Automotive Stirling Engine program (Reference 2), and costed for that application. Depending on materials used, heater head cost (less regenerators) for approximately 10,000 units will be between \$600 and \$1200 per engine. At 25kWe peak output, this amounts to \$24 to \$48 per kWe peak. The heater head is usually charged to engine cost rather than receiver cost. Pricing for the PCU is shown in Figure 2 (Reference 3). Receiver cost only includes insulation, shell, structure and aperture, which, in quantities of 10,000 units, will price out at roughly \$15 per kWe peak. For the solar application, however, directly coupling the heater head to the receiver will require the engine to operate in an inverted position. The oil lubrication system is, therefore, modified to operate dry sump.

The direct-coupled heat exchanger tubes are manifolded at the cylinder head and laid out in a convoluted, conical array with interlocking quadrants, shown in Figure 3. There are two regenerator housings for each cylinder head. This configuration of heater head introduces a number of significant requirements and constraints on the system design.

A very high (60 W/cm^2), very uniform heat flux is required at the surface of the heat exchanger tubes and between the four heater head quadrants. It is accomplished by special alignment of each facet or segment in the solar concentrator, and must include special compensation and averaging for structural deflections during tracking. The heater tubes represent dead volume, and hence cycle losses, to the Stirling engine. At the same time, receiver temperature limits are defined by materials (creep and fatigue strength), and thus any temperature variation represents a mean temperature reduction and system efficiency loss. As rim angle on the concentrator is increased, temperature uniformity becomes more difficult to obtain inside the receiver cavity. A maximum rim angle of approximately 45 degrees ($f/D = 0.6$) appears consistent with present design complexity. Heater head temperature is maintained below 720°C to obtain reasonable life for the solar application. Temperature differentials between quadrants will usually be maintained within 50-70°C.

The use of heat exchanger tubes inside the receiver cavity requires very careful receiver design to avoid convective losses. First, the receiver cavity must be completely sealed except for the aperture opening. Next, there

PRECEDING PAGE BLANK NOT FILMED

PAGE 2 INTENTIONALLY BLANK

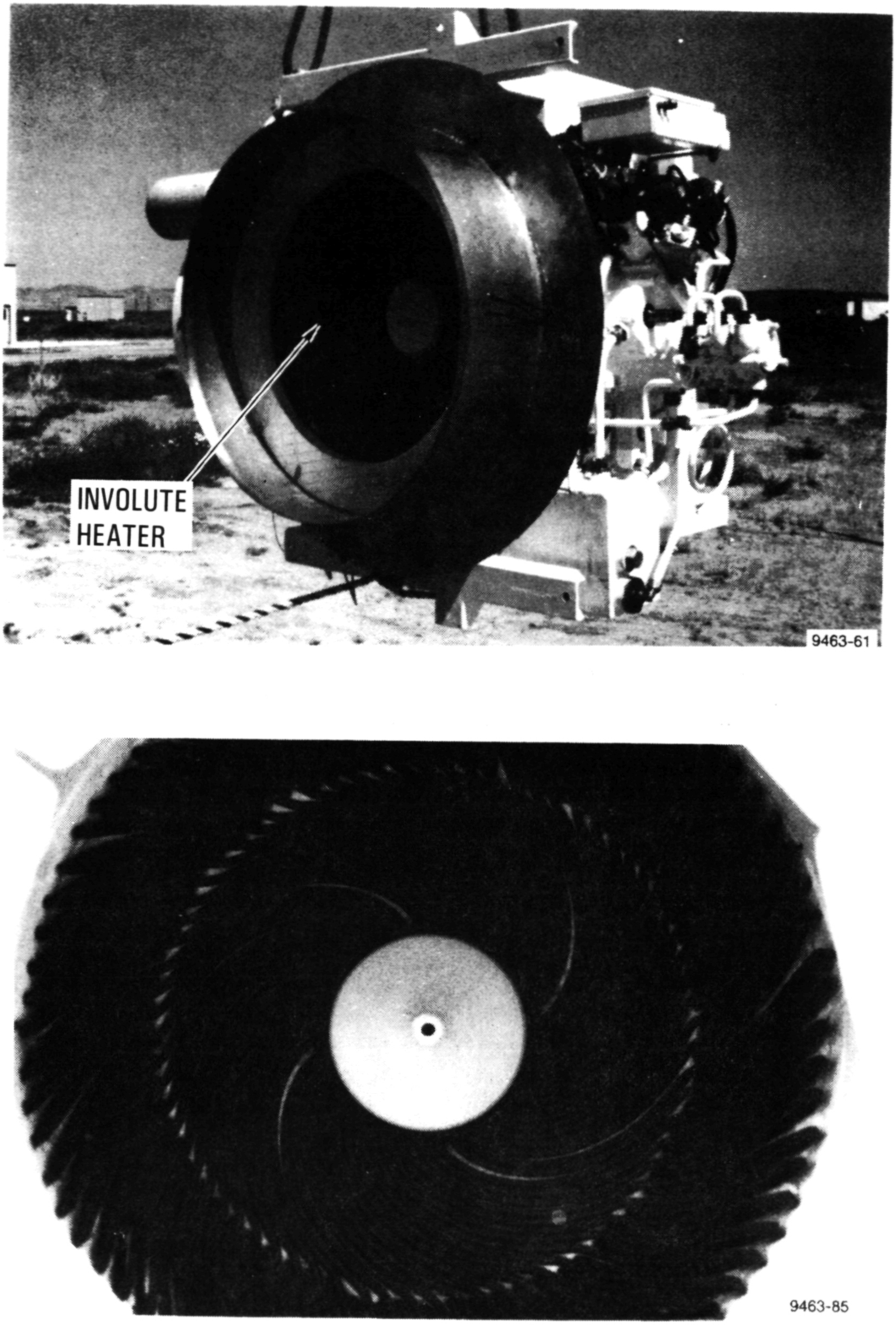

Figure 1. Involute Heater for the Vanguard Receiver

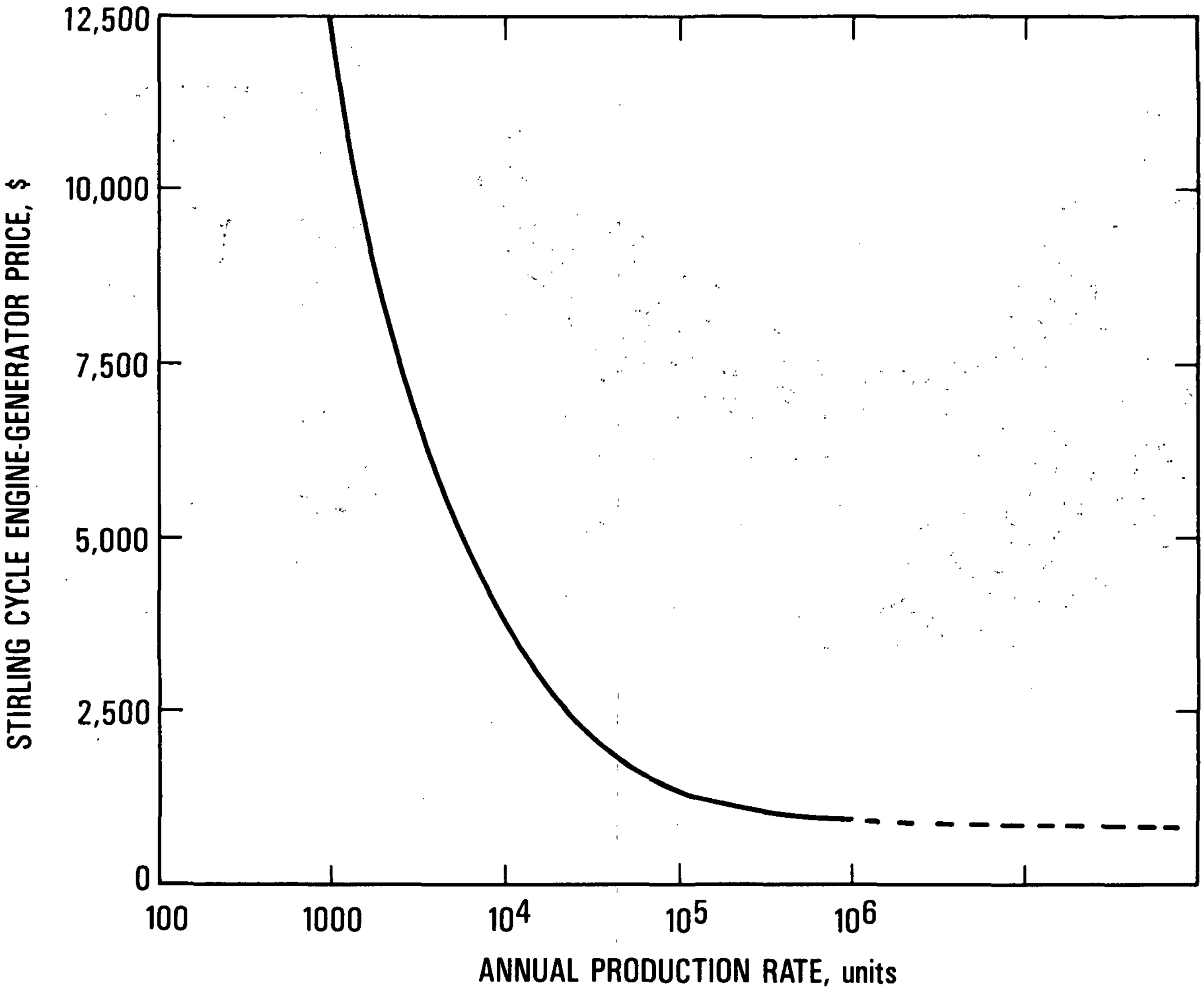

Figure 2. Stirling Cycle Power Conversion Price Estimates

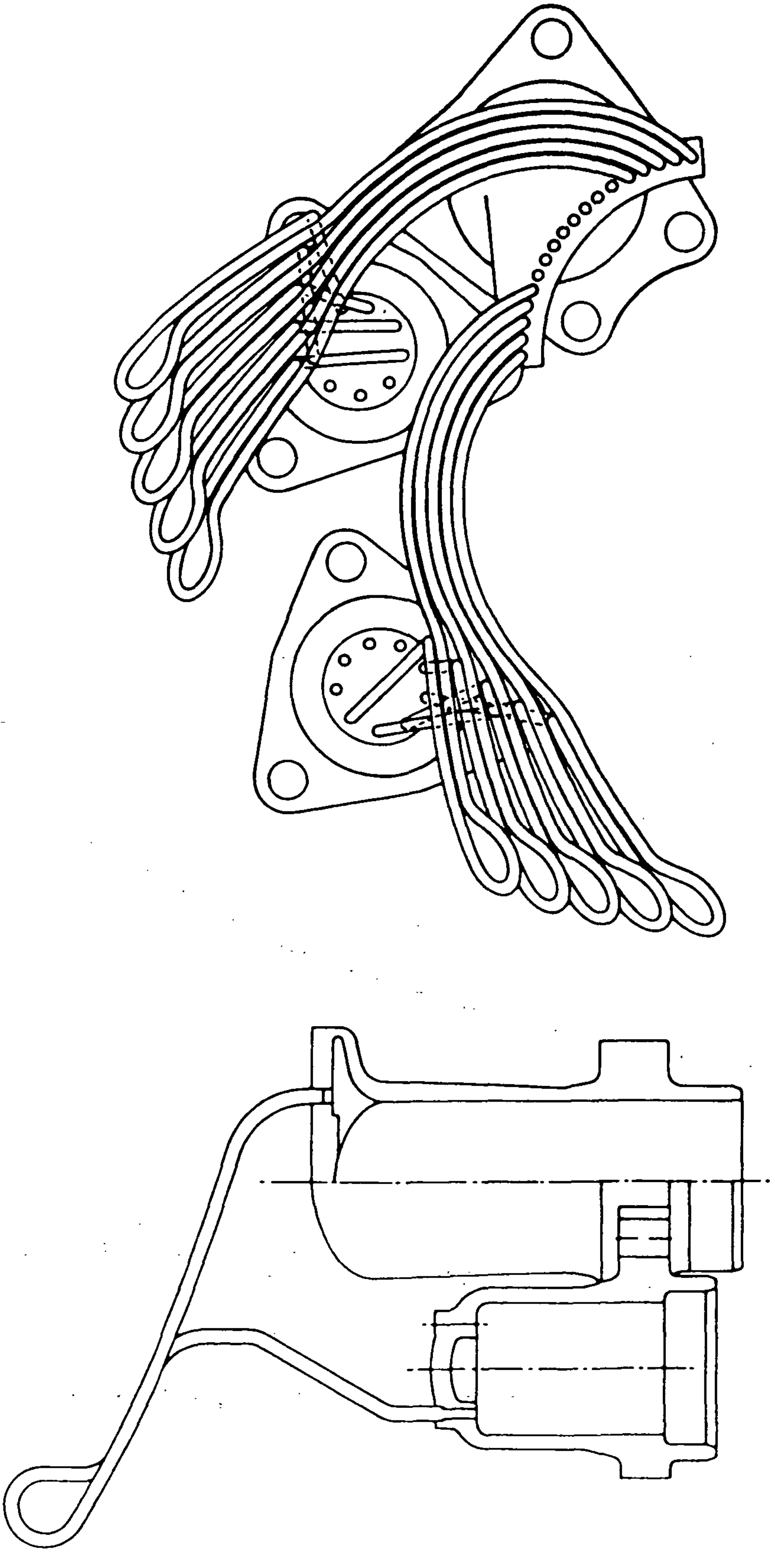

Figure 3. Vanguard Project Heater Design

must also be no open space around or behind the heater tubes where convection currents could develop. Finally, to further reduce convection and conduction losses, and to prevent possible overheating due to spurious solar flux misalignments, insulation is added internally to the receiver cavity.

The heat exchanger surfaces, being aligned as they are with the concentrator, have higher reflectivity losses than other receivers. Thus, the effective absorptivity of the receiver drops below the desired 0.98, down to 0.95 or less, according to measurements done at the Advanco Corp. test site at Rancho Mirage (Reference 3). There also appeared to be surface material flake-off, probably associated with thermal shock of startup and shutdown at the high incident solar flux levels.

Design and test was done early on by JPL and Fairchild Stratos Division to provide a hybrid natural gas combustor with the direct-coupled receiver (Reference 4). Although technical feasibility was demonstrated, a number of special problems were encountered that would require further receiver design and development in the future. Because of the dead volume constraints on the Stirling cycle heat exchanger, design of a hybrid combustor is also very tightly constrained. Convective heat transfer studies were done (Reference 5) to optimize tube spacing and the combustor configuration.

The combustor must also operate at a pressure slightly above atmospheric. Thus, the combustor, with its heat exchanger tubes, must be carefully sealed, not only because of efficiency losses but also because serious hot spots can develop to cause degradation and failure of the heat exchanger. The combination of a sealed, fully recuperated combustor, an open cavity receiver and a tightly constrained Stirling cycle heat exchanger leads to an exceptionally complex design problem.

A further combustor complication is the solar only plus hybrid design problem that is associated with the variable solar input caused by variations in weather and atmospheric conditions. High controllability and extremely large turndown ratios are needed on the combustor. Maintaining stoichiometric burning at high efficiency over a wide power range and large preheater temperature excursions, while maintaining safety and integrity of fuel lines on a two-axis tracking concentrator, is a major engineering challenge. If the further requirement for low cost is added, the desirability of the hybrid approach is highly questionable.

In Summary, the direct-coupled solar only receiver has been developed and is operational at this time. Provided that the specific system constraints imposed by this receiver are met, the receiver has high performance at low cost. The economic desirability of adding a hybrid combustor to the receiver has not been shown.

B. INDIRECT-COUPLED SOLAR ONLY RECEIVER

The indirect-coupled solar only receiver operates with a heat-pipe heat transport from the receiver to the Stirling engine. One example of this approach, using the Stirling Thermal Motors, Inc. (STM) variable swashplate engine, is as shown in Figure 4. Because of high boiling and condensing heat transfer with the sodium working fluid, the heat transfer surface area of the heat pipes and engine heat exchangers is minimal. In addition, the receiver and engine heater heads operate at almost constant, uniform temperature. The wicking and the manifolding in this receiver add significantly to the receiver cost, compared to the direct-coupled receiver; however, this is at least partially offset by smaller and simpler heat exchangers at the Stirling engine. Furthermore, as seen in Figure 4, the Stirling engine can be operated in a normal position with respect to gravity rather than inverted, so that no modification is necessary to a standard engine design. The receiver shown is able to operate with a 50-kWe PCU. A receiver delivered price of $15 to $20 per kWe is expected in quantities of 10,000 units. If designed for only 25 kWe, of course, the per kWe price would be higher. It should further be noted that, in the design of the variable swashplate Stirling engine, STM has developed a reliable, low-cost heat pipe connector. Thus, assembly between receiver and engine is easily accommodated in production. STM has also developed wicking techniques that eliminate the need for spot welding.

The indirect-coupled receiver introduces a cylindrical cavity heat exchanger that operates at a uniform temperature throughout, irrespective of poor solar flux distributions. Thus, rim angle (at the receiver measure from the axis) of the concentrator need no longer be limited to 45 degrees, specialized alignment of facets or segments can be eliminated, and deflections in the concentrator have minimum impact on collector performance. Hot spots do not occur in the receiver and highest efficiency consistent with temperature of operation is expected.

The large-diameter annulus of the heat pipe receiver leads to questions of durability with low cycle fatigue. Total elastic and plastic strain range over which the stainless steel material must cycle to produce failure in 10^4-10^5 cycles is approximately 0.002 inches/inch. A design analysis will be needed, taking into account the pronounced plastic deformation which occurs at the high pseudostresses under low cycle fatigue. For some modes of solar operation, the solar only receiver may undergo several complete thermal cycles in one day.

Addition of a hybrid combustor to the heat pipe receiver is relatively straightforward. Required heat flux is of the order of 75 W/cm^2 at a temperature of 800°C. A jet impingement combustor wrapped around the cylindrical receiver will perform this function at a heat exchange coefficient of 700 to 800 W/m^2-°C ($\lesssim$3000°F). Combustor efficiency up to 90 percent or above is achievable, depending on design of the air preheater. Control requirements, however, may be quite complex, as was noted for the direct-coupled solar only receiver of the previous section.

In Summary, the indirect-coupled solar only receiver is based on available heat pipe technology. System design constraints have been relaxed compared to the direct-coupled receiver, with probable result of an overall system cost reduction. Primary concerns presently are low cycle fatigue and also the complexity of hybrid combustor controls, if added.

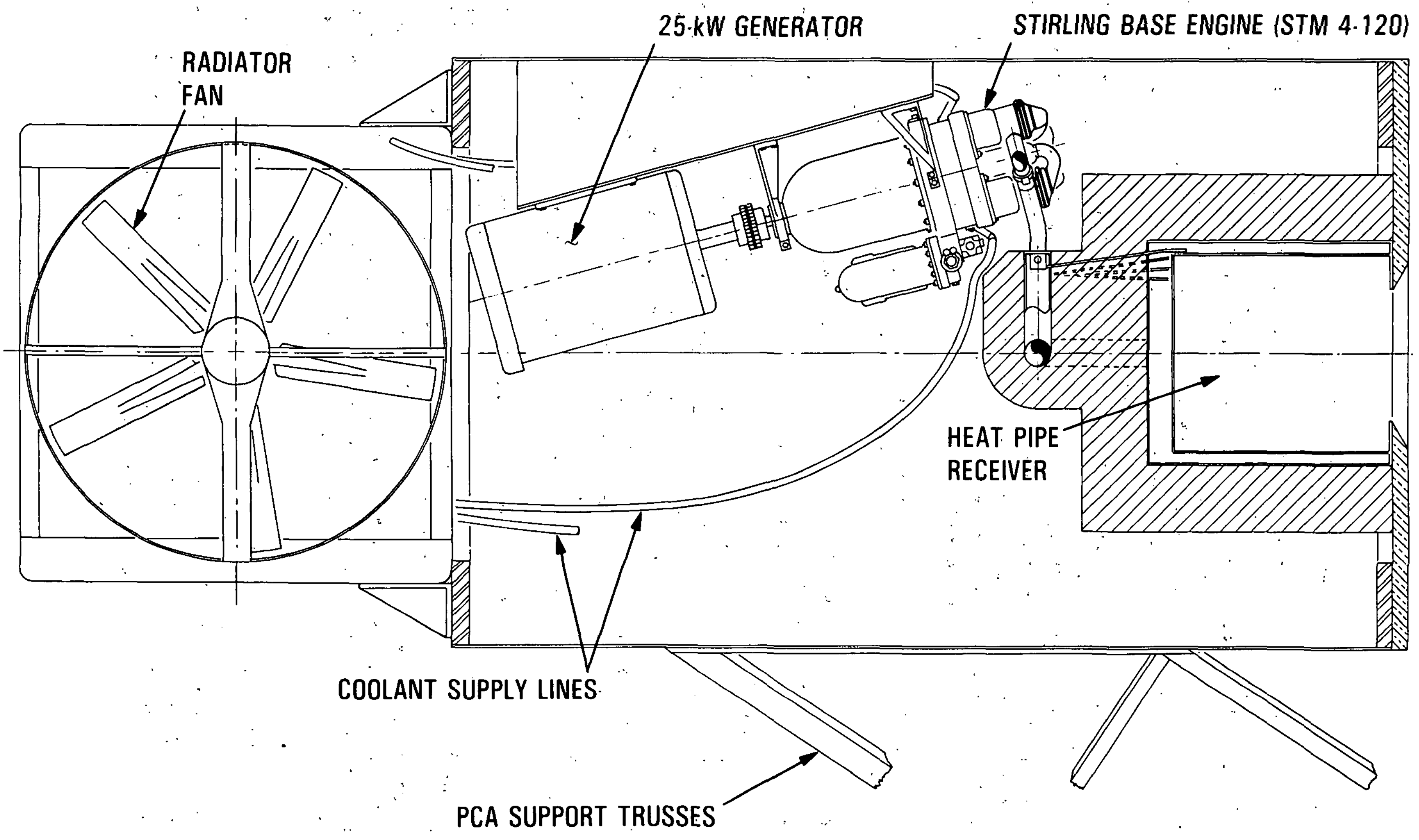

Figure 4. Indirectly-Coupled Solar Only Receiver and Stirling Power Conversion

C. INDIRECT-COUPLED THERMAL STORAGE RECEIVER

Thermal energy storage (TES) applicable to the dish-Stirling receiver has been in development for over 10 years within the aerospace industry (Reference 6). Studies performed by GE for the dish-Stirling receiver (Reference 7) in 1978-1980 resulted in the selection of latent heat of fusion salts over the sensible heat systems from both a performance and cost viewpoint. Simultaneously, a new concept of an alkali metal-alkali salt slurry was evaluated for feasibility at JPL, including cyclic testing of certain materials systems up to 6000 h (References 8, 9). A small calorimetry experiment was further performed in 1985, proving, in part, the high performance potential of the Na/NaF-MgF_2 slurry system in stainless steel at 800°C for the solar-Stirling application. Additional experimentation is needed to assure cyclic stability of the TES system when both the heat input and heat output are collocated within the salt slurry. However, even if those experiments were to perform poorly, separation of input and output elements could be accommodated for the terrestrial application.

The TES receiver concept is shown in Figure 5. Typical problems of thermal transport, corrosion of containment materials, thermal ratcheting, etc., can be virtually eliminated by the quasi-heat pipe action of the slurry system. Resultant simplification of the receiver/TES combustor system is significant. The heat receiver is an insulated annulus, containing the Na/NaF-MgF_2 slurry. The slurry operates at a fixed latent heat temperature ($T \pm 15°C$), determined by the crystallization temperature of the molten salt (salt-rich phase). On the underside of the receiver is a flame-impingement natural gas combustor and heat recuperator, which is operated during periods of cloud cover or darkness. Output from the TES may be either direct or indirect. Because of the significant non-recoverable heat required to raise the receiver temperature to a nominal 800°C, the receiver should be brought up to operating temperature and kept at that temperature on a 24-hour-day basis. Temperature need only be brought down for maintenance and overhaul. During periods of solar power off, an insulated aperture cover is provided to minimize radiation heat losses.

As with the heat pipe receiver, the TES receiver provides a cylindrical cavity heat exhanger that operates at a uniform temperature, irrespective of non-uniform input flux. Concentrator rim angle is not limited to 45 degrees, specialized concentrator alignment is not required, and deflections of the concentrator have minimum impact on the collector performance. Low cycle fatigue is no longer a consideration because the receiver is maintained at its operating temperature rather than being thermally cycled. The addition of the TES allows simple on-off control of the combustor, while preheater temperature variations are minimal.

Sizing the receiver is dependent on the amount of TES required. Maintaining temperature around the clock puts greater emphasis on high-quality insulation. Conduction heat losses are assumed, therefore, to be approximately 270 W/m^2. Breakout of receiver mass and cost is shown in Table 1 for the three different sizes of TES. In production, the TES receiver price (10^4 units) is expected to be approximately \$6 to \$10 per kWht, while combustor price is conservatively estimated at \$10 per kWt.

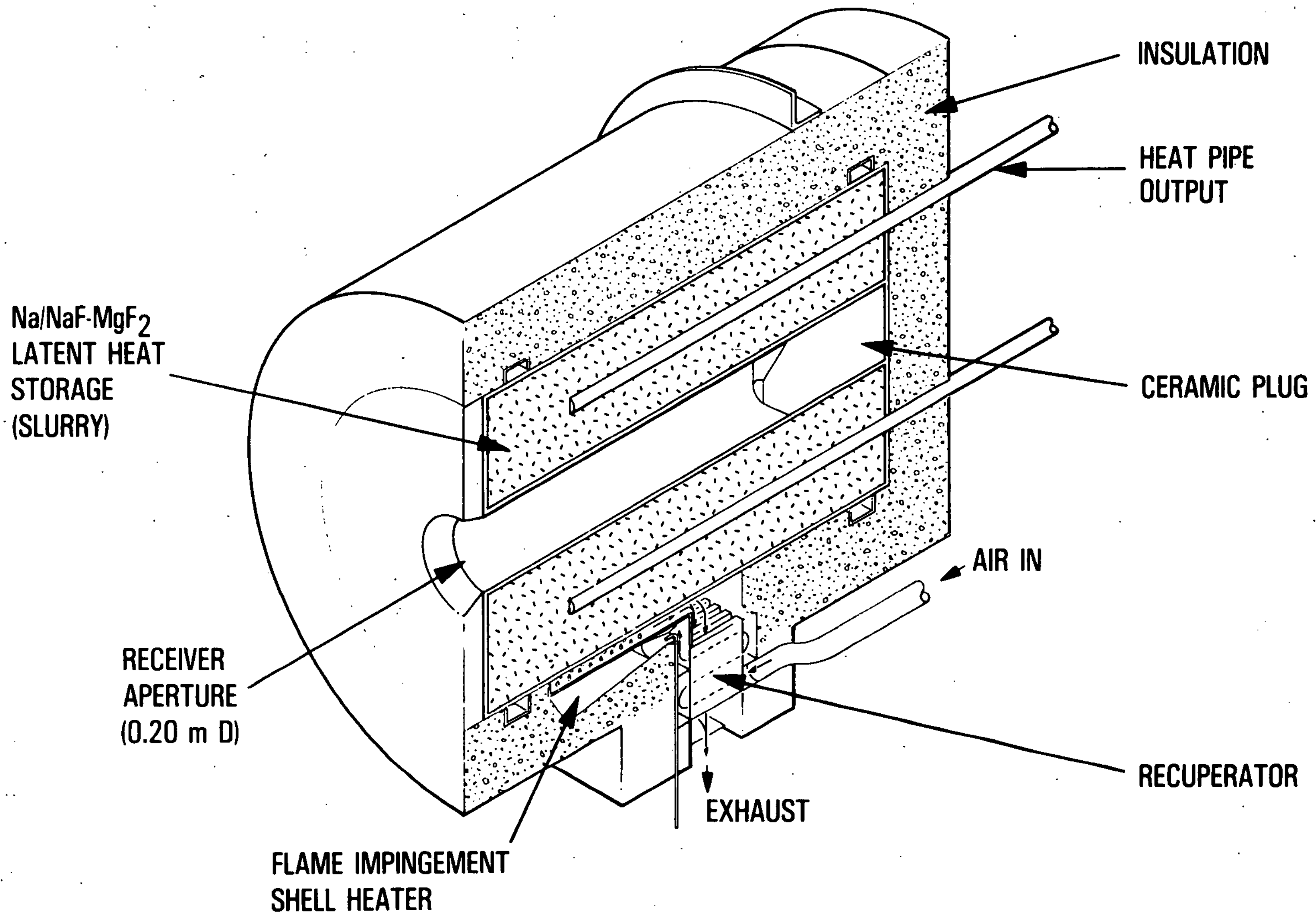

Figure 5. Heat Pipe Solar Receiver (Hybrid with TES)

At approximately 800°C, the Na/NaF-MgF_2 materials system is an excellent temperature match to the Stirling engine. Preliminary calorimetry testing has been performed as shown in Figure 6. Initial test results are plotted in Figures 7 and 8, showing heat pipe output temperature during rapid discharge of the salt slurry. Estimates made by General Electric Company of quantity production of NaF-MgF_2 eutectic (Reference 10) show a price of approximately $0.40/kg. Heat density is approximately 1739 MJ/m^3.

Table 1. Slurry/TES Receiver Estimates for Na/NaF-MgF_2 Materials System

kWht	100	200	300
Salt Mass (kg)	555	1110	1665
Salt Price ($)	222	444	666
Container Mass (kg)	58	89	119
Container Price ($)	290	445	595
Insulation Mass (kg)	121	171	217
Insulation Price ($)	368	528	680
Structure/Misc. Mass (kg)	83	166	250
Structure/Misc. Price ($)	250	500	750
Subtotal Mass (kg)	817	1537	2251
Price ($)	1130	1917	2691
$/kWht	11.3	9.59	8.97
Efficiency (24 h)	87.5%	90%	91%

Containment material is 304 stainless steel at a mill-run price of $2.75 per kg, and a fabricated price of $5.00 per kg. Insulating material is in two parts: high-quality, high-temperature blanket, such as Kaowool®, is wrapped next to the receiver, and castable insulation is applied externally. Average insulation price is approximately $3.00/kg. Finally, the remainder of receiver components and structure are fabricated of mild steel, ceramic, etc., at an average delivered price of $3.00/kg.

The TES receiver concept of Figure 5 shows an indirect (heat pipe) coupling to the Stirling engine heater heads. This operation allows for the addition of a simple inert gas valve/switch in the interconnecting heat pipes

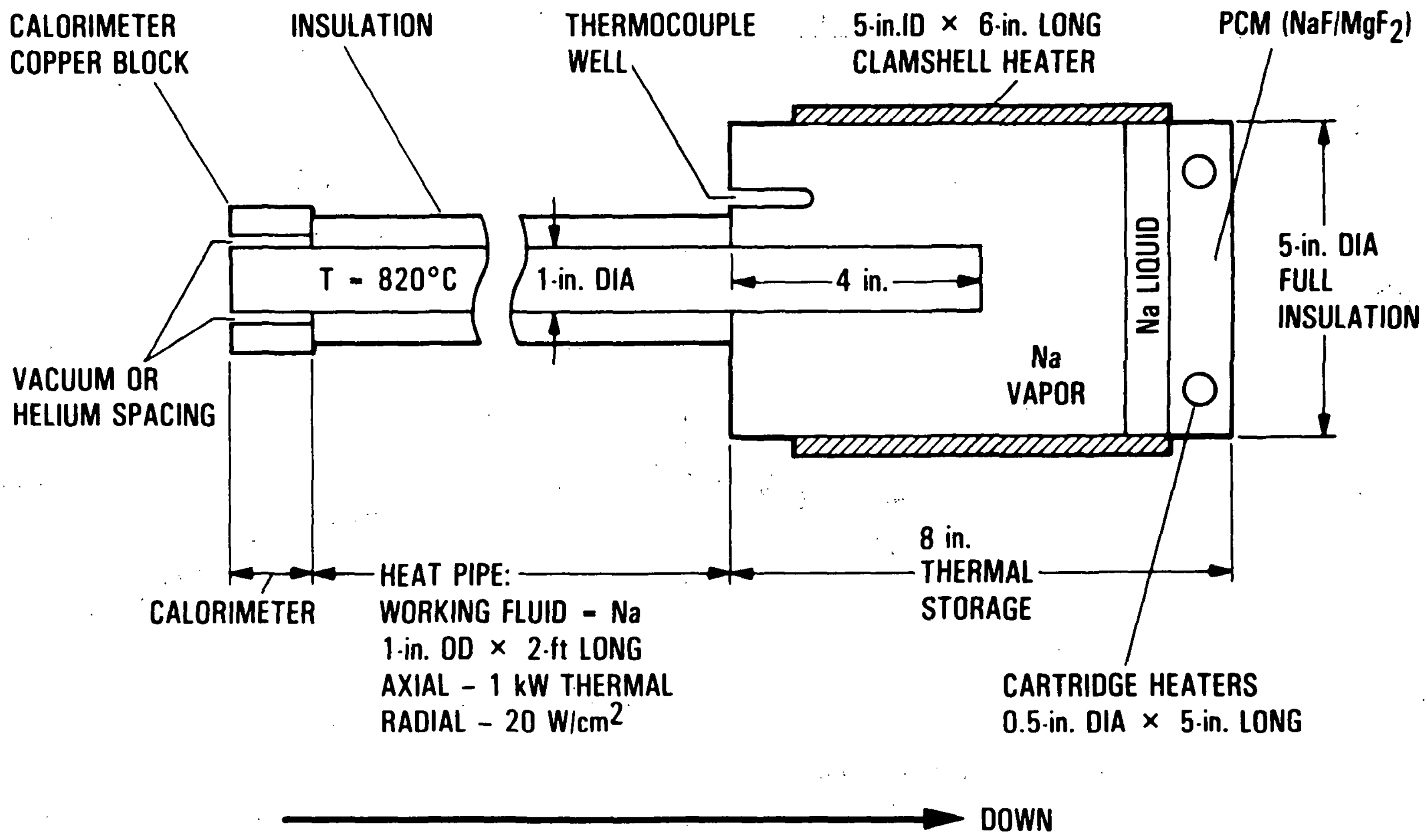

Figure 6. Experimental Setup (Planned) for Heat Transfer Rate Measurement

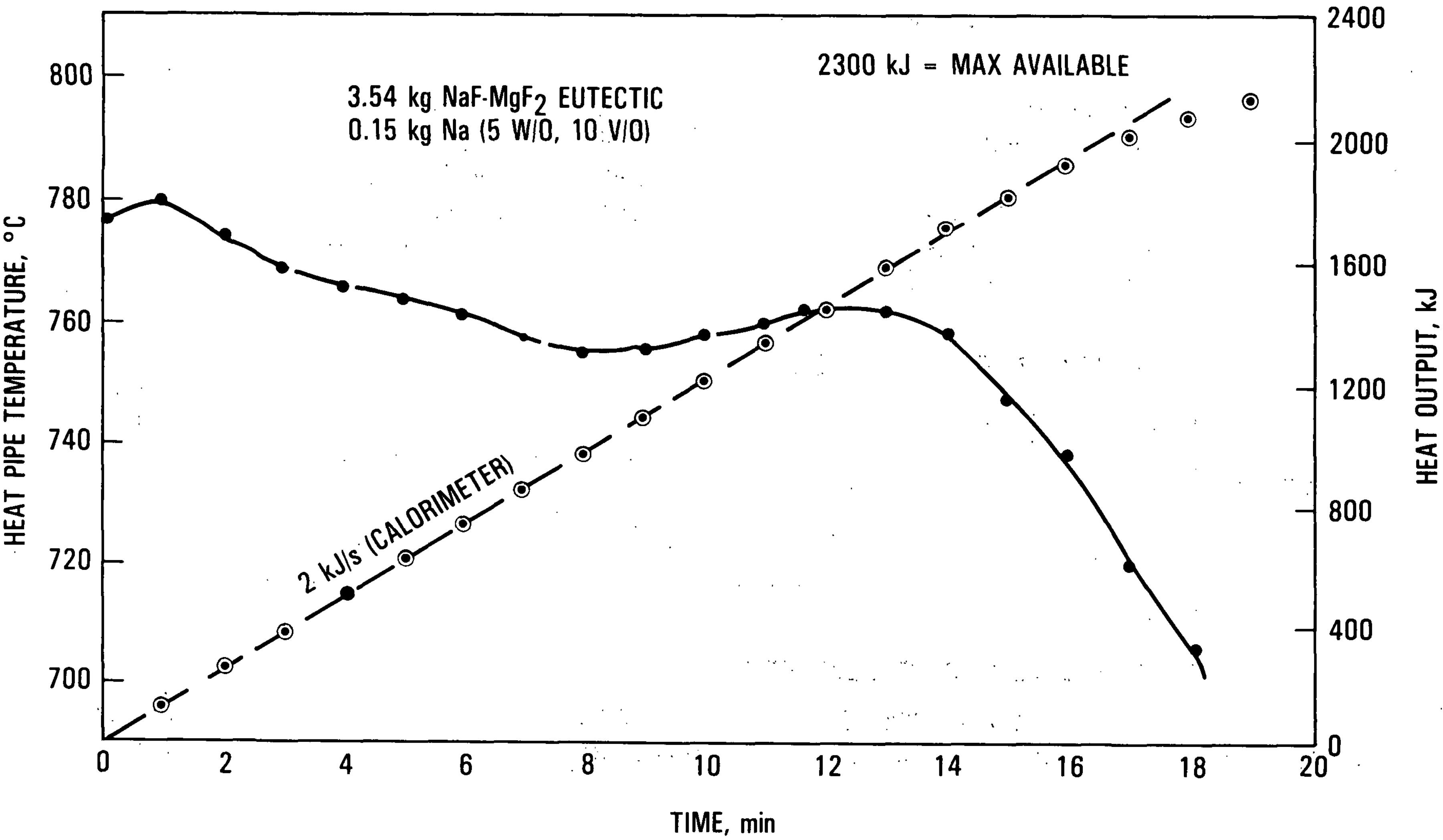

Figure 7. TES Slurry Discharge Performance (Run 1)

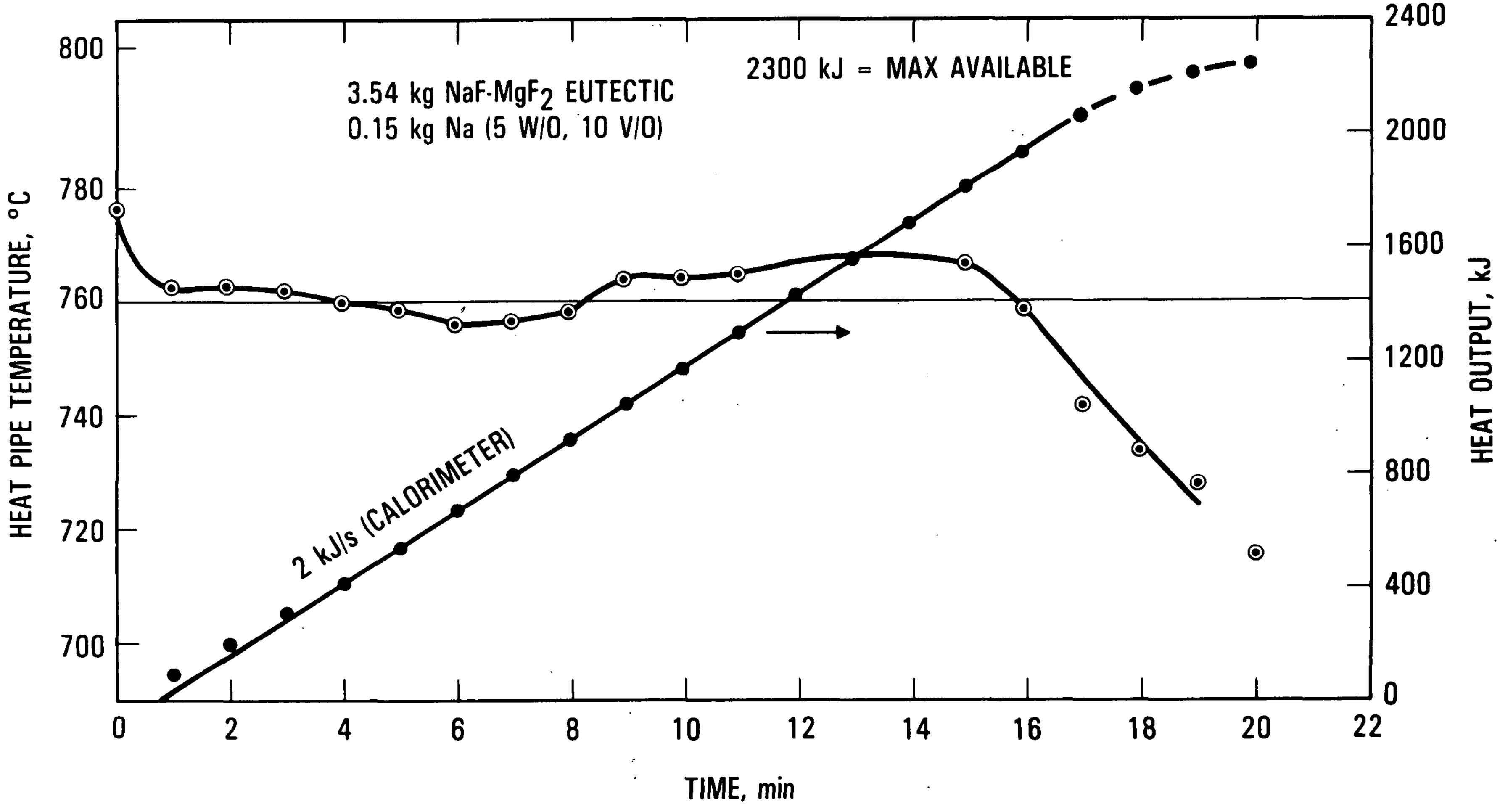

Figure 8. TES Slurry Discharge Performance (Run 2)

for engine on-off control. The Stirling engine is then operated as a standard engine in its normal position.

In Summary, the indirect-coupled TES receiver technology has been fully demonstrated and appears ready for application where high peformance, durability and low cost are needed. The hybrid combustor is utilized for backup and augmentation of solar energy and for maintaining a constant receiver temperature. The system provides exceptional versatility in meeting a wide range of electric utility energy and capacity needs.

D. DIRECT-COUPLED THERMAL STORAGE RECEIVER

The TES receiver, discussed in the previous section, is also used with direct coupling to the Stirling engine heater head. This concept was previously studied with the United Stirling engine and the General Electric Co. thermal storage receiver system, as shown in Figure 9 (Reference 7). It was found in that study that if the Stirling engine heater head is to be directly coupled to the TES receiver, some unique engineering problems will be introduced. Primarily, these problems stem from the fact that the heater head must be integrally sealed into the receiver. The heater will be redesigned and simplified for optimum performance with liquid/vapor heat transfer from the TES slurry. Thus, the receiver becomes an integral part of the Stirling engine. And because the heater head is now maintained at a constant high temperature, creep will increase and lifetime will be reduced proportionately. Also, a high-temperature insulating seal is needed between the hot heater heads and the cold engine block, while cold sink temperature must be continuously maintained in the block. Perhaps the most difficult task will be an engine modification to switch the engine on and off independently of heater temperature and to eliminate internal conduction losses in the cylinders and regenerators in the engine-off state.

In Summary, the direct-coupled TES receiver is not presently considered feasible because it requires full integration with the Stirling engine. Significant development of new technologies in the Stirling engine are therefore needed that have not yet been demonstrated.

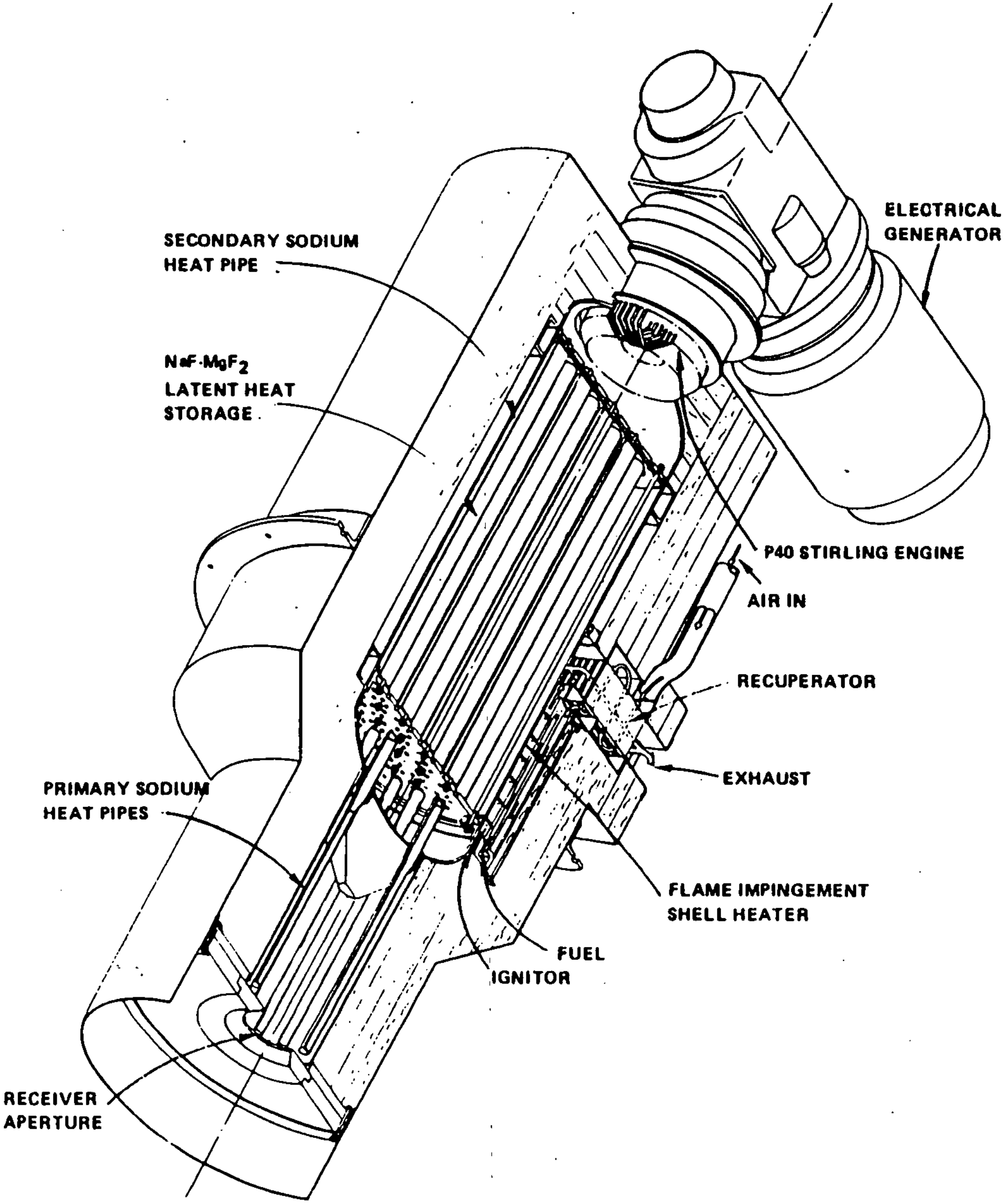

Figure 9. Dish Stirling Heat Pipe Solar Receiver (with TES)

SECTION III

CONCLUSIONS

- Several low-cost receiver technologies are now available for solar Stirling power conversion subsystems. Different system requirements and constraints are defined, depending on the receiver selected. Thus far, only the direct-coupled solar only receiver has been fully developed.
- Hybrid combustors and thermal energy storage can be provided with additional detailed design and development. These components, on a total system basis, add minimum additional cost and complexity if properly integrated.
- A benefit/cost risk analysis and technology enablement study should be completed to determine optimum receiver design for a range of electric utility power and energy cost profiles.
- The four primary receiver concepts that have been evaluated are summarized and compared in Table 2. In this tabulation it appears that the receiver with the most desirable characteristics is the indirect-coupled TES receiver.

Table 2. Primary Receiver Concepts

Receiver Type	Solar Only		Thermal Storage	
Stirling Engine Coupling	Direct	Indirect	Direct	Indirect
Configuration	Conical	Cylindrical	Cylindrical*	Cylindrical
Maximum Flux (W/cm^2)	60	40	40	40
Special Alignment	Yes	No	No	No
Insulation	Internal	External	External	External
Maximum Temperature(°C)	720	820	?	820
Temperature Differences (°C)	70	5	?	5
Thermal Shock/LCF	Yes	Yes	No	No
Receiver Wicks and Manifold	Yes	Yes	No	No
Volume Constraints	Yes	No	No	No
Engine Inverted	Yes	No	?	No
Engine Redesign	No	No	Yes	No
Rim Angle Limit 45°	Yes	No	No	No
Combustor Control	30:1 T.R.	30:1 T.R.	On/off	On/off

* Special engine heater redesign required.

SECTION IV

REFERENCES

1. Iannucci, J. J., and Eicker, A. J., "Central Solar/Fossil Hybrid Electrical Generation: Storage Impacts," 1978 ISES, Denver, CO, August 1978.

2. Proceedings of the Twenty-Second Automotive Technology Development Contractors' Coordination Meeting, Dearborn, MI, October 29-November 2, 1984, SAE Publication No. P-155.

3. Washom, B. J., Vanguard I Solar Parabolic Dish-Stirling Engine Module, Final Report, DOE Publication No. DOE-AL-16333-2 (84-ADV-5), September 1984.

4. Stearns, J. W., and Haglund, R., "High Performance Solar Stirling System," AIAA Paper No. 81-2554, December 1981.

5. Bankston, C. P., and Back, L. H., Dish Stirling Solar Receiver Combustor Test Program, DOE Report No. DOE/JPL-1060-41.

6. Richter, R., Thermal Energy Storage Evaluation and Life Testing, Interim Report No. AFWAL-TR-82-2117, January 1983.

7. Zimmerman, W. F., "Heat Pipe Solar Receiver With Thermal Energy Storage," in Parabolic Dish Solar Thermal Power Annual Program Review Proceedings, DOE Report No. DOE/JPL 1060-46, May 1981.

8. Chen, K., and Manvi, R., "Metal-Halide Mixtures for Latent Heat Energy Storage," Solar Engineering 1981, Proceedings of the Third Annual Conference on System Simulation, ASME, pp. 667-674, Reno, NV, 1981.

9. Phillips, W. M., and Stearns, J. W., "Advanced Latent Heat of Fusion Thermal Energy Storage for Solar Power Systems," IECEC Paper No. 859058, August 1985.

10. Heat Pipe Solar Receivers Detailed Design Review, General Electric Co., Advanced Energy Programs Dept., October 2, 1980.

APPENDIX A

DISH-STIRLING SYSTEM ESTIMATES AND UTILITY VALUES

Solar Collector Parameters

The solar collector parameters are summarized in Table A-1 (References A-1, A-2) for the dish-Stirling system module. Both glass and plastic reflectors are identified. However, unless very high production quantities are assumed, automation for the glass reflector will not be achieved, and labor costs will be very high. Thus, initial solar modules are expected to utilize plastic reflector elements.

Reflector surfaces are silver, with a reflectivity of approximately 0.93. This number is, on the average, reduced by five percent for dust buildup and four percent for shading and blocking factors. Parasitic correction factor is primarily a drain on the electrical power output for the power conversion unit (PCU), but is chargeable to the concentrator.

Receiver temperature is to be maintained below 820°C, and summer mean daytime ambient temperature is roughly 40°C. Any thermal storage is to be compatible with this temperature regime. Effective absorptivity is based on a gray cavity with 10:1 area ratio. Intercept factor can be varied with concentrator rim angle for the specific geometric concentration ratio (GCR).

The testing of the dish-Stirling solar receivers at Edwards AFB, California, and the testing of the Vanguard receiver at Palm Desert, California, have indicated that these solar dish receivers, unlike the central receiver, apparently have very little convective heat loss if carefully designed. Thus, receiver efficiency will basically involve radiative, conductive and reflective losses.

Table A-1. Solar Collector Parameters (Preliminary)

$$\eta_{coll} = (\eta_c)\,(\eta_r)$$

$$= (\rho\{K_p\}\ K_D\ K_B)\left[\alpha_{eff}\,\gamma - \frac{\sigma\varepsilon({T_R}^4 - {T_\infty}^4) + H_V(T_R - T_\infty) + \frac{A_w}{A_0}G(T_R - T_\infty)}{\rho\{K_P\}\ K_D\ K_B\ C\ I_{DN}}\right]$$

$$\gamma \approx 1 - \exp\left[-\frac{\sin^2\theta_R}{2\sigma_B^2 C}\right]$$

$$G = \left[\left(1/k\right)\sqrt{\frac{A_w}{A_\infty}}\ (R_\infty - R_w) + \frac{A_w}{A_\infty}\ (1/H_\infty)\right]^{-1} \mathrm{W/m^2 - {}^\circ K}$$

where:

ρ = Concentrator reflectivity (~0.93)

K_P = Concentrator parasitic correction factor (~0.98)

K_D = Concentrator dust correction factor (~0.95)

K_B = Concentrator blocking/shading correction factor (~0.96)

α_{eff} = Receiver cavity effective absorptivity (~0.98)

γ = Focal plane optical intercept factor (~0.97)

$\sigma_B = \sqrt{\sigma_{SUN}^2 + \sigma_{POINT}^2 + 4\sigma_{SLOPE}^2 + \sigma_{SPEC}^2}$, angular deviation, radians

$\sigma_{SUN} \simeq$ 2.18 mr with solar limb darkening

$\sigma_{POINT} \simeq$ 1.75 mr tracking error

$\sigma_{SPEC} \simeq$ 0.5 mr (glass) and 2 mr (plastic)

$\sigma_{SLOPE} \simeq$ 1 mr (glass) and 2 mr (plastic)

σ = Stefan-Boltzmann constant ($5.67 \times 10^{-8}\ \mathrm{W/m^2\text{-}{}^\circ K^4}$)

ε = Receiver cavity effective emissivity (~0.9)

T_R = Receiver mean temperature (~820°C, 1093°K)

Table A-1. (Contd)

T_∞ = Ambient temperature (~40°C, 313°K)

H_V = Convective heat transfer coefficient (~10^{-4} W/m^2-°K)

C = Collector geometric concentration ratio (~2000-2500)

I_{DN} = Direct normal insolation, (~1000 W/m^2 peak, ~850 W/m^2 avg)

k = Insulation conductivity (~0.07 W/m-°K and/or ~0.13 W/m°K)

A_O = Focal plane aperture area

A_W = Receiver cavity wall area (~10 A_O)

A_∞ = Insulation outer surface area (~0.2 A_W)

R_∞-R_W = Insulation thickness (~0.02 m)

H_∞ = Insulation-to-ambient heat transfer coefficient (~5 W/m^2-°K)

$$\text{Thus, } \eta_{coll} \simeq 0.78 - \frac{\sigma\varepsilon(T_R^4-T_\infty^4) + H_V(T_R-T_\infty) + 10\ G(T_R-T_\infty)}{C\ I_{DN}}$$

High-temperature conductivity of the receiver insulation jacket is presently estimated at 0.07 W/m-°K for the TES receiver and 0.13 W/m-°K for the lower-cost solar only receiver. At 800°C, solar only receiver efficiency is estimated at approximately 0.92 unless reflective losses are high (as in the direct-coupled solar only receiver).

Power Conversion Unit Parameters

The variable swashplate Stirling engine is now being designed for operation at 3600 rpm, a mean pressure of 13 MPa, and a peak output (insolation = 1000 W/m^2) of 55.4 kW. At an average electric power output level of 41 kWe (insolation = 845 W/m^2), the PCU efficiency is estimated at 40 percent. Solar collector heat input to the Stirling engine is 127 kWt, engine eficiency is 43 percent, generator efficiency is 93 percent, and 1.2 kWe are required for auxiliaries and parasitics. The engine-generator is shown in Figure A-1 (Reference A-3). Including cooling system, controls and instrumentation, PCU mass is approximately 300 kg, based on the variable swashplate Stirling engine.

Based on component design life of 10^5 h analyzed for the variable swashplate Stirling engine components, PCU mean-time-between-overhaul is expected to be 35,000 hours. On this basis, annual maintenance cost is expected to be approximately two percent of the equipment price. Life testing for the variable swashplate engine is expected to commence in 1986.

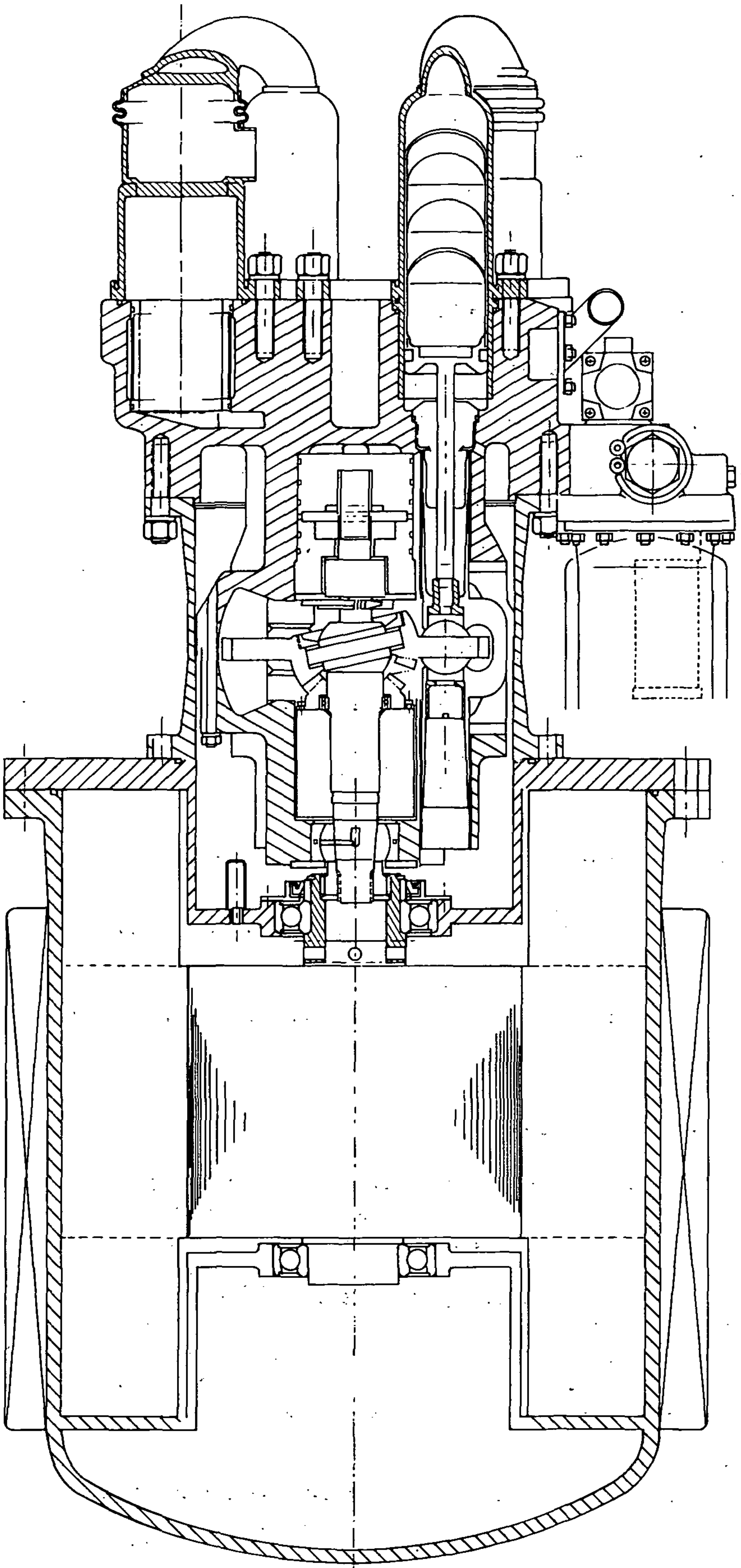

Figure A-1. Stirling Thermal Motors Variable Swashplate Engine and Induction Generator

Utility Values

Utility avoided cost pricing includes both energy and capacity displacement. Each utility has a different price schedule, depending on the mix of generating equipment. Southern California Edison Co. is used herein (Reference A-4). The summer season is specified as June through September; the winter season is October through May. In addition, weekdays are broken into on-peak, mid-peak, and off-peak periods. Weekends and holidays are included in off-peak hours. Avoided cost pricing is shown in Table A-2.

The utility price of natural gas is $4.40/10^6 Btu, or $0.015/kWt. The solar hybrid combustor is estimated to be 90 percent efficient, the PCU at 40 percent efficiency, leading to $.0417/kWhe for a basic fuel price. Operation of the combustor is not, under the SCE price schedule, considered practical for electric generation during off-peak hours when additional maintenance requirements are imposed on the system.

Table A-2. Southern California Edison Company
Avoided Cost Pricing Summary, November 1985
(¢/kWhe)

Price Element	On-Peak	Mid-Peak	Off-Peak	Average
Energy - Winter	5.9	4.8	4.2	4.5
Capacity - Winter	2.47	0.55	0.07	0.23
- Summer	10.33	0.12	0.05	0.93
Bonus - Winter	0.44	0.10	0.01	0.04
- Summer	1.86	0.02	0.01	0.17
Schedule Hours				
- Winter	5p-9p	8a-5p	other	
- Summer	Noon-6p	8a-11p	other	

REFERENCES

A-1. Ford Aerospace & Communications Corp., Phase I of the First (Solar) Small Power System Experiment, Final Report No. U-6529, May 1979.

A-2. Wen, L., Huang, L., Poon, P., and Carley, W., "Comparative Study of Solar Optics for Paraboloidal Concentators," ASME Paper No. 79-WA/Sol 8, December 1979.

A-3. Meijer, R. J., "Long-Life 50-kW STM4-120 Stirling Solar Power Conversion Unit," JPL Consulting Services Agreement No. PN821283, December 1985.

A-4. Southern California Edison Co., Avoided Cost Pricing Update, November 1984.