N86-30163

SIMULATION OF NON-LINEAR BEARING FORCES FOR POST-STABILITY INVESTIGATION

Z.A. Parszewski, J.M. Krodkiewski, K. Krynicki, and A.E. Salek
University of Melbourne
Parkville, Victoria 3056 Australia

Advanced rotor-bearing design requires increasingly non-linear analysis to give a comprehensive view of the effects caused by journal bearings. Journal bearings introduce into the system a nonlinear asymmetry and strong damping. Unstable regions predicted from a linear analysis of the bearing,(i.e. using stiffness and damping matrices) are understood as regions in which amplitude of vibrations increases with time. The non-linear mechanism limits the amplitudes of vibration of unstable rotor-bearing systems and forms limit cycles. Disbalance of the rotor existing in the system frequently causes subharmonic resonances to appear.

Different types of bearing designs have been developed to improve dynamic properties of rotor-bearing systems. Elliptical bearings, multi-sleeve bearings, tilting pad and other designs such as herringbone groove have been utilized to increase resistance to the onset of self-excited vibrations.

Experimental trials are costly, two alternative methods are possible to gain a qualitative insight. The first one creates mathematical model and applies both a digital or an analog computer simulation. The second one investigates phenomena occurring on the laboratory rig with the bearing replaced by an electronic simulating device, working in a feedback loop, which produces forces which are function of journal displacement and velocity. The simulated hydrodynamic forces are produced according to assumed characteristics matched to the bearing type.

The principal benefit of the analog simulation is that non-linear characteristics of a subsystem may be precisely identified and mathematical methods applied for a wide class of problems can be checked on the experimental instalation.

JOURNAL BEARING SIMULATION

Integration of the Reynold's equation results in values of the hydrodynamic force components. The hydrodynamic forces are functions of a journal displacement and velocity, but they are not given explicitly.

A hydrodynamic force representation can been assumed as a combination of chosen a priori functions f :

$$F_x = C_1 f_1 + C_2 f_2 + \ldots + C_n f_n \qquad F_y = D_1 f_1 + D_2 f_2 + \ldots + D_n f_n \qquad /1/$$

The coefficients C and D can be matched by minimizing the errors between values coming from /1/ and the integration of the Reynold's equation for given motion parameters.

In the alternative method, using the shape function characteristics of a journal bearing [1], the functions f play the role of shape functions and the nodal values play the role of coefficients C and D. This assures directly minimization of the error. Moreover the nodal values of hydrodynamic force can be evaluated from an experimental measurement. However in this concept a microprocessor should be involved for the bearing forces transfer in the simulator.

In order to modify a system characteristics e.g. a soft or hard stiffness, the electronic device has been designed to produce the components of the force according to the formula /2/:

$$F_x = k_{xx} f(x) + k_{xy} f(y) + c_{xx} \dot{x} + c_{xy} \dot{y}$$

$$F_y = k_{yx} f(x) + k_{yy} f(y) + c_{yx} \dot{x} + c_{yy} \dot{y} \qquad / 2 /$$

where function f has been modeled as:

$$f(z) = z(z^2 - z_o^2) \qquad / 3 /$$

The system characteristic is built by a superposition of both characteristics: a mechanical one and an electronic one. A proper choice of the coefficients k results in a hard or soft stiffness. By shifting the electronic characterictics along x or y co-ordinates an unsymmetrical stiffness can be obtained which allows modeling of bearing external static load.

In some cases when linear effects introduced by a journal bearing have to be taken into consideration the function f in /3/ can be modeled as a linear one. The coefficients k and c in the formula /2/ will represent stiffness and damping coefficients corresponding to the statical position determined by the Sommerfeld number.

BEARING SIMULATOR

The electronic device has been designed according to the following assumptions:
- input data analog conversion to satisfy the conditions of real-time active feedback control.
- biaxial input/output,
- input maximum of signal 8 V which corresponds to a journal displacement of 1 mm,
- frequency range 500 Hz,
- output maximum of signal 8-12 V which corresponds to 10 N force.

The block structure and performance of the analog support simulator are shown in Fig.1. The input amplifier IA amplifies the sum of input signals and D.C. voltages produced by the sources RPX and RPY(allowing for balancing), and protects the device aganist overloads. The gain of IA amplifier can be chosen by the displacement range selector DS.
The gain of the DA amplifier, which differentiates the signals, is selected depending on frequency. The frequency selector FS protects the DA amplifier and other stages of the device aganist saturation at the higher frequencies and differentiates with good linearity.
The function generator FG produces a linear or nonlinear function, according to Fig.2, dependent on the position of the mode selector MS. The output signals are amplified by the linear amplifiers A1-A4 (damping and stiffness matrices). The voltage comparators CPX detect overload (saturation) stages. The output amplifiers OAX and OAY provide the final gain for the output siganls.

EXPERIMENTAL RIG

The experimental rig has been designed to observe and study non-linear phenomena introduced by a non-linear support e.g. a journal bearing. The main aims of experiment are to study self-excited vibrations and effects of an external harmonic force acting in an unstable region.

The journal bearing has been replaced by the analog support simulator working in a feedback loop to create wider facilities. The non-linear element can be identified with high precission, so theoretical results can be checked on an experimental rig. The scheme of the rig structure is shown in a block diagram (Fig.5).

The experiments have been designed in such a way that substructure identification, self-excited vibrations and disbalance effects (subharmonic resonances) can be studied on the same rig (Fig.4-5).

The active feedback control loop contains the following devices: displacement transducers DT, analog support simulator SS, voltage amplifier ASA, power amplifier PA, electronic vibrators V (shakers) and force transducers FT.

Biaxial displacements x,y of the journal are converted into voltage signals by transducers DT. The analog support simulator has these signals as an input. The output signals of two channels can be mixed by the analog amplifier ASA with two signals in time quadrature produced by the tuned generator G,if necessarly (simulating shaft disbalance). Then the signals are amplified by the power amplifier and supply the electrodynamic vibrators. The vibrators convert the signal to the biaxial interaction forces between the bearing and the journal.

Both displacement and force signals are observed on the two-channel oscilloscopes. The displacement signals are currently analysed by the spectrum analyser, so the frequencies of the vibrations can be found immedietally.

The experimental data are collected by a PDP-computer. The analog adaptor AA memorizes periodically the analog input signals and sends them to A/D computer converter without any phase shift errors.

IDENTIFICATION OF MECHANICAL SUBSYSTEM

The receptance method has been used for parameter identification of the mechanical subsystem. Responses of the subsystem along the connecting co-ordinates have been found experimentally for harmonic excitations in the range of frequency 5-60 Hz.

The receptances were measured directly on the same experimental rig, by introducing signals to the shakers from a frequency syntesizer FS, and at the same time cutting off signals coming from the bearing simulator. The forces produced by the shakers and journal displacements are measured and stored in computer memory for various values of frequency.

A computer program is used to estimate subsystem parameters in the neighbourhood of a working point.

IDENTIFICATION OF ELECTRO-MECHANICAL SUBSYSTEM

The forces modifying the system are the result of a electro-mechanical loop which involves the bearing simulator, mixer, power amplifier and shakers. So the characteristics of the subsystem should be found entirely.

By cutting the feedback loop and introducing the signals coming from the frequency synthesizer instead of measured journal displacements, corresponding output forces are measured and stored together with the input signals. The input voltages are multiplied by the scale-factors of the displacement transducers to obtain values of the simulated journal displacements.
Introducing a harmonic signal:

$$z = Z \exp(i\omega t) \qquad / 4 /$$

the damping matrix in /2/ can be found as the imaginary part of the force produced by the unit input signal. the real part is associated with the stiffness of the subsystem. The influence of frequency on the stiffness and damping matrices has been investigated. It has been proved that in the electro-mechanical loop both stiffness and damping coefficients kept constant values,it is shown in Fig.6-7.

According to the design assumptions the bearing simulator produces non-linear stiffness, independent of frequency /3/. This has been confirmed by measurements at different frequencies when damping coefficients were zero, the results are shown in Fig.8. The non-linear characteristics can be found at low frequencies as then the contribution of damping may be neglected. Introducing a harmonic signal with a low frequency, separately for each channel, the force components are measured as functions of the amplitudes (Fig.7).

An electro-mechanical identification does not depend on rotor motion except when the system resonates. To estimate the error introduced by a resonance for the same setting of the bearing simulator the measurements have been repeated and compared with a fixed journal. The deviations between system characteristics were not higher than 10 percent (Fig.6).

EXPERIMENTAL RESULTS

In the first phase of the experimental investigations the possibility of existence of more than one equilibrium position has been shown. Diagonal elements of non-linear stiffness matrices having negative values at zero have been introduced. For some values of stiffness the equilibrium position vanished. Zero was a fixed point but it could not exist physically because it was unstable (Fig.3). The system would move at one of the four existing stable positions. Any small perturbation caused a motion decaying with time around an equilibrium position.

An asymmetry caused by the cross-elements destabilized the system. Due to the existence of non-linearity limit cycles were formed. Some examples have been shown in Fig.9-11. These figures present the trajectories of the journal displacements and corresponding generated forces as well as their time representation. For some settings of the non-linear stiffness and damping multi-frequency limit cycles have been observed (Fig.10). A limit cycle with a jumping amplitude around two equilibrium positions has been also found (Fig.11).

The effects of shaft disbalance simulated by an external harmonic force have been observed. When the external frequency corresponding to the rotational speed of the rotor was remote enough from the frequency of self-excited vibrations in the system, both self-excited vibrations and subharmonic resonances existed. When the distance between frequencies was about 1-10 Hz the type of vibration was determined by the magnitude of the excitation (rotor disbalance). For small values of external excitation no steady state was achieved. A combination of self-excited vibrations and subharmonic resonances appeared in the system. Over a certain value of external excitation, the system established only one type of vibration.

REFERENCE

1. Parszewski Z.A., Krynicki K,: Shape Function Characteristics of Journal Bearing. Proceeding of Tenth CANCAM 85.

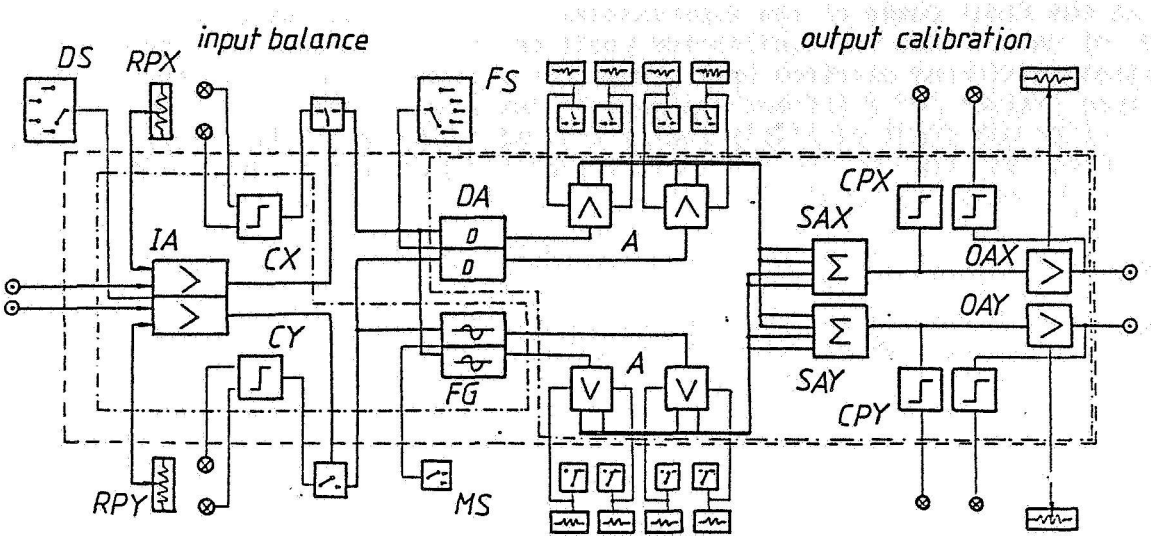

Fig.1. Analog support simulator

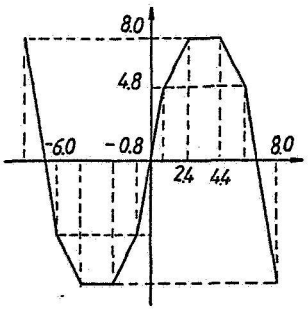

Fig.2. non-linear characteristic

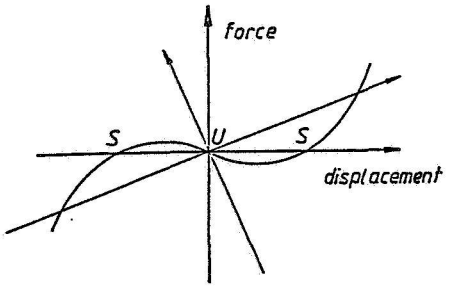

Fig.3.

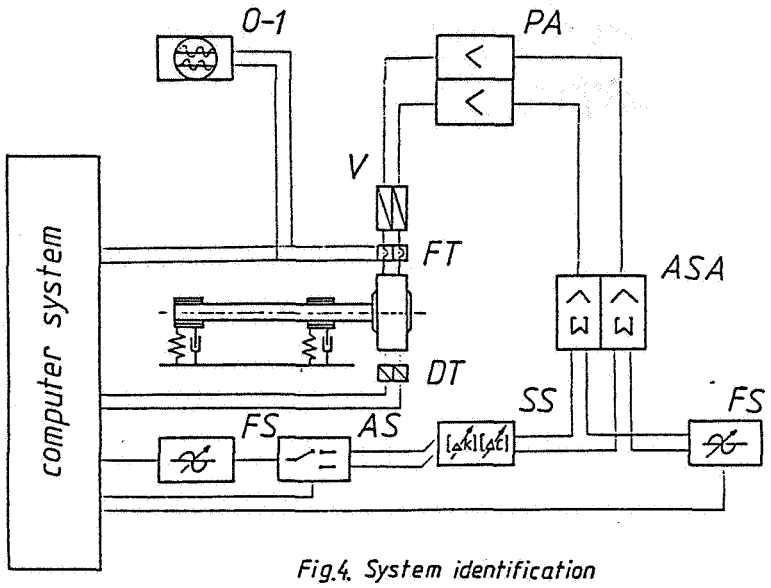

Fig.4. System identification

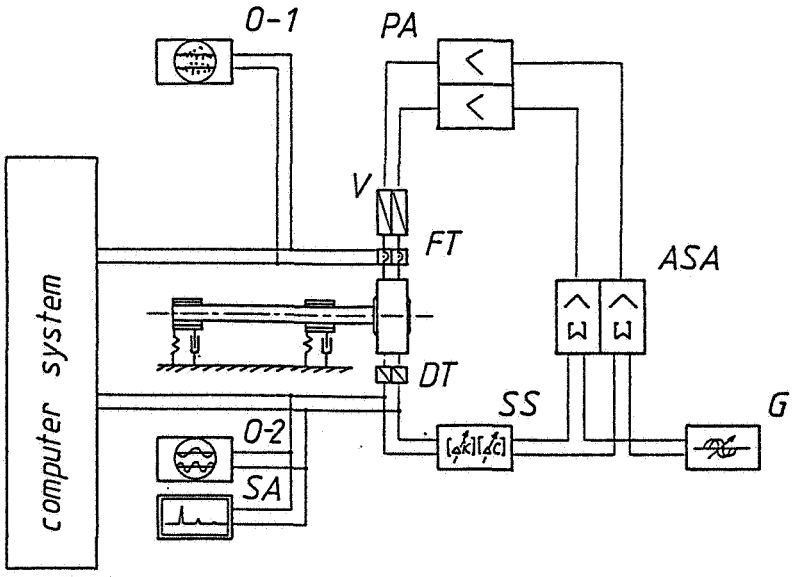

Fig.5. Experimental rig

ORIGINAL PAGE IS
OF POOR QUALITY

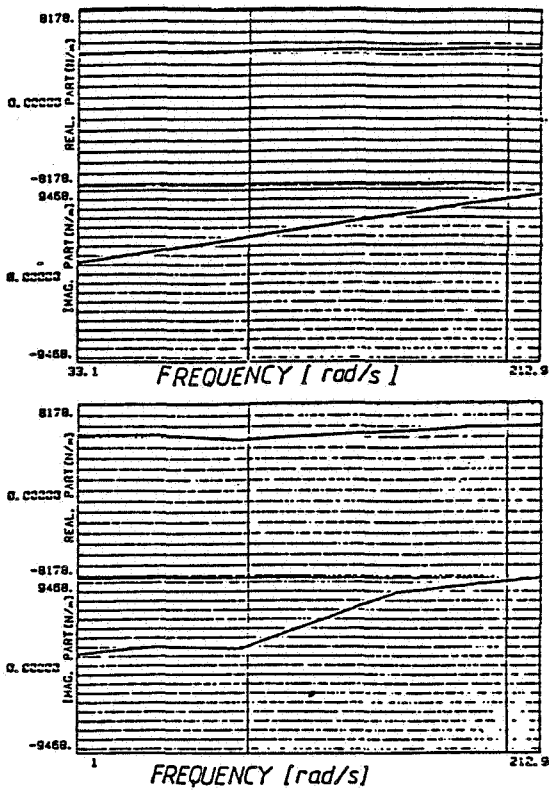

Fig.6

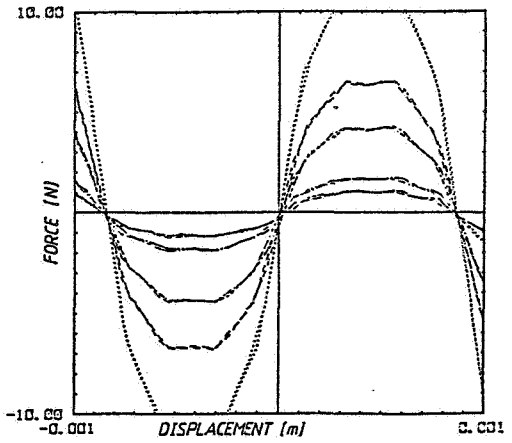

Fig.7

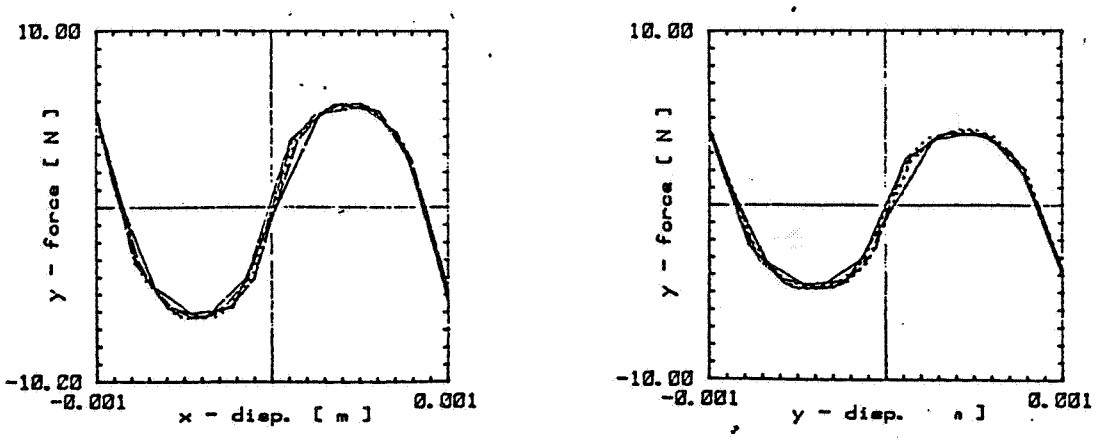
10.00
y - force [N]
-10.00
-0.001
x - disp. [m]
0.001
10.00
y - force [N]
-10.00
-0.001
y - disp.
0.001

Fig. 8

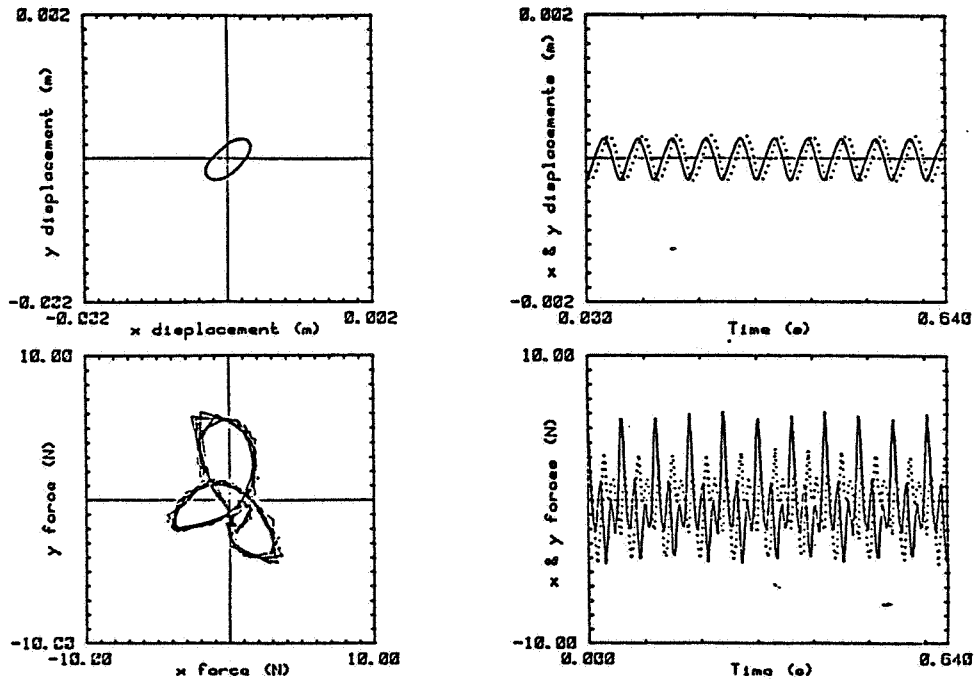
0.002
y displacement (m)
-0.002
-0.002
x displacement (m)
0.002
0.002
x & y displacements (m)
-0.002
0.000
Time (s)
0.640
10.00
y force (N)
-10.00
-10.00
x force (N)
10.00
10.00
x & y forces (N)
-10.00
0.000
Time (s)
0.640

Fig.9

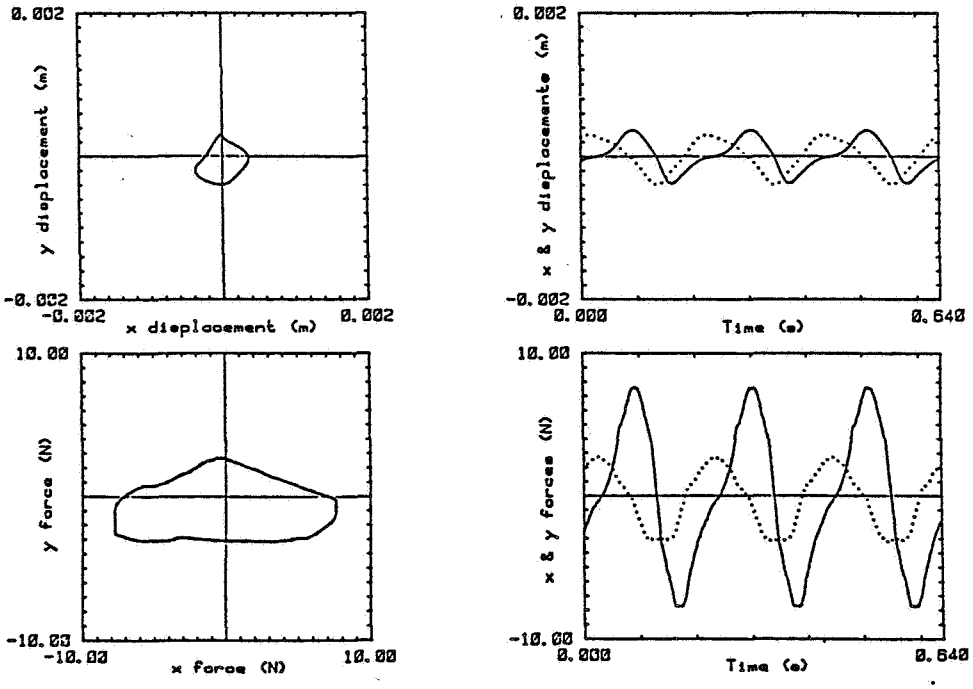

Fig.10

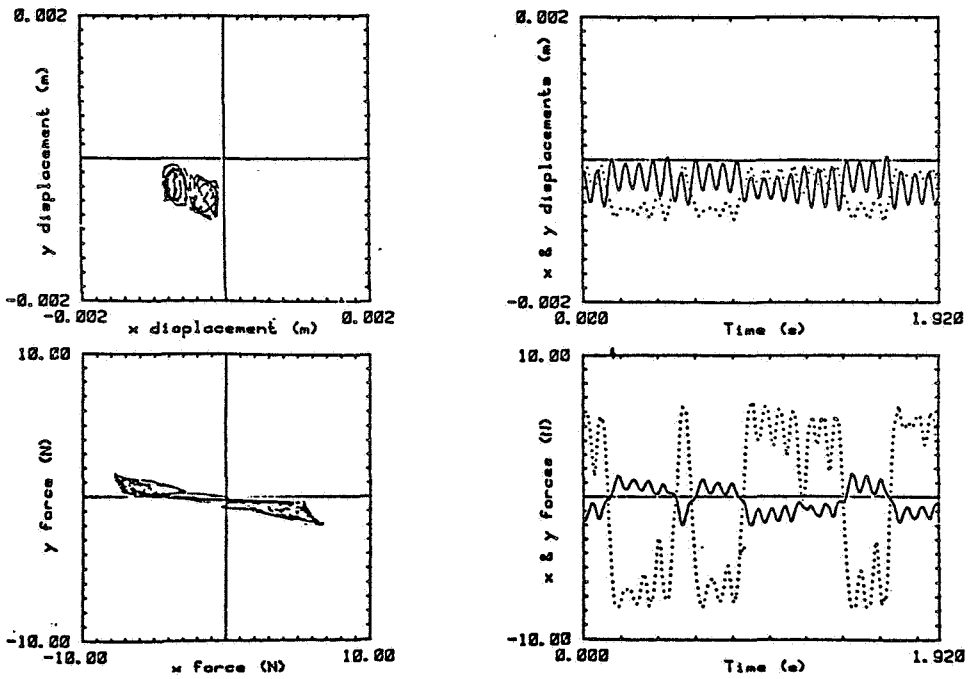

Fig.11

ORIGINAL PAGE IS
OF POOR QUALITY