N88-16660

MCDONNELL DOUGLAS HELICOPTER COMPANY INDEPENDENT RESEARCH AND DEVELOPMENT - PREPARING FOR THE FUTURE

BY A. C. HAGGERTY

EXECUTIVE VICE PRESIDENT/ENGINEERING AND OPERATIONS
MCDONNELL DOUGLAS HELICOPTER COMPANY

ABSTRACT

Over the course of the 1970's and 1980's, there was a broad industrial investment in research and facilities to update rotary wing technology. Hand-in-hand with the industry's Independent Research and Development (IRAD) investment, went a similar government investment in Contracted Research and Development (CRAD). These two initiatives have converged to produce the technology present in the 80's that we see in aircraft such as the LHX and future models. This paper discusses the technology that is reaching maturity and moving into the application stage of future programs. Technology is discussed in six major thrust areas: Advanced Concepts, Analysis Techniques, Structures, Systems, Simulation, and Research and Development facilities. The partnership of McDonnell Douglas Helicopter Company and the government in developing these technologies is illustrated in several programs.

INTRODUCTION

Over the course of the last 10 to 15 years, rotary wing technology has advanced on a broad front (Figure 1). This technology advancement has included not only the small individual projects and their interaction, but also the use of these projects as building blocks to be combined and integrated into current and future operational aircraft. At McDonnell Douglas Helicopter Company (MDHC), these programs have included a wide range of technology demonstrators including infrared suppression, advanced rotors and hubs, advanced directional control devices, simulation and analysis development. These technology programs were then integrated into the current operational aircraft at McDonnell Douglas to provide wind tunnel test beds to further flight development. Unique to McDonnell Douglas Helicopter Company was the application of these technologies into our Ordnance programs to develop integrated weapons platforms.

There's a strong interaction between McDonnell Douglas Helicopter's main aircraft products: the MD 500 series, AH-64A, and Advanced Concepts (LHX). The light MD 500 series aircraft is used to validate and demonstrate that technology in a cost efficient, rapid method and then the concepts are transferred into the AH-64 where they are developed and matured to the point for application to the LHX, a program scheduled for a 1988 initiation. All of these programs have interactive cross fertilization as part of their development. Concepts developed and validated on the MD 500 influence the Apache developments which then influence the LHX development. Conversely, concepts seen in LHX and projected for LHX are being tested and integrated into the AH-64 and down into the MD 500 series and its derivatives.

These technology developments were in the truest sense a partnership between McDonnell Douglas Helicopter and government contracting agencies. McDonnell Douglas Helicopter Company through its IRAD funded programs would advance a technology to a certain stage, at which time Contracted Research and Development (CRAD) support was provided to move the technology to the next higher integration level. The results would then develop into joint programs so that the technology development we're talking about today is truly the result of a partnership between government and industry.

The partnership and the technology that it has produced can be grouped in six major thrusts: Advanced Concepts, Analysis Techniques, Structures, Systems, Simulation, and Research and Development Facilities as shown in Figure 2. A review of these major thrusts will illustrate the level of technology available and the development process.

ADVANCED CONCEPTS

The research work in Advanced Concepts produced designs that improved the current generation helicopters along the lines of noise, safety, vibration control, speed enhancements and signature. Typical of the Advanced Concepts is the No Tail Rotor (NOTAR)™ concept which replaces the conventional tail rotor with a combination of a circulation control tailboom and direct jet thruster. In the NOTAR concept (Figure 3), the tailboom now generates force using circulation control principles. A thin stream of air emitted out of one side of the tailboom influences the main rotor downwash to flow around the tailboom to produce an anti-torque force in much the same manner as the circulation control airfoils on the X-wing. In hover, under high downwash conditions, the circulation control tailboom generates the majority of the trim anti-torque force. For the additional trim anti-torque force and for maneuvering, or when the circulation control tailboom is ineffective, a direct jet thruster at the aft end of the aircraft provides the required force. The direct jet thruster is a cone within a cone. The inner cone has fixed exit areas, right and left. The outer cone rotates about the inner cone to modulate the amount and direction of the thruster force. The air for both the circulation control tailboom and the direct jet thruster is provided by a variable pitch fan mounted at the forward end of the aircraft. The pressures and flow velocities within the NOTAR concept are relatively low for circulation control, being about a half a pound per square inch, producing slot and thruster velocities on the order of 250 feet per second.

The thruster and the pitch of the variable pitch fan are controlled from the pilot's directional control inputs in the same manner as it is in conventional helicopters (Figure 4). For a pedals-neutral type position, there is a moderate blade pitch, a flow of air from the slot and the thruster is open to the left (the primary turn direction). To initiate a pedal turn either right or left, blade pitch is increased, the thruster is rotated to provide force to initiate the turn in the desired direction. In this illustration, pedals are used but a side-arm controller could also be used.

The history of NOTAR and how it grew from a small company-funded technology evaluation program through a government-contracted concept evaluation and then into a government-supported demonstrator aircraft, is an excellent example of the partnership of IRAD and CRAD (Figure 5). The NOTAR concept was initially a company-funded program to evaluate the ability of circulation control to produce anti-torque force. This concept was demonstrated on a bench set up at the whirl tower at our Culver City facilities. Once the base data was acquired, the power efficiency of the circulation control tailboom and its potential for integration into a total directional control device became apparent.

That circulation control tailboom concept was then carried into flight evaluation sponsored by AATD. From the results of that program, NOTAR grew into a DARPA and AATD supported demonstrator aircraft that integrated the circulation control tailboom, direct jet thruster and the variable pitch fan. The integrated aircraft was then flown to demonstrate response and handling qualities and validate the total concept. The results were very encouraging, however, more technology development was indicated. McDonnell Douglas Helicopter Company carried on the NOTAR concept using IRAD funding to evaluate the technology questions that grew out of the demonstrator aircraft, to mature the NOTAR technology and to make it ready for the next generation of rotorcraft.

An example of the application of company funds was the effort initiated to understand the flow around the circulation control tailboom. The objective was to eliminate the fences that were added during previous flight tests. After several attempts at an analytical solution, McDonnell Douglas Helicopter Company embarked on an experimental program. A scale model NOTAR configuration was built and tested at the McDonnell Douglas Research Laboratory water tank hover test facility in St. Louis (Figure 6). The flow conditions seen in the base aircraft were evaluated and configurations developed. The water tank testing provided flow visualization data using laser doppler experimentation to improve the aerodynamic characteristics of the NOTAR aircraft (Figure 7). With the excellent visualization techniques, we were able to define the flow attachment around the boom and its interaction with other sections of the aircraft. In the water tank, we successfully duplicated the adverse flow condition found in flight; duplicated the effects of the flow fences we had developed in flight; and then using that validated technique, developed an alternate configuration without aerodynamic fences that provided the proper flow characteristics around the boom (Figure 8). The final solution turned out to be the addition of a second slot upstream of the initial circulation control slot. Based on that laboratory result, the flight aircraft was modified in early 1986 under company funds and successfully flown as shown in Figure 9, "completing the loop" of laboratory tests and flight test validation.

The improved NOTAR successfully flew over the entire flight envelope demonstrating dramatic expansions of the base aircraft envelope. This aircraft has continued to fly to provide the data base necessary to support this application in future rotorcraft.

Another example of the cooperation between industry and government in Rotorcraft Technology Development is the cooperative Army/NASA/McDonnell Douglas Helicopter Company research program in Higher Harmonic Control (HHC). HHC is an active closed loop vibration suppression system. The need for HHC grew out of work done through the 1970's that indicated that the vibration level of rotorcraft had reached a plateau and to achieve the reduced vibration levels desired would require an active system as shown in Figure 10. The Higher Harmonic Control system (Figure 11) has vibration sensing accelerometers located within the aircraft at desired locations to monitor vibration level. The vibration level is then fed to a computer that decides how to modulate main rotor pitch to reduce vibration. The pitch modulation is then fed into high frequency actuators in the main rotor system to change the pitch on the main rotor blades. For this particular test aircraft with four blades, the primary frequencies driven are the three, four and five per revolution. To date, the test aircraft has demonstrated a 10:1 reduction in vibration levels as compared to the baseline aircraft. To the maximum speed envelope of the OH-6A test aircraft, vibration levels on the order of 0.02G's have been demonstrated. Refinement of this work has continued in order to be prepared for the application to our future rotor wing designs.

The Higher Harmonic Control concept grew out of the NASA and Army Laboratories in the early 1970's where model wind tunnel testing indicated the potential for an active system to reduce vibration. Based on the results of the wind tunnel tests, the concept was taken to the flight phase under a NASA/Army contracted program with McDonnell Douglas Helicopter Company (then Hughes Helicopters). Concurrent with that contract, McDonnell Douglas Helicopter Company provided IRAD funding to develop and advance the state of the controller technology to support open-loop flight testing.

Subsequent to the completion of the flight testing phase, further algorithm developments were funded by McDonnell Douglas Helicopter Company to improve the HHC effect and further expand the flight test envelope.

Another example of an advanced concept growing out of our company-funded program into the flight vehicles of today is a unique Infra-Red (IR) suppression device (Figure 12). This engine exhaust IR suppression device (called BHO) is found in two configurations. One is an externally cooled fin system and the other is an internally cooled fin. In both concepts, the exhaust gases are used as ejectors to draw in cool ambient air to dilute the plume and cool the metal thickness. The present design of the BHO is found on the AH-64A. The second generation (self-contained) IR suppression system has been shown and demonstrated for the Bell H1 series of aircraft as well as for the Sikorsky CH53E. This technology was originally developed and demonstrated on a small Bell OH-58 aircraft; it then evolved through our own MD 500 series aircraft into the H1 series, the AH-64 Apache, and then it was demonstrated on the ground on the CH53E (Figure 13). In all cases, the suppressor has shown outstanding performance. It is currently being incorporated as part of the next aircraft generation.

ANALYSIS TECHNIQUES

Rotary wing analysis development is a complex, inter-related challenge. In addition to the traditional rotor and fuselage aerodynamic/dynamic issues, there are rotor-body, body-rotor, and rotor-rotor interactions. The main rotor sees the complete flight spectrum from retreating blade stall to high advancing blade tip Mach numbers and the resulting transonic issues. These phenomenona must be integrated into a single analysis technique to provide for vibration reduction and prediction of rotor blade loads, aerodynamic performance and acoustic signature.

McDonnell Douglas Helicopter Company has been active in attacking this analysis issue in all fronts through its internally funded efforts that are summarized in Figure 14. In addition to programs on fuselage aerodynamics such as VSAERO and X3D (full Euler code), there are programs in retreating blade dynamic stall, hub dynamics and rotor fuselage coupling. The high speed advancing tip, three dimensional flow field is being integrated as part of our aeroacoustic effort to be fed into the definition of external noise. These analysis efforts are largely company-funded and aimed at supporting our own rotorcraft design efforts. However, the NASA and Army Laboratories have supplied us with their computer programs to complement our efforts. This is truly a cooperative, cost effective effort.

An example of a McDonnell Douglas Helicopter company-funded analytical program development is Rotor Airframe Comprehensive Aerolastic Program (RACAP). RACAP models the complete elastic response of the main rotor system as well as the elastic coupling between the main rotor and the fuselage. It is aimed at providing rotor blade loads of advanced bearingless rotors to be used in performance and vibration analysis. RACAP was developed in-house and is now being moved forward and integrated into the NASA sponsored DAMVIBS effort. An example of RACAP's correlation with flight test data is shown in Figure 15 which shows RACAP's predictions using two wake models. In both cases the correlation is shown to be very good.

The impact of using a coupled rotor fuselage approach as opposed to an isolated rotor is shown in Figure 16. Here we can see a dramatic improvement in flap bending moment prediction versus azimuth with the incorporation of the elastic coupling between the rotor and the fuselage. All of these RACAP capabilities are exploited when RACAP is combined with a finite element NASTRAN analysis of the fuselage. On Figure 17, we can see the predicted impact on AH-1G fuselage flight test vibrations of the elastic rotor fuselage attachment. There is a dramatic improvement in the correlation with flight test data moving from a fixed hub model to a flexible hub fuselage coupling.

The advent of multi-disciplinary optimization codes have also provided a powerful analysis tool to rapidly analyze new designs. McDonnell Douglas Helicopter Company has been active in integrating optimization codes into its design process. These efforts have been funded internally but supported in a very active and important way with the research work being done in the Army and NASA laboratories. McDonnell Douglas Helicopter Company's plan was to

initially develop the optimizing approach and optimizer techniques using a well-bound design problem. The aerodynamic performance of the rotor was selected for analysis development. Having once achieved capability in this area, these techniques would then be extended to more complex mathematical efforts such as structural optimization. In this effort, we were supported by the NASA/Army labs in providing optimization codes that they had evaluated and were under development in their own research organization. These codes hold great promise in that they allow simultaneous variation of many design parameters to achieve an optimum design (Figure 18). By expressing this optimization procedure mathematically and being able to automate the design approach, an optimum design can be obtained in a fraction of the time needed for more traditional parametric studies. McDonnell Douglas Helicopter Company's approach to the optimization effort is shown on Figure 19. Here we start with mission requirement definitions, move to a global level of optimization where the base configuration and base parameters are defined and then into a component level of optimization where the particular aircraft components are subject to indepth optimization techniques. As part of company-funded programs, we currently have efforts underway that look at the component level of optimization for airfoils performance, aeroelastic analysis, and structural analysis.

With the support and guidance of the Army/NASA researchers, McDonnell Douglas Helicopter Company evaluated several optimization codes and have used two primarily. One is CONMIN and the other is ADS, with ADS rapidly becoming our preferred optimization approach. The ADS code has been coupled with our own in-house analysis techniques for rotor loads (RACAP), structural response (NASTRAN), and performance analysis (BTRIM).

An example of this application is the development of a light helicopter rotor that was optimized for both forward flight at 140K and hover at 13,000-foot altitude. In this exercise, optimum twist, plan form, airfoil section, and airfoil distribution were selected by the ADS optimizer to satisfy the two design points of hover and forward flight as shown on Figure 20. The use of the ADS optimizer shows that rotor design can be achieved in 1/6 the time of more traditional parametric variation approaches. Since this initial exercise in rotor optimization, the optimizer techniques have been extended to the structural optimization of composite flexbeams.

STRUCTURES

The development of Advanced Structures has been driven primarily by the application of new materials and processes. The all metallic structure is rapidly being augmented with composite materials structures which promise reductions in weight and cost with attendant increases in fatigue life and strength. Both McDonnell Douglas Helicopter Company and the NASA/Army agencies have been active in defining material properties for composite materials and exploring their application on rotorcraft. Two examples of these are the Helicopter Advanced Rotor Program (HARP) and the Composite Fuselage work currently being done at McDonnell Douglas Helicopter Company.

The HARP rotor is an all composite rotor system that replaces all the bearings and joints of the conventional single rotor with a composite material flexture. Figure 21 shows the HARP rotor with its composite flat strap cruciform flexbeam, composite pitch case, and composite rotor blade. An elastomeric snubber damper is provided on the inboard end to provide in-plane damping as well as eliminate pitch flap coupling. The materials used in this experimental hub include Kevlar, fiberglass and graphite. The program concept behind HARP was to initially design the rotor system for the Apache helicopter (Figure 22). Further, once that rotor concept had been designed, it was scaled down so it could be flight tested on our Model 500 series aircraft. The rotor would then be flight tested through the entire envelope in order to create a data base that would support both the LHX development and Advanced Apache configurations. The initiation and execution of the HARP program is an example of the power of research initiatives within the Army/NASA laboratories. As a result of the Integrated Technology Rotor (ITR) efforts sponsored by the Army and NASA laboratories, McDonnell Douglas Helicopter Company launched the HARP program supported by company funds. This funding has moved the HARP from an initial design through laboratory and component testing, fabrication of flight worthy hardware, and through a complete flight program (Figure 23). The HARP has been demonstrated over the complete Model 500E envelope of speeds and load factors, demonstrating exceptional performance and structural integrity (Figure 24). Concurrent with the flight program the HARP model was scaled down and tested in the McDonnell Douglas Aircraft Company wind tunnel in St. Louis, Missouri over the same flight regime (Figure 25). This dynamically scaled model provides a flexible and important tool to extend the bearingless composite flexbeam rotor concept into other flight regimes. The data base from both flight test and scale model testing were used to design an advance composite hub for the AH-64 aircraft under contract from AATD (Figure 26). Again, we see an example of the partnership between industrial and government research efforts.

Another major thrust within McDonnell Douglas Helicopter Company as well as industry, has been the application of composite materials to helicopter fuselage structures. With the impetus of the government funded Advanced Composite Airframe Program (ACAP), a multi-phased, internally funded program at McDonnell Douglas Helicopter Company was initiated (Figure 27). The phases of the program flowed from initial coupon material characterizations, into concept development, through large scale component tests, and finally major airframe structure design. These phases were all aimed at developing a technology demonstrator that supports the upcoming programs in LHX, product improvement programs for Apache components and advanced commercial helicopters. The initial step in the composite fuselage program was to develop the component concepts to form a data base to support the total overall design. Typical of the type of design challenges were the stiffener shapes and intersections used in various designs. Through an intensive preliminary design effort, concepts were presented, fabricated and then taken forward into the laboratory test phase where they could be evaluated for their strength and energy absorption characteristics. Figure 28 shows several typical bulkhead tunnel beams of different design approaches under laboratory crush tests to evaluate their strength and energy absorption characteristics.

Once through that cycle, with the data base having been developed, full scale fuselage components were designed and tested to evaluate a total integrated design using our MD 500 series aircraft as the technology demonstrator (Figure 29). Concurrent with those totally integrated designs, larger components were then extracted from the lower fuselage to be fabricated and tested. A large section of the belly of the MD 500 series was extracted and used as a subject for a manufacturing and design study to improve the tooling and producibility effects (Figure 30). A series of tests and evaluations were conducted to validate both the design and the manufacturing approach. A unique crash impact test facility was developed to evaluate the energy absorption characteristics of the composite floor sections (Figure 31). In this test fixture, sections as well as the complete fuselage floor were crushed under controlled conditions to measure the strength and energy absorption capabilities. These tests were carried out in a sequential "building-block" approach and proved to be highly successful. The tests demonstrated a composite floor section capable of safely absorbing its energy share in a MIL-STD-1290 impact situation.

SYSTEMS

Advanced Avionics Systems have had a major impact on helicopter design; the pace of electronic improvement will guarantee this impact will accelerate in the future. An example of the impact of Advanced Avionics is crew station design. McDonnell Douglas Helicopter Company is currently pursuing the systems architecture technology required to provide a one-pilot operational capability. To support this effort, the front seat of the Apache helicopter has been transfigured into a one-pilot operable aircraft using advanced digital flight control technology (Figure 32). In this design, advanced digital flight control computers are integrated with multi-function displays and a full-authority side-arm controller to provide the single-pilot operability. The full authority digital flight control system commands all flight control elements within the aircraft to eliminate cross axis coupling. Automatic flight moding and artificial stabilization and flight control are also included in the full authority digital flight control system. This aircraft is now undergoing extensive flight testing to validate the flight control laws developed in the simulation.

As further support to the flight controls and systems development, the MD 500 series of aircraft has been used extensively to develop cockpit integration and sensor development techniques that flow technology through to the larger AH-64A aircraft (Figure 33). The MD 500 series aircraft has been used to develop FLIR, low light-level TV sensors, and multi-function display cockpit integration techniques such as demonstrated on the MD 530 MG and the MD 530 Night Fox. These systems have been flight tested and demonstrated to validate their value in expanding helicopter operational capability.

Both the Model 500 series systems demonstration efforts and the Apache AV05 flight controls experiments are all building a technology base to support an integrated cockpit for the advanced versions of the Apache. The current AH-64A pilot crew station (Figure 34) was designed during the mid-70's and represents a 1970's era level of system integration. The step beyond the AH-64A would be the AH-64B pilot crew station. Here extensive uses of flat

panel, multi-function displays, integrated crew stations, side-arm controllers, computer keyboard entry, touch screen technology and a full authority digital flight control system all dramatically improve the use of the cockpit real estate. In addition, these technologies supply to the pilot a greatly enhanced capability to perform the mission by dramatically reducing pilot workload.

An integral part of the crew station development will be the use of Artificial Intelligence (AI) techniques to augment the pilot. McDonnell Douglas Helicopter Company has been active over the last several years in developing the AI technology in its applications to some of the operational analysis efforts. Under recent AATD funding, McDonnell Douglas Helicopter Company has taken these AI techniques and applied them to maintenance diagnostics on the AH-64A helicopter (Figure 35). Under that program, McDonnell Douglas Helicopter Company developed an Intelligent Fault Locator (IFL) for four subsystems on board the Apache: the fuel system, communication/navigation avionics system, mechanical flight controls, and auxiliary propulsion unit (APU) systems. The knowledge base was created, the AI techniques developed, and all were integrated into a portable computer to be fielded with the maintenance personnel. The IFL is now on field evaluation with the Army at Ft. Rucker, Alabama and Ft. Hood, Texas. To date, it has a 100 percent success rate for fault location for fielded Apache aircraft. Also under contract to AATD, a flight data recorder effort has been initiated to monitor and record the aircraft health parameters. This flight data recorder data coupled with the AI maintenance diagnostic rules, will now allow onboard health monitoring as well as maintenance action.

Another application of AI techniques which has proved quite beneficial in developing aircraft system concepts is the development of the intelligent adversary for use in air-to-air combat (Figure 36). Using AI techniques, an intelligent adversary can be developed for each aircraft and allow these aircraft to fly against one another in a simulated air-to-air engagement. In this manner, real time evaluation of system capability and system improvements can be presented. To date, this intelligent adversary has been correlated with the data acquired by McDonnell Douglas Helicopter Company in the Army's Air Combat Test phase 3 at Patuxent River test station. During that test phase, an MD 530 aircraft was flown in a series of air-to-air engagements against adversary aircraft and engagement rules were developed. Again, this was a demonstration of a joint MDHC/Army program to evaluate the important airframe parameters influencing air-to-air combat success. This program is now being carried forward by the Army and McDonnell Douglas Helicopter Company into ACT IV with the involvement of the AH-64 in an air-to-air evaluation.

This jointly funded AATD/MDHC effort, is aimed at evaluating the impact of off-axis firing and sophisticated fire control systems in air-to-air combat success.

SIMULATION

As revolutionary as the impact of avionics on helicopter systems, the use of man-in-the-loop simulation to design the current generation of helicopters has undertaken a major role. McDonnell Douglas Helicopter Company has built a modern rotorcraft simulation facility within its current Mesa, Arizona plant (Figure 37). This simulation facility is integrated in with the laboratory and flight test environment and adjacent to a major DoD range and field training resource. This total integration of simulation, flight test and training provides an optimum use of the simulation results. As part of the simulation facility, three 20-foot diameter domes are being installed to provide cockpit and systems development capability. General Electric CompuScene IV digital visual displays have been installed in these domes. This simulation capability has been used to support the full range of engineering services (Figure 38). Crew station arrangements, avionics system developments, and advanced side-arm controllers (coupled with visionics and sensors) have been integrated and evaluated in the simulation capability. This simulation capability has also been used in support of flight test in diagnosing aircraft performance problems.

RESEARCH AND DEVELOPMENT FACILITIES

All of these major thrusts are dependent upon an increase in the research and development facilities currently used by the helicopter industry (Figure 39). McDonnell Douglas Helicopter Company has made a commitment to those advance facilities in the development of its current Advanced Development Center (ADC) in Mesa, Arizona. The 345,000 square feet ADC houses the most modern laboratories (Figure 40) including the flight simulation laboratories, materials and process laboratories, mission equipment development laboratories, structures laboratories, composite material fabrication laboratories as well as the prototype development area. Also as a part of the Advanced Development Center is a model rotor whirl tower and a propulsion integration test cell. A small laboratory wind tunnel to be used in the development of preliminary designs and concepts is also part of the laboratory capability. The ADC has over seven acres under one roof to provide the integrated experimental facilities needed to develop the next generation of rotorcraft.

SUMMARY

All of these major thrusts come together to support the next generation of helicopter programs extending beyond the capability of the current AH-64, the most modern helicopter in the Army inventory (Figure 41). We see these thrusts coming to maturity on the LHX program and Advanced Apaches. The LHX with its requirement for low weight and high performance, drives the industry into the area of advanced structures, improved rotor concepts and advanced cockpit designs. The technology programs of the 1970's and 1980's coupled with the continuing partnership of industry and government that we have highlighted will ensure the success of these future programs.

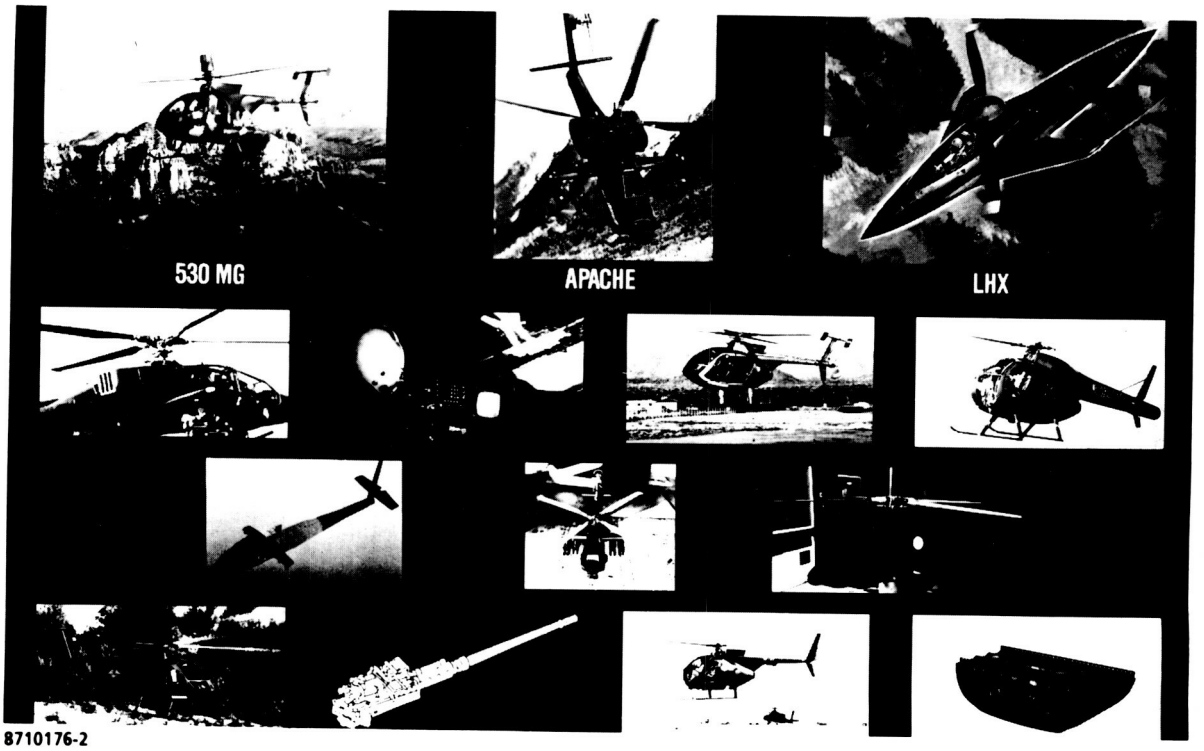

Figure 1. Technology Advances on a Broad Front

- ADVANCED CONCEPTS
- ANALYSIS TECHNIQUES
- STRUCTURES
- SYSTEMS
- SIMULATION
- R&D FACILITIES

Figure 2. Major Technology Thrusts

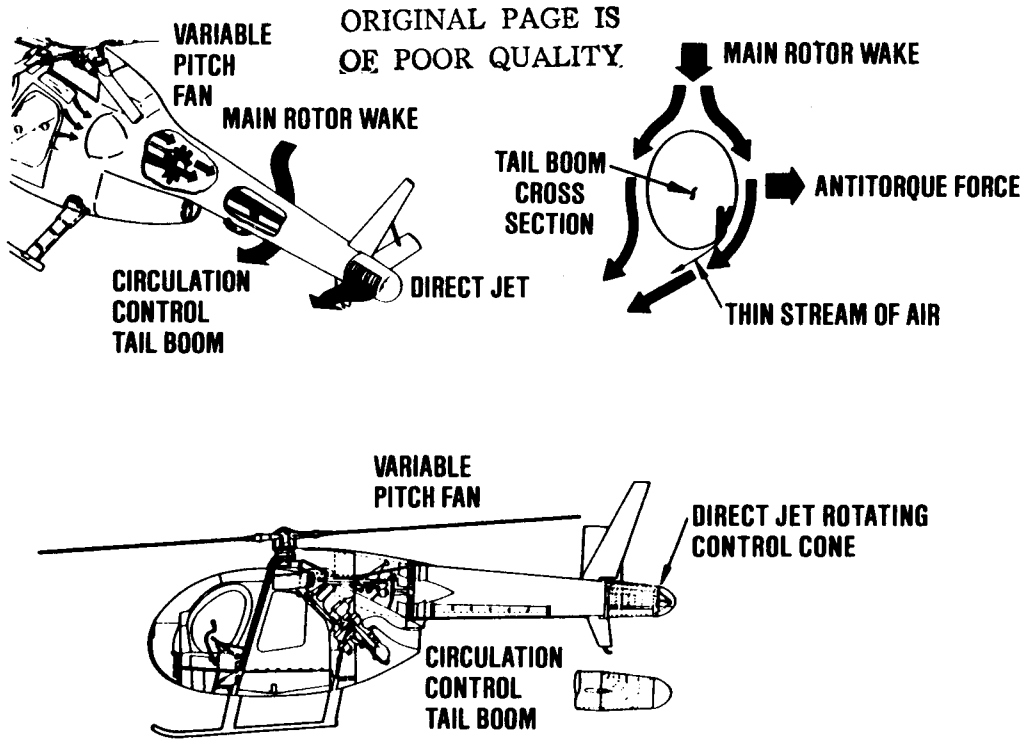

8710176-5

Figure 3. NOTAR (No Tail Rotor) Concept

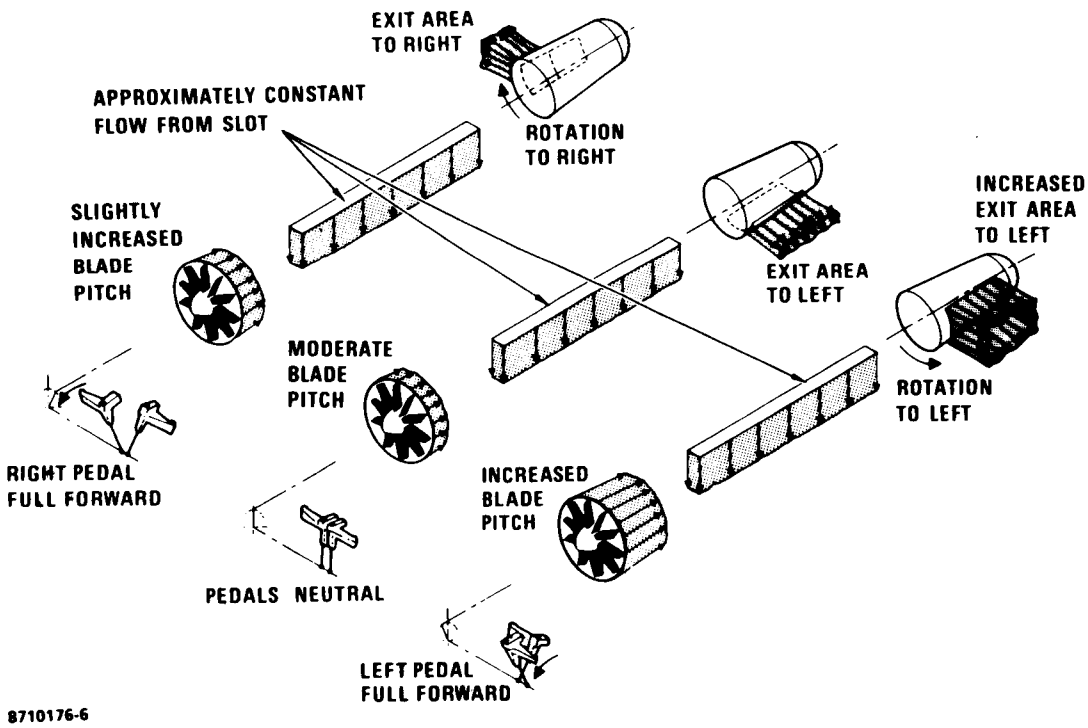

8710176-6

Figure 4. NOTAR System Function

AUG 1976 — BASIC DATA GENERATION — MDHC WHIRL TOWER
- DEC 1977 — FIRST CONCEPTUAL FLIGHT
- APR 1980 — NOTAR PATENT ISSUED
- SEP 1981 — GROUND TESTS — FAN/THRUSTER/THRUSTER TRANSIENT RESPONSE

DEC 1981 — FIRST TOTAL SYSTEM FLIGHT, OH-6A
- SEP 1982 — SIMULATION — FLIGHT SIMULATION ON FLIGHT SIMULATOR FOR ADVANCED AIRCRAFT AT AMES

MAY 1983 — GOVERNMENT PILOT EVALUATION
- MAY 1983 — USAAVRADCOM TECHNICAL REPORT
- DEC 1983 — AERODYNAMIC PANEL MODELS
- FEB 1984 — TIEDOWN TESTS — AIRCRAFT ON TOWER TO SIMULATE OUT OF GROUND EFFECT HOVER
- AUG 1984 — NEW FAN DESIGNED, INLET MODS
- SEP 1985 — FAN/STATOR GROUND TESTS

OCT 1985 — WATER TANK TESTING
- OCT 1985 — WIND TUNNEL TESTS
- DEC 1985 — GROUND TEST WITH NEW FAN/INLET AND MORE POWERFUL ENGINE

MAR 1986 — SECOND SLOT FLIGHT TEST

8710176-7

Figure 5. NOTAR Test/Analyses History

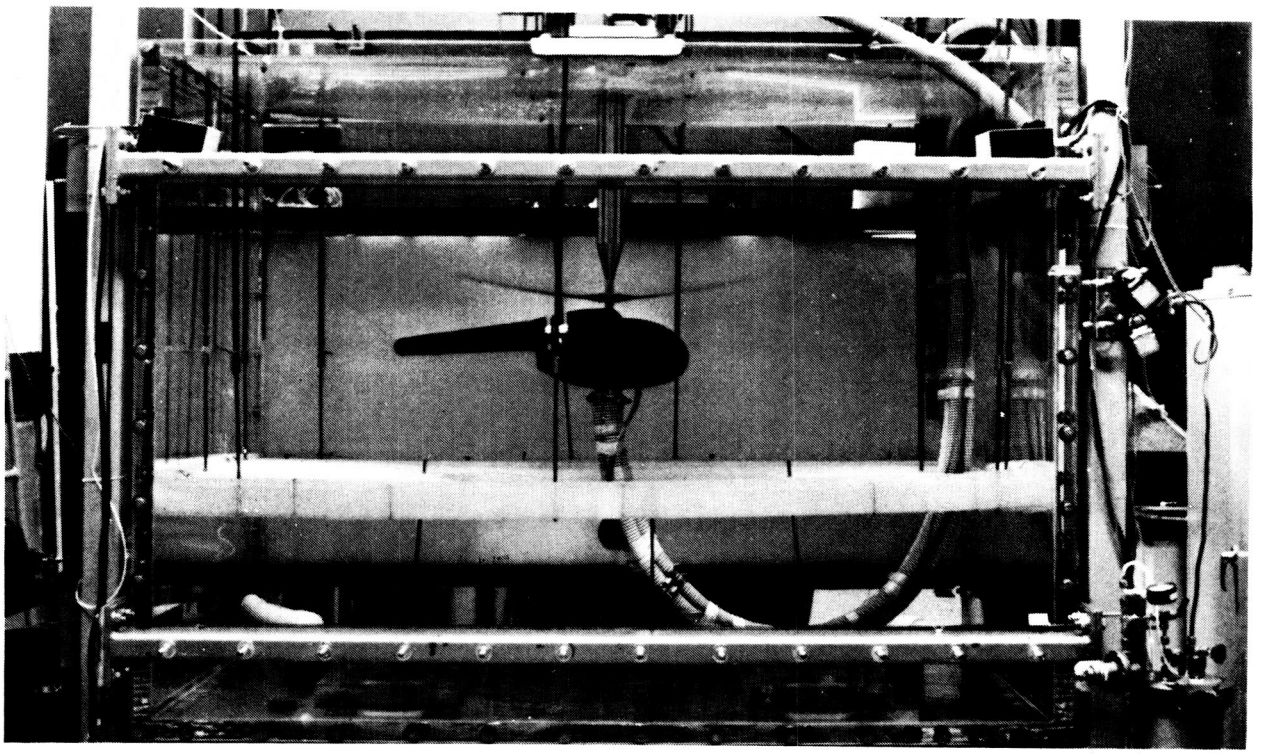

Figure 6. MDRL Hover Test Facility

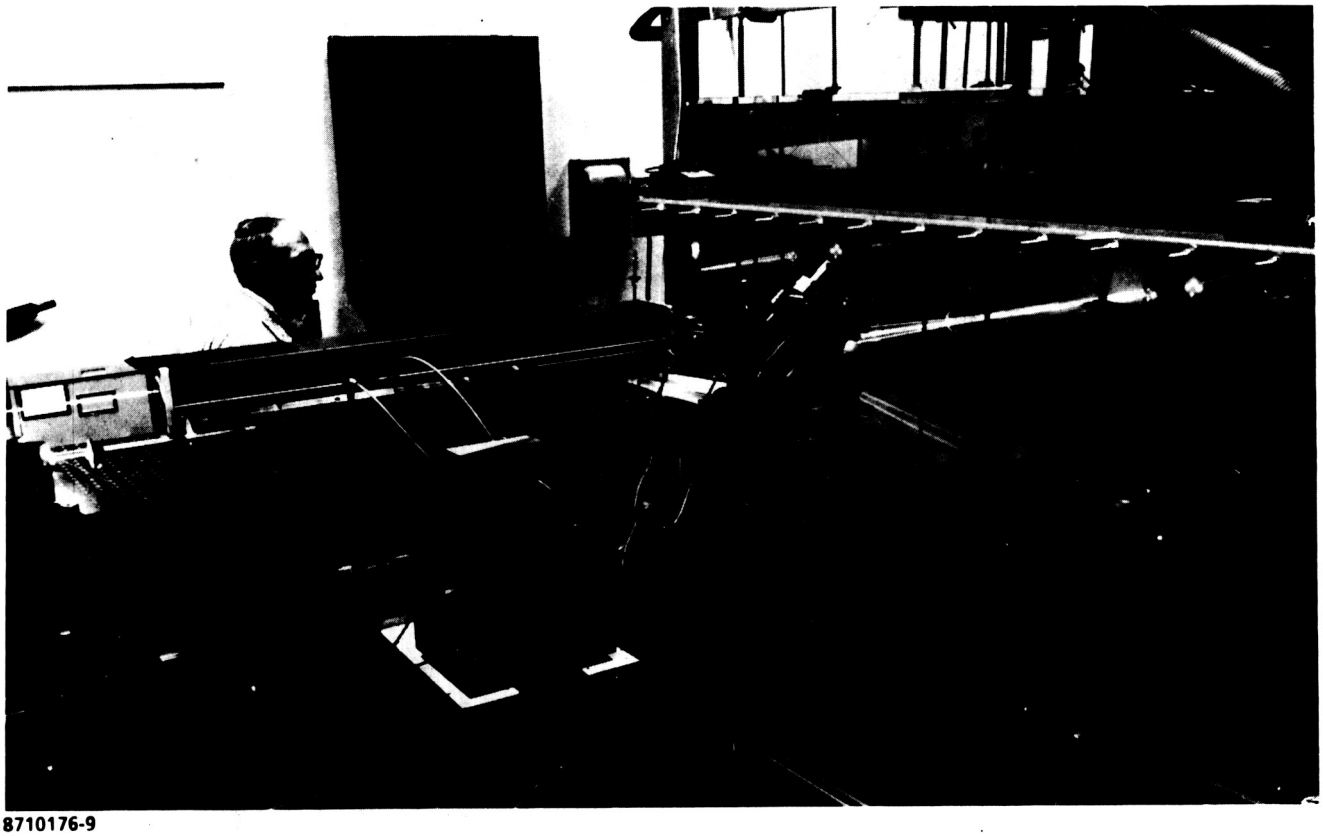

8710176-9

Figure 7. Laser Doppler Velocimeter Measurements in Hover Test Facility

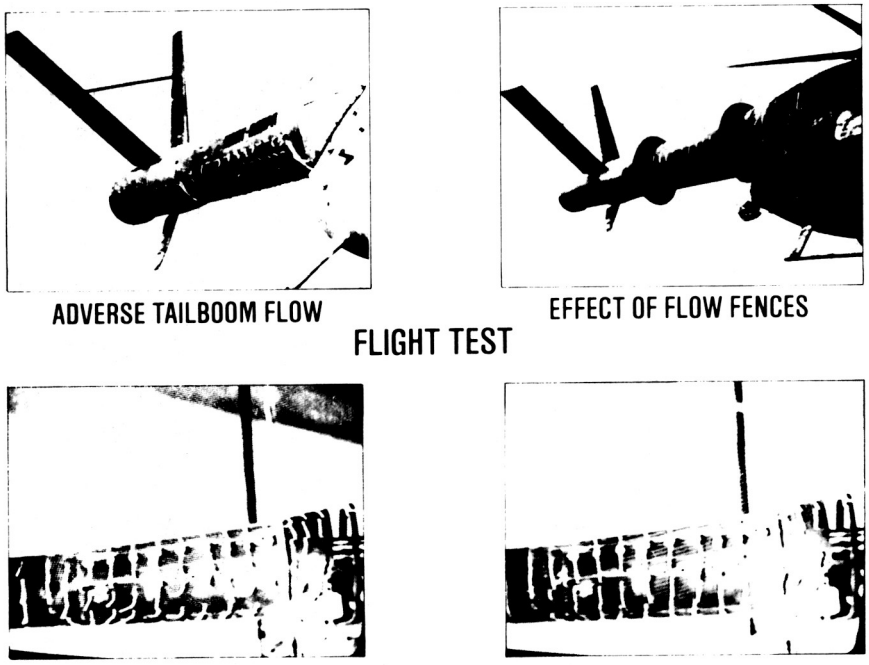

8710176-10

Figure 8. NOTAR Tests

8710176-11

Figure 9. First Flight of Improved NOTAR

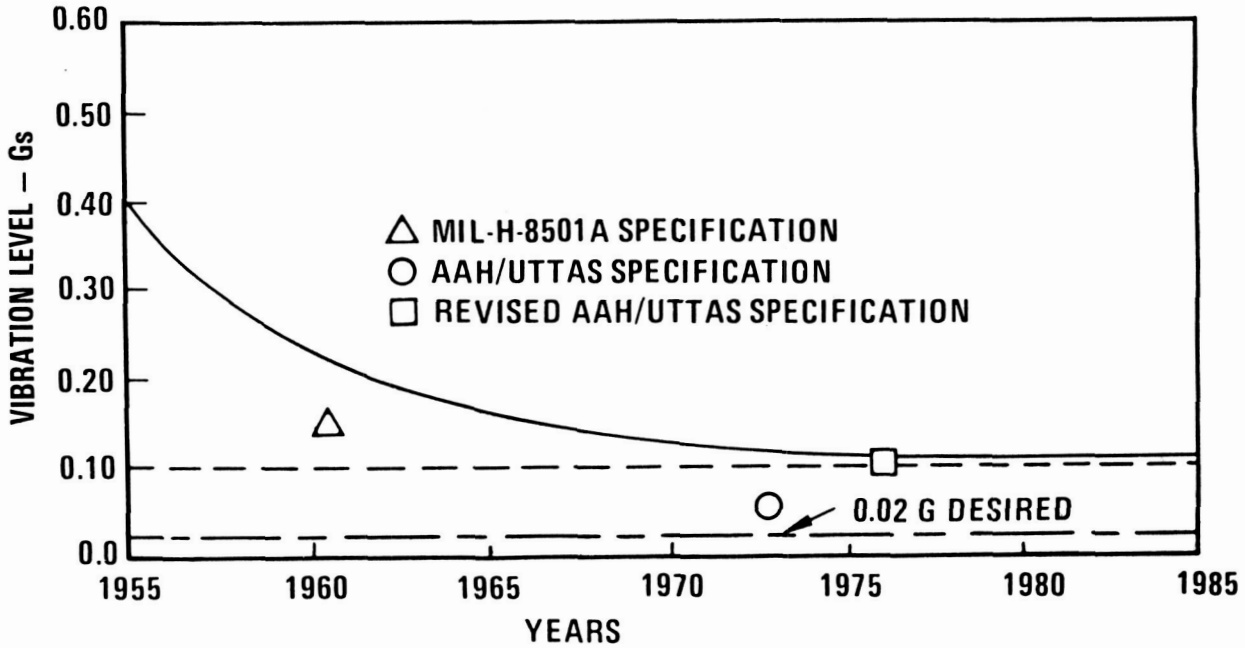

8710176-12

Figure 10. Why Higher Harmonic Control?

ORIGINAL PAGE IS
OF POOR QUALITY

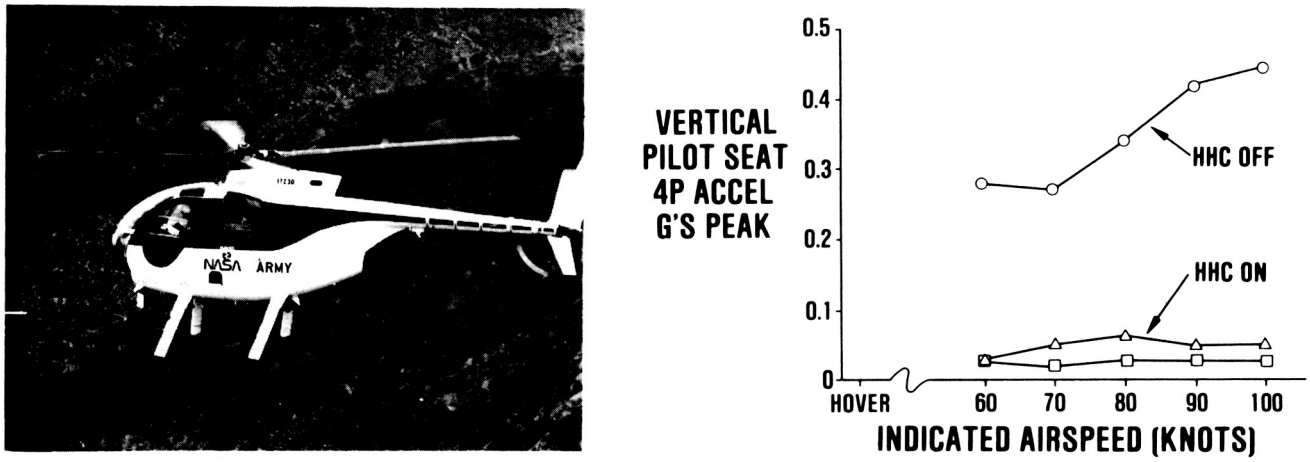

Figure 11. Higher Harmonic Control

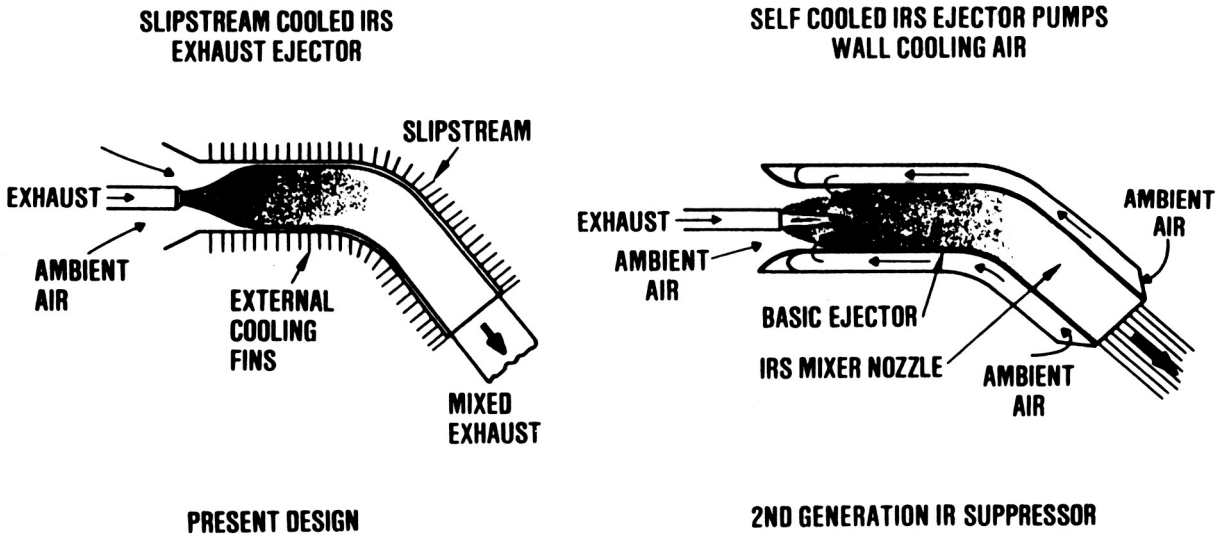

8710176-14

Figure 12. Engine Exhaust IR Suppressor

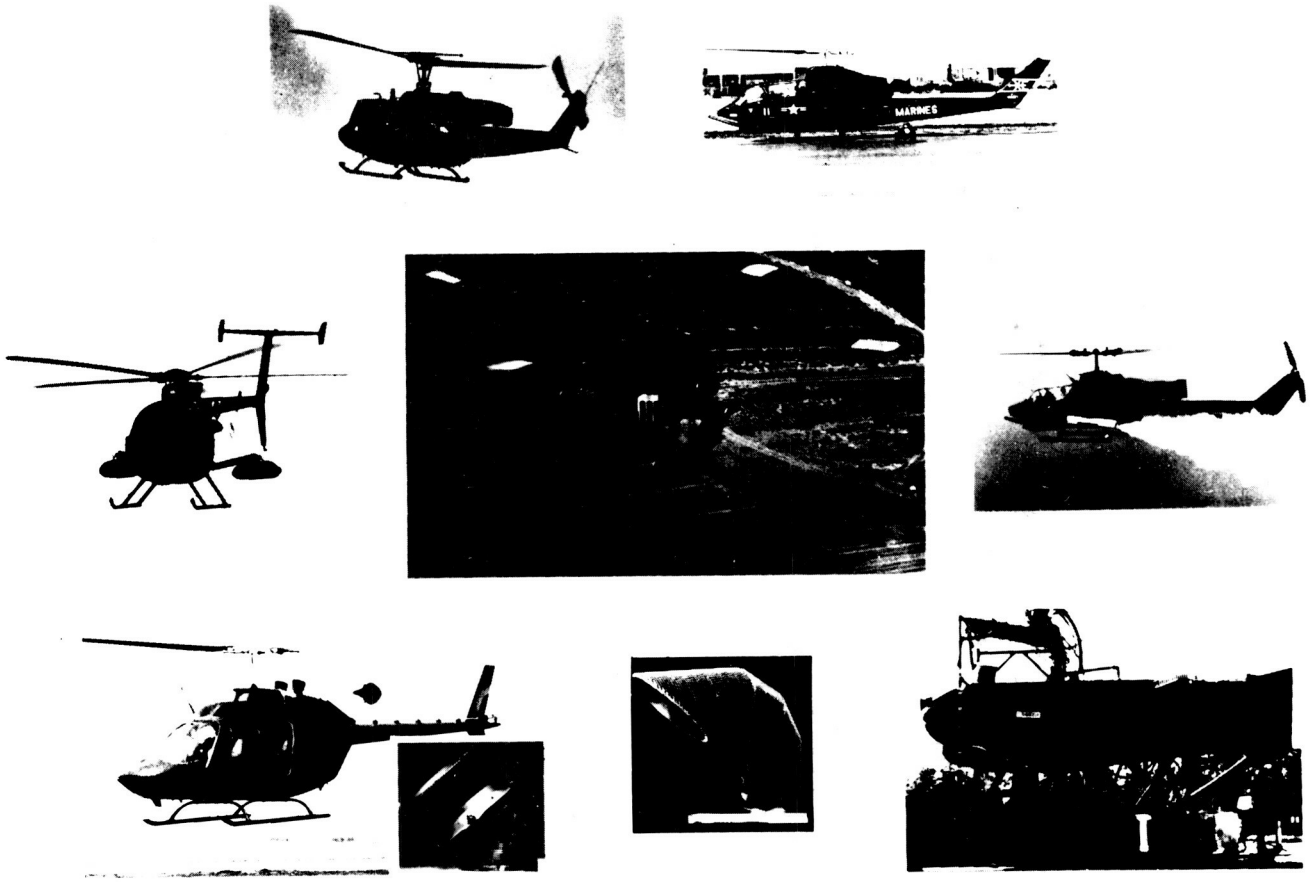

8710176-15

Figure 13. IR Suppressor History

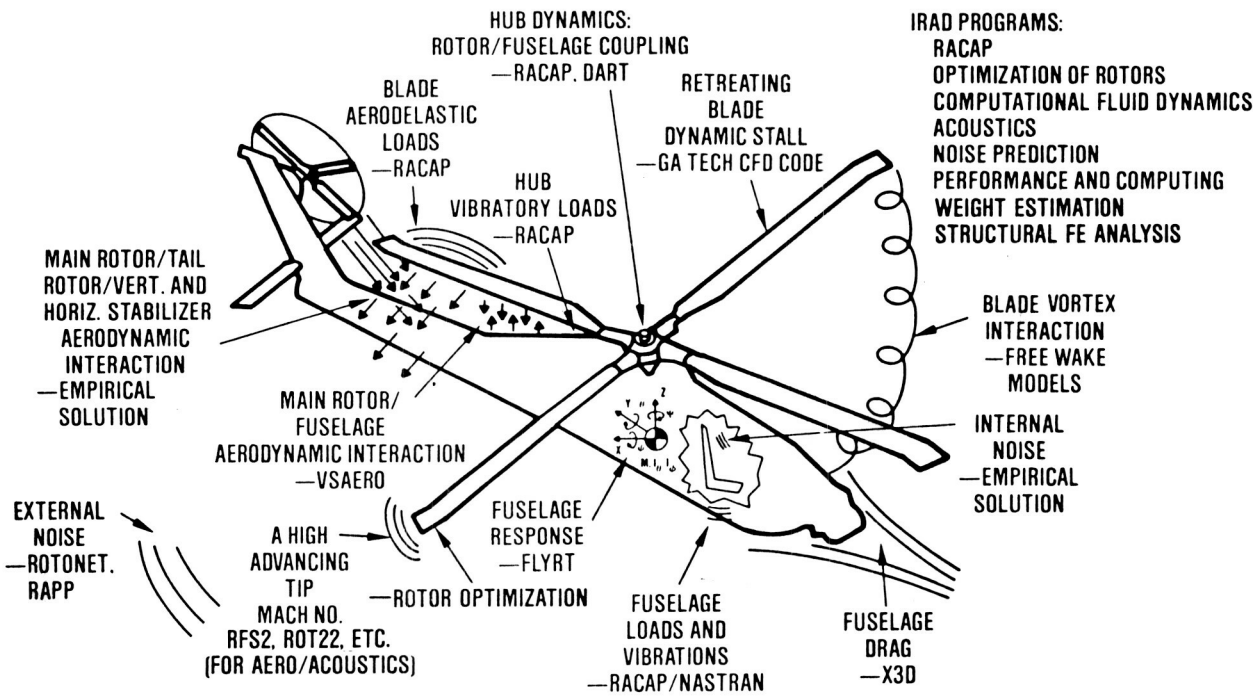

8710176-17

Figure 14. Analysis Techniques

ORIGINAL PAGE IS
OF POOR QUALITY

NORMAL FORCE CO-EFFICIENT (C_N) COMPARISON BETWEEN FLIGHT TEST AND ANALYTICAL PREDICTIONS

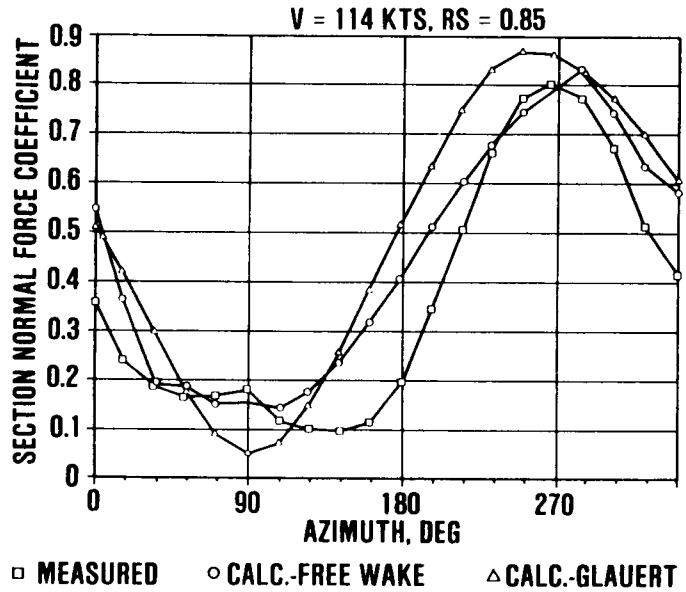

8710176-18

Figure 15. Analysis Techniques - Rotor Airframe Comprehensive Aeroelastic Program (RACAP)

AH-1G AT 114 KTS FLAP BENDING MOMENT VS AZIMUTH

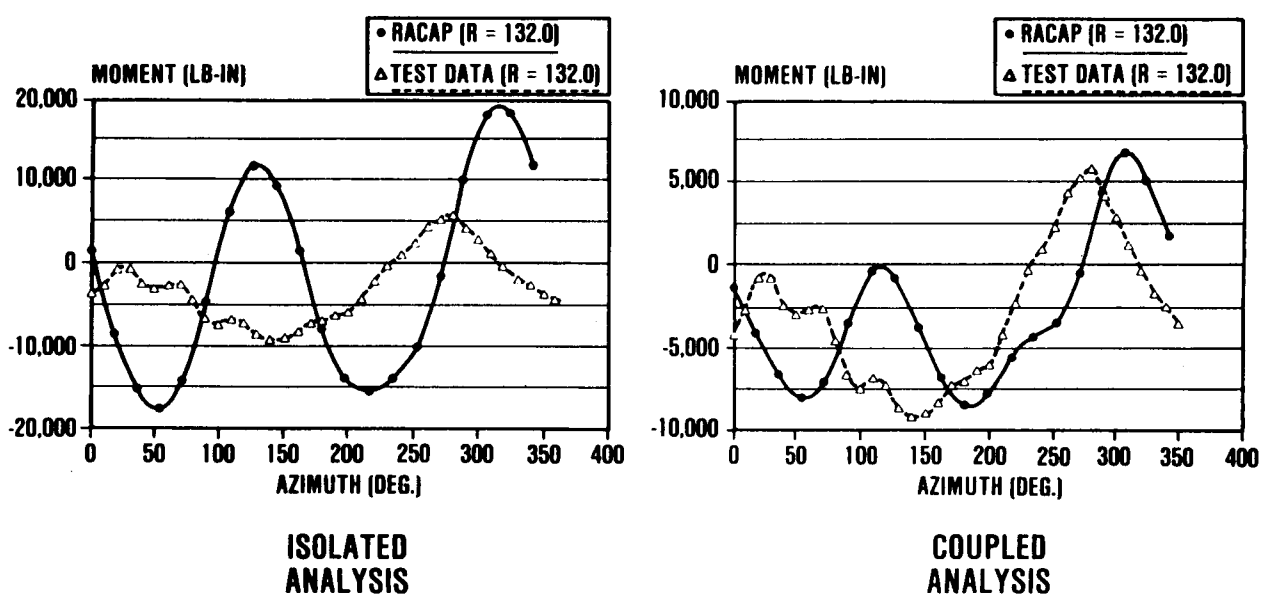

Figure 16. Analysis Techniques - Rotor Airframe Comprehensive Aeroelastic Program (RACAP)

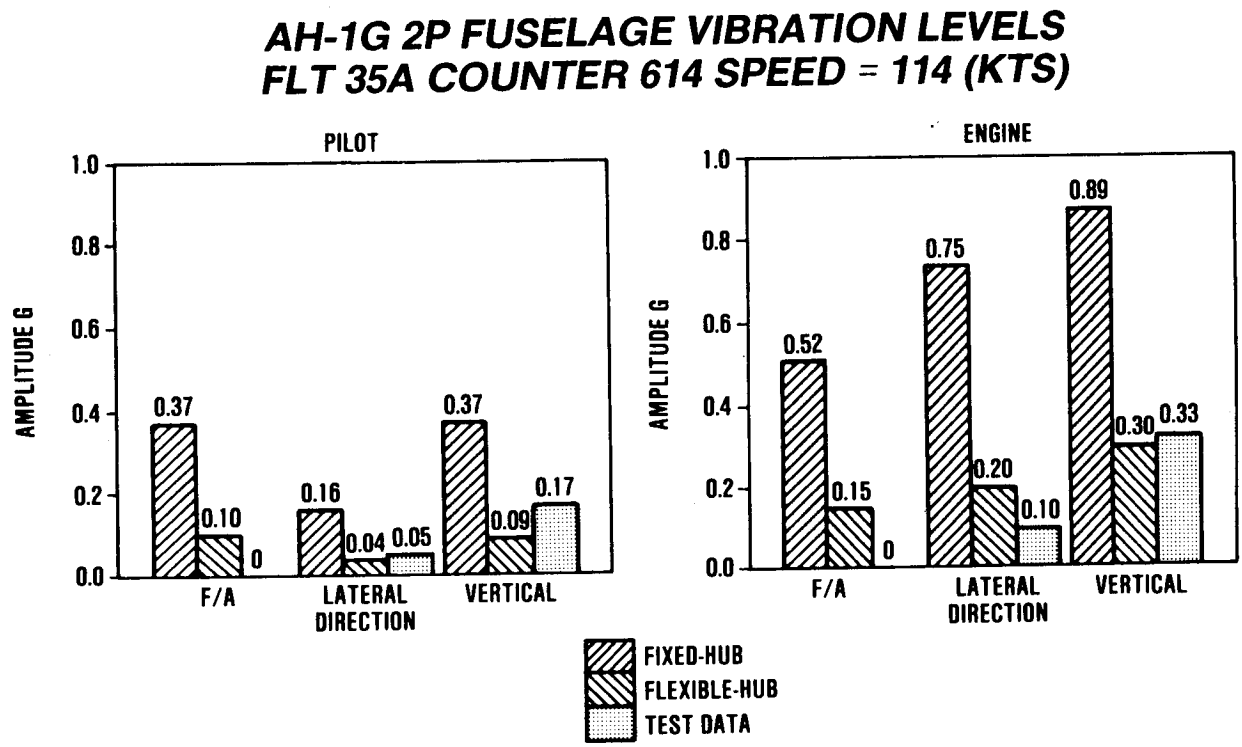

8710176-20

Figure 17. Analysis Techniques - Rotor Airframe Comprehensive Aeroelastic Program (RACAP)

PURPOSE: SIMULTANEOUSLY VARY DESIGN PARAMETERS TO ACHIEVE AN "OPTIMUM" DESIGN

APPROACH: MATHEMATICAL PROGRAMMING APPROACH

MINIMIZE $J(\bar{D})$

SUBJECT TO $g_q(\bar{D}) \leq 0 \quad , \; q = 1, 2, \ldots Q$

$D_i^L \leq D_i \leq D_i^{(u)} \quad , \; i = 1, 2, \ldots N_{DV}$

ADVANTAGE: ACHIEVE "OPTIMUM" PERFORMANCE

OBTAIN DESIGN IN A FRACTION OF THE TIME NEEDED FOR PARAMETRIC STUDIES

8710176-21

Figure 18. Optimization Analysis

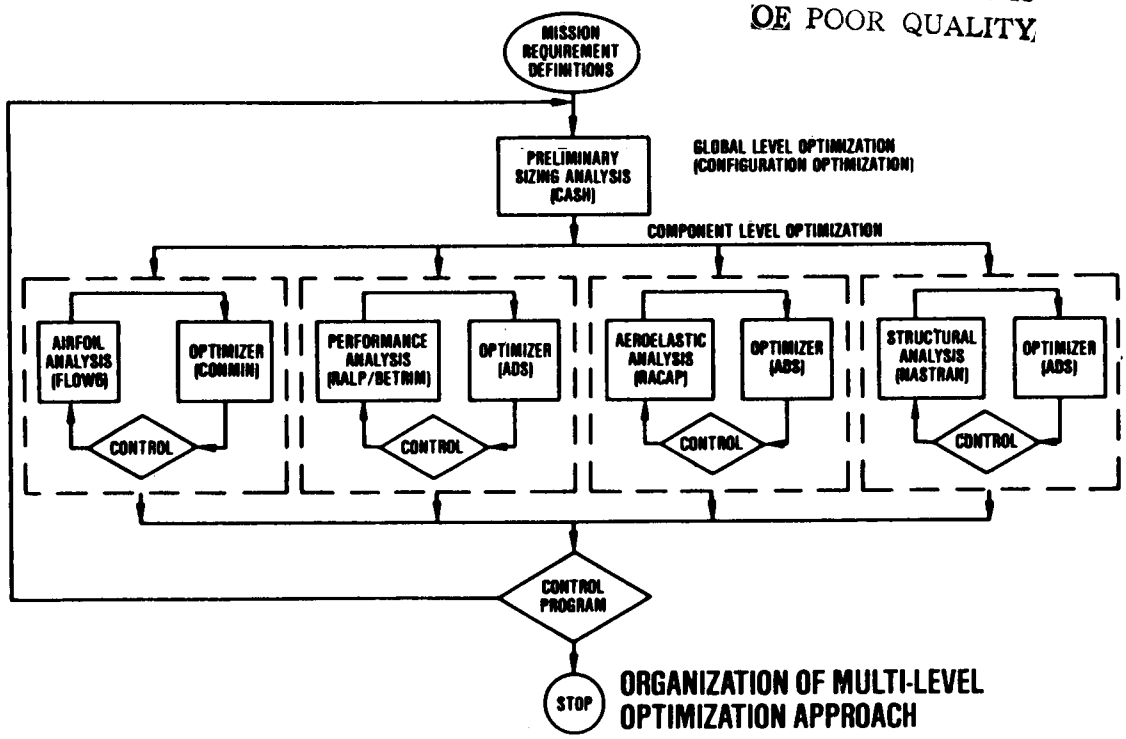

ORGANIZATION OF MULTI-LEVEL OPTIMIZATION APPROACH

8710176-22

Figure 19. Optimization Analysis Approach

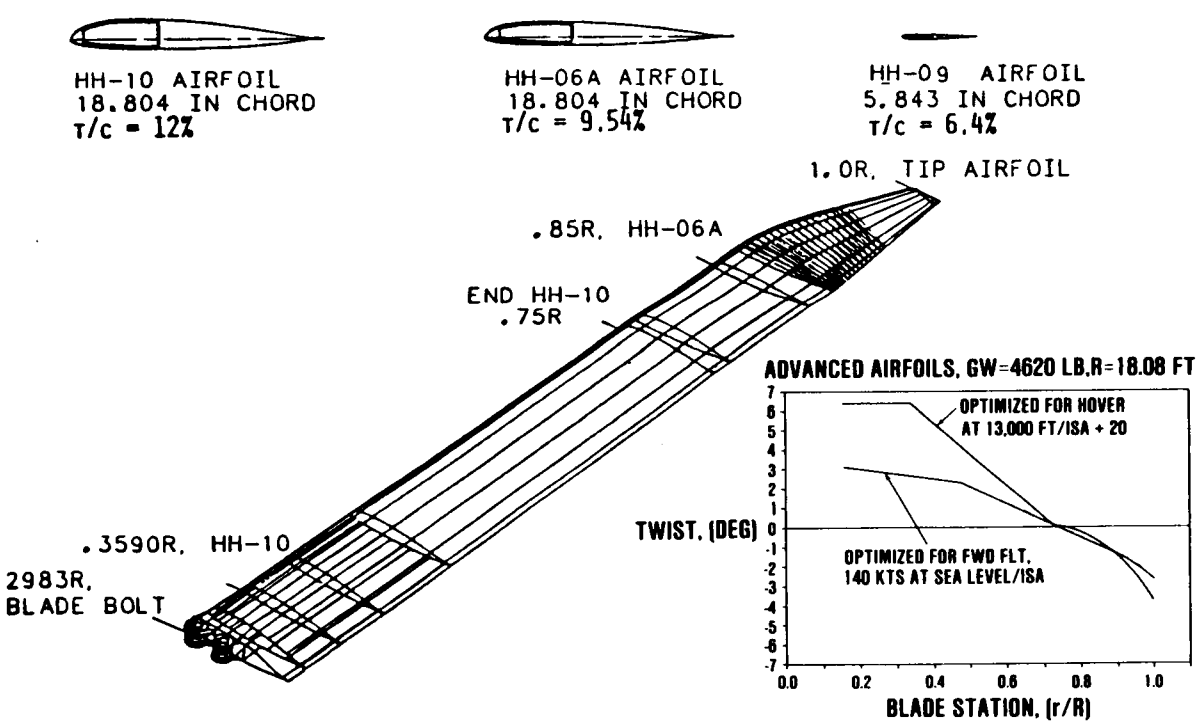

8710176-23

Figure 20. Optimized Blade Section

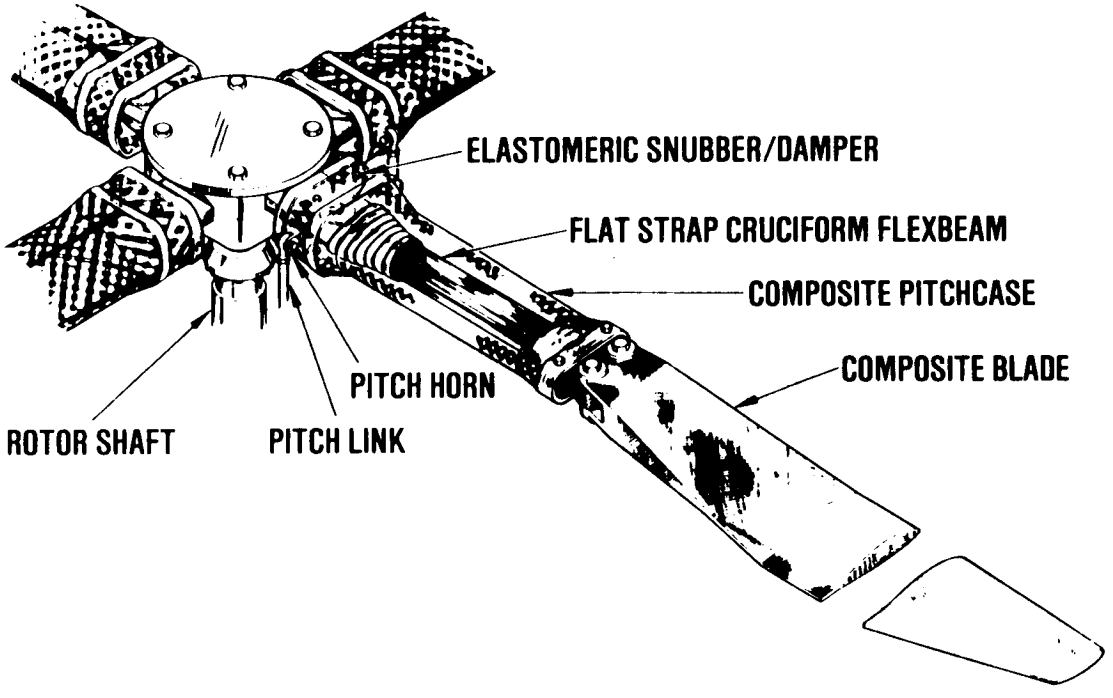

8710176-25

Figure 21. MDHC Advanced Rotor (HARP)

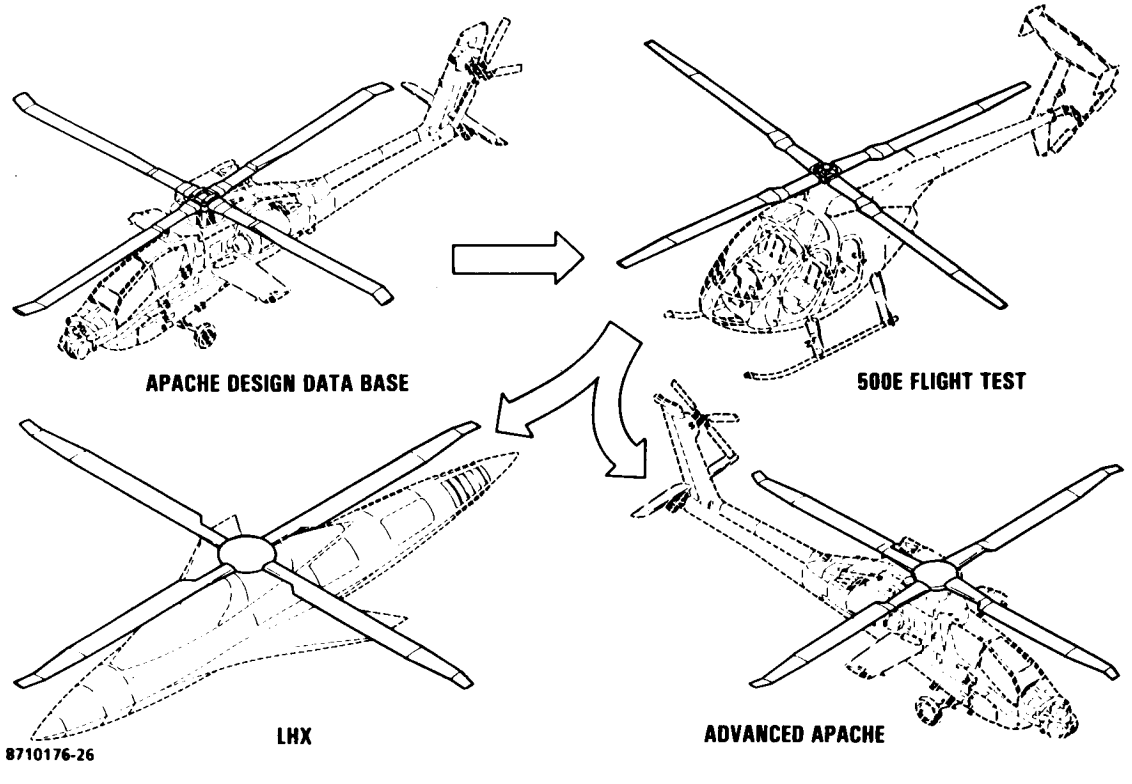

Figure 22. HARP Program Concept

8710176-27

Figure 23. HARP First Flight

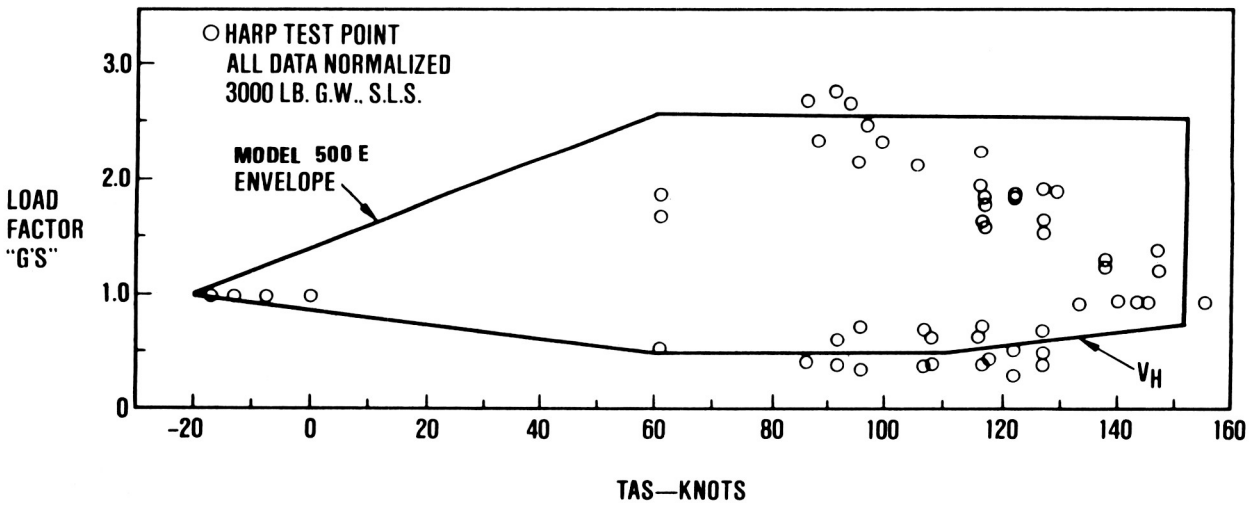

8710176-28

Figure 24. HARP Demonstrated V-N Envelope

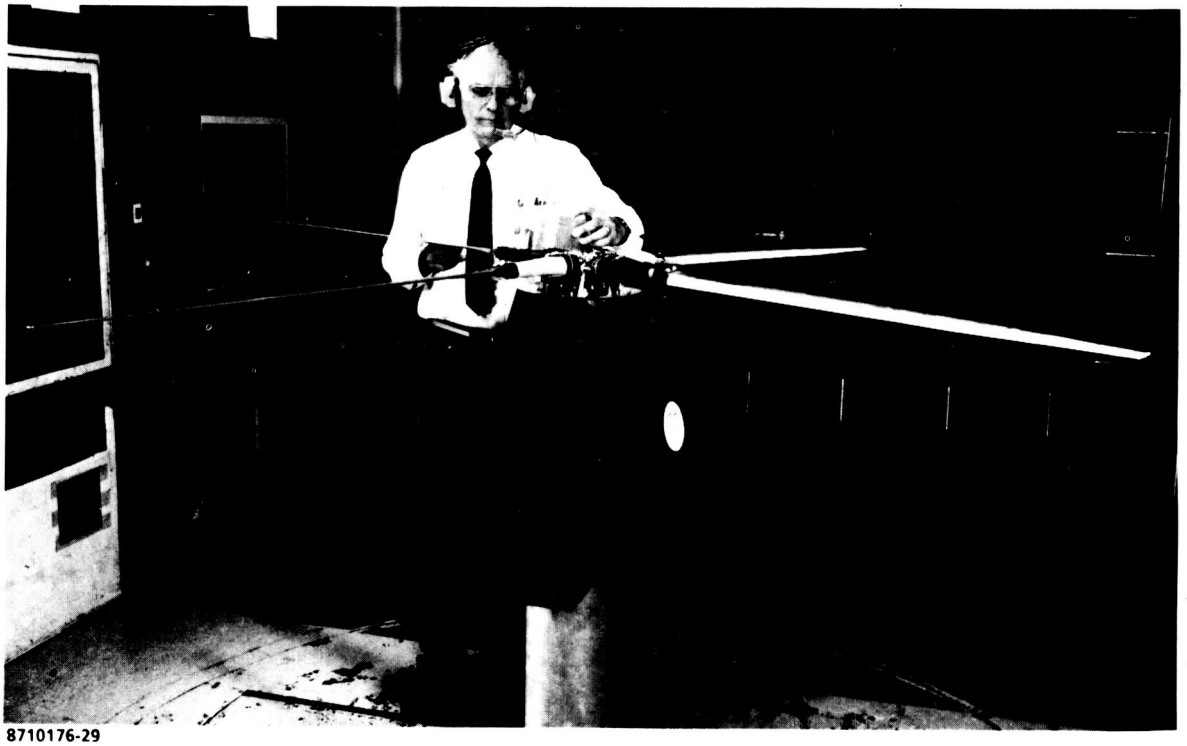

8710176-29

Figure 25. Model Rotor in McAir Wind Tunnel

CONTRACT NO. DAAJ02-85-C-0037

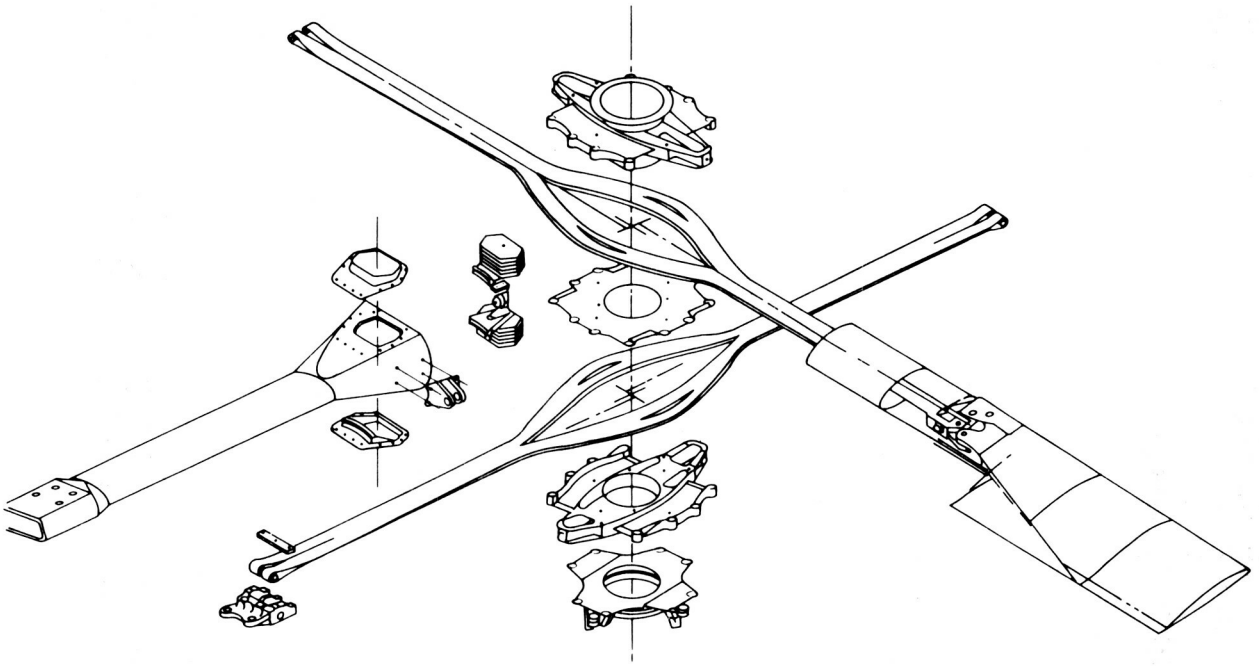

8710176-30

Figure 26. AH-64 Advanced Composite Hub (ACH Prototype Hub)

ORIGINAL PAGE IS
OF POOR QUALITY

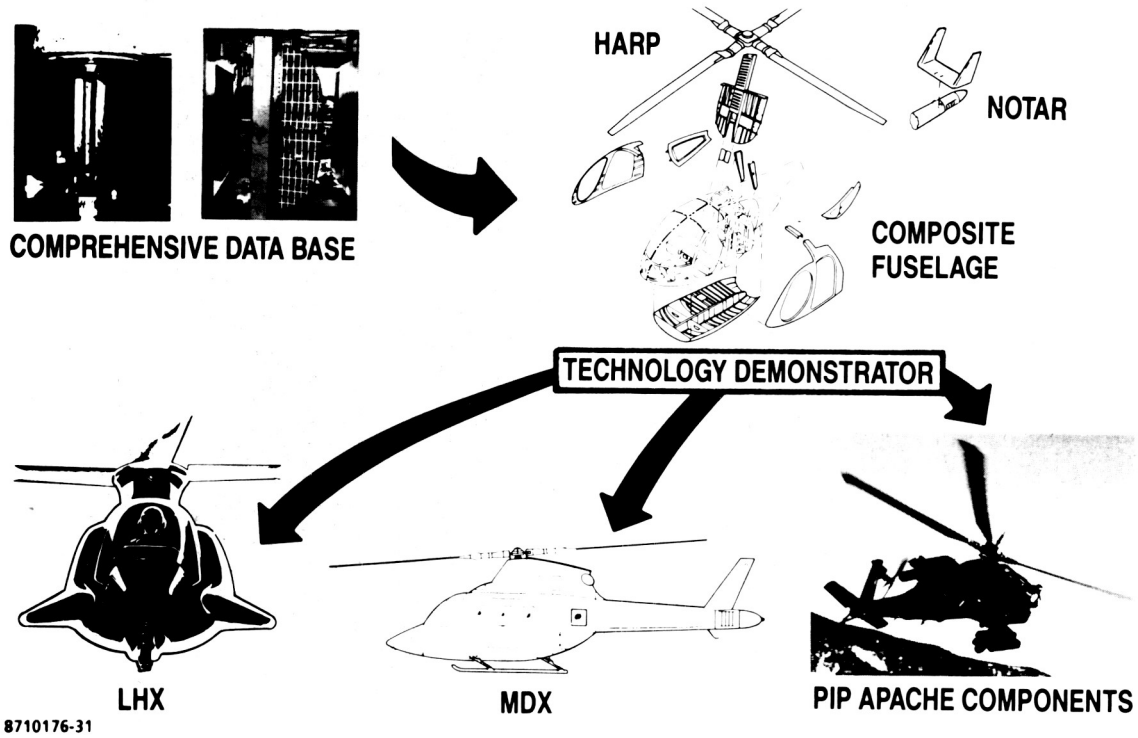

Figure 27. Flightworthy Composite Fuselage Program Concept

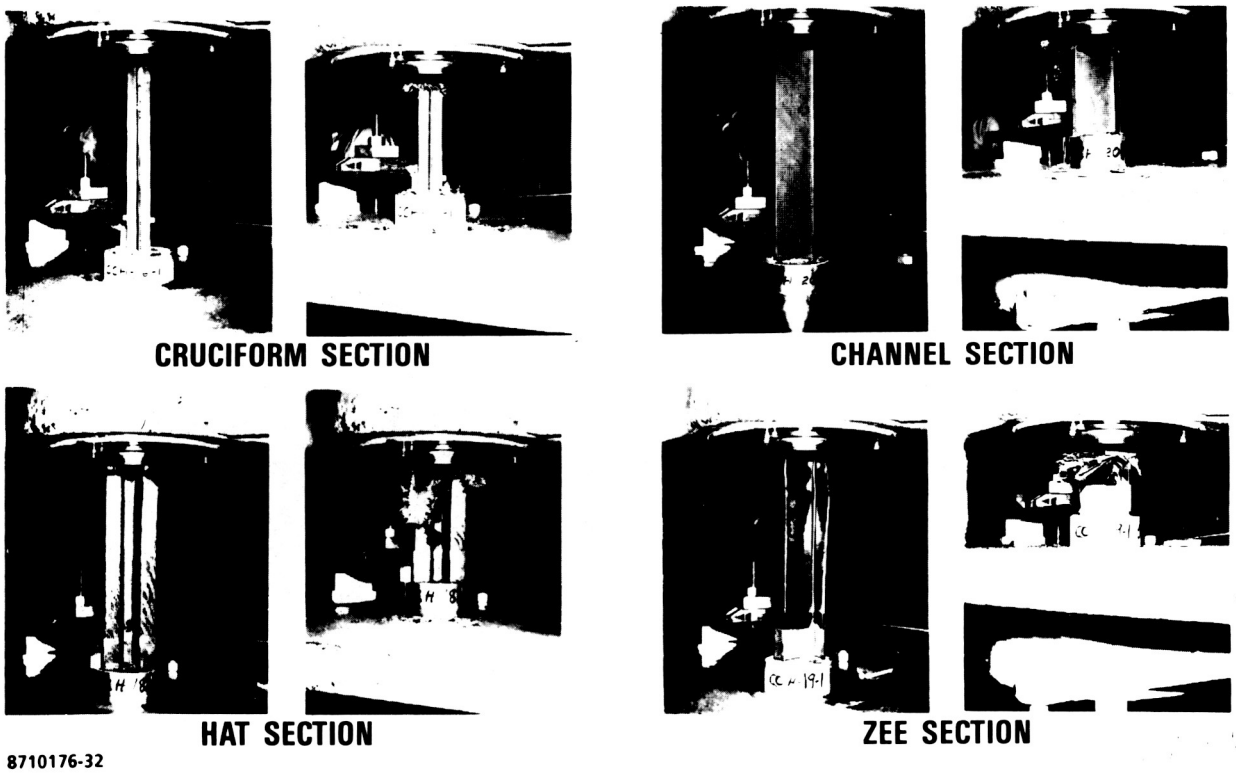

Figure 28. Bulkhead Tunnel Beams

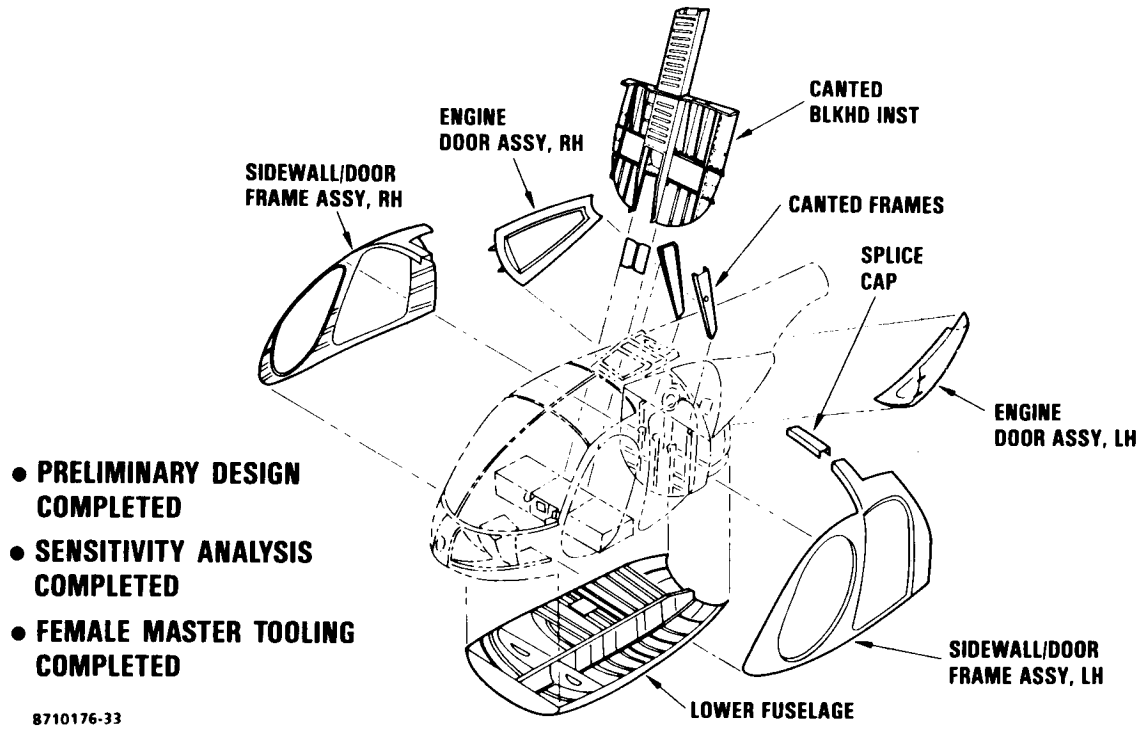

Figure 29. Full Fuselage

- **PARTS COUNT REDUCED FROM 33 TO 13**
- **LABOR HOURS REDUCED 30%**

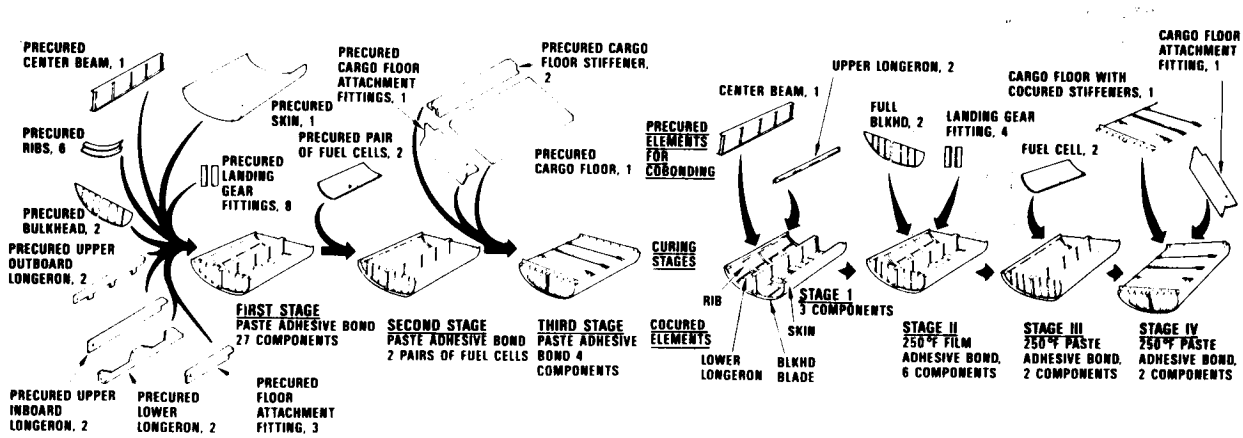

Figure 30. Improved Tooling Approach

ORIGINAL PAGE IS
OF POOR QUALITY

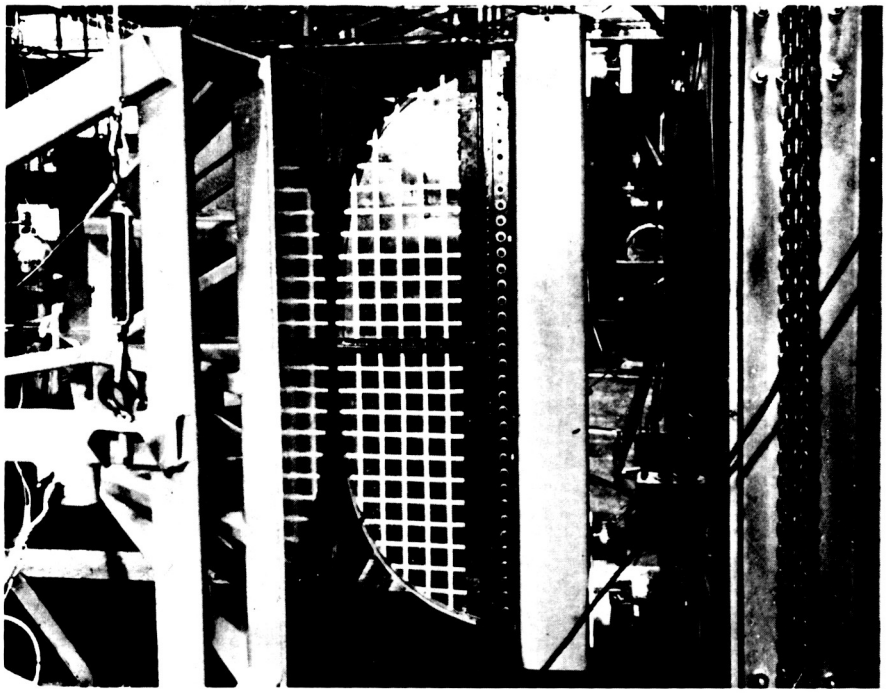

8710176-35

Figure 31. Third 25-Inch Subassembly Impact Test Set-Up

8710176-37

Figure 32. Advanced Digital Flight Control System
AV05 First Flight

Figure 33. Light Helicopter Systems Integration

8710176-39

Figure 34. AH-64A Pilot Crewstation

8710176-40

Figure 35. Intelligent Fault Locator Using
Artificial Intelligence

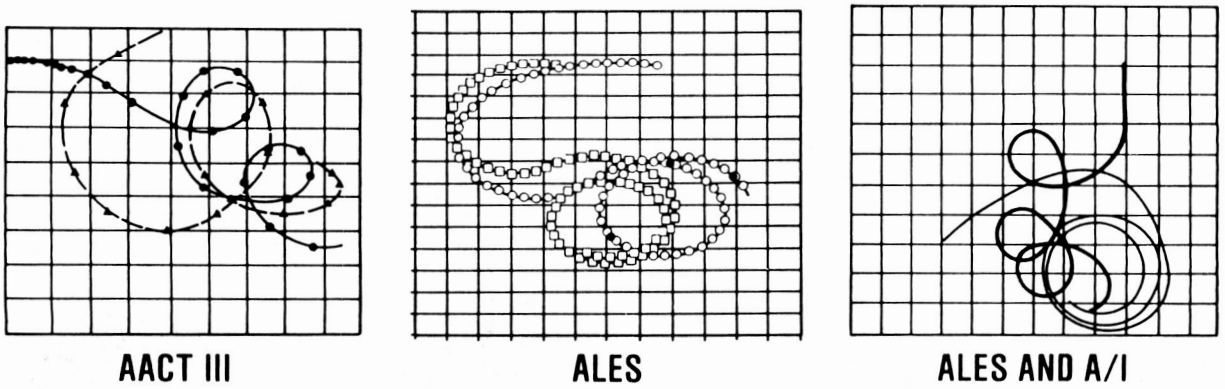

Figure 36. Mission Analysis, Air-To-Air
Ground Traces Of A Maneuver

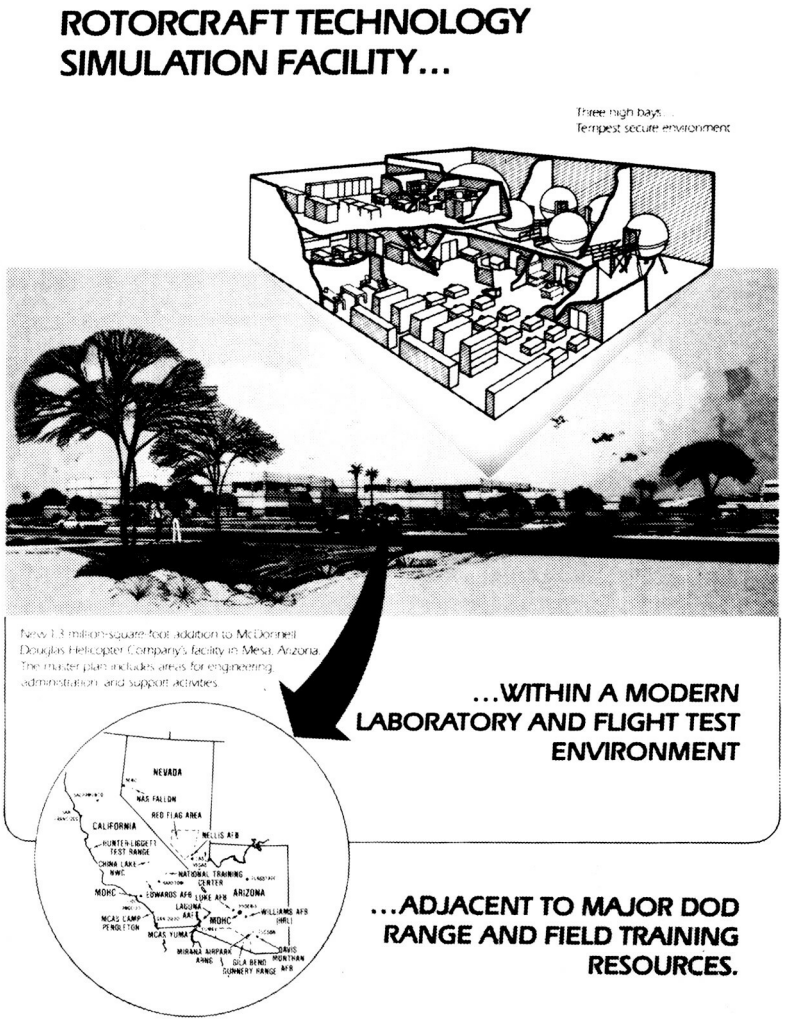

Figure 37. Simulation

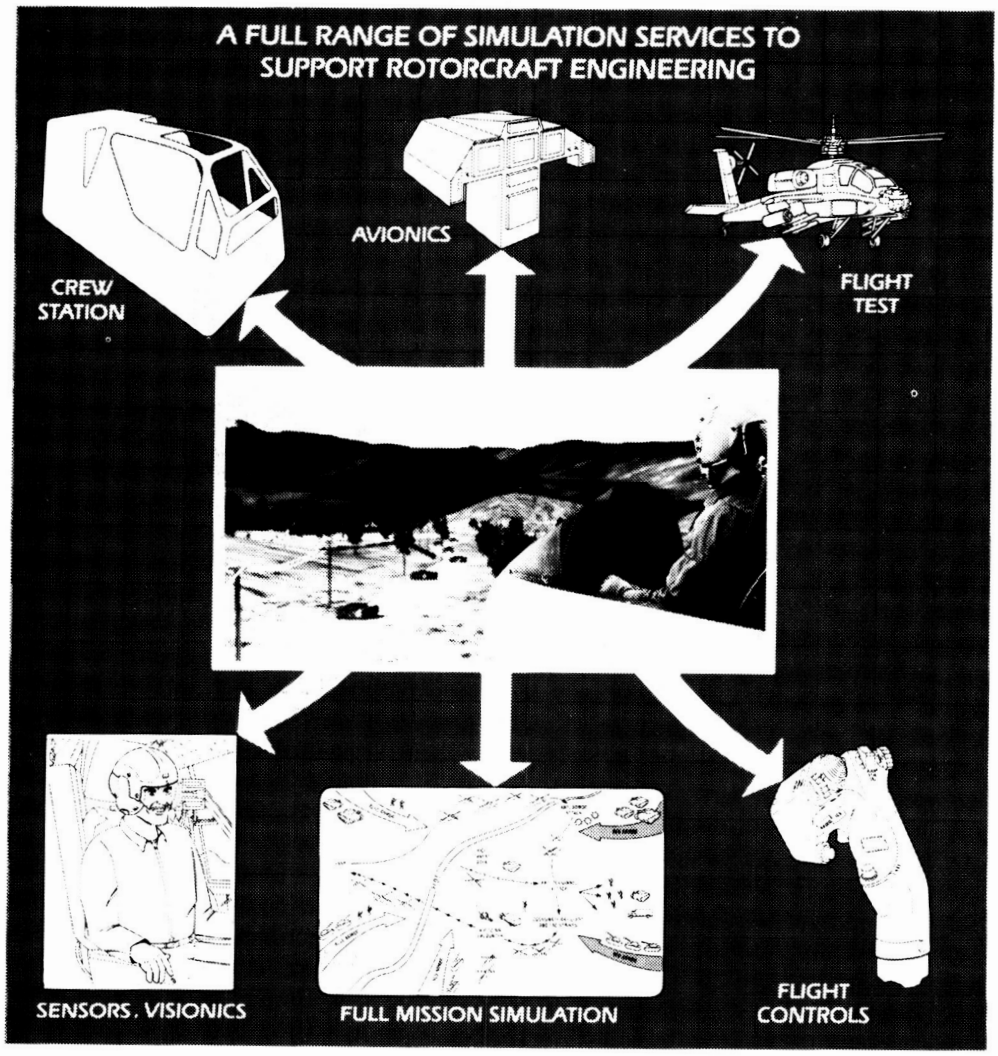

Figure 38. Simulation

Figure 39. Mesa Facilities Overview

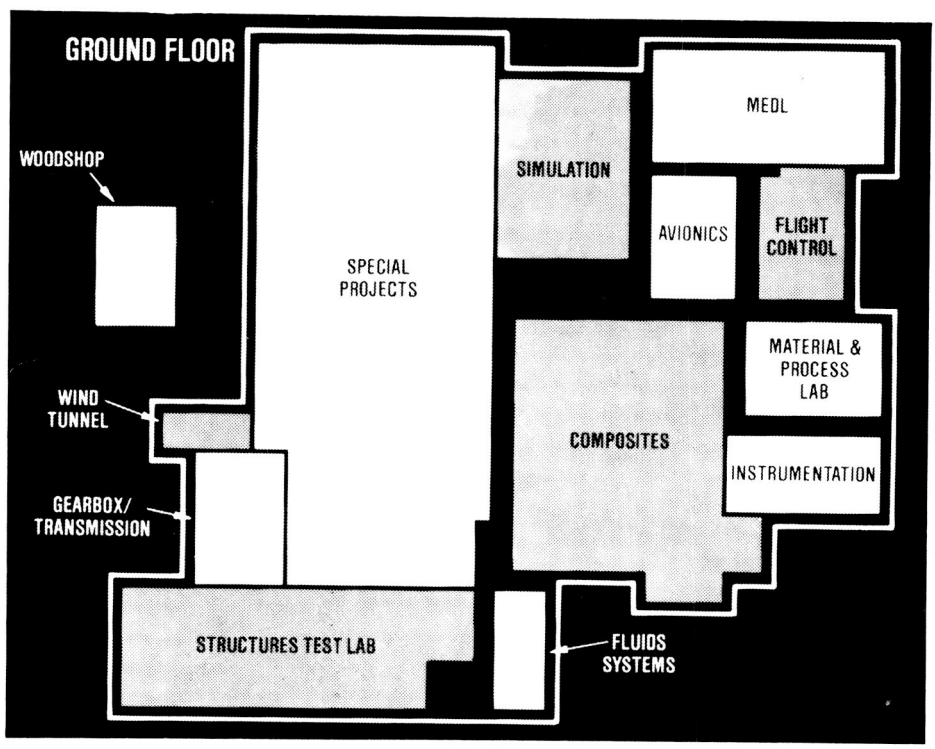

Figure 40. Advanced Development Center

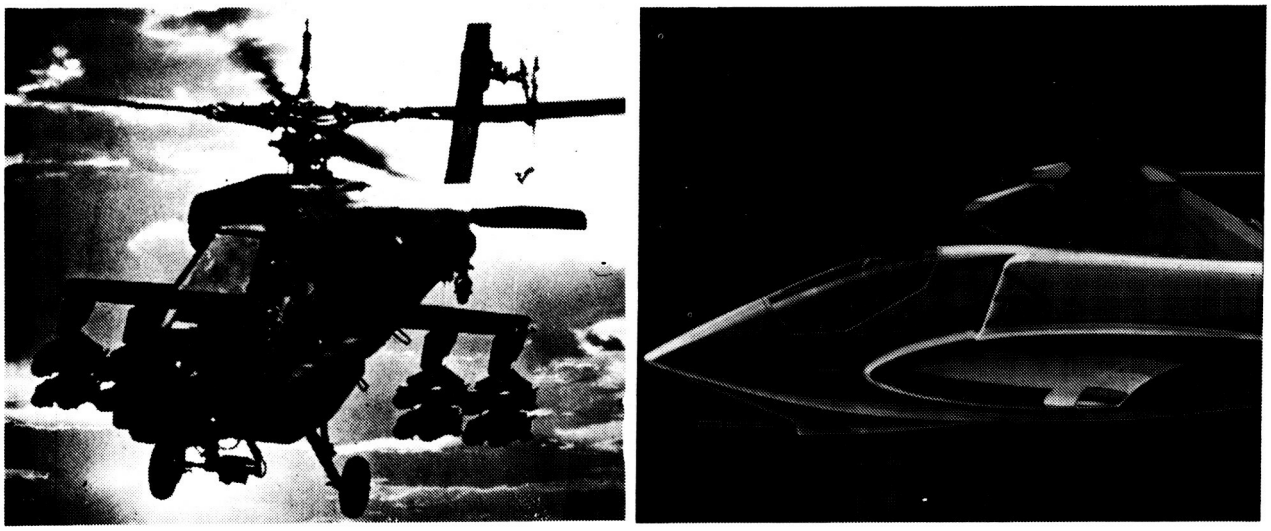

Figure 41. Beyond Apache