NASA
Contractor Report 4155

AVSCOM
Technical Report 88-C-009

NASA-CR-4155 AVSCOM-
TR-88-C-009
N88-26591

Design, Manufacture, and Spin Test of High Contact Ratio Helicopter Transmission Utilizing Self-Aligning Bearingless Planetary (SABP)

Dezi Folenta and William Lebo

LIBRARY COPY

LANGLEY RESEARCH CENTER
LIBRARY, NASA
HAMPTON, VIRGINIA

CONTRACT NAS3-24539
JUNE 1988

NF01825

US ARMY
AVIATION
SYSTEMS COMMAND
AVIATION R&T ACTIVITY

NASA
Contractor Report 4155

AVSCOM
Technical Report 88-C-009

Design, Manufacture, and Spin Test of High Contact Ratio Helicopter Transmission Utilizing Self-Aligning Bearingless Planetary (SABP)

Dezi Folenta and William Lebo
Transmission Technology Co., Inc.
Fairfield, New Jersey

Prepared for
Propulsion Directorate
USAARTA-AVSCOM and
NASA Lewis Research Center
under Contract NAS3-24539

National Aeronautics
and Space Administration

Scientific and Technical
Information Division

1988

PROJECT SUMMARY

The objective of the subject program as performed by Transmission Technology Co., Inc. (TTC) under NASA Contract No. NAS3-24539 was to conduct research and development work on helicopter type transmissions to reduce propulsion system weight and to reduce airborne and structureborne noise and vibrations. The approach taken by TTC was to utilize precision high contact ratio helical gears in conjunction with a new concept of power transmission called the Self-Aligning Bearingless Planetary (SABP).

The results accomplished under this contract include the design, manufacturing, and no-load spin testing of two prototype helicopter transmissions, TTC Model 85G1-1, rated at 450 HP with an input speed of 35,350 rpm and an output speed of 348 rpm. The weight power density ratio of these gear modules using magnesium gear housings was determined to be .33 lbs./HP. This ratio can be reduced to .27 lbs./HP by increasing the capacity of the gear unit to 550 HP. It should be noted that TTC's analytical calculations show that the capacity of all external gear teeth of the Model 85G1-1 transmission is above 550 HP. During no load spin testing at a distance of five feet from the gear unit, the measured airborne noise at 35,000 rpm input speed was found to be 94 dB.

Based on the results achieved to date, the subject high speed, high contact ratio SABP transmission appears to be significantly lighter and quieter than contemporary helicopter transmissions. Additional work activities are recommended to further develop and demonstrate this new transmission as a potential drive for Future Advanced Rotorcraft. It should also be noted that the concept of the SABP is applicable not only to high ratio helicopter type transmissions but also to other rotorcraft and aircraft propulsion systems.

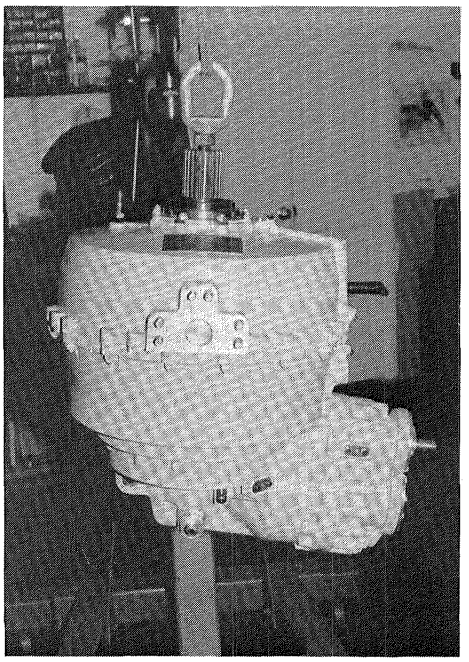

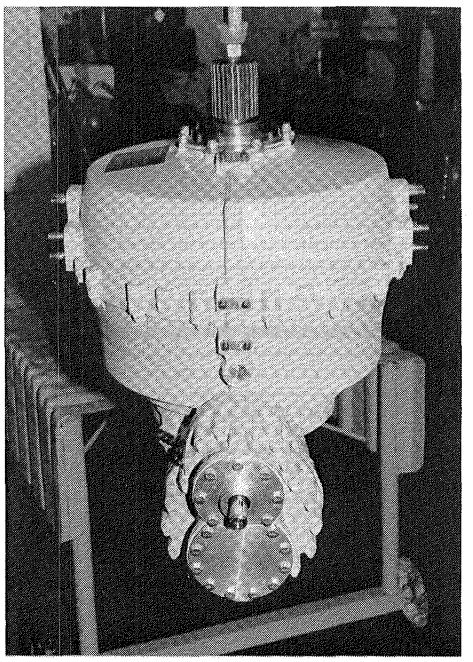

This Page Intentionally Left Blank

TABLE OF CONTENTS

Section	Title	Page
	PROJECT SUMMARY.	iii
1.0	INTRODUCTION	1
	1.1 Background.	1
	1.2 Purpose of Program.	2
	1.3 Scope of Work	3
2.0	DESIGN CRITERIA.	5
	2.1 Requirements.	5
	2.2 Objectives.	5
	2.3 Approach.	6
3.0	DESIGN DESCRIPTION	7
	3.1 Configuration	7
	3.1.1 Main Gearbox	8
	3.1.2 Accessory and Tail Rotor Drives.	8
	3.2 Test Unit Configuration	9
4.0	DETAIL DESIGN.	13
	4.1 Design Analysis Reference Data.	13
	4.1.1 Selected Numbers of Gear Teeth .	13
	4.1.2 Speeds, Torques, and Directions of Rotation.	14
	4.1.3 Gear Geometry.	14
	4.1.4 SABP Gear Ratio Derivation . . .	16
	4.1.5 SABP Spindle Orbiting Speed Derivation	17
	4.1.6 SABP Relative Pitch Line Velocities of Gear Tooth Engagements .	18
	4.1.7 SABP Gear Tooth Loads.	19
	4.1.8 SABP Assembly and Meshing Requirements.	22
	4.2 Gears	31
	4.2.1 Main Gearbox	31
	4.2.2 SABP Ring Gear Deflections . . .	42
	4.2.3 Accessory and Tail Rotor Drives.	44

TABLE OF CONTENTS - Continued

Section	Title	Page
4.0	DETAIL DESIGN - CONTINUED	
	4.3 Bearings	46
	4.4 SABP Support Rings	48
	4.4.1 Spindle Gear Load Analysis	49
	4.4.2 Ring Deflections - Outer Ring, R_2	50
	4.4.3 Ring Deflections - Inner Ring, D_2	51
	4.5 Shafts and Splines	51
	4.6 Lubrication	52
	4.7 Weight Analysis	54
5.0	MANUFACTURING AND ASSEMBLY OF 85G1-1 HELICOPTER TRANSMISSIONS	57
	5.1 SABP Spindle Gear Development	57
	5.2 SABP Assembly Fixture	75
	5.3 Materials and Processes	76
	5.3.1 Gears	76
	5.3.2 Rolling Rings	76
	5.3.3 Gear Housing	76
6.0	TEST	77
	6.1 General	77
	6.2 Oil Flow Tests	79
	6.3 Static Torque Tests	81
	6.4 Dynamic No-Load Spin Tests	83
	6.4.1 Initial Test Using the 3 HP Motor Drive System	83
	6.4.2 Test Using the 10 HP Motor Drive System	86
	6.4.3 Gear Tooth Meshing Frequencies	94
7.0	PHASE II EVALUATION	97
	7.1 General Comments	97
	7.2 Spindle Gear Design	98
	7.3 EB Welding Technique	100
	7.4 Alignment Fixture Design	100
	7.5 Specific Weight	101

TABLE OF CONTENTS - Continued

Section	Title	Page
7.0	PHASE II EVALUATION - CONTINUED	
	7.6 Potential Markets/Commercialization of SABP.	102
	7.7 Forward Planning.	103
8.0	CONCLUSIONS AND RECOMMENDATIONS.	104

1.0 INTRODUCTION

This report presents a summary of the accomplishments, findings, and results of Transmission Technology Co., Inc.'s (TTC) design, manufacture, and spin test of two high contact ratio helicopter transmissions that utilize Self-Aligning Bearingless Planetaries (SABP's). These activities were the Phase II part of a two-phase TTC/SBIR program that has been performed under the auspices of the NASA-Lewis Research Center, Contract No. NAS3-24539. The overall SBIR program, Phases I and II, covered parametric studies, trade-off studies, and the design, analysis, manufacturing and spin testing of two TTC Model 85G1-1 high contact ratio helicopter transmissions.

1.1 Background

During Phase I of the subject SBIR program, which was performed under NASA Contract No. NAS3-23937, the use of high contact ratio spur and helical gears was compared with contemporary spur gears. In addition, the major implications of using helical gears in aircraft and helicopter power transmissions were discussed. The work activities of Phase I were divided into two parts. The first part included a detailed gear tooth geometry study that examined various design and manufacturing parameters which influence gear tooth bending stresses and gear tooth compressive stresses. A mechanical model of a gear tooth generating machine was fabricated. This model and TTC's internal computer programs for gear tooth geometry factors "I" and "J" were checked for validity and utility using AGMA Standard 218.01 for rating the pitting resistance and bending strength of spur and helical involute gear teeth. This comparison produced favorable results and clearly demonstrated the sensitivity that various design parameters have on the "J" and "I" factors.

The second part of the Phase I work activities included the preparation of a preliminary design and analyses of an improved helicopter main power transmission. The design included a new concept of power transmissions called the Self-Aligning Bearingless Planetary (SABP). This new gear arrangement can be classified as a quasi-compound planetary previously studied and tested by TTC. The Phase I analyses included sizing of the gearing using AGMA 218.01 stress calculations for standard long/short addendum gears and a preliminary weight estimate.

The SABP concept was introduced in the mid-1960's and broadly covers those balanced planetary gear arrangements in which the planets are not constrained by a carrier. The results of previous studies and hardware demonstration programs by TTC and others have shown that the elimination of planet carriers is possible by internally balancing moments and forces in the various planes of action. Without a carrier, the planets are

free to adjust their position relative to each other, thus providing more uniform loading among them. The elimination of carriers (spiders) from epicyclic gear sets has many favorable implications on such factors as weight (carrier is usually the heaviest component in an epicyclic gear), cost (carriers usually represent a significant cost portion of an epicyclic gear), and on reliability (elimination of carriers eliminates the need for planet bearings, which have been shown to be susceptible to failures).

In the 1970's, the U.S. Army and Navy sponsored several programs aimed at exploring the feasibility and viability of this new power transmission concept. Prototype hardware in the 500 HP, 20 to 1 reduction ratio range was designed, manufactured and tested by Curtiss-Wright Corporation and showed internal stability, high mechanical efficiency and good load distribution. Design configuration and installation studies by Bell Helicopter, Boeing Vertol, and Sikorsky confirmed potential added advantages in weight, reliability, survivability, and cost over conventional planetary transmissions. Following the successful completion of the prototype demonstrator, a second design was evolved whose aim was to address among other factors the load sharing among the spindles while transmitting much higher torques than those used in the first prototype. The second SABP type gear module had a reduction ratio of 7 to 1 and was successfully tested at the design loads. The load distribution among the spindle gears (this unit employed seven spindles) was measured and found to be within less than 10% of each other.

The development of this new transmission concept continued with NASA sponsorship and called for the design and fabrication of two prototype SABP gearboxes applicable and retrofittable to an uprated version of OH-58 helicopters. In 1983, the first of these units was full load tested by NASA at the Lewis Research Center. The gear unit was found to be noisy and suffered early structural failure. The problem was attributed to manufacturing errors found in the compound gears which caused severe gearing misalignment and mal load distribution far beyond the limits of the design specification. The design evolved in the current program places particular emphasis on the control of alignment (timing) of the gears of the SABP stage.

Additional studies have shown that the transmission could also be made smoother and quieter through the use of high contact ratio helical gears. Thus, the concept of SABP and the use of helical gears formed the basis for the transmission design evolved during Phase II of the subject program.

1.2 Purpose of Program

Phase II of the program was begun under NASA Contract No. NAS3-24539 in April 1985, was a hardware program in which one

of NASA/TTC's advanced transmission concepts, the SABP, formed the basis for hardware design. One purpose of the program was to demonstrate improved performance and reduced noise and vibration for helicopter transmissions by using high contact ratio helical gearing.

Another purpose of the program was to identify potential manufacturers of SABP type helicopter transmissions for both the military and commercial sectors of the helicopter market. The helicopter transmission business has not been organized for rotary wing aircraft as the engine and propeller business was for fixed wing aircraft years ago. Currently, each helicopter manufacturer designs his own transmission using his own preferred configuration arrangement, component design, and vehicle integration techniques. Only one major helicopter manufacturer fabricates a majority of his own transmissions; otherwise, there are no helicopter transmission manufacturers per se -- only manufacturers of transmission components which are assembled by the helicopter manufacturers. As a result, each state-of-the-art helicopter transmission tends to be generic to the specific helicopter and that helicopter's manufacturer.

To further the advantages and benefits of standardization, NASA, as a national agency, has logically been steering helicopter transmission development and improvement programs. It seems logical that the results obtained during the subject program would further strengthen the opportunities that exist for a manufacturer to supply standardized SABP type helicopter transmissions to the marketplace. For example, these standardized transmissions would offer such benefits to helicopter manufacturers as reduced acquisition and life cycle costs, increased availability, improved performance, etc. To achieve this goal, Transmission Technology has developed a comprehensive business plan that has been presented to potential investors and manufacturers of helicopter transmission systems.

1.3 Scope of Work

The work scope of Phase II was divided into three parts:

1. Detail design of the transmission.
2. Manufacturing and no-load spin testing of two prototype transmissions.
3. Commercialization of the SABP transmission.

The subject transmission has a design rating of 450 HP with an input speed of 35,350 rpm and an output speed of 348 rpm. The transmission is coupled to the turbine shaft, which in this design operates at 35,350 rpm, and provides various integral accessory pads and tail rotor drive. Further, the gear unit incorporates high contact ratio helical gears and uses what this contractor considers to be the next generation of

helicopter transmissions; namely, an SABP type output stage. The use of such a high reduction ratio in a single module close to the rotor offers the advantages of low weight, modular form, compactness, and reduced complexity of lubrication and cooling systems.

A discussion of the design criteria and the design configuration of the subject SABP helicopter transmissions are presented in Sections 2.0 and 3.0, respectively. Detail design and analysis information is included in Section 4.0.

The results of manufacturing and no-load spin testing of two prototype transmissions are presented in Section 5.0 and 6.0 of the report, respectively. The commercialization aspect of the SABP is included as part of the overall program evaluation discussion found in Section 7.0 of this report.

The primary objective of the program was to demonstrate improved performance and reduced noise and vibrations due to the use of an SABP transmission utilizing high contact ratio helical gearing. Load and performance testing of the two transmissions is scheduled to be conducted by NASA.

2.0 DESIGN CRITERIA

2.1 Requirements

The design of the subject transmission is governed by Transmission Technology Specification No. TTC-85-01-2. The specification covers the operational, functional, performance, installation, environmental, test, and quality assurance requirements for the transmission and includes references to applicable standards and documents.

The transmission is designed to transmit 450 HP at a unidirectional input speed of 35,350 rpm with an overall reduction ratio of 100:1. Although only transmitted torque is scheduled to be applied during test evaluation, the transmission is also designed to handle an axial load of 4,750 lbs. and a bending moment of 14,000 in.-lbs. on the output shaft. Design life is 3,000 hours for bearings and 10,000 hours for other dynamic components.

2.2 Objectives

Previous work by Transmission Technology, Curtiss-Wright Corporation and related studies by Bell Helicopter, Boeing Vertol, and Sikorsky have confirmed the potential advantages in specific weight, reliability, survivability, and cost when using a SABP output stage reduction as compared to using a conventional two-stage planetary. The design of the subject transmission is arranged to further demonstrate these advantages in addition to showing a significant reduction in noise and vibration levels.

Specific design and performance goals include:

- -- input to the transmission at engine operating speed, i.e. a gear ratio of approximately 100 to 1.
- -- integral drives for the tail rotor, a generator, two hydraulic pumps, a two-element oil pump (pressure and scavenge), and a tachometer.
- -- a specific weight improvement over contemporary transmissions.
- -- reduced noise and vibration levels compared to contemporary transmissions.

2.3 Approach

One of the main features of the current design is the use of high contact ratios, helical and spiral bevel gear meshes. All gear meshes have an overall contact ratio of three (3) or more.

In addition to the use of high contact ratio gearing, all external gears, are straddle mounted to limit deflection of the gear and to improve load sharing in each mesh.

The planetary fixed ring gear is mounted to the housing and acts as a positioning member for the SABP. The output ring gear is designed to flex to reduce vibration and to improve load sharing.

Computerized analyses programs were used to optimize the gear tooth pitting resistance and bending strength geometry factors "I" and "J", respectively, and to take advantage of the balancing relationship between them. Although further work and optimization of gear balancing is feasible, a decision was made to keep the overall contact ratio as close to an integer as practicable and to accept higher calculated gear life than stipulated by the design. This increased gear life can also be converted into a higher power rating at the design life. For further discussion of potential power rating, see Section 7.5.

3.0 DESIGN DESCRIPTION

3.1 Configuration

The design configuration of the high contact ratio helicopter transmission is shown by Drawing No. L50720 and is illustrated schematically by Figure 1. As per the design specification, the dynamic components of the transmission have been designed for service intervals of 10,000 hours while bearings have been selected to achieve a minimum bearing B_{10} life of 3,000 hours. Using these design criteria for a production transmission should allow operation of the drive train with service intervals that approach "on-condition" operation.

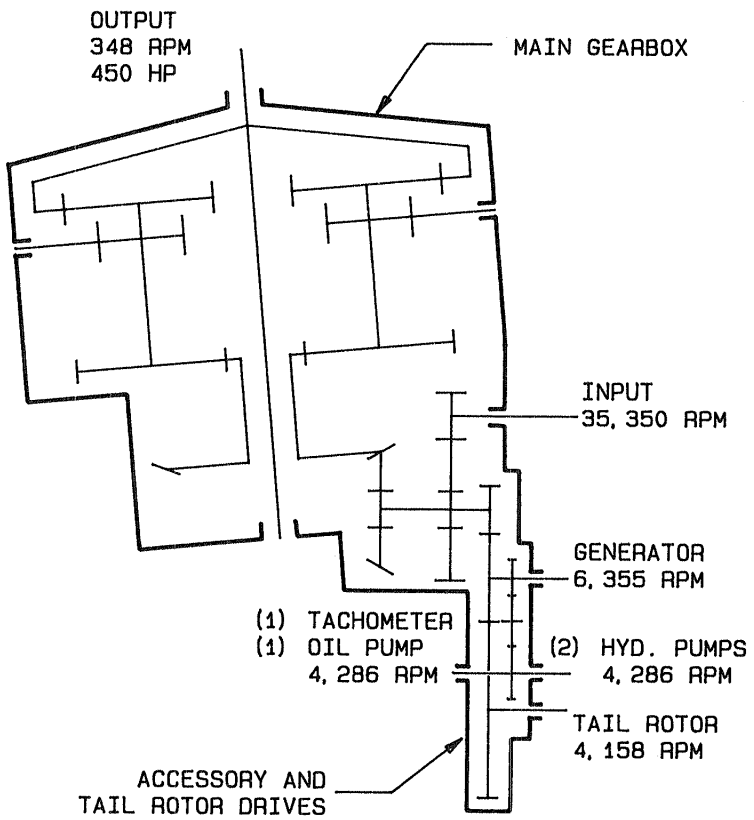

FIGURE 1 - SCHEMATIC, HIGH CONTACT RATIO HELICOPTER TRANSMISSION

The transmission is comprised of two sections; namely, the main gearbox section and the accessory and tail rotor drive section.

3.1.1 Main Gearbox

The main gearbox section of the transmission accepts power from the engine at engine turbine speed of 35,350 rpm. With a gear reduction ratio of 101.47, the gearbox reduces engine speed to 348 rpm to power the helicopter rotor system. A directional change of 95° is also provided to take the nearly horizontal input from the engine and to produce a near vertical output for the rotor. All the gearing in the main gearbox section of the transmission is comprised of high contact ratio helical and spiral bevel gear sets.

3.1.2 Accessory and Tail Rotor Drives

The accessory and tail rotor drive section of the transmission provides for powering a generator for the helicopter electrical services, two hydraulic pumps for the helicopter primary flight controls, an integral two-element oil pressure lube and scavenge pump, a tachometer, and the tail rotor of the helicopter. All the gearing is high contact ratio spur gearing. Data for these drives and the arrangement of the gear train are presented in Figure 2.

ACCESSORY & TAIL ROTOR DRIVES			
ITEM	HP	RPM	DRIVE PAD
GENERATOR 300 amp 28VDC	11 1/4	6,355	AND 20001
HYDRAULIC PUMP (2) 6 GPM @ 1500 PSI	5 1/4 EA	4,286	AND 20001
OIL PUMP (2 ELEMENT) 5 GPM @ 50 PSI	1/3	4,286	AND 20001
TACHOMETER	NEGLIGIBLE	4,286	AND 20005
TAIL ROTOR	83	4,158	TTC

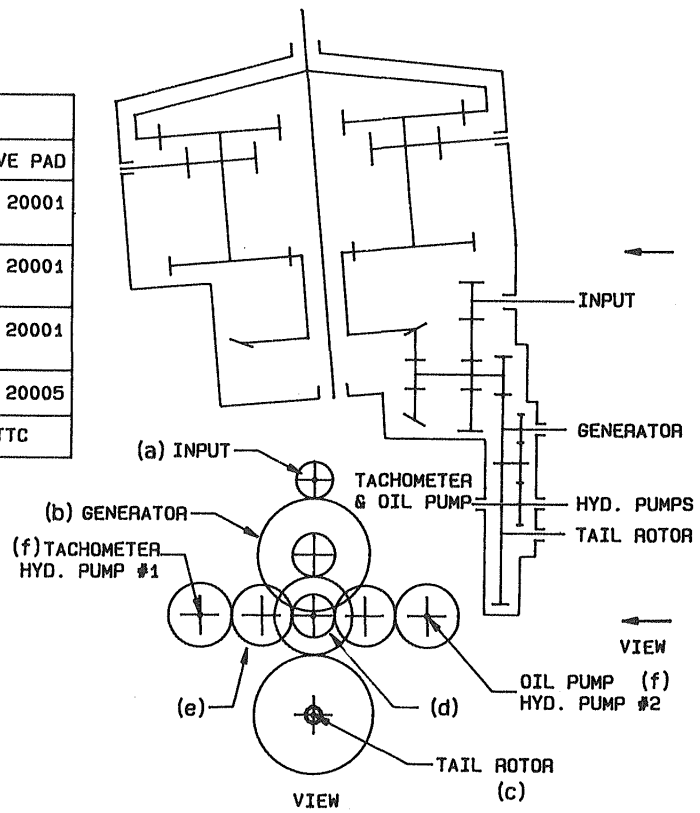

FIGURE 2 - ACCESSORY AND TAIL ROTOR DRIVES

3.2 Test Unit Configuration

The test unit configuration, which is the hardware built for test evaluation, is the main gearbox section of the transmission. The design configuration is illustrated by the schematic of Figure 3.

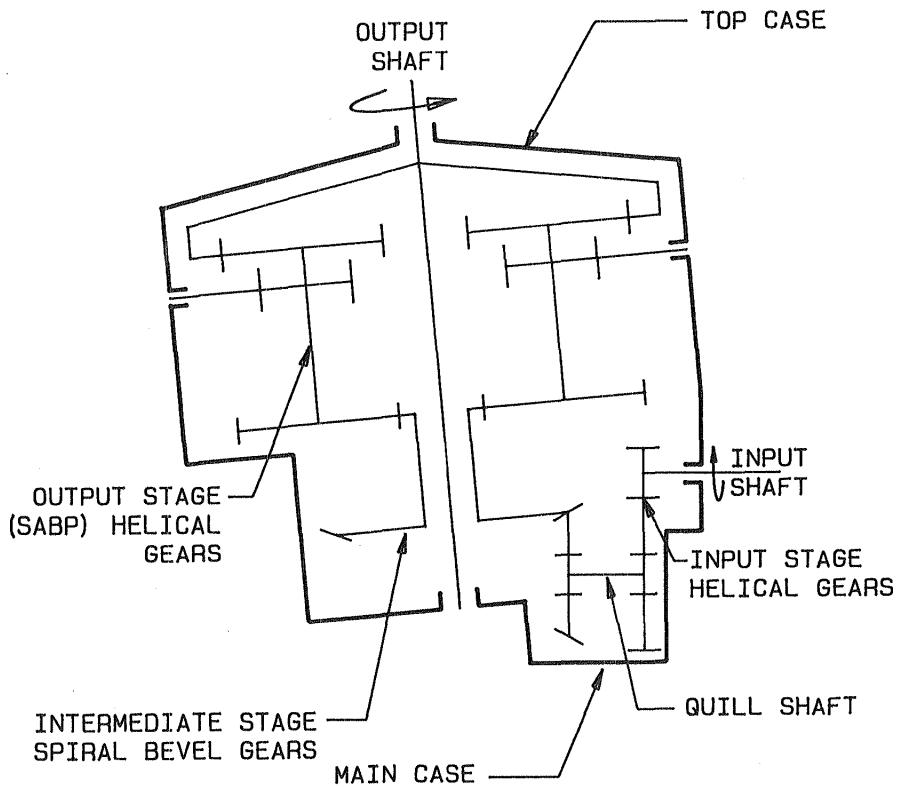

FIGURE 3 - SCHEMATIC, TEST UNIT CONFIGURATION

The two units manufactured by TTC are identified as Model 85G1-1. This version of the gearbox assembly is depicted by Assembly Drawing No. 85G1 entitled "High Contact Ratio SABP Helicopter Transmission" and associated Parts List PL-85G1 released August 29, 1986. Figure 4 shows a photograph of the 85G1-1 SABP transmission. A cross-sectional view of the unit is shown in Figure 5. The fixed structure of the unit is comprised of three main components--input housing, main case, and top case. The unit is mounted by a three-point suspension--a left and right upper mounting point on the lower section of the top case and a lower mounting point at the bottom front of the main case. All housing castings are aluminum alloy 356-T6.

The input housing is a matched assembly which contains the intermediate housing that supports the roller bearings of the input offset helical gear set. The main case is a matched assembly that includes the duplex bearing support housings for the bevel gear set.

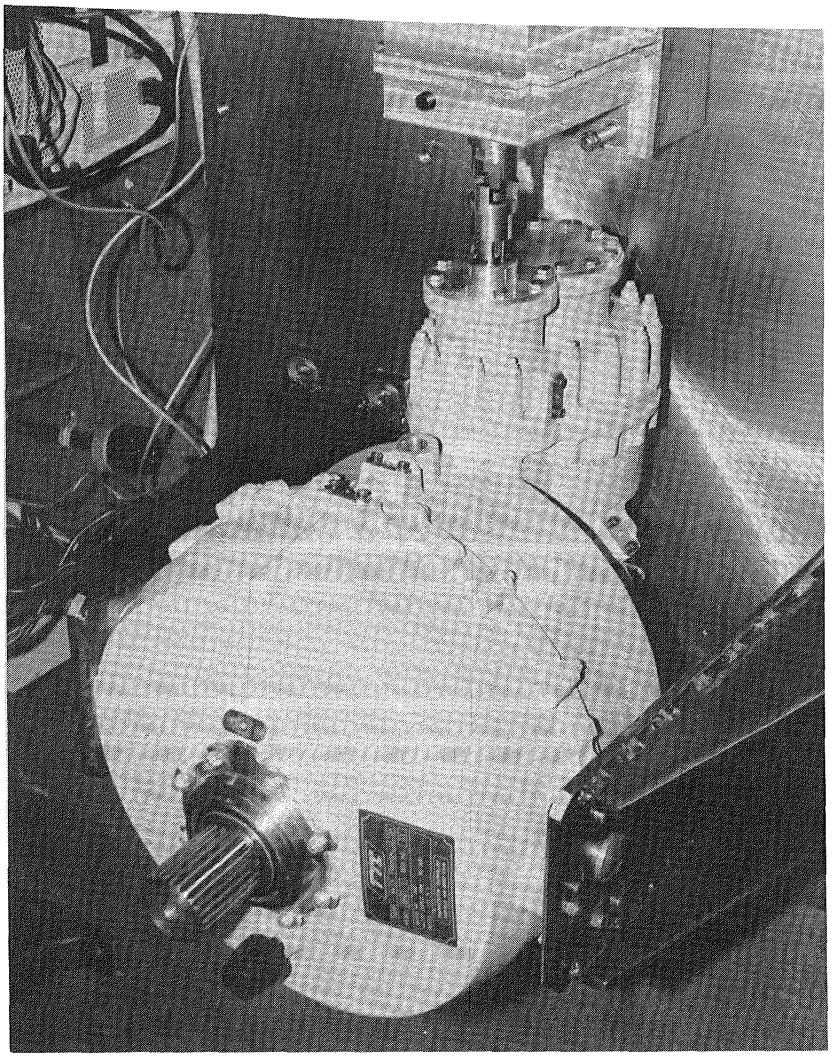

FIGURE 4 - PHOTOGRAPH OF TTC MODEL 85G1-1 SABP HELICOPTER TRANSMISSION

The gearbox is comprised of three stages of speed reduction. High contact ratio gearing is used in all three stages of the speed reducer to provide smooth, quiet, low vibration operation.

The input stage consists of a single mesh that utilizes single helical gears and reduces the input engine speed from 35,350 rpm to 11,615 rpm. The output of this stage is coupled to the intermediate stage via a quill shaft. The intermediate stage of gear reduction is a spiral bevel gear set which provides the change in direction of power transmission required by the rotor and further reduces the speed from 11,615 rpm to 6,052 rpm. The third stage of gear reduction is a compound planetary of the Self-Aligning Bearingless Planetary (SABP) type. The SABP also uses helical gears and accomplishes the final speed reduction from 6,052 rpm to 348 rpm.

The gears of the input offset helical gear set and the bevel gear set are straddle mounted by bearings to limit deflections, to reduce noise and dynamic loads, and to improve load sharing in each mesh.

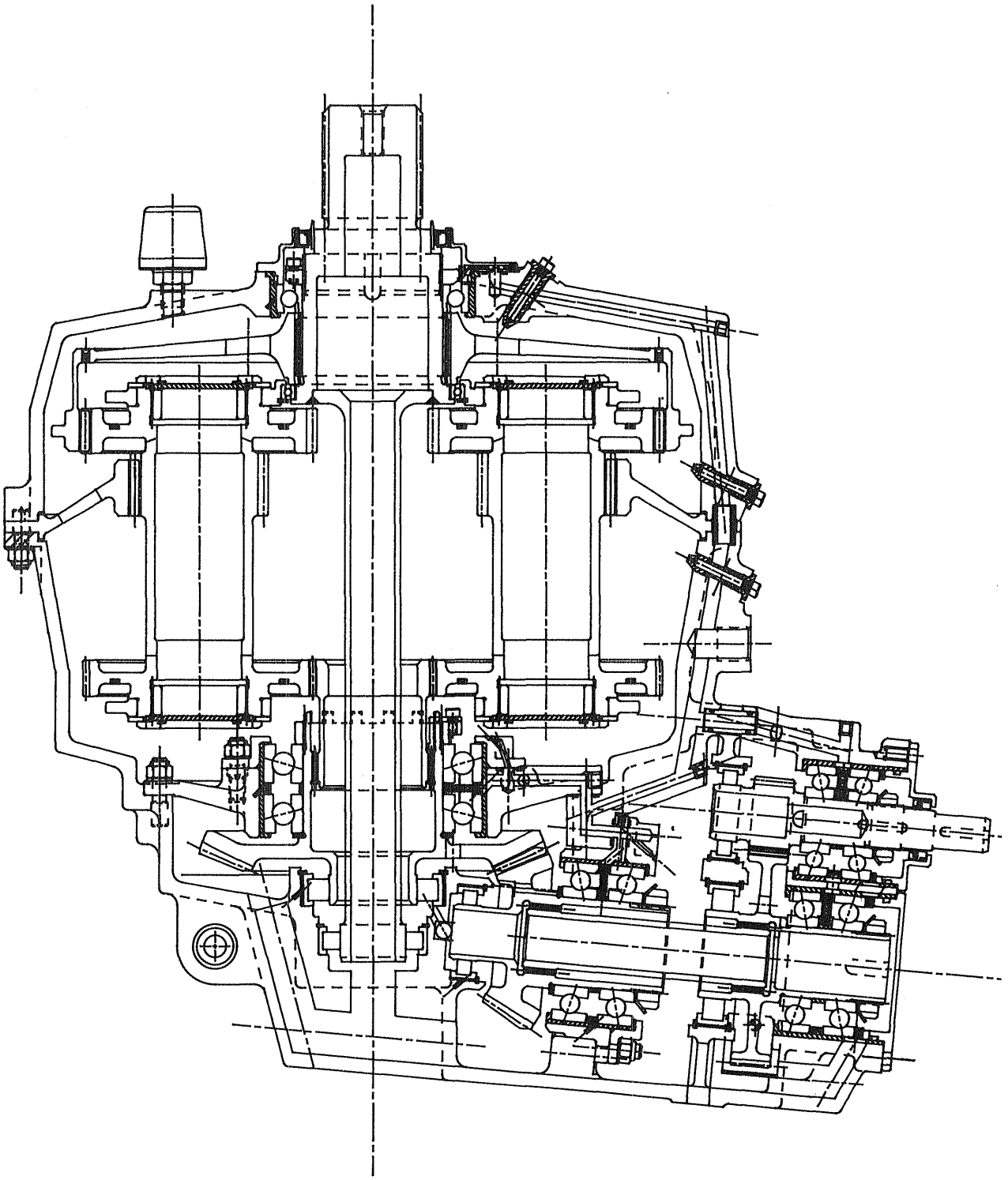

FIGURE 5 - 85G1-1 HIGH CONTACT RATIO HELICOPTER TRANSMISSION CROSS-SECTIONAL VIEW

The helical SABP output stage is a compound planetary with four (4) three-gear spindles as planets. The planetary fixed ring gear is mounted to the housing structure and acts as a positioning member for the SABP. The output ring gear, which drives the output shaft through a conical flange and splines, is designed to flex to reduce vibration and to improve load sharing.

All gears are case carburized 9310 (AMS6260) steel except for the two planetary ring gears which for the test units are through hardened 4340 (AMS6415). The ring gears would normally be nitrided, but the requirement was waived for the test units. It was felt that nitriding would serve no significant purpose due to the short duration of the anticipated test program. Further, through hardened gears facilitate visualization of contact patterns during load testing to a much higher degree than nitrided gears. The quill shaft is also through hardened 4340. The conical flange and output shaft are also 4340 with nitrided spline teeth.

The SABP planet support rings are made from through hardened 52100 bearing steel. Bearing retainers, liners, and spacers are made from 1040 steel. Machined aluminum parts, such as seal housings and covers, are 6061-T6.

Lube oil is fed into and scavenged from the main case. A 3/4-inch tapped hole for oil in, is located at the rear of the main case just above the interface location with the input housing. The oil out port is a horizontal 1 1/16-inch tapped hole located on the left side of the main case in the bottom cavity and in line with the output shaft centerline. A system of internal passages, transfer tubes, and lube jets distribute the oil to the gears and bearings for lubrication and cooling.

The 85G1-1 test assembly weighs 167 lbs. The unit's weight would have been 152 lbs. if the housings were made of magnesium instead of aluminum. The 152 lbs. translate to an equivalent specific weight of 0.33 lbs./HP which is representative of current state of the art for high performance power transmission systems. A further discussion of specific weight is presented in Section 7.5 of this report.

4.0 DETAIL DESIGN

4.1 Design Analysis Reference Data

This section presents a selected set of data that represents the final design configuration of the transmission and illustrates the various analyses conducted to establish the validity of the design.

4.1.1 Selected Numbers of Gear Teeth

Figure 6 shows the number of gear teeth selected for each gear in the gearbox. An iterative design process, taking into account a large number of design parameters, was employed to accomplish this task. The resultant gear meshes are fully hunting tooth combinations except for the input mesh of the SABP stage. Further, consideration was given to the selection of the SABP gearing to be non-factorizing tooth combinations and to satisfy the meshing requirements of Section 4.1.8 of this report.

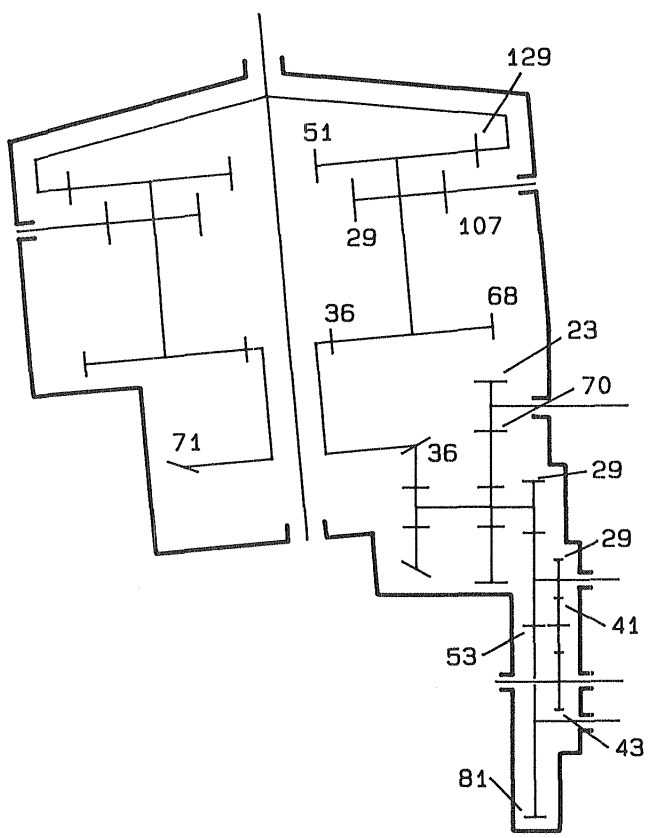

FIGURE 6 - NUMBERS OF TEETH SELECTED FOR GEARS

4.1.2 Speeds, Torques, and Directions of Rotation

Figure 7 shows the relative speeds, torques, and directions of rotation for each of the shaft elements of the transmission. It also shows the orbiting speed and direction of rotation for the spindle gears of the SABP output stage. All torque values shown are based on rated engine speed of 35,350 rpm and 450 HP and assume 100% gear mesh efficiency throughout the gearbox.

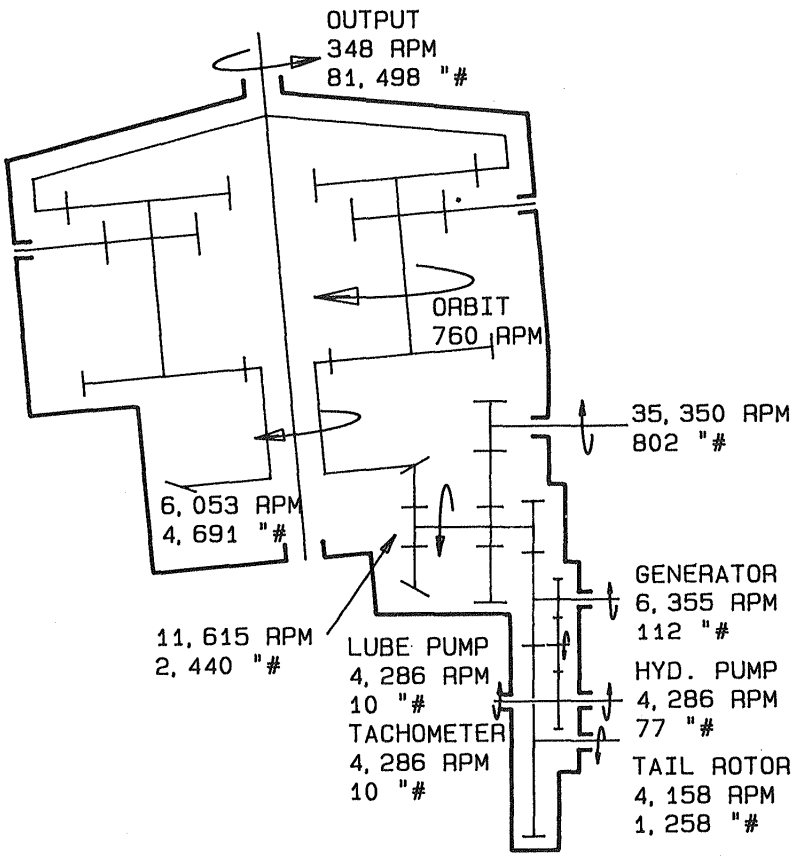

FIGURE 7 - SPEEDS, TORQUES, AND DIRECTION OF ROTATION

4.1.3 Gear Geometry

Table I summarizes the gear geometry for all of the gears in the subject helicopter transmission. The main gearbox uses high contact ratio helical and spiral bevel gears. The accessory and tail rotor drive gears are spur gears.

TABLE 1

GEAR GEOMETRY

	NUMBER OF TEETH	TRANSVERSE DIAMETRAL PITCH	NORMAL DIAMETRAL PITCH	PITCH DIAMETER	FACE WIDTH	PRESSURE ANGLE	HELIX/ SPIRAL ANGLE
MAIN GEARBOX							
High Speed Pinion	23	14.7281	16.000	1.5616	.90	20 deg.	23 deg.
High Speed Gear	70	14.7281		4.7528	.90		23 deg.
Bevel Pinion	37	9.1026	---	4.0648	1.28		35 deg.
Bevel Gear	71	9.1026		7.8000	1.28		35 deg.
SABP Sun Gear	36	13.3333	14.484	2.7000	.80		23 deg.
SABP Input Planet Gear	68	13.3333		5.1000	.80		
SABP Fixed Planet Gear	29	10.000	10.863	2.9000	1.30		
SABP Fixed Ring Gear	107			10.7000	1.27		
SABP Output Planet Gear	51			5.1000	1.00		
SABP Output Ring Gear	129			12.9000	.90		
ACCESSORY AND TAIL ROTOR DRIVES							
Accessory PTO Gear	29	16.000	16.000	1.8125	.90	20 deg.	0 deg.
Generator Drive Gear	53			3.3125	.85		
Tail Rotor Drive Gear	81			5.0625	.45		
Auxiliary PTO Gear	29			1.8125	.25		
Idler Gear	41			2.5625	.30		
Pump Gear Drive	43			2.6875	.25		

4.1.4 SABP Gear Ratio Derivation

The need to derive an equation for the determination of the SABP reduction ratio is self evident. Using instantaneous centers and velocity vectors, the reduction ratio of the SABP can be readily determined. The schematic shown below illustrates the various vectors, their relative relationships, and the method used to derive a mathematical expression for the reduction ratio of this specific configuration of the SABP.

GENERAL CASE

$$V_1 = r_1 \omega_1$$

$$\omega_1 = V_1 / r_1$$

$$V_0 = r_6 \omega_0$$

$$\omega_0 = V_0 / r_6$$

$$\frac{V_1}{r_4 - r_1} = \frac{V_0}{r_6 - r_4}$$

SPECIFIC CASE

$r_1 = 1.35$ $\quad r_4 = 5.35$

$r_2 = 2.55$ $\quad r_5 = 2.55$

$r_3 = 1.45$ $\quad r_6 = 6.45$

CENTER DISTANCE $C = 3.900$

REDUCTION RATIO

$$Mg = \frac{6.45\,(5.35 - 1.35)}{1.35\,(6.45 - 5.35)} = 17.3737:1$$

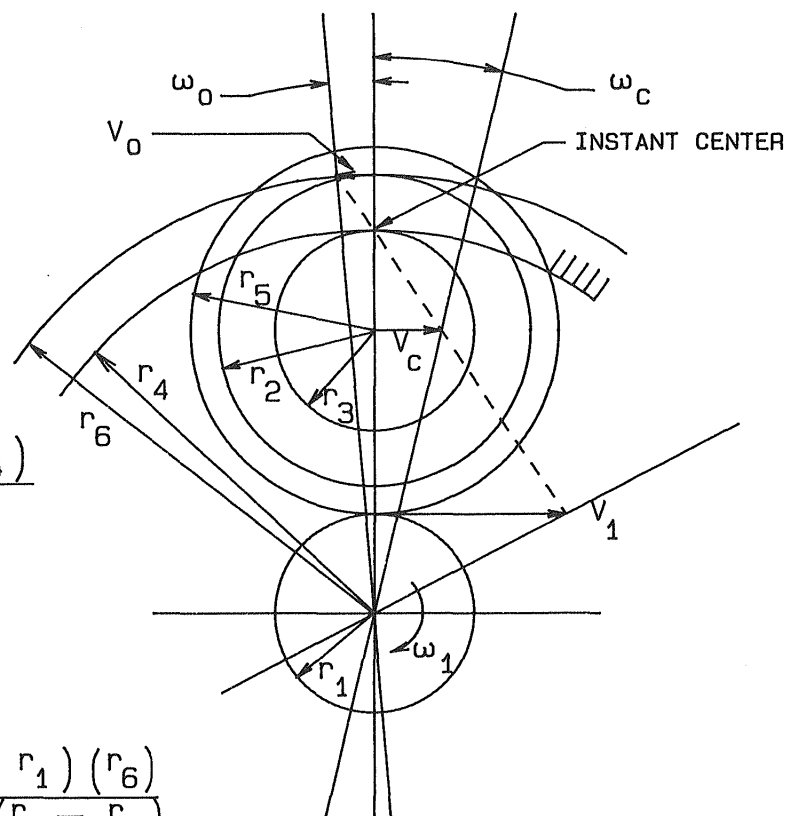

$$V_0 = \frac{V_1 \left(r_6 - r_4\right)}{r_4 - r_1}$$

REDUCTION RATIO

$$Mg = \frac{\omega_1}{\omega_0}$$

$$Mg = \frac{V_1 \left(r_4 - r_1\right)\left(r_6\right)}{\left(r_1\right)\left(V_1\right)\left(r_6 - r_4\right)}$$

$$\boxed{Mg = \frac{r_6 \left(r_4 - r_1\right)}{r_1 \left(r_6 - r_4\right)}}$$

GENERAL EQUATION FOR OVERALL REDUCTION RATIO

4.1.5 SABP Spindle Orbiting Speed Derivation

Similar to the instantaneous centers and velocity vectors used in the schematic in Section 4.1.4, the spindle orbiting speed can be calculated. The schematic shown below illustrates the method used to derive a mathematical expression which can be used to calculate the spindle orbiting speed. This expression is required to facilitate the determination of the centrifugal forces acting on the rolling rings.

GENERAL CASE

$$V_1 = (r_1)(\omega_1)$$

$$\omega_c = V_c / (r_1 + r_5)$$

$$V_c = (r_1 + r_5)(\omega_c)$$

$$\omega_1 = V_1 / r_1$$

$$\frac{V_1}{r_4 - r_1} = \frac{V_c}{r_3}$$

SPECIFIC CASE

$r_1 = 1.35$ $r_4 = 5.35$
$r_2 = 2.55$ $r_5 = 2.55$
$r_3 = 1.45$ $r_6 = 6.45$

CENTER DISTANCE C = 3.900

SPEED RATIO

$$Mg = \frac{(5.35 - 1.35)(1.35 + 2.55)}{(1.35)(1.45)} = 7.97:1$$

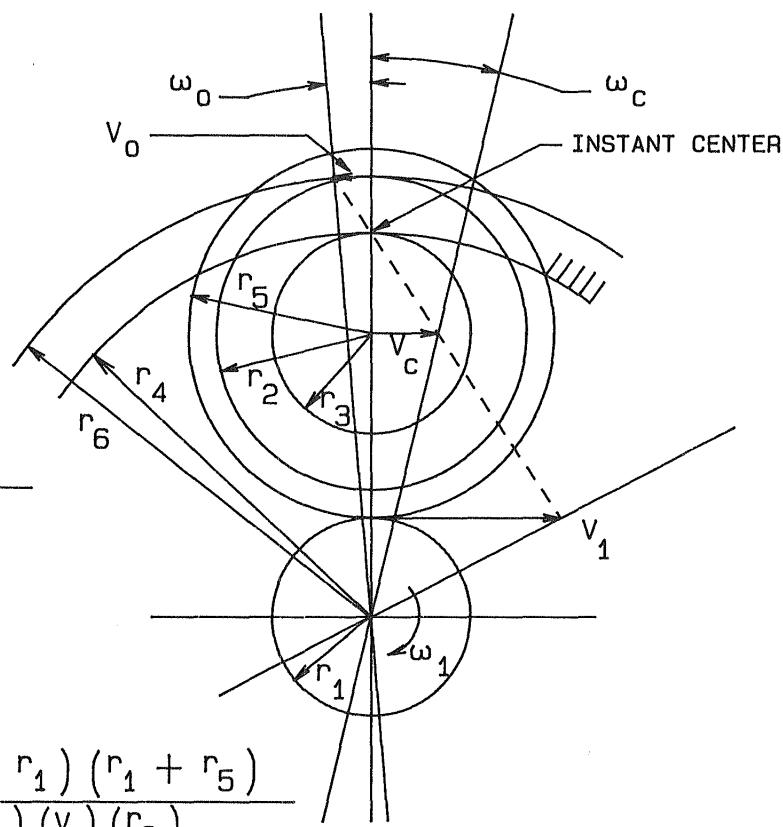

$$V_c = \frac{V_1 (r_3)}{r_4 - r_1}$$

SPEED RATIO

$$Mg = \frac{\omega_1}{\omega_c}$$

$$Mg = \frac{V_1 (r_4 - r_1)(r_1 + r_5)}{(r_1)(V_1)(r_3)}$$

$$\boxed{Mg = \frac{(r_4 - r_1)(r_1 + r_5)}{(r_1)(r_3)}}$$

GENERAL EQUATION FOR DETERMINING SPINDLE ORBITING SPEED WITH RESPECT TO INPUT SPEED.

4.1.6 SABP Relative Pitch Line Velocities of Gear Tooth Engagements

In order to determine the relative pitch line velocities at the various tooth engagements within the SABP gear module, the concept of instantaneous centers will be used again. The derivation and a sample calculation are presented below to illustrate the method and to examine the relative speeds. These calculations are required to calculate potential values of recirculating power which need to be taken into account during the efficiency calculations.

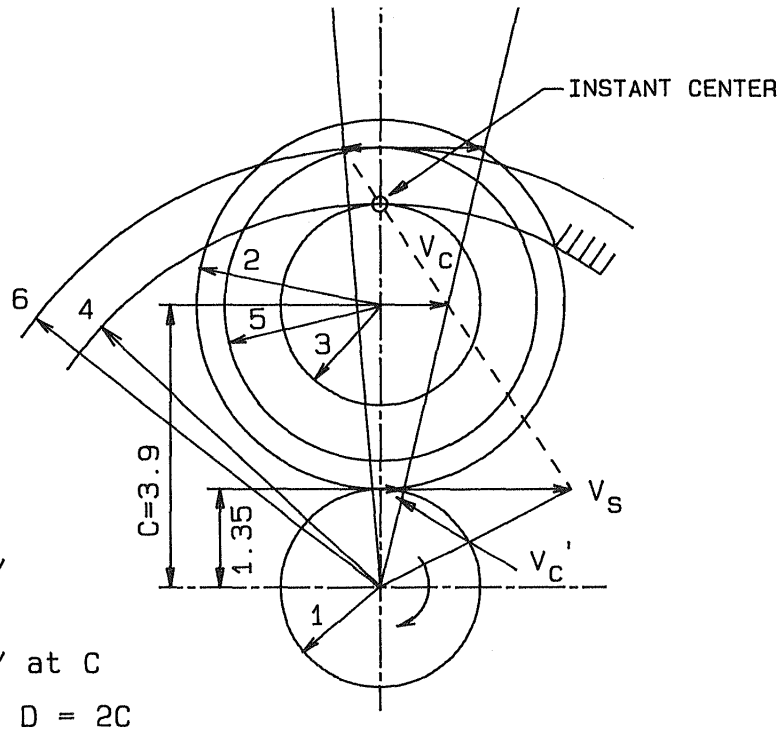

$V_r = V_s - V_c'$

V_s = INPUT VELOCITY

V_c' = ORBITING VELOCITY CONTRIBUTION

V_c = ORBITING VELOCITY at C

= π (D/12) rpm where D = 2C
and rpm = carrier orbiting speed = 760

$V_c = (\pi)(7.8)(760)(1/12) = 1552$ fpm

$V_c/3.9 = V_c'/1.35$

$V_c' = [(V_c)(1.35)]/3.9 = [(1552)(1.35)]/3.9 = 537$ fpm

d = SUN GEAR PITCH DIAMETER

$V_r = V_s - V_c' = (\pi)(d/12)(rpm) - 537$
$= (\pi)(2.7/12)(6053) - 537$

$V_r = 4278 - 537 = 3742$ fpm OR
RELATIVE SPEED OF SUN GEAR WITH RESPECT TO INPUT SPINDLE GEAR =

$^{12}V_r = (\pi)(d) = (12)(3741)/(\pi)(2.7) = 5293$ rpm

4.1.7 SABP Gear Tooth Loads

Figure 8 shows the application of loads to the three gears of the SABP spindles and how these loads are resolved into tangential, axial, and separating components on the gear teeth. Note that the load application point on the input mesh is 180° displaced from the application points on the fixed and output meshes.

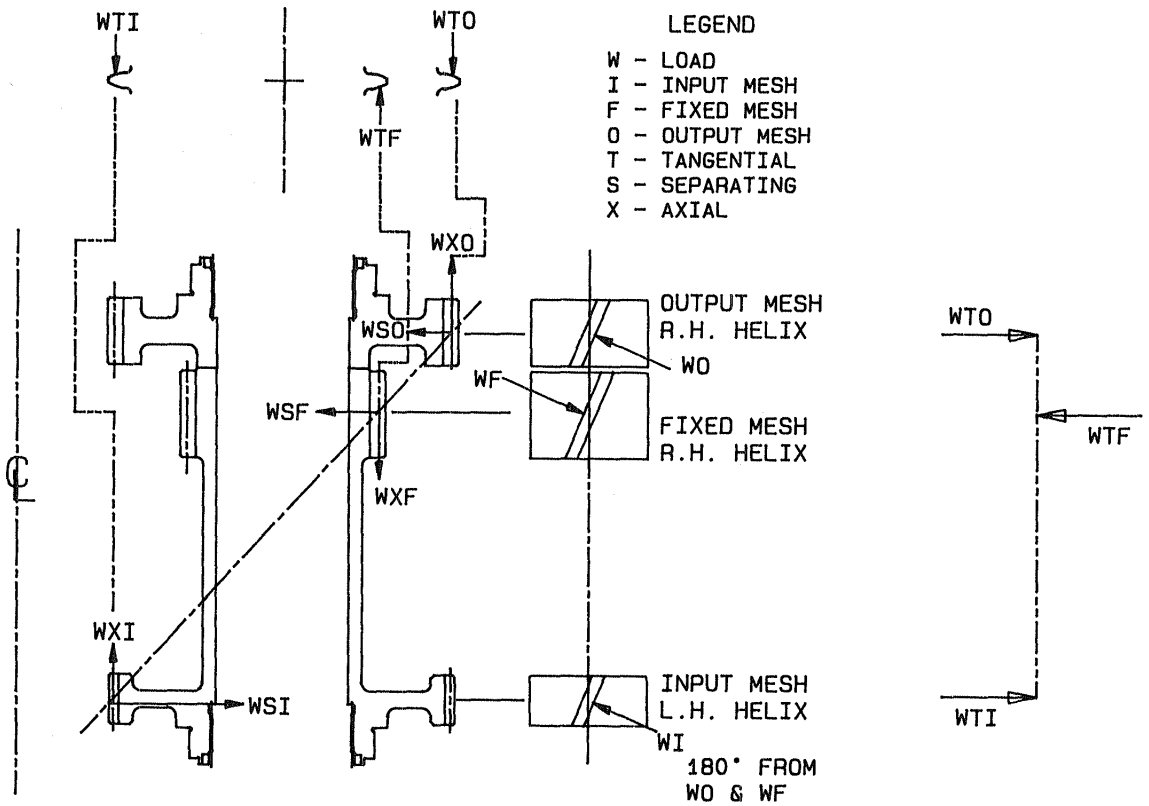

FIGURE 8 - IDENTIFICATION OF SABP GEAR TOOTH LOADS

Tooth loads are developed as follows:

<u>Tangential Loads (WT)</u>

Q_o = HP x 63025/rpm = 450 x 63025/348
= 81,498 in.-lbs.
WTO = 2 x Q_o/(Do x n) = 2 x 81498/(12.9 x 4)
= 3,159 lbs.
Q_i = Q_o/Mg = 81498/17.3737 = 4691 in.-lbs.
WTI = 2 x Q_i/(Di x n) = 2 x 4691/(2.7 x 4)
= 867 lbs.
WTF = WTO + WTI = 3159 + 867 = 4026 lbs.

Axial Loads (WX)

$$WXO = WTO \tan\psi = 3159 \tan 23^\circ = 1{,}341 \text{ lbs.}$$
$$WXF = WTF \tan\psi = 4026 \tan 23^\circ = 1{,}709 \text{ lbs.}$$
$$WXI = WTI \tan\psi = 867 \tan 23^\circ = 368 \text{ lbs.}$$

Separating Loads (WS)

$$WSO = WTO \tan\phi_n/\cos \qquad \text{Since } \tan\phi_n = \tan\phi \cos\psi$$

Then:

$$WSO = WTO \tan\phi = 3159 \tan 20^\circ = 1{,}150 \text{ lbs.}$$
$$WSF = WTF \tan\phi = 4026 \tan 20^\circ = 1{,}465 \text{ lbs.}$$
$$WSI = WTI \tan\phi = 867 \tan 20^\circ = 315 \text{ lbs.}$$

A summary of gear tooth loads for the SABP is presented below in Table 2.

TABLE 2

SUMMARY OF GEAR TOOTH LOADS

LOADS	INPUT MESH	FIXED MESH	OUTPUT MESH
Tangential W_T	867	4026	3159
Radial W_R	315	1465	1150
Thrust W_X	368	1709	1341

Power transmission is defined as a product of force being transmitted through the gear mesh times the relative pitch line velocity. HP = WV/K where W is the tangential gear load in pounds, V is the relative velocity, and K is a power constant which is equal to 33,000. In epicyclic gear arrangements and particularly in compound epicyclics, the gear tooth meshing relative pitch line velocities can be significantly different from the pitch line velocity values as calculated by multiplying the gear pitch circumference by the rpm's of the gear.

Traditionally, the power transmitted through a compound epicyclic gear is called "Recirculating Power." Using the derivations presented in Section 4.1.6, the relative pitch line velocities at the three SABP gear meshes can now be determined. Also from Section 4.1.6, the relative pitch line velocity at the input sun gear mesh is V_R = 3,742 fpm. Thus, power transmitted through the sun mesh = WV/33,000 = [(867)(3742)]/33,000 = 98.3 HP.

Since there are four spindles in mesh at this location, the total power being transmitted is equal to (98)(4) = 392 HP.

Referring to Section 4.1.6, the pitch line velocity at the fixed mesh can be computed as follows:

V_{3-4} = [(Nc)(π)(D_r)]/12 = [(760)(π)(10.7)]/12 = 2,129 fpm

Power Transmitted
at the Fixed Mesh = [(2,129)(4,026)]/33,000 = 259 HP

Similarly, the relative pitch line velocity at the output mesh is:

V_{5-6} = [V_{3-4}(d_5/d_3)] = (2,129)(5.1/2.9) = 3,742 fpm

HP = [(3,159)(3,742)]/33,000 = 358 HP

The accuracy of the above computations can be verified by converting the above calculated relative speeds of engagements to equivalent shaft rpm.

Thus:

Input Sun Gear

S_{1s} = [(V_{1-2})(12)]/[(π)(d_s)]
= [(3,742)(12)]/[(π)(2.7)]
= 5,294 rpm

Fixed Mesh

S_{FG} = [(V_{3-4})(12)]/[(π)(d_F)]
= [(2,129)(12)]/[(π)(2.9)]
= 2,803 rpm

Output Mesh

S_{OG} = [(V_{5-6})(12)]/[(π)(d_O)]
= [(3,742)(12)]/[(π)(5.1)]
= 2,803 rpm

OK

A summary of Recirculating SABP Powers is presented in Table 3 below:

TABLE 3

SUMMARY OF RECIRCULATING SABP POWERS

	VELOCITY OF ENGAGEMENT	HP TRANSMITTED THROUGH EACH MESH	RELATIVE SPEED
Sun Mesh	3,742	98	5,294
Fixed Mesh	2,129	259	2,803
Output Mesh	3,742	358	2,803

4.1.8 SABP Assembly and Meshing Requirements

During the design of epicyclic gears, consideration must be given to the assembly and gear tooth meshing requirements. Various analytical equations have been developed to assist the design engineer in accomplishing this task.

The SABP stage of the subject gearbox is a unique epicyclic gear arrangement. It combines two compound planetary gear trains in three meshes with one of the meshes being common to both compound gear trains. As can be seen by Figure 9, the three meshes

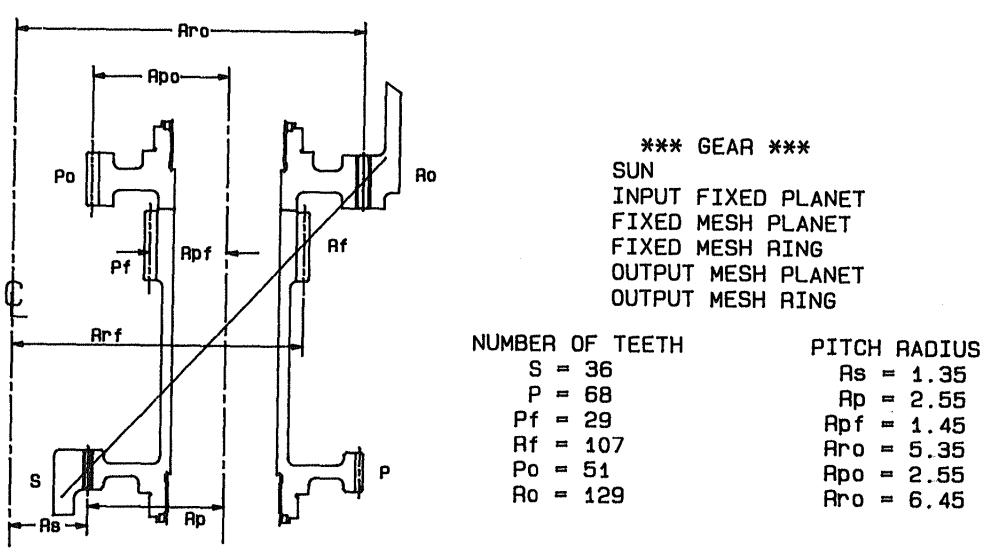

FIGURE 9 - SABP DESIGN RADII AND GEAR TOOTH NUMBERS

are the common input sun gear mesh, S and P, the fixed ring gear mesh P_f and R_f, and the output ring gear mesh, P_o and R_o. The two compound planetaries are S, P, P_f, and R_f and S, P, P_o, and R_o. A spindle gear assembly carries the three planet gears, P, P_f, and P_o on a single shaft axis. There are four spindle gear assemblies in the subject SABP.

The SABP gear system must satisfy all of the assembly and meshing requirements for single epicyclic gears, compound epicyclic gears, and the combination of compound gears which will be named "three-mesh compound epicyclic gears." For the gear analysis, five equations are used to verify that the gear unit can be assembled and that the gear meshing requirements are satisfied. Four of these equations can be recognized as those generally found in texts and papers pertaining to epicyclic gear sets. The fifth equation is specifically related to the three-mesh compound epicyclic gear. It is not as generally publicized as the other four, and it will be treated in more detail in the text that follows.

To Assemble Simple Epicyclic Gears:

$$R = S + 2P \qquad \text{Equation 1}$$

Where:
- R = number of ring gear teeth
- P = number of planet gear teeth
- S = number of sun gear teeth

$$(R + S)/n = i \qquad \text{Equation 2}$$

Where:
- n = number of planets
- i = integer

To Assemble Compound Epicyclic Gears:

$$[(P)(R_f) + (P_f)(S)]/n = i \qquad \text{Equation 3}$$

Where:
- P = number of first reduction planet gear teeth
- R_f = number of ring gear teeth
- P_f = number of second reduction planet gear teeth
- S = number of sun gear teeth
- n = number of planets or spindles
- i = integer

$$D_R = D_S + D_{P1} + D_{P2} \qquad \text{Equation 4}$$

Where:
- D_R = ring gear pitch diameter
- D_S = sun gear pitch diameter
- D_{P1} = 1st reduction planet gear pitch diameter
- D_{P2} = 2nd reduction planet gear pitch diameter

To Assemble Three-Mesh Compound Epicyclic Gears

$$J = [(i)(P)]/n \pm (G)/(n) \qquad \text{Equation 5}$$

Where:
- J = integer
- i = integer from 1 to n (must be the same value for all three meshes)
- P = number of teeth in planet gear
- G = number of teeth in the gear meshing with the planet (use + for external gears and - for internal gears)
- n = number of planets or spindles

Equation 4 actually defines the requirement that the two gears of the compound planet must lie on the same axis, with the axis being located at the radius at which the planet orbits around the centerline of the planetary. This must be true also for the three planet gears of the three-mesh compound gear. Equation 4 can be rewritten in terms of radii as follows:

$$R_R = R_S + R_{P1} + R_{P2}$$

or

$$R_S + R_{P1} = R_R - R_{P2}$$

or in the nomenclature of Figure 9

$R_S + R_P = R_{Rf} - R_{Pf}$ for the fixed mesh compound planetary

and

$R_S + R_P = R_{Ro} - R_{Po}$ for the output mesh compound planetary

and since R_S and R_P are common to both gear trains:

$$R_S + R_P = R_{Rf} - R_{Pf} = R_{Ro} - R_{Po}$$

$$1.35 + 2.55 = 5.35 - 1.45 = 6.45 - 2.55$$
$$3.9 = 3.9 = 3.9$$

Where: 3.9 is the orbit radius of the three-planet spindle gear assembly.

Past experience with high performance gears and epicyclic gear arrangements shows that to reduce noise and dynamic loading the gear meshes should be designed to be non-factorizing. In addition, hunting gear tooth combinations should be selected whenever possible and practicable. To achieve non-factorizing tooth combinations in an epicyclic gear arrangement, the planet gear teeth of each spindle must be in a different meshing

engagement with the mating ring gear at any instant in time. This requirement can be expressed mathematically as follows:

$$N/n = i + (x/n)$$

Where: N = number of teeth
n = number of planets
i = integer
x/n = irreducible fraction

Both the fixed and output ring gear meshes of the SABP have non-factorizing tooth combinations, which is verified as follows:

<u>Fixed Ring Gear Mesh</u>:
Planet, P_f 29/4 = 7 + 1/4
Gear, R_f 107/4 = 26 + 3/4

<u>Output Ring Gear Mesh</u>:
Planet, P_o 51/4 = 12 + 3/4
Gear, R_o 129/4 = 32 + 1/4

For complete gear tooth hunting, every tooth on one gear in a given mesh will mate with every tooth on the other gear. This requirement stipulates that the number of teeth in the mating gear have no common factor higher than one (1). For partial hunting, any tooth on one gear will mate with the number of teeth on the other gear divided by the highest common factor between the numbers of teeth on both gears.

The input and output meshes have partially hunting tooth combinations, and the fixed mesh tooth combination is fully hunting as shown below:

<u>Input Mesh</u> - Partially Hunting
68/36 = (1 x 2 x 2 x 17)/(1 x 2 x 2 x 9)
Highest common factor is 2 and mesh hunts every 2nd tooth.

<u>Fixed Mesh</u> - Fully Hunting
107/29 = (1 x 107)/(1 x 29)
Highest common factor is 1 and mesh hunts every tooth.

<u>Output Mesh</u> - Partially Hunting
129/51 = (1 x 3 x 43)/(1 x 3 x 17)
Highest common factor is 3 and mesh hunts every 3rd tooth.

Where quietness and wear resistance is emphasized, the benefits of hunting tooth combinations apply to all gear trains regardless of whether they are epicyclic or not. Both the high speed helical input stage and the spiral bevel intermediate stage of the 85G1-1 transmission have fully hunting tooth combinations.

Planet Indexing

As noted in Equation 5 on page 24, to assemble a three-mesh compound planetary, a certain physical relationship between the planet gear teeth on each spindle and between the mating gears must be adhered to. It can be seen that in epicyclic gear designs which have no common factors between the mating gear teeth and between the number of planets being used, the radial relationship of the gear teeth on the various planets will produce fractional teeth in engagement at given spindle locations. For example, the subject spindle gear assembly contains three planet gears which have 68 teeth, 29 teeth, and 51 teeth. Each tooth on the 68-tooth planet has a different radial relationship relative to the 29-tooth planet and to the 51-tooth planet. Thus, an indexing and timing relationship among the three planet gears and among the four spindles is required. This timing relationship can be achieved by arbitrarily selecting one tooth valley of a planet gear and aligning it very accurately to a tooth valley of each of the other two planets. See Figure 10. With the three planet gears precisely aligned on each spindle, the orientation of the four spindles can now be addressed. When Equation 5 is satisfied, the question of proper spindle orientation is answered.

To further illustrate the assembly and the meshing requirements, a numerical solution which represents the final design of the subject SABP unit is presented. In response to Equations 1 and 2 above, the following numerical relationships can be noted in Table 4.

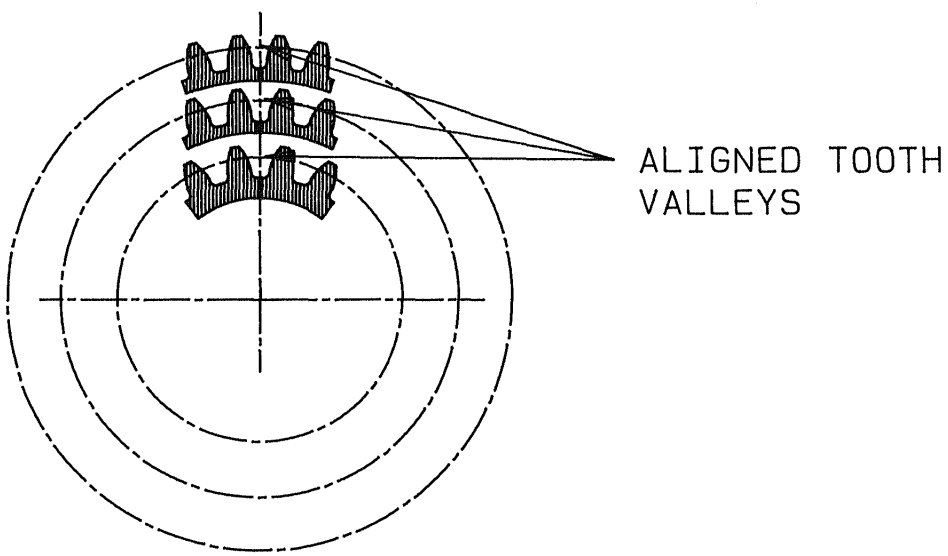

FIGURE 10 - ALIGNMENT OF PLANET GEARS ON SPINDLE GEAR ASSEMBLY

TABLE 4

SIMPLE PLANETARY MESHING REQUIREMENTS

	INPUT MESH	FIXED MESH	OUTPUT MESH
Sun Gear	36	(49)*	(27)*
Planet Gear	68	29	51
Ring Gear	(172)*	107	129
Equation 1 R = S + 2P	36 + (2)(68) = 172	49 + (2)(29) = 107	27 + (2)(51) = 129
Equation 2 (R + S)/n = i	((172) + 36)/4 = 52	(107 + (49))/4 = 39	(129 + (27))/4 = 39

* Denotes a dummy gear which would be required to complete a planetary gear train in each mesh plane.

<u>Equation 3</u>: $[(P)(R) + (P)(S)]/n = i$

First Compound: $[(68)(107) + (29)(36)]/4 = 2080$ OK

Second Compound: $[(68)(129) + (51)(36)]/4 = 2652$ OK

<u>Equation 4</u>: $D_R = D_S + D_{P1} + D_{P2}$

First Compound: $10.7 = 2.7 + 5.1 + 2.9$
$10.7 = 10.7$ OK

Second Compound: $12.9 = 2.7 + 5.1 + 5.1$
$12.9 = 12.9$ OK

<u>Equation 5</u>: $J = [(i)(P)]/n \pm (G)/(n)$

By definition, for a four-planet system, "i" can have a value of 1, 2, 3, or 4. As can be noted from Table 5 for this specific design, i = 3 is the only condition which satisfies the requirements of Equation 5.

TABLE 5

THREE-STAGE COMPOUND PLANETARY MESHING REQUIREMENTS

i	Mesh	[(i)(P)]/n + (G)/(n)	Remarks
1	Input	[(1)(68)]/4 + (36)/(4) = 26	N.G.
	Fixed	[(1)(29)]/4 - (107)/(4) = -19.5	
	Output	[(1)(51)]/4 - (129)/(4) = -19.5	
2	Input	[(2)(68)]/4 + (36)/(4) = 43	N.G.
	Fixed	[(2)(29)]/4 - (107)/(4) = -12.25	
	Output	[(2)(51)]/4 - (129)/(4) = -6.75	
3	Input	[(3)(68)]/4 + (36)/(4) = 60	OK
	Fixed	[(3)(29)]/4 - (107)/(4) = -5	
	Output	[(3)(51)]/4 - (129)/(4) = 6	
4	Input	[(4)(68)]/4 + (36)/(4) = 77	N.G.
	Fixed	[(4)(29)]/4 - (107)/(4) = 2.25	
	Output	[(4)(51)]/4 - (129)/(4) = 18.75	

Like any planetary gear arrangement, as the spindle gear assembly orbits around the sun gear and within the ring gear, it rotates about its own axis in a direction opposite to that in which it is orbiting. This is illustrated by Figure 11 which shows a planet gear orbiting within a mating ring gear.

The significance of the integer "i" in Equation 5 is that it defines the amount of opposite rotation required by each planet gear for proper meshing with its mating gear. The amount of opposite rotation must be the same for all three planet gears since they are physically connected together, i.e. "i" must be the same for all three meshes.

As shown by Figure 11, when the planet gear orbits by 1/4 of a revolution (90°) with respect to its mating gear, it must for i = 3, rotate 3/4 of a revolution (270°) around its own axis in the opposite direction to maintain proper meshing.

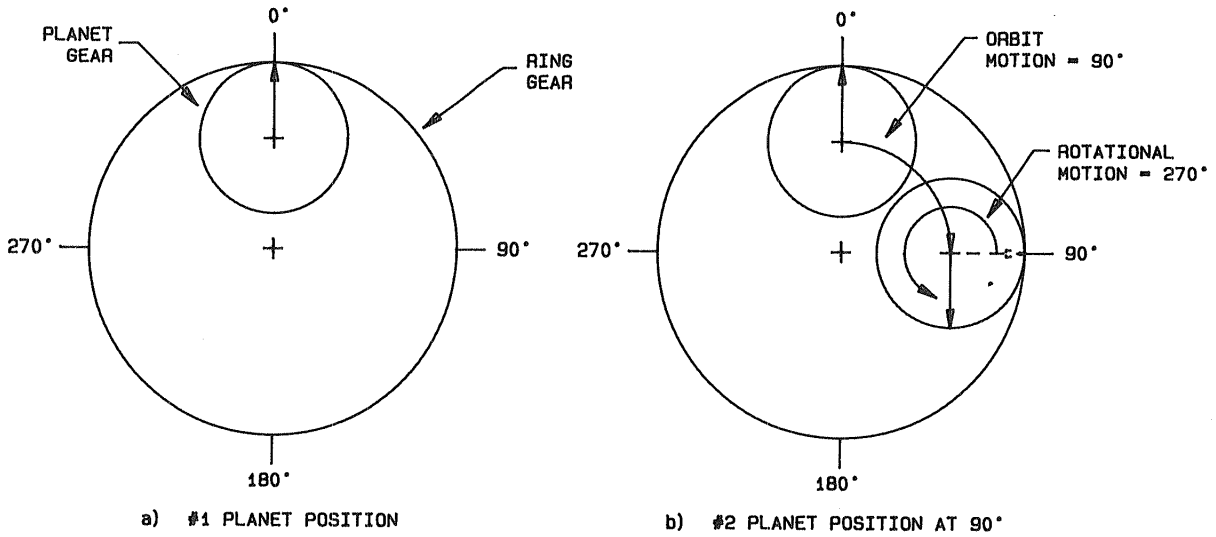

FIGURE 11 - SABP PLANET GEAR INDEXING

Figure 12 shows the progressive orientation of the spindle gear assembly as it orbits within the two mating ring gears. For an equal spindle spacing using four spindles, the spindles are set at 90° apart. If the 0° location is where the spindle gear tooth valleys coincide with the mating sun and ring gear teeth then at each other location (90°, 180°, and 270°), the fraction of a gear tooth in mesh <u>must</u> match the fraction of a mating valley. Table 4 shows this relationship.

TABLE 6

ALIGNMENT OF FRACTIONAL GEAR TEETH

MESHING TEETH/VALLEYS

LOCATION	INPUT MESH		FIXED MESH		OUTPUT MESH	
	SUN S	PLANET P	FIXED RING Rf	PLANET Pf	OUTPUT RING Ro	PLANET Po
90	(1/4)(36) 9	(3/4)(68) 51	(1/4)(107) 26.75	(3/4)(29) 21.75	(1/4)(129) 32.25	(3/4)(51) 38.25
180	(2)(1/4)(36) 18	(2)(3/4)(68) 102 102 - 68 34	(2)(1/4)(107) 53.50	(2)(3/4)(29) 43.50 43.50 - 29 14.50	(2)(1/4)(129) 64.50	(2)(3/4)(51) 76.50 76.50 - 51 25.50
270	(3)(1/4)(36) 27	(3)(3/4)(68) 153 153-(2)(68) 17	(3)(1/4)(107) 80.25	(3)(3/4)(29) 65.25 65.25-(2)(29) 7.25	(3)(1/4)(129) 96.75	(3)(3/4)(51) 114.75 114.75-(2)(51) 12.75

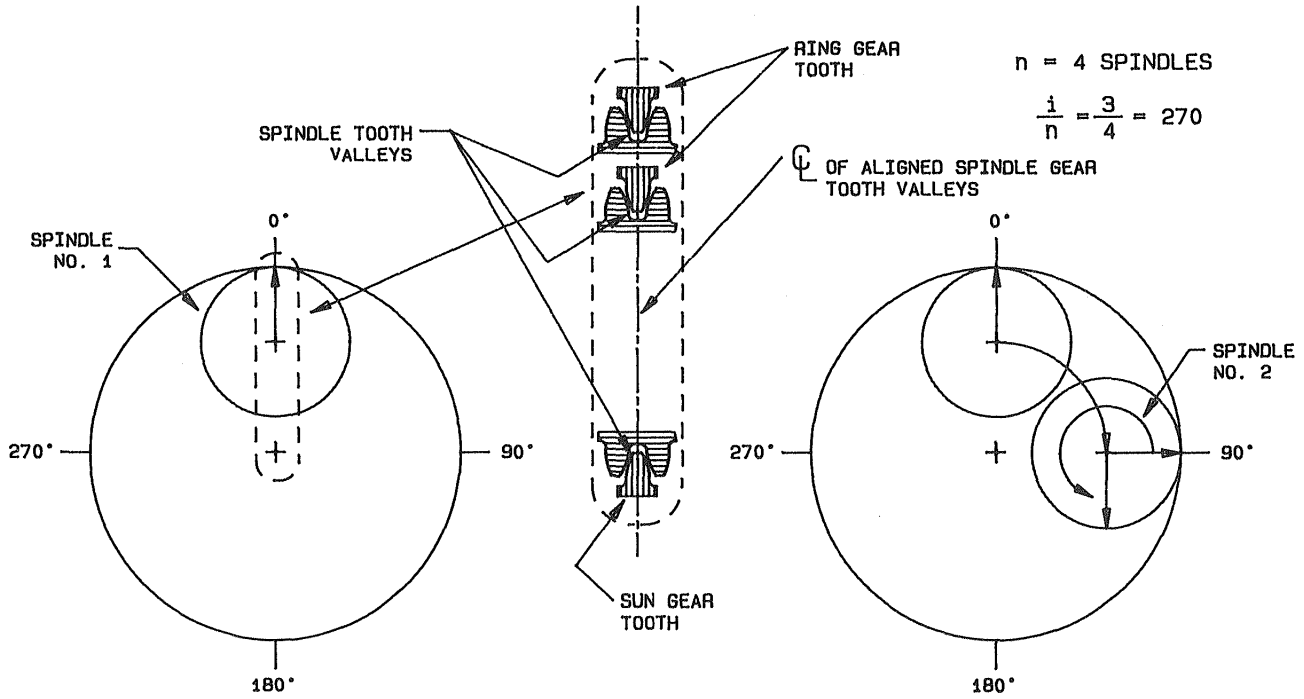

POSITION #1
THE VALLEYS OF THE ALIGNED GEAR TEETH ARE ARBITRARILY SET POINTING UP

POSITION #2
RELATIVE TO SPINDLE NO. 1, SPINDLE NO. 2 IS POSITIONED 90° CW AND ROTATED 270° CCW. THE VALLEYS OF ALIGNED GEAR TEETH ARE NOW POINTING DOWN.

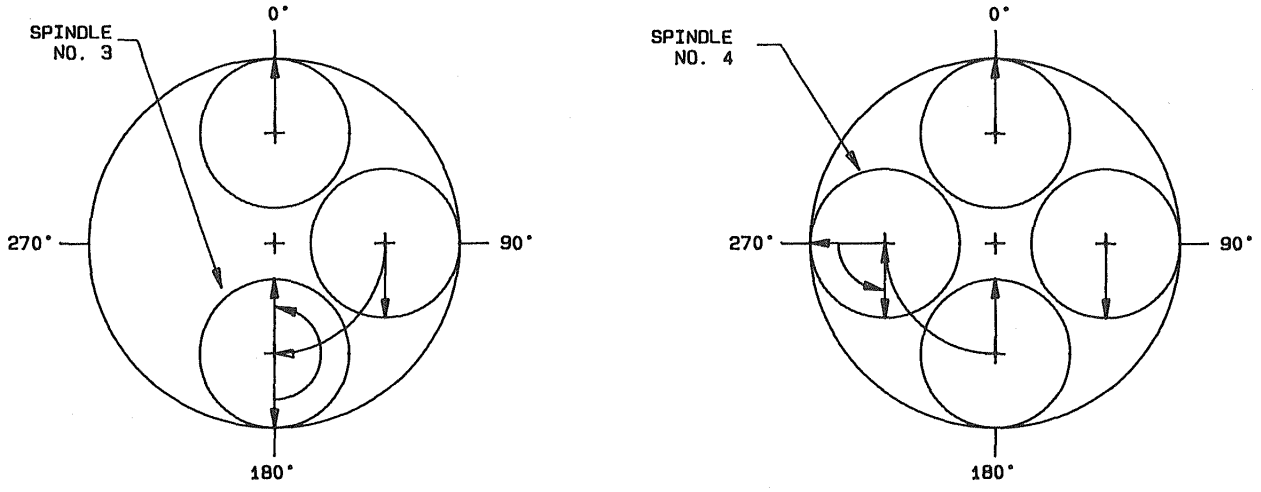

POSITION #3
RELATIVE TO SPINDLE NO. 1
SPINDLE NO. 3 IS POSITIONED 180° CW AND ROTATED (i/n) (2) = (3/4) (2) = 1 1/2 TURNS CCW OR 540°. THE VALLEYS OF THE ALIGNED TEETH ARE POINTING UP.

POSITION #4
RELATIVE TO SPINDLE NO. 1
SPINDLE NO. 4 IS POSITIONED 270° CW AND ROTATED (i/n) (3) = (3/4) (3) = 2 1/4 TURNS CCW. THE VALLEYS OF THE ALIGNED TEETH ARE POINTING DOWN.

FIGURE 12 - PLANET POSITIONING

Thus for example, taking spindle gear location No. 2 at 90° into consideration, it can be noted from Table No. 6 that sun (S) tooth number 9 aligns with planet (P) valley number 51 and the fractional fixed ring gear (R_f) tooth number 26.75 aligns with fractional planet (P_f) valley number 21.75. Similarly, the fractional output ring gear (R_o) tooth number 32.25 aligns with the fractional planet (P_o) tooth valley number 38.25. Similar alignment can be seen for spindle numbers 3 and 4.

It can also be noted from Figure 12 that for spindle positions No. 1 and No. 3, the marked tooth valleys of the two spindles are oriented toward the top of the page and for spindles No. 2 and No. 4, they are pointing toward the bottom of the page. Thus, it can be seen that a simple spindle assembly fixture can be made and used to orient each spindle in the proper direction and hold it in that position during the assembly of the mating gears.

For informational purposes and to further illustrate the significance of the integer "i", Figure 13 shows the four different orientations of a four-planet system, where because of different possible combinations of numbers of teeth, "i" might be equal of 1, 2, 3, or 4. Note that where "i" is equal to four, the gear system is fully factorizing, i.e., the meshing condition of each planet is identical at any instant in time. For each of the four possible orientations, a simple fixture can be used for assembly purposes. Also note that in the case where "i" is equal to 1, for each incremental location of the spindle gear assembly around its mating gears, it is rotated an equivalent amount around its own axis for proper meshing. The result is that all of the spindle gears are oriented in the same direction, i.e., all "pointing north" as shown in Figure 13.

4.2 Gears

4.2.1 Main Gearbox

The gearing arrangement for the main gearbox consists of a high speed single helical input stage, a spiral bevel gear intermediate stage, and a four-planet SABP output stage. The high speed helical mesh was chosen to eliminate the need to expose a bevel gear set to the engine input speed requirement of 35,350 rpm.

The design requirement for high gear tooth contact ratio was selected to be a minimum of three. Accordingly, gear meshes in the gearbox have a calculated total contact ratio of more than three.

From past studies of SABP configurations, it has been determined that the optimum gear ratio for the design of a simple SABP gear module should be within the range of 15 to 25 to 1. Three, four, and five spindle configurations were studied. The three spindle system lends itself to higher ratios, but it requires

GENERAL EQUATION: $J = iP/n +- G/n$

$n = 4$

$i = 1, 2, 3, 4$

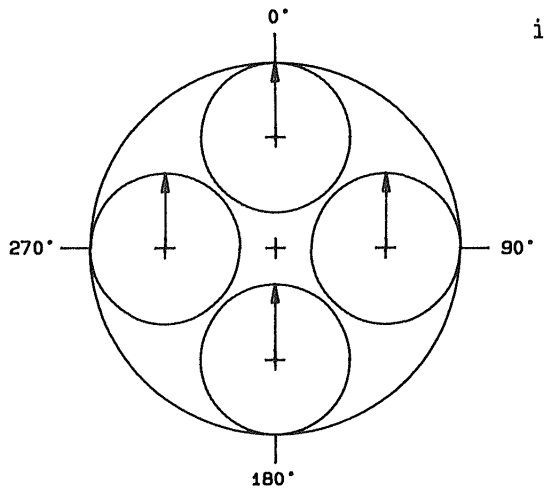

i = 1
INDEX 1/4 TURN

(a)

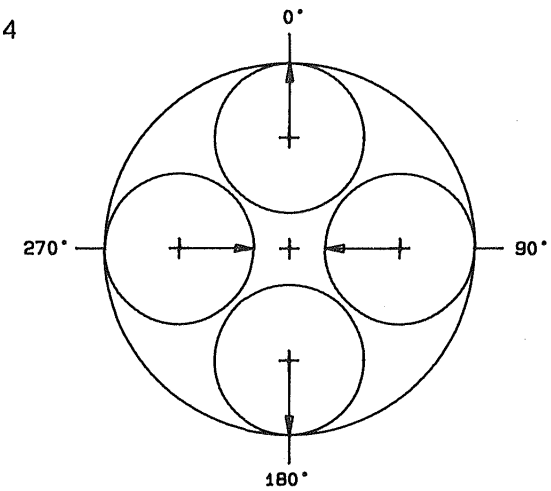

i = 2
INDEX 2 x 1/4 TURN

(b)

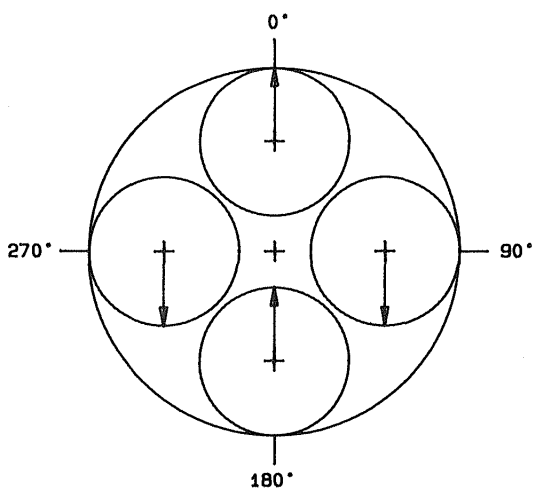

i = 3
INDEX 3 x 1/4 TURN

(c)

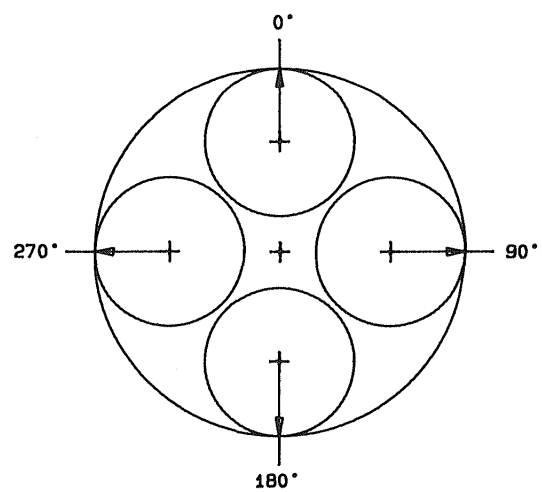

i = 4
INDEX 4 x 1/4 TURN
(Fully Factorizing)

(d)

FIGURE 13 - FOUR-PLANET INDEXING SYSTEMS

more space with less gear teeth sharing the load. The five planet system divides the load among more meshes, but it is more suitable for lower ratios. A four planet configuration was selected for the design as it provides good load sharing and space utilization and also provides for a reasonably high gear ratio. The SABP configuration of the subject gearbox has a gear ratio of 17.3737 to 1. This ratio coupled with a 71/37 tooth bevel gear set and a 70/23 tooth helical input gear mesh set provides an overall gear ratio of 101.46 to 1. Therefore, the engine speed of 35,350 rpm is reduced to 348 rpm at the helicopter rotor.

Preliminary analysis of the bevel gear set by TTC indicated that finer pitch gears than would normally be selected should be used to obtain high contact ratio and smooth, quiet operation. A diametral pitch in the range of 8 to 10 seemed to be desirable. This analysis was coordinated with several spiral bevel gear manufacturers. One potential gear manufacturing company performed a detailed analysis to further optimize the design and ultimately selected a 71/37 tooth gear set with a diametral pitch of 9.1026.

Three computer programs were used to assist in performing the various analyses for the helical gear stages. The first of these is a program licensed from Geartech Software, Inc. entitled "AGMA218." "AGMA218" is a computer program for rating gears per the American Gear Manufacturers Association's Standard, entitled "AGMA Standard for Rating the Pitting Resistance and Bending Strength of Spur and Helical Involute Gear Teeth," AGMA 218.01, December 1982.

AGMA Standard 218.01 is a complicated and sometimes confusing document. Rating gearsets by hand using this standard can be a slow, frustrating, and error-prone process. The "AGMA218" computer program is designed to eliminate this frustration and to greatly increase the individual productivity of the user of the standard. It assists in the iterative gearbox design process as it allows the user to rapidly rate a gearset under evaluation in the design.

"AGMA218" performs two basic types of analyses:

(a). Life Rating--given the transmitted horsepower and pinion speed, the pitting life and bending fatigue lives are calculated.

(b). Power Rating--given the pinion speed and a required design life, the allowable transmitted horsepower based on gear tooth pitting and bending fatigue are calculated for both the pinion and the gear. The allowable power rating of the gearset is the minimum value of the power capacities calculated.

A life analysis run on "AGMA218" presents the complete data for a pair of meshing gears. The analysis includes the following:

Input Data Summary
Geometry Summary
Load Summary
Derating Factor Summary
Strength Summary
Stress Summary
Life Rating Summary

Table 7 below, summarizes the results of the "AGMA218" program life analysis for the gears of the main gearbox using a design rating of 450 HP.

TABLE 7

SUMMARY OF STRESS LEVELS AND LIFE -- MAIN GEARBOX

	GEAR MESH				
	HIGH SPEED	SPIRAL BEVEL	SABP INPUT	SABP FIXED	SABP OUTPUT
Pitch Line Velocity - V (fpm)	14,452	11,706	3,737	2,131	3,737
Combined Derating Factor - K(D)	1.316	1.911	1.316	1.250	1.250
Bending Stress - St (psi)	43,500	18,100	37,000	58,000	59,000
Compressive Stress - Sc (psi)	155,000	126,500	121,700	120,000	88,000
Bending Fatigue Life @ 99% Reliability (hours)	5.14 x 10^12	Infinite	4.2 x 10^16	5.1 x 10^6	1.6 x 10^6
Durability (Pitting) Life @ 99% Reliability (hours)	2.59 x 10^8	Infinite	3.5 x 10^12	3.2 x 10^13	3.0 x 10^19

The second computer program is also licensed from Geartech and is entitled "Scoring +." It is a program which performs a complete analysis of the tribology of spur and helical gearsets, both external and internal. In addition, "Scoring +" calculates and reports all the gear geometry necessary to completely define the gearset.

All the known parameters controlling pitting, scoring (scuffing), and wear of gear teeth are considered:

-- Elastohydrodynamic (EHD) film thickness
-- Flash temperature
-- Specific (slide/roll) sliding ratios
-- Hertzian contact stress

A "Scoring+" program analysis presents the following:

Input Data Summary
Geometry Summary
Load/Derating Factor Summary
Materials/Lube Data Summary
Rating Summary
V_{ss}, h_{min} T_c, etc. at five (5) reference points along the tooth profile
Rolling & Sliding Velocities
Flash Temperature & Film Thickness

The "Scoring+" program also provides graphical displays of output data. Figure 14a shows a plot of elastohydrodynamic (EHD) film thickness, with axes for both actual (micro-in) and specific film thickness (lambda), and an indication of the probability of wear.

The program calculates the EHD film thickness using the Dowson and Higginson equation, which accounts for the exponential increase of lubricant viscosity with pressure, geometry and velocity of the gear teeth which entrains the lubricant into the contact, elastic properties of the gear materials, and the transmitted load.

The program also uses the empirical data of Wellauer and Holloway to assess the probability of wear-related distress.

The Flash Temperature plot of Figure 14b shows gear tooth total temperature versus pinion roll angle and the calculated probability of scoring.

The program calculates flash temperature using Blok's critical temperature theory, the best criterion for predicting scoring (scuffing). This theory states that scoring will occur in gear teeth that are sliding under boundary lubricated conditions when the maximum surface temperature of the gear teeth reaches a critical magnitude:

$$T_c = T_b + T_f$$

where:

T_c = total maximum conjunction temperature.
T_b = equilibrium bulk temperature of the gear teeth.
T_f = instantaneous flash temperature rise.

The influence of the surface roughness of the gear teeth (per the Kelley equation) and the effects of load sharing, tooth profile tip and root relief, and pinion vs. gear driving per AGMA 217.01 are also included.

The chart of Figure 14c results from a kinematic analysis of gear tooth velocities. It shows the specific sliding ratio (V_{ss}) versus the pinion roll angle and reports both the maximum value and maximum slope of these curves.

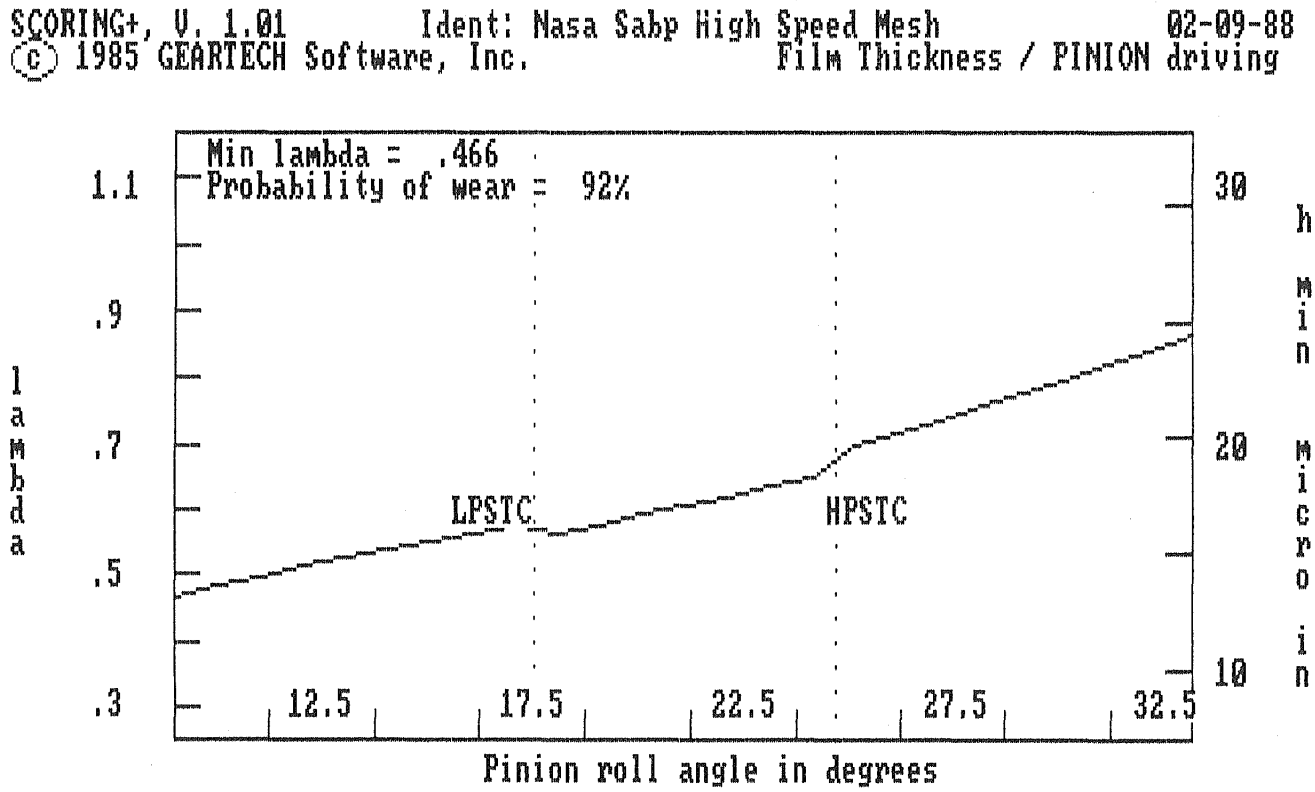

(a)

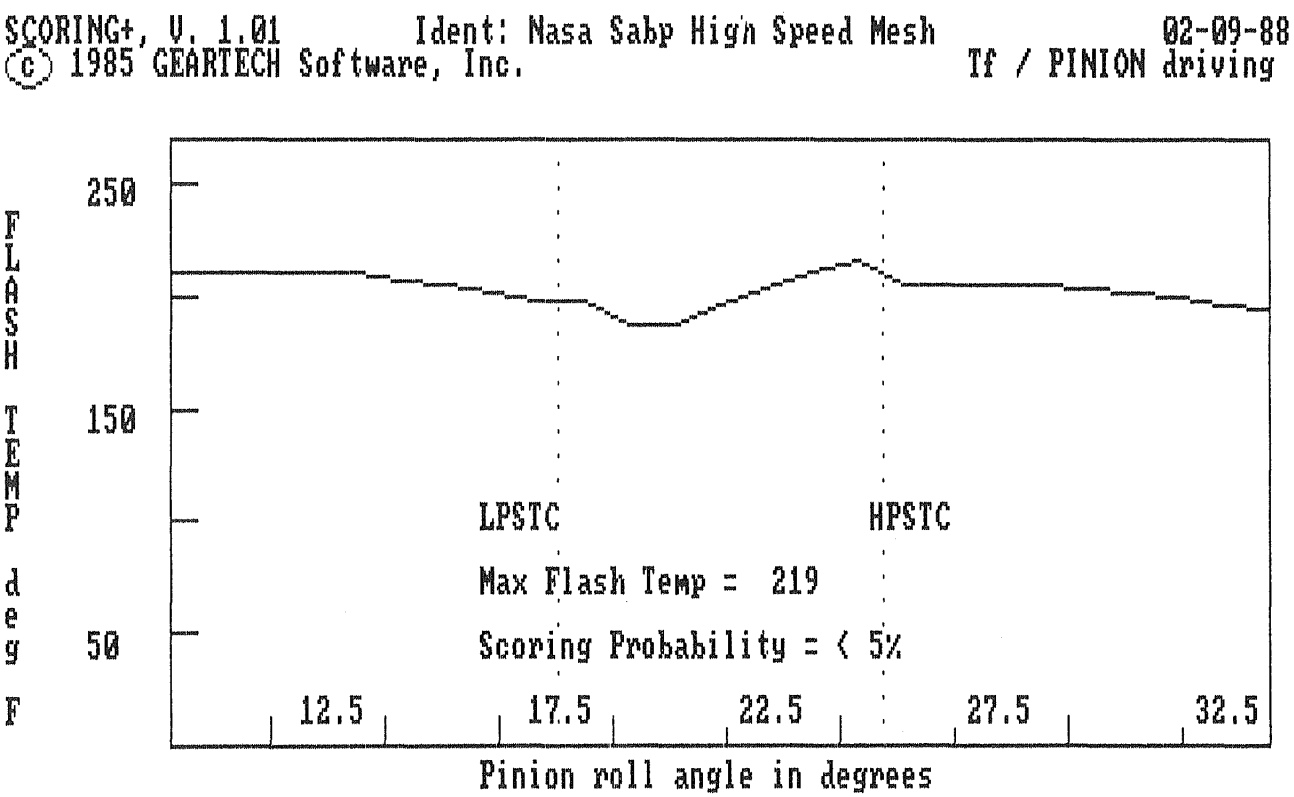

(b)

FIGURE 14 - SAMPLE PLOTS OF "SCORING+" PROGRAM OUTPUT DATA

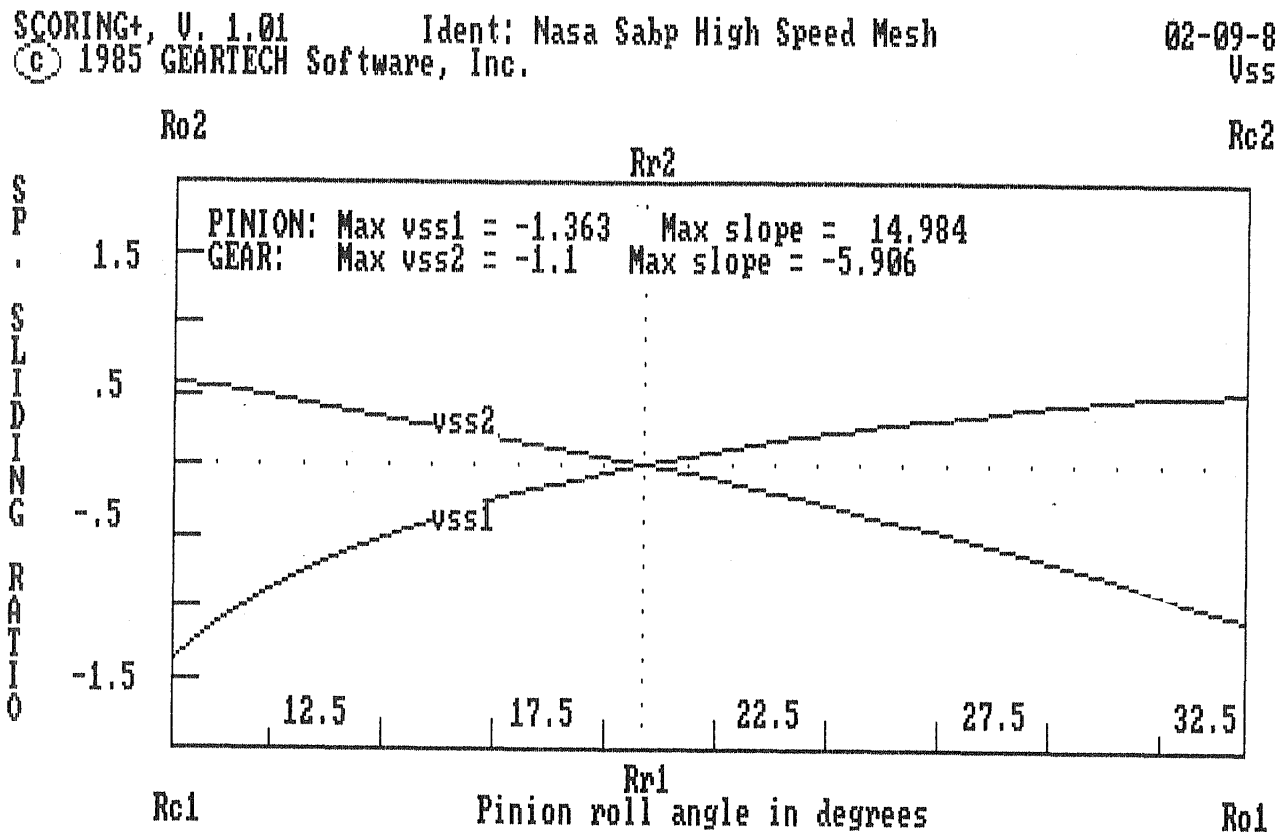

(c)

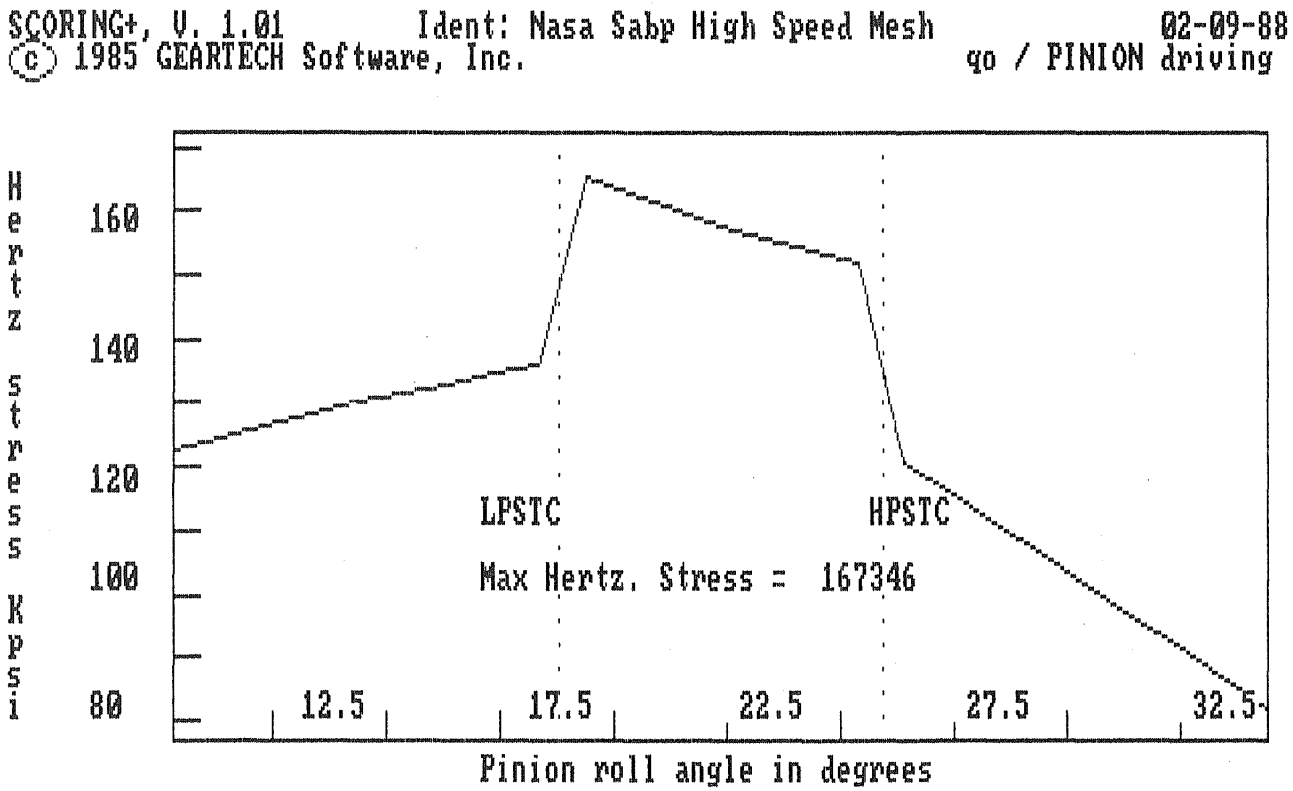

(d)

FIGURE 14 - SAMPLE PLOTS OF "SCORING+" PROGRAM OUTPUT DATA (Cont'd.)

Additional supporting data in the tabular output includes:

V_r = rolling velocities or speeds at which freshly cooled tooth surface enters the conjunction.

V_s = sliding velocity which shears the oil film, thereby generating frictional power loss and creating the flash temperature rise.

V_e = entraining velocity which draws oil into the conjunction and increases the EHD film thickness.

V_{ss} = specific sliding (slide/roll) ratio which relates the tooth sliding and rolling components and measures the frictional energy input.

Figure 14d is a plot of the Hertzian contact stress versus pinion roll angle. It not only gives the maximum stress but also shows where it occurs on the pinion tooth profile.

All of the helical gear meshes of the main gearbox showed satisfactory characteristics as a result of the "Scoring+" analysis with less than a 5% probability of scoring.

The third computer program used for gearing analysis was developed at TTC. The program generates dimensions for gear geometry. These dimensions are the basis for the gear data block on the detail drawing. Table 8 shows a typical gear dimension sheet for the high speed helical gear mesh. It shows the actual dimensions and the corresponding dimensions based on a diametral pitch of one.

The TTC program also allows for accurately plotting the gear tooth profiles on a one diametral pitch basis. Figure 15a shows the profile for the 23-tooth pinion and Figure 15b shows the profile for the mating 70-tooth gear.

The output and the fixed ring gears of the SABP were also analyzed for deflections under load. These analyses are presented in the following Section 4.2.2.

TABLE 8

TYPICAL GEAR DIMENSION SUMMARY

Gear Dimensions
6/27/85

	PINION	GEAR
	ACTUAL / ONE	ACTUAL / ONE
Number of Teeth	23	70
Diametral Pitch	14.728100/ 1.000000	14.728100/ 1.000000
Pressure Angle	20.000000	20.000000
Pitch Diameter/Radius	1.561641/11.500000	4.752819/35.000000
Form Diameter/Radius	1.485234/10.937340	4.638290/34.156597
Addendum	0.075200/ 1.107553	0.049600/ 0.730514
Dedendum	0.095056/ 1.400000	0.095056/ 1.400000
Tooth Thickness	0.106653/ 1.570796	0.106653/ 1.570796
Base Diameter/Radius	1.467462/10.806465	4.466189/32.889242
Root Diameter/Radius	1.371528/10.100000	4.562707/33.600000
Root Diameter Min Metal/Radius	1.366528/10.063180	4.557707/33.563180
Out or In Diameter/ Radius	1.712041/12.607553	4.852019/35.730514
Center Distance	3.157230/46.500000	
2 * CD =	6.314460/93.000000	
Minimum Contact Ratio	1.542287	
Thickness at Out or In	0.040017/ 0.589370	0.069306/ 1.020751
Space at Form Diameter	0.81154/ 1.195251	0.067472/ 0.993733
Minimum Fillet Radius	0.026095/ 0.384328	0.021972/ 0.323602
Radius to Center Fillet	0.709359/10.447508	2.300825/33.886782
Angle to Center Fillet	0.126672	0.042503
Delta Addendum	0.000000	0.000000

NO. TEETH 23

DIAMETRAL PITCH	ONE	14.72810
PRESSURE ANGLE	20.00000	
OUTSIDE RAD	12.50000	0.84872
PITCH RAD	11.50000	0.78082
FORM RAD	10.85457	0.73700
M.M. ROOT RAD	10.06318	0.68326
MIN FILLET RAD	0.40606	0.02757
TOOTH THK	1.57080	0.10665
BASE RAD	10.80647	0.73373

2/20/88

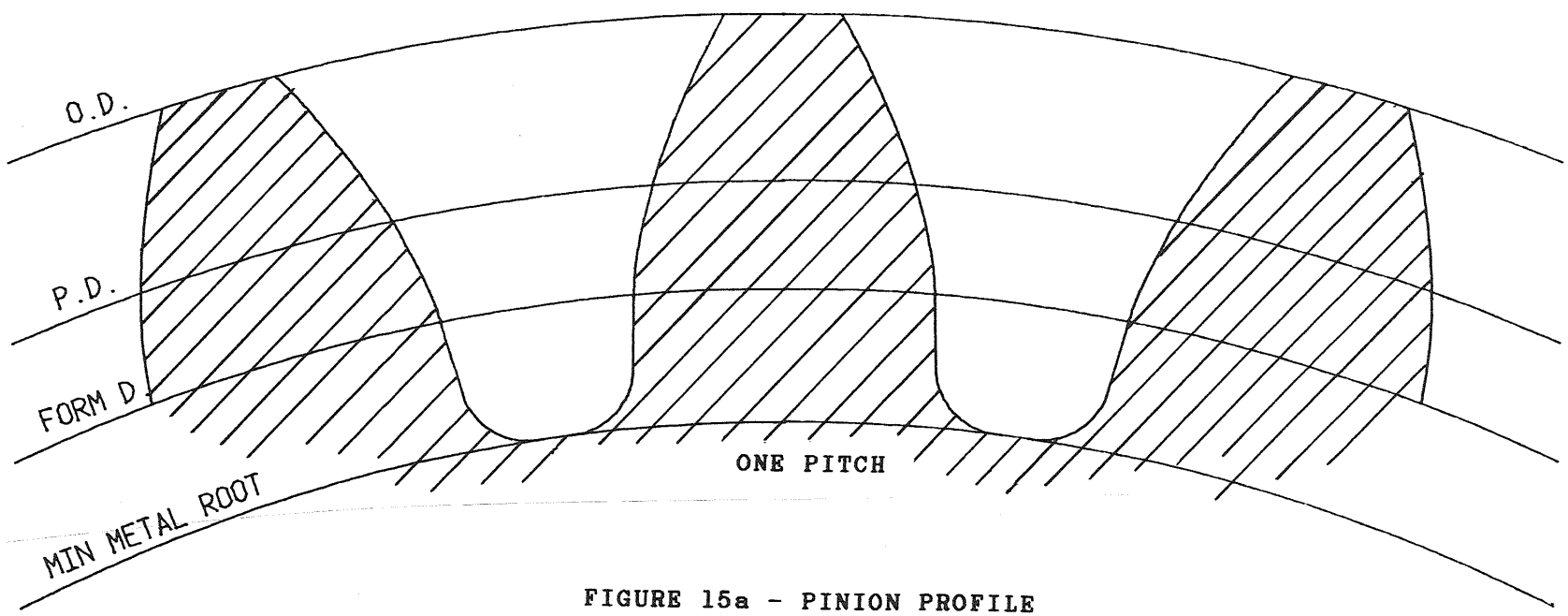

FIGURE 15a - PINION PROFILE

NO. TEETH 70

DIAMETRAL PITCH	ONE	14.72810
PRESSURE ANGLE	20.00000	
OUTSIDE RAD	36.00000	2.44431
PITCH RAD	35.00000	2.37641
FORM RAD	34.21297	2.32297
M.M. ROOT RAD	33.56318	2.27885
MIN FILLET RAD	0.32145	0.02183
TOOTH THK	1.57080	0.10665
BASE RAD	32.88924	2.23309

2/20/88

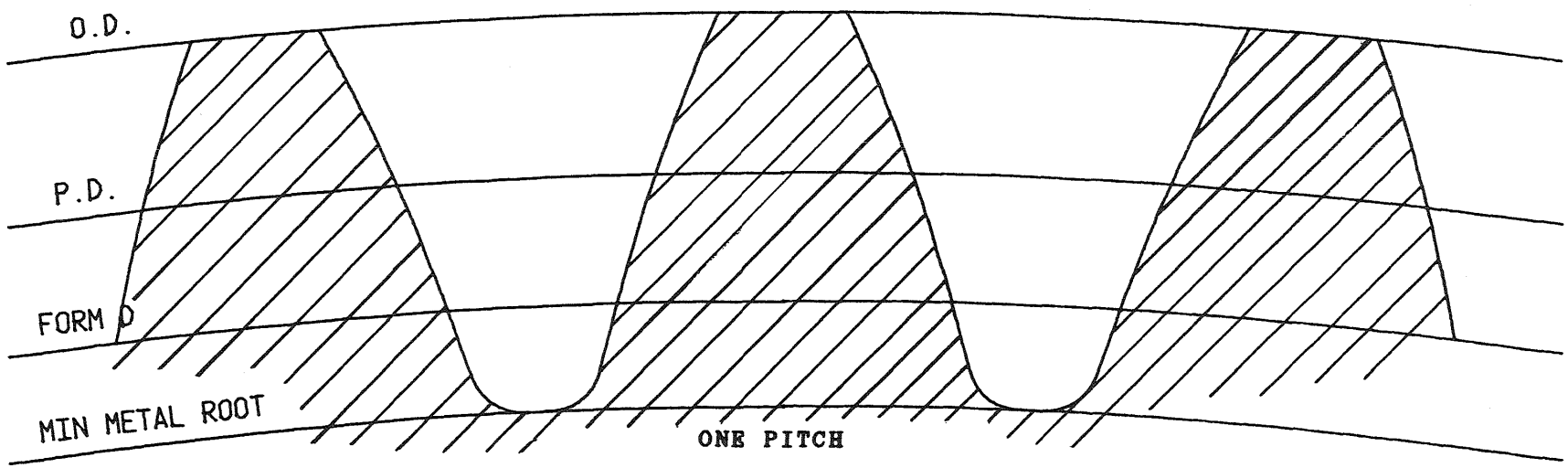

FIGURE 15b - GEAR PFOFILE

4.2.2 SABP Ring Gear Deflections

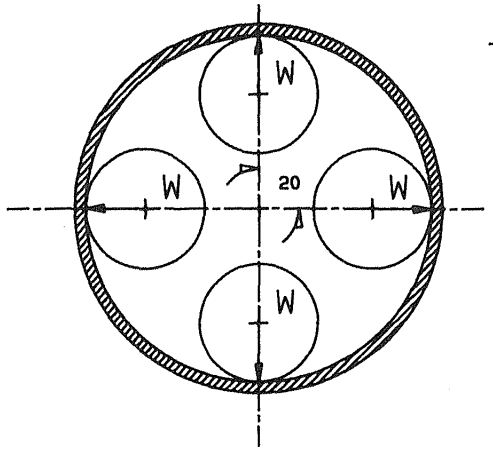

OUTPUT RING GEAR

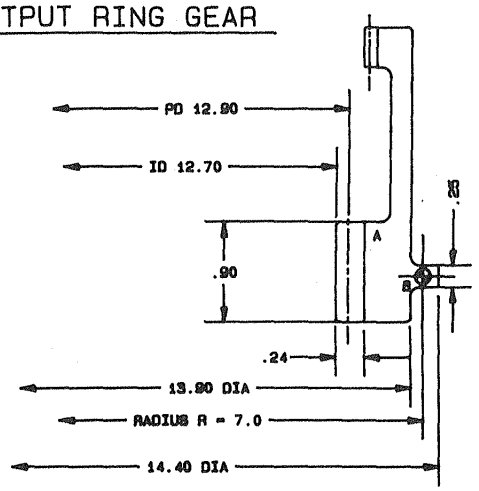

RADIAL DISPLACEMENT AT EACH LOAD POINT --- OUTWARD

$$\delta = \frac{WR^3}{2EI}\left[\frac{1}{S^2}\left(\frac{1}{2}\theta + \frac{1}{2}SC\right) - \frac{1}{\theta}\right]$$

$$\delta = \underbrace{\frac{(1150)\ (7.0)^3}{(2)\ (E)\ (.0183)}}_{.359}\ \underbrace{\left[\frac{1}{.707^2}\left(\frac{.7854}{2} - \frac{.707^2}{2}\right) - \frac{1}{.7854}\right]}_{.0119} = \underline{\underline{.0042}}$$

RADIAL DISPLACEMENT AT EACH LOAD POINT --- INWARD

$$\delta = \frac{WR^3}{4EI}\left[\frac{2}{\theta} - \frac{1}{S} + \theta\frac{C}{S^2}\right]$$

$$\delta = \underbrace{\frac{(1150)\ (7)^3}{(4)\ (E)\ (.0183)}}_{.179}\ \underbrace{\left[\frac{2}{.7854} - \frac{1}{.707} - \frac{(.7854)\ (.707)}{.707^2}\right]}_{.0211} = \underline{\underline{.0038}}$$

	AREA	y COORDINATE OF CENTROID	M_X
A	.5000	.25	.125
B	.0625	.625	.039
	.5625		.164

$$I_A = \frac{(.9)\ (.5)^3}{12} + (.5)\ (.041)^2 = .0102$$

$$I_B = \frac{.25^4}{12} + (.0625)\ (.33)^2 = .0071$$

$$\bar{Y} = \frac{\Sigma M_X}{\Sigma A} = \frac{.164}{.5625} = .291$$

θ = .7854 radians
S = SIN θ = .707
C = COS θ = .707

WHERE:

W = SEPARATING TOOTH LOAD 1150 lbs.

δ = RADIAL DISPLACEMENT

FILE - 0126 RING GEAR DEFLECTIONS

FIXED RING GEAR

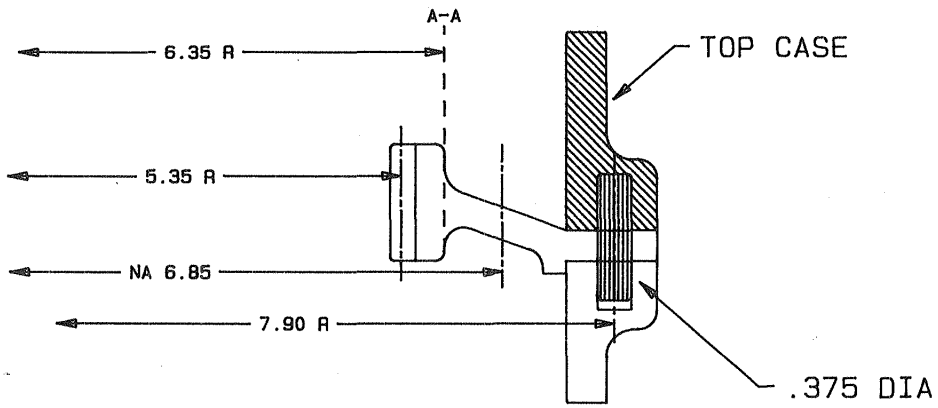

RADIAL DISPLACEMENT AT EACH LOAD POINT --- OUTWARD

$$\delta = \frac{WR^3}{2EI}\left[\frac{1}{S^2}\left(\frac{1}{S}\theta + \frac{1}{2}SC\right) - \frac{1}{\theta}\right]$$

$$\delta = \underbrace{\frac{(1465)\ (6.85)^3}{(2)\ (E)\ (.45)}}_{.0174}\ \underbrace{\left[\frac{1}{.707^2}\left(\frac{.7854}{2} + \frac{.707^2}{2}\right) - \frac{1}{.7854}\right]}_{.0122} = \underline{\underline{.00021}}$$

SHEAR SECTION @ A-A

$$f_s = \frac{P}{A} = \frac{13,567}{7.9} = \underline{\underline{1945}}\ \text{psi}$$

$$P = \frac{86,156}{6.35} = 13,567\ \text{lbs}$$

$$A = \pi dt = (\pi)\ (2)\ (6.35)\ (.2) = \underline{\underline{7.9}}$$

SEPARATING GEAR TOOTH LOADS = 1465 lbs

$$\text{FIXED RING GEAR TORQUE} = \frac{(4026)\ (4)\ (10.7)}{2} = 86,156\ \text{"\#}$$

$$\text{SHEAR FORCE ACTING ON EACH DOWEL PIN} = \frac{86,156}{7.9 \times 8} = 1363\ \text{lbs}$$

NOTE: THE FIXED RING GEAR IS APPROXIMATELY 20 TO 25 TIMES STIFFER THAN THE OUTPUT RING GEAR.

4.2.3 Accessory and Tail Rotor Drives

The accessory and tail rotor drive system as shown by Figure 2 was selected for design analysis. Although the test configuration of the transmission does not include these elements, the design phase was conducted to establish size and weight criteria. The transmission can then be treated as a modular unit which integrates all of the requirements for helicopter services beyond powering the main rotor shaft. In addition to providing a takeoff to drive the tail rotor, the system also drives a generator, two hydraulic pumps, a two-element oil pump, and a tachometer. The generator provides helicopter electrical services, the hydraulic pumps accommodate the needs of a powered flight control system, and the oil pump provides pressure and scavenge elements for a self-contained lubrication system.

The accessory and tail rotor drive system consists of a series of eight high contact ratio spur gears, all straddle mounted on ball bearings. A quill shaft from the 11,615 rpm shaft of the high speed mesh in the main gearbox drives the power takeoff gear of the accessory and tail rotor drive system. In a direct drive train, the power takeoff gear drives the generator takeoff shaft which in turn drives the tail rotor takeoff shaft. An auxiliary power takeoff shaft mounted on the generator takeoff shaft drives two auxiliary drive shafts, each through an idler gear. Each of these drive shafts has a double-ended mounting pad, the aft end pads are used for the hydraulic pumps, and the front end pads are used for the oil pump and tachometer.

Table 9 is a summary of the design data for the accessory and tail rotor drive system gears. It presents gear geometry data and the operating conditions at rated powers. It also shows allowable and operating stress levels for the most highly worked gears. The allowable compressive (Sac) and bending (Sat) stresses were calculated for the power takeoff gear using the number of cycles for 10,000 hours life and the life factor equation of AGMA 218.01. The same allowable stress was then used throughout the gear trains, with the other gears having less stringent operating requirements.

TABLE 9

GEAR DATA SUMMARY
ACCESSORY AND TAIL ROTOR DRIVES

	GEAR					
ITEM - See Figure 2	(a)	(b)	(c)	(d)	(e)	(f)
NAME	POWER TAKEOFF	GENERATOR DRIVE	TAIL ROTOR DRIVE	AUX. TAKEOFF	IDLER (2 ea.)	AUX. DRIVE (2 ea.)
N	29	53	81	29	41	43
Pd	16					
d	1.8125	3.3125	5.0625	1.8125	2.5625	2.6875
F	.9	.85	.45	.25	.30	.25
PHI	20 degrees					
Wt	659		497	120		60
Ca, Ka	1		1	1		1
Cs, Kv	.9		.9	.9		.9
Cs, Ks	1		1	1		1
Cm, Km	1.1		1.1	1.1		1.1
Cf	1		1	1		1
I	.10		.10	.09		.10
J	.43		.43	.43		.43
Torque	597	1,091	823	109		81
rpm	11,615	6,355	4,158	6,355	4,495	4,286
fpm	5,500			3,015		
Sac	170,000		170,000	170,000		170,000
Sat	54,000		54,000	54,000		54,000
Sc	168,181		120,108	94,349		76,845
St	36,060		51,370	11,349		11,163
FSc - Factor of Safety Compressive Stress	1.01		1.4	1.8		2.2
FSt - Factor of Safety Bending Stress	1.5		1.05	4.7		4.8

4.3 Bearings

The arrangement of bearings in the gearbox is shown schematically by Figure 16. The high speed helical pinion shaft, the high speed helical gear shaft, the bevel pinion shaft and the bevel gear shaft all have a similar bearing support arrangement. The arrangement consists of a duplex pair of ball bearings in conjunction with a cylindrical roller bearing. All the gears are straddle mounted to reduce deflections and to improve loading conditions at the mesh.

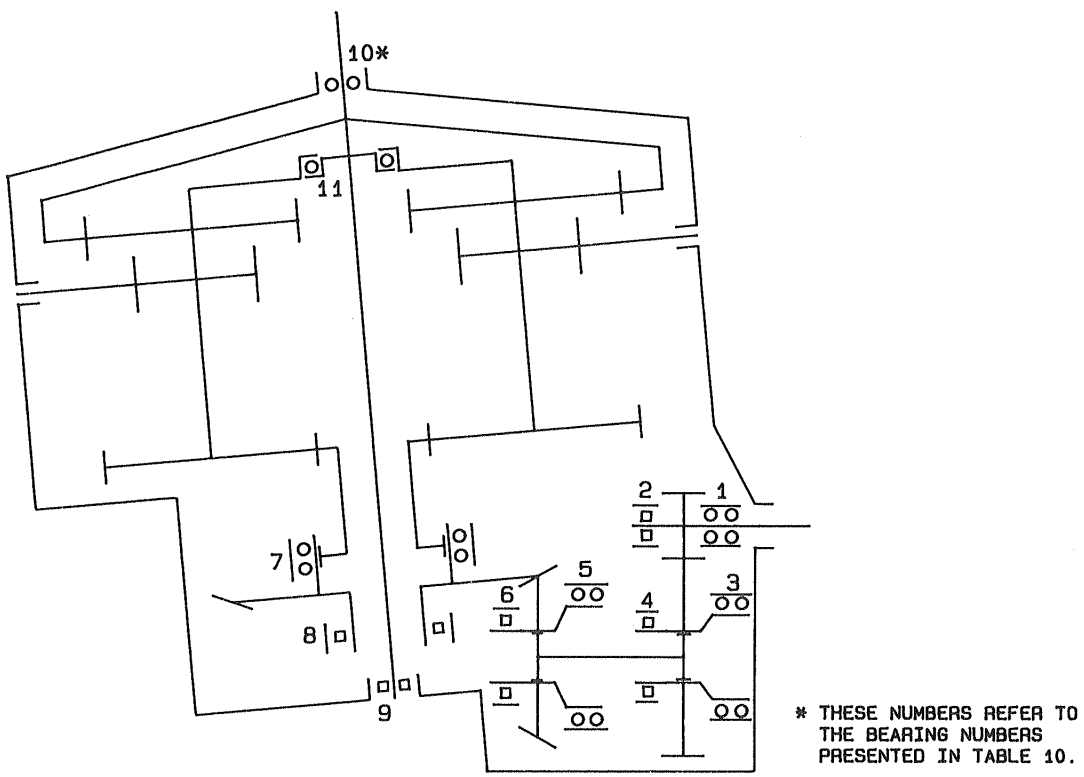

FIGURE 16 - BEARING ARRANGEMENT

The output shaft is supported by a lower cylindrical roller bearing and an upper single row ball bearing. A single row ball bearing is also provided from which the spindle gears are positioned and held axially in the assembly.

The high speed pinion bearings were sized somewhat on the basis of those used for the NASA high speed 500 HP test stand gearbox. Because of the high speed (35,350 rpm), these bearings should be ABEC-5 or ABEC-7. For low quantity, short-term prototype procurement, ABEC-5 or ABEC-7 roller bearings were not readily available, thus necessitating that lower class ABEC-3 bearings to be used in several areas for prototype testing.

Analysis of the bearings was conducted using published ratings. The results of this analysis are shown in the data summary of Table 10.

TABLE 10

BEARINGS - DATA SUMMARY

BEARING	LOCATION	SPEED (rpm)	SIZE	TYPE	PUBLISHED RATED LOAD CAPACITY (lbs.)	EQUIVALENT LOAD (lbs.)	LIFE EXPECTANCY AT FULL LOAD (Hours)	FACTOR REQUIRED
1	High Speed Pinion	35,350	305	Duplex, Face to Face	1,310	377	1,780	1.7
2			205	Cylindrical Roller	1,960	759	730	4.1
3	High Speed Gear	11,615	208	Duplex, Face to Face	1,920	857	1,450	2.1
4			208	Cylindrical Roller	4,150	657	32,000	—
5	Bevel Pinion		210	Duplex, Face to Face	2,090	1,204	675	4.4
6			205	Cylindrical Roller	1,960	908	1,300	2.3
7	Bevel Gear	6,053	116	Duplex, Face to Face	3,090	351	169,000	—
8			208	Cylindrical Roller	4,150	1,015	17,000	—
9	Output Shaft	348	206	Cylindrical Roller	3,025	1,000	118,000	—
10			1916	Single Row Ball	1,590	1,255	8,700	—
10*			1916	Single Row Ball	1,590	5,332	> 100	
11**	Spindle Support		035	Single Row Ball	610	136	>3,000	

*Test Condition
**Kaydon Size

Most of the bearings at the 35,350 rpm and 11,615 rpm shaft speeds need the application of some bearing life improvement factor to satisfy the specification's B_{10} life requirement of 3000 hours. The required factors are shown in Table 10. Published bearing life data and other work that has been done on helicopter type bearing life calculations and predictions have shown that with the selection of improved materials and control of other variables, such as processing, lubrication, etc., such life improvement factors can theoretically be greater than 10. Accordingly, it is not uncommon for designers of high performance helicopter transmissions to use life improvement factors ranging from 3 to 10 which make the factors listed in Table 8 very reasonable.

The 1916 size output shaft bearing is more than adequate for the design requirements of a helicopter application. However,

for test stand operation without rotor lift to oppose axial gear loads, the bearing sees a very high thrust load which severely limits its test stand life.

Generally, the low speed bearings are oversized for the design. This is due in part to procurement availability for the test hardware. For example, the 116 size duplex bearing was the only size available in a reasonable procurement time. The current parts list shows the following bearings selected for procurement:

Bearing No. (Table 10)	Part Number	Manufacturer/Class
1	305 HDM	Barden-ABEC 7
2 and 6	NU205MC3P6	Consolidated-ABEC 3
3	208 HDM	Barden-ABEC 7
4 and 8	NU208MC3P6	Consolidated-ABEC 3
5	210 HDM	Barden-ABEC 7
7	116 HDM	Barden-ABEC 7
10	1916 S	MRC
9	NU206MC3P6	Consolidated-ABEC 3
11	KB035XPO	Kaydon-Class 3

4.4 SABP Support Rings

All radial forces within the SABP portion of the subject gearbox are reacted via rolling support rings. The radial loads are a function of gear tooth separating loads and centrifugal forces. Three specific loading conditions were examined and were used to calculate the radial loads imparted on the roller rings. These conditions are 100% torque and zero speed, zero torque and 100% speed, and 100% torque and 100% speed. The resultant forces acting on the roller rings are summarized in Section 4.4.1.

The design of the roller rings is dictated by two primary criteria. First, the ring deflection must be kept to a minimum to maintain proper operating center distance. Second, the rolling contact surfaces must be designed so that the contact stresses are within the allowable limits for the material selected. Since the spindle rollers and the roller support rings are functionally identical to a roller bearing, the rollers were made from AMS6260 material, carburized and ground, and the rings from 52100 bearing steel. Sections 4.4.2 and 4.4.3 present typical calculations used for determining ring deflections and stresses.

4.4.1 Spindle Gear Load Analysis

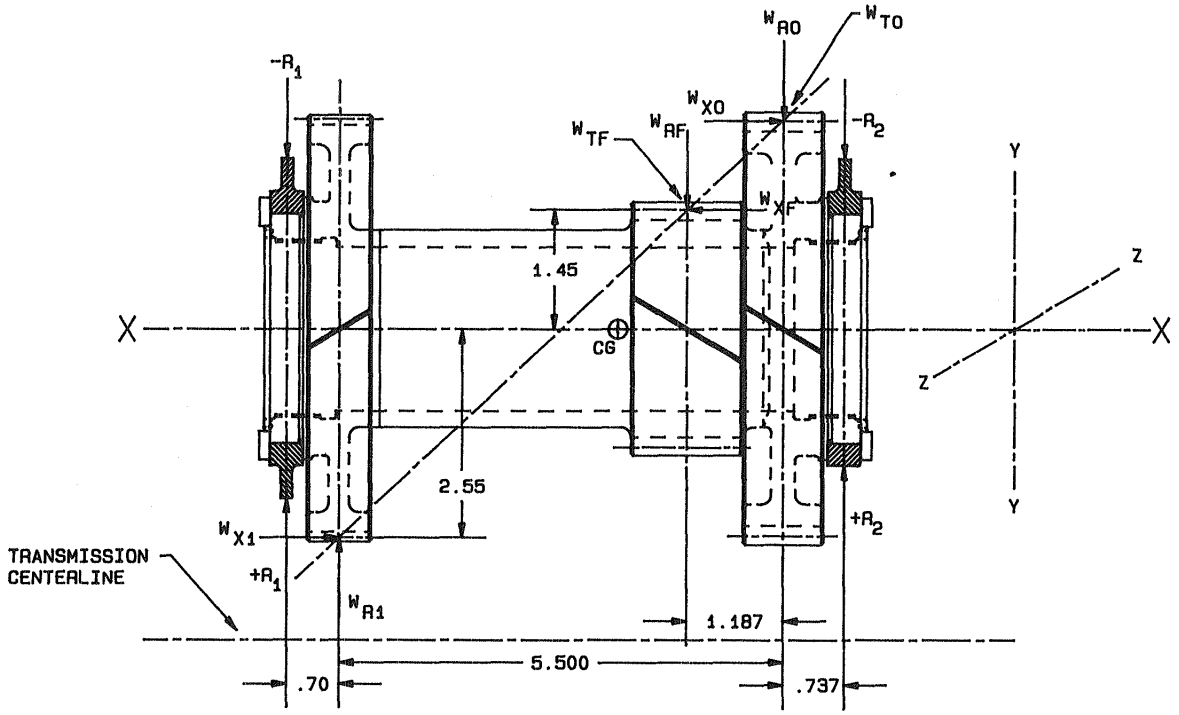

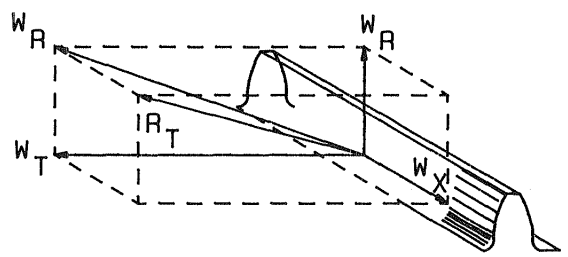

$R_1 = W_T \vdash\!\!\rightarrow W_R$

$R_T = W_T \vdash\!\!\rightarrow W_R$

W_T = TANGENTIAL LOAD (lbs)
W_R = RADIAL LOAD (lbs)
W_X = THRUST LOAD (lbs)
$R_1 R_2$ = ROLLER LOAD REACTION (lbs)

DESIGN CONDITIONS --- RATED POWER

	INPUT MESH - I	FIXED MESH - F	OUPUT MESH - O
W_T	868	4026	3158
W_R	315	1465	1149
W_X	368	1709	1340

ROLLING RING REACTIONS

	100% TORQUE/ 0 RPM	0 TORQUE/100% RPM	RATED POWER
R_1	+248	-268	+105
R_2	2020	-374	1751

4.4.2 Ring Deflections - Outer Ring, R_2

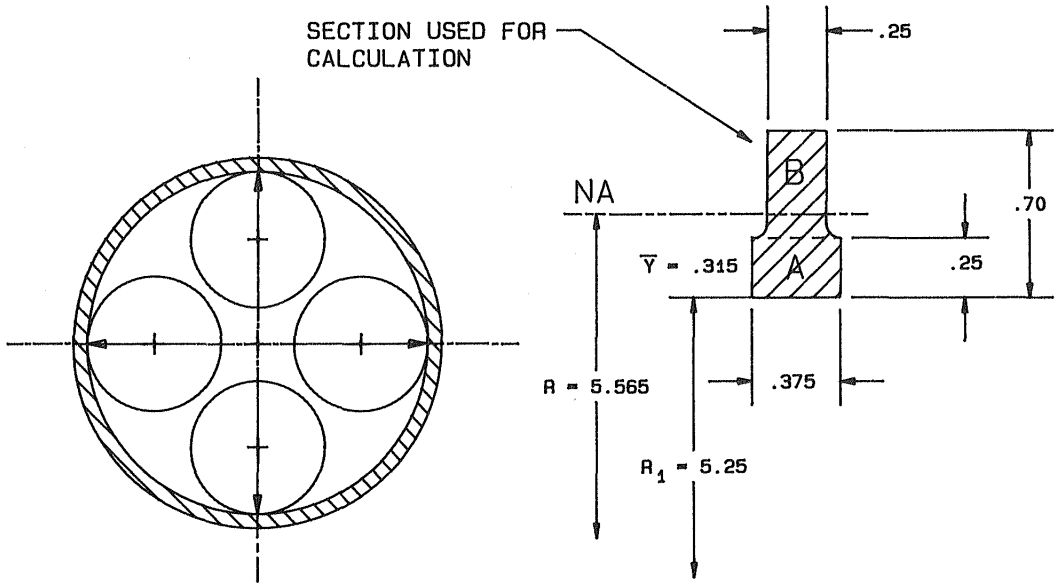

	AREA	X COORDINATE OF CENTROID	M_Y	Y COORDINATE OF CENTROID	M_X
A	.09375	0	0	.125	.011718
B	.11250	0	0	.475	.0534
	.20625	-	-		.06515

$$\bar{Y} = \frac{\sum M_X}{\sum A} = \frac{.06515}{.20625} = .315$$

$$I_{XA} = I_C + Ad^2 = (.375)\,(.25)^3\ /12 + (.09375)\,(.190)^2 = .00387$$

$$I_{XB} = I_C + Ad^2 = (.250)\,(.45)^3\ /12 + (.11250)\,(.160)^2 = \underline{.00477}$$

$$I_{YY} = \underline{\underline{.00864}}\ \text{in}^4$$

FROM ROARK:
RING BENDING STRESS

$$\text{MAX MOMENT} = M = \frac{1}{2}\,WR\left(\frac{1}{2} - \frac{1}{\theta}\right) = \frac{1}{2}\left[(374)\,(5.56)\right]\left(\frac{1}{.707} - \frac{1}{.785}\right) = 146\ \text{in\#}$$

$$\text{BENDING STRESS} = f_b = \frac{Mc}{I} = \frac{(146)\,(.315)}{.00864} = \underline{\underline{5340\ \text{psi}}} \quad \text{--- OK}$$

$$\delta = \left[\frac{WR^3}{2EI}\right]\left[\frac{1}{S^2}\left(\frac{1}{2}\theta + \frac{1}{2}SC\right) - \frac{1}{\theta}\right]$$

$$\delta = \left[\frac{(374)\,(5.565)^3}{(2)\,(E)\,(.00864)}\right]\left[\frac{1}{.707^2}\left(\frac{.7854}{2}\theta + \frac{.707}{2}SC\right) - \frac{1}{.7854}\right] = \underline{\underline{.0015"}}$$

4.4.3 Ring Deflections, Inner Ring, D_2

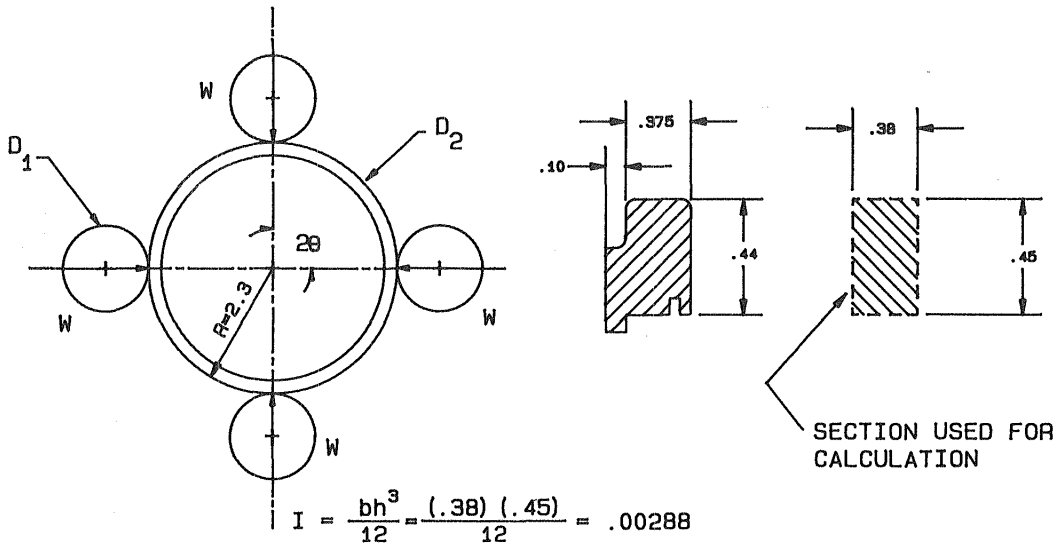

$$I = \frac{bh^3}{12} = \frac{(.38)\ (.45)}{12} = .00288$$

$$\delta = \frac{WR^3}{4EI}\left[\frac{2}{\theta} - \frac{1}{S} - \theta\frac{C}{S^2}\right]$$

$$\delta = \frac{(2040)\ (2.3)^3}{(4)\ (E)\ (.00288)}\left[\frac{2}{.7854} + \frac{1}{.707} - .7854\,\frac{.707}{.707^2}\right] = \underline{\underline{.0015}}$$

COMPRESSIVE STRESS BETWEEN R_2 AND ROLLER RING

$$fc = .591\sqrt{\left(\frac{W_2}{w}\right)\left(E\right)\left(\frac{D_1 + D_2}{D_1 D_2}\right)}$$

$$fc = .591\sqrt{\left(\frac{2040}{.36}\right)\left(E\right)\left(\frac{2.8 + 5.0}{(2.8)\ (5.0)}\right)} = \underline{\underline{181,844 \text{ psi}}}$$

WHERE:

W = RADIAL LOAD
R = MEAN RING RADIUS
I = MOMENT OF INERTIA
S = sin
c = cos
θ = IN RADIANS
δ = RADIAL DEFLECTION IN INCHES

w = EFFECTIVE ROLLER WIDTH
D_1 = ROLLER OUTSIDE DIAMETER
D_2 = ROLLER INSIDE DIAMETER
fc = MAX COMPRESSIVE STRESS
E = MODULUS OF ELASTICITY

4.5 Shafts and Splines

The high speed input shaft diameter and its interface are designed to be compatible with the coupling interfaces presently used in NASA's 500 HP helicopter test stand speed up gearbox. Other shafts subjected to torsion in the gearbox are the quill shaft that connects the high speed helical gear to the bevel pinion, the sun gear shaft, the spindle gear shafts, and the section of the output shaft between the two splines. The shear strength of the shaft material is 95,000 psi. Table 11 summarizes the shaft data and the nominal shear stresses at the design load condition.

TABLE 11

SHAFT STRESS SUMMARY

SHAFT	O.D.	I.D.	TORQUE (in.-lbs.)	Ss (psi)
Quill	1.20	0.95	2,440	11,865
Sun Gear	2.44	2.19	4,674	4,676
Spindle (Sec. A-A)	2.50	2.00	2,203	1,218
Spindle (Sec. B-B)	0.40	1.90	8,055	5,196
Output	1.97	1.25	81,498	61,000

Splines in the gearbox include the quill shaft, the sun gear, and the output shaft. The data for these splines are summarized below in Table 12.

TABLE 12

SPLINE STRESS SUMMARY

SPLINE	PITCH DIAMETER	L (in.)	TORQUE (in.-lbs.)	Ss (psi)
Quill Shaft	1.45	0.7	2,440	3,315
Sun Gear	2.56	0.6	4,691	2,386
Output	3.35	1.3	81,498	11,172

4.6 Lubrication

All gear meshes and all bearings with the exception of the low speed output shaft roller bearing are pressure lubricated. Oil jet sizing is based on the assumption of using 40 psig oil pressure and an allowable delta T rise of 40° F. These values are considered to be conservative, and final oil flows and temperature rise values will be determined and optimized during the load and performance testing. See Figure 17 for the oil jet sizes and locations.

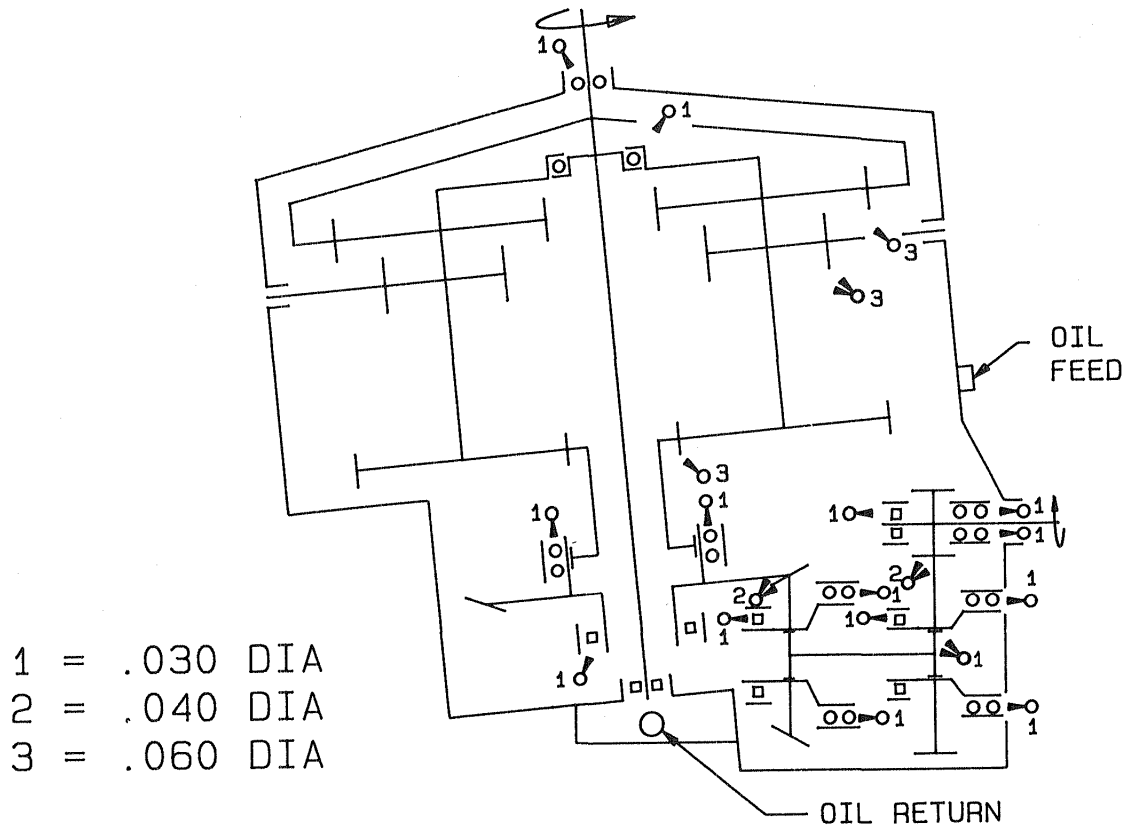

FIGURE 17 - LUBRICATION SYSTEM SCHEMATIC

Table 13 below presents a summary of the power losses, system efficiency determination, and cooling flow calculations.

TABLE 13

CALCULATED POWER LOSSES AND COOLING OIL FLOW RATES*

delta T = 40°F Oil Pressure = 40 psig

	High Speed Mesh		Spiral Bevel Mesh		SABP Mesh			
	Gears	Bearings	Gears	Bearings	Input Mesh	Fixed Mesh	Output Mesh	TOTAL
HP Loss	2.30	.67	1.64	.44	1.75	1.97	1.24	10.01
GPM Required	.80	.20	.50	.15	.40	.60	.40	3.05
Orifice Diameter	.069	.030	.080	.030	.030	.035	.030	

Estimated Gear Box Efficiency: = 436/450 x 100 = 97.7%

* Based on Using MIL23699 oil

4.7 Weight Analysis

The actual weight of the 85G1-1 transmission using aluminum as the gear housing material is 167 pounds. A detailed weight breakdown of the various transmission components is summarized in Table 14. The housing group weight represents all non-rotating housing components as manufactured from aluminum castings. Using magnesium as the housing material would reduce the weight of this group from 44.19 lbs. to 29.16 lbs., thus giving a transmission weight of 151.7 lbs. To achieve additional weight reduction, the gear components can be subjected to traditional weight reduction techniques such as incorporation of lightening holes, thinner gear web sections, etc. Further, some of the bearings which were highly overdesigned can be reduced in size resulting in corresponding weight savings.

Using a design rating of 450 HP and a transmission weight of 151.7 lbs. [166.77 - (44.19)(.66)] results in the power density ratio of .33 lbs./HP (152/450). Uprating the power to 550 HP reduces the power ratio to .27 lbs./HP. As noted above, taking advantage of such weight reduction techniques as lightening holes, thinner webs etc., the overall weight can be further reduced to about 143 lbs. This weight would result in the reduction of the power density ratio from .33 lbs./HP to .31 lbs./HP with a rating of 450 HP and .26 lbs./HP with a transmission rating of 550 HP.

By examining the weight components of helicopter power transmissions and comparing those weights to the functional requirements of the transmissions, some interesting observations can be made. From a functional point of view, helicopter transmissions need to accept power from the prime mover(s) and deliver that power at the required output speed to the rotor. Ideally, the resultant power transmissions would have high reliability, high mechanical efficiency, low weight, low noise, low cost, and unlimited life.

Further, the transmission from a functional point of view should be called upon to provide structural support only for its internally generated loads. Accordingly, provisions need to be made outside of the power transmission to react such loads as rotor moments and rotor lift forces. Following this rationale and using SABP type gear arrangements, it can be seen that a need for a structural gear housing disappears. What is required is an "oil can". This "oil can" can be made from light weight composites, rubber, thin sheet metal, etc. The SABP fixed ring gear can be used to make the necessary provisions for torque reaction and transmission weight reaction points.

The implications of such an approach on the overall weight reduction of the main helicopter transmissions are very favorable and have been estimated to be in the 20% range.

TABLE 14

ACTUAL COMPONENT WEIGHTS FOR PROTOTYPE 85G1-1 SABP TRANSMISSION AND ESTIMATED PRODUCTION WEIGHTS

		Prototype Weight	Production Weight
Gear Group			
SABP			
Fixed Ring Gear	13.00		
Conical Flange	8.50		
Output Ring Gear	8.00		
Sun Gear	1.00		
Spindle Gears	36.00		
Support Rings	5.62		
Locknuts	3.00		
Retaining Plates	.75		
Lock Pins	.13	76.00	71.00
High Speed Set			
Pinion	1.00		
Gear	3.00	4.00	3.50
Bevel Set			
Pinion	3.50		
Gear	6.50	10.00	9.50
Bearing Group			
Bearings	13.73		
Retainers	2.84		
Spacers	.77		
Shims	.63		
Locknuts	1.55		
Lockwashers	.32	19.84	17.00
Housing Group			
Top Case	17.20		
Main Case	18.00		
Input Housing	8.00		
Output Seal Housing	.44		
Input Seal Housing	.25		
Cover	.30	44.19	26.50
Shafts		9.25	9.25
Fasteners & Miscellaneous Hardware		3.49	3.49
	TOTAL	166.77 lbs.	140.16 lbs.

Further, from a vulnerability point of view due to oil loss as a result of small arms fire, the "oil can" can be designed to be self-sealing; thus, minimizing the danger of catastrophic transmission failures.

In summary, a goal of .25 lbs./HP for a helicopter type transmission is considered to be realistic and achievable.

5.0 MANUFACTURING AND ASSEMBLY OF 85G1-1 HELICOPTER TRANSMISSION

5.1 SABP Spindle Gear Development

The non-factorizing and tooth hunting design of the SABP requires accurate control of the spindle gear assembly and gear tooth timing. Accordingly, the design engineer must provide a foolproof system to insure that all the spindles are aligned correctly and that the assembly achieved is correct. As noted in Section 4.1.8, an assembly fixture which positions and orients the spindles accurately with respect to each other has been designed and manufactured. This fixture was used to make over 30 correct assemblies sequentially during the course of the subject program. Figure 26 of Section 5.2 presents a photograph of the assembly fixture.

The foremost requirement for proper indexing of the spindle gear is that the circumferential radial relationship (timing) of the three planet gears on each spindle gear assembly be the same from one assembly to another. This requirement is normally accomplished by selecting a tooth or a valley on each planet gear and accurately aligning it with the other two teeth or valleys. Once aligned, a marking system to identify the selected teeth, as shown by Figure 18a, can be employed.

If the three gears could be final ground using the same setup and a single gear blank and if the manufacturing machinery were very accurate, precision alignment of the gear teeth could be

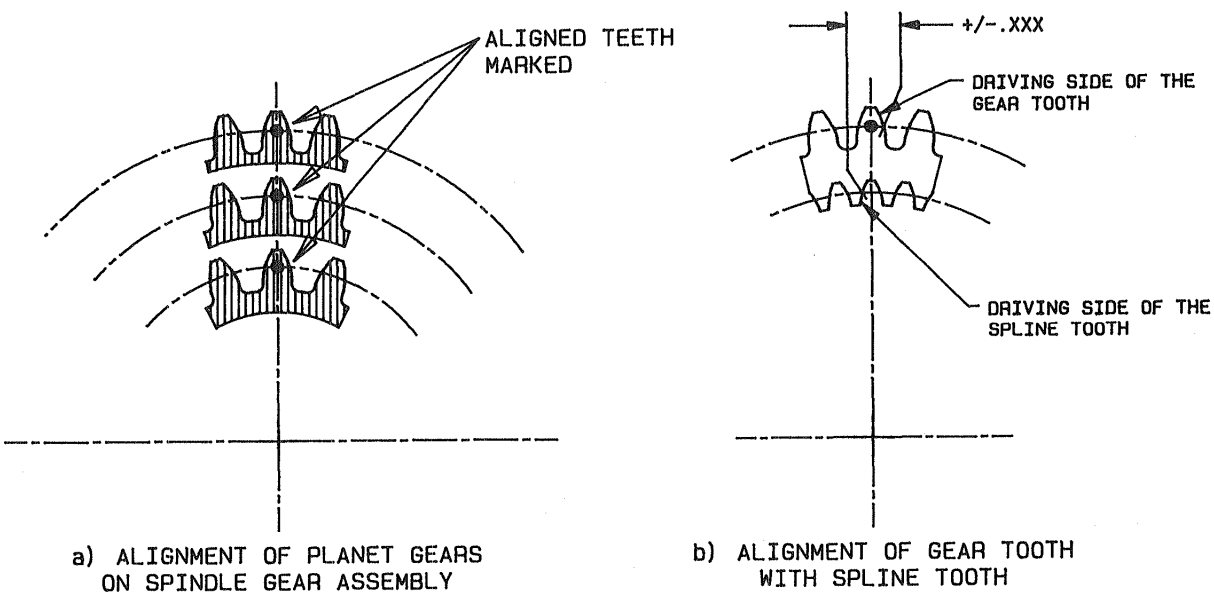

FIGURE 18 - GEAR TOOTH ALIGNMENT

achieved and would be a function of the accuracy of the gear tooth grinder. As can be seen from the spindle gear assembly, Figure 19, the proximity of P_o to P_f precludes the conventional grinding of the P_f gear teeth as the three-planet spindle is integral. For low speeds and noncritical applications, the planet P_f could be produced using a shaper cutter. For high performance applications, however, the planet gears need to be finished more accurately than normally achieved by shaping cutters.

A spline connection is a common method of assembling a planet gear to the spindle shaft. In order to time the respective gears using this arrangement, a spline tooth (or valley) is selected to be aligned with the selected gear tooth and appropriately marked as shown by Figure 18b. As the opposite sides of the teeth are driving, alignment in this location must be controlled to eliminate the effects of spline looseness and gear backlash. Since gear tooth timing normally must be held to close tolerances (on the order of .001 inches), this manufacturing method is difficult and expensive.

Therefore, a new spindle joining technique was used for the fabrication of the compound gear assemblies for the 85G1-1 SABP. Figures 19 and 20 show the spindle arrangement and the assembly alignment tool used. Using this process, the spindle planet gears were completely finished and ultimately were permanently joined by electron beam (EB) welding the input planet gear, P, and the output planet gear, P_o, to the fixed planet gear, P_f. The joining areas are shown by the enclosures on Figure 19. The gear teeth and rolling surfaces are completely finished, heat treated, and ground prior to the EB welding procedure. Internal rings shown in the joining areas are pressed into position on each end of the fixed planet gear shaft prior to EB welding. These serve to locate the input and output planet gears and to establish their concentricity with the fixed planet gear. A close slip fit is used between the rings and the end planet gears so that the three gears can be rotated with respect to each other for alignment purposes.

A special fixture was designed and fabricated for use in the planet alignment procedure. Figure 20 shows the fixture with a spindle gear assembly in place. The philosophy behind the use of the fixture is that a specific alignment of teeth on the three gears is essentially meaningless. What is meaningful and required is that the circumferential relationship of the gear teeth on the three gears be the same from one spindle gear assembly to the next. The use of the fixture is intended to provide this alignment and repeatability.

The fixture is used with the spindle gear assembly oriented vertically. The spindle support pieces are held accurately in the line bored pilot diameters on each end of the fixture.

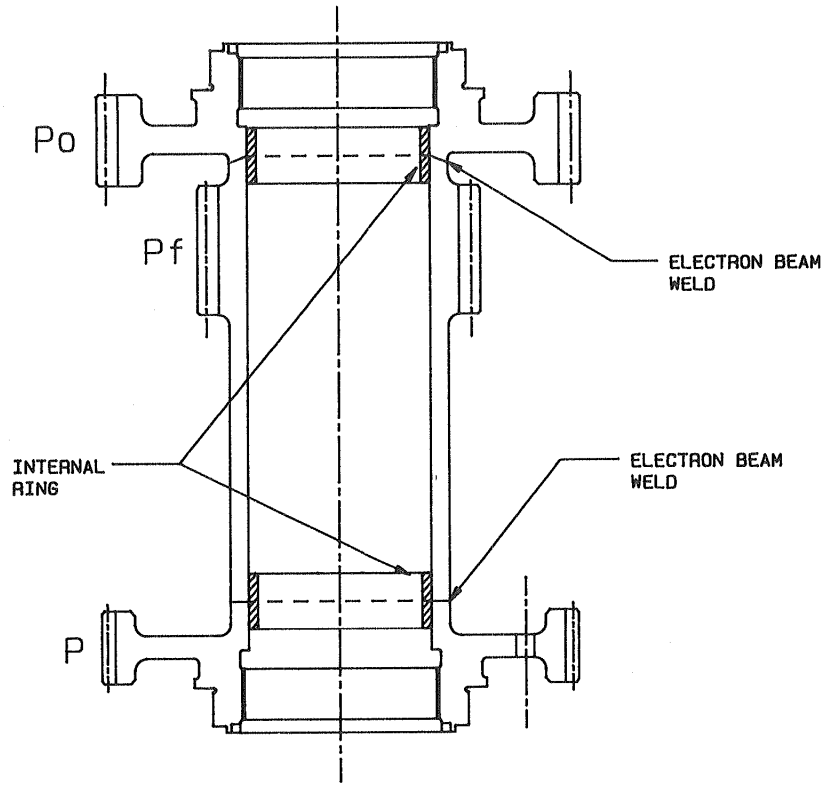

FIGURE 19 - SPINDLE GEAR ASSEMBLY

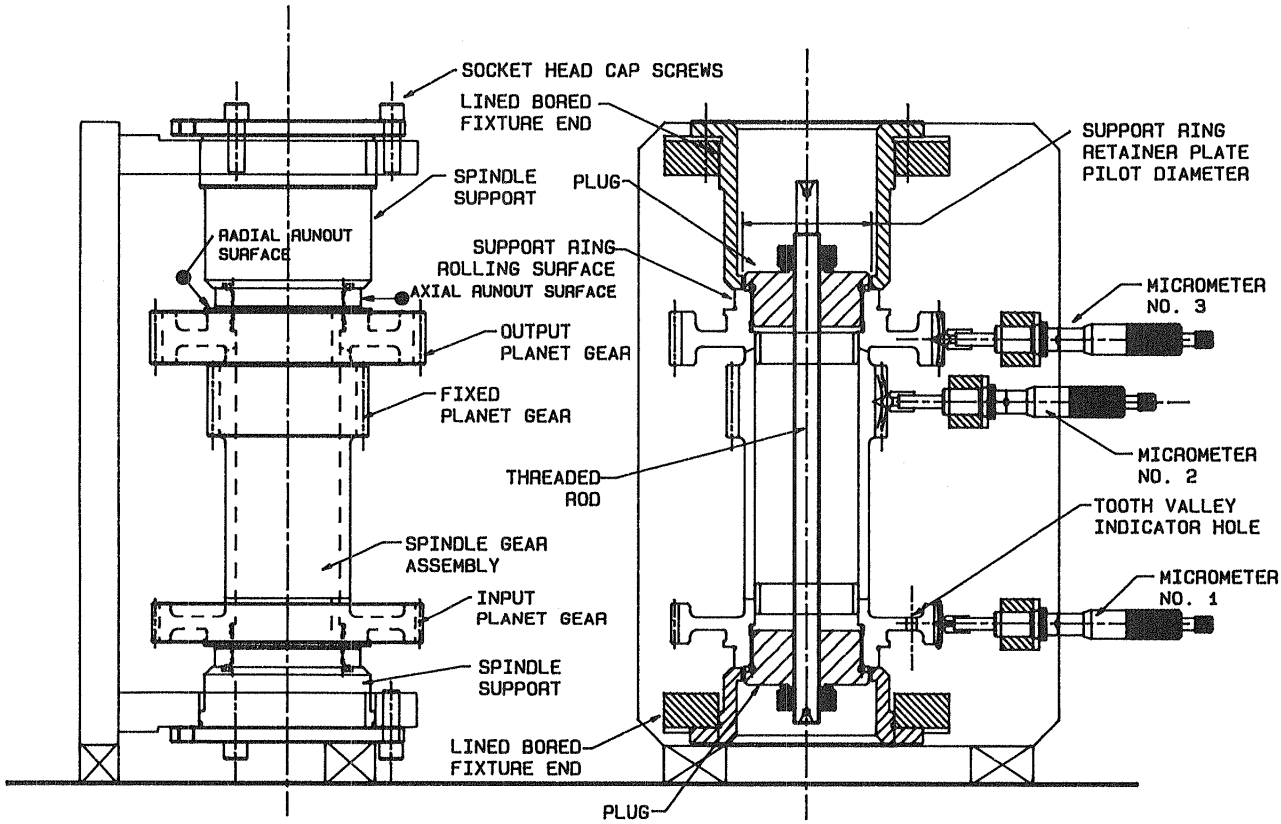

FIGURE 20 - SPINDLE GEAR ASSEMBLY ALIGNMENT & INSPECTION FIXTURE

Although accuracy might be slightly better if the fixture picked up the ring rolling surfaces directly, it was felt that there might be a danger that these finished surfaces could be damaged during the assembly and inspection procedures. Therefore, the support ring retainer plate pilot diameter was used instead.

Figure 21 is a photograph of the spindle aligning fixture further defining the characteristics of this assembly and inspection tool. As can be noted, three special micrometers with ball end fittings were used to pick up a tooth valley on each planet gear. An arbitrary valley was indicated on the input planet gear by a drilled hole approximately aligned with the valley. The first step of the aligning procedure was to pick up this valley and center it on the ball end of the first micrometer. A penetration depth was measured by micrometer #1 and served as a baseline measurement which was rechecked throughout the assembly procedure. The fixed and output planet gears were then rotated as required to center a tooth valley on the ball end of their respective micrometers, #2 and #3, and penetration depth measurements were also made for baseline data.

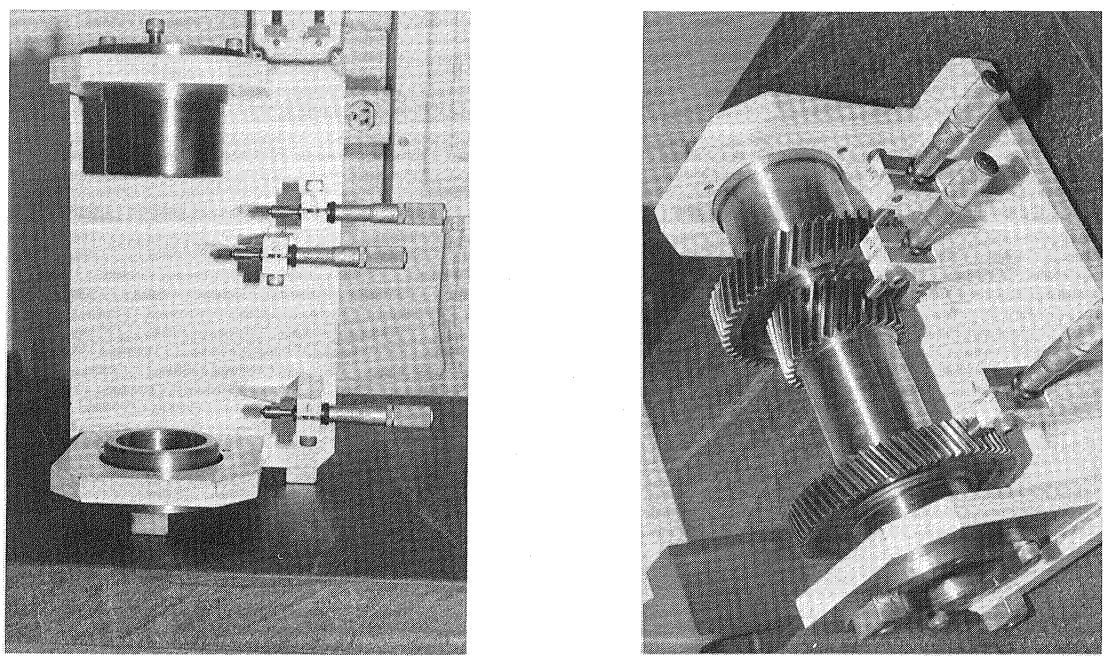

FIGURE 21 - PHOTOGRAPH OF SPINDLE ALIGNMENT AND INSPECTION FIXTURE

With the tooth valleys aligned, the threaded rod is drawn hand-tight on the plugs to maintain the assembly position and alignment. The micrometer readings are rechecked to assure that nothing has moved during the procedure. The assembly is then removed from the fixture, and the threaded rod is drawn tight. The assembly is replaced in the fixture and the micrometer readings are rechecked once again for repeatability.

EB welding is then accomplished on the assembly to join the three pieces together. During the welding procedure, the inner rings of the assembly serve an additional function. When the weld beam accomplishes minimum "peak through" in the rings, it is known that the beam has adequately penetrated the thickness of the gear elements. After welding and stress relieving, the assembly is again mounted in the fixture, and the micrometer readings are rechecked for repeatability. The inner rings are subsequently machined out, and the external weld surfaces are dressed.

Prior to EB welding the final spindle gear assemblies, two exploratory investigations were undertaken by TTC and the EB welder. The purpose of the first investigation was to develop an EB welding schedule. This was accomplished by using several three-plate test sets. The three test plates represented the thicknesses of the two gear pieces and the internal ring at the weld locations.

The second investigation was the trial welding of a dummy spindle gear assembly to determine the characteristics and magnitude of distortions and to develop the necessary procedures to insure that there would be no significant distortions resulting from the EB welding. The configuration used for the dummy assembly is shown in Figure 22.

Accurate blanks for all three gear pieces were fabricated and stress relieved. All dimensions were finished, except gear teeth were not cut. Instead, an axial groove was cut in each piece to simulate a tooth valley. The groove width, which simulated the gear tooth spaces, was accurately milled into each gear blank. After the EB process was developed and after the dummy spindle gear assembly was EB welded, the inspection revealed that no significant distortions were discernible.

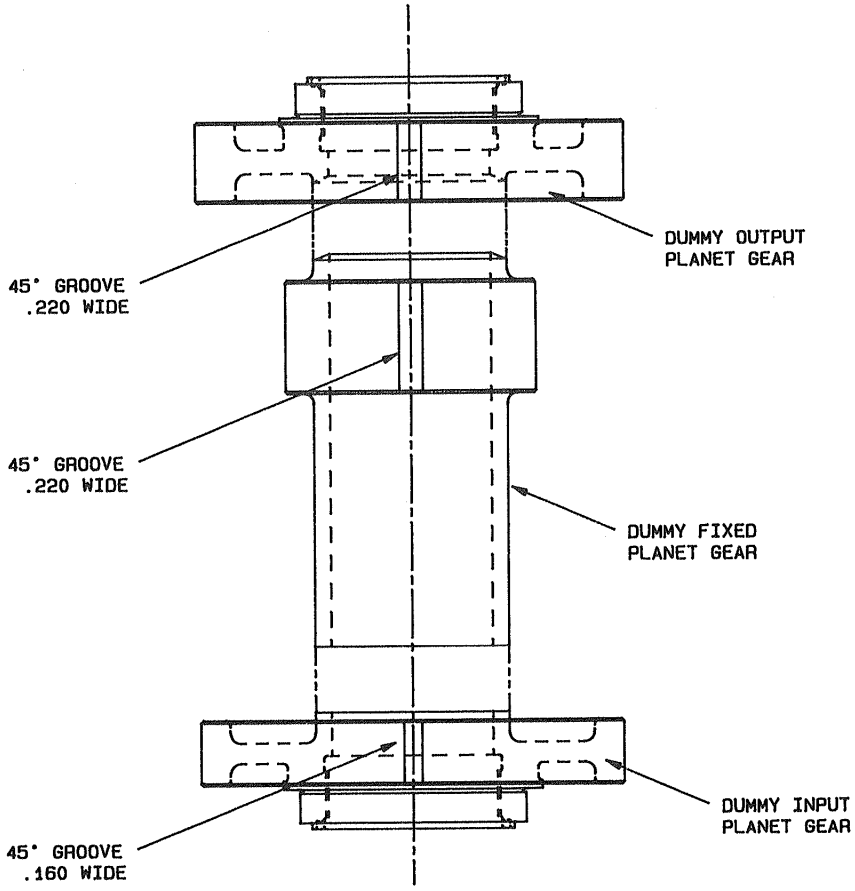

FIGURE 22 - CONFIGURATION FOR DUMMY SPINDLE GEAR ASSEMBLY

Nine (9) final spindle gear assemblies were then EB welded according to the assembly procedure noted below.

FINAL ASSEMBLY AND SETUP PROCEDURE
FOR SPINDLE GEAR EB WELDING

1. Assemble clean and dry parts.
2. Place complete assembly in fixture.
3. Insure that gears move freely.
4. Set dial indicator to check spindle deflection when the micrometers are engaged.
5. Complete fixture assembly. (SHCS Loose)
6. Align marked tooth valley on input gear and set No. 1 micrometer.
7. Engage Nos. 2 and 3 micrometers at marked tooth locations.
8. Record the initial or 1st set of micrometer readings.
9. Back out micrometers.
10. Clamp Spindle Assembly with fixture using SHCS.
11. Tighten Threaded Rod. (Approximately 25 to 30 in.-lbs.)
12. Release fixture clamp. (Loosen SHCS.)
13. Reset micrometers and record 2nd set of micrometer readings.
14. Back out micrometers and remove Spindle Assembly.
15. Tighten Assembly with Threaded Rod. (100 to 150 in-lbs.)
16. Reinstall Assembly and reset micrometers.
17. Record 3rd set of micrometer readings.
18. Remove for welding.
19. Inspect after welding and record 4th set of micrometer readings.

Spindle assembly serial numbers 01 through 08 were used in the two 85G1-1 gearbox builds. Serial number 09 is a spare. The measurements taken throughout the assembly and EB welding processes of the nine spindle gear assemblies are presented in Tables 15a, 16a, and 17a. Three different operators were used to accumulate the micrometer readings given in this table. Considering some of the built-in inaccuracies and the micrometer "feel" of each operator, the readings show good repeatability and reasonable consistency.

Further examination and analysis of the micrometer data indicates that as a result of EB welding there is no trend that the micrometer readings are increasing or decreasing. This suggests that on the average there is no change taking place. If the four readings were averaged and if these averages were compared to the initial readings, the resultant variances are in the range of .001 of an inch.

Another interesting comparison is to examine the nine (9) spindle readings at the various stages of assembly and welding and compare these values and their averages to the averages of the four readings taken on each spindle. This comparison also shows that the averages are within .001.

Although there is not sufficient data to undertake a meaningful statistical analysis, the available data does indicate that the spindle assembly accuracy is within the design limits and that no discernible changes are occurring as a result of EB welding and stress relieving.

Another interesting way of looking at this data is to round off the micrometer readings from four significant digits to three significant digits. The results of this process are shown in Tables 15b, 16b, and 17b. Once again, the resultant numbers indicate that all spindles are similar and that no change has occurred during EB welding.

TABLE 15

READINGS TAKEN AT MICROMETER 1 LOCATION

Micrometer No.	1						
Reading No.	1	2	3	4	Average	Maximum Variance	Maximum Variance From Average
S/N 01	0.4424	0.4428	0.4425	0.4418	0.4424	0.0010	0.0006
S/N 02	0.4415	0.4415	0.4418	0.4417	0.4416	0.0003	0.0002
S/N 03	0.4415	0.4416	0.4418	0.4450*	0.4425	0.0035	0.0025
S/N 04	0.4438	0.4440	0.4440	0.4445	0.4441	0.0007	0.0004
S/N 05	0.4418	0.4420	0.4429	0.4433	0.4425	0.0015	0.0008
S/N 06	0.4425	0.4423	0.4422	0.4436	0.4427	0.0014	0.0010
S/N 07	0.4415	0.4417	0.4416	0.4420	0.4417	0.0005	0.0003
S/N 08	0.4420	0.4423	0.4425	0.4428	0.4424	0.0008	0.0004
S/N 09	0.4428	0.4428	0.4428	0.4430	0.4429	0.0002	0.0001
Average	0.4422	0.4423	0.4425	0.4431	0.4425	0.0011	0.0007
Maximum Variance	0.0023	0.0013	0.0024	0.0033	0.0024	0.0033	0.0024
Maximum Variance From Average	0.0016	0.0017	0.0015	0.0019	0.0015	0.0024	0.0018

* Not included in the analysis.

(a)
Four Significant Decimal Places

Micrometer No.	1						
Reading No.	1	2	3	4	Average	Maximum Variance	Maximum Variance From Average
S/N 01	0.442	0.443	0.443	0.442	0.442	0.001	0.001
S/N 02	0.442	0.442	0.442	0.442	0.442	0.000	0.000
S/N 03	0.442	0.442	0.442	0.445	0.442	0.004	0.003
S/N 04	0.444	0.444	0.444	0.445	0.444	0.001	0.000
S/N 05	0.442	0.442	0.443	0.443	0.443	0.002	0.001
S/N 06	0.443	0.442	0.442	0.444	0.443	0.001	0.001
S/N 07	0.442	0.442	0.442	0.442	0.442	0.001	0.000
S/N 08	0.442	0.442	0.443	0.443	0.442	0.001	0.000
S/N 09	0.443	0.443	0.443	0.443	0.443	0.000	0.000
Average	0.442	0.442	0.442	0.443	0.443	0.001	0.001
Maximum Variance	0.002	0.001	0.002	0.003	0.002	0.003	0.002
Maximum Variance From Average	0.002	0.002	0.002	0.002	0.002	0.002	0.002

(b)
Three Significant Decimal Places

MICROMETER READING LEGEND:

Reading No. 1 - Taken during initial alignment
Reading No. 2 - Taken after assembly was clamped finger tight
Reading No. 3 - Taken after assembly was clamped tight
Reading No. 4 - Taken after EB welding and stress relieving

TABLE 16

READINGS TAKEN AT MICROMETER 2 LOCATION

Micrometer No.	2						Maximum Variance From Average
Reading No.	1	2	3	4	Average	Maximum Variance	
S/N 01	0.4080	0.4084	0.4070	0.4063	0.4074	0.0021	0.0011
S/N 02	0.4072	0.4080	0.4078	0.4074	0.4076	0.0008	0.0004
S/N 03	0.4070	0.4073	0.4074	0.4083	0.4075	0.0013	0.0008
S/N 04	0.4072	0.4075	0.4078	0.4058	0.4071	0.0020	0.0013
S/N 05	0.4082	0.4084	0.4090	0.4083	0.4085	0.0008	0.0005
S/N 06	0.4082	0.4078	0.4073	0.4079	0.4078	0.0009	0.0005
S/N 07	0.4070	0.4078	0.4077	0.4078	0.4076	0.0008	0.0006
S/N 08	0.4088	0.4093	0.4099	0.4083	0.4091	0.0016	0.0008
S/N 09	0.4080	0.4085	0.4085	0.4090	0.4085	0.0010	0.0005
Average	0.4077	0.4081	0.4080	0.4077	0.4079	0.0013	0.0007
Maximum Variance	0.0018	0.0020	0.0029	0.0032	0.0014	0.0002	0.0009
Maximum Variance From Average	0.0011	0.0012	0.0019	0.0019	0.0006	0.0003	0.0006

(a)
Four Significant Decimal Places

Micrometer No.	2						Maximum Variance From Average
Reading No.	1	2	3	4	Average	Maximum Variance	
S/N 01	0.408	0.408	0.407	0.406	0.407	0.002	0.001
S/N 02	0.407	0.408	0.408	0.407	0.408	0.001	0.000
S/N 03	0.407	0.407	0.407	0.408	0.408	0.001	0.001
S/N 04	0.407	0.408	0.408	0.406	0.407	0.002	0.001
S/N 05	0.408	0.408	0.409	0.408	0.408	0.001	0.001
S/N 06	0.408	0.408	0.407	0.408	0.408	0.001	0.001
S/N 07	0.407	0.408	0.408	0.408	0.408	0.001	0.001
S/N 08	0.409	0.409	0.410	0.411	0.410	0.002	0.001
S/N 09	0.408	0.409	0.409	0.409	0.409	0.001	0.001
Average	0.408	0.408	0.408	0.408	0.408	0.001	0.001
Maximum Variance	0.002	0.002	0.003	0.005	0.001	0.000	0.000
Maximum Variance From Average	0.001	0.001	0.002	0.003	0.001	0.000	0.000

(b)
Three Significant Decimal Places

MICROMETER READING LEGEND:

Reading No. 1 - Taken during initial alignment
Reading No. 2 - Taken after assembly was clamped finger tight
Reading No. 3 - Taken after assembly was clamped tight
Reading No. 4 - Taken after EB welding and stress relieving

TABLE 17

READINGS TAKEN AT MICROMETER 3 LOCATION

Micrometer No.	3						Maximum Variance From Average
Reading No.	1	2	3	4	Average	Maximum Variance	
S/N 01	0.5169	0.5189	0.5165	0.5150	0.5168	0.0039	0.0018
S/N 02	0.5168	0.5170	0.5172	0.5160	0.5168	0.0012	0.0008
S/N 03	0.5170	0.5175	0.5180	0.5182	0.5177	0.0012	0.0007
S/N 04	0.5161	0.5165	0.5170	0.5142	0.5160	0.0028	0.0018
S/N 05	0.5173	0.5180	0.5188	0.5185	0.5182	0.0015	0.0009
S/N 06	0.5162	0.5163	0.5159	0.5165	0.5162	0.0004	0.0003
S/N 07	0.5163	0.5168	0.5168	0.5168	0.5167	0.0005	0.0004
S/N 08	0.5178	0.5183	0.5175	0.5178	0.5179	0.0008	0.0004
S/N 09	0.5172	0.5185	0.5186	0.5176	0.5180	0.0014	0.0008
Average	0.5168	0.5175	0.5174	0.5167	0.5171	0.0015	0.0009
Maximum Variance	0.0017	0.0026	0.0027	0.0043	0.0022	0.0035	0.0014
Maximum Variance From Average	0.0010	0.0014	0.0015	0.0025	0.0011	0.0024	0.0009

(a)
Four Significant Decimal Places

Micrometer No.	3						Maximum Variance From Average
Reading No.	1	2	3	4	Average	Maximum Variance	
S/N 01	0.517	0.519	0.517	0.515	0.517	0.004	0.002
S/N 02	0.517	0.517	0.517	0.516	0.517	0.001	0.001
S/N 03	0.517	0.518	0.518	0.518	0.518	0.001	0.001
S/N 04	0.516	0.517	0.517	0.514	0.516	0.003	0.002
S/N 05	0.517	0.518	0.519	0.519	0.518	0.002	0.001
S/N 06	0.516	0.516	0.516	0.517	0.516	0.000	0.000
S/N 07	0.516	0.517	0.517	0.517	0.517	0.001	0.000
S/N 08	0.518	0.518	0.518	0.518	0.518	0.001	0.000
S/N 09	0.517	0.519	0.519	0.518	0.518	0.001	0.001
Average	0.517	0.518	0.517	0.517	0.517	0.002	0.001
Maximum Variance	0.002	0.003	0.003	0.004	0.002	0.004	0.001
Maximum Variance From Average	0.001	0.001	0.001	0.003	0.001	0.002	0.001

(b)
Three Significant Decimal Places

MICROMETER READING LEGEND:

Reading No. 1 - Taken during initial alignment
Reading No. 2 - Taken after assembly was clamped finger tight
Reading No. 3 - Taken after assembly was clamped tight
Reading No. 4 - Taken after EB welding and stress relieving

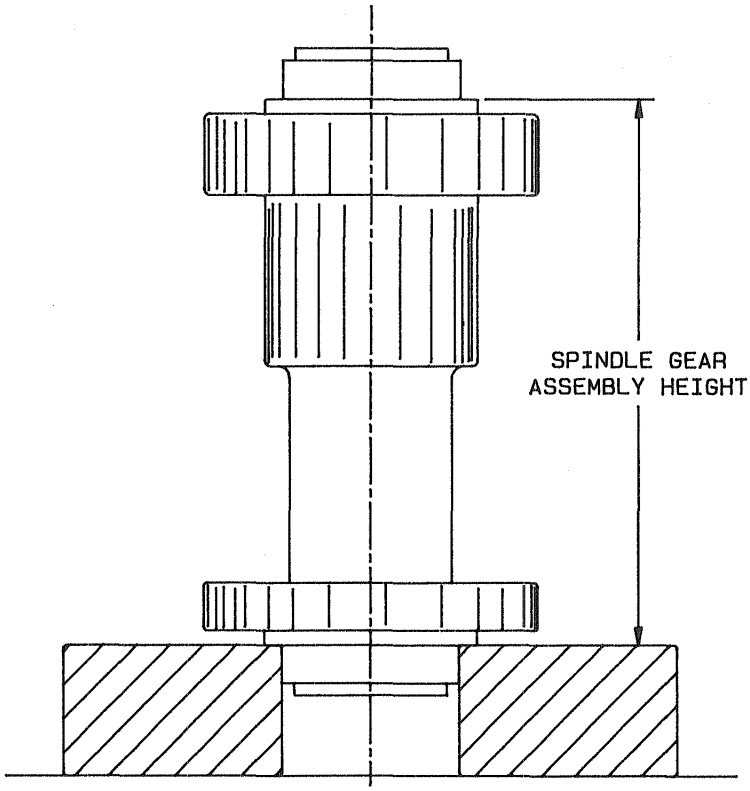

FIGURE 23 - SETUP FOR SPINDLE ASSEMBLY HEIGHT MEASUREMENT

In addition to the micrometer readings, assembly height and axial and radial runout measurements were made before and after welding. Runout measurements were made in the fixture at the locations shown on Figure 20. The height measurements were made with a separate setup, as illustrated by Figure 23. The before and after EB welding measurements are summarized in Table 18.

As the previous description shows, the spindle assembly fixture served not only as an aligning device but also as an inspection device throughout the assembly procedure. The ball end on the micrometer used for establishing the depth of penetration in the tooth valley is, in a sense, similar to a type of total composite error check. In a total composite check, the total variation in center distance is recorded for a gear rolling with a master gear. With the tooth valley centered on the ball, the micrometer measurement includes variations in runout, tooth spacing, profile, and thickness. Because the measurement is made only at the approximate center of the tooth face, it does not include variations in lead.

TABLE 18

SPINDLE GEAR ASSEMBLY HEIGHT & RUNOUT MEASUREMENTS

	BEFORE WELDING			AFTER WELDING		
	ASSEMBLY HEIGHT	AXIAL RUNOUT	RADIAL RUNOUT	ASSEMBLY HEIGHT	AXIAL RUNOUT	RADIAL RUNOUT
S/N 01	6.496	0.0015	0.0028	6.485	0.0012	0.0050
S/N 02	6.497	0.0008	0.0015	6.488	0.0020	0.0030
S/N 03	6.492	0.0080	0.0012	6.484	0.0035	0.0035
S/N 04	6.494	0.0012	0.0020	6.482	0.0030	0.0035
S/N 05	6.493	0.0015	0.0013	6.480	0.0035	0.0045
S/N 06	6.495	0.0018	0.0013	6.486	0.0008	0.0028
S/N 07	6.490	0.0015	0.0013	6.481	0.0018	0.0025
S/N 08	6.493	0.0015	0.0020	6.483	0.0010	0.0015
S/N 09	6.495	0.0008	0.0013	6.485	0.0010	0.0020
Average	6.494	0.002	0.002	6.484	0.002	0.003
Maximum Variance	0.007	0.0072	0.0016	0.008	0.0027	0.0035
Maximum Variance From Average	0.0039	0.0059	0.0012	0.0042	0.0015	0.0019

(a)
Four Significant Decimal Places

	BEFORE WELDING			AFTER WELDING		
	ASSEMBLY HEIGHT	AXIAL RUNOUT	RADIAL RUNOUT	ASSEMBLY HEIGHT	AXIAL RUNOUT	RADIAL RUNOUT
S/N 01	6.496	0.002	0.003	6.485	0.001	0.005
S/N 02	6.497	0.001	0.002	6.488	0.002	0.003
S/N 03	6.492	0.008	0.001	6.484	0.004	0.004
S/N 04	6.494	0.001	0.002	6.482	0.003	0.004
S/N 05	6.493	0.002	0.001	6.480	0.004	0.005
S/N 06	6.495	0.002	0.001	6.486	0.001	0.003
S/N 07	6.490	0.002	0.001	6.481	0.002	0.003
S/N 08	6.493	0.002	0.002	6.483	0.001	0.002
S/N 09	6.495	0.001	0.001	6.485	0.001	0.002
Average	6.494	0.002	0.002	6.484	0.002	0.003
Maximum Variance	0.007	0.007	0.002	0.008	0.003	0.004
Maximum Variance From Average	0.004	0.006	0.001	0.004	0.002	0.002

(b)
Three Significant Decimal Places

Spindle gear assembly Serial Nos. 05, 06, 07, and 08 were checked at four tooth valley locations around the gear circumference. The results of this check are presented in Table 19.

If it is assumed that the above measured variations approximate the total composite error, the variations noted can be used to estimate an approximate value of gear quality. It should be noted that the purpose of this test was to gain additional experience and confidence with respect to the overall gear quality, and not to comment on the absolute quality of the gears. Using Dudley's Gear Handbook, the allowable total composite variations for an AGMA quality 11 gear can be interpreted as .0014, .0013, and .0013 for the 68-tooth, 29-tooth and 51-tooth gears, respectively, which then leads to the observations presented in Table 20.

Using the results of the micrometer data analysis as shown in Table 18 and applying these averages to the readings shown in Table 19, it can be noted that the values of the maximum variances are very sensitive to whether three or four significant digits are employed in the calculations. As noted in Table 17, when three significant digits are used, the average readings among the nine spindles show variations of .001. Similarly, when the same surface is measured four different times, the first three significant digits are in agreement and the value of the fourth digit shows wide variations. If the micrometer readings shown in Table 18 were rounded off to three significant digits and if these values were compared to the average readings noted in Table 19, the resultant maximum variations are found to be less than .001 of an inch; thus, suggesting that all gears exceed AGMA class 12 rating. See Table 20.

On the occasion of demonstrating to TTC their capability for gear manufacturing and inspection, a prospective vendor ran the serial number 09 spindle gear assembly through its new gear checking machine. The machine allegedly is a highly sophisticated piece of equipment manufactured by M & M Precision Systems and is claimed to be very accurate for checking the geometric quality of gears. The results of this inspection implied excessive lead errors in all three of the planet gears. Four gear teeth were checked for lead error on each gear. The inspection results are shown by Figure 24 for the 68-tooth input planet gear at the top, the 29-tooth fixed planet gear in the center and the 51-tooth output planet gear at the bottom of the page.

The gear teeth denoted by the asterisks above and on the inspection plots were indicated to be out of lead tolerance for gears of AGMA quality number 11, which is the gear drawing requirement.

TABLE 19

SPINDLE GEAR ASSEMBLY 10273-1

	VALLEY NO.	SERIAL NO. 05	06	07	08
68-Tooth Gear	1	.4427	.4425	.4415	.4428
	18	.4423	.4428	.4434	.4422
	35	.4420	.4424	.4420	.4423
	52	.4417	.4422	.4424	.4427
MAX. VARIATION					
4 Significant Digits		.0010	.0006	.0019	.0006
3 Significant Digits		<.001	<.001	<.001	<.001
29-Tooth Gear	1	.4098	.4083	.4071	.4081
	8	.4092	.4080	.4091	.4084
	16	.4067	.4090	.4083	.4084
	23	.4077	.4093	.4075	.4086
MAX. VARIATION					
4 Significant Digits		.0031	.0013	.0020	.0005
3 Significant Digits		<.001	<.001	<.001	<.001
51-Tooth Gear	1	.5195	.5173	.5171	.5173
	14	.5188	.5176	.5185	.5171
	27	.5173	.5176	.5180	.5170
	39	.5184	.5178	.5168	.5179
MAX. VARIATION					
4 Significant Digits		.0022	.0005	.0017	.0009
3 Significant Digits		<.001	<.001	<.001	<.001

TABLE 20

MEASURED VARIATION AND
EQUIVALENT AGMA QUALITY NUMBER

	68-Tooth Gear	29-Tooth Gear	51-Tooth Gear
S/N 05			
4 SIGNIFICANT DIGITS			
Maximum Variance	.0010	.0031	.0022
AGMA Class	12	8	10
3 SIGNIFICANT DIGITS			
Maximum Variance	<.001	<.003	<.002
AGMA Class	>12	>12	>12
S/N 06			
4 SIGNIFICANT DIGITS			
Maximum Variance	.0006	.0013	.0005
AGMA Class	>12	>11	>12
3 SIGNIFICANT DIGITS			
Maximum Variance	<.001	<.002	<.001
AGMA Class	>12	>12	>12
S/N 07			
4 SIGNIFICANT DIGITS			
Maximum Variance	.0019	.0020	.0017
AGMA Class	>10	>10	>10
3 SIGNIFICANT DIGITS			
Maximum Variance	<.002	<.002	<.002
AGMA Class	>12	>12	>12
S/N 08			
4 SIGNIFICANT DIGITS			
Maximum Variance	.0006	.0005	.0019
AGMA Class	>12	>12	>12
3 SIGNIFICANT DIGITS			
Maximum Variance	<.001	<.001	<.002
AGMA Class	>12	>12	>12

PART NAME : 10207-1-XX TIME : 17:39:28 SERIAL 0

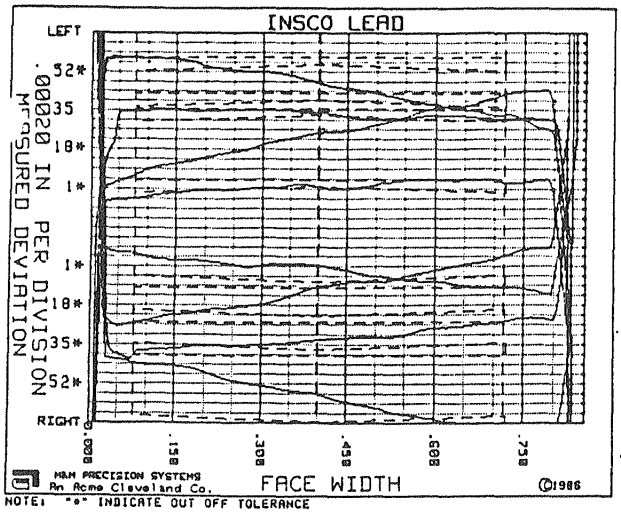

NOTE: "*" INDICATE OUT OFF TOLERANCE

TOOTH	LEFT FLANK SLOPE	LEFT FLANK ERROR	LEFT FLANK HIGH	TOOTH	RIGHT FLANK SLOPE	RIGHT FLANK ERROR	RIGHT FLANK HIGH
1 *	.00032	.00039	.00007	1 *	.00069	.00071	.00007
18 *	.00157	.00167	.00006	18 *	-.00135	.00138	.00007
35	-.00020	.00020	.00006	35 *	-.00056	.00070	.00008
52 *	-.00131	.00120	.00009	52 *	.00145	.00134	.00005

L.S. BEST FIT LINE TYPE ANALYSIS BETWEEN SPECIFIED SEGMENT: C1 AND C3
AGMA TOLERANCE : Q11.0
MIN AGMA ACHIEVED : Q 1.0

	LEFT FLANK	RIGHT FLANK
AVERAGE SLOPE	.00010	.00006
TOLERANCE	.00000	.00000
TOLERANCE	.00000	.00000
AVERAGE HIGH	.00007	.00007
TOLERANCE	.00000	.00000
TOLERANCE	.00000	.00000
MAXIMUM ERROR	.00167	.00138
TOLERANCE	.00000	.00000
MAX SLOPE VAR	.00200	.00200
TOLERANCE	.00000	.00000

PART NAME : SPINDLE TIME : 17:26:56 SERIAL 0

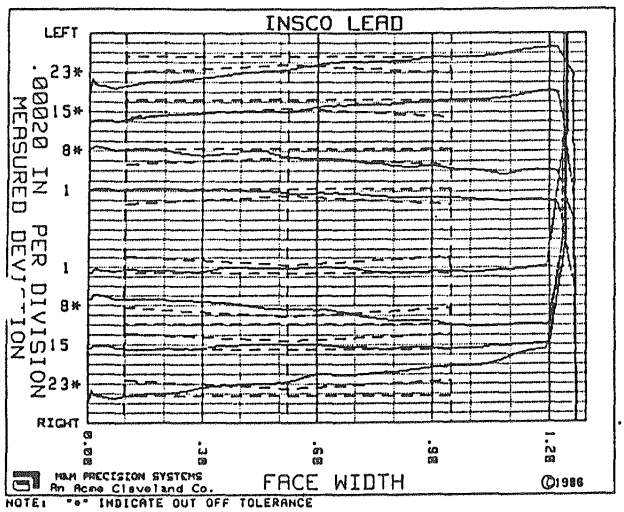

NOTE: "*" INDICATE OUT OFF TOLERANCE

TOOTH	LEFT FLANK SLOPE	LEFT FLANK ERROR	LEFT FLANK HIGH	TOOTH	RIGHT FLANK SLOPE	RIGHT FLANK ERROR	RIGHT FLANK HIGH
1	-.00021	.00020	.00003	1	.00001	.00012	.00006
8 *	-.00039	.00040	.00010	8 *	.00054	.00051	.00007
15 *	.00037	.00042	.00003	15	-.00002	.00010	.00005
23 *	.00062	.00062	.00006	23 *	-.00063	.00063	.00004

L.S. BEST FIT LINE TYPE ANALYSIS BETWEEN SPECIFIED SEGMENT: C1 AND C3
AGMA TOLERANCE : Q11.0
MIN AGMA ACHIEVED : Q 7.0

	LEFT FLANK	RIGHT FLANK
AVERAGE SLOPE	.00010	-.00003
TOLERANCE	.00000	.00000
TOLERANCE	.00000	.00000
AVERAGE HIGH	.00006	.00005
TOLERANCE	.00000	.00000
TOLERANCE	.00000	.00000
MAXIMUM ERROR	.00062	.00063
TOLERANCE	.00000	.00000
MAX SLOPE VAR	.00102	.00117
TOLERANCE	.00000	.00000

PART NAME : 10195-1-XX TIME : 17:15:16 SERIAL 0

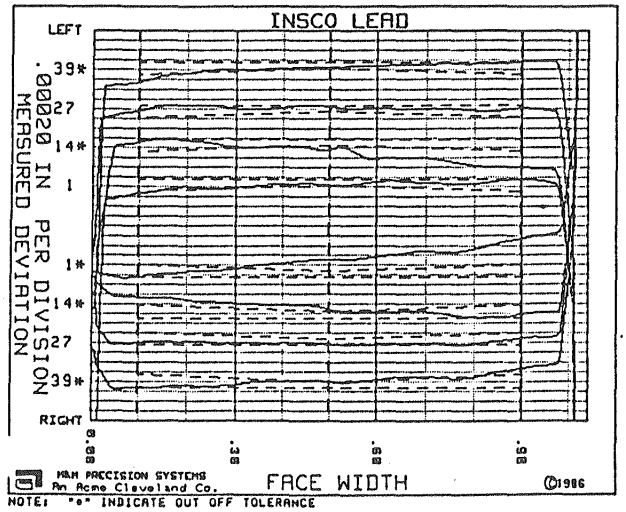

NOTE: "*" INDICATE OUT OFF TOLERANCE

TOOTH	LEFT FLANK SLOPE	LEFT FLANK ERROR	LEFT FLANK HIGH	TOOTH	RIGHT FLANK SLOPE	RIGHT FLANK ERROR	RIGHT FLANK HIGH
1	.00019	.00029	.00005	1 *	-.00066	.00077	.00007
14 *	-.00062	.00060	.00012	14 *	.00044	.00042	.00007
27	-.00008	.00014	.00006	27	.00002	.00015	.00004
39 *	.00029	.00042	.00004	39 *	-.00038	.00040	.00006

L.S. BEST FIT LINE TYPE ANALYSIS BETWEEN SPECIFIED SEGMENT: C1 AND C3
AGMA TOLERANCE : Q11.0
MIN AGMA ACHIEVED : Q 5.0

	LEFT FLANK	RIGHT FLANK
AVERAGE SLOPE	-.00006	-.00012
TOLERANCE	.00000	.00000
TOLERANCE	.00000	.00000
AVERAGE HIGH	.00007	.00006
TOLERANCE	.00000	.00000
TOLERANCE	.00000	.00000
MAXIMUM ERROR	.00060	.00077
TOLERANCE	.00000	.00000
MAX SLOPE VAR	.00091	.00110
TOLERANCE	.00000	.00000

FIGURE 24 - SPINDLE GEAR ASSEMBLY, SERIAL NO. 9
LEAD INSPECTION

As mentioned previously, the micrometer measurements of the TTC spindle gear assembly fixture do not account for lead variations per se. Additional rolling surface and gear runout measurements were made on spindle gear assembly serial numbers 01, 02, 03, 04, 07 and 08 using a setup as shown by Figure 25. The rolling surface measurements that were made included a physical measurement of the diameters "A" and "C" and a check of the cylindricity of the surfaces "B" and "D". In addition, each gear was fitted with four pins as designated by the #1, #2, #3, and #4 locations on Figure 25. Gear runout was checked over the pins at these four locations. The 51-tooth output planet gear is designated by "E". The fixed planet gear and the input planet gear are designated by "F" and "G", respectively. The summary of these measurements are presented in Table 21.

TABLE 21

SPINDLE GEAR ASSEMBLY ROLLING SURFACE AND GEAR RUNOUT MEASUREMENTS

	S/N 01	S/N 02	S/N 03	S/N 04	S/N 07	S/N 08
"A" Diameter	2.8000	2.7995	2.8000	2.8000	2.8005/ 2.8000	2.8005
"B" Cylindricity	.0003	.0005	.0005	.0004	.0003	.0002
"C" Diameter	2.8000	2.8000	2.7995/ 2.8000	2.8000	2.8005/ 2.8000	2.8000
"D" Cylindricity	.0005	.0005	.0009	.0008	.0006	.0006
"E" #1	.0000	.0000	.0000	.0000	.0000	.0000
"E" #2	-.0015	.0000	.0020	-.0010	.0000	.0000
"E" #3	-.0010	.0005	.0020	.0005	.0015	.0004
"E" #4	.0003	.0006	.0005	.0000	.0015	.0005
"F" #1	.0000	.0000	.0000	.0000	.0000	.0000
"F" #2	.0000	.0005	.0005	-.0010	.0000	-.0015
"F" #3	.0001	-.0010	-.0010	-.0002	.0005	.0010
"F" #4	.0003	.0010	-.0010	.0005	.0010	.0000
"G" #1	.0000	—	.0000	.0000	.0000	.0000
"G" #2	.0005	—	.0003	-.0005	.0000	-.0010
"G" #3	.0010	—	-.0020	-.0015	.0000	-.0015
"G" #4	.0008	—	-.0003	.0000	.0005	-.0008

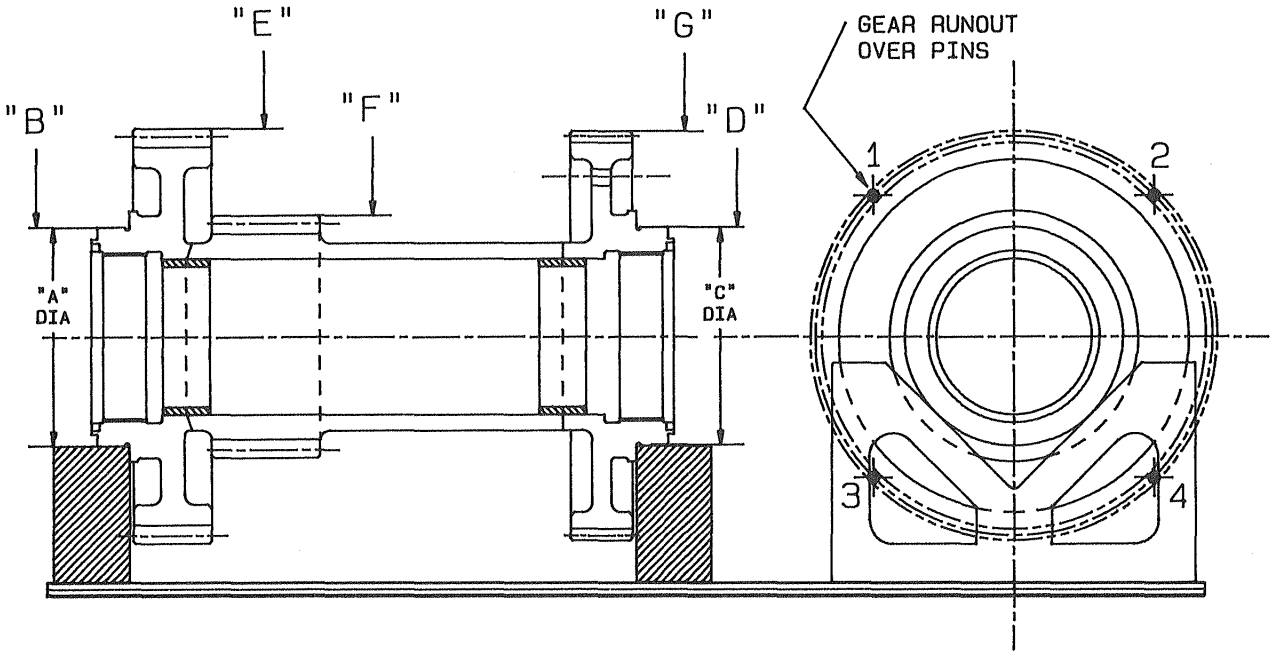

FIGURE 25 - SETUP FOR ROLLING SURFACE AND GEAR RUNOUT MEASUREMENTS

No significant variations within the measured data were observed. It was postulated that the high lead variations reported by the third party might have resulted from some inaccuracies associated with the inspection setup used by the third party or from a manufacturing error--either the lead was not correct in the first place or the weld manufacturing of the gear blanks in the area of the weld were not accurate and when the spindles were clamped some minor misalignment might have occurred.

As the gear tooth accuracy of the subject gears was certified by the gear manufacturer and since the gear manufacturer refused to comment on the third party's inspection, the assembly and testing continued.

It should be noted that once the gear system is subjected to operational loads, gear tooth contact and wear patterns can be observed and the question of lead error can be answered. If there is a uniform polish across the entire face width of the spindle gears on all of the spindles, then no further corrective measures need to be considered. If, however, some corner loading appears, the question might need to be raised and resolved.

5.2 SABP Assembly Fixture

The subject of gear timing and spindle gear tooth meshing requirements was addressed in Section 4.1.8. In addressing the topic of assembly, it was noted that to preclude the possibility of erroneous assembly (which incidently is possible to do), a foolproof system must be provided by the design engineer. Such a system was described in detail in Section 4.1.8 and a photograph of the actual assembly fixture is shown below in Figure 26. Using this assembly fixture, the spindles can be positioned accurately and held in place while the sun gear and the meshing ring gear are engaged. Once this engagement is made, the subassembly can be removed from the fixture and the final assembly can be made without the danger of having any of the spindles miss-index. The above procedure was successfully used over 30 times during this program.

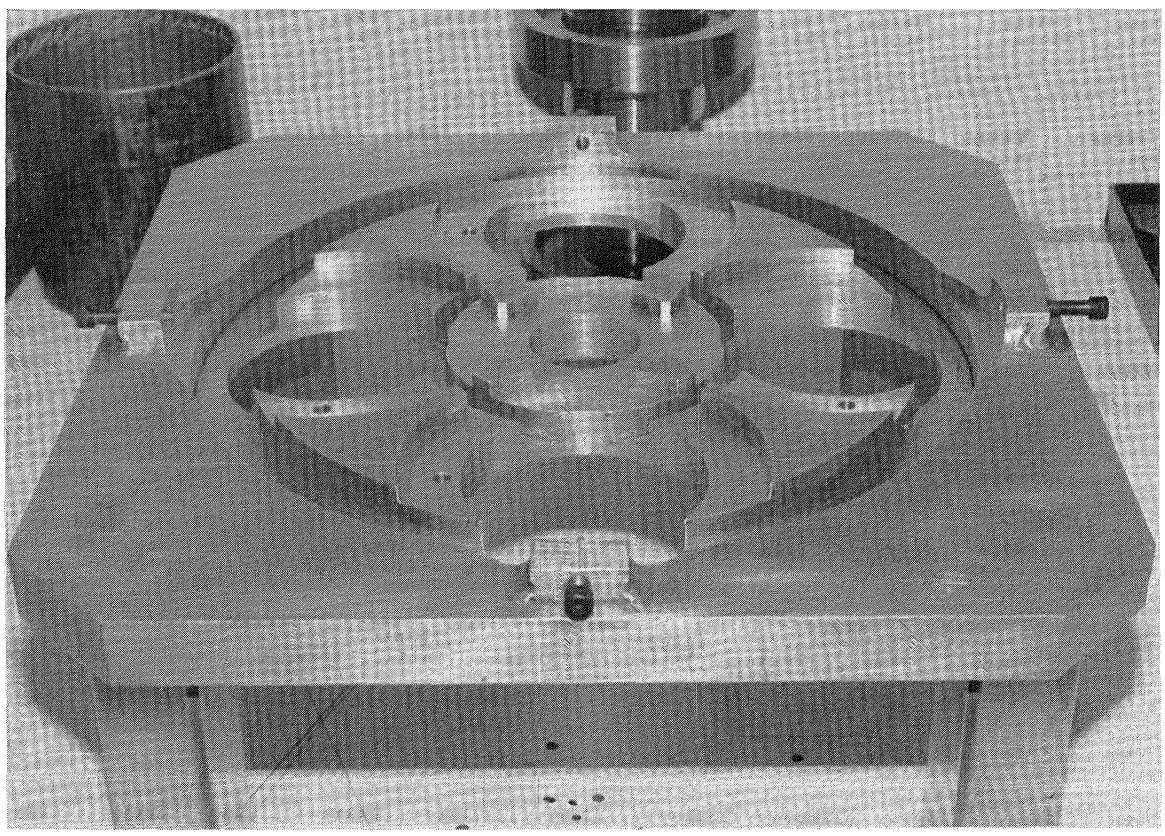

FIGURE 26 - PHOTOGRAPH OF SPINDLE INSTALLATION FIXTURE

5.3 Materials and Processes

5.3.1 Gears

All external gears were made from AMS6260 steel heat treated to 32 to 38 R_c and case carburized. The internal gears were made from nitriding steel AMS 6415 (4340). The gear blanks for the internal gears were rough machined, through hardened to 32 to 38 R_c, stress relieved, and final machined prior to gear tooth and spline cutting.

As noted in Section 3.2, the requirement for final nitriding of the internal gear teeth was waived for the prototype units. It was felt that through hardened ring gears had adequate strength for prototype testing and that gear tooth polishing of through hardened gears was superior to nitrided gears.

5.3.2 Rolling Rings

The rolling rings, which react gear tooth separating forces and centrifugal forces, were made from 52100 bearing steel heat treated to 59 R_c minimum.

5.3.3 Gear Housing

All gear housings were made from 356-T6 aluminum sand castings. The decision to use aluminum versus the more traditional magnesium was based on the schedules of the casting houses as they related to the overall program schedule. Although some minor shrinkage problems were encountered during the initial pouring of the main housing, they were solved by the casting house by changing its parting and by the application of some heaters. All final castings, after heat treating, were subjected to penetrant inspection and were found to be free of defects.

6.0 TEST

6.1 General

A series of tests consisting of lubrication flow tests, static torque tests, and no-load spin tests were conducted on each gear unit. The primary purpose of these tests was to verify the calculated oil flow rates, establish spiral bevel gear tooth patterns under static torque loads, and to record gearbox temperatures at various locations, gearbox vibrations in at least three planes, and airborne noise while running the unit under no-load conditions at various input speeds.

The final test stand setup is shown schematically by Figure 27. The test gearbox is mounted to the test stand structure. It is driven by one SCR controlled 10 HP variable speed DC motor with a speed increasing belt drive in series with a speed up gearbox. The speed increase ratios of the belt drive and the gearbox are 4.5:1 and 4:1, respectively. Speed of the motor is sensed by a pulse counter on the motor shaft and read out digitally. This readout is then used to establish input speed to the gearbox. The major components of the drive system are also mounted to the test stand structure. The drive system is connected to the gearbox by a high speed mechanical coupling.

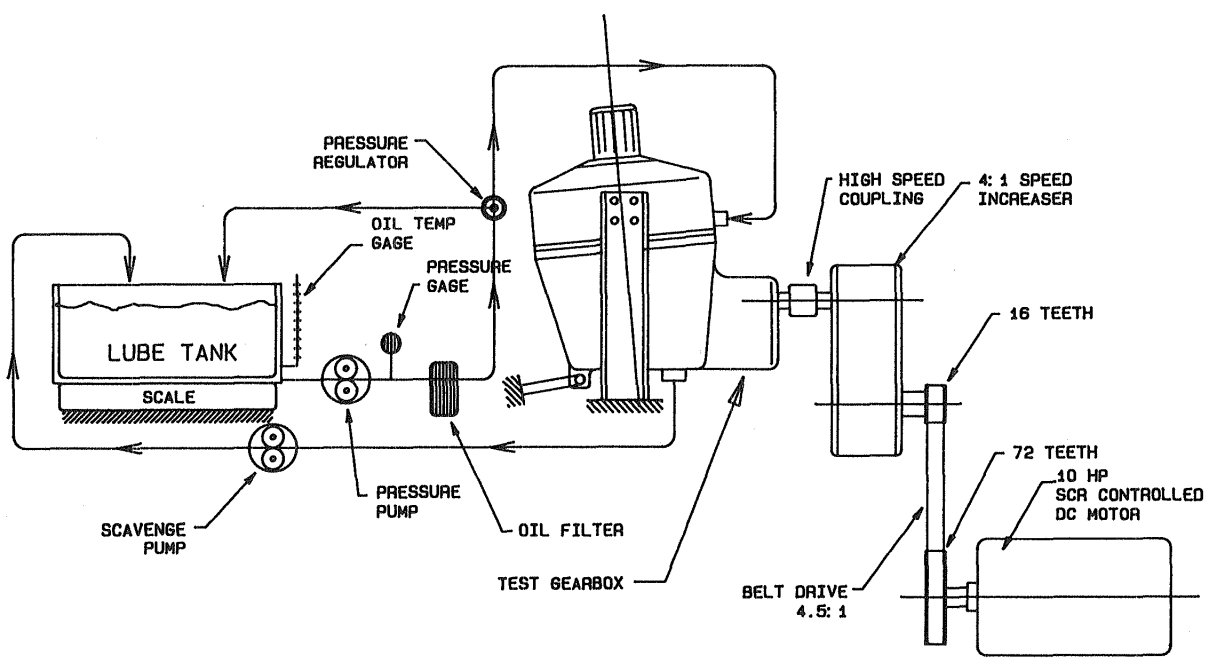

FIGURE 27 - SCHEMATIC, TEST STAND SETUP

The lubrication system is separately located from the test stand in its own structure. A pressure pump and adjustable pressure regulator supply oil from the oil tank to the gearbox. A scavenge pump returns oil from the gearbox to the oil tank. The tank is mounted on a scale that indicates changes in the weight of oil contained in the tank. A temperature gage indicates temperature of the oil in the tank. A pressure gage and a two-stage automotive type oil filter are installed in the pressurized oil supply line. Figure 28 is a photograph of the test stand setup.

FIGURE 28 - PHOTOGRAPH OF TEST STAND SETUP

Instrumentation used during the testing is shown schematically by Figure 29. It includes temperature, vibration and noise sensors.

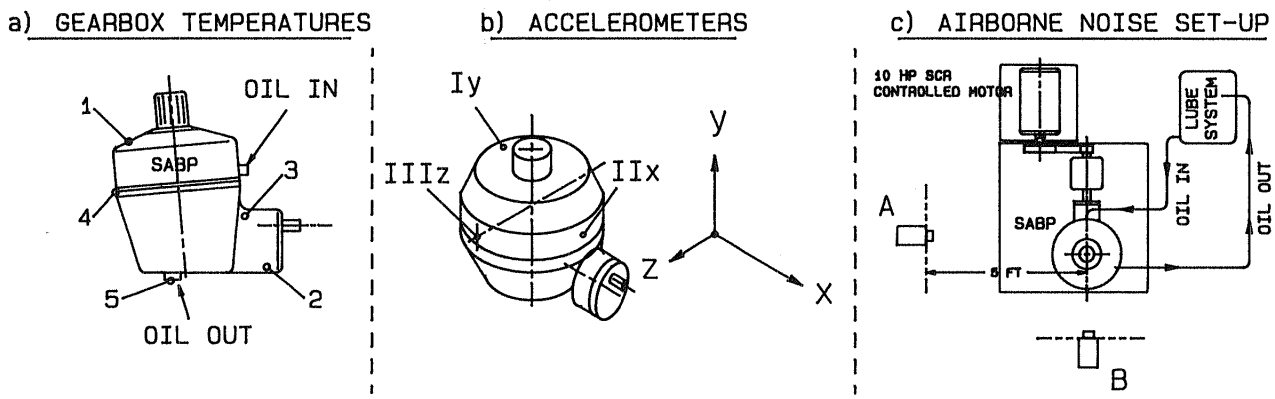

FIGURE 29 - SCHEMATIC ILLUSTRATION OF TEST INSTRUMENTATION

Figure 29a shows the location of five (5) thermocouples for recording gearbox temperatures. Oil-in temperature was also recorded. Digital readout equipment is used.

Figure 29b shows the location of three accelerometers for recording gearbox vibrations in three planes as designated by the directions "X", "Y", and "Z". The equipment used includes a real-time vibration analyzer using a Fast Fourier Transform system. Data is recorded on a hard-copy plotter.

Figure 29c shows a schematic plan view of the test setup and the two locations "A" and "B" where a sound level meter was placed for recording airborne noise.

6.2 Oil Flow Tests

Oil flow tests were conducted on both the Model 85G1-1 S/N 01 and S/N 02 gearboxes. The oil used for the tests was MIL-L-23699. All of the tests were conducted with the oil in at room temperature. For the oil flow series of tests, only the lubrication system was turned ON. The test gearbox was not connected to the drive system; thus, all gears and bearings were stationary during the oil flow tests. A schematic illustration of the test setup is shown by Figure 30.

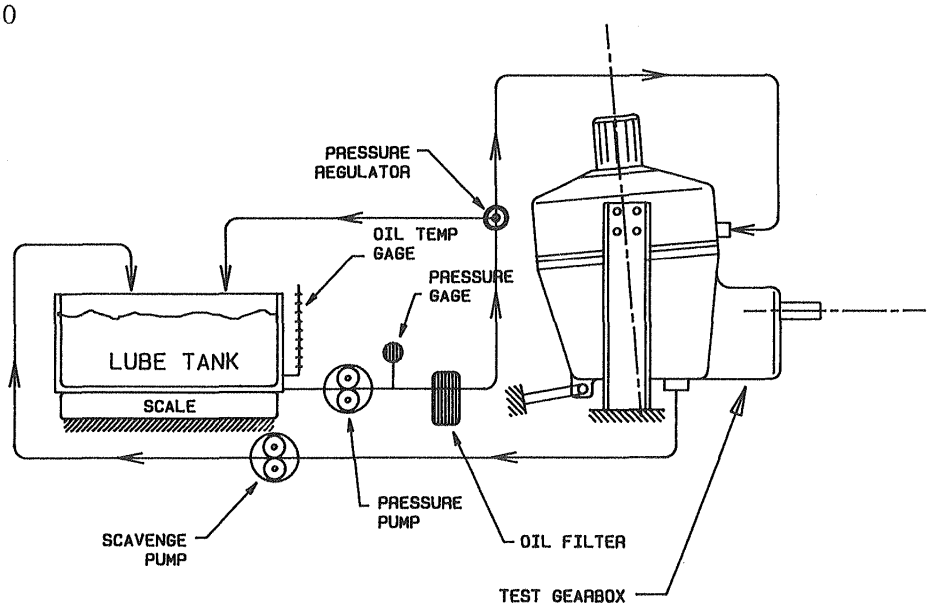

FIGURE 30 - SCHEMATIC, TEST SETUP FOR OIL FLOW TESTS

Oil flow rates were determined for oil inlet pressures to the gearbox at 20, 30, 40 and 50 psig. The procedure used for conducting the tests is as follows:

a. Run the pressure pump only and set the desired pressure.

b. Run the pressure pump continuously for one (1) minute and record the weight change of the lube tank. This is the actual flow rate at the given pressure.

c. Repeat each pressure run at least twice to insure data repeatability.

d. Run the scavenge pump after each pressure run and record the time required to scavenge the oil back into the lube tank.

The test results showed good correlation between the calculated values and the actual measured flows. Further there is good agreement between the oil flows recorded for both S/N 01 and S/N 02 gearboxes. The test result data are listed in Table 22 and plotted in Figure 31.

TABLE 22

MODEL 85G1-1 GEARBOX OIL FLOW TEST DATA

	Pressure (psig)	20	30	40	50
S/N 01	Flow (#/min)	14	20	26	32
S/N 02	Flow (#/min)	13	17.5	22.5	31

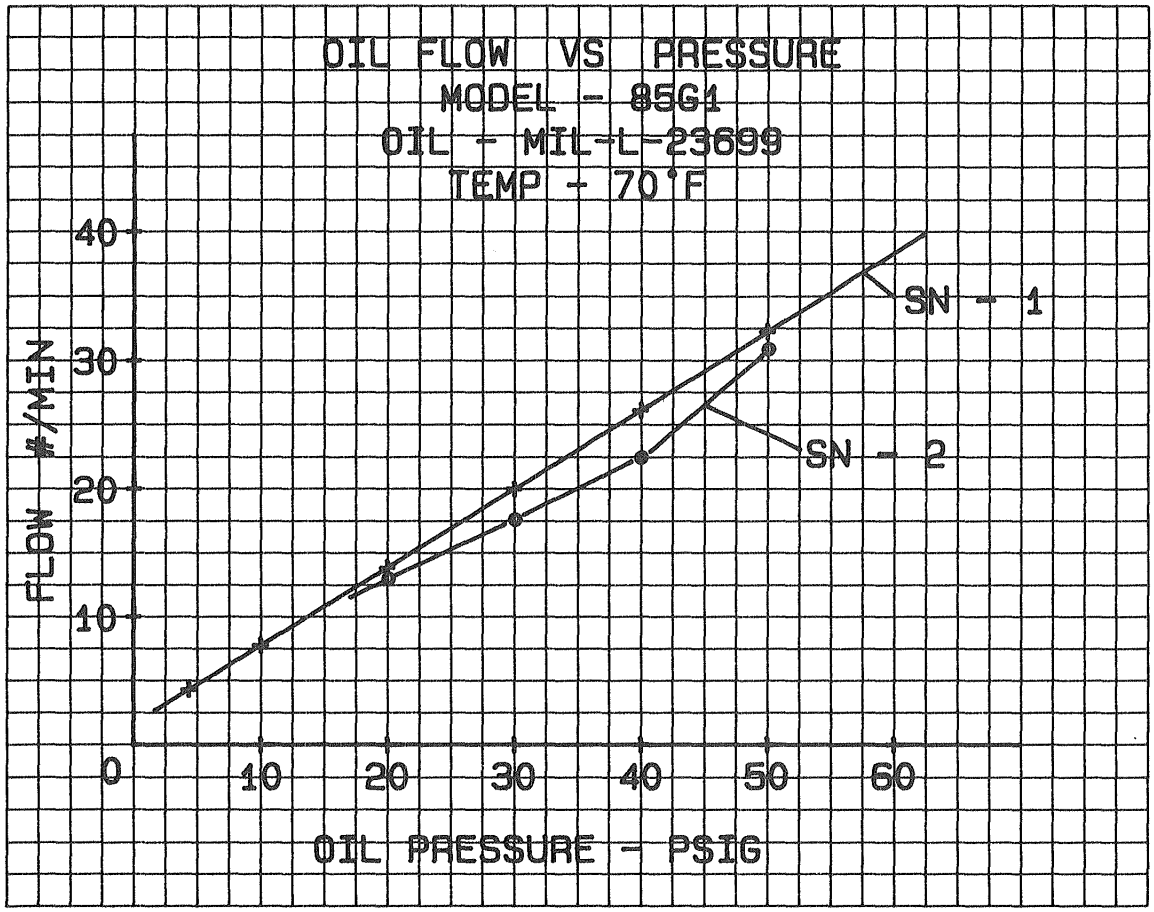

FIGURE 31 - PLOT OF OIL FLOW VS. PRESSURE

During the conduct of the oil flow tests when both the pressure pump and the scavenge pump were turned ON, the gearboxes did accumulate some oil, i.e. the scale supporting the lube tank showed a reduction in weight by approximately 3 to 4 pounds.

6.3 Static Torque Tests

Static torque tests were conducted on Model 85G1-1 gearbox, S/N 01. Figure 32 presents a schematic illustration of the test setup used to apply the various levels of input torque and to react the output torque to ground. Prior to the tests, all of

the gears were coated with soft red lead compound so that gear tooth engagement pattern could be observed. The results of this testing showed that the bevel gear contact patterns were good with no discernible movement under the applied input torque loads. The helical gear patterns were not visible. Due to structural limitations of the test stand, at approximately 500 in.-lbs. of input torque, the output torque arm started to yield and the test was discontinued.

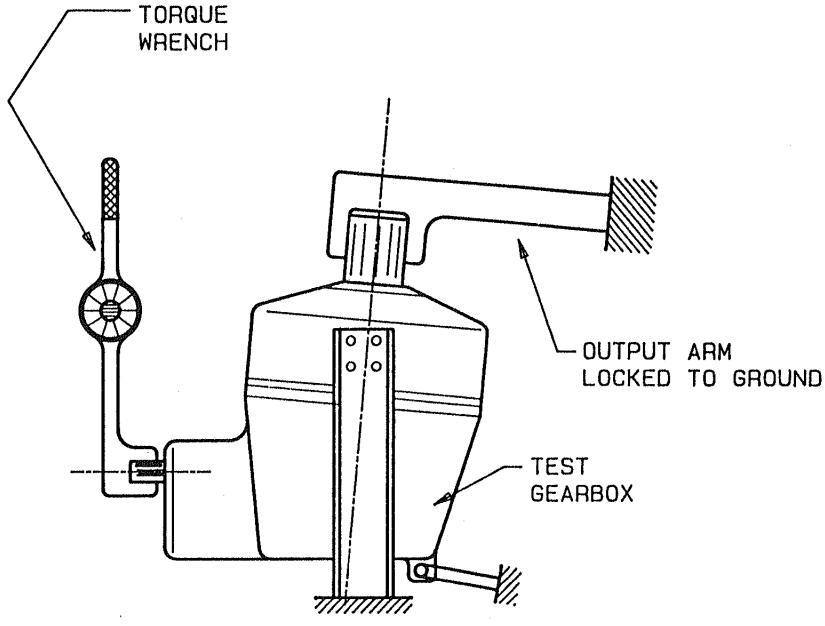

INPUT TORQUE "#	% OF RATED TORQUE	REMARKS
202	25%	NO DISCERNIBLE CHANGE IN BEVEL CONTACT AREA
405	50%	NO DISCERNIBLE CHANGE IN BEVEL CONTACT AREA
607	75%	
810	100%	AT APPROX. 500"#, OUTPUT TORQUE ARM STARTED TO YIELD - TEST WAS TERMINATED

FIGURE 32 - STATIC TORQUE TEST SETUP

6.4 Dynamic No-Load Spin Tests

The spin testing was conducted in two parts. During the initial spin testing, a 3 HP SCR controlled DC motor was used. Figure 33 shows a schematic illustration of the initial test rig.

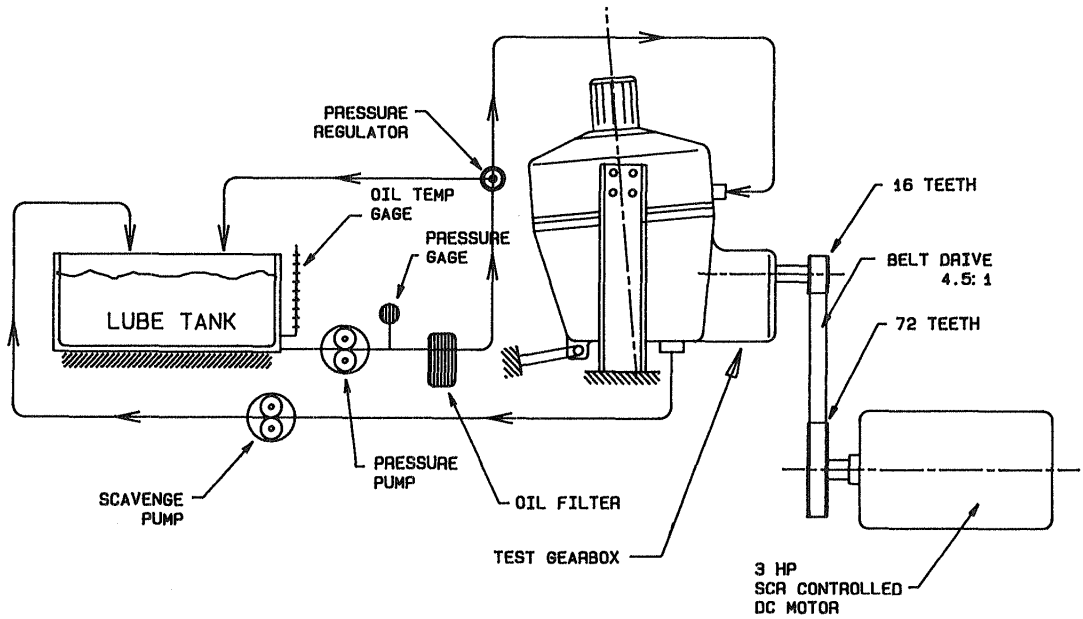

FIGURE 33 - SCHEMATIC, INITIAL 3 HP SPIN TEST SETUP

During the initial testing, the input speed was limited to approximately 9,000 rpm. In order to reach the design speed of 35,000 rpm, a larger 10 HP SCR controlled DC motor was installed along with an additional 4:1 speed increasing gearbox and testing was continued. This final test setup was previously described in Section 6.1.

6.4.1 Initial Tests Using The 3 HP Motor Drive System

Initial spin testing of the Model 85G1-1 gearbox was accomplished at gearbox input speeds ranging from 3,000 to 8,000 rpm. Oil inlet pressure was controlled to 30 psig. The purpose of the testing was to record airborne noise levels recorded in decibels (dB), and the power required to drive the gearbox system at the various input speeds. Initial running of the S/N 01 gearbox showed the lube system, which was adjacent to the test stand, was noisy. It was thereby removed from the test cell area.

A series of six test runs were then conducted on the S/N 01 gearbox assembly.

The test data for the six tests are presented in Table 23.

TABLE 23

MODEL 85G1-1 SERIAL NO. 1 GEARBOX SPIN TEST DATA
(3 HP DRIVE MOTOR)

a.) ORIGINAL TEST

INPUT SPEED	dB	V	A	W	HP
3,000 RPM	75	80	3.5	280	.375
4,000	77	96	4.0	384	.50
5,000	78	117	4.5	526	.70
6,000	79	140	5.0	700	.94
7,000	80	165	5.25	866	1.16
8,000	82	185	6.0	1110	1.48

b.) REPEAT TEST

3,000	74	75	4.0	300	.40
4,000	76	97	4.5	436	.58
5,000	77	126	5.0	630	.84
6,000	79	145	5.5	797	1.06
7,000	80	168	5.8	974	1.3
8,000	82	182	6.1	1110	1.48

c.) OIL PRESSURE TURNED OFF

8,000	-	180	3.8	684	.91

d.) LUBE SYSTEM MOVED CLOSER

3,000	86	75	4.0	300	.40
4,000	87	100	4.5	450	.60
5,000	87	120	5.0	600	.80
6,000	88	145	5.5	797	1.06
7,000	89	165	6.0	990	1.3
8,000	88	190	6.1	1159	1.5

e.) OIL PRESSURE TURNED OFF

8,000	-	190	4.25	807	1.0

f.) OIL PRESSURE TURNED ON TO 20 psig

8,000	-	185	5.5	1017	1.37

Test "a" data show the original noise level and power data for input speeds of 3,000, 4,000, 5,0000, 6,000, 7,000, and 8,000 rpm. Test "b" was a repeat of test "a" and demonstrates excellent data repeatability. For test "c", the oil pressure was turned off momentarily. The results show a frictional loss of .91 HP leaving .57 HP attributable to oil churning. In an attempt to improve oil scavenging, the lube system components were again positioned close to the test stand setup and test "d" was conducted. The test data show an increase in noise but no change in power consumption; therefore, it was concluded that the scavenging was not improved. For test "e", the oil pressure was again turned off momentarily, and for test "f", it was turned back on at 20 psig. The results of these tests also indicate considerable oil churning.

A series of four test runs were conducted on the S/N 02 gearbox assembly. The oil pressure was again set at 30 psig. The test data for the four tests are presented in Table 24.

TABLE 24

MODEL 85G1-1 SERIAL NO. 02 GEARBOX SPIN TEST DATA
(3 HP DRIVE MOTOR)

a.) ORIGINAL TEST

INPUT SPEED	dB	V	A	W	HP
3,000 RPM	86	75	4.0	300	.40
4,000	87	100	4.5	450	.60
5,000	87	122	5.0	610	.81
6,000	88	145	5.04	730	.97
7,000	89	167	5.07	846	1.13
8,000	88	190	6.0	1140	1.52

b.) OIL PRESSURE TURNED OFF

8,000	-	190	4.25	807	1.08

c.) OIL PRESSURE TURNED ON TO 20 psig

8,000	-	185	5.5	1017	1.37

d.) UNIT DISASSEMBLED, INSPECTED, REASSEMBLED, TESTED

3,000					
4,000	87	75	4.0	300	.40
5,000	87	98	4.5	441	.59
6,000	88	120	5.0	600	.80
7,000	92	170	5.8	986	1.32
8,000	94	190	6.0	1140	1.52

Observations after the initial spin testing of the S/N 01 and S/N 02 gearbox assemblies were that the power consumption and noise generated were comparable between the two units and that there was good agreement and data repeatability between tests. Further, it was observed that the gear units ran quietly with no objectionable vibration.

It was also noted that the gear units were holding approximately 1 to 2 quarts of oil, i.e. the lube tank oil level decreased slightly during the speed running even though the scavenge pump was on continuously. Upon completion of any individual test run and after turning the drive motor off, the lube tank would eventually return to its original oil level. It was reasoned that some of the oil might be in the lube lines (hoses), some might be wetting the many surfaces in the gearbox, and that possibly there might be some areas where oil was collecting and not draining properly.

In order to continue testing at higher speeds, the test stand was modified to include a speed increaser gear unit capable of operation up to 35,000 rpm. The 3 HP motor was also replaced with a 10 HP motor. All other components, including gearbox mounting lubrication system and instrumentation, remained unchanged.

6.4.2 Test Using the 10 HP Motor Drive System

Prior to continuing the spin test, the modified test rig was run up to 35,000 rpm and various measurements were taken. See Figure 34 for a summary of the results noted. The primary purpose of this test was to collect noise data and power data required to drive the test rig at the various speeds up to 35,000 rpm without connecting the input shaft of the SABP to the motor. It was reasoned that having this data would permit a more accurate analysis of the power losses and noise levels as generated by the SABP gear unit. It is recognized that the noise and the power absorption data collected during a no-load test stand spin test would be different from the data recorded during power testing. However, it was reasoned that a no-load spin test would provide at least some indication of noise and power absorption. Figure 40 presents a plot of power absorbed versus input speed. A straight line relationship, similar to the power absorption noted in the earlier testing, can be observed between the power absorbed to drive the modified test rig and the output speed.

The results of the high speed portion of these tests are summarized in Figures 34 through 38 and cover both S/N 01 and S/N 02 gear units. A sample of the vibration data is shown in Figure 39.

Both gear units performed satisfactorily up to the 25,000 rpm input speed. During the testing of S/N 01 at the 25,000 rpm input speed level, several high speed couplings, which were a part of the test stand, failed and had to be replaced. It was also noted that the power level required to drive the gear unit did not stabilize and continued to increase at a rapid rate. After reaching an input power of approximately 10 HP, the test stand was shut off.

After the input coupling problem was resolved, testing of S/N 02 continued. Up to 25,000 rpm, both S/N 01 and S/N 02 gear units showed similar performance. At the 35,000 rpm input speed, the power level would not stabilize so the test was terminated. During this short run, oil foaming and a very rapid temperature rise in the input gear housing which contains the high speed gear mesh was observed.

It was reasoned that the input gear mesh was churning oil and that the oil was not being scavenged properly; thus, causing an increase in temperature and an increase in the power required to

PURPOSE: OBTAIN BACKGROUND NOISE & POWER CONSUMPTION OF THE TEST STAND ALONE

TEST SETUP

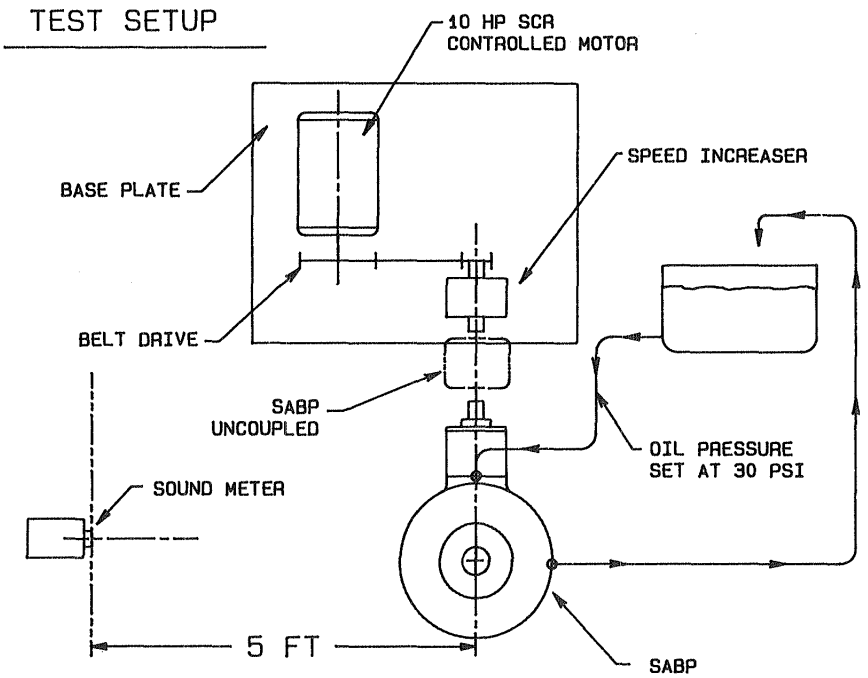

SPEED *	Db	V	A	W	HP	C° **
0	82	-	-	-	-	30
5,000	84.2	40	3	120	.16	30
10,000	84	75	3.5	262.5	.352	31
15,000	85	105	3.75	393.7	.527	32
20,000	86.5	135	3.75	506.2	.678	34
25,000	91	170	3.75	637	.854	40
30,000	90	205	3.75	768	1.029	45
35,000	91	240	3.75	900	1.207	48

* EACH SPEED POINT WAS HELD APPROX. 1 MIN
** RECORDED TEMPERATURES WERE NOT HELD FOR SUFFICIENT TIME TO REACH STABILIZED LEVELS.

FIGURE 34 - SUMMARY OF RESULTS OF 10 HP NO-LOAD SPIN TEST

NO-LOAD SPIN TEST
MODEL 85G1-1 SABP S/N - 1 DATE - 8/17/87

V	A	INPUT SPEED RPM	HP	OIL IN C°	GEARBOX TEMPERATURES 1	2	3	4	5	ACCELEROMETERS I*	II	III	NOISE A	B	TIME
45	15	5,000	.90	21	21	21	24	21	21	1**	2	3	88	92	8:30
80	20	10,000	2.1	21	21	26	33	24	24	4	5	6	92	96	
125	24	15,000	4.02	21	21	34	44	28	29	7	8	9	94	99	
150	26	20,000	5.2	23	23	34	53	32	36	11	12	13	96	105	
195	30	25,000	8.1		36	43	60	35	38	14	15		99	108	9:15 FINISH
		30,000	---	INPUT COUPLING FAILED						***					
		35,000													

GEARBOX TEMPERATURES

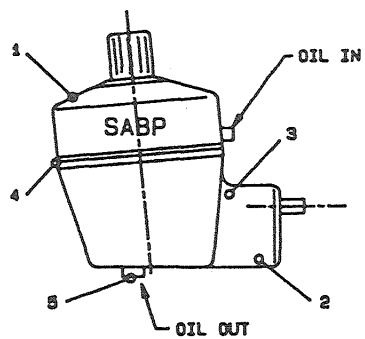

ACCELEROMETERS

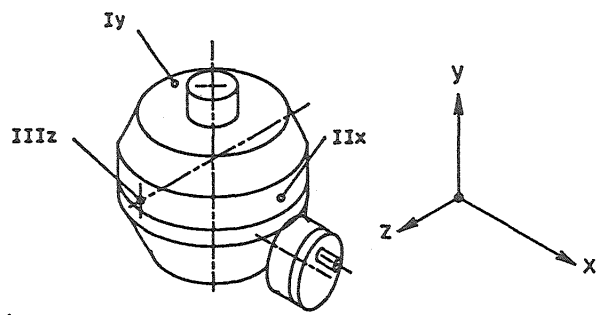

*Designates location of the accelerometer
**Designates vibration record number
***See Figure 39 for a sample run

AIRBORNE NOISE SET-UP

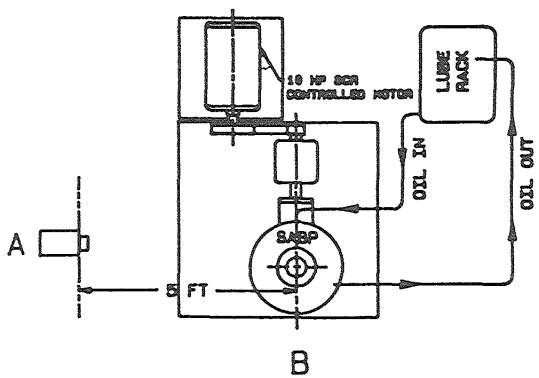

FIGURE 35 - NO-LOAD SPIN TEST DATA FOR SERIAL NO. 1

NO-LOAD SPIN TEST
MODEL 85G1-1 SABP S/N - 2 DATE - 8/27/87

V	A	INPUT SPEED RPM	HP	OIL IN C°	GEARBOX TEMPERATURES 1	2	3	4	5	ACCELEROMETERS I*	II	III	NOISE A	B	TIME
45	13	5,000	.78	23	23	23	24	23	23	16**	17	18	88	94	3:00 PM
75	20	10,000	2.01	27	23	26	29	25	26	19	20	21	91	98	
120	23	15,000	3.70	29	23	29	34	28	29	23	24	22	94	103	
150	25	20,000	5.0	32	24	35	38	33	36	25	26	27	94	99	
195	30	25,000	7.8	36	24	42	50	36	39	28	29	30	95	103	
	40	30,000	TEST TERMINATED BECAUSE AMPS DID NOT STABLIZE												
		35,000													

GEARBOX TEMPERATURES

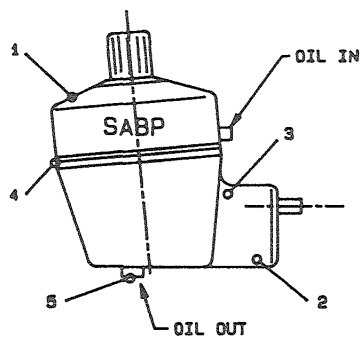

ACCELEROMETERS

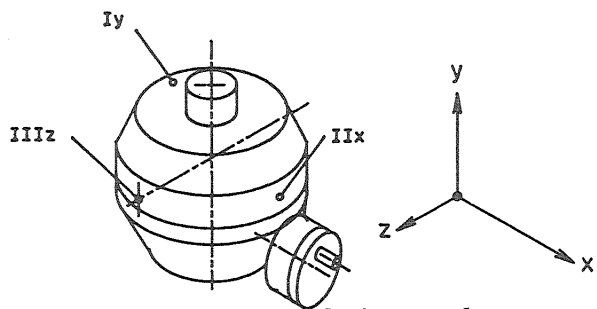

*Designates location of the accelerometer
**Designates vibration record number

AIRBORNE NOISE SET-UP

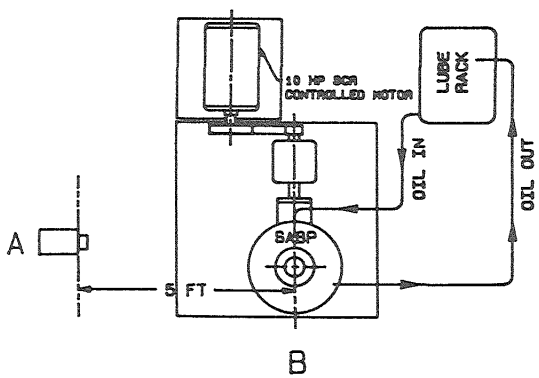

FIGURE 36 - NO-LOAD SPIN TEST DATA FOR SERIAL NO. 2

NO-LOAD SPIN TEST
MODEL 85G1-1 SABP S/N - 1 DATE - 8/27/87

S/N 1 WITH OIL BAFFLES
OIL PRESSURE = 20 PSI

V	A	INPUT SPEED RPM	HP	OIL IN C°	GEARBOX TEMPERATURES 1	2	3	4	5	ACCELEROMETERS I*	II	III	NOISE A	B	TIME
45	16	5,000	0.96	22		26				1**	2	3	83	92	
70	17	10,000	1.59	22		34				4	5	6	88	96	
115	20	15,000	3.08	22		44				7	8	9	94	106	
150	21	20,000	4.22	23		47				10	11	12	98	<110	
175	22	25,000	5.16			57				13	14	15	95	104	
		30,000								16	17	18	97	104	
250	23	35,000	7.80	25						19	20	21	94	103	

GEARBOX TEMPERATURES

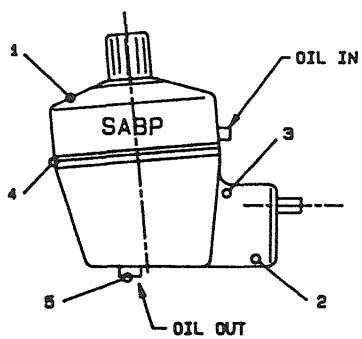

ACCELEROMETERS

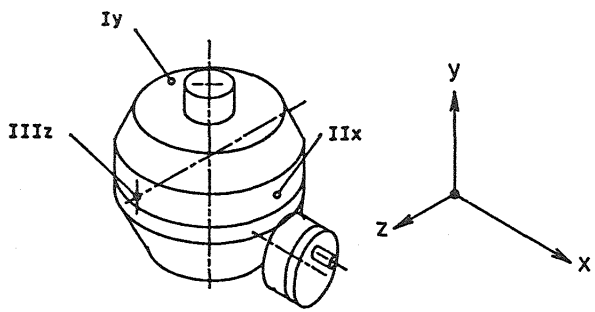

*Designates location of the accelerometer
**Designates vibration record number

AIRBORNE NOISE SET-UP

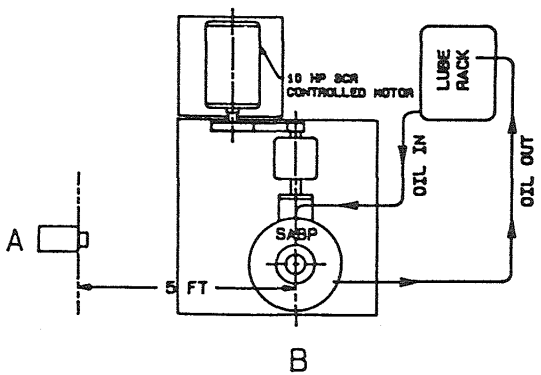

FIGURE 37 - NO-LOAD SPIN TEST DATA FOR SERIAL NO. 1 WITH OIL BAFFLES

NO-LOAD SPIN TEST
MODEL 85G1-1 SABP S/N - 2 DATE - 8/27/87

S/N 2 WITH OIL BAFFLE
OIL PRESSURE = 20 PSI

V	A	INPUT SPEED RPM	HP	OIL IN C°	GEARBOX TEMPERATURES 1	2	3	4	5	ACCELEROMETERS I*	II	III	NOISE A	B	TIME
45	16	5,000	.97	23		27				1**	2	3	87	93	
75	19	10,000	1.91			32				4	5	6	93	103	
110	21	15,000	3.10			39				7	8	9	107	110	
155	22	20,000	4.57			45				10	11	12	103	105	
		25,000													
		30,000													
		35,000													

GEARBOX TEMPERATURES

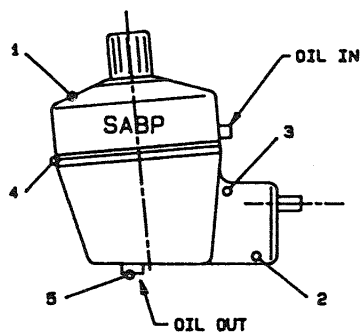

ACCELEROMETERS

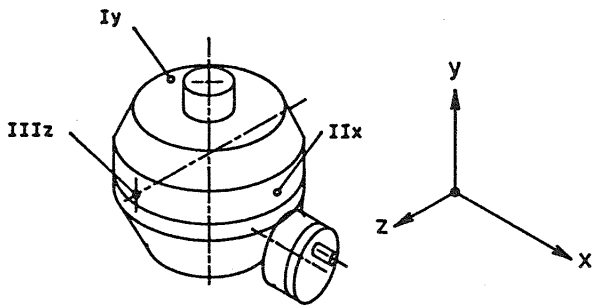

*Designates location of the accelerometer
**Designates vibration record number

AIRBORNE NOISE SET-UP

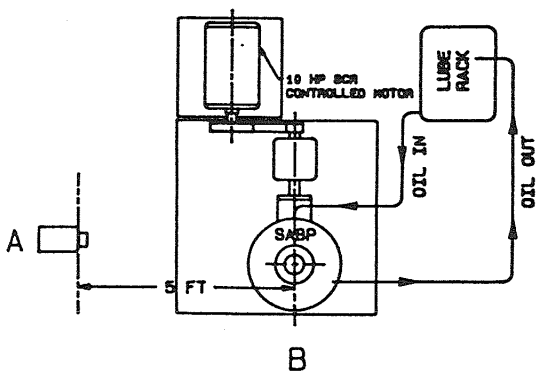

FIGURE 38 - NO-LOAD SPIN TEST DATA FOR SERIAL NO. 2 WITH OIL BAFFLES

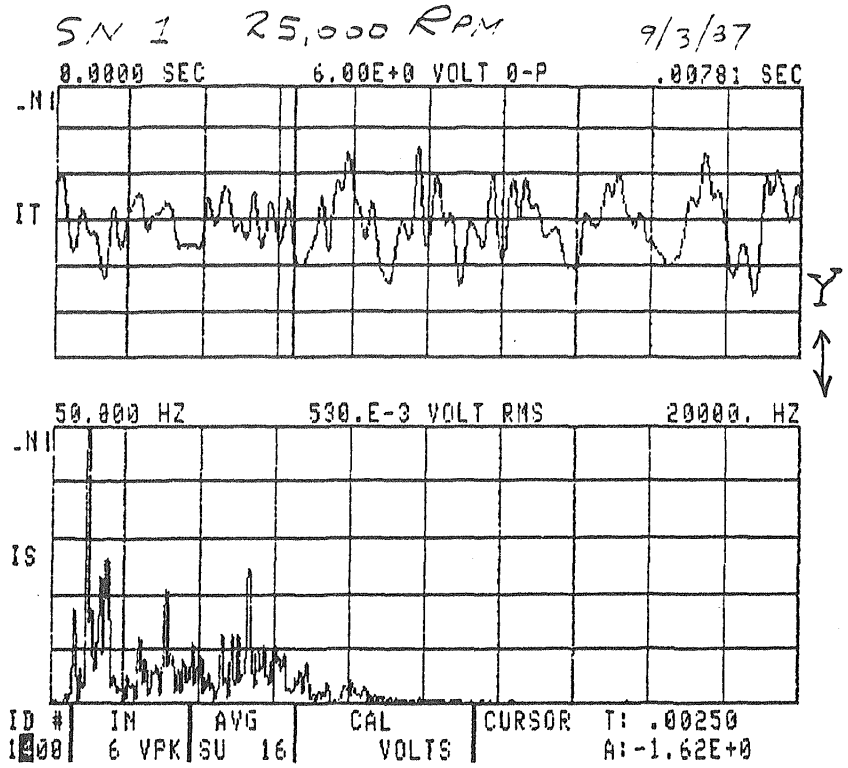

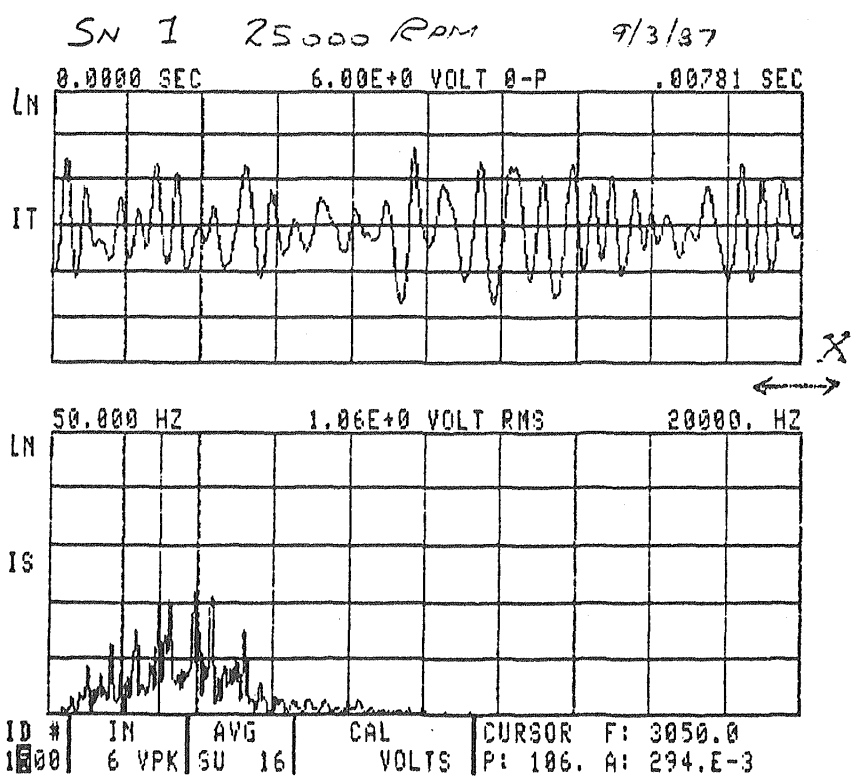

FIGURE 39 - SAMPLE VIBRATION PLOT FOR SERIAL NO. 1
AT 25,000 RPM

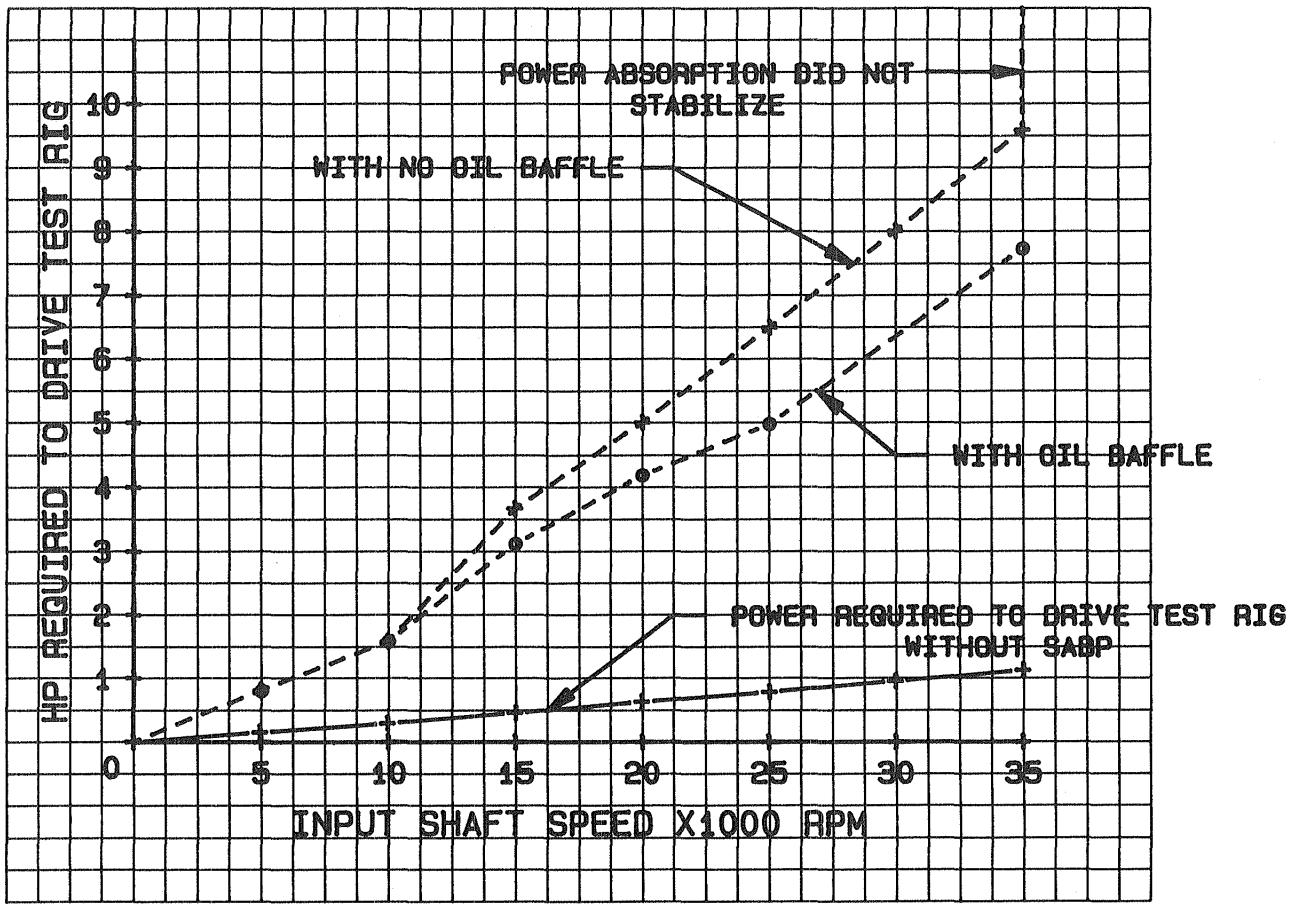

FIGURE 40 - NO-LOAD SABP SPIN TESTING VS. HP REQUIREMENT

sustain the speed. It was felt that if the oil scavenging could be improved in this area or if oil baffles could be incorporated into the gear housing, the oil churning problem would be alleviated.

As a first step, a decision was made to incorporate temporary oil baffles into the gear units and to repeat the tests. S/N 01 was then successfully run up to 35,000 rpm input speed. Figure 40 presents a plot of HP vs. rpm for the gearbox with and without oil baffles. A sudden rise in the power required to maintain the 35,000 rpm speed terminated this test. Once again, it was discovered that the problem was in the test rig itself. The bearings of the high speed increaser running at 35,000 rpm showed signs of distress. The bearings were replaced, and the test stand was put back into service.

Both the S/N 01 and S/N 02 units were installed and testing continued. At 20,000 rpm, the high speed test stand bearings failed again, and the testing was discontinued. Figures 37 and 38 present the raw data from these tests.

6.4.3 Gear Tooth Meshing Frequencies

The availability of sophisticated FFT vibration analyzers allows the test engineer to identify predominant vibration modes, accelerations levels, etc. Since the test engineer can view in real time such displays as "Instant Spectrum" "Instant Time", magnitude of accelerations "g", velocities "v", and displacements "d", it is necessary that a quick identification of the fundamental frequencies and their modes be available prior to testing. Figure 41 presents the results of gear meshing frequency calculations. Ability to capture these vibrations on tape and get a hard plot further allows the test engineer to study the details of vibrations to specifically identify the components exhibiting high amplitudes and to identify speed ranges where the unit is showing resonance.

In examining sixty (60) plots (20 in the X direction, 20 in the Y direction and 20 in the Z direction), the vibration data show that in the vicinity of 20,000 rpm input speed, a resonant condition is present. This is further correlated by noting that the magnitude of the noise measurement peaks at approximately 20,000 rpm. For example, S/N 01 at 20,000 rpm and at location A showed a reading of 98 dB. Increasing the input speed to 35,000 rpm the noise reading dropped to 94 dB.

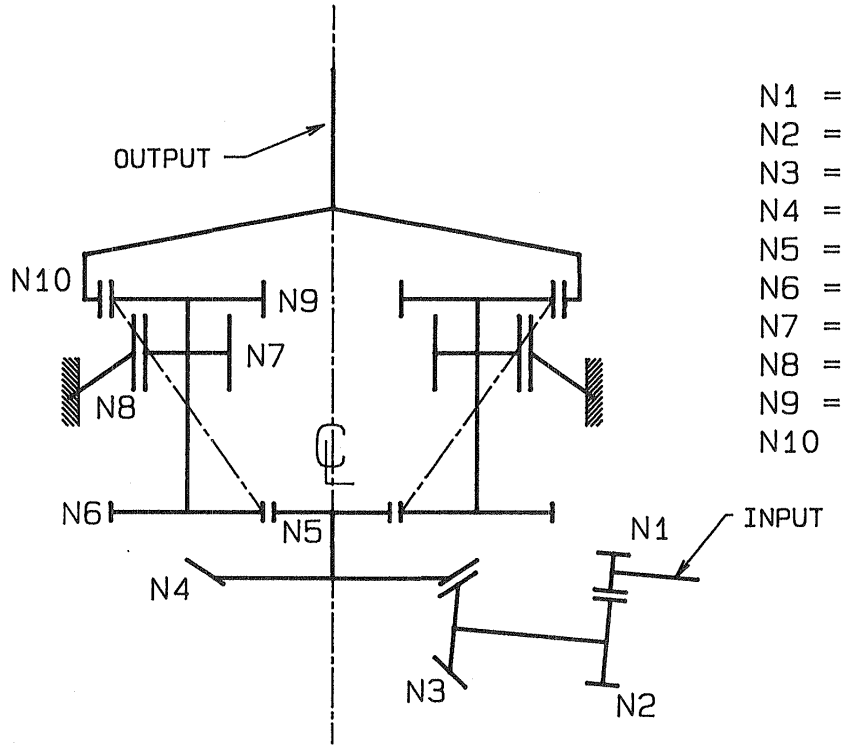

N1 = 23
N2 = 70
N3 = 37
N4 = 71
N5 = 36
N6 = 68
N7 = 29
N8 = 107
N9 = 51
N10 = 129

FUNDAMENTAL FREQUENCIES - ASSUME 3,000 RPM

	INPUT MESH	BEVEL MESH	INPUT SABP	SPINDLE ORBIT	FIXED MESH	OUTPUT MESH
	3,000	985	513	64		30
FUNDAMENTAL	1150	608	269	1.06	114.8	176.5
2nd MODE	2300	1215	538	2.12	229.6	353
3rd	3450	1824	807	3.18	344.4	529
4th	4600	2431	1076	4.24	459	706
5th	5750	3040	1345	5.30	574	882
6th	6900	3648	1614	6.36	689	1059
7th	8050	4256	4883	7.42	803	1235
8th	9200	4862	2152	8.48	918	1412
9th	10350	5472	2421	9.42	1033	1588
10th		6080	2690	10.60	1148	1765

FIGURE 41 - SABP 100:1 GEAR FREQUENCY REQUIREMENTS

INPUT MESH: F = (3000) (23) /60 = 1150 Hz

BEVEL MESH: F = (985) (37) /60 = 608 Hz

INPUT SABP:

SPINDLE ORBITING SPEED = 513/7.97 = 64 rpm

$S_0 = 7.97$ (SEE SECTION 4.1.5)

$$F = \frac{(\omega_{RELATIVE})\ (N)}{60}\ (n)$$

n = NUMBER OF SPINDLES ASSUMING SEQUENTIAL ENGAGEMENT

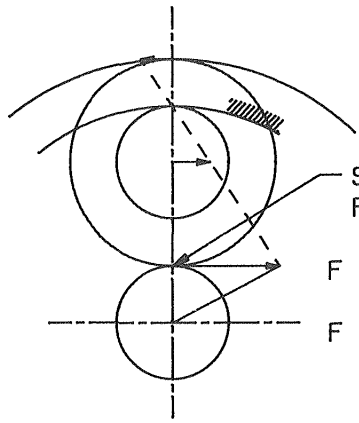

SUN MESHING FREQUENCY

F = (449) (36) /60

F = 269 Hz

ASSUME ONE SPINDLE IS PROUD

$\omega_R = \omega_{SUN} - \omega_{OR} = (513 - 64) = 449$

BECAUSE IT TURNS IN THE SAME DIRECTION

OR

INPUT SPINDLE MESHING FREQUENCY:

$\omega_R = (\omega_{SUN} - \omega_{OR})$ (GEAR RATIO) = (513 - 64) (36/68) = 237.7

$$F = \frac{(\omega_R)\ (n)}{60} = \frac{(237.7)\ (68)}{60} = 269 \text{ Hz}$$ CHECK

NUMBER OF TEETH IN N_7

$$\text{FIXED MESH: } F = \frac{\omega_N}{60} = \frac{(237.7)\ (29)}{60} = 114.8 \text{ Hz}$$

SPINDLE RELATIVE SPEED WITH RESPECT TO FIXED RING GEAR

OUTPUT MESH:

RELATIVE SPEED OF SPINDLE WITH RESPECT TO OUTPUT RING GEAR

= SPINDLE ORBITING SPEED - OUTPUT SHAFT SPEED

= 237.7 - 30 = 207.7

$$= \frac{(207.7)\ (51)}{60} = 176.5 \text{ Hz}$$

ORBITING FREQUENCY:

WHERE: $\omega = 64$

$i = 1$ UP TO 4

ASSUME ONE (1) SPINDLE IS PROUD

$$F = \frac{(\omega)\ (n)}{60} = \frac{(64)\ (1)}{60} = 1.06 \text{ Hz}$$

FIGURE 41 - SABP 100:1 GEAR FREQUENCY REQUIREMENTS Cont'd.

7.0 PHASE II EVALUATION

7.1 General Comments

In general, the manufacturing, inspection, assembly, and spin testing of the 85G1-1 transmissions were successfully completed. The gear units that were designed, manufactured and spin tested comply with the general requirements of the design specification and show low weight and low noise and vibration levels when spin tested at no load up to the design speed.

Several specific areas have been identified, which it is felt at this point in time, need further clarification, work, and testing. These concerns can be divided into four specific topics.

The first area concerns design and manufacturing gear tooth accuracy. Numerous questions have been raised throughout the subject program concerning the design accuracy levels specified on the detail manufacturing drawings. These questions include such areas as calculated involute modifications, if for example, .0003 to .0005 of an inch on a gear that is manufactured to AGMA quality 11 where allowable manufacturing errors such as center distance variations, runouts, tooth to tooth spacing errors, etc., exceed the value of the specified involute modifications.

The second area concerns the level of accuracy actually achieved during manufacturing. While the gear manufacturer has submitted to TTC signed "Certificates of Compliance" certifying that all gears are to print, inspection by another gear manufacturer questions the actual accuracy of these gears. The original gear manufacturer maintains that the gears are to print. It is difficult to resolve these questions since the dimensions in question are literally in the thousands of an inch area and are subject to a myriad of inspection parameters, including surfaces from which measurements are taken, certification of inspection equipment, etc.

Oil scavenging at high speeds is the third area of concern. It is recommended that consideration be given to expanding the high speed no-load testing to insure that there is no excessive oil churning at the transmission's rated speed of operation.

The fourth area concerns the resolution of a back loading problem observed during the spin testing of the SABP gear units. During the visual inspection of the SABP gear teeth after spin testing, contact on the unloaded side of the gear teeth was noted. Additional analysis, inspection, and testing is recommended to address and solve this problem.

Numerous other lessons have been learned during the subject program. For example, further insight into the EB welding process

has been gained which includes component design considerations, gear manufacturing considerations, as well as EB welding judgments. The following sections discuss these areas in more detail.

7.2 Spindle Gear Design

Of several techniques available for fabricating the spindle gear assembly, EB welding was one alternative that was considered during the detail design of the 85G1-1 gearbox. As the design proceeded, EB welding in conjunction with an aligning fixture was selected as the most promising technique for achieving the desired accuracy, gear tooth timing, and repeatability of gear relationships on the spindle gear assembly.

Other parameters also influenced the design of the spindle gear as the design process proceeded. These other parameters locked certain design details into place that were not the best from the standpoint of EB welding and would have been different if EB welding had been the criterion from design inception.

For example, as the fixed planet gear, P_f, is adjacent to the output planet gear, P_o, the space limitation imposed required that the EB weld be performed at an angle. The tapered joint edges on both gears are much more difficult to produce and to match than are the perpendicular joint surfaces used for welding the input planet gear, P, to the fixed planet gear shaft. Having the fixed and output planet gears adjacent to each other is a desirable feature that minimizes the length of the spindle gear assembly and can easily be accommodated if splines are used to join the gears together. An axial weld, whereby the web of the output planet gear would be joined to a diameter on the fixed planet gear shaft, was also considered but the radial weld was selected as a better alternative from a distortion standpoint.

Figure 42 illustrates some features which would have improved the spindle gear design from an EB welding point of view. The first feature is the aforementioned adequate clearance between P_f and P_o. Introducing this clearance causes the spindle length to grow if the same gear ratio geometry is to be maintained. In order to maintain the gear ratio, the center of each planet face width must lie on its respective operational radius. Because P_f and P_o are closer together than P_f and P, the amount of added clearance between P_f and P_o is amplified by the amount that the face of P must be shifted along its radius line to maintain a balance line. As illustrated in Figure 43, increasing the welding clearance to approximately .25 inches increases the length of the spindle by approximately .75 inches.

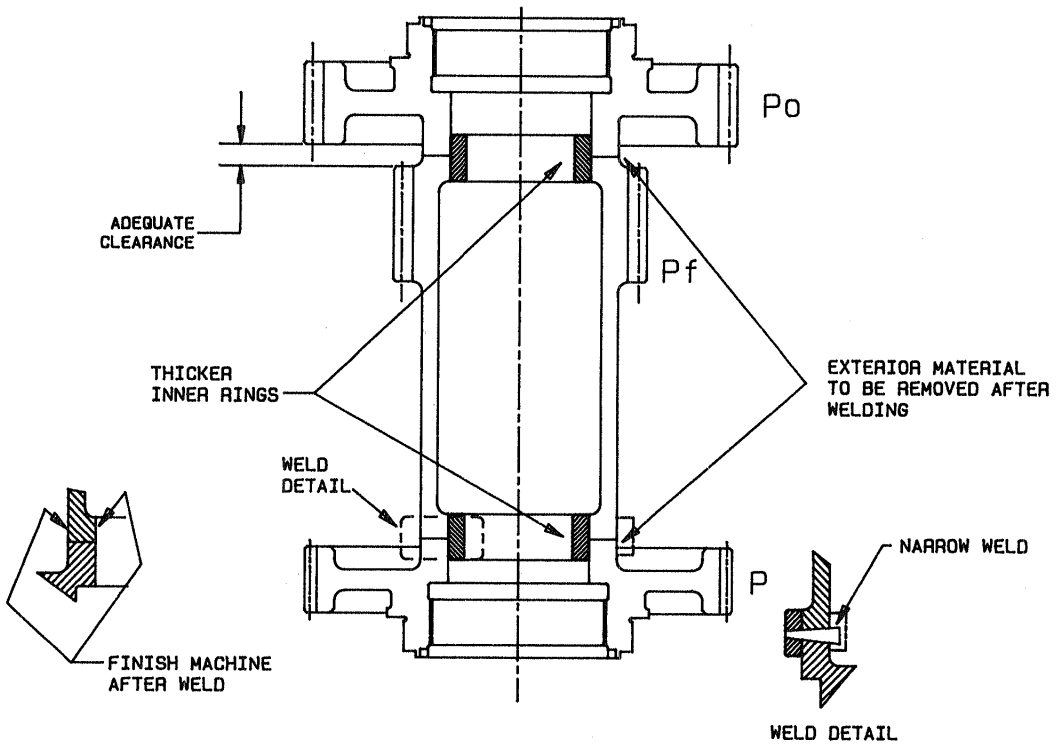

FIGURE 42 - IMPROVED SPINDLE GEAR DESIGN FOR EB WELDING

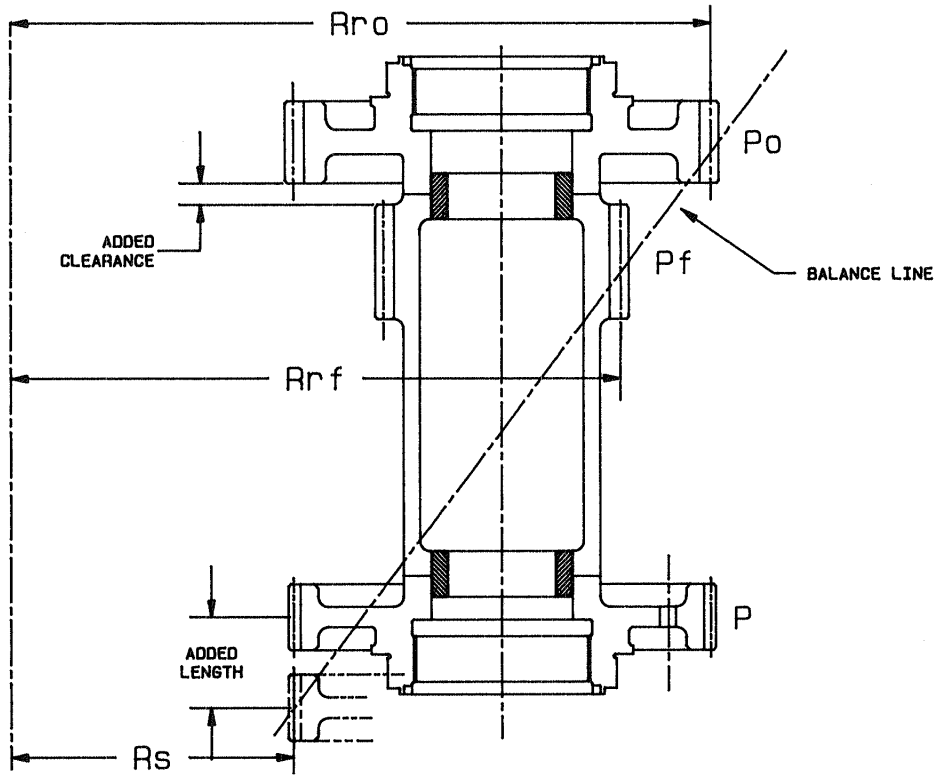

FIGURE 43 - EFFECT OF ADDED CLEARANCE BETWEEN FIXED AND OUTPUT PLANETS

Another feature shown on Figure 42 is the addition of exterior material that can be removed after welding to provide for a good finished surface without the inducement of stress risers. The thicker inner rings shown in Figure 43 allow for welding to a deeper overall length of weld which can be used to improve the welding technique.

7.3 EB Welding Technique

The present EB welding technique has one major shortcoming in terms of the fabrication objectives of the spindle gear assembly. The shortcoming is that the electron beam is aimed by a visual sighting of the joint area by the operator in a very dimly lit environment. The visual and manual inaccuracies involved and the need to hit the joint area leads to the use of an excessively wide beam which is accompanied by a higher than desired dumping of heat into the fabricated piece. Thus, for example, the width of the weld could be reduced from approximately .060 inches to less than .020 inches. As the joint line of accurate and highly finished parts is very difficult to see, TTC provided indentations spaced around the periphery of the joint to aid the EB operator. Although the units fabricated during this program were found to be satisfactory, any errors that may have occurred during this process would have meant scrapping expensive finished parts.

A technique should be developed whereby the joint lines of the spindle gear assembly could be accurately located and "zeroed in on" with a narrow high intensity beam. As shown by Figure 42, the thicker inner rings and additional external material, when used with a narrow weld, would produce a nearly parallel sided weld joint in the spindle gear piece when the extra inner and outer material is removed. A holding fixture for the piece that would actively restrain movement of the input and output planet gears in both directions, coupled with the narrow parallel sided weld, would provide an effective assembly procedure.

7.4 Alignment Fixture Design

The alignment fixture designed for the spindle gear assembly fabrication provided all of the functional features needed to produce repeatable assemblies. The need to closely control and maintain the orientation of the three gears on each spindle gear assembly is very important for smooth, quiet operation of a gear system comprised of two compound planetary gear trains working together. As discussed previously, the concept of the fixture design in each of the three gear tracks allows the measuring device to approximate a total composite gear check except for variation in lead.

In using the fixture as fabricated, it was noted that it required some degree of skill to be used correctly. This skill was acquired and became sharper as the operator used the device more and more. Using the fixture requires a light touch two-handed operation as the planet gears during the initial assembly have a stick-slip characteristic with the inner rings and as the micrometer stems holding the ball ends are rather flexible. In addition, the operator must be proficient at reading micrometers.

An improved spindle gear alignment fixture design would include the following automatic features:

a. Provide the planet gear rotation required to accurately align the tooth valleys of the planet gears.

b. Provide automatic depth penetration measurement.

c. Provide an automatic digital readout of the penetration depth measured.

7.5 Specific Weight

In the description of the 85G1-1 gearbox in Section 2.2 of this report, it was noted that a weight of 152 lbs., would be representative of a specific weight to power density ratio of 0.33 lbs./HP. This specific weight is based on the design requirement of 450 HP.

High contact ratio gear meshes were a primary design requirement for the 85G1-1 gearbox. Each mesh required a minimum contact ratio of three. For example, in Transmission Technology's Design Report TTC-85-04R, a typical AGMA218 Analysis Summary for the 23-tooth pinion and 70-tooth gear high speed mesh was presented. The contact ratio for the mesh is 3.3, the 10% over 3 allows for edge breaking, etc. The transmitted power used for the analysis is 450 HP. The following was extracted from the Life Rating Summary of that report:

	Pinion	Gear
Durability (Pitting) Life	2.59×10^{8} hrs	7.88×10^{8} hrs
Bending Fatigue Life	1.59×10^{10} hrs	3.13×10^{13} hrs

With this life capacity for continuous duty at 450 HP, the mesh can handle a higher HP for the design life of 10,000 hours. Based on the durability life of the pinion, this would be approximately 550 HP.

All of the gear meshes in the gearbox show high life predictions. The bevel gear set is classed as having infinite life. The life capabilities of the SABP fixed and output meshes could qualify for power ratings of over 500 HP when the ring gears are nitrided, and the SABP input mesh could qualify for a rating of over 600 HP.

The gear meshes were designed for a minimum contact ratio of three. If the original design effort were also directed toward power capability balancing throughout the gearbox, the unit might be rated at 550 HP or more with no noticeable change in weight. This would translate to a specific weight ratio of 0.27 lbs./HP which is considered to be representative of an advanced technology helicopter gearbox.

7.6 Potential Markets/Commercialization of SABP

During the performance of the subject contract, a work task entitled "Potential Markets/Commercialization of the SABP" was addressed. This effort was divided into four categories:

A. Preparation of Technical Specifications. In response to numerous potential applications, preliminary technical specifications, including gear arrangement and gear sizing, were evolved. These results were then compared to other conventional gear arrangements to derive quantitative data comparisons. The results of this work served as the basis for decision making, and if so selected, for the preparation of technical proposals.

B. Study of Potential Markets. An effort was made to keep abreast of the gear markets and new gear developments and to identify potential customers and their needs. In general, the observed new gear markets can be divided into three categories:

1. Existing commercial product lines
2. Special equipment
3. Government requirements

C. Strategies of Commercialization. Using the results derived from A and B above, a two-prong strategy was developed and is being actively pursued. The primary effort has been focused on seeking a dynamic firm interested in a new product line to replace or to augment its existing gear product lines, thus making the company more competitive and increasing its share of the gear market. It is felt that this is a sound strategy and a viable approach to the commercialization of the SABP.

However, to date, this effort has met with only limited success. At this time, it appears that the major obstacles which need to be overcome are the NIH factor, Not Invented Here, and that there are no units running in the field that use the SABP gear arrangement. It is felt that these obstructions can be negated to a large degree once several SABP type gear units are in the field and have accumulated several years of successful experience.

Numerous presentations have been made to some established U. S. gear manufacturing firms to briefly introduce them to the SABP gear concepts and to secure a commitment from these manufacturers to engage in offering this type of a drive as a new product line. This effort is continuing.

The second prong is an attempt to develop the SABP internally and to offer it in response to specific needs for a one-of-a-kind high performance gear unit as delineated by the requirements of various customers. This effort appears to have been more successful, although it is limited in its marketing potential in the short run. However, this approach might be the vehicle which will ultimately produce the commercialization of the SABP.

D. New Product Development. Some interest has been shown by private investors in developing the SABP as a private venture. This effort has resulted in the preparation of a comprehensive business plan and submission of the plan to an interested investment group. This plan is currently under evaluation. Future discussions are anticipated with the above-mentioned investors. Other investors with similar objectives are also being sought.

7.7 Forward Planning

The marketing strategies in place at this time for the development of the SABP shall be reviewed periodically, and if necessary, shall be updated to reflect market conditions and customer needs. The current interest by several U. S. helicopter designers and manufacturers shall be further pursued. Future meetings are planned with private financial investors. It is further planned to continue the dialogue with gear manufacturing firms to secure commitments for offering the SABP as a commercial product line.

8.0 CONCLUSIONS AND RECOMMENDATIONS

1. Two high speed gear units utilizing a new epicyclic gear arrangement called "Self-Aligning Bearingless Planetary" (SABP) in conjunction with high contact ratio single helical gears were designed, manufactured and spin tested up to 35,000 rpm. Using magnesium gear housings, the subject gear units show a design power density ratio of .33 lbs./HP. At a distance of five feet from the gear unit and at an input speed of 35,000 rpm, the overall test stand noise was 94 dB. Comparing these performance values to some published data on helicopter type power transmissions, the subject gear units are judged to be lighter and quieter. Accordingly, the objectives of the subject program as delineated in Section 2.2 have been successfully accomplished.

2. Both gear units (S/N 01 and S/N 02) showed similar performance characteristics during lubrication flow tests and during no-load spin testing. Thus, it is concluded that the design and manufacturing did not produce gear units with discernible differences in oil flow rates, vibrations, and airborne noise levels.

3. During spin testing up to approximately 20,000 to 25,000 rpm input speed, both gear units showed a linear relationship between speed and power. Above these speeds, the power required to drive the gear units became non-linear and showed a characteristic of increasing at an increasing rate as the input speed was increased. It was concluded that at the higher input speeds, oil churning and oil accumulation were absorbing the additional power. It is recommended that oil supply, oil draining, and oil scavenging be reviewed and modified. The area of the high speed gear mesh and associated bearings have shown rapid temperature increase at the high speeds. It is recommended that oil baffles and/or oil distribution/flows and scavenging be modified to alleviate this condition.

4. It is recommended that further spin testing be conducted using different thickness shims on the spiral bevel gear bearings to determine the effect that this variable has on the overall performance, vibration, and airborne noise.

5. Results of gear inspection conducted on one spindle (Spindle No. 9) by a third party shows significant discrepancies between the gear tooth accuracy certified by the gear manufacturer and the readings obtained by the third party. It is recommended that all gears be subjected to a detailed inspection by a third party.

Valuable design, manufacturing and performance data could be derived from such work activity. For example, if the gears were found to be not to print and if they were then reground to print and the spin test repeated using the same set up and if gear noise remained unchanged or was reduced by so many dB's, the design engineer would have a valuable tool for future designs.

6. During the speed testing portion of the subject program, as well as during the load testing of the SABP Model 82G1-1 by the NASA-Lewis Research Center, there have been indications that the unloaded side of the gear teeth show gear tooth polish. The cause of this backloading needs to be investigated and eliminated. Accordingly, it is recommended that this work activity be undertaken and completed as soon as practicable.

NASA
National Aeronautics and Space Administration

Report Documentation Page

1 Report No NASA CR-4155 AVSCOM TR-88-C-009	2 Government Accession No	3 Recipient's Catalog No
4 Title and Subtitle Design, Manufacture, and Spin Test of High Contact Ratio Helicopter Transmission Utilizing Self-Aligning Bearingless Planetary (SABP)		5 Report Date June 1988 6 Performing Organization Code
7 Author(s) Dezi Folenta and William Lebo		8 Performing Organization Report No TTC-87-07R (E-4049) 10 Work Unit No 1L162209AH76 505-63-51
9 Performing Organization Name and Address Transmission Technology Co , Inc 216 Horseneck Road Fairfield, New Jersey 07006		11 Contract or Grant No NAS3-24539
12 Sponsoring Agency Name and Address Propulsion Directorate U S Army Aviation Research and Technology Activity—AVSCOM Cleveland, Ohio 44135-3127 and NASA Lewis Research Center Cleveland, Ohio 44135-3191		13 Type of Report and Period Covered Contractor Report Final 14 Sponsoring Agency Code

15 Supplementary Notes

Project Manager, Dennis P Townsend, Propulsion Systems Division, NASA Lewis Research Center

16 Abstract

A 450-hp high ratio self-aligning bearingless planetary (SABP) for a helicopter application was designed, manufactured, and spin tested under NASA contract NAS3-24539 The objective of the program was to conduct research and development work on a high contact ratio helical gear SABP to reduce weight and noise and to improve efficiency The results accomplished include the design, manufacturing, and no-load spin testing of two prototype helicopter transmissions, rated at 450 hp with an input speed of 35 000 rpm and an output speed of 350 rpm The weight power density ratio of these gear units is 0 33 lb/hp The measured airborne noise at 35 000 rpm input speed and light load is 94 dB at 5 ft The high speed, high contact ratio SABP transmission appears to be significantly lighter and quieter than contemporary helicopter transmissions The concept of the SABP is applicable not only to high ratio helicopter type transmissions but also to other rotorcraft and aircraft propulsion systems

17 Key Words (Suggested by Author(s)) Self-aligning bearingless planetary (SABP) Transmission gears Helical gears Helicopter transmission	18 Distribution Statement Unclassified—Unlimited Subject Category 37

19 Security Classif (of this report)	20 Security Classif (of this page)	21 No of pages	22 Price*
Unclassified	Unclassified	111	A06

NASA FORM 1626 OCT 86 *For sale by the National Technical Information Service, Springfield, Virginia 22161 NASA-Langley, 1988

End of Document