LA-UR -88-3253

Los Alamos National Laboratory is operated by the University of California for the United States Department of Energy under contract W-7405-ENG-36

LA-UR--88-3253

DE89 000341

TITLE: NUCLEAR REACTOR POWER AS APPLIED TO A SPACE-BASED RADAR MISSION

AUTHOR(S): L. Jaffe, T. Fujita, R. Beatty, P. Bhandari, E. Chow, W. Deininger, R. Ewell, M. Grossman, T. Kia, B. Nesmith, T. Newell, C.F. Shih, J. Spanos, J. Stallkamp, J. Stevens, J. Shultz, A.K. Wanchoo, L. White, Jet Propulsion Laboratory, California Institute of Technology, Pasadena, CA

C. Bell, N-6, S. Voss, N-12, J. Metzger, A-4, Los Alamos National Laboratory

H. Bloomfield, J. Heller, NASA Lewis Research Center, Cleveland, OH

Submitted to: For publication in the Proceedings of the 23rd IECEC, Vol. 3, pp-255-261, 1988.

DISCLAIMER

MASTER

This report was prepared as an account of work sponsored by an agency of the United States Government. Neither the United States Government nor any agency thereof, nor any of their employees, makes any warranty, express or implied, or assumes any legal liability or responsibility for the accuracy, completeness, or usefulness of any information, apparatus, product, or process disclosed, or represents that its use would not infringe privately owned rights. Reference herein to any specific commercial product, process, or service by trade name, trademark, manufacturer, or otherwise does not necessarily constitute or imply its endorsement, recommendation, or favoring by the United States Government or any agency thereof. The views and opinions of authors expressed herein do not necessarily state or reflect those of the United States Government or any agency thereof.

By acceptance of this article, the publisher recognizes that the U S Government retains a nonexclusive, royalty-free license to publish or reproduce the published form of this contribution, or to allow others to do so, for U S Government purposes.

The Los Alamos National Laboratory requests that the publisher identify this article as work performed under the auspices of the U S Department of Energy.

Los Alamos Los Alamos National Laboratory
Los Alamos, New Mexico 87545

FORM NO 836 R4
ST NO 2629 5/81

DISTRIBUTION OF THIS DOCUMENT IS UNLIMITED

Proc. 23rd IECEC, vol. 3, pp. 183-190, 1988.

NUCLEAR REACTOR POWER AS APPLIED TO A SPACE-BASED RADAR MISSION

L. Jaffe, R. Beatty, P. Bhandari, E. Chow, W. Deininger, R. Ewell, T. Fujita, M. Grossman, T. Kia, B. Nesmith, T. Newell, C.F. Shih, J. Spanos, J. Stallkamp, J. Stevens, J. Stultz, A. K. Wanchoo, L. White
Jet Propulsion Laboratory, California Institute of Technology, Pasadena, California

C. Bell, D. Carlson, J. Metzger, S. Voss
Los Alamos National Laboratory, University of California, Los Alamos, New Mexico

H. Bloomfield, J. Heller
NASA Lewis Research Center, Cleveland, Ohio

To help determine system requirements for a 300 kWe space nuclear reactor power system, a space-based radar mission and spacecraft have been examined. The power system uses a fast-spectrum reactor fueled with enriched uranium nitride and cooled with liquid lithium. A shadow shield and an extendable boom protect the rest of the spacecraft from excessive nuclear radiation. The lithium coolant is pumped to a heat exchanger where it heats thermoelectric elements. Waste heat is removed by heat pipes and radiated to space. Electrical power from the thermoelectrics is conditioned and delivered to other spacecraft systems. The reactor operates at constant power and temperature; load changes are accommodated by dumping unneeded power through shunt resistors. The prime power is available at all times that the spacecraft is operational. The mass of the power system is 8,300 kg.

The radar antenna is a horizontal planar array, 32 x 64 m. Its mass, with support structure, is 42,000 kg. The mass of the nuclear reactor power system is 8,300 kg; of the whole spacecraft about 51,000 kg, necessitating multiple launches and orbital assembly. The assembly orbit is at 57 deg, 400 km, high enough to provide the orbital lifetime needed for assembly. Six Shuttle launches bring the various spacecraft assemblies and a chemically propelled upper stage to the assembly orbit. After assembly, the upper stage places the spacecraft in operational orbit, at 61 deg, 1088 km. Here it is deployed on radio command, the upper stage separates, the power system is started, and the spacecraft becomes operational. Electric propulsion is an alternative and allows deployment in assembly orbit.

INTRODUCTION

The SP-100 Project was established to develop and demonstrate feasibility of a space reactor power system (SRPS) at power levels of 10's of kilowatts to a megawatt. To help determine systems requirements for the SRPS, a mission and spacecraft were examined which utilize this power system for a space-based radar to observe moving objects. Aspects of the mission and spacecraft bearing on the power system were the primary objectives of this study; performance of the radar itself was not within the scope. The study was carried out by the Systems Design Audit Team of the SP-100 Project. Details

are contained in Ref. 1. Application of SRPS to another mission is described in Ref. 2.

MISSION AND SPACECRAFT REQUIREMENTS

Prior to the initiation of this study, 300 kWe (kilowatts electric) had been selected as the design power level for development and ground test of key portions of an SRPS. 300 kWe was assumed as the prime power level for the radar to maximize applicability of the study to the planned SP-100 effort. This level was not derived from quantitative analysis of radar needs. However, performance of the radar would be enhanced by using 300 kWe rather than lower power. For instance, objects with lower radar cross-section could be detected, and detection could be assured for shorter travel distance of the targets. (After completion of this study, the power level for SRPS development was changed to 100 kWe.)

The prime power is to be available at all times that the radar is in operational status. Thus, the radar could be used during all portions of its orbit. This contrasts with a solar-powered orbital radar, for which eclipses by the Earth generally limit availability of generated power to a portion of each orbit. Batteries must then be used to store the energy for the radar, and the available power, averaged over the orbit, will be less than that from the nuclear power system with the same peak input power. For the same peak power from the primary source, same radar power, and same number of spacecraft, a larger portion of the Earth's surface can be covered with nuclear-powered radars than with solar-powered.

Important mission and spacecraft requirements were:

The orbit shall be at 61 deg inclination and approximately 1100 km altitude;

The radar antenna shall be a horizontal planar array, 32 x 64 m;

The antenna shall have an unobstructed downward view;

No portion of the spacecraft outside the radar antenna rectangle shall be within 1 m of the plane of the nadir face of the antenna;

Preferably, no spacecraft elements shall extend beyond the antenna rectangle;

The pointing accuracy shall be plus or minus 0.2 deg.

The spacecraft angle about the nadir axis shall vary +/- 3.5 deg/orbit, synchronized with the latitude;

The operating life shall be 5 years;

The neutron fluence from the power system to the antenna and the rest of the spacecraft shall not exceed 10^{13} neutrons/cm^2, integrated over the operating life;

The gamma radiation fluence from the power system to the antenna shall not exceed 10^9 rad, integrated over the operating life;

The thermal flux from the power system to the rest of the spacecraft shall not exceed 1.4 kW/m^2;

The lowest frequency of free vibration of the spacecraft shall be no less than 0.01 Hz.

The 32 x 64 m antenna size was not derived from detailed examination of radar performance needs, but rather by scaling from an earlier study. The large antenna would reduce clutter and permit detection and tracking of objects with low radar cross-section.

SPACECRAFT SYSTEMS

Among the major spacecraft systems are the radar, SRPS, attitude control, command, data handling, and communications.

The radar antenna is divided into 4 quadrants, each 16 x 32 m. Each quadrant includes transmit/receive (T/R) modules distributed over the upper side of the antenna. The quadrant is stiffened and held flat by trusses above the T/R modules. Additional structural members interconnect the quadrants in the operational configuration and connect them to the central body of the spacecraft. In operation, the long (64-m) axis of the antenna is parallel to the orbital velocity vector.

The radar system incorporates power processing specific to the radar. Capacitance is included which permits the peak transmitted power to exceed the 300 kW average power provided by the SRPS.

Small (less than 1 m diameter) directional antennas are provided for communications. Communications may be relayed through a suitable satellite. Navigation is via the Global Positioning System. The attitude control system is described below.

SPACE REACTOR POWER SYSTEM CONCEPT

Concepts of the SRPS, as of the time of this study, are described in Ref. 3. Briefly, the SRPS uses as its energy source a fast-spectrum reactor fueled with enriched uranium nitride and cooled with liquid lithium. A shield shadows the rest of the spacecraft from nuclear radiation and an extendable boom keeps the rest of the spacecraft away from the reactor. The lithium coolant is moved by electromagnetic pumps to a heat exchanger where it heats one end of a set of thermoelectric elements made of silicon-germanium, doped with gallium phosphide. Waste heat from the colder end of the thermoelectric elements is removed by heat pipes and radiated to space. Electrical power from the thermoelectric elements is conditioned and delivered to the rest of the spacecraft as regulated constant voltage dc. A secondary bus provides power for emergency or special loads and for use prior to start-up of the main power system.

The reactor operates at constant power and temperature; load changes are accommodated by dumping unneeded power through shunt resistors. This provides load following on a fairly rapid time scale (zero to full load in 10-100 ms). Faster load transients are handled by the capacitors in the radar system.

A candidate concept of a 300-kWe SRPS is shown in F 1. The length of this SRPS is 25 m and its overall diameter 20 m. The various elements lie essentially in a plane. The reactor is surrounded by the cylindrical shadow shield. Extending radially from the shield are the radiator panels. The primary heat transport system takes the heat from the reactor and conveys it to thermoelectric power conversion modules situated along the radiator panels. The electricity produced is carried by cables along the boom to a control and power conditioning module. Here it is regulated and unneeded power is dumped. This module also provides the interface to the rest of the spacecraft: commands to the power system and telemetry from the system are transmitted via this interface.

When folded for launch, the SRPS fits in the Shuttle orbiter payload bay or in the fairing of the Titan 4. The candidate version occupys about 9 m of bay length (Fig. 2). The boom is deployed after the system is placed in orbit. The main radiator is deployed as part of the start-up sequence, after the lithium coolant, solid during launch, has been melted.

Other SRPS configurations have been under consideration (Ref. 3). They differ primarily in the geometry of the radiators and of associated primary heat transport and power conversion equipment, and in the geometry of the shield. The SP-100 design continues to evolve and differs from that described here.

The boom length and shield can be chosen to control the radiation dose delivered to the rest of the spacecraft by the reactor. The SRPS is designed to limit this dose to 10^5 rad of gamma radiation (at the antenna) and 10^{13} neutrons/cm^2, integrated over the 5-year life of the spacecraft.

The SRPS main radiators operate at 850-900 K. The thermal radiation delivered to the rest of the spacecraft is not to exceed 1 sun (1.4 kW/m^2).

The SRPS is designed to operate with minimal attention from the ground or the rest of the spacecraft. The start-up sequence, from initiation to full power, takes less than 24 hours. Once up to full power, the SRPS will operate without commands for at least 6 months; a command then is needed only to inform the SRPS that continued operation is desired. If communications are lost for more than a preset interval, the control system will shut down the reactor. Two independent shutdown means are provided.

The SRPS will withstand the natural environment around the Earth for 10 years and still deliver rated power. This includes withstanding ionizing particles in the Van Allen belts, meteoroids, and debris at all altitudes. Survivability against hostile threats has also been considered.

SPACECRAFT CONFIGURATION

Operational Configuration

Two principal operational configurations for the radar spacecraft were evaluated. Both have as major elements the SRPS; the mission module, containing the communications, command, and attitude control electronics; the radar central power conditioning; the signal processing module; and the radar antenna, with its supporting and connecting structure. In one configuration (Fig. 3a) the SRPS boom axis is vertical; in the other (Fig. 3b) it is horizontal.

The horizontal boom configuration has advantages in regard to exposure of the radar antenna and the electronics modules to radiation from the SRPS. Since the radar antenna is almost edge-on to the reactor, it provides some self-shielding and also partially shields the mission module and and signal processing module from reactor radiation. The antenna and the main SRPS radiator are almost edge-on to each other, so heat transfer from radiator to antenna is minimized.

The horizontal boom configuration has, however, difficulties with edge-reflection of the radar beam. Much of the spacecraft is outside the radar antenna rectangle. Moreover, to keep these portions of the spacecraft at least 1 meter above the lower face of the antenna, they must be offset from the antenna plane. This means that the c.g. of the antenna, which is the most massive subsystem, will not lie along the boom axis. The resulting mass assymetry is undesireable from the standpoint of spacecraft dynamics and attitude control.

The edge-reflection and mass assymetry problems were considered important and led to selection of the vertical boom configuration, Fig. 4, for this study.

Propulsion Configuration

Either chemical or electric propulsion may be used to bring the spacecraft from its Shuttle (or Titan 4) launch vehicle to operational orbit. Chemical propulsion would be used with the spacecraft assembled but not deployed. It is best located along the spacecraft axis, at the end opposite the reactor (Fig. 5a). This places the thrust vector through the center of mass, keeps propulsion exhaust away from the spacecraft, and requires no additional shielding from nuclear radiation.

Electric propulsion would be used with the spacecraft deployed. Various locations of the electric propulsion system were considered (Ref. 1). The selected location uses a single propulsion module at center of radar antenna, on the front face (Fig. 5b). Thrust exhausts away from the antenna front face. No spacecraft elements are within 90 deg of the exhaust direction, so contamination by the exhaust is minimized. To avoid degradation of the antenna pattern, the propulsion module is jettisoned prior to radar operation.

Stowed Configuration

The spacecraft is to be launched either by the Space Transportation System (STS) or the Titan 4, and must fit within the cargo mass limits of these vehicles for the inclination and altitude of the orbit to which it will be launched. The antenna alone, with its associated structure and structural interconnections, has a mass of about 42,000 kg; multiple launches and assembly in orbit are needed.

For transport by the Shuttle or Titan 4, the spacecraft, excluding propulsion, is divided into 5 packages. The 32 x 64 m antenna is designed as an assembly of four 16 x 32 m quadrants, placed edge-to-edge. Each quadrant folds into a package 1.8 x 2 x 16 m for stowage. The quadrant, with its support and interconnect structure, is placed in the Shuttle bay or Titan 4 fairing for launch. Each quadrant self-deploys in orbit, on command. Fig. 6 shows a folded quadrant stowed in the Shuttle.

The fifth launch package includes the remaining elements of the radar spacecraft, less propulsion: the SRPS, radar central power conditioning, the mission module (communications, command, attitude control electronics, etc.), and signal processing. These elements stow within one Shuttle bay (Fig. 6) or one Titan 4 fairing and require one additional launch.

Because of the Shuttle/Titan 4 cargo mass limitations the propulsion system cannot be launched with the rest of the spacecraft but must be assembled with it in orbit.

Mass Breakdown

Table 1 gives a mass breakdown for the spacecraft. The Space Reactor Power System contributes 8,300 kg. The radar system and associated structure contributes 42,800 kg and remaining items 250 kg, for a total, without propulsion, of 51,300 kg. This is a very large and massive spacecraft!

The SRPS mass is larger than that mentioned in Reference 3 because a large, heavy, shield is needed to protect the very large antenna from reactor radiation. Also, more recent work suggests that it may not be possible to keep the SRPS mass down to the 8,300 kg mentioned.

ORBIT, LAUNCH VEHICLE, AND PROPULSION

Operational Orbit

The required operational orbit was specified as "approximately 1100 km" altitude circular at 61 deg inclination. Earlier analysis showed that

significant excursions in altitude will occur, due to harmonics in the Earth s gravitational field, and that an orbit at mean altitude 1088 km and eccentricity about 0.001 reduces the excursions without the need for orbit circularization maneuvers. This orbit was selected.

Launch Vehicle

At the beginning of this study, only launch by the Space Transportation System (STS) was considered; in almost all of the study STS launch was assumed. After the Challenger accident it became apparent that launch by an expendible launch vehicle should be considered as an alternative. The Titan 4 was chosen because of its close match to STS capabilities. The mission profiles prepared for the Shuttle launch need little modification for use with the Titan 4. Launch vehicle integration and arrangements for orbital assembly will be significantly different, however.

Assumed cargo mass capabilities were based on information about the STS available prior to the Challenger accident, using 104% of nominal Orbiter main engine thrust. These capabilities may be significantly reduced because of changes to increase STS safety; this development was not considered. Also, the effect of differences between Titan 4 and STS capabilities has not been examined.

Structural support of the SRPS in the Shuttle bay is described in Reference 3. Standard Shuttle Orbiter provisions for cargo power, telemetry, and temperature control should be adequate. If an electric propulsion module is flown, the propellant (ammonia or xenon) will have to be vented or refrigerated while in the Shuttle.

Propulsion from Launch Vehicle Orbit to Operational Orbit

Two propulsion methods were considered for transfer of the spacecraft from the launch vehicle orbit to operational orbit: chemical and electrical propulsion. For chemical propulsion, an upper stage using hydrogen-oxygen propellant, with an I_{sp} of 444 lbf-s/lbm (4360 N-s/kg), was assumed. The propellant mass required, derived below, turned out to be 9600 kg or more, corresponding to a Centaur G class stage. The NASA decision not to fly Centaur from the Shuttle came when this study was essentially complete, and is not reflected in this paper. For electrical propulsion, the alternatives considered were ammonia arcjets, with I_{sp} of 1000 lbf-s/lbm (9810 N-s/kg), and xenon ion thrusters, with I_{sp} of 3000 to 4700 lbf-s/lbm (29,400 to 46,100 N-s/kg).

Launch Azimuth and Assembly Orbit

The maximum orbital inclination for launch azimuths allowable from Kennedy is 57 deg; the minimum from Vandenberg is 70 deg. Neither reaches the 61 deg selected for the space-based radar, but the Kennedy launch to 57 deg is closer and would permit higher cargo mass. Launch from Kennedy was therefore selected. Two inclinations for the launch vehicle orbit were examined: 57 deg, which minimizes the orbital plane change required, and 28.5 deg, which maximizes the mass that can be brought to launch vehicle orbit.

Because performance of the chemical upper stage or electric propulsion is better than that of the STS or Titan 4, the launch vehicle should not be flown higher than necessary; its cargo capability falls rapidly with increasing altitude. However, the assembly orbit must have an altitude of at least 400 km because of orbital decay, as discussed below. It was assumed that the launch vehicle must bring the spacecraft elements, and the additional propulsion needed, to the assembly orbit.

Three assembly orbits were considered:

a) 420-450 km altitude, 28.5 deg inclination, circular
b) 420-450 km altitude, 57 deg inclination, circular
c) 500 km altitude, 28.5 deg inclination, circular (Space Station)

Propulsion Trajectory and Propellant Mass

For each assembly orbit, three propulsion modes were considered.

1) Chemical, to the operational orbit
2) Electrical, to the operational orbit
3) Chemical to an intermediate circular orbit at 925 km and the initial inclination, then electrical to the operational orbit.

Results are summarized in Table 2. Note that an initial orbit at 28.5 deg inclination requires excessive propulsion mass if chemical propulsion is used: 95,000 kg, or at least 5 Shuttle launches for the propulsion alone. If electric or 2-stage (chemical/electric) propulsion is used, the time for transit to the operational orbit is excessive: 1 to 2 years. An initial orbit at 57 deg inclination is, therefore, strongly preferred. If an initial orbit at 28.5 deg inclination 500 km altitude is nevertheless required to permit assembly at Space Station, ion propulsion appears mandatory to obtain a reasonable propulsion system mass and reasonable number of Shuttle launches to bring up the propulsion system.

For a 57 deg assembly orbit, chemical propulsion is much faster than electric (0.5 day vs. 25 to 72 days). The chemical propulsion system is heavier than the electrical but either can be brought up with a single Shuttle launch. Two-stage propulsion (chemical followed by electric) appears to have no advantage over the simpler one-stage chemical propulsion. The electric propulsion system using ammonia arcjets is about 6,000 kg heavier than those using xenon ion thrusters; transit time is 25 days with the arcjets vs. 53-56 days with ion thrusters. Starting from 420 km rather than 450 km altitude has negligible effect on the transit time and propulsion system mass; the same is expected to be true for 400 km.

MISSION PROFILES

Various methods of placing the spacecraft in its operational orbit were considered. Preferred is a series of six Shuttle launches from Cape Kennedy, which place, in an assembly orbit at 57 deg inclination, about 400 km altitude, four quadrants of the radar antenna, the remainder of the spacecraft, and a Centaur G class upper stage. The elements brought up in each Shuttle flight are left (parked) in the assembly orbit. Each successive flight recovers the parked package and, using the Shuttle Remote Manipulator System (RMS) and Extra-Vehicular Activity (EVA), assembles it to the element just brought up and releases it to await the next flight. After the last Shuttle flight the upper stage brings the spacecraft to operational orbit where its boom, main radiator, and radar antenna are deployed.

An alternative mission profile uses an electric propulsion module in place of the chemical upper stage. This module has ammonia propellant and arcjet thrusters. The boom and antenna are deployed in the assembly orbit, permitting considerable checkout before the Shuttle leaves. The power system is then started and provides power for propulsion to the operational orbit. Policy on starting the reactor at altitudes as low as 400-500 km has not yet been established.

If Titan 4's are used for launch in place of Shuttles, one or more Shuttle flights could be added for assembly of the elements parked in orbit by the Titans.

After the radar mission has been completed, the reactor is turned off by ground command, backed up by an on-board clock.

STORAGE IN ASSEMBLY ORBIT

Temperature Control

The multiple Shuttle launches will take many months. During this time the spacecraft elements will be parked in orbit. Calculation was performed to determine if their temperature could be held within acceptable limits, using only passive temperature control and no attitude control, and considering the possible variations in attitude and in sun/shade cycle. It was assumed that the element spins with a period short compared to the orbital period, as a result of tip-off torques. Results show that, using multilayer insulation having an external layer with a proper absorptance/emittance ratio, the temperature can be held within limits of -25 to +25 C. This should be satisfactory for storage of electronics and other components.

The chemical upper stage or electric propulsion module is brought up on the last Shuttle, so need not be stored in orbit.

Orbital Decay

It is desireable to use a relatively low orbit for assembly because the mass capabilities of the STS and Titan 4 fall off rapidly with altitude. However, the spacecraft elements must remain in orbit long enough to complete the assembly. One year was chosen as a conservative estimate for the whole process. The orbital lifetime of each package should therefore be at least one year. This might perhaps be relaxed to six months for the elements brought up in the last few launches.

Table 3 shows the orbital lifetime calculated for various spacecraft assemblies and attitudes. Aerodynamic drag provides the predominant external torque at assembly altitudes. The spacecraft assemblies are roughly rod-shaped or cylindrical and will tend to orient with their long axes parallel to the orbital velocity vector, though oscillating around this direction. The drag area was taken, conservatively, as the average, weighted 2:1, of the area at 6 deg angle of attack and at 90 deg. The complete spacecraft assembly, undeployed and without propulsion, has the shortest life: 1 year starting at 400 km, 2 years starting at 440 km, 5 years starting at 500 km. An initial altitude of about 400 km appears adequate. Some loss in altitude will occur during orbital stays between Shuttle flights, but it should be possible to accommodate this by bringing the packages slightly higher than nominal assembly altitude and allowing for the loss.

DYNAMICS AND ATTITUDE CONTROL

Attitude is sensed by an inertial gyro unit. It is controlled by control moment gyros, which are unloaded by interaction of magnetic torquers or current loops with the Earth's magnetic field. (Large amounts of power would be available for magnetic torquing and large current loops could be provided.) Sun and star or sun and horizon sensors are provided for calibration of the inertial gyro units and a magnetometer is carried to measure the local magnetic field when unloading is needed. The vertical orientation with the antenna downward is unstable with respect to the gravity gradient, but the

control moment gyros provide adequate torque (6,500 N-m) to maintain or restore the desired attitude. If the SRPS boom is lengthened to provide 40 m separation between the reactor and mission module, instead of the 25 m shown in Fig. 4, the desired orientation will be stable. Trade-offs associated with this change have not been examined.

The spacecraft requirements limit the lowest natural structural frequency to 0.01 Hz. The lowest frequency associated with the SRPS alone is of the order of 1 Hz (Ref. 3). The effect of structural frequencies as low as 0.01 Hz upon the attitude control has been examined only in a cursory way. Many minutes will be required for a 1 radian rotation of the spacecraft. The mission and spacecraft requirements do not call for rapid turns.

NUCLEAR AND THERMAL RADIATION

Nuclear

The SRPS specification written before this study allowed 5×10^8 rad of gamma radiation from the power system to reach the user plane in 7 years of reactor operation at full power. The user plane was defined as a circle 4.3 m in diameter, centered on the boom axis, at the interface between the SRPS and the mission module. The requirements for the radar spacecraft, however, limited the dosage to only 1×10^8 rad in 5 years over the entire antenna. This meant that the shield described in Ref. 3 had to be thickened and extended radially, adding significant mass.

Thermal

Selected SRPS functional requirements limit the thermal radiation delivered to the rest of the spacecraft by the SRPS to 1 sun (1.4 kw/m^2). Analysis (Ref. 1) showed that the amount delivered depends strongly on the configuration of the SRPS main radiator. The configurations recommended in Reference 3 comply with the specification, when integrated with the rest of the spacecraft as shown in Fig. 4.

The radar antenna is not at the user plane; it is 7 m further from the radiators. This reduces the thermal radiation from the radiators to the back of the antenna to about 0.6 sun. However, radiation from the SRPS radiators is only part of the thermal radiation received by the radar antenna. Sunlight can contribute another "sun", and radiation from the Earth can deliver 0.3 sun to the face of the antenna. Whether the additional heat generated by the Transmit/Receive modules and other elements on the antenna can be radiated to space and the elements kept adequately cool will be an important question for the radar designer. If not, the limit on radiant heat delivered by the SRPS may have to be tightened.

ISSUES AND IMPLICATIONS

Some of the findings concerning the nuclear power system are:

1) Extended orbital storage of the power system will be needed for missions involving multiple launches and orbital assembly. It appears that this will be possible without attitude control, using only passive temperature control.

2) The thickness and area of the shield will have to be tailored to the spacecraft on which the power system is used and the duration of the mission.

3) The currently specified limit on thermal radiation from the power system to the rest of the spacecraft may be difficult to meet with some

radiator configurations, and may be important in selection and design of the radiators. Also, the current limit may be too high for some spacecraft.

Some findings relevant to the space-based radar mission are:

1) Because of the large mass and size of the radar antenna, multiple Shuttle or Titan 4 launches are needed to put the spacecraft into orbit.

2) Extensive orbital assembly will be required. Shuttle-based techniques for such assembly will have to be defined and developed.

3) Assembly at Space Station appears undesireable because of the large difference in inclination between the Space Station orbit and the spacecraft operational orbit, requiring a very large orbital velocity increment for transfer between these orbits.

4) Extended orbital storage will be needed during orbital assembly. Temperature control solutions are needed for each of the spacecraft elements parked in orbit during the assembly sequence.

5) Because of the low structural frequencies expected, rapid changes in spacecraft attitude will probably not be possible.

6) It is not clear whether electronic components on the radar antenna can be kept within permissible temperature limits when the antenna is receiving the currently allowable 1 sun from the power system, plus thermal radiation from the sun and Earth.

7) Launch of the radar antenna selected for this study will be very costly and will require a major commitment of launch resources. There is much incentive to reduce the antenna mass and to find mission profiles with fewer launches.

CONCLUSIONS

Examination of nuclear reactor power for a 300 kW space-based radar indicates that such a mission should be feasible, using the technology currently being developed by the SP-100 space nuclear reactor power project. The radar would be capable of quickly detecting targets with low radar cross-sections. Continuous power generation by the reactor source would obviate the need for energy storage and allow continuous operation of the radar for coverage of multiple areas of interest.

The radar system studied uses a very large and heavy antenna and, with present launch vehicles, would require multiple launches and orbital assembly. Development of the large space-based radar and availability of launch resources may be pacing items. Since the SP-100 program covers technology for space reactor power systems ranging from 10 kW or less up to 1000 kW, the power system could be selected to match developments in space radar power levels and launch vehicle resources.

A number of technical issues concerning both the the nuclear power system and the radar mission have been identified and are discussed in the text.

ACKNOWLEDGEMENT

William Gray, John Winslow, and John Spanos of JPL and Joan Boudreau of Los Alamos contributed significantly to work described in this report. Gerry Tsandoulas and Darryl Weidler of Lincoln Laboratory, M.I.T., and Orlando Jordan of JPL were most helpful in discussions of radar aspects. This work was sponsored by the U.S. Department of Defense, the U.S. Department of Energy, and the National Aeronautics and Space Administration.

REFERENCES

1) Jaffe, L. D., et al, "Nuclear Reactor Power for a Space-Based Radar", Jet Propulsion Laboratory, Pasadena, CA, Publ. 86-47, August 1986.
2) Jaffe, L. D., et al, "Nuclear Reactor Power for a Reusable Orbital Transfer Vehicle," preprint 87-1102, 19th International Electric Propulsion Conference, AIAA, May 1987. Accepted for publication, Jnl. of Spacecraft and Rockets.
3) Jaffe, L. D., et al, "Systems Aspects of a Space Nuclear Reactor Power System". Proc. 23rd IECEC, vol. 3, pp. 255-261, 1988.

Table 1 Spacecraft Mass Breakdown (in kg)

SPACE REACTOR POWER SYSTEM		
Reactor		1650
Shield		1580
Heat transport		1450
Power conversion		775
Heat rejection		1440
System control, power conditioning, and distribution		950
Structure		420
SRPS total		8265
MISSION MODULE		
Communications, command, attitude control		250
Mission module total		250
RADAR		
Radar central power conditioning		250
Signal processing		272
Antenna		
4 antenna quadrants (8818 kg each)	35272	
Antenna structure	6300	
Structural interconnects	700	
Antenna total		42272
Radar total		42794
SPACECRAFT TOTAL= (without propulsion system)		51309
ELECTRICAL PROPULSION SYSTEM (if used)		
Electric propulsion unit		4057
Propellant (NH_3)		5820
Tank		1861
Electric propulsion total		11738
SPACECRAFT TOTAL= (with electric propulsion system)		63047

Table 2 Time and Propulsion Mass for Transit from Assembly Orbit to Operational Orbit*

PROPULSION	CHEMICAL PROPELLANT	CHEMICAL I_{sp} lbf-s/lbm	ELECTRICAL PROPELLANT	ELECTRICAL I_{sp} lbf-s/lbm	TRANSIT TIME, DAYS	PROPELLANT MASS, Mg	PROPULSION SYSTEM MASS, TOTAL, Mg	SHUTTLE LAUNCHES FOR PROPULSION SYSTEM
Starting Orbit: 450 km 28.5 deg.								
Chemical	H_2/O_2	444	----	----	0.5	92	95	5.0
Electric, arc	-----	----	NH_3	1000	350	80	111	5.9
Electric, ion	-----	----	Xe	3000	440	15	22	1.1
Electric, ion	-----	----	Xe	3684	459	12	18	0.9
Electric, ion	-----	----	Xe	4710	570	9	14	0.8
2-Stage	H_2/O_2	444	NH_3	1000	340	88	121	6.4
2-Stage	H_2/O_2	444	Xe	3000	430	20	29	1.5
2-Stage	H_2/O_2	444	Xe	3684	440	16	25	1.3
2-Stage	H_2/O_2	444	Xe	4710	550	13	22	1.1
Starting Orbit: 450 km 57 deg.**								
Chemical	H_2/O_2	444	----	----	0.5	8.9	12	1.0
Electric, arc	-----	----	NH_3	1000	25	5.8	12	0.9
Same, 420 km	-----	----	NH_3	1000	25	5.8	12	0.8
Electric, ion	-----	----	Xe	3000	53	1.8	6.4	0.5
Same, 420 km	-----	----	Xe	3000	54	1.8	6.5	0.4
Electric, ion	-----	----	Xe	3684	56	1.5	5.8	0.5
Same, 420 km	-----	----	Xe	3684	56	1.5	5.8	0.4
Electric, ion	-----	----	Xe	4710	71	1.1	5.2	0.4
Same, 420 km	-----	----	Xe	4710	72	1.2	5.2	0.4
2-Stage	H_2/O_2	444	NH_3	1000	23	9.4	18	1.5
2-Stage	H_2/O_2	444	Xe	3000	49	5.5	13	1.1
2-Stage	H_2/O_2	444	Xe	3684	51	5.2	13	1.0
2-Stage	H_2/O_2	444	Xe	4710	65	4.8	12	1.0
Starting Orbit: 500 km 28.5 deg. (Space Station)								
Chemical	H_2/O_2	444	----	----	0.5	92	95	5.2
Electric, arc	-----	----	NH_3	1000	330	76	102	5.6
Electric, ion	-----	----	Xe	3000	440	15	22	1.2
Electric, ion	-----	----	Xe	3684	450	12	18	1.0
Electric, ion	-----	----	Xe	4710	560	9.0	14	0.8
2-Stage	H_2/O_2	444	NH_3	1000	320	82	111	6.1
2-Stage	H_2/O_2	444	Xe	3000	430	19	29	1.6
2-Stage	H_2/O_2	444	Xe	3684	440	16	25	1.4
2-Stage	H_2/O_2	444	Xe	4710	550	13	21	1.2

* Mass transferred, excluding propulsion: 55,000 kg.
Prime power for electric propulsion: 300 kW
Staging orbit for 2-Stage cases: 925 km circular, inclination same as starting orbit

** Except as noted

12

Table 3 Altitude of Circular Orbit for 1-year Orbital Lifetime

	Projected Area, m^2	Required Altitude for 1 year life, km	Altitude after 0.5 year, km
1 antenna quad with structure	19	410	370
2 antenna quads with structure	28	390	350
Assembled spacecraft, not deployed	84	400	360

Note: Area projected normal to velocity vector.

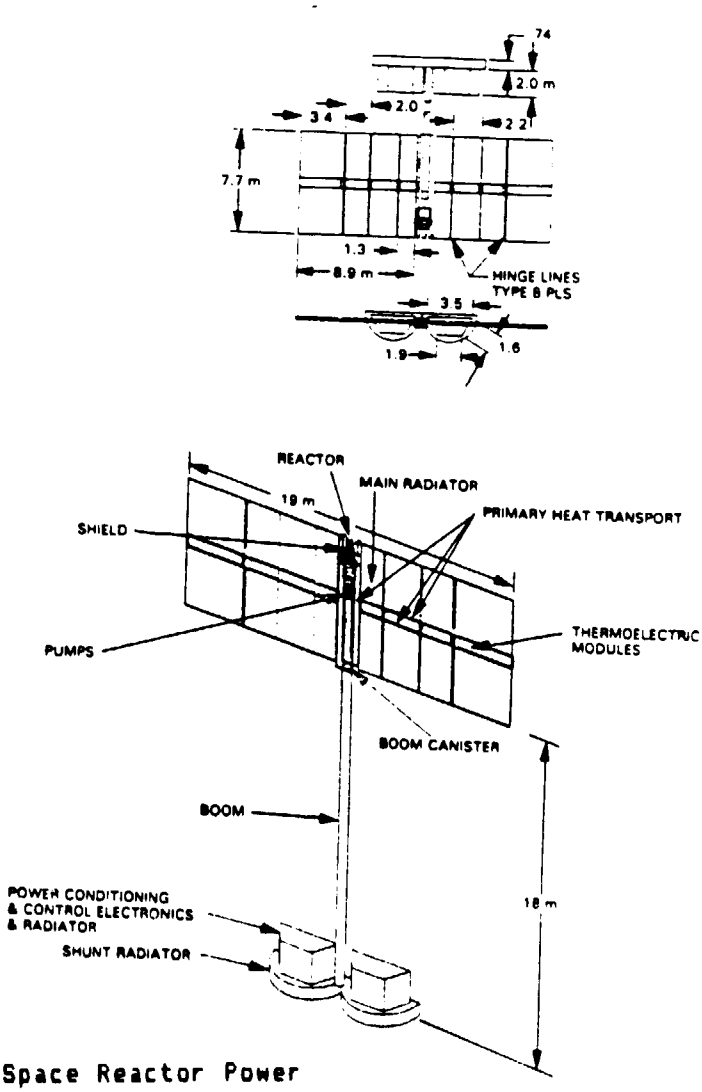

1. Candidate 300-kwe Space Reactor Power System. Operational configuration.

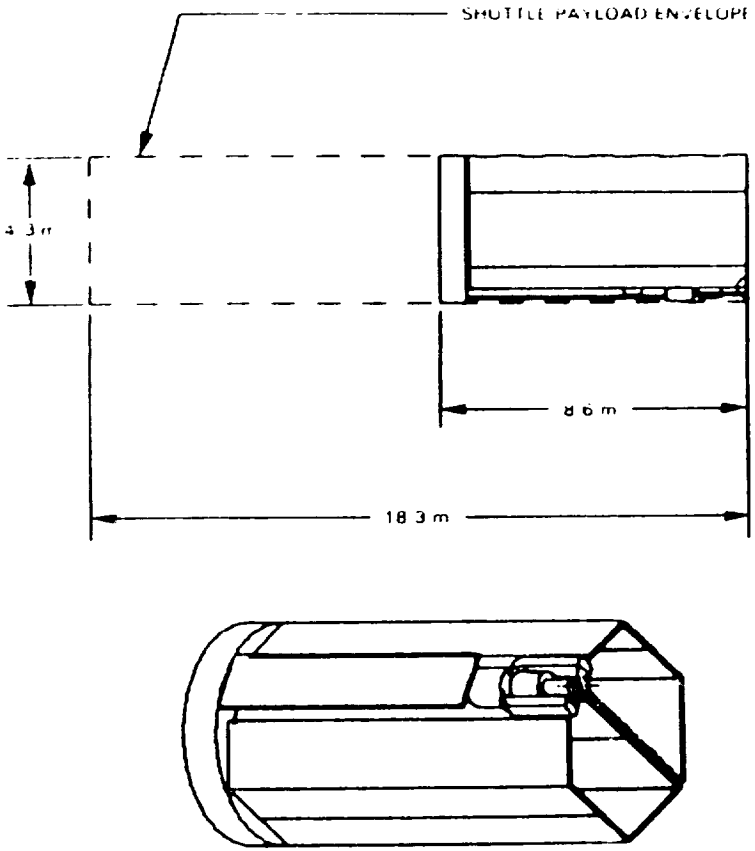

2. Candidate 300-kwe Space Reactor Power System. Stowed for launch.

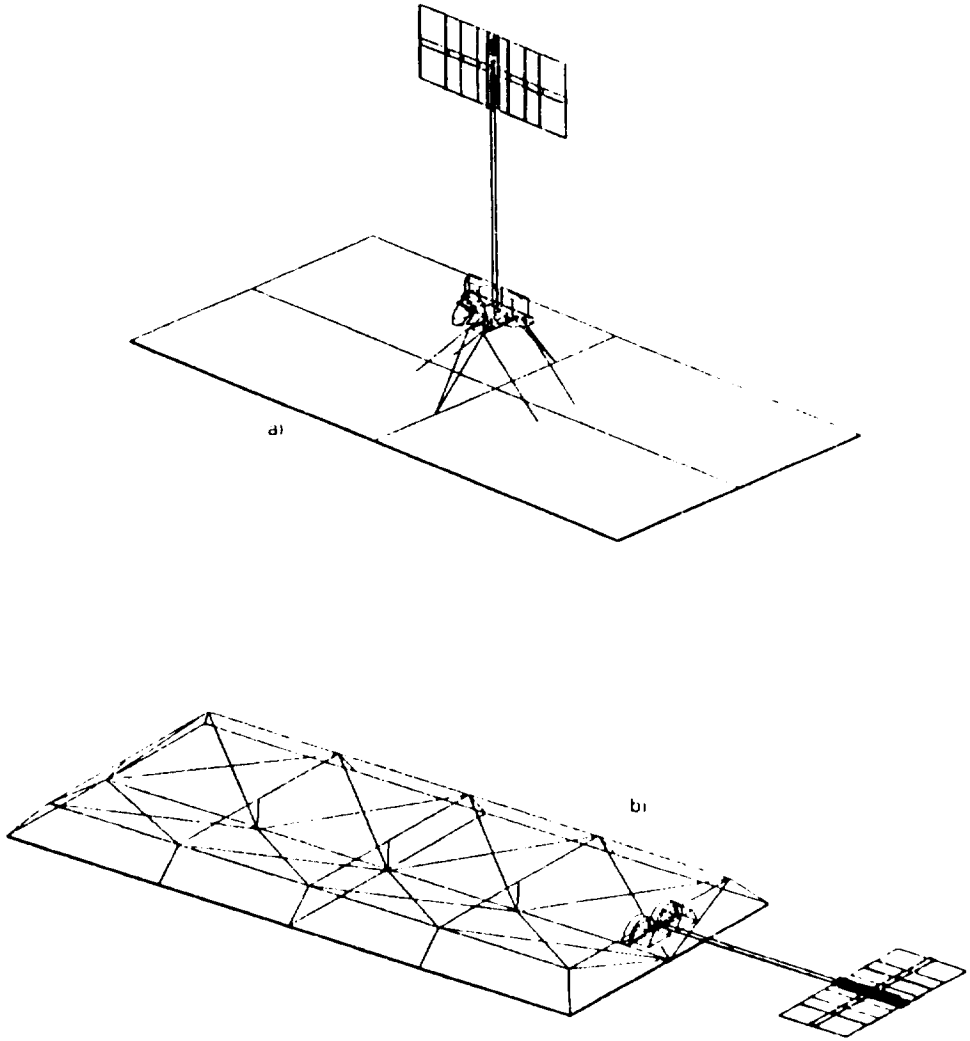

3. Candidate spacecraft operational configurations.
   (a) Boom axis vertical.
   (b) Boom axis horizontal.

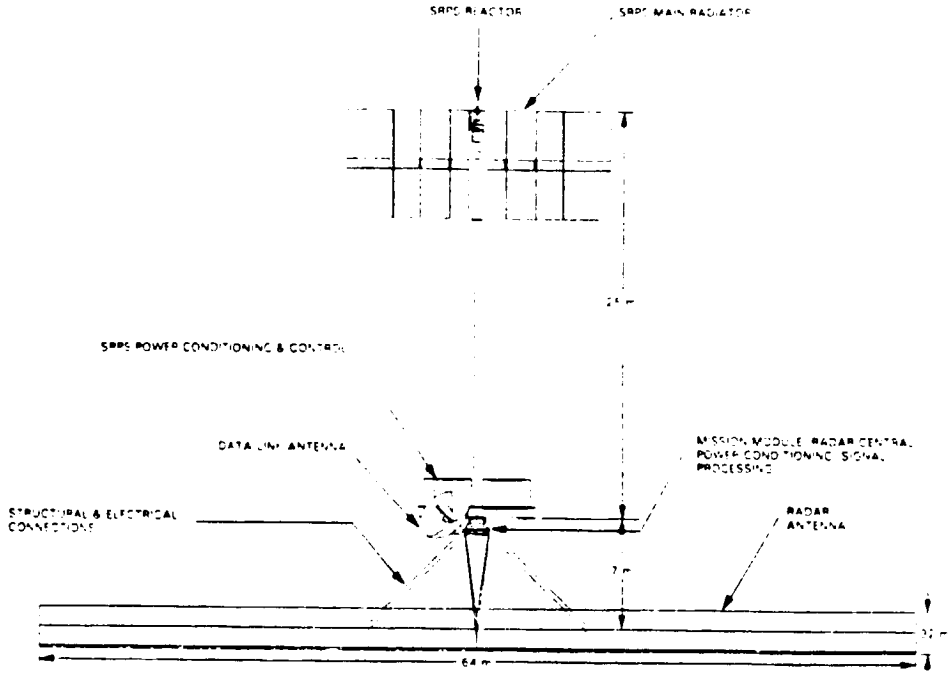

4. Selected spacecraft operational configuration.

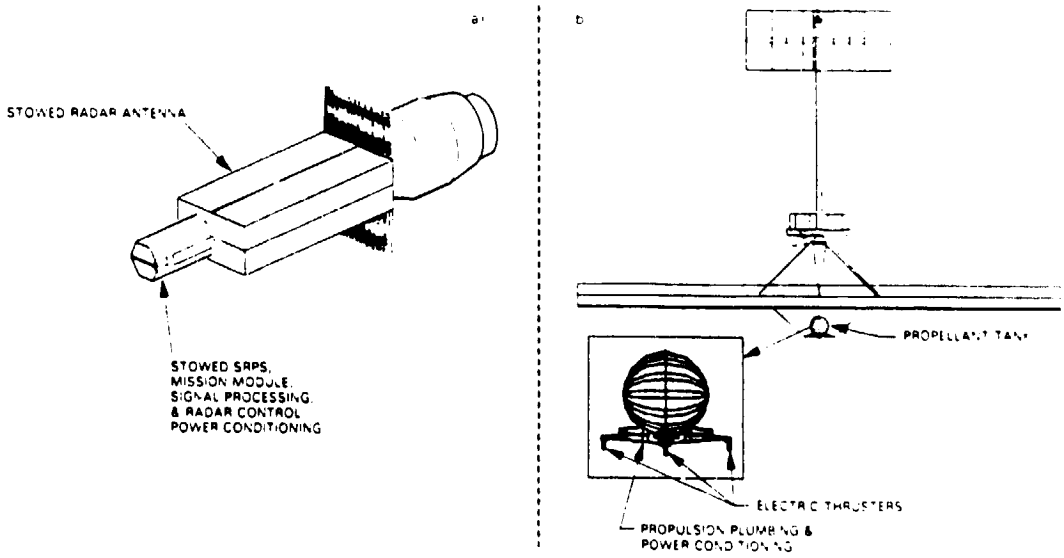

5. Spacecraft configuration during propulsion from assembly orbit to operational orbit.
   (a) With chemical propulsion.
   (b) With electrical propulsion.

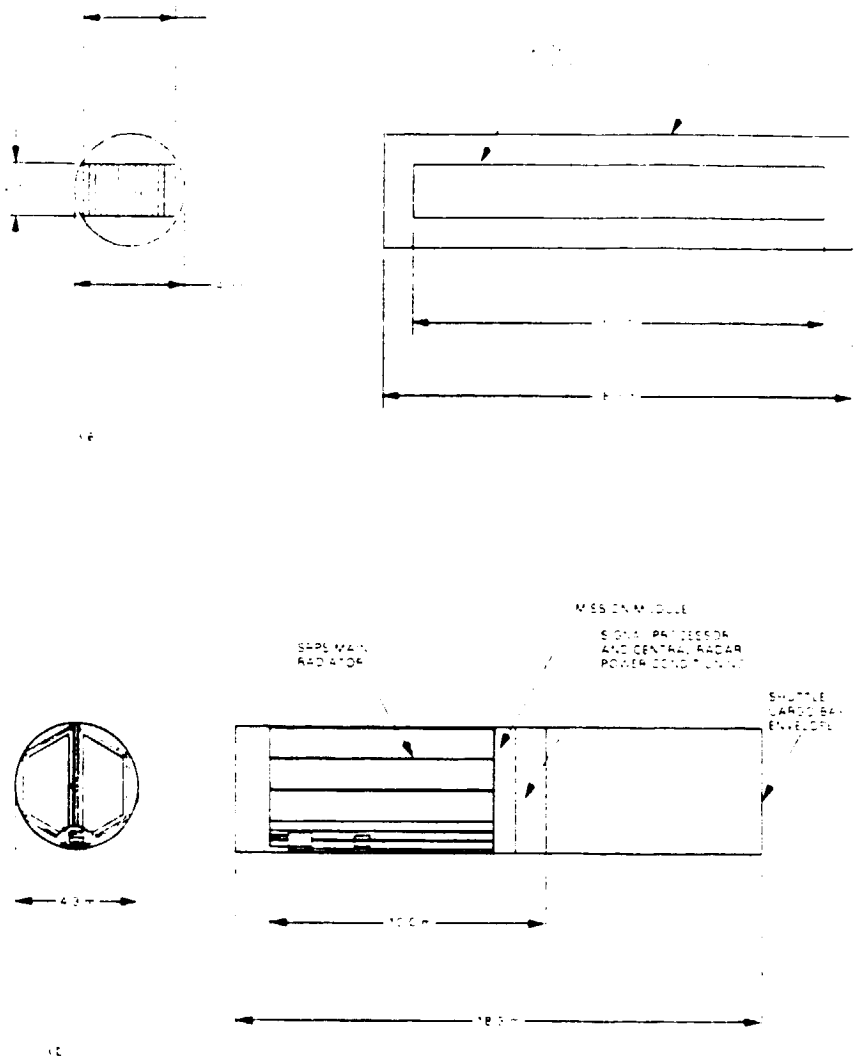

6. Stowed configuration in Shuttle cargo bay.
   (a) Radar antenna quadrant.
   (b) Mission module, signal processing module, and space reactor power system.