NASA

National Aeronautics and
Space Administration

Washington, D.C.
20546

PAT. APPL
IN-76

326337

Reply to Attn of:

NASA Case No. MFS-26061-1

Print Figure 1

NOTICE

The invention disclosed in this document resulted from research in aeronautical and space activities performed under programs of the National Aeronautics and Space Administration. The invention is owned by NASA and is, therefore, available for licensing in accordance with the NASA Patent Licensing Regulation (14 Code of Federal Regulation 1245.2).

To storage commercial utilization of NASA-owned inventions, it is NASA policy to grant licenses to commercial concerns. Although NASA encourage nonexclusive licensing to promote competition and achieve the widest possible utilization, NASA will consider the granting of a limited exclusive license, pursuant to the NASA Patent Licensing Regulations, when such a license will provide the necessary incentive to the licensee to achieve early practical application of the invention.

Address inquires and all applications for license for this invention to George C Marshall Space Flight Center
Code CC01
Marshall Space Flight Center, AL 35812

Approved NASA forms for application for nonexclusive or exclusive license are available from the above address.

(NASA-CASE-MFS-26061-1) HANGING DROP CRYSTAL GROWTH APPARATUS Patent Application (NASA) 18 p

N91-16815

CSCL 20L

Unclas
G3/76 0326337

NASA Case No. MFS-26061-1

HANGING DROP CRYSTAL GROWTH APPARATUS

Technical Abstract

This invention relates generally to control systems for controlling crystal growth, and more particularly to such a system which uses a beam of light refracted by the fluid in which crystals are growing to detect concentration of solutes in the liquid.

In a hanging drop apparatus 10, a laser beam 22 is directed onto drop 16 which refracts the laser light into primary and secondary "bows" 31 and 33, respectively, which in turn fall upon linear diode detector arrays 24. As concentration of solutes in drop 16 increases due to solvent removal, these "bows" move farther apart on the arrays, with the relative separation being detected by arrays 24 and used by a computer 28 to adjust solvent vapor transport from the drop. A forward scattering detector 46 is used to detect crystal nucleation in drop 16, and a humidity detector 36 is used, in one embodiment, to detector relative humidity in the enclosure wherein drop 16 is suspended.

The novelty of this invention lies in utilizing angular variance of light refracted from drop 16 to infer, by a computer algorithm, concentration of solutes therein. Additional novelty is believed to lie in using a forward scattering detector 46 to detect nucleating crystallites in drop 16.

INVENTOR: *Robert J. Naumann, William K. Witherow and Daniel C. Carter
**Charles E. Bugg and Fred L. Suddath

EMPLOYER: *NASA/MSFC
**University of Alabama in Birmingham

Filing Date: 31 August 1990

Serial No.: 07/575,708

NASA Case No. MFS-26061-1 PATENT APPL.

HANGING DROP CRYSTAL GROWTH APPARATUS

Origin of the Invention

The invention described herein was made by an employee of the United States Government and may be manufactured and used by or for the Government for Government purposes without the payment of any royalties thereon or therefor.

Technical Field

This invention relates generally to controlling crystal growth and more particularly to a hanging drop crystal growth apparatus provided with means to detect refractive index of fluid making up the drop within which crystals are grown and using this data to control environmental parameters of the drop for providing optimum growth conditions for crystals growing therein.

Background of the Invention

The growth of high-quality protein crystals to sizes of 0.5 mm or larger is an essential step in determining three-dimensional structure of the protein. Since the biological activity of the protein is determined by this structure, there has been a major effort in recent years on the part of molecular biologists to obtain structural information on a large number of enzymes and other proteins in order to obtain an understanding of living organisms at the molecular level. Such an understanding can lead to many practical applications, such as protein engineering to enhance the properties of known enzymes or to derive new enzymes having specific catalytic action, development of new herbicides and insecticides that target specific molecules of plants and insects,

and development of new pharmaceutical agents based on rational drug design. With the present computer technology, cyclotron sources, and high resolution area detectors, the process of obtaining necessary structural information for protein crystals of interest has been vastly improved. At the present time, the limiting step has become, in many instances, the ability to grow suitable crystals.

During the process of growing protein crystals from a solution containing dissolved protein and a small quantity of precipitating agent dissolved in water, the essential parameter to be controlled is the degree of supersaturation of the solution. This is a complicated function of temperature, concentration of protein solute, concentration of precipitating agent, and pH of the solution. The degree of supersaturation determines nucleation rate of new crystallites as well as growth rate of existing crystals. Since a large number of small crystallites represents a significant competition for existing solute, it is desirable to maintain a supersaturation sufficient to suppress secondary crystal nucleation. Additionally, growth rate at various crystalline faces is known to be a function of local supersaturation. Therefore, control of supersaturation can influence the environment of a growing crystal as well as defect formation therein.

In the past, practically all methods used in growing protein crystals of interest involve the use of a precipitating agent that decreases soluability of the protein to be crystallized by tying up excess solvent, which is usually water. The precipitating agent may be added directly to the protein solution (batch method) or separated from the protein solution either physically (vapor diffusion method) or by a semi-permeable membrane (dialysis method). Probably the most well known and widely used method is the "hanging drop" technique wherein a small droplet of

protein solution is suspended over a well of solution having a selected quantity of precipitating agent dissolved therein to produce a vapor pressure lower than that of the droplet. This difference in vapor pressure causes excess solvent in the droplet to evaporate and be transported to the well by diffusion.

These described methods of prior art are generally determined empirically for each system with little theoretical guidance or understanding of the process. This entails a large number of trials, often with little or no success. No attempt is made to monitor or control supersaturation of the protein solution during the growth process other than by selecting the initial conditions. Evolution of supersaturation in the protein droplet is determined not only by the amount of precipitating agent present, but also by the number of crystallites present and their size and growth rate. Since nucleation is a stoichastic process, crystal growth experiments starting with the same initial conditions may produce quite different results.

Accordingly, it is an object of this invention to provide a method and apparatus for growing, monitoring, and controlling protein crystal growth in a controlled environment.

It is another object of the present invention to provide such apparatus with means which ensures that optimum growth conditions are secured for a given protein solution.

It is a further object of the present invention to provide such apparatus with a monitoring system for monitoring the growth of the protein crystals.

It is yet another object of the present invention to provide such apparatus with a control system which is operative in response to signals from the monitoring system to control the environmental parameters of the growing crystal.

Summary of the Invention

This invention relates to an apparatus and method for growing crystals in a solution containing dissolved crystalline material, and wherein the solution is contained in an enclosure having a refractive index monitor and scattered light detector therein. The monitor and detector produce electrical outputs that are coupled to a computer which generates a control signal to operate a vapor transport control device for controlling rate of vapor transport of solvent from the solution responsive to electrical outputs from the refractive index monitor and scattered light detector.

Brief Description of the Drawings

An understanding of the present invention will be greatly facilitated by reference to the enclosed drawings wherein like figure numerals designate like parts, with:

Fig. 1 being a diagrammatic cut-away side view of an embodiment of a crystal growth cell;

Fig. 2 being a diagrammatic cut-away top view of alternate embodiment of the present invention;

Fig. 3 being a partially diagrammatic block diagram of a portion of a control system of the present invention;

Fig. 4 being a graphic representation of an example of a concentration curve stored in a digital memory of the present invention;

Fig. 5 being a graph showing increasing angular relationship between first and second order rainbow angles in a fluid with increasing refractive index; and

Fig. 6 being a graph of electrically recorded signatures of first and second order peaks of two fluids having slightly different refractive indices.

Description of the Preferred Embodiment

This invention is directed toward a method and apparatus for monitoring and controlling the degree of supersaturation in a hanging drop of protein solution in which protein crystals are to be grown or are growing and includes an automated feedback control system wherein vapor transport of solvent from the drop is varied responsive to monitored supersaturation therein on a real-time basis.

Referring to Fig. 1, a gas-tight enclosure 10 is shown having a tube 12 extending through an upper wall 14, with tube 12 being coupled to a syringe or similar device for dispensing fluid and forming a drop or droplet 16 at end 18 of tube 12. Drop 16 would generally contain a dissolved protein of interest; a precipitating agent, such as polyethylene glycol, salt (NaCl), or ammonium sulfate, at approximately one-half the concentration required to cause crystallization of the protein, and solvent, such as water. In order to control rate of vapor transport to provide optimum growth conditions, it is necessary to know concentration of dissolved crystalline material in drop 16 from a point prior to becoming saturated to a predetermined level of supersaturation. These concentrations can be determined by a technique which involves precisely measuring changes of refractive index of drop 16, which is directly related to density, and thus concentration. This relationship occurs because as solvent is extracted from drop 16, it becomes denser and refracts light an increasingly greater degree. For measuring changes of refractive index in drop 16, a refractometer is employed in enclosure 10 and consists of a coherent light source, such as a laser 20 having a collimated beam 22 (Fig. 2), with beam 22 being directed onto drop 16. For receiving light refracted from drop 16, a plurality of linear photodiode arrays 24 (only one shown in Fig.

1), such as CCD video elements, or simply an array consisting of a row 25 of closely spaced sensitive photodiodes 27 are positioned as shown at angles between 120° and 150° with respect to beam 22.

Light is refracted from drop 16 in accordance with Descartes' theory of the rainbow, which states that water droplets having a refractive index of 1.33 will refract light into a primary rainbow at 136° and a secondary rainbow at 130°. Similarly, as shown in Fig. 2, arrays 24 will receive two bands or peaks of light 31 and 33 corresponding to primary, or first order, and secondary, or second order, rainbows separated by a relatively dark region 35 (dark band of Alexander) and provide, as an analog electrical output on leads 26, a signal representative of refractive index. As density of drop 16 increases, these bands of light become wider apart and produce a signature which is a function of concentration of crystalline material dissolved in drop 16. Figs. 5 and 6 illustrate results obtained from tests of this principle, with Fig. 5 showing the relationship between widening of dark region 35 with increasing refractive index and Fig. 6 showing signatures obtained from two fluids having refractive indices of 1.400 and 1.404. These latter signatures show widening of 0.9 mm between first and second order peaks with a change of only 0.004 in refractive index.

In order to use the detected signature to control crystal growth, outputs from each of arrays 24 are converted to digital format by A-D converters 19 (Fig. 3), averaged in a computer 28 by an averaging circuit 30, and converted to concentration. Outputs from the diode arrays are averaged to prevent reflection from growing crystals from effecting measurements. This averaged value is then compared by comparator 32 with a concentration curve stored in memory 37 and which represents predetermined saturation levels in drop 16.

The result of this comparison data is then utilized by computer 28 to generate a control signal which is applied to vapor transport control 34. Control 34 is connected in open communicating relation to enclosure 10 via tube 41 and opening 43 and controllably removes solvent from drop 16 at a predetermined rate, as will be described.

In instances where it is necessary to detect and control relative humidity in enclosure 10, a humidity detector 36 (Fig. 2), such as a small, fast response unit manufactured by Thunder Scientific, may be mounted therein. This detector is responsive to relative humidity and changes thereof in enclosure 10 and provides, as an output on leads 38, an electrical signal representative of relative humidity. This analog signal is converted to a digital signal by analog-to-digital converter 40 and compared by comparator 42 to a binary signal stored in memory 44 and representative of a predetermined humidity level. An error signal generated by comparator 42 when the two aforementioned signals do not correspond may be used along with inputs from photodiode arrays 24 and forward scattering detector 46 by computer 28 to adjust humidity level in enclosure 10, as will be further explained.

For detecting crystal nucleation in drop 16, a forward light scattering detector 46 is positioned in enclosure 10. As the small crystallites (approximately equal to wave length of light source 20) have a strong forward scattering peak because of diffraction effects, crystal nucleation may be detected by detecting this peak. Detector 46 must be a sensitive device, such as a photomultiplier tube or an array of avalanche photodiodes, which provide an electrical signal on outputs leads 48 representative of increased light due to the aforementioned diffraction. This electrical signal is digitized by

A-D converter 50 to produce a binary signal indicative of onset of crystal nucleation, which signal being provided to computer 28 to be utilized in an appropriate algorithm to modify rate of vapor transport in enclosure 10.

An alternate method for determining protein concentration in the drop includes using a video camera with a "macro" lens (not shown) focused on drop 16 and coupled to conventional electronic image analysis apparatus. These apparatuses use the profile of drop 16 to determine its volume, and thus concentration, of dissolved crystalline material. Similarly, a second camera positioned 90^{o} to the first camera may be used to determine size of growing crystals and their position in the drop.

For controlling concentration of protein in drop 16, vapor transport control means 34 are coupled to enclosure 10 to vary vapor transport of solvent from or to drop 16. This may be accomplished by two methods: first, by varying the state of vapor equilibrium in enclosure 10, driving solvent to or from drop 16, or, secondly, by varying the relative humidity in enclosure 10, exposing drop 16 to reduced humidity therein, causing solvent to evaporate from drop 16 or to increased humidity to slow or stop solvent from evaporating from drop 16.

As one example of the first method, drop 16 is exposed to a flow of fluid in which a precipitating agent is continuously mixed in a selected ratio therewith to establish a fluid flow having a controlled vapor pressure. As is well known, when a solid, non-volatile substance is dissolved in a solvent, vapor pressure of the solution is always lower than vapor pressure of the pure solvent. Thus, if drop 16 is initially provided with 2% precipitating agent and a corresponding vapor pressure, a like precipitating agent may be mixed with the flow of

fluid to form a fluid being from 2% to 6% precipitating agent and generally having a lower vapor pressure than that of drop 16, causing solvent to evaporate from the drop and diffuse into the flowing fluid at a rate determined by the differences in vapor pressure. One such device for varying vapor pressure in a flow of solvent is a gradient maker, as is used in the field of liquid chromatography, and which establishes a vapor pressure gradient between the fluid flow it produces and a second fluid (drop 16). A gradient maker suitable for this purpose may be obtained from Pharmacia-LKB-Biotechnology, Inc., of Piscataway, New Jersey. Alternately, a well or reservoir of precipitating agent may be disposed in enclosure 10 and provided with means for selectively adding additional fluid thereto in order to alter vapor pressure of solution in the well. In the above-described scheme, relative humidity in enclosure 10 remains at a high level, while solvent vapor transport occurs between the flow of fluid and drop 16, with solvent in a vapor phase from drop 16 controllably diffusing toward and into the fluid having the lower vapor pressure. In this manner, concentration of protein in drop 16 may be maintained at a critical supersaturation point, allowing protein molecules time to become aligned into an ordered crystalline lattice of a growing crystal having desired qualities or properties.

The other method for controlling vapor transport in enclosure 10 involves varying relative humidity therein, an example of which is shown in Fig. 2. As shown, this is done by selectively exposing the atmosphere in enclosure 10, and thus drop 16, to a dessicant. The dessicant is disposed in a sealed container 52, which is coupled to enclosure 10 by a valve 54 operated by computer 28. Dessicant in the container absorbs moisture from the atmosphere in

enclosure 10, lowering the relative humidity therein and causing solvent in drop 16 to evaporate at a rate governed by the dessicant's ability to absorb moisture, the surface area of dessicant exposed to atmosphere in enclosure 10, or a combination of both. Other methods of varying relative humidity in enclosure 10 involves introducing small quantities of dry or saturated atmosphere into enclosure 10 or continuously providing a flow of atmosphere having a selected moisture content into enclosure 10. As before, the rate at which the solvent is removed from drop 16 is selected to allow protein molecules time to become aligned into an ordered crystalline lattice.

In operation, and by way of example, it is assumed that hen egg white lysozyme, a protein used to model crystal growth systems, is to be crystallized in a crystal growth cell or enclosure using a gradient maker for vapor transport control as previously described, producing a flow of fluid having a controllable vapor pressure. The vapor pressure gradient established between the flow of fluid and the drop is adjusted by the computer in order to optimize crystal growth conditions in the drop by causing concentration of precipitating agent in the drop to follow the curve of Fig. 4 and stored in memory 32. This curve is calculated to slow the approach of crystalline material in the drop to the critical supersaturation point. In this case, drop 16 would consist of 10 Mg. of a 25 mg/ml lysozyme solution added to 10 Mg. of 4% (w/v) NaCl in 0.1 m sodium acetate buffer, pH 4, at 25^{o} C, with crystallization of the hen egg white lysozyme occurring at a concentration of approximately 3.9% NaCl. Thus, an initial, fairly rapid increase of concentration of NaCl in fluid flowing from the gradient maker draws excess solvent from drop 16, followed by a reduced rate of increase of concentration of NaCl. This

concentration curve, when implemented, initially pulls excess solvent from drop 16 at a relatively high rate until drop 16 is at a concentration of approximately 3.5%, after which the rate of increasing concentration of NaCl is slowed to produce a slow approach to 3.9% NaCl. This gives the fluid from the gradient maker a slowly changing vapor pressure such that when allowed to equilibrate with drop 16, produces a supersaturated condition therein that slowly allows crystals of hen egg white lysozyme to grow. Thus, it is seen that the relative concentration of hen egg white lysozyme in drop 16 is made to follow the concentration curve shown in Fig. 4 and stored in memory 32. As stated, this is accomplished by detecting the refractive index of drop 16 as described with diode arrays 24, averaging their output, converting this output to concentration, and comparing this concentration with the curve stored in memory 32. The resultant signal is fed to computer 28, which in turn generates a control signal that slightly increases or decreases concentration of NaCl in the fluid flow from the gradient maker to adjust concentration of lysozyme in drop 16.

From the foregoing, it is apparent that the applicants have provided a system for real time monitoring of refractive index and thus concentration of dissolved crystalline material in a drop of solvent and using this information in conjunction with a computer to control vapor transport in a crystal growth cell to grow crystals having a degree of perfection and size heretofore impossible to grow.

Abstract of the Disclosure

A protein crystal growth apparatus utilizing a computerized closed loop feedback system to achieve control over the growth process. A drop (16) containing a solvent and dissolved crystalline material is suspended in an enclosure (10), with apparatus for controlling diffusion of solvent vapor to or from the drop coupled thereto. Information relating to concentration of crystalline material in the drop (16) is provided by a refractive index monitor consisting of a source (20) of light refracted by the drop being received by linear photodiode arrays (24). Information relating to onset of crystal nucleation is provided by a forward scattering detector (46). In some instances, relative humidity may be detected by a relative humidity detector (36). Electrical outputs from the photodiode arrays (24), the forward scattering detector (46), and, if used, the relative humidity detector (36) are provided to a computer loaded with a program to appropriately control the level of solvent vapor in the enclosure (10) responsive to detected concentration of crystalline material in drop 10 (refractive index monitor), detected nucleating crystals (forward scattering detector, and detected humidity level (humidity detector) in the enclosure (10).

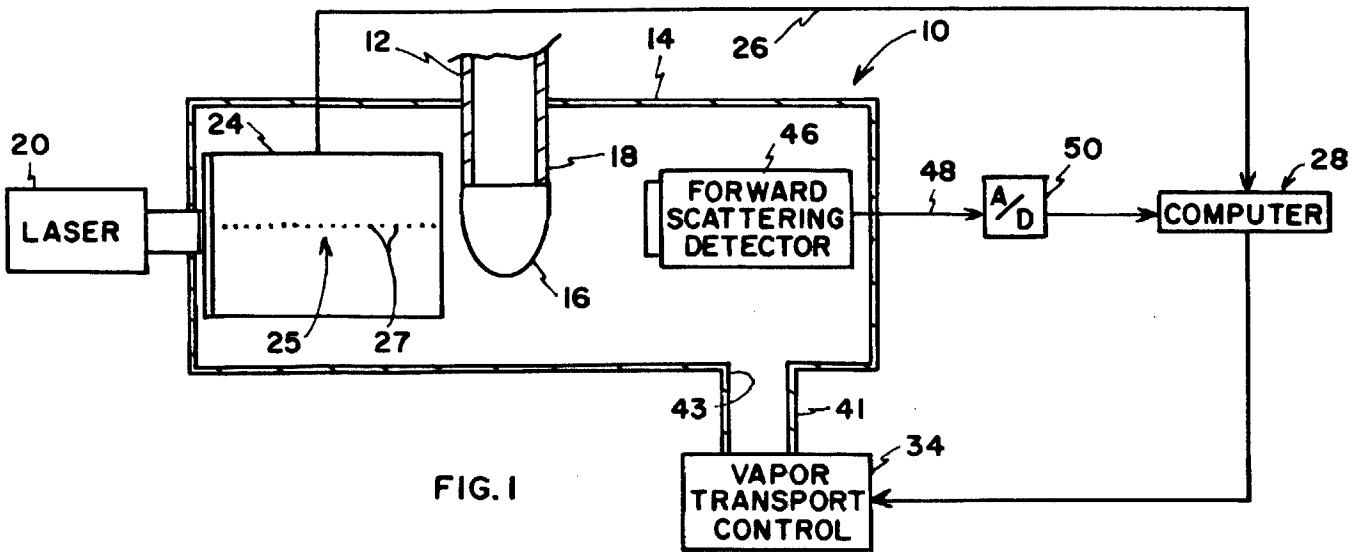
12
14
26
10
20
24
18
46
48
50
28
LASER
FORWARD SCATTERING DETECTOR
A/D
COMPUTER
16
25
27
43
41
34
VAPOR TRANSPORT CONTROL

FIG. 1

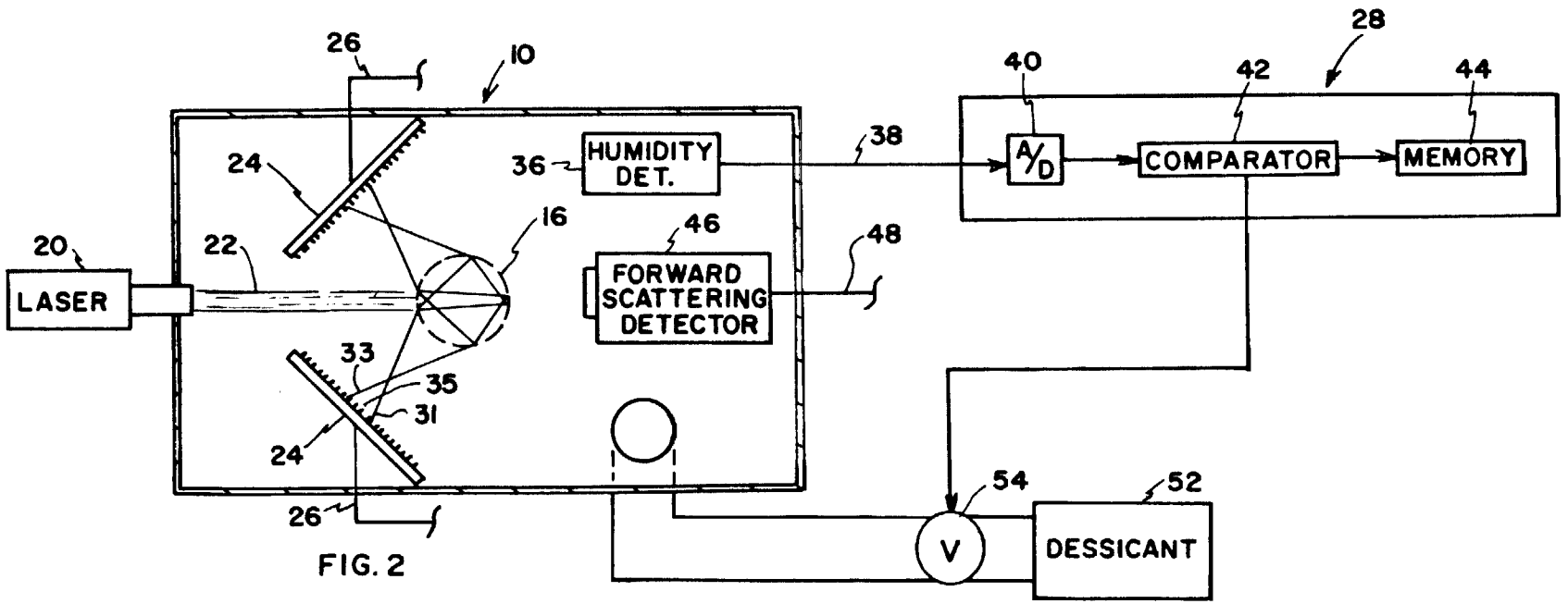
26
10
28
40
42
44
24
36
HUMIDITY DET.
38
A/D
COMPARATOR
MEMORY
20
22
16
46
48
LASER
FORWARD SCATTERING DETECTOR
33
35
31
24
54
52
V
DESSICANT
26

FIG. 2

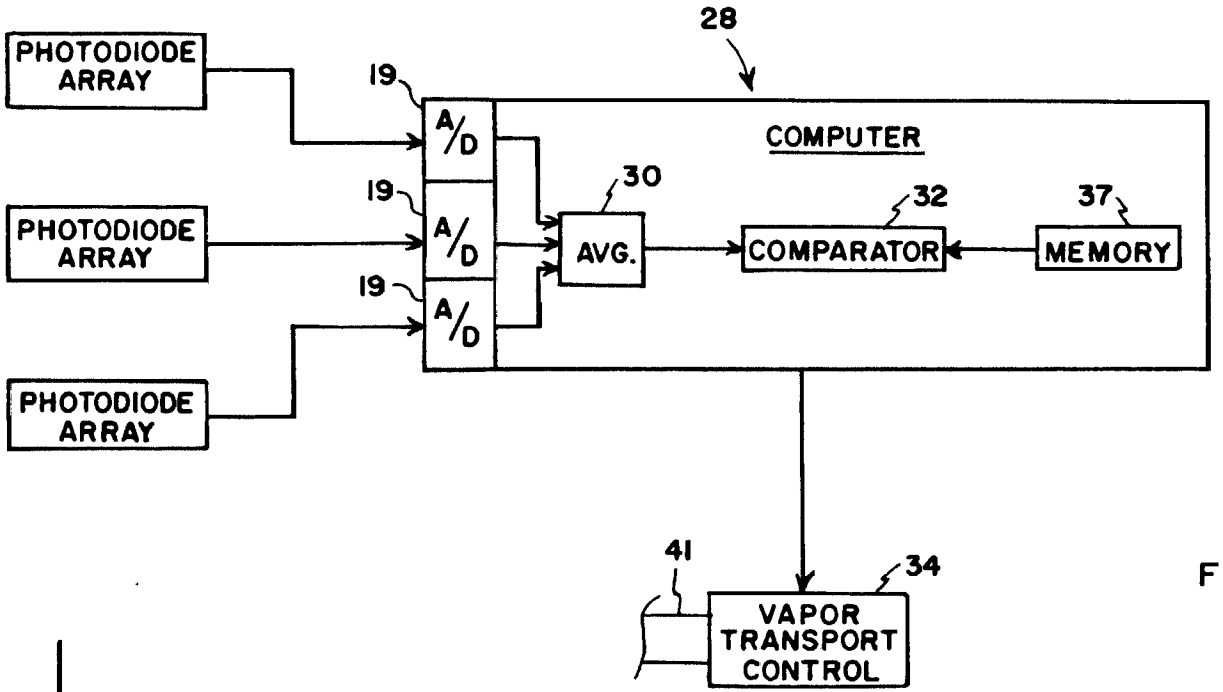
28
PHOTODIODE ARRAY
PHOTODIODE ARRAY
PHOTODIODE ARRAY
19
19
19
A/D
A/D
A/D
COMPUTER
30
AVG.
32
COMPARATOR
37
MEMORY
41
34
VAPOR TRANSPORT CONTROL

FIG. 3

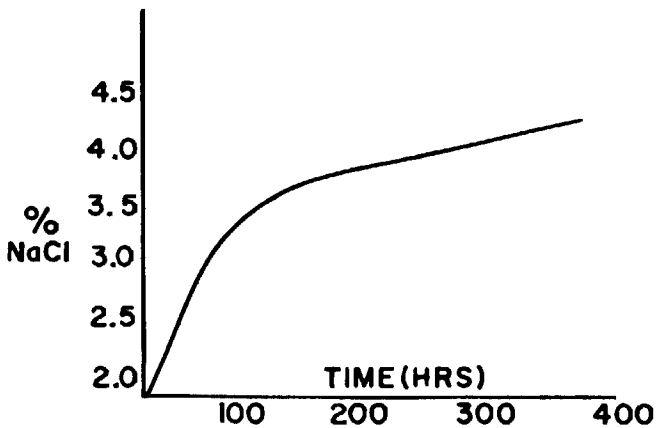
4.5
4.0
3.5
3.0
2.5
2.0
% NaCl
TIME (HRS)
100
200
300
400

FIG. 4

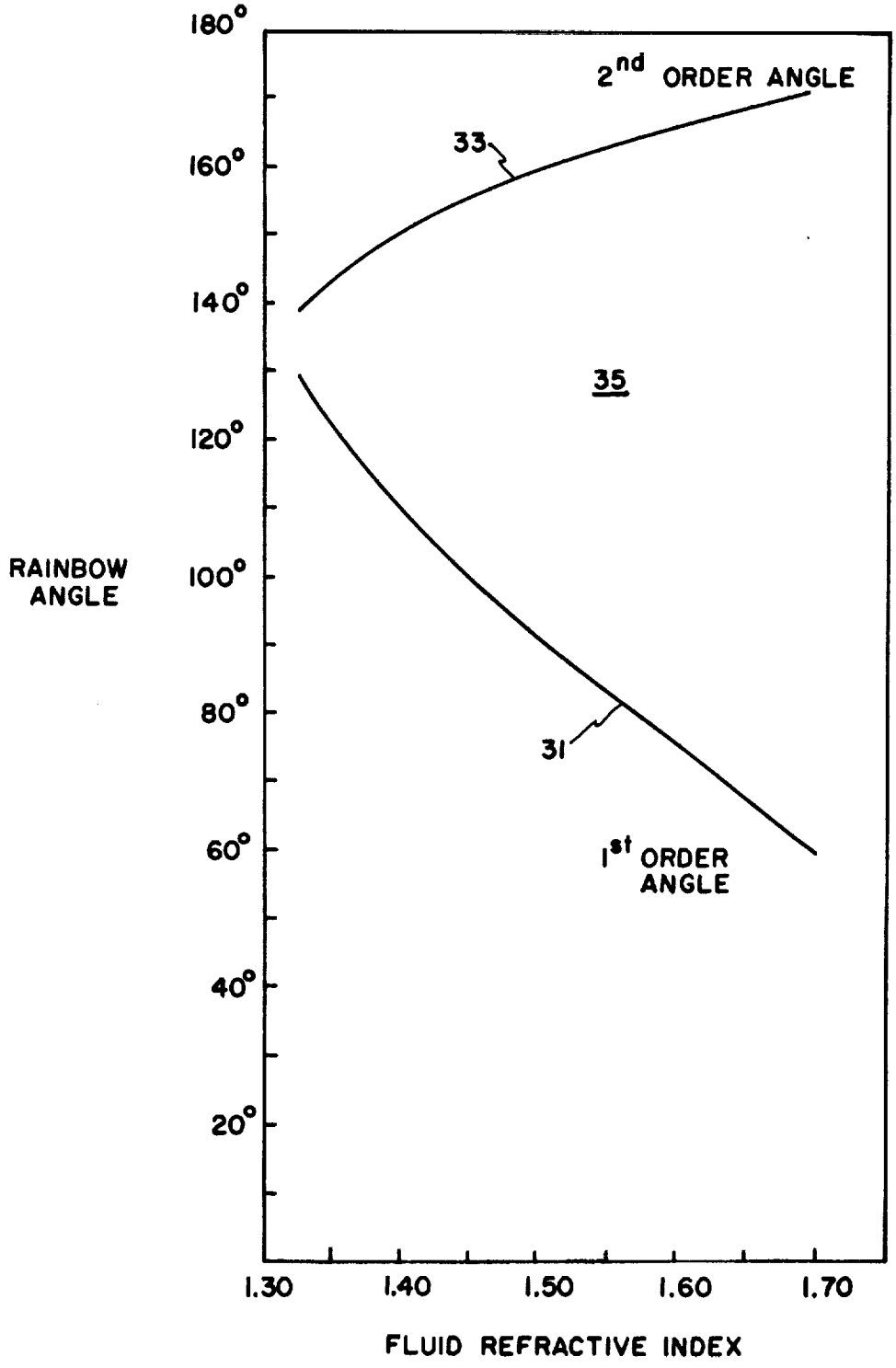
180°
160°
140°
120°
100°
80°
60°
40°
20°
RAINBOW ANGLE
2nd ORDER ANGLE
33
35
31
1st ORDER ANGLE
1.30
1.40
1.50
1.60
1.70
FLUID REFRACTIVE INDEX

FIG. 5

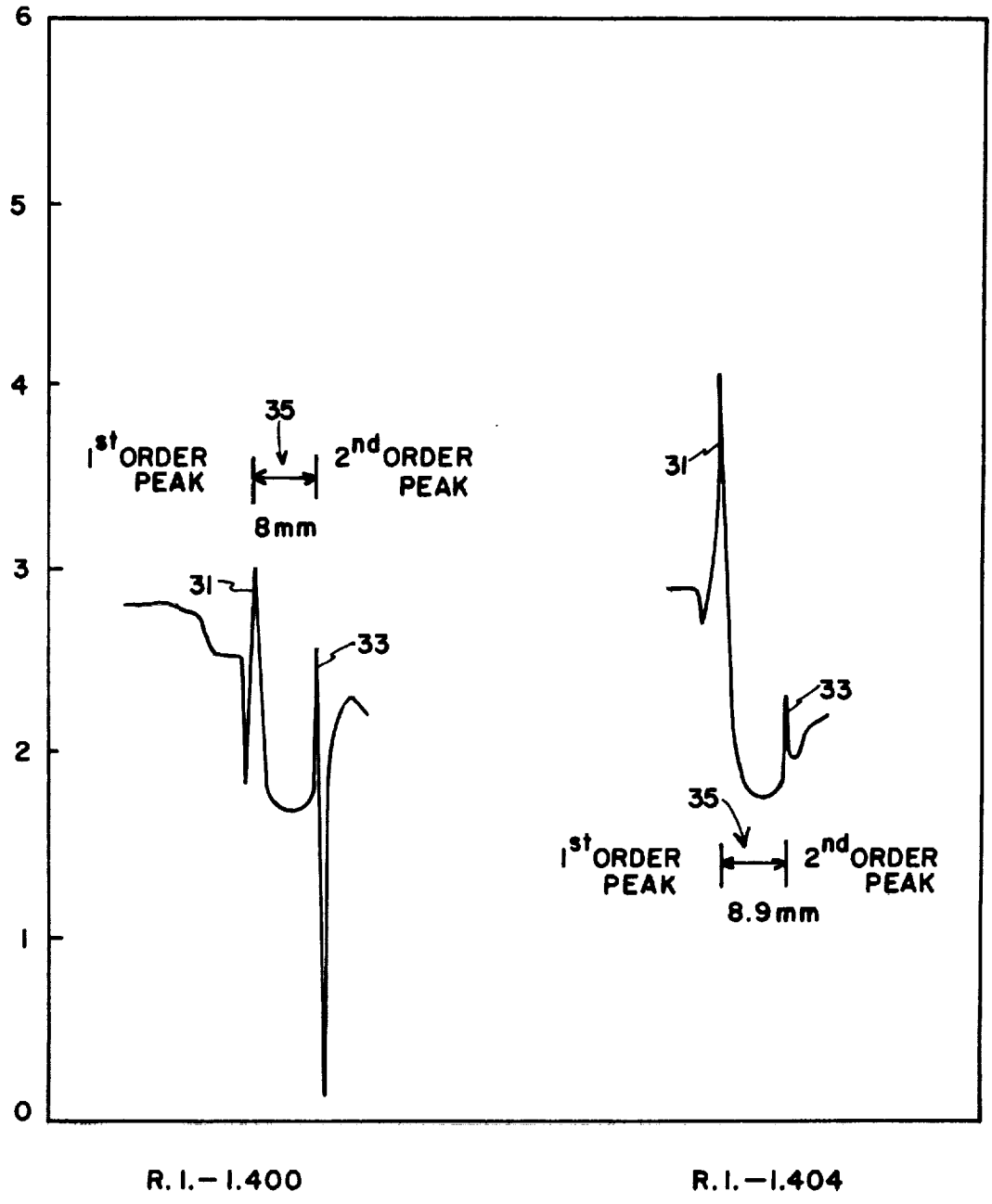
6
5
4
3
2
1
0
35
1st ORDER PEAK
2nd ORDER PEAK
8mm
31
33
R. I. – 1.400
31
33
35
1st ORDER PEAK
2nd ORDER PEAK
8.9mm
R. I. – 1.404

FIG.6