IN-26
24791
P47

NASA Technical Memorandum 104075

BRAZE ALLOY PROCESS AND STRENGTH CHARACTERIZATION STUDIES FOR 18 NICKEL GRADE 200 MARAGING STEEL WITH APPLICATION TO WIND TUNNEL MODELS

James F. Bradshaw, Paul G. Sandefur, Jr., and Clarence P. Young, Jr.

MAY 1991

(NASA-TM-104075) BRAZE ALLOY PROCESS AND STRENGTH CHARACTERIZATION STUDIES FOR 18 NICKEL GRADE 200 MARAGING STEEL WITH APPLICATION TO WIND TUNNEL MODELS (NASA) 47 p
CSCL 11F G3/26
N91-25283
Unclas
0024791

National Aeronautics and
Space Administration

Langley Research Center
Hampton, Virginia 23665-5225

In Memorium

This paper is dedicated to Mr. James F. Bradshaw who passed away on September 7, 1986. Mr. Bradshaw was a senior design engineer in the Model Engineering Section, Aeronautical Systems Branch, Systems Engineering Division. This paper documents one of his many contributions to the development of engineering design technology for cryogenic wind tunnel model systems.

CONTENTS

List of Tables and Figures

SUMMARY

A comprehensive study of braze alloy selection process and strength characterization with application to wind-tunnel models is presented. The applications for this study include the installation of stainless steel pressure tubing in model airfoil sections made of 18 Ni 200 grade maraging steel and the joining of wing structural components by brazing. Acceptable braze alloys for these applications are identified along with process, thermal braze cycle data and thermal management procedures. Shear specimens are used to evaluate comparative shear strength properties for the various alloys at both room and cryogenic (−300°F) temperatures and include the effects of electroless nickel plating. Nickel plating was found to significantly enhance both the wetability and strength properties for the various braze alloys studied.

The data provided in this paper are provided for use in selecting braze alloys for use with 18 Ni grade 200 steel in the design in wind-tunnel models to be tested in an ambient or cryogenic environment.

INTRODUCTION

The use of braze materials for pressure tube installation and joining of structural members for wind-tunnel models to be tested in a cryogenic environment has raised a number of questions with regard to alloy selection, processing and strength. This paper presents results of developmental work performed at the NASA Langley Research Center (LaRC) to address these questions. In particular, this work investigated the use of braze materials for installation of 347 stainless steel tubes in airfoils constructed of 18 Ni 200 grade maraging steel and joining of wing structural members made of 18 Ni 200 grade steel.

The results presented herein were directly applicable to two wind tunnel models which have been constructed for testing in the National Transonic Facility at LaRC. These were a .0625 scale model of the forward swept wing X-29A and a .05 aeroelastically scaled model of the F-111 TACT aircraft. Both models will be tested at full scale Reynolds numbers.

Of particular significance was the F-111 model application. The wings on this model were designed to have the same torsional and bending properties as the flight vehicle. To accomplish this, the wings were a stressed skin design with spanwise spars, reinforcing stringers and chordwise ribs. The right wing had pressure orifices. The fabrication plan required that the internal shape of the wing's upper and lower halves be finish machined and the tubing brazed in place. The halves were then assembled, brazed together and the external aerodynamic shape hand finished. This required a two phase brazing process with the tube brazing material having a higher melt temperature than that used to braze the wing halves together.

In addition to the melt temperature, there were two other important properties that had to be considered in selecting the braze material. These were the shear strength of the braze joint, and the wetting properties of the braze material on the two metals to be brazed. The F-111 model structural material was 18 Ni grade 200 maraging steel and the pressure tubing was 347 stainless steel. The wetting property was the primary concern for the pressure tube installation (the higher temperature braze operation) and the shear strength was of primary importance for joining the model parts together. Shear type specimens were selected to evaluate the strength of the various braze alloys materials at room and cryogenic temperatures and also study the wetting properties.

This report presents the results of the study of five vacuum furnace braze materials proposed for brazing stainless steel tubes to 18 Ni grade 200 and brazing 18 Ni grade 200 parts together. The use of nickel plating to enhance the wetting and strength properties of braze materials is also discussed.

SHEAR TEST SPECIMENS

The primary objective in designing the test specimens was to produce a braze joint similar to the geometry used in wind-tunnel model construction. This was accomplished by designing a 6.5 inch long lap joint type structure (see fig. 1) from which specimens were made and tested. It was believed that these specimens would closely represent the structural properties of a joint similar to the one used to connect the F-111 model wing halves together.

The shear test specimens were made by brazing two 6.5 inch by 4.5 inch plates together using two .62 inch wide splice plates (one splice plate for single shear specimens) and the test braze material. This produced a 6.5 inch wide by 9.1 inch long assembly with four (4) .25 inch lap shear surfaces (see fig. 2) for double shear specimens and two (2) .25 inch lap shear surfaces for single shear specimens. After brazing and heat treatment, the assembly was divided into five (5) equal pieces along the 6.5 inch dimension (see fig. 3). Each piece was labeled with specimen number and part identification, 1 through 5. The specimens were then machined to the required shape (see fig. 4). The overlap dimension for each shear surface was measured and the shear area calculated. For each braze material two sets of specimens were made, one electroless nickel plated on the braze surfaces and the other set unplated.

The five braze materials studied (see table I) were:

BAg 21-63 Ag 28.5 Cu 6 Sn 2.5 Ni,

BAg 13-A-56 Ag, 42 Cu, 2 Ni,

BAg 8 (BT)-72 Ag 28 Cu,

Engaloy* 491-58 Ag, 32 Cu, 10 Pd, and

BAU-4-82 Au 18 Ni.

---

* Use of trademarks or names of manufacturers in this report does not constitute an official endorsement of such products or manufacturers, either expressed or implied, by the National Aeronautics and Space Administration.

BRAZING PROCEDURE

The brazing was done in a vacuum furnace. Thermocouples were spot welded to each part to be brazed and the temperatures were monitored to assure that all parts reached the required temperature. The unplated parts were cleaned using the cleaning process described in appendix A. The nickel plated parts were cleaned and plated using the process in appendix B. A 32-pound weight consisting of six 2-inch × 2-inch × 4.75-inch steel blocks equally spaced (see fig. 5) was placed on the top splice plate to provide a uniform force to the splice plate during heating. The brazing cycles used for the specified brazing materials are given in appendix C.

TEST PROCEDURE

The test program consisted of applying a tensile load until failure occurred. Testing was done at room temperature (70°F) and at cryogenic temperature (−300°F). Tensile load and specimen elongations were measured. For the cryogenic test, (see fig. 6) the environmental chamber on the Instron load tester was cooled to −300°F and the specimen allowed to soak to obtain a uniform temperature throughout the setup. The designated numbers 1 and 4 specimen in each assembly were tested at room temperature and designated numbers 2 and 5 specimen were tested at cryogenic temperature. The number 3 specimens were kept for possible future testing. See figure 3 for illustration of specimen numbering system.

SHEAR STRENGTH TEST RESULTS

The test results (see fig. 7) show that the shear strength of all materials increased at −300°F (cryo temp.) compared with the room temperature strength. Also, with the exception of the BAU-4 material (which had excellent, indicated shear strength with or without plating after grain refinement), the electroless nickel plating improved the shear strength of the joint. The BAU-4 material was by far the strongest braze material. The

BAg 8 (BT) produced the lowest strength joint. The specimen shear areas were sized based on anticipated shear strength and loading limitations of test equipment (see fig. 4).

A review of the test results (tables I and II) for the limited number of specimens show that the results of similar specimens tested at the same temperature may vary by several thousand psi or of the order of ±10%. For example, in table II, double shear specimens 10-2 and 10-5 were made from the same assembly of a double shear unplated Engaloy 491 braze joint. The failure shear stress (based on overlap run) of 10-2 was 28,042 psi and 10-5 was 31,763 psi at −300°F. An inspection of the braze surfaces, see figures 3, 8, and 9, clearly shows that the higher strength 10-5 specimen had a larger area of braze material than specimen 10-2, which suggests the importance of the wetting property of the braze material. There was no attempt in this study to measure the actual wetted area of the brazed joint, i.e., the area on the shear surface that had been joined by the braze material. All shear stress calculations were based on the idealized overlap area for a perfect braze joint.

As previously stated, all stresses were calculated using the overlap area of the splice plate. In cases where several shear surfaces failed, the larger areas on opposite sides were used to calculate the failure stress which is a conservative approach. As an example, specimen number 12-4, see figure 10, had a failure of surfaces 1, 2, and 3. The stress was calculated using the sum of area 1 and 3. But in the case of specimen 13-4 (see fig. 11) the area of surface 2 and 3 was used.

A review of the strip charts shows that all specimens behaved similar in that elongation was essentially linear until failure of the brazed joints (see fig. 12). The single shear specimens consistently failed at a lower stress level than the corresponding double shear specimens. This is attributed primarily to the design of the single shear specimen (see fig. 3) which have the shear surfaces off center, producing a combination of shear and peel stresses on the brazed joint. Therefore, these results are not valid as pure shear data but it is anticipated that the actual shear strength would be higher given the absence of peel type loading.

The averaged shear stress listed in table III and figure 7, for the double shear specimens, may be used as a criteria for the design of shear type joints in 18 Ni 200 grade maraging steel models. A more conservative approach would be to use the minimum values taken from the data in table II. The data for the single shear tests in tables I and table IV provide a basis for design allowable shear which may be used for braze joints that have both shear and peel type loads present.

TEMPERATURE MANAGEMENT

Proper control of the temperature gradient through the model part is critical when vacuum brazing either pressure tubing or structural joints. For example, many parts are rough machined to oversize prior to the brazing process and may have a large mass such as a fuselage and a thin plate shape for wings. When this assembly is placed in a furnace the thin plate shape will heat up much faster than the fuselage mass with possible distortion occurring due to temperature gradients. Therefore, a system must be developed to control the heating rate of the various model surfaces. This type of problem had to be solved before the pressure tubes could be brazed in the NTF X-29 wind tunnel model wings.

The actual part consisted of a half fuselage wing structure (see fig. 13) rough machined to shape. A thermal mass model of this part was made using square bars and plates to simulate the actual model fuselage configuration. Thermocouples were spot welded to the bars and plates and the mass model was then used to develop a procedure for controlling the temperature gradients in the actual model as described in the following paragraphs.

The heating of the model part was controlled by placing a 347 stainless steel (.032 inch thick) sheet around the model (see figs. 14 and 15). A larger box shape shield, made of 347 stainless steel, was placed over the first shield (see figs. 16 and 17) to produce a 2-inch gap between the two shields. A Q-felt insulation material was then placed between the model and the furnace hearth. Using this system the heating of the thinner areas of the model could be controlled to an acceptable rate.

PRESSURE TUBE INSTALLATION

Langley has made extensive use of vacuum furnace brazing as a method of installing pressure tubing in all types of models. Experience has demonstrated that selection of the braze alloy should be based on parent material temperature limitation, types of materials to be joined, the joint configuration and the parts configuration. The liquid temperature of the braze material should never be the only consideration for this selection.

A typical problem encountered in brazing a 347 stainless steel tube to 18 Ni maraging steel is that the high Chromium metals such as 300 series stainless steels are generally difficult to wet at temperatures below 1800°F. The BAU-4 (gold nickel) alloy with an 1825°F brazing temperature is a good braze material if the part configuration (e.g., highly contoured thin section) can endure the high temperature without altering the material microstructure and hence the material properties, and without significant distortion.

For conditions requiring a temperature to be less than 1700°F, the use of electroless nickel plating of both the model part and the 347 stainless steel tubing improved the wetting properties of BAg 13-A, BAg 21, and Engaloy 491 braze material. It should be pointed out that care should be taken to avoid scraping the nickel plating off either part.

A prime consideration for using two step brazing is to use BAU-4 (gold nickel, 1825°F temperature) followed by Engaloy 491 (1610°F temperature) because the 1610°F temperature can serve as a grain refinement process which tends to improve the charpy properties of the 18 Ni 200 grade material at −300°F (see appendix D).

Another consideration for wind tunnel pressure models application is to use phosphorus deoxidized copper tubing (copper alloy number 122) and Engaloy 491 braze material which has a 1610°F braze temperature. This copper alloy is acceptable for cryogenic use. Also for a two phase brazing process, the first braze cycle can be with the Engaloy 491 (1610°F) with BAg 21 (1500°F) as the second braze.

During a subsequent study related to pressure tube installation it was observed that thin sections of 18 Ni 200 grade maraging steel, which had metal removed by electric discharge machining (EDM), distorted (oil canned) significantly during the brazing operation. Although the maraging steel has generally good dimensionally stability it appears that caution should be exercised when heat treating thin sections (i.e., 0.60 or less) that have EDM surfaces.

DISCUSSION OF RESULTS

The shear specimens used in this study were designed to represent a typical braze joint that may be used in model construction. In most models, the braze joint is used to join parts together to produce a monolithic-type structure. Most of these joints are internal or in a position that they cannot be inspected to evaluate the quality of the braze joint. The design of the test specimens using a 6.5 inch long braze joint and the selection of the specimens positioned along this joint was done to provide some measure of the strength of a long brazed joint. Because of the limitation of this test program the effects of the presence of tensile stresses in the specimen on the shear stress capability in the brazed joint are unknown. Also since the number of specimens were limited, a more meaningful measure of mean and dispersion failure stresses cannot be obtained. Therefore, minimum values are recommended for use in design.

The mechanism by which the electroless nickel plating enhances the wetting and strength properties of the brazed joint is not clearly understood. It may be that the plating process results in exceptionally clean, well prepared surfaces which are more difficult to achieve without plating. Another possibility is that the diffusion of the nickel plating material into the parent material provides a metallurgically altered surface which enhances both flow and adherance properties. However, good enhancement provided by nickel plating for this material may not work for other materials.

The wetting properties of the braze alloy is of primary importance for pressure tube installation. The liquid temperature of the braze material must be considered to assure that it is within the allowable temperature range for the model and tubing materials.

The temperature is critical for a two step brazing process such as that required for the F-111 model. However, good wetting properties of the braze alloy are needed to produce a leak-proof joint between the tube and the model. LaRC has had excellent results using the BAU-4 (gold nickel) braze alloy (1825°F brazing temperature) to install 347 stainless steel tubing in 18 Ni 200 grade model material. The use of electroless nickel plating to enhance the wetting properties of BAg-13A, BAg 21, and Engaloy 491 has produced good results in pressure tube installation. Another acceptable approach to tubing installation would be to use phosphorus deoxidized copper tubing (copper alloy number 122) with the Engaloy 491 braze alloy.

There is a potential problem of grain growth in 18 Ni 200 grade material when exposed to high temperatures (see reference 1). The 1825°F melt temperature of the BAU-4 braze alloy can result in an unacceptable grain growth condition that lowers toughness and strength which, based on LaRC experience, can be corrected by following the high temperature braze cycle with a 1610°F cycle prior to final heat treatment of the material (see appendix D). Tests conducted in support of this study show that the temperature cycle of 1825°F, air cool, 1610°F, air cool, and 900°F 3 hrs. air cool allows recovery of fine grain structure. Alteration of parent material microstructure is a primary consideration when selecting single or dual temperature braze systems.

CONCLUSIONS

Based on the results of these studies the following conclusions were obtained:

1. A number of braze alloys were found to be suitable for use in wind-tunnel models constructed of 18 Ni grade 200 steel.

2. Electroless nickel plating of the surfaces to be brazed significantly enhances both wetability and shear strength properties.

3. The shear strength properties presented in this paper provide a basis for determining design allowable values. It is recommended that minimum shear strength values be used.

4. Thermal management of vacuum furnace brazing cycles is needed to assure a more uniform heating of model parts having significant differences in thermal mass, thereby enhancing the braze process.

5. Brazing cycles should be established such that the use of high temperature braze alloys will not significantly alter the microstructure of the parent material which can lead to reductions in strength and toughness properties.

6. The data provided in this paper can be used for brazing applications involving 18 Ni 200 grade steel and may be applicable to other materials as well.

REFERENCE

1. Rush, Homer F.: Grain-Refining Heat Treatments to Improve Cryogenic Toughness of High-Strength Steels, NASA TM 85816,1984.

APPENDIX A

CLEANING PROCEDURES FOR UNPLATED PARTS USED IN THE BRAZING OPERATION

A. Clean parts with greases, oils, marking dyes and inks with acetone or methyl ethyl ketone (MEK).

   1. Clean by hand, using bristle brushes (no wire brushes) and/or wipers.

B. Clean in a detergent until water will not bead.

   1. Use 6 oz. Turco 4215 NC-LT, or equal, per gallon of water.
   2. Place in deionized water at room temperature for 15 minutes minimum.
   3. Rinse thoroughly in deionized water.

C. Emerse parts in liquid freon TF; use ultrasonic cleaning for 15 minutes.

D. Ultrasonics may heat parts enough to cause a discoloration (oxidation). If this happens the cleaning procedure is repeated while making sure parts are not heated (kept cool or at room temperatures). This is a problem on metals that oxide readily (maraging steels).

E. Allow to dry and then wrap in clean brown paper and put in plastic bag until ready to put in vacuum furnace.

F. This cleaning procedure may be used on plated parts for removal of light contamination due to handling.

APPENDIX B

PROCEDURES FOR CLEANING AND ELECTROLESS NICKEL PLATING OF 18 Ni 200 GRADE MARAGING STEEL

All machining and center punching for braze alloy clearances must be completed prior to beginning cleaning and plating. Any work that might remove plating in braze areas will prevent braze flow.

1. Submerge in acetone and hand scrub using bristle brushes and cloth towels to remove oil and dirt.
2. Vapor degrease in freon and ultrasonics.
   a. Use Type I Mil. Spec. C-81302C Trichlorotrifluoroethane or equal.
3. Clean in a detergent until water will not bead.
   a. Place in Turco 4215 NC-LT. 6 oz. per gallon of water. Place in deionized water at room temperature for 15 minutes minimum.
4. Rinse in deionized water, thoroughly.

   CAUTION

   Once the work piece goes into the detergent bath it must not be dried at any stage until it is plated—from detergent through plating is a continuous operation.
5. Place in Hydrocloric Acid Bath

   59% Hydrochloric Acid—by volume

   41% Deionized Water—by volume

   70°C (158°F)

   10 minutes ±1 minute (Critical)
6. Rinse exceptionally well in deionized water
   a. Pay special attention to areas where acid could be trapped.
7. Place in Nitric/Hydrofluoric Acid Bath
   a. 50% Nitric Acid—by volume

      10% Hydroflouric Acid—by volume

40% deionized water—by volume

Room temperature

10 seconds +0 seconds −1 second (Critical) rapid metal removal

8. Rinse exceptionally well in deionized water
   a. Pay special attention to areas where acid could be trapped.
9. Place in Hydrochloric Acid Bath
   a. 59% Hydrochloric Acid—by volume

      41% Deionized water—by volume

      70°C (158°F)

      5 minutes—maximum +0 minutes −1 minute
10. Rinse exceptionally well in deionized water
    a. Pay special attention to areas where acid could be trapped.
11. Place in Electroless Nickel Plating Bath.
    a. High Purity electroless nickel—manufactured by Shipley Company, Newton, Mass.

       Niposit 468

       Mix according to manufacturers specifications

       Specs. furnished with material order

       Suspend work piece in bath with stainless wire

       Bath temperature is 158°F to 160°F

       Plating will start when job reaches bath temperature

       Bubble activity around job will signify when plating starts

       Hold for 15 minutes to get approximately .000087 inch-thickness

       Bath must be agitated during plating

       Bath will plate 3 to 3 1/2 tenths of a mil per hour

       Ph of bath to be 6.8 to 7.5

       Purity of nickel is 99.5%

       Hardness as plated is Rc 63

Melting point is 1455°C (2646°F)

Color	Semi-Bright
Boron	0.25%

12. Rinse in Deionized water, THOROUGHLY.
13. Rinse in isopropanol (alcohol) and blow dry with clean air.
14. Wrap in clean brown paper and place in zip-lock type plastic bag until preparing for brazing.

APPENDIX C

BRAZING PROCESSES FOR VARIOUS ALLOYS

The following processes were used for the brazing materials listed.

BAg 21–63 Ag, 28.5, Cu 6Sn, 2.5 Ni .003 thick foil

Plated and Unplated Specimens

Heat to 1425°F hold until all thermocouples read 1425°F ± 5°F

Heat to 1500°F hold 10 minutes

Vacuum cool to less than 300°F

Air cool

BAg 13A–56 Ag, 42 Cu, 2 Ni .003 thick foil

Plated and Unplated Specimens

Heat to 1600°F hold until all thermocouples read 1600°F ± 10°F

Heat to 1675°F hold 10 minutes

Vacuum cool to less than 300°F

Air cool less than 90°F

BAg 8 (BT)—72 Ag, 28 Cu .003 thick foil

Unplated Specimens

Heat to 1400°F hold until all thermocouples read 1400°F ± 10°F

Heat to 1550°F hold 20 minutes

Vacuum cool to less than 300°F

Air cool

Plated Specimens

Heat to 1400°F hold until all thermocouples reach 1400°F ± 10°F

Heat to 1500°F hold 10 minutes

Vacuum cool to less than 300°F

Air cool

ENGALOY 491–58 Ag, 32 Cu, 10 Pd powder

Unplated

Heat to 1475°F hold 20 minutes

Heat to 1675°F hold 10 minutes

Vacuum cool to less than 300°F

Air cool

Plated

Heat to 1475°F hold 20 minutes

Heat to 1610°F until all parts at equilibrium

Vacuum cool to less than 300°F

Air cool

BAU 4 (gold nickel)—82 Ag, 18 Ni .003 thick foil

The same process was used for both plates and unplated specimens.

Heat to 1650°F hold 20 minutes

Heat to 1825°F hold 4 minutes

Vacuum cool to less than 300°F

Air cool

Note: The vacuum furnace used cannot be opened to the atmosphere until the temperature is below 300°F

APPENDIX D

EFFECT OF BRAZE TEMPERATURE ON CHARPY IMPACT PROPERTIES OF 18 Ni 200 GRADE MARAGING STEEL

A study of the effects of vacuum furnace brazing on the charpy impact properties at cryogenic temperatures of 18 Ni 200 grade maraging steel has been completed. The results are summarized in table D-1. This study consisted of cutting one piece of stock material into several pieces. One piece went through the standard heat treatment of 900°F for 3 hours and air cooled. The other pieces were heated in the vacuum furnace through the same brazing cycle as would be used for model parts. This study showed that the material heated to 1825°F followed by the 900°F 3-hour treatment has a lower charpy value at room and cryogenic temperatures than the stock material which was likely due to excessive grain growth. The material that was heated to 1825°F and reheated to 1610°F followed by the 900° 3-hour heat treatment had about the same charpy value at room and cryogenic temperature as the stock material.

TABLE D-I CHARPY IMPACT PROPERTIES FOR 18 Ni 200 GRADE MARAGING STEEL SPECIMENS FOR STANDARD HEAT TREATMENT AND VACUUM FURNACE BRAZING CYCLES

Solution Annealed ① 900°F - 3 hrs. Aircool				Solution Annealed ② 1650°F - 20 min. 1825°F - 4 min. Aircool 900°F - 3 hrs. Aircool				Solution Annealed ③ 1650°F - 20 min. 1825°F - 4 min. Aircool 1475°F - 20 min. 1610°F - 10 min. Aircool 900°F - 3 hrs. Aircool				Solution Annealed ④ 1650°F - 20 min. 1825°F - 4 min. Aircool 1475°F - 20 min. 1610°F - 20 min. Aircool 900°F - 3 hrs. Aircool			
Tranverse		Longitudinal		Transverse		Longitudinal		Transverse		Longitudinal		Transverse		Longitudinal	
Cryo	Room	Cryo	Room	Cryo	Room	Cryo	Room	Cryo	Room	Cryo	Room	Cryo	Room	Cryo	Room
20	31	22	44	14	29	13	37	17	34	22	47	16	35	20	44
20	34	23	44	15	30	16	40	21	32	22	45	20	36	22	42
20	35	23	46	14	28	15	36	18	33	22	49	19	34	22	49
18	33	22	51	14	28	17	38	18	33	22	49	17	33	22	47
Average				Average				Average				Average			
19.5	33.2	22.5	46.2	14.2	28.7	15.2	37.7	18.5	33	22	47.5	18	34.5	21.5	45.5

NOTE: All charpy impact values are given in ft-lbs.

① - As received from mill.

② - Standard braze cycle for BAu-4 braze alloy.

③ - Braze and grain refining cycle as developed at LaRC.

④ - Braze and grain refining cycle with grain refining cycle doubled.

TABLE I - BRAZE ALLOY SPECIMENS SHEAR TEST RESULTS - SINGLE SHEAR

Specimen Number	Surface Area, in ^{2}		Surface Failed	Load lbs	Stress, psi	Test Temp °F	Surface Condition	Braze Temp °F	Braze Alloy	Type	Braze Material Composition
	No. 1	No. 2									
1-1	.2489	.2396	1	2800	11208	Room	Unplated	1500	BAg-21	.003 Foil	63 Ag 28.5 Cu 6 Sn 2.5 Ni
1-4	.2444	.2419	1	2430	9942	Room	Unplated	1500	BAg-21	.003 Foil	63 Ag 28.5 Cu 6 Sn 2.5 Ni
1-2	.2484	.2399	1	2450	9863	-300	Unplated	1500	BAg-21	.003 Foil	63 Ag 28.5 Cu 6 Sn 2.5 Ni
1-5	.2200	.2138	1	2080	9454	-300	Unplated	1500	BAg-21	.003 Foil	63 Ag 28.5 Cu 6 Sn 2.5 Ni
2-1	.1987	.2023	1	3160	15903	Room	Plated	1500	BAg-21	.003 Foil	63 Ag 28.5 Cu 6 Sn 2.5 Ni
2-4	.2455	.2505	2	4200	16766	Room	Plated	1500	BAg-21	.003 Foil	63 Ag 28.5 Cu 6 Sn 2.5 Ni
2-2	.2464	.2505	2	4390	17525	-300	Plated	1500	BAg-21	.003 Foil	63 Ag 28.5 Cu 6 Sn 2.5 Ni
2-5	.2449	.2490	2	4300	17269	-300	Plated	1500	BAg-21	.003 Foil	63 Ag 28.5 Cu 6 Sn 2.5 Ni
3-1	.2365	.2439	1	2600	10993	Room	Unplated	1675	BAg-13A	.003 Foil	56 Ag 42 Cu 2 Ni
3-4	.2430	.2450	2	3000	12244	Room	Unplated	1675	BAg-13A	.003 Foil	56 Ag 42 Cu 2 Ni
3-2	.2486	.2409	1	3470	13958	-300	Unplated	1675	BAg-13A	.003 Foil	56 Ag 42 Cu 2 Ni
3-5	.2374	.2454	2	3775	15389	-300	Unplated	1675	BAg-13A	.003 Foil	56 Ag 42 Cu 2 Ni
16-1	.2440	.2439	2	5200	21320	Room	Plated	1675	BAg-13A	.003 Foil	56 Ag 42 Cu 2 Ni
16-4	.2449	.2459	2	5180	21065	Room	Plated	1675	BAg-13-A	.003 Foil	56 Ag 42 Cu 2 Ni
16-2	.2451	.2450	2	6840	27918	-300	Plated	1675	BAg-13A	.003 Foil	56 Ag 42 Cu 2 Ni
16-5	.2439	.2462	2	6600	26807	-300	Plated	1675	BAg-13A	.003 Foil	56 Ag 42 Cu 2 Ni
17-1	.2249	.2473	2	2270	9179	Room	Unplated	1550	BAg-8 (BT)	.003 Foil	72 Ag 28 Cu
17-4	.2378	.2461	2	3175	12901	Room	Unplated	1550	BAg-8 (BT)	.003 Foil	72 Ag 28 Cu
17-2	.2462	.2293	1	2075	8428	-300	Unplated	1550	BAg-8 (BT)	.003 Foil	72 Ag 28 Cu
17-5	.2414	.2441	1	3000	12428	-300	Unplated	1550	BAg-8 (BT)	.003 Foil	72 Ag 28 Cu
18-1	.2357	.2477	1	3940	16716	Room	Plated	1500	BAg-8 (BT)	.003 Foil	72 Ag 28 Cu
18-4	.2415	.2495	1	5080	21035	Room	Plated	1500	BAg-8 (BT)	.003 Foil	72 Ag 28 Cu
18-2	.2369	.2483	1	5634	23782	-300	Plated	1500	BAg-8 (BT)	.003 Foil	72 Ag 28 Cu
18-5	.2433	.2491	2	5700	22882	-300	Plated	1500	BAg-8 (BT)	.003 Foil	72 Ag 28 Cu
19-1	.2460	.2433	1	3900	15854	Room	Unplated	1675	Engaloy 491	Powder	58 Ag 32 Cu 10 Pd
19-4	.2451	.2410	1	5240	21379	Room	Unplated	1675	Engaloy 491	Powder	58 Ag 32 Cu 10 Pd
19-2	.2424	.2451	1	5800	23927	-300	Unplated	1675	Engaloy 491	Powder	58 Ag 32 Cu 10 Pd
19-5	.2460	.2388	2	6280	26298	-300	Unplated	1675	Engaloy 491	Powder	58 Ag 32 Cu 10 Pd
20-1	.2430	.2442	2	3405	13943	Room	Plated	1610	Engaloy 491	Powder	58 Ag 32 Cu 10 Pd
20-4	.2392	.2407	2	5930	24636	Room	Plated	1610	Engaloy 491	Powder	58 Ag 32 Cu 10 Pd
20-2	.2419	.2468	2	6280	25445	-300	Plated	1610	Engaloy 491	Powder	58 Ag 32 Cu 10 Pd
20-5	.2370	.2488	2	5700	22910	-300	Plated	1610	Engaloy 491	Powder	58 Ag 32 Cu 10 Pd

TABLE I - BRAZE ALLOY SPECIMENS SHEAR TEST RESULTS - SINGLE SHEAR (Continued)

Specimen Number	Surface Area, in^2		Surface Failed	Load lbs	Stress, psi	Test Temp °F	Surface Condition	Braze Temp °F	Braze Alloy	Type	Braze Material Composition
	No. 1	No. 2									
21-1	.2381	.2471	1	8600	36119	Room	Unplated	1800	BAu-4	.003 Foil	82 Au 18 Ni
21-4	.2400	.2454	1	10700	44583	Room	Unplated	1800	BAu-4	.003 Foil	82 Au 18 Ni
21-2	.2373	.2476	1	12265	51685	-300	Unplated	1800	BAu-4	.003 Foil	82 Au 18 Ni
21-5	.2448	.2419	1	9600	39216	-300	Unplated	1800	BAu-4	.003 Foil	82 Au 18 Ni
22-1	.2416	.2418	1	6600	27318	Room	Plated	1800	BAu-4	.003 Foil	82 Au 18 Ni
22-4	.2428	.2385	2	7500	31447	Room	Plated	1800	BAu-4	.003 Foil	82 Au 18 Ni
22-2	.2409	.2549	2	9300	36485	-300	Plated	1800	BAu-4	.003 Foil	82 Au 18 Ni
22-5	.2435	.2488	1	8265	33942	-300	Plated	1800	BAu-4	.003 Foil	82 Au 18 Ni

TABLE II - BRAZE ALLOY SPECIMENS SHEAR TEST RESULTS - DOUBLE SHEAR

Specimen Number	Surface Area, in^2				Surface Failed	Load lbs	Stress, psi	Test Temp F	Surface Condition	Braze Temp F	Braze Alloy	Type	Braze Material Composition
	No. 1	No. 2	No. 3	No. 4									
4-1	.1830	.1811	.1877	.1734	1,4	7740	21717	Room	Unplated	1500	BAg-21	.003 Foil	63 Ag 28.5 Cu 6 Sn 2.5 Ni
4-4	.1850	.1902	.1863	.1721	1,2,3	8270	21965	Room	Unplated	1500	BAg-21	.003 Foil	63 Ag 28.5 Cu 6 Sn 2.5 Ni
4-2	.1839	.1861	.1873	.1730	1,3,4	8930	24057	-300	Unplated	1500	BAg-21	.003 Foil	63 Ag 28.5 Cu 6 Sn 2.5 Ni
4-5	.1847	.1756	.1856	.1712	1,2,4	9535	26791	-300	Unplated	1500	BAg-21	.003 Foil	63 Ag 28.5 Cu 6 Sn 2.5 Ni
5-1	.1829	.1910	.1859	.1910	1,2,3,4	14680	38429	Room	Plated	1500	BAg-21	.003 Foil	63 Ag 28.5 Cu 6 Sn 2.5 Ni
5-4	.1829	.1869	.1841	.1862	2,3,4	14360	38488	Room	Plated	1500	BAg-21	.003 Foil	63 Ag 28.5 Cu 6 Sn 2.5 Ni
5-2	.1832	.1872	.1861	.1867	1,2,3,4	17535	46897	-300	Plated	1500	BAg-21	.003 Foil	63 Ag 28.5 Cu 6 Sn 2.5 Ni
5-5	.1895	.1854	.1842	.1860	1,2,3,4	18610	49560	-300	Plated	1500	BAg-21	.003 Foil	63 Ag 28.5 Cu 6 Sn 2.5 Ni
6-1	.1866	.1921	.1888	.2040	1,3	9730	25919	Room	Unplated	1675	BAg-13A	.003 Foil	56 Ag 42 Cu 2 Ni
6-4	.1823	.1950	.1824	.1865	1,2,3	11000	29147	Room	Unplated	1675	BAg-13A	.003 Foil	56 Ag 42 Cu 2 Ni
6-2	.1822	.1880	.1807	.1868	1,2,3,4	14650	39088	-300	Unplated	1675	BAg-13A	.003 Foil	56 Ag 42 Cu 2 Ni
6-5	.1833	.1969	.1823	.1855	1,2,4	13950	36480	-300	Unplated	1675	BAg-13A	.003 Foil	56 Ag 42 Cu 2 Ni
7-1	.1885	.1906	.1858	.1934	1,2,3	11900	30797	Room	Plated	1675	BAg-13A	.003 Foil	56 Ag 42 Cu 2 Ni
7-4	.1868	.1906	.1861	.1914	2,3	11640	30900	Room	Plated	1675	BAg-13A	.003 Foil	56 Ag 42 Cu 2 Ni
7-2	.1864	.1889	.1866	.1876	2,3	16350	43542	-300	Plated	1675	BAg-13A	.003 Foil	56 Ag 42 Cu 2 Ni
7-5	.1863	.1857	.1842	.1876	2,3	14600	39740	-300	Plated	1675	BAg-13A	.003 Foil	56 Ag 42 Cu 2 Ni
8-1	.1878	.1785	.1823	.1843	2,4	6230	17172	Room	Unplated	1675	BAg-8 (BT)	.003 Foil	72 Ag 28 Cu
8-4	.1860	.1789	.1820	.1846	1,3	6900	18750	Room	Unplated	1675	BAg-8 (BT)	.003 Foil	72 Ag 28 Cu
8-2	.1874	.1788	.1828	.1849	2,4	9125	25089	-300	Unplated	1675	BAg-8 (BT)	.003 Foil	72 Ag 28 Cu
8-5	.1863	.1788	.1821	.1839	1,3	7500	20358	-300	Unplated	1675	BAg-8 (BT)	.003 Foil	72 Ag 28 Cu
9-1	.1837	.1871	.1857	.1862	1,3	10650	28830	Room	Plated	1500	BAg-8 (BT)	.003 Foil	72 Ag 28 Cu
9-4	.1812	.1831	.1819	.1850	1,3	10600	29193	Room	Plated	1500	BAg-8 (BT)	.003 Foil	72 Ag 28 Cu
9-2	.1818	.1876	.1890	.1902	1,3	15100	39653	-300	Plated	1500	BAg-8 (BT)	.003 Foil	72 Ag 28 Cu
9-5	.1817	.1809	.1813	.1852	1,2,4	15400	41973	-300	Plated	1500	BAg-8 (BT)	.003 Foil	72 Ag 28 Cu
10-1	.1805	.1869	.1828	.1865	1,3	8600	23671	Room	Unplated	1675	Engaloy 491	Powder	58 Ag 32 Cu 10 Pd
10-4	.1669	.1871	.1663	.1841	2,3	6100	17260	Room	Unplated	1675	Engaloy 491	Powder	58 Ag 32 Cu 10 Pd
10-2	.1753	.1846	.1772	.1813	1,4	10000	28042	-300	Unplated	1675	Engaloy 491	Powder	58 Ag 32 Cu 10 Pd
10-5	.1638	.1870	.1634	.1857	2,3	11130	31763	-300	Unplated	1675	Engaloy 491	Powder	58 Ag 32 Cu 10 Pd
11-1	.1867	.1886	.1401	.1831	1,3	15350	46971	Room	Plated	1610	Engaloy 491	Powder	58 Ag 32 Cu 10 Pd
11-4	.1839	.1884	.1886	.1835	2,4	14490	38650	Room	Plated	1610	Engaloy 491	Powder	58 Ag 32 Cu 10 Pd
11-2	.1840	.1890	.1890	.1821	2,3,4	19790	52354	-300	Plated	1610	Engaloy 491	Powder	58 Ag 32 Cu 10 Pd
11-5	.1621	.1570	.1570	.1637	1,4	17565	54721	-300	Plated	1610	Engaloy 491	Powder	58 Ag 32 Cu 10 Pd

TABLE II - BRAZE ALLOY SPECIMENS SHEAR TEST RESULTS - DOUBLE SHEAR (Continued)

Specimen Number	Surface Area, in^2				Surface Failed	Load lbs	Stress, psi	Test Temp F	Surface Condition	Braze Temp F	Braze Alloy	Type	Braze Material Composition
	No. 1	No. 2	No. 3	No. 4									
13-1	.1230	.1216	.1227	.1226	1,2,3	16200	65934	Room	Unplated	1800	BAu-4	.003 Foil	82 Au 18 Ni
13-4	.1688	.1661	.1701	.1697	1,2,3	19630	57923	Room	Unplated	1800	BAu-4	.003 Foil	82 Au 18 Ni
13-2	*	.1234	*	.1225	1,2,3	19880	**	-300	Unplated	1800	BAu-4	.003 Foil	82 Au 18 Ni
13-5	.1237	.1191	.1242	.1207	2,3	20000	82203	-300	Unplated	1800	BAu-4	.003 Foil	82 Au 18 Ni
12-1	.1563	*	.1582	*	1,2,3	19350	**	Room	Plated	1800	BAu-4	.003 Foil	82 Au 18 Ni
12-4	.1410	.1539	.1413	.1525	1,2,3	16450	55725	Room	Plated	1800	BAu-4	.003 Foil	82 Au 18 Ni
12-2	.1191	.1084	.1193	.1099	2,3,4	18265	80215	-300	Plated	1800	BAu-4	.003 Foil	82 Au 18 Ni
12-5	.1098	.1233	.1104	.1225	1,2,3	16740	71630	-300	Plated	1800	BAu-4	.003 Foil	82 Au 18 Ni

* Accurate measurement of area not obtained on these surfaces

** Stress calculation not provided for these specimens

TABLE III - SUMMARY OF BRAZE ALLOY DOUBLE SHEAR SPECIMEN TEST RESULTS GIVING AVERAGED VALUES AT ROOM AND -300 F TEMPERATURES

Braze Material	Braze Composition	Type	Surface Condition	Test Temp F	Braze Temp F	Averaged Stress, psi
BAg-21	63 Ag 28.5 Cu 6 Sn 2.5 Ni	.003 Foil	Unplated	Room	1500	21841
BAg-21	63 Ag 28.5 Cu 6 Sn 2.5 Ni	.003 Foil	Unplated	-300	1500	25424
BAg-21	63 Ag 28.5 Cu 6 Sn 2.5 Ni	.003 Foil	Plated	Room	1500	38458
BAg-21	63 Ag 28.5 Cu 6 Sn 2.5 Ni	.003 Foil	Plated	-300	1500	48288
BAg-13A	56 Ag 42 Cu 2 Ni	.003 Foil	Unplated	Room	1675	27533
BAg-13A	56 Ag 42 Cu 2 Ni	.003 Foil	Unplated	-300	1675	37784
BAg-13A	56 Ag 42 Cu 2 Ni	.003 Foil	Plated	Room	1675	30848
BAg-13A	56 Ag 42 Cu 2 Ni	.003 Foil	Plated	-300	1675	41641
BAg-8 (BT)	72 Ag 28 Cu	.003 Foil	Unplated	Room	1550	17961
BAg-8 (BT)	72 Ag 28 Cu	.003 Foil	Unplated	-300	1550	22723
BAg-8 (BT)	72 Ag 28 Cu	.003 Foil	Plated	Room	1500	29011
BAg-8 (BT)	72 Ag 28 Cu	.003 Foil	Plated	-300	1500	40813
Engaloy 491	58 Ag 32 Cu 10 Pd	Powder	Unplated	Room	1675	20465
Engaloy 491	58 Ag 32 Cu 10 Pd	Powder	Unplated	-300	1675	29902
Engaloy 491	58 Ag 32 Cu 10 Pd	Powder	Plated	Room	1610	42810
Engaloy 491	58 Ag 32 Cu 10 Pd	Powder	Plated	-300	1610	53562
BAu-4	82 Au 18 Ni	.003 Foil	Unplated	Room	1800	61928
BAu-4	82 Au 18 Ni	.003 Foil	Unplated	-300	1800	81524
BAu-4	82 Au 18 Ni	.003 Foil	Plated	Room	1800	58625
BAu-4	82 Au 18 Ni	.003 Foil	Plated	-300	1800	75922

TABLE IV - SUMMARY OF BRAZE ALLOY SINGLE SHEAR SPECIMEN TEST RESULTS GIVING AVERAGED VALUES AT ROOM AND -300°F TEMPERATURES

Braze Material	Braze Composition	Type	Surface Condition	Test Temp °F	Braze Temp °F	Averaged Stress, psi
BAg-21	63 Ag 28.5 Cu 6 Sn 2.5 Ni	.003 Foil	Unplated	Room	1500	10575
BAg-21	63 Ag 28.5 Cu 6 Sn 2.5 Ni	.003 Foil	Unplated	-300	1500	9658
BAg-21	63 Ag 28.5 Cu 6 Sn 2.5 Ni	.003 Foil	Plated	Room	1500	16334
BAg-21	63 Ag 28.5 Cu 6 Sn 2.5 Ni	.003 Foil	Plated	-300	1500	17397
BAg-13A	56 Ag 42 Cu 2 Ni	.003 Foil	Unplated	Room	1675	11618
BAg-13A	56 Ag 42 Cu 2 Ni	.003 Foil	Unplated	-300	1675	14673
BAg-13A	56 Ag 42 Cu 2 Ni	.003 Foil	Plated	Room	1675	21192
BAg-13A	56 Ag 42 Cu 2 Ni	.003 Foil	Plated	-300	1675	27362
BAg-8 (BT)	72 Ag 28 Cu	.003 Foil	Unplated	Room	1550	11040
BAg-8 (BT)	72 Ag 28 Cu	.003 Foil	Unplated	-300	1550	10428
BAg-8 (BT)	72 Ag 28 Cu	.003 Foil	Plated	Room	1500	18875
BAg-8 (BT)	72 Ag 28 Cu	.003 Foil	Plated	-300	1500	23332
Engaloy 491	58 Ag 32 Cu 10 Pd	Powder	Unplated	Room	1675	18616
Engaloy 491	58 Ag 32 Cu 10 Pd	Powder	Unplated	-300	1675	25112
Engaloy 491	58 Ag 32 Cu 10 Pd	Powder	Plated	Room	1610	19289
Engaloy 491	58 Ag 32 Cu 10 Pd	Powder	Plated	-300	1610	24177
BAu-4	82 Au 18 Ni	.003 Foil	Unplated	Room	1800	40351
BAu-4	82 Au 18 Ni	.003 Foil	Unplated	-300	1800	45450
BAu-4	82 Au 18 Ni	.003 Foil	Plated	Room	1800	29382
BAu-4	82 Au 18 Ni	.003 Foil	Plated	-300	1800	35313

TABLE IV - SUMMARY OF BRAZE ALLOY SINGLE SHEAR SPECIMEN TEST RESULTS GIVING AVERAGED VALUES AT ROOM AND -300°F TEMPERATURES

Braze Material	Braze Composition	Type	Surface Condition	Test Temp °F	Braze Temp °F	Averaged Stress, psi
BAg-21	63 Ag 28.5 Cu 6 Sn 2.5 Ni	.003 Foil	Unplated	Room	1500	10575
BAg-21	63 Ag 28.5 Cu 6 Sn 2.5 Ni	.003 Foil	Unplated	-300	1500	9658
BAg-21	63 Ag 28.5 Cu 6 Sn 2.5 Ni	.003 Foil	Plated	Room	1500	16334
BAg-21	63 Ag 28.5 Cu 6 Sn 2.5 Ni	.003 Foil	Plated	-300	1500	17397
BAg-13A	56 Ag 42 Cu 2 Ni	.003 Foil	Unplated	Room	1675	11618
BAg-13A	56 Ag 42 Cu 2 Ni	.003 Foil	Unplated	-300	1675	14673
BAg-13A	56 Ag 42 Cu 2 Ni	.003 Foil	Plated	Room	1675	21192
BAg-13A	56 Ag 42 Cu 2 Ni	.003 Foil	Plated	-300	1675	27362
BAg-8 (BT)	72 Ag 28 Cu	.003 Foil	Unplated	Room	1550	11040
BAg-8 (BT)	72 Ag 28 Cu	.003 Foil	Unplated	-300	1550	10428
BAg-8 (BT)	72 Ag 28 Cu	.003 Foil	Plated	Room	1500	18875
BAg-8 (BT)	72 Ag 28 Cu	.003 Foil	Plated	-300	1500	23332
Engaloy 491	58 Ag 32 Cu 10 Pd	Powder	Unplated	Room	1675	18616
Engaloy 491	58 Ag 32 Cu 10 Pd	Powder	Unplated	-300	1675	25112
Engaloy 491	58 Ag 32 Cu 10 Pd	Powder	Plated	Room	1610	19289
Engaloy 491	58 Ag 32 Cu 10 Pd	Powder	Plated	-300	1610	24177
BAu-4	82 Au 18 Ni	.003 Foil	Unplated	Room	1800	40351
BAu-4	82 Au 18 Ni	.003 Foil	Unplated	-300	1800	45450
BAu-4	82 Au 18 Ni	.003 Foil	Plated	Room	1800	29382
BAu-4	82 Au 18 Ni	.003 Foil	Plated	-300	1800	35313

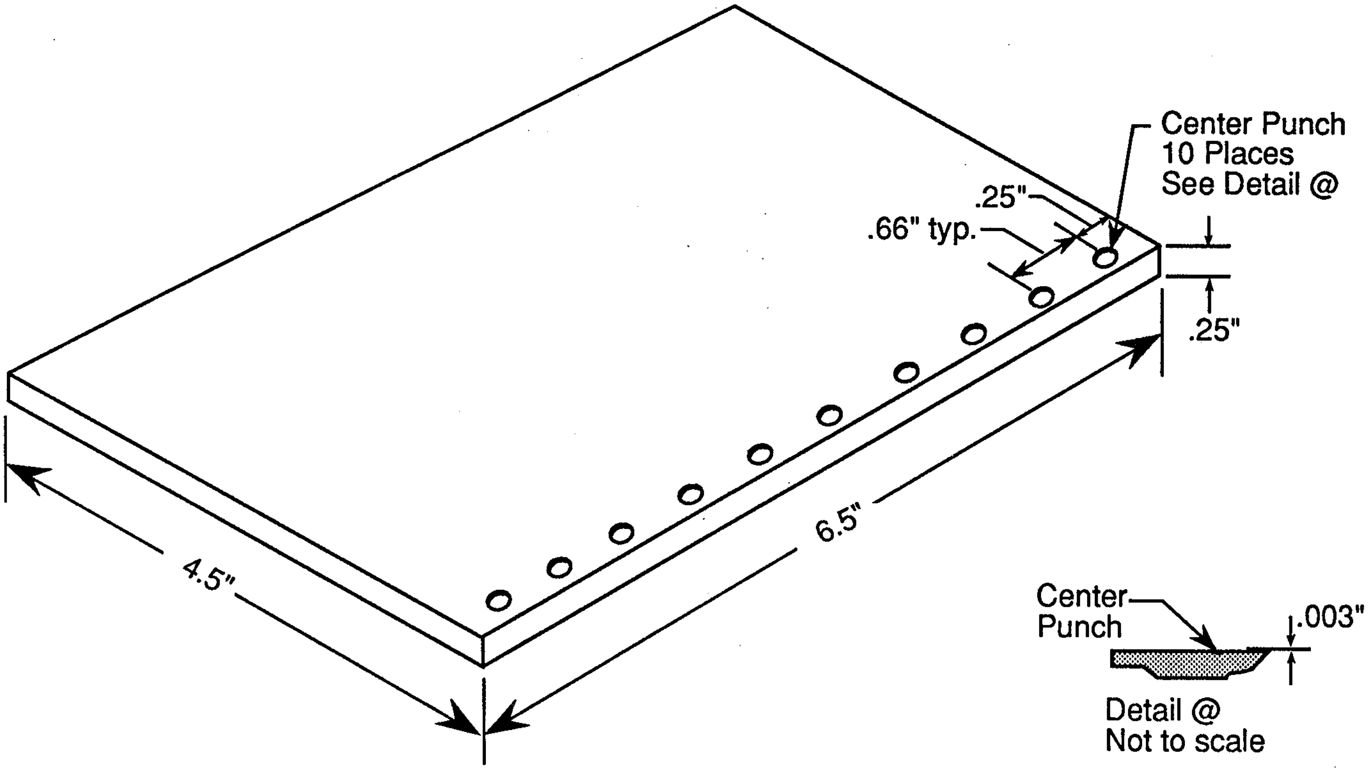

PLATE
2 Required per assembly

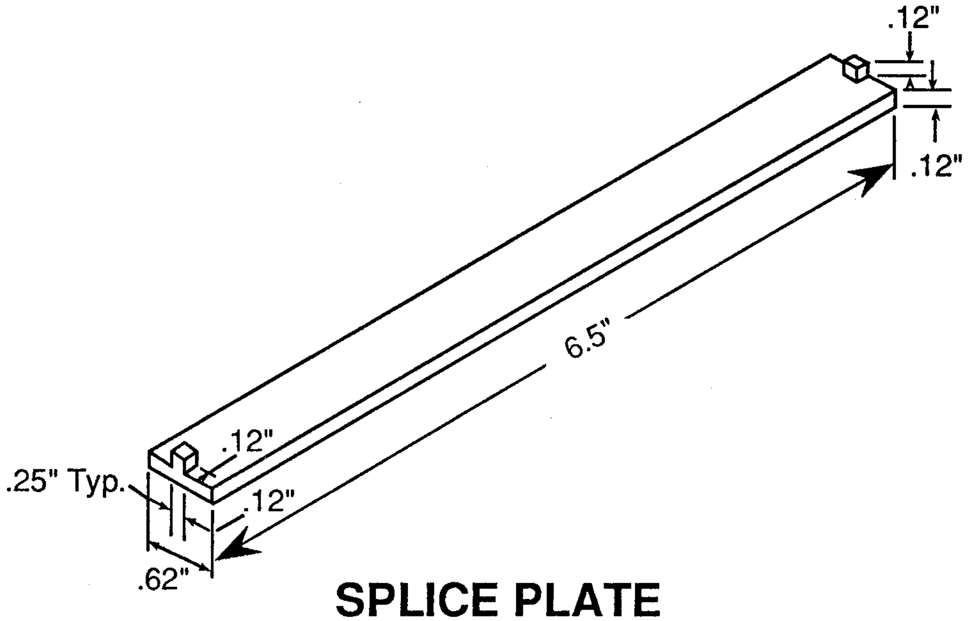

SPLICE PLATE
2 Required - Double shear
1 Required - Single shear

Figure 1 - Plate Geometry for Shear Specimen

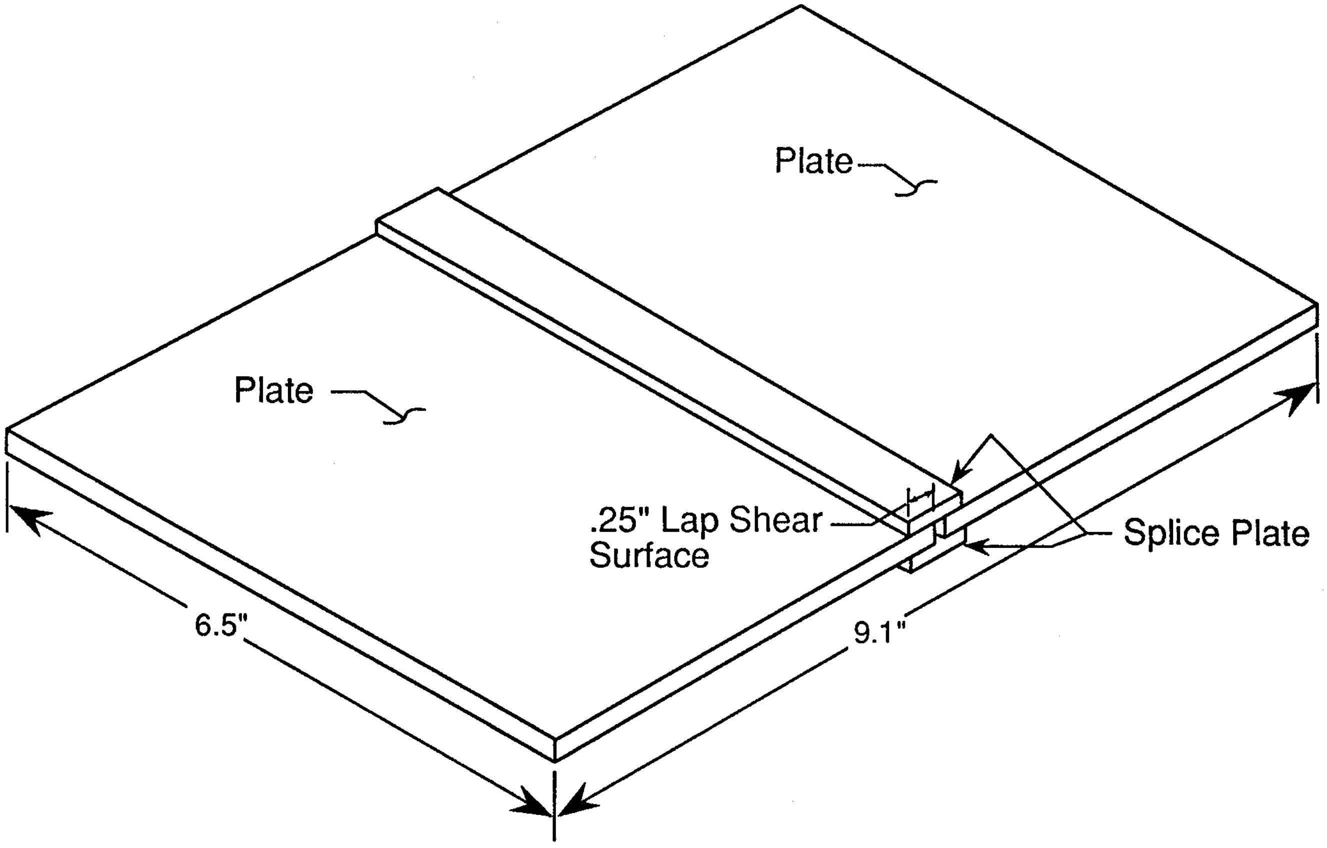

ASSEMBLY

Figure 2 - Structural Assembly for Shear Specimen

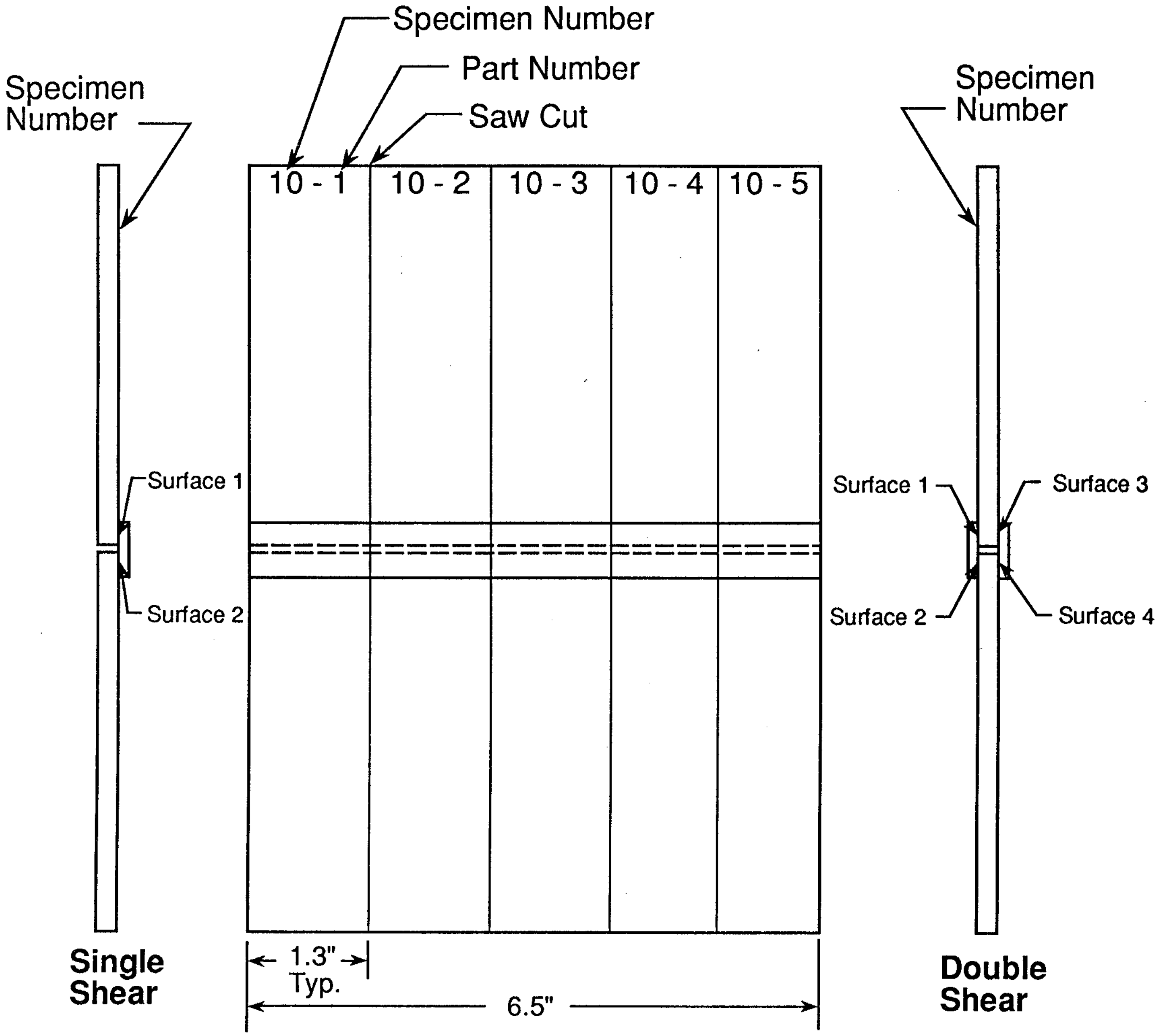

BRAZED ASSEMBLY Layout

Figure 3 - Illustration of Brazed Assembly Used for Shear Specimens

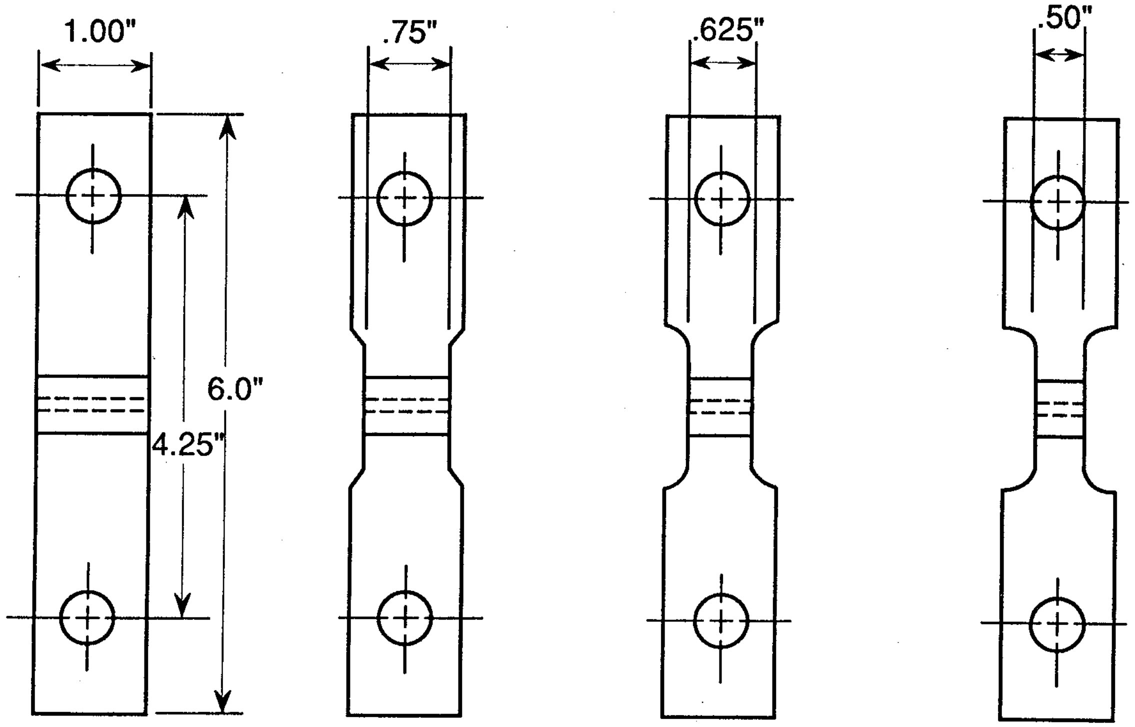

Single Shear

Double Shear

Double Shear Room Temp. BAU-4 Braze Material

Double Shear Cryo Temp. BAU-4 Braze Material

SHEAR SPECIMENS

Figure 4 - Various Shear Specimens Used for Braze Alloy Tests

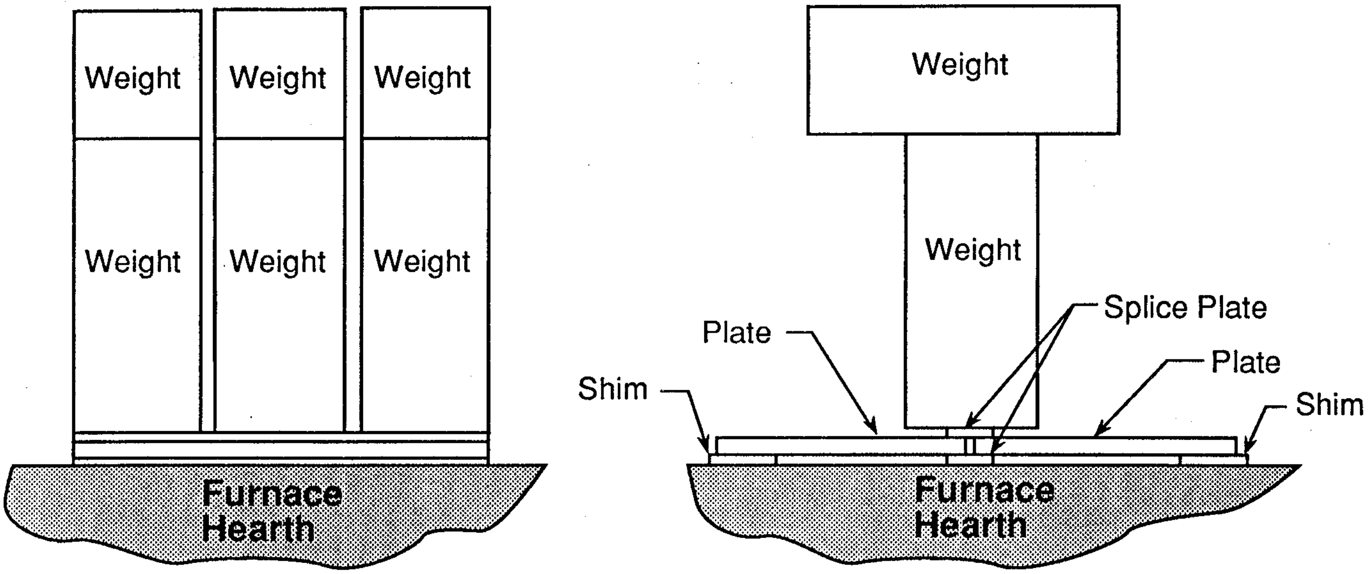

FRONT VIEW

SIDE VIEW

Figure 5 - Illustration of Placement of Braze Specimens in Furnace

ORIGINAL PAGE
BLACK AND WHITE PHOTOGRAPH

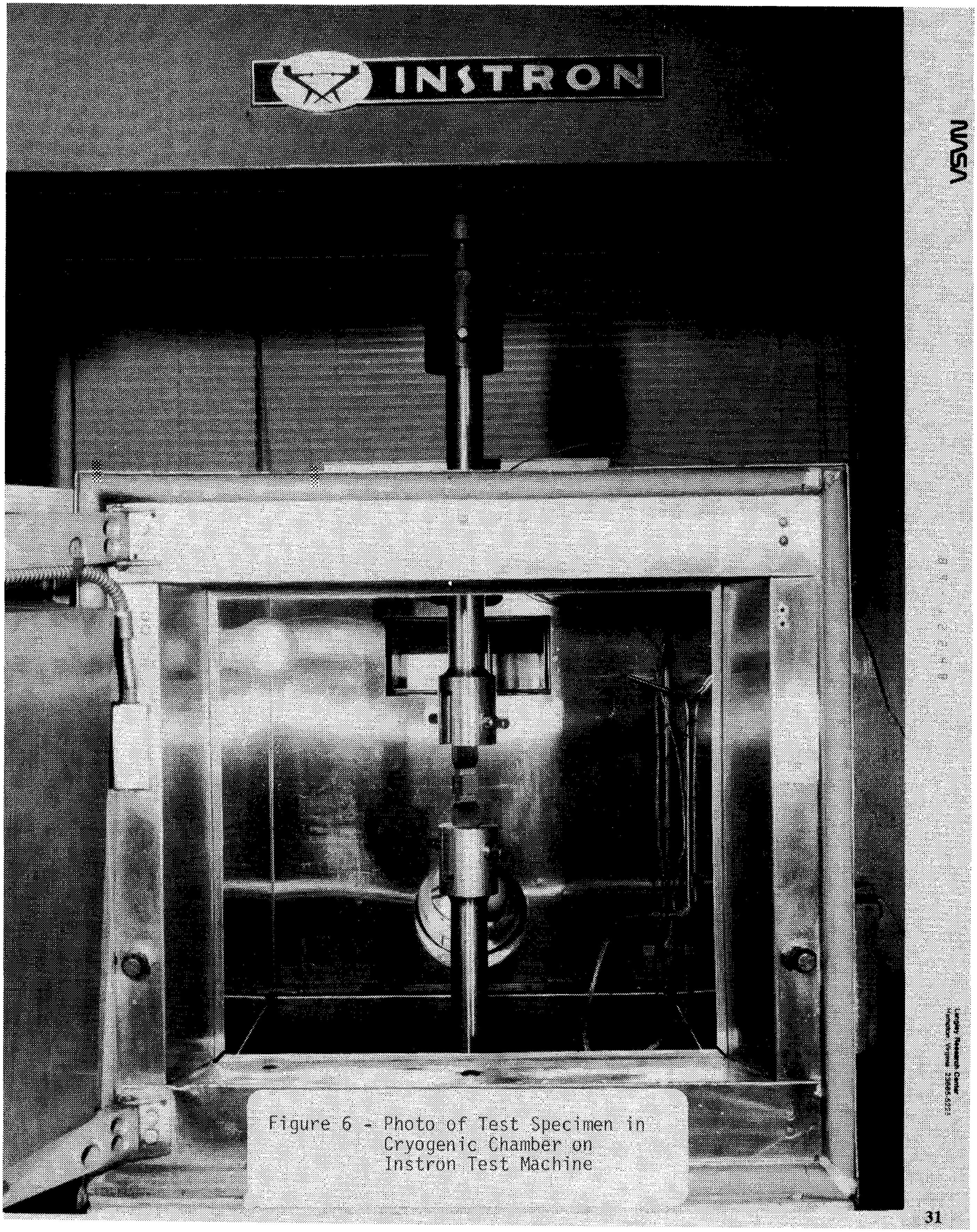

Figure 6 - Photo of Test Specimen in Cryogenic Chamber on Instron Test Machine

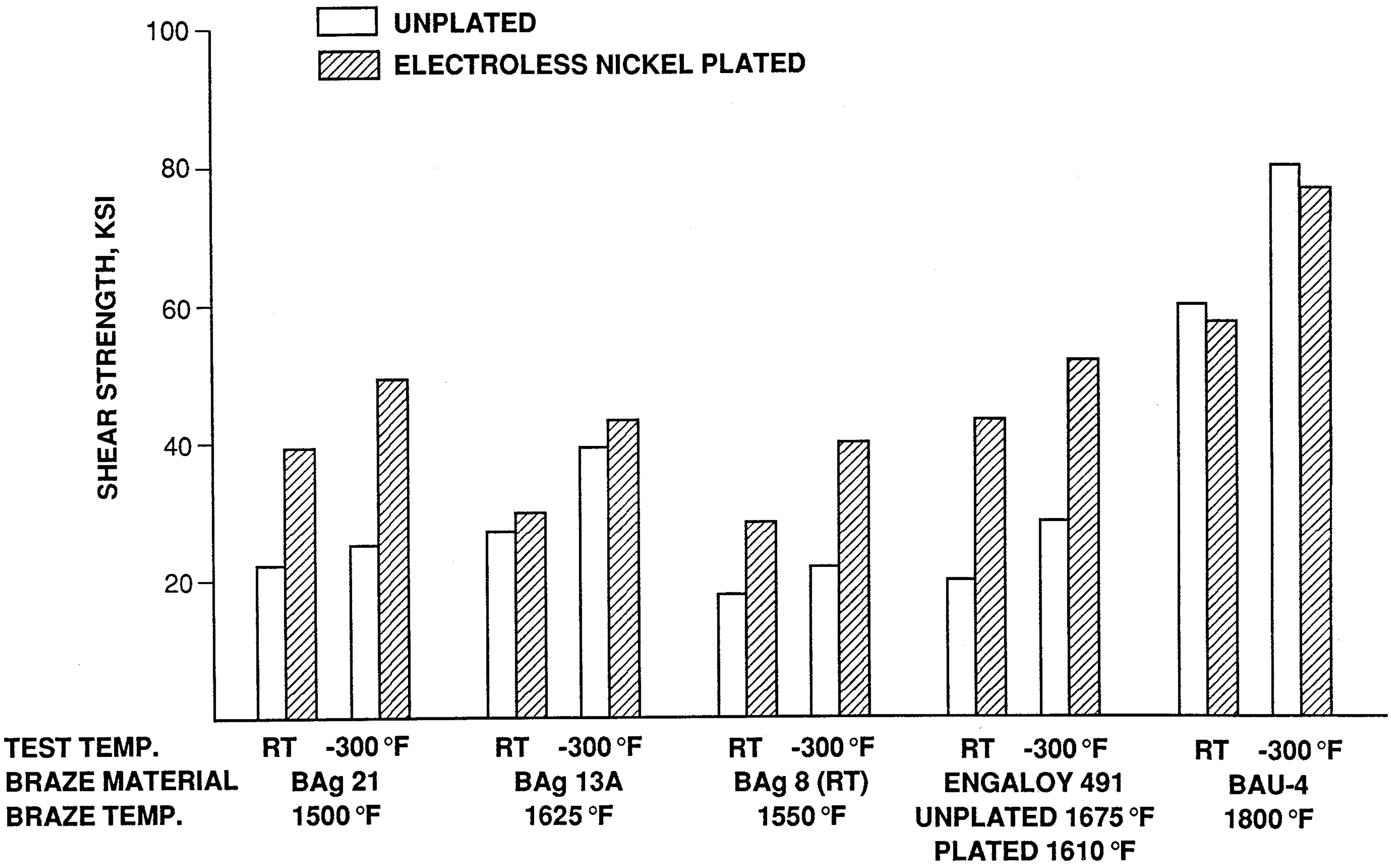

Figure 7 - Shear Strength Properties for 18 Ni Grade 200 Steel Braze Specimens

ORIGINAL PAGE
BLACK AND WHITE PHOTOGRAPH

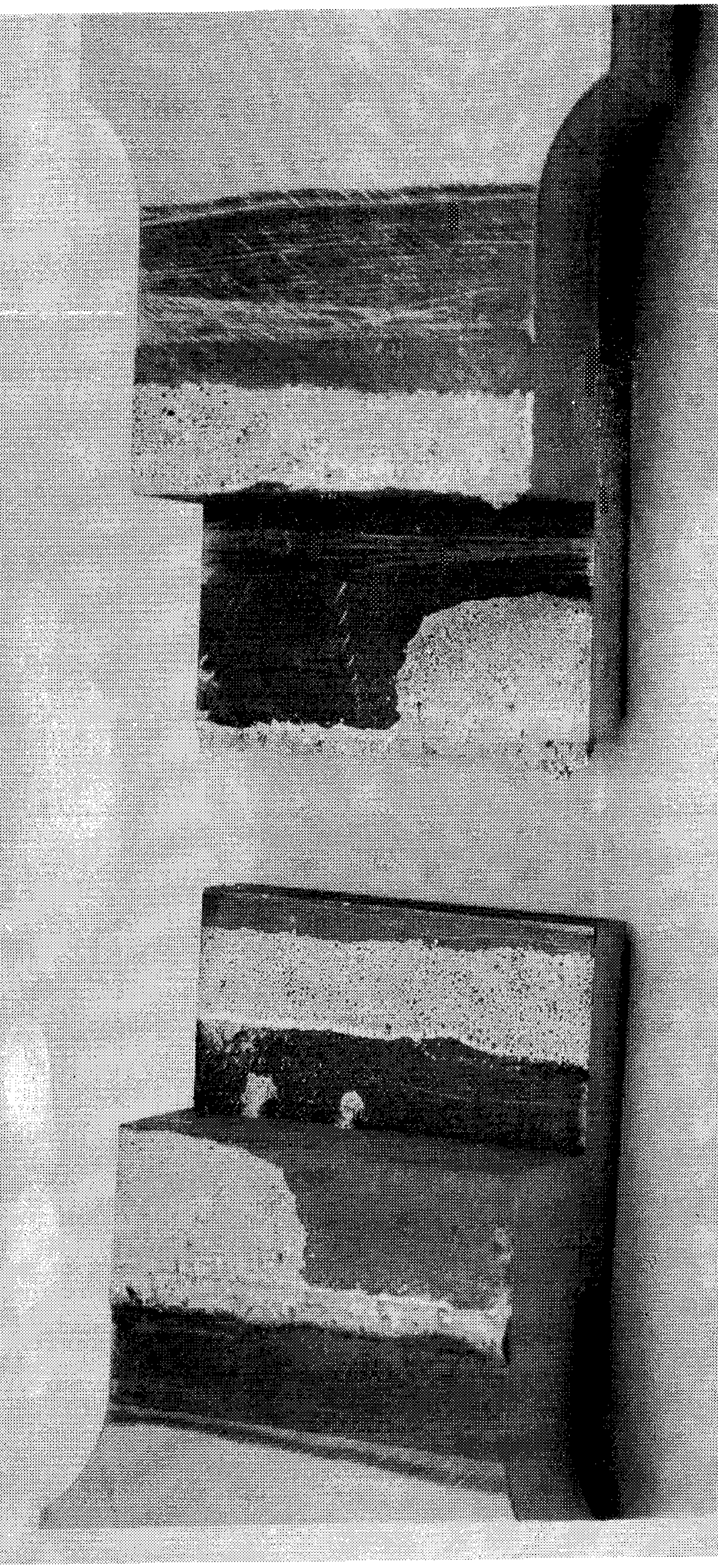

NASA
L-86-7527

Figure 8 - Failure Surfaces for
Specimen Number 10-2

ORIGINAL PAGE
BLACK AND WHITE PHOTOGRAPH

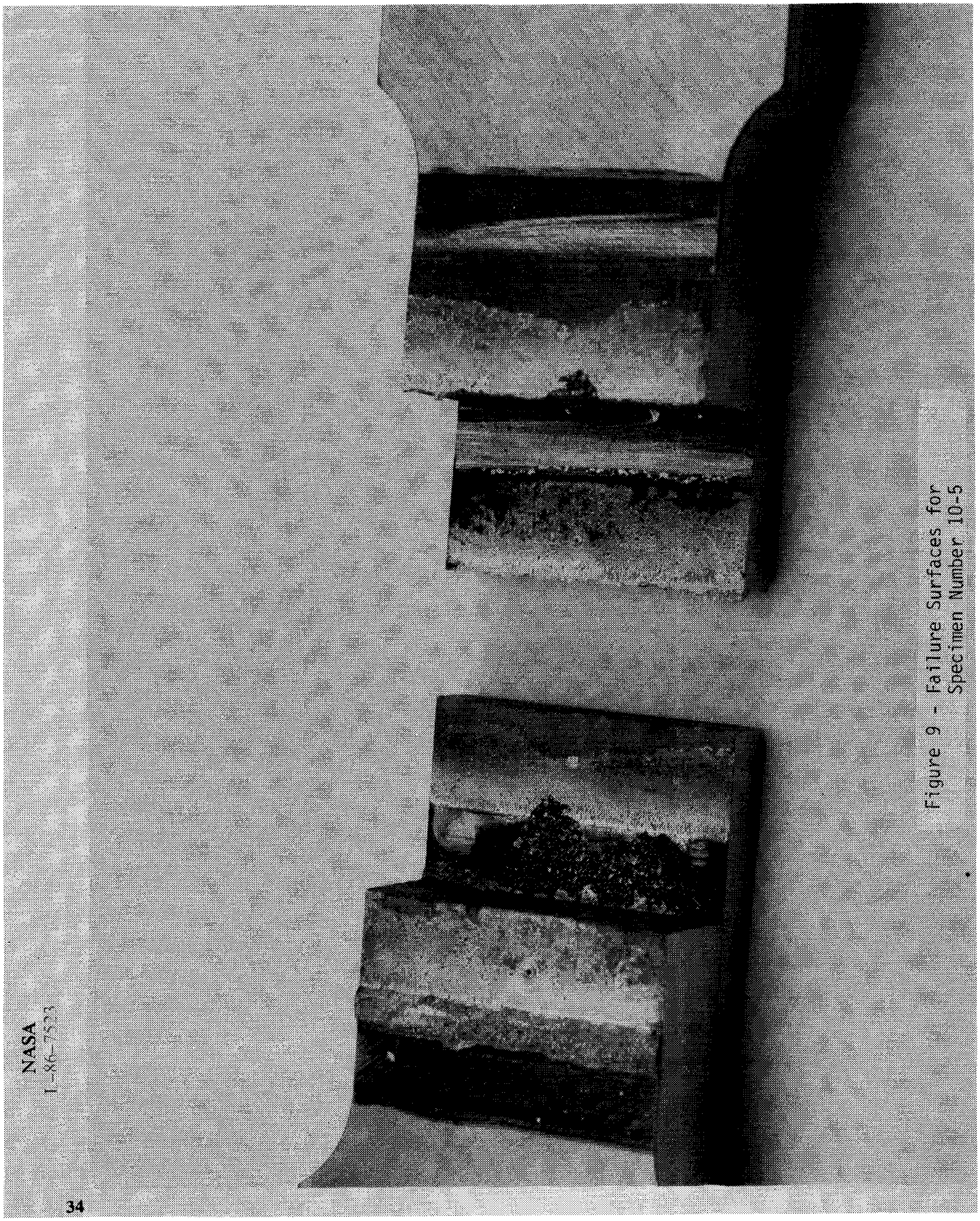

Figure 9 - Failure Surfaces for Specimen Number 10-5

ORIGINAL PAGE
BLACK AND WHITE PHOTOGRAPH

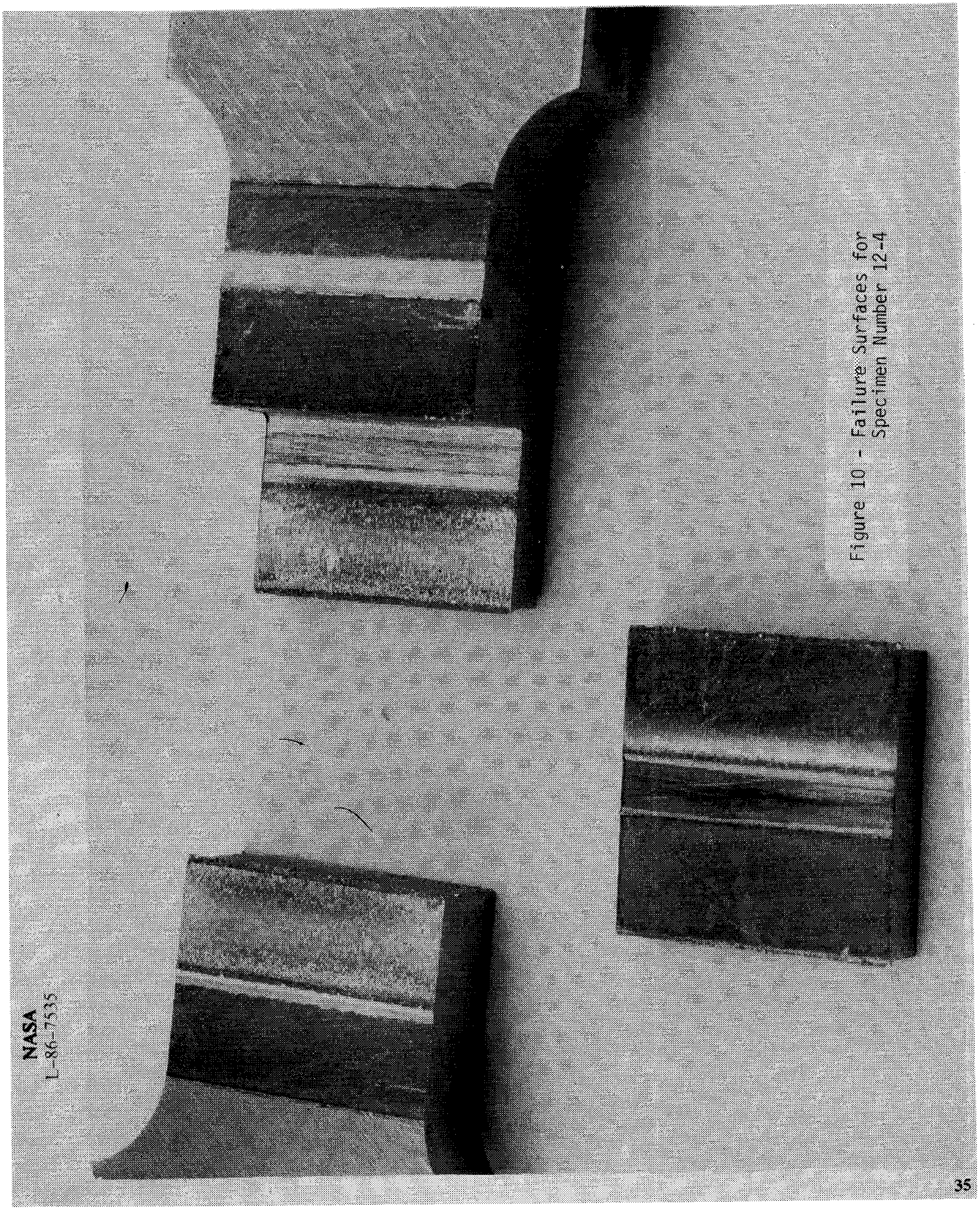

Figure 10 - Failure Surfaces for Specimen Number 12-4

ORIGINAL PAGE
BLACK AND WHITE PHOTOGRAPH

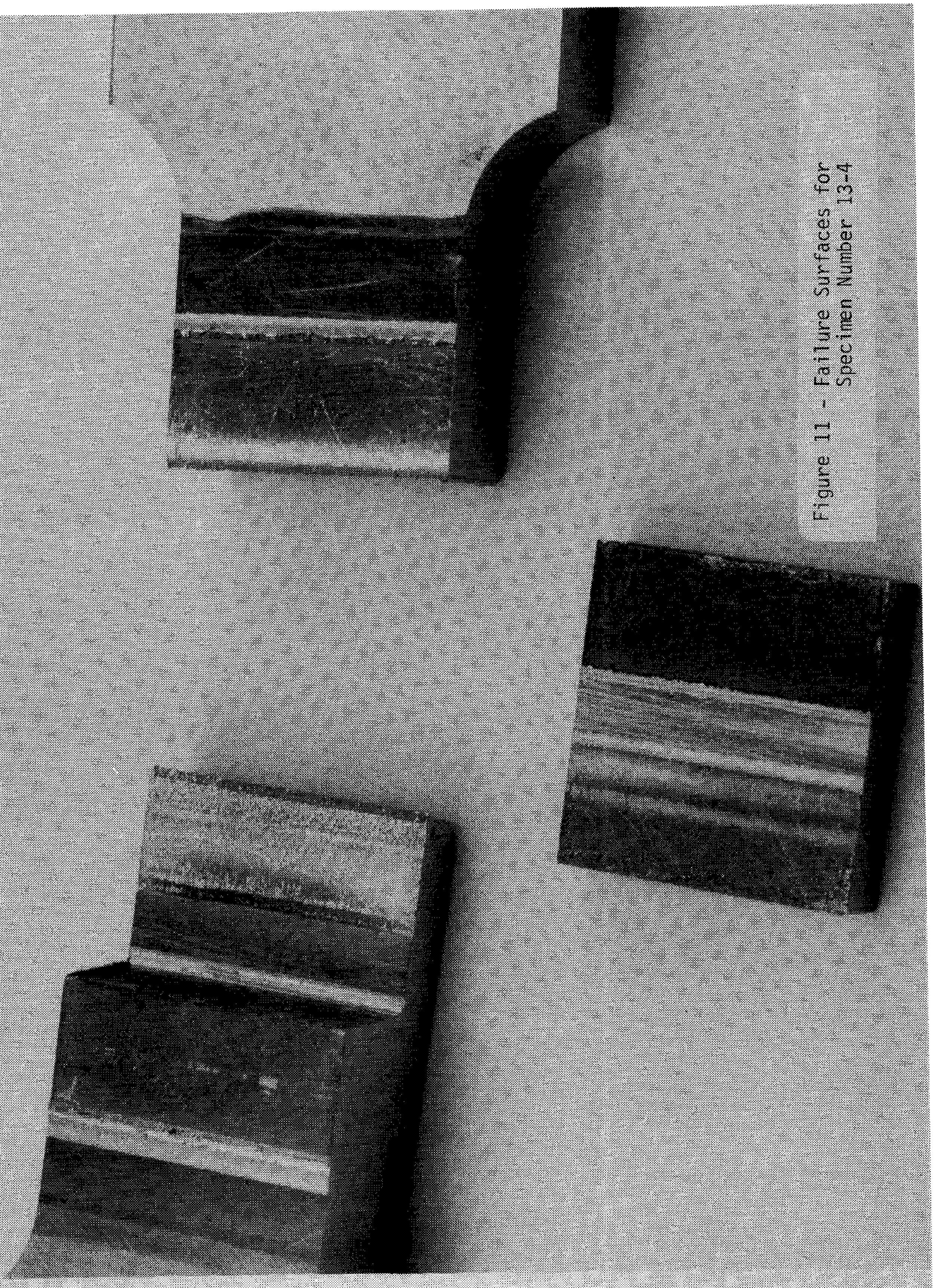

Figure 11 - Failure Surfaces for Specimen Number 13-4

NASA
L-86-7518

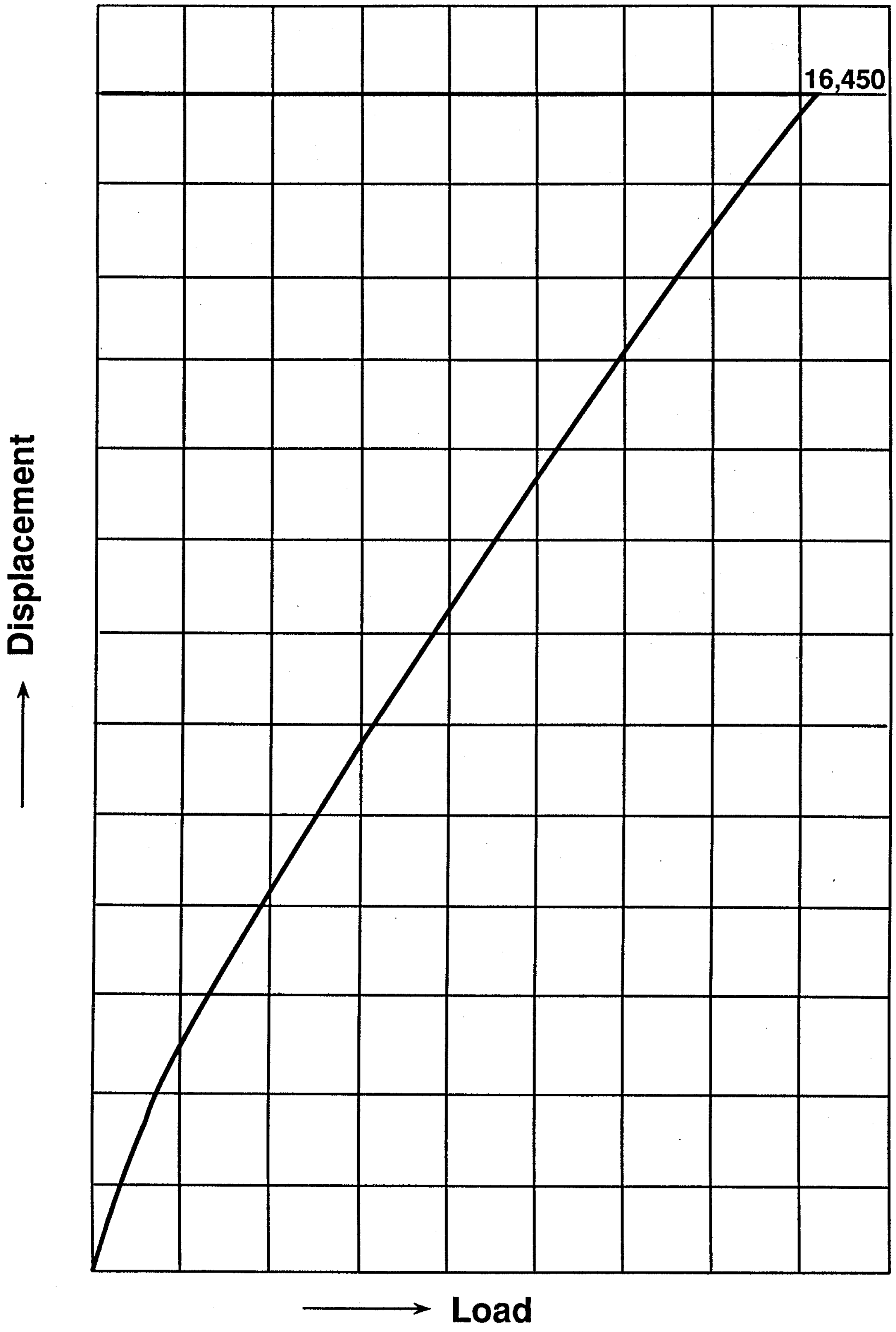

Figure 12 - Example of Displacement Versus Load for Double Braze Shear Specimen 12-4 @ R.T.

ORIGINAL PAGE
BLACK AND WHITE PHOTOGRAPH

NASA
L-85-1887

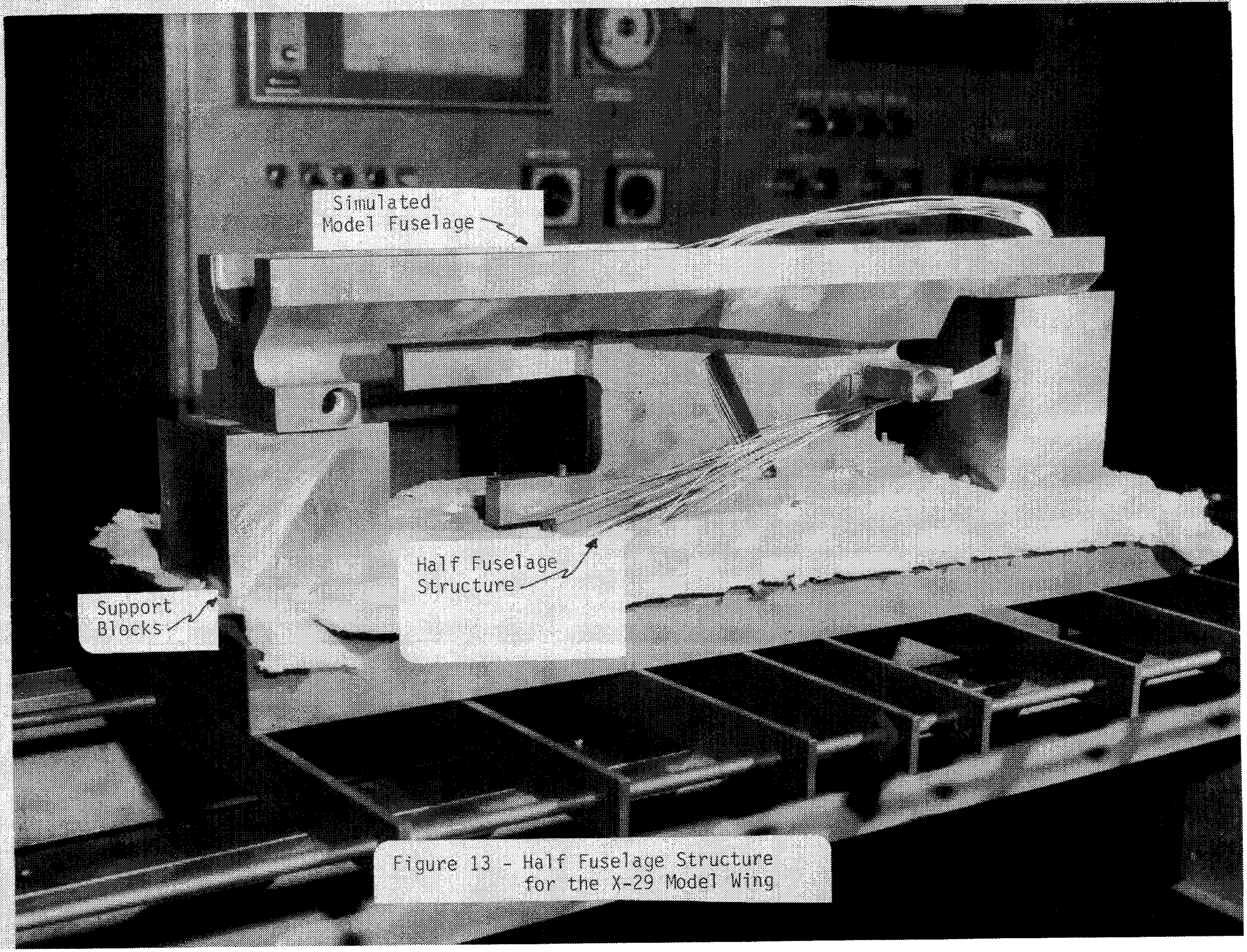

Figure 13 - Half Fuselage Structure for the X-29 Model Wing

ORIGINAL PAGE
BLACK AND WHITE PHOTOGRAPH

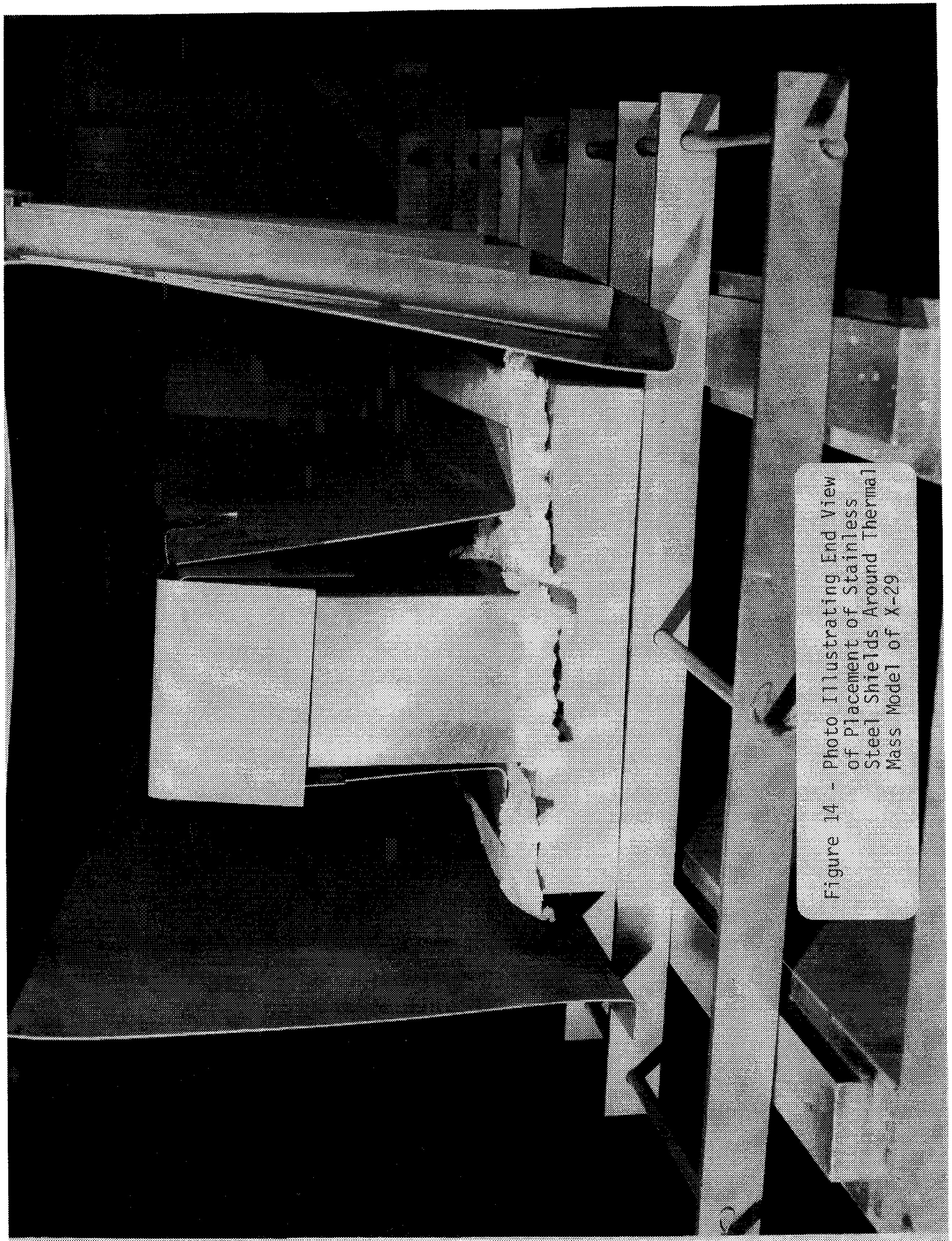

Figure 14 - Photo Illustrating End View of Placement of Stainless Steel Shields Around Thermal Mass Model of X-29

ORIGINAL PAGE
BLACK AND WHITE PHOTOGRAPH

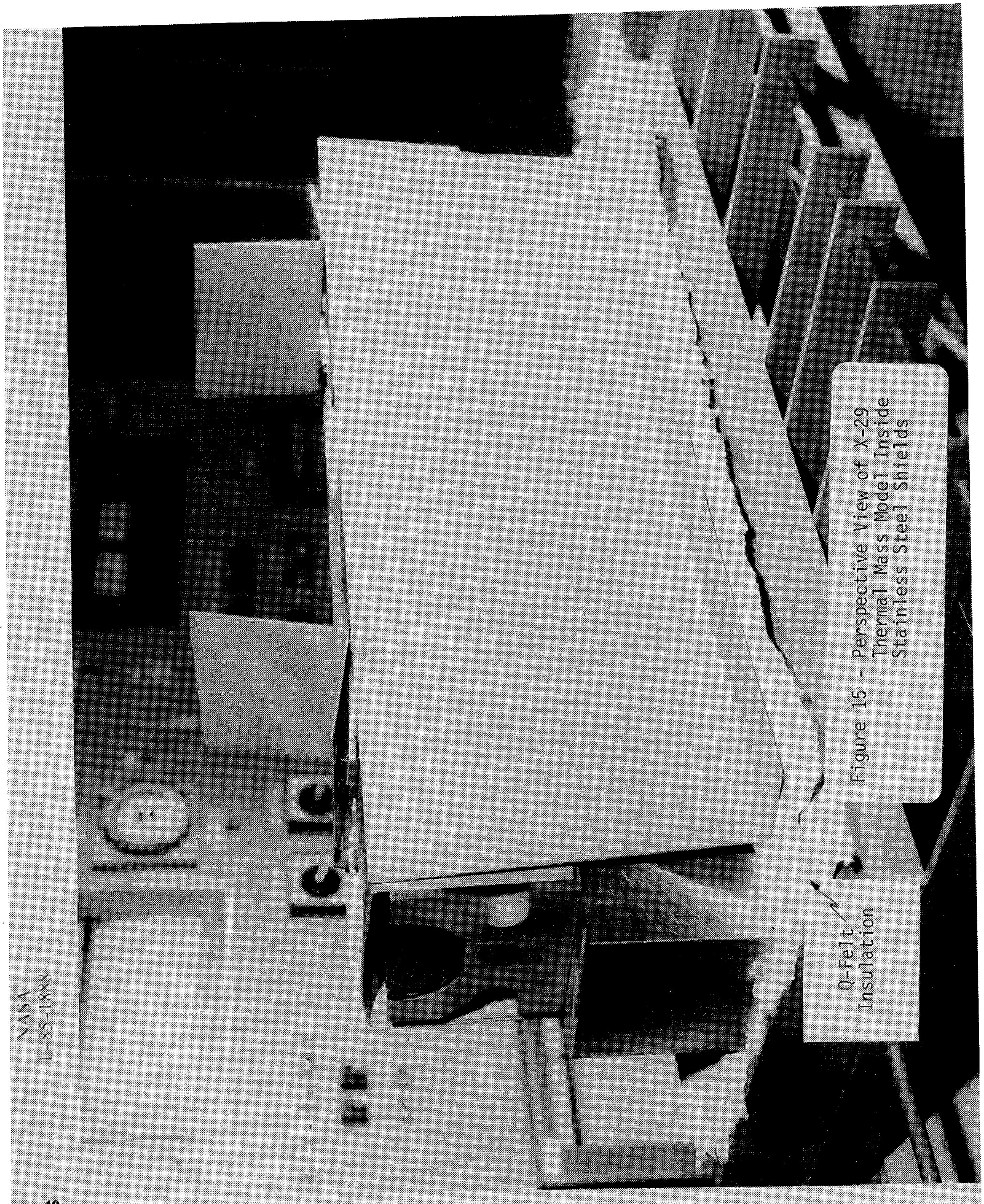

Figure 15 - Perspective View of X-29 Thermal Mass Model Inside Stainless Steel Shields

ORIGINAL PAGE
BLACK AND WHITE PHOTOGRAPH

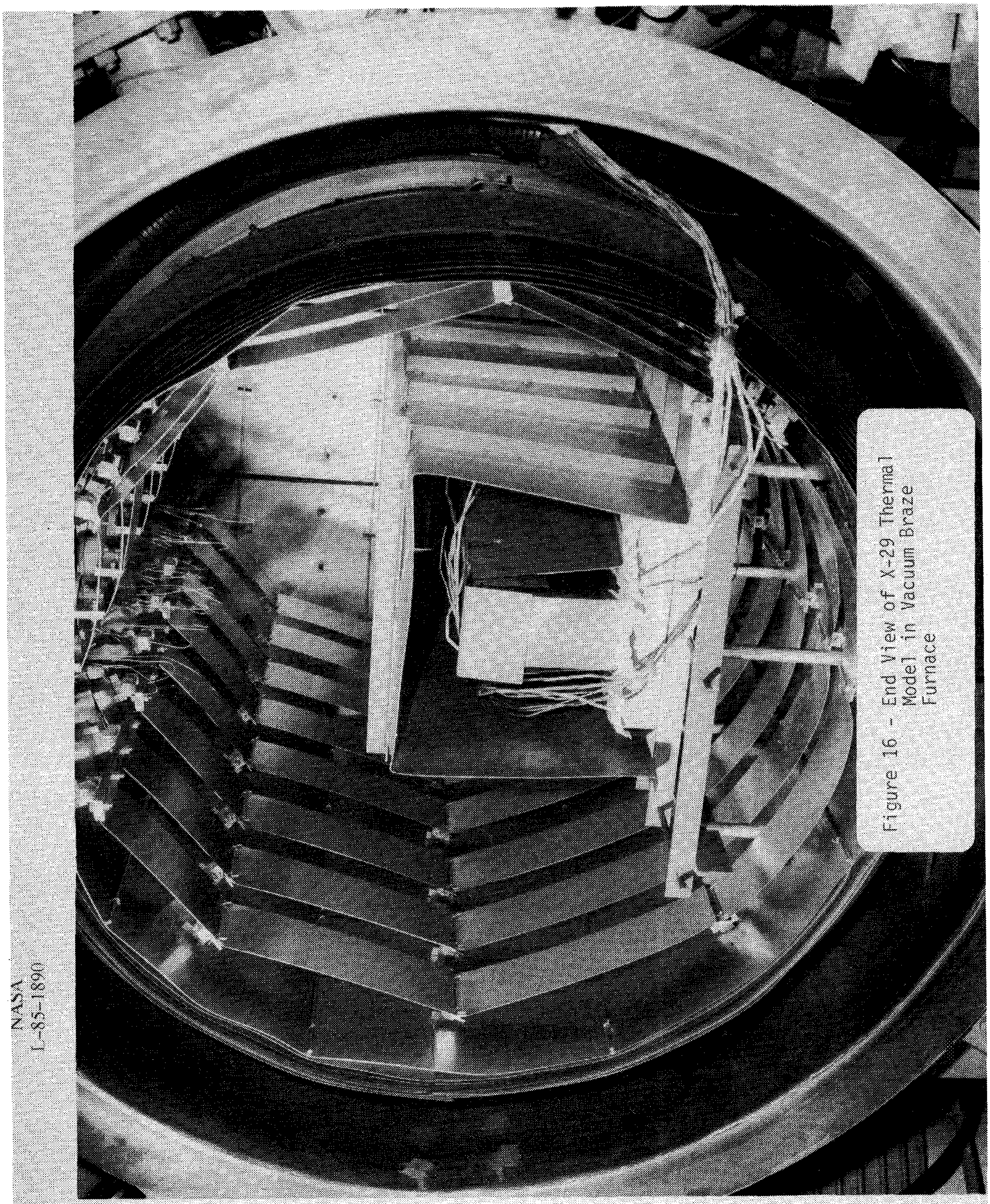

Figure 16 - End View of X-29 Thermal Model in Vacuum Braze Furnace

NASA
L-85-1890

NASA
L-85-1891

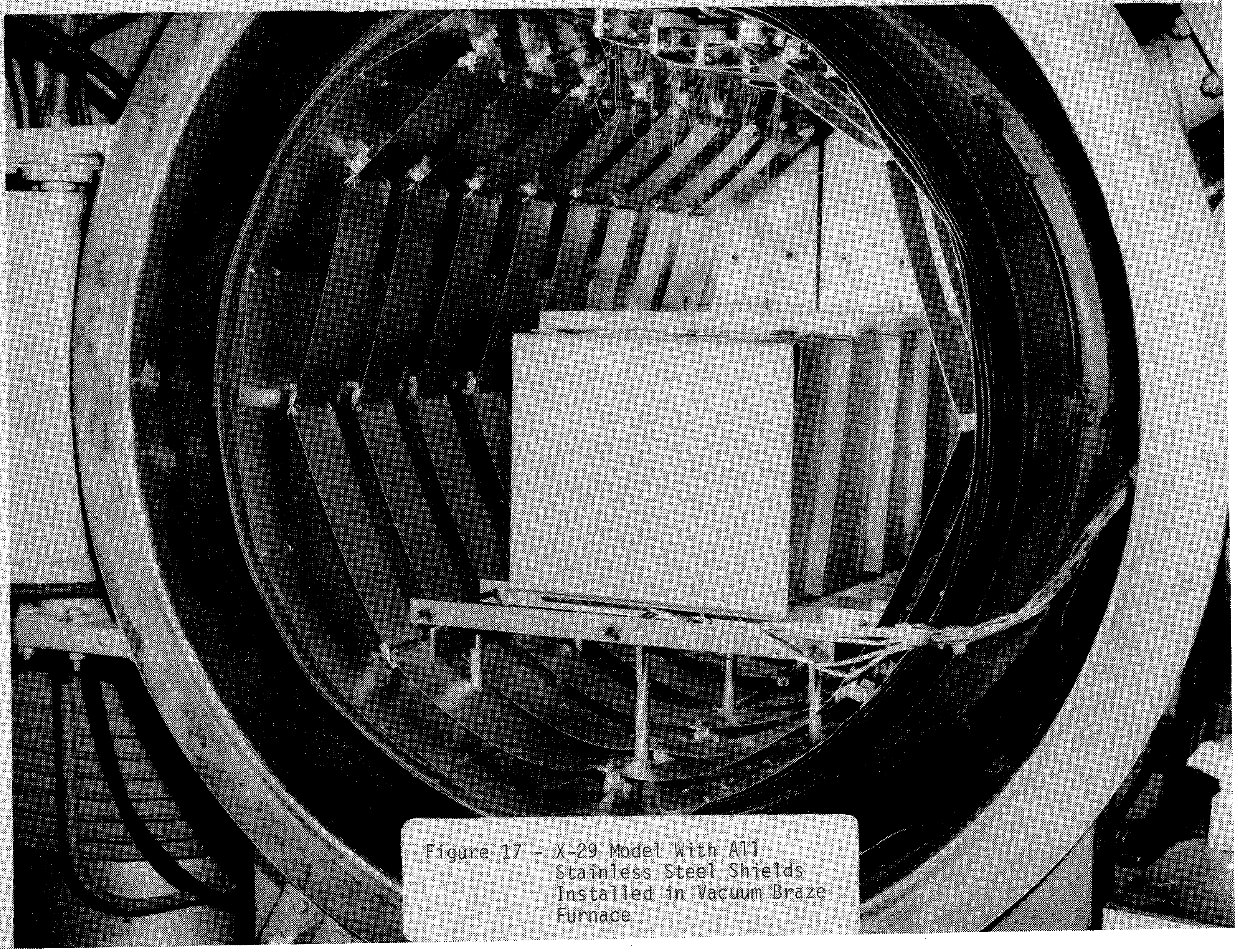

Figure 17 - X-29 Model With All Stainless Steel Shields Installed in Vacuum Braze Furnace

National Aeronautics and Space Administration

Report Documentation Page

1. Report No. NASA TM-104075	2. Government Accession No.	3. Recipient's Catalog No.

4. Title and Subtitle

Braze Alloy Process and Strength Characterization Studies for 18 Nickel Grade 200 Maraging Steel With Application to Wind Tunnel Models

5. Report Date

May 1991

6. Performing Organization Code

7. Author(s)

James F. Bradshaw
Paul G. Sandefur, Jr.
Clarence P. Young, Jr.

8. Performing Organization Report No.

10. Work Unit No.

505-59-85-01

9. Performing Organization Name and Address

NASA Langley Research Center
Hampton, VA 23665-5225

11. Contract or Grant No.

12. Sponsoring Agency Name and Address

National Aeronautics and Space Administration
Washington, DC 20546-0001

13. Type of Report and Period Covered

Technical Memorandum
1990 - 1991

14. Sponsoring Agency Code

15. Supplementary Notes

James Bradshaw: Langley Research Center, Hampton, Virginia.
Paul Sandefur: Lockheed Engineering & Sciences Company, Hampton, Virginia.
Clarence P. Young, Jr.: North Carolina State University, Raleigh, North Carolina.

16. Abstract

A comprehensive study of braze alloy selection process and strength characterization with application to wind tunnel models is presented. The applications for this study include the installation of stainless steel pressure tubing in model airfoil sections made of 18 Ni 200 grade maraging steel and the joining of wing structural components by brazing. Acceptable braze alloys for these applications are identified along with process, thermal braze cycle data, and thermal management procedures. Shear specimens are used to evaluate comparative shear strength properties for the various alloys at both room and cryogenic (-300°F) temperatures and include the effects of electroless nickel plating. Nickel plating was found to significantly enhance both the wetability and strength properties for the various braze alloys studied.

The data provided in this paper are provided for use in selecting braze alloys for use with 18 Ni grade 200 steel in the design of wind tunnel models to be tested in an ambient or cryogenic environment.

17. Key Words (Suggested by Author(s)) Wind tunnel models Braze process Braze alloys Braze strength properties	18. Distribution Statement Unclassified - Unlimited Subject Category 26

19. Security Classif. (of this report) Unclassified	20. Security Classif. (of this page) Unclassified	21. No. of pages 47	22. Price A03