IN-31-TM
33017
P.102

NSSDC/WDC-A-R&S 89-14

SPAN
Space Physics Analysis Network

Space Physics Analysis Network Node Directory (The Yellow Pages)

Fourth Edition

David J. Peters
Patricia L. Sisson
James L. Green
Valerie L. Thomas

August 1989

NSSDC NATIONAL SPACE SCIENCE DATA CENTER

(NASA-TM-105068) SPACE PHYSICS ANALYSIS NETWORK NODE DIRECTORY (THE YELLOW PAGES): FOURTH EDITION (NASA) 102 p CSCL 05A

N91-30983

Unclas

G3/81 0033017

NSSDC/WDC-A-R&S 89-14

SPACE PHYSICS ANALYSIS NETWORK NODE DIRECTORY (THE YELLOW PAGES)

Fourth Edition

David J. Peters
Patricia L. Sisson
Science Applications Research
Lanham, Maryland 20706

James L. Green
Valerie L. Thomas
National Space Science Data Center
NASA/Goddard Space Flight Center
Greenbelt, Maryland 20771

August 1989

Table of Contents

List of Figures

I. Introduction

The Space Physics Analysis Network, or SPAN, has grown exponentially over the course of the last few years. In this time period, the number of tail circuits to SPAN remote facilities has grown considerably, and the number of registered SPAN host computers is now well over 2500. SPAN is a component of the global DECnet Internet, which currently counts somewhere over 17,000 host computers.

The growth of SPAN from its implementation in 1981 to the present has created a need for users to acquire timely information about the network. In the past, information about the network was spread by word of mouth or through relevant publications. Since that time, it has become clear that the need for information on SPAN could only be satisfied by developing a central source for dissemination of such knowledge. The SPAN Network Information Center (SPAN_NIC), managed by the National Space Science Data Center (NSSDC), is an online facility which was developed to meet this need for SPAN-wide information. The remote node descriptive information in this document is not currently contained in the SPAN_NIC data base but will be incorporated in the near future. Access is also available to non-DECnet users over a variety of networks such as Telenet, the NASA Packet Switched System (NPSS), and the TCP/IP Internet (see the Appendix, *Accessing SPAN from Non-SPAN Nodes*).

The purpose of the *Space Physics Analysis Network Node Directory* is to serve as the "Yellow Pages" for SPAN node information. This document also provides key information concerning other computer networks connected to SPAN, nodes associated with each SPAN routing center, science discipline nodes, contacts for primary SPAN nodes, and SPAN reference information.

Section II, which covers DECnet Internetworking, discusses SPAN connections with other wide-area DECnet networks (many with thousands of nodes each). As many researchers have already realized, there are many nodes which can be reached by SPAN users besides those listed in this document. This is due to the excellent cooperation between the DECnet wide-area networks that have subscribed to the same security rules and have adopted the policy of noninterference for the benefit of all the institutions, thereby making the DECnet Internet possible.

Section III provides information about the nodes currently listed in the SPAN Network Information Center Online Data Base System. This chapter has the information listed both by the node name (NODEname) in alphabetic order (with the discipline of each node listed for those users who want to find someone in the same discipline) and by country and institution. This will be especially useful to researchers who need to know the appropriate node names to reach their colleagues. Section III contains valuable resource information to aid those interested in deciding whether or not to become a SPAN node.

The first part of Section IV is an index of all remote sites connected to US-SPAN and European-SPAN (E-SPAN) in alphabetic order. The second part of Section IV provides information on the SPAN tail circuits, i.e., those remote nodes connected directly to a SPAN routing center, which is the local point of contact for resolving SPAN-related problems. Section V contains reference material for those who wish to know more about SPAN.

Because of the rapid growth of SPAN, it is very likely that not all SPAN nodes are listed in this document. The SPAN *Yellow Pages* is reissued periodically. Therefore, it is very important that the remote node managers send their node information to SPAN_NIC. (See the *Introduction to SPAN*, Green *et al.*, 1987, for more specifics on the type of information that should be forwarded.)

II. Internetworking: The DECnet Internet

SPAN's usefulness to the scientific community has been greatly enhanced by engineering interconnections between existing wide-area DECnet networks (WANs) and SPAN (e.g., HEPNET, THEnet [formerly TEXnet], GEONET). The interconnection of these WANs required careful coordination between SPAN and HEPNET management to ensure the technical viability of the resulting "Internetwork." This coordination requires mutual agreements between the various network managers on node and area number assignments, DECnet circuit costs, interconnection gateways, and other characteristics that affect the viability and performance of the DECnet Internet. The current internetwork topology of SPAN in relation to other DECnet-based networks and multiprotocol WANs will be described below.

The current structure of United States SPAN (US-SPAN), as shown in Figure 1, is composed of an interconnected mesh topology. (See Peters, 1986.) Each star has a SPAN routing center as its nucleus. These routing centers are located at Goddard Space Flight Center (GSFC), Marshall Space Flight Center (MSFC), the Jet Propulsion Laboratory (JPL), and Johnson Space Center (JSC). A fifth U.S. routing center has recently been established at Ames Research Center (ARC). The routing centers are linked together by a set of redundant 56-kbps backbone circuits. This mesh topology allows high bandwidth circuits as well as backup, should any single SPAN routing center or 56-kbps line fail. From each routing center extend tail circuits (9.6-kbps minimum line speed) linking the remote institutions into the SPAN backbone. Figure 2 shows, in map form, all sites currently connected to SPAN.

As shown in Figure 1, US-SPAN is connected to European-SPAN (E-SPAN) via a 19.2 kbps (upgraded from 9.6 kbps in early 1988) dedicated line between the GSFC Routing Center and the European Space Operations Center (ESOC) in Darmstadt, Federal Republic of Germany. ESOC acts as an E-SPAN routing center, along with the European Space Research Institute (ESRIN) located in Frascati, Italy. Prior to 1987, the connection between US-SPAN and E-SPAN was established on a scheduled basis using GTE/Telenet and PSI X.25 circuits. X.25 connections from ESOC to the MSFC Routing Center and from ESOC to the GSFC Routing Center are now maintained as backups to the dedicated line, thus ensuring reliable 24-hour service between US-SPAN and E-SPAN.

Within E-SPAN, the backbone and tail circuits are composed of DECnet over a number of different media. E-SPAN consists of DECnet links over dedicated lines, as well as DECnet over both private and public X.25 packet switch networks. ESOC and ESRIN both support tail circuits to cooperating institutions within Europe, primarily over public packet switch networks (see Figure 3).

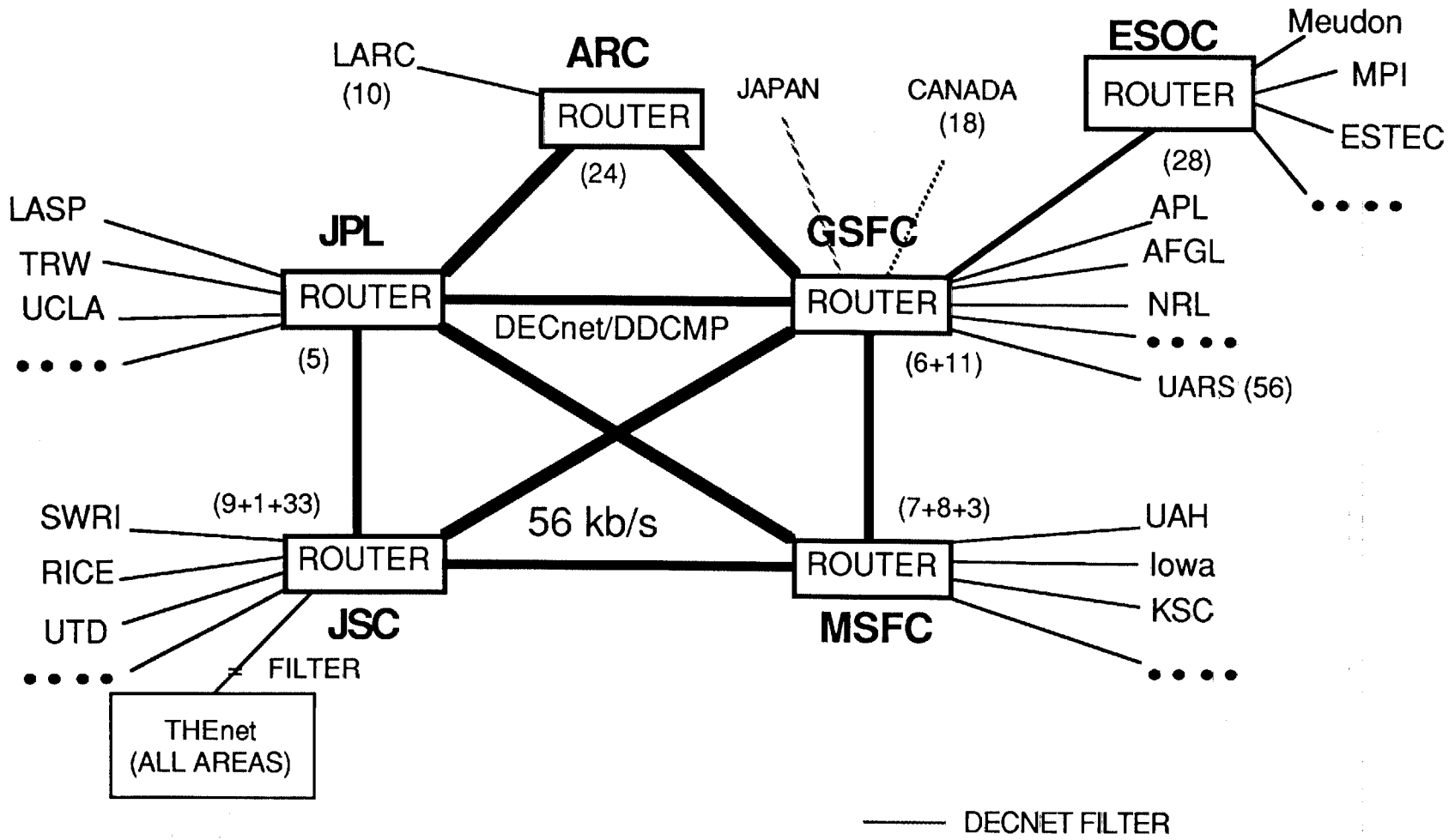

Figure 1. SPAN Backbone Configuration

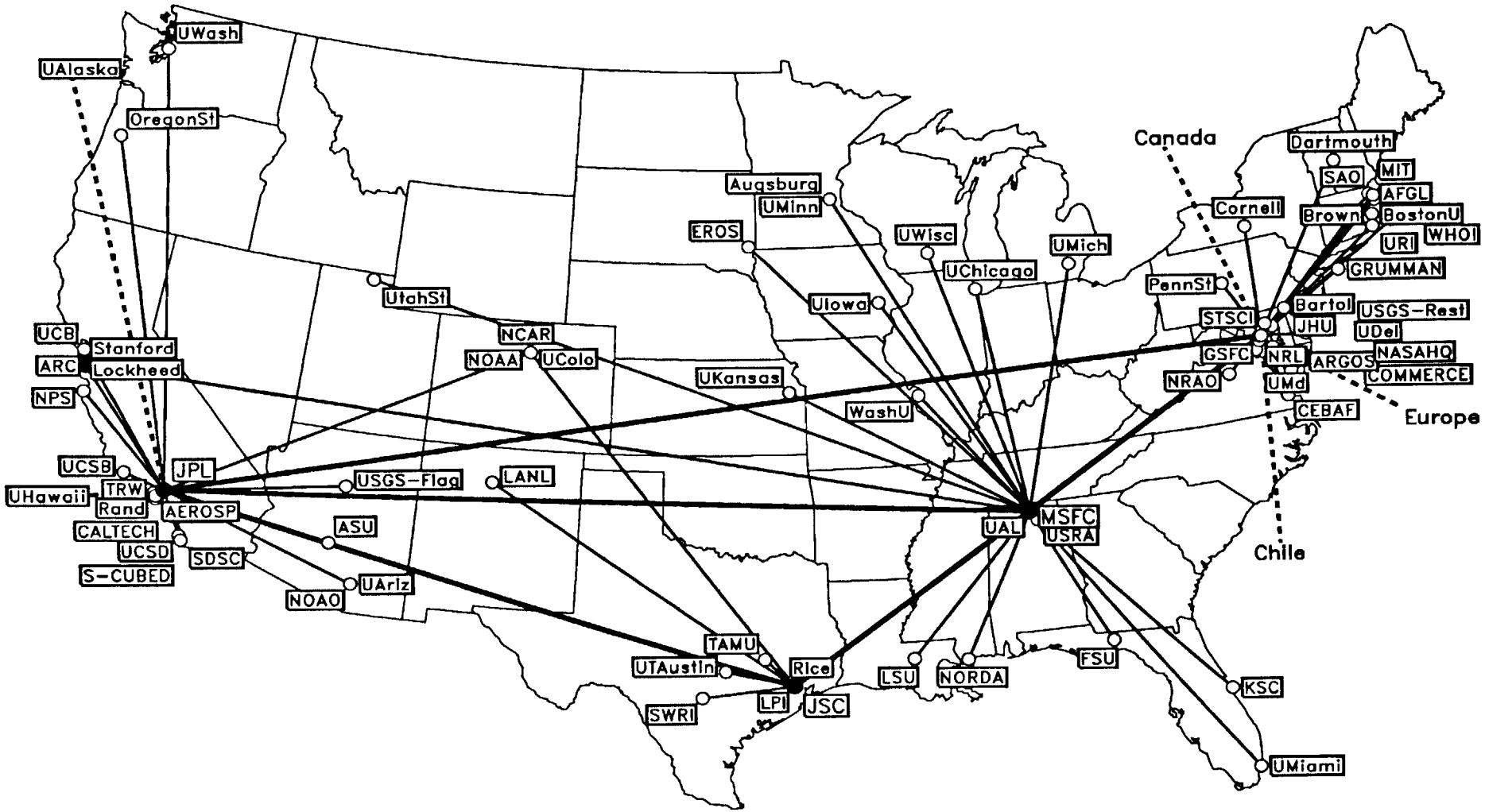

Figure 2. NSI/SPAN North American Sites

Prepared for: NASA Science Internet Project Office
by: Sterling Software, NAS2-11555
4/26/89

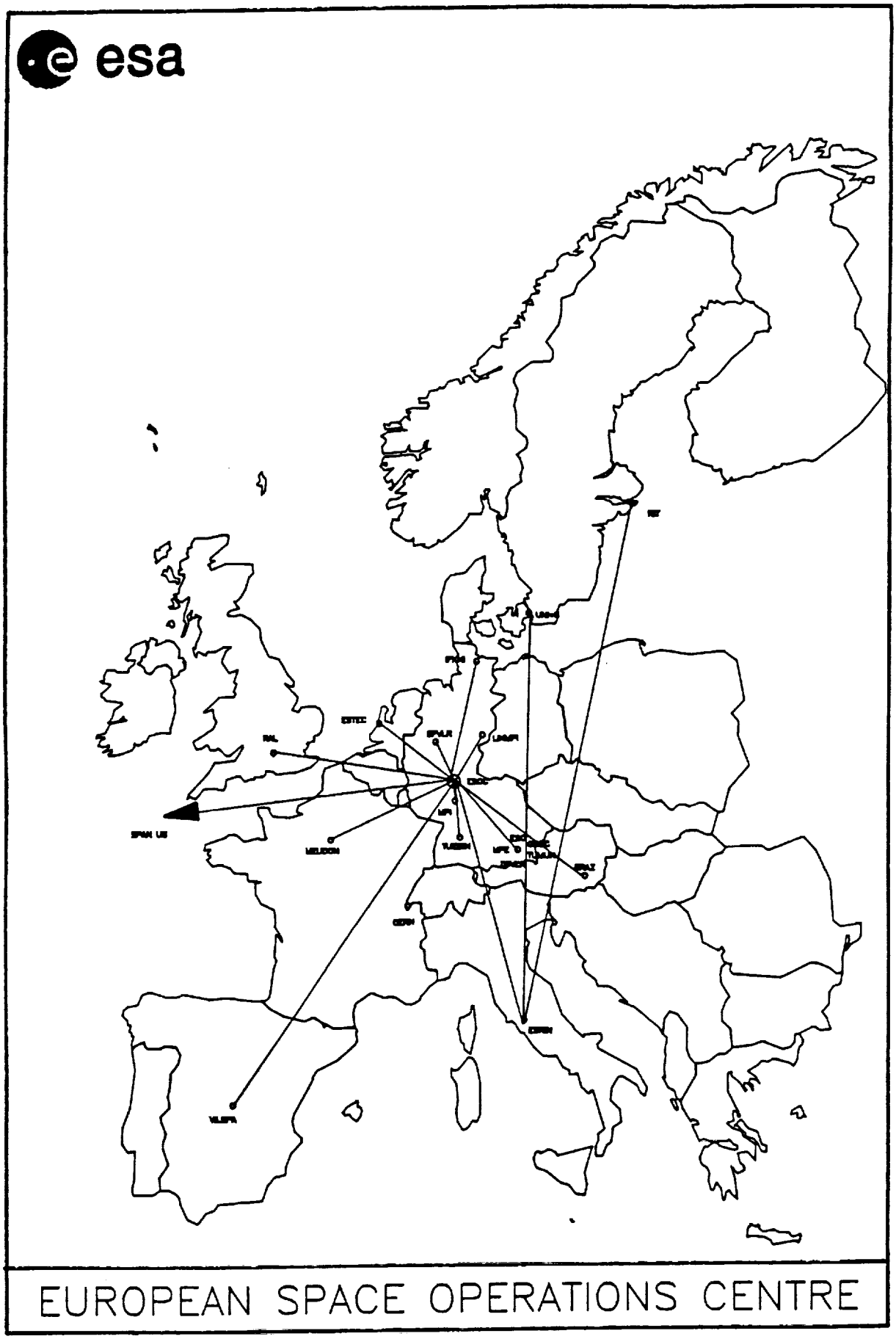

Figure 3. European-SPAN (E-SPAN) Backbone Configuration

The internetwork topology is also shown in Figure 1. SPAN is shown schematically with squares representing the four major routing centers, along with the European-SPAN (E-SPAN) routing center and the Ames Sub-routing Center. In general, there are more interconnections between the various WANs than are shown. The interconnections that are shown are those that have been sanctioned as gateways for the general purpose user. For networks that use DECnet, the gateways are transparent, enabling a user to access a computer on the associated network as easily as any other computer on SPAN.

In September 1986, SPAN made its first connection with the High Energy Physics Network (HEPNET) by virtue of having circuits to the same remote institutions. US-HEPNET is a data communications network supporting high energy physics research in the United States. US-HEPNET is the largest component of the more encompassing Energy Sciences Network/DECnet, a DECnet network run for the benefit of the Office of Energy Research of the U.S. Department of Energy. The topology of US-HEPNET utilizes a routing center approach with U.S. Government laboratories acting as the hubs. Currently, SPAN and HEPNET interconnect at many sites. A new US-SPAN to US-HEPNET backbone-to-backbone link is scheduled to begin service in June 1989. There is also a European component to HEPNET, named European-HEPNET (E-HEPNET). E-HEPNET is managed by the European Organization for Nuclear Research (CERN) in Geneva, Switzerland.

Consisting of over 400 DECnet nodes as of January 1987, THEnet is another DECnet-based WAN to be internetworked with SPAN. THEnet links the three major state universities (Texas A & M, the University of Texas System, and the University of Houston) into a single WAN. As shown in Figure 2, THEnet is interconnected to SPAN via the JSC Routing Center. When THEnet was first encountered, three points of interconnection were planned. A mutual agreement between SPAN and THEnet management limited this to a single gateway between the University of Texas at Austin and the SPAN JSC Routing Center to enhance management of the SPAN to THEnet connection.

III. SPAN_NIC Online Data Base System

A. SPAN_NIC Online Data Base System: Output by Node Name

The following is a listing of SPAN registered nodes currently in the SPAN Network Information Center Online Data Base System (SPAN_NIC). These nodes are listed in alphabetical order by node name (NODEname).

NODE NAME	NODE NUMBER	INSTITUTION	CONTACT POINT	CONTACT E-MAIL	DISCIPLINE
AAP1	9.358	NCAR	LIZ COOLBAUGH	AAP1::LIZ	
AAP2	9.359	NCAR	LIZ COOLBAUGH	AAP1::LIZ	
ACDURS	9.367	NCAR	DANIEL PACKMAN	ACDURS::SYSTEM	ATMOSPHERIC
AFGLSC	6.364	AFGL	LEN D'ALBERTI	AFGLSC::DALBERTI	SOLAR-TERRS
AIBONN	28.800	UNIV OF BONN	PETER KALBERLA	AIBONN::SYSTEM	ASTRONOMY
AIMS	6.361	AFGL	KEITH ROBERTS	AFGL::ROBERTS	SOLAR-TERRS
AIO	9.39	NASA/JSC	MIKE HEIDT	AIO::HEIDT	PLANETARY
ALBEDO	33.47	UNIV OF COLORADO-BOULDER	LARRY BOLEF	RASTER::BOLEF	EARTH SCIENCE
ALCHMY	5.922	CALTECH	DAVE MALERBA	XHMEIA::DEM	CHEMISTRY
ALF	6.70	NASA/GSFC	GARY DORMAN	DSTL85::DORMAN	ALL
ALGOL	33.75	UNIV OF COLORADO-BOULDER	PHIL EVANS	AQUILA::EVANS	ATMOSPHERIC/OCE
ALKOR	28.305	EUROPEAN MOLECULAR BIOLOG	ROY OMOND	EMBL::OMOND	SPACE SCIENCES
AMBER	6.476	SPACE TELESCOPE INSTITUTE	TOM COMEAU	SCIVAX::TCOMEAU	
AMELIA	24.104	MASSACHUSETTS INST. OF TE	ROBERT BRUEN	KARMAN::BRUEN	AERONAUTICAL EN
AML	9.60	NASA/JSC	BOB JONES	AML::JONES	PLANETARY
AMPTE	6.351	APPLIED PHYSICS LABORATOR	STUART NYLUND	AMPTE::NYLUND	SOLAR-TERRS
APLSP	6.350	APPLIED PHYSICS LABORATOR	OLIVER LAMM	APLSP::SYSTEM	SOLAR-TERRS
APOLLO	7.54	STANFORD UNIV	FAISAL KHAN	MCCOY::KHAN	SOLAR-TERRS/ATM
AQUA	6.164	WOODS HOLE OCEANOGRAPHIC	WARREN SASS	RED::SPAN_MANAGER	OCEANS
AQUILA	33.25	UNIV OF COLORADO-BOULDER	PHIL EVANS	AQUILA::EVANS	ATMOSPHERIC/OCE
ARCDEV	6.365	AFGL	KEITH ROBERTS	AFGL::DAPOLITO	SOLAR-TERRS
ARCIP	6.363	AFGL	KEITH ROBERTS	AFGL::ROBERTS	SOLAR-TERRS
ARCNR	17.50	CONSIGLIO NAZIONALE DELLE	REMO BIANCHI	ARCNR::RBIANCHI	SPACE SCIENCE /
ARCNRI	17.51	CONSIGLIO NAZIONALE DELLE	REMO BIANCHI	ARCNRI::RBIANCHI	SPACE SCIENCE/R
ARGOS6	6.631	SERVICE ARGOS INC	DAN MITCHUM	ARGOS6::MITCHUM	
ARIES	33.21	UNIV OF COLORADO-BOULDER	PHIL EVANS	AQUILA::EVANS	PLANETARY/ATMOS
ARLAC	33.83	UNIV OF COLORADO-BOULDER	PHIL EVANS	AQUILA::EVANS	ASTROPHYSICS/AS
ASD	9.5	NASA/JSC	PETE POULOS	ASD::POULOS	PLANETARY
ASTBO1	37.169	C.N.R.	MAURO NANNI	ASTBO1::NANNI	RADIO ASTRONOMY
ASTBO3	38.191	UNIV OF BOLOGNA	ILEANO BONFA	ASTBO2::BONFA	ASTRONOMY
ASTMI1	39.188	UNIV OF MILANO	ANNA LUISA CIAPI	ASTMI1::SYSTEM	ASTRONOMY
ASTMIB	29.186	OBSERV. ASTR. BRERA (MILA	GIUSEPPE MALASPIN	ASTMIB::SYSTEM	ASTRONOMY
ASTMIM	39.187	OBSERV. ASTR. BRERA (MERA	GIUSEPPE MALASPIN	ASTMIB::SYSTEM	ASTRONOMY
ASTMP1	17.61	OBSERV. ASTRON. DI ROMA	DOMENICO NANNI	ASTRMP::NANNI	ASTRONOMY
ASTRBA	29.123	IESI/CNR	ARCANGELO DISTANT	ASTRBA::SYSTEM	COMPUTER SCIENC
ASTRCT	38.70	OBSERV. ASTROFISICO CATAN	P. MASSIMINO & C.	ASTRCT::SYSTEM	ASTRONOMY
ASTRFI	38.150	OBSERV. ASTROFISICO ARCET	RICCARDO ANDREONI	ASTRFI::SYSTEM	ASTRONOMY
ASTRMP	17.60	OBSERVATORIO ASTRONOMICO	DOMENICO NANNI	ASTRMP::NANNI	ASTRONOMY
ASTRNA	39.124	OBSERV. ASTR. CAPODIMONTE	GIUSEPPE LONGO	ASTRNA::SYSTEM	ASTRONOMY
ASTRO	9.56	NASA/JSC	ALEX POPE	B32::POPE	PLANETARY
ASTROG	5.301	USGS	JOHN ZABEL	ASTROG::JZABEL	PLANETARY/GEOLO
ASTROM	39.122	UNIV ROMA "LA SAPIENZA"	GIUSEPPE A. DE BI	ASTROM::SYSTEM	ASTRONOMY
ASTRPD	38.91	OSSERVATORIO ASTRONOMICO	LEOPOLDO BENACCHI	ASTRPD::BENACCHIO	ASTRONOMY
ASTRTO	39.167	UNIVERSITA TORINO	SILVANO MASSAGLIA	ASTRTO::MASSAGLIA	ASTRONOMY
ASTRTS	39.121	OBSERV. ASTRONOMICO TRIES	FABIO PASIAN	ESRIN1::VAXLNF::A	ASTRONOMY
ASTTO2	39.63	OBSERV. ASTRON. PINO TORI	ENZO ANDERLUCCI	ASTTO2::SYSTEM	ASTRONOMY
ATD1	5.257	TRW INC.	DON PLEBUCH	TRWATD::SYSTEM	ALL
ATD2	5.259	TRW INC.	DON PLEBUCH	TRWATD::SYSTEM	ALL
ATHENE	7.55	STANFORD UNIV	FAISAL KHAN	MCCOY::KHAN	SOLAR-TERRS/ATM
ATOM	7.28	NASA/MSFC	TIM BALDRIDGE	SSL::BALDRIDGE	ATOMIC PHYSICS
ATSVAX	7.135	UNIV OF MIAMI-PALM BAY	PAUL EDEN	ATSVAX::EDEN	OCEANS
AUGGIE	7.149	AUGSBURG COLLEGE	MARK ENGEBRETSON	AUGGIE::SYSTEM	UPPER ATMOSPHER
AURORA	7.61	UNIV OF IOWA	MARYRAE DVORSKY	IOWASP::BRECHWALD	SPACE PHYSICS
AUSTRL	5.938	CALTECH	ALAN MATHIOWETZ	WAQVAX::AMM	CHEMISTRY
AVALON	6.478	SPACE TELESCOPE INSTITUTE	TOM COMEAU	SCIVAX::TCOMEAU	

PAGE 8 INTENTIONALLY BLANK

PRECEDING PAGE BLANK NOT FILMED

BS2	9.11	NASA/JSC	ALEX POPE	BS2::POPE	PLANETARY
BALI	33.61	UNIV OF COLORADO	TED WADE	FIJI::TEDWADE	ATMOSPHERIC/OCE
BARANY	24.116	MASSACHUSETTS INST. OF TE	ROBERT BRUEN	KARMAN::BRUEN	AERONAUTICAL EN
BARNEY	5.266	UNIV OF ALASKA/GEOPHYSICA	DICK MILLION	FRED::DICK	GENERAL
BARON	28.293	MAX PLANCK INST FUER KERN	HANS DOEBBELING	ECD1::NETMGR	SPACE SCIENCES
BARTOL	6.216	UNIV OF DELAWARE	PAUL EVENSON	BARTOL::PENGUIN	PHYSICS
BASHFL	5.105	NASA/JPL	JOHN PIOTROWSKI	BASHFL::JDP	SOLAR-TERRS/PLA
BATSE	7.82	UNIV OF MICHIGAN	TERRY WEATHERHOLT	SPRLA::TERRY	ATMOSPHERIC/AST
BBXRT	6.51	NASA/GSFC	MARY ANN ESFANDIA	LHEAVX::MARY	ALL
BERLIN	5.148	NASA/JPL	FRED BURNETTE	BERLIN::BURNETTE	EARTH SCIENCE
BIGELO	3.17	RSMAS	JANET CAMPBELL	MIAMI::*JANETOBIG	OCEANS
BLACK	6.155	WOODS HOLE OCEANOGRAPHIC	WARREN SASS	RED::SPAN MANAGER	OCEANS
BLUE	6.152	WOODS HOLE OCEANOGRAPHIC	WARREN SASS	RED::SPAN MANAGER	OCEANS
BOHR	7.37	NASA/MSFC	JEANETTE RANSOM	SSL::RANSOM	MAGNETOSPHERIC
BONNIE	5.708	UCLA	DR. ZDENKA PLAVEC	BONNIE::ZDENKA	ASTRONOMY
BOREAL	5.939	CALTECH	ALAN MATHIOWETZ	WAGVAX::AMM	CHEMISTRY
BOU	9.200	NASA/JSC	GERALDINE FERRIS	FPEO::FERRIS	PLANETARY
BRONZE	6.169	WOODS HOLE OCEANOGRAPHIC	WARREN SASS	RED::SPAN MANAGER	OCEANS
BRUNET	5.706	UCLA	EDSON SMITH	BRUNET::EDSON	SOLAR-TERRS/PHY
BUASTA	6.501	BOSTON UNIV	DAVID BRADFORD	BUASTA::BRADFORD	ASTRONOMY
BUASTB	6.682	BOSTON UNIV	DAVID BRADFORD	BUASTA::BRADFORD	ALL
CSPC	5.872	CALTECH	BOB LOGAN	HAMLET::BOB	ENERGY PHYSICS
C717	6.78	NASA/GSFC	MARK E. WILSON	C717::SYSTEM	OPTICS
CADLOK	9.85	LOCKHEED ENGINEERING SERV	BEN NGUYEN	LOCK::NGUYEN	
CADR1A	5.890	CALTECH	JON MELVIN	CADRES::JDM	CADRE
CADR1B	5.891	CALTECH	JON MELVIN	CADRES::JDM	CADRE
CADR2A	5.889	CALTECH	JON MELVIN	CADRES::JDM	CADRE
CADR2B	5.892	CALTECH	JON MELVIN	CADRES::JDM	CADRE
CADR3A	5.883	CALTECH	JON MELVIN	CADRES::JDM	CADRE
CADR3B	5.888	CALTECH	JON MELVIN	CADRES::JDM	CADRE
CADRE1	5.880	CALTECH	JON MELVIN	CADRES::JDM	CADRE
CADRE2	5.881	CALTECH	JON MELVIN	CADRES::JDM	CADRE
CADRE3	5.882	CALTECH	JON MELVIN	CADRES::JDM	CADRE
CAFDS0	27.1023	UNIV OF CALIF/IRVINE	CARL FRIEHE	CAFMV1::CARL	FLUID DYNAMICS
CAFMV1	27.289	UNIV OF CALIF/IRVINE	CARL FRIEHE	CAFMV1::CARL	FLUID DYNAMICS
CAFMV2	27.204	UNIV OF CALIF/IRVINE	CARL FRIEHE	CAFMV2::CARL	FLUID DYNAMICS
CALDCK	9.84	LOCKHEED ENGINEERING SERV	BEN NGUYEN	LOCK::NGUYEN	
CALVIN	24.53	MASSACHUSETTS INST. OF TE	ROBERT BRUEN	KARMAN::BRUEN	AERONAUTICAL EN
CANAL1	6.176	WOODS HOLE OCEANOGRAPHIC	WARREN SASS	RED::SYSTEM_WJS1	OCEANS
CANCAL	18.103	UNIV OF CALGARY	LEROY COGGER	CANCAL::COGGER	SPACE PHYSICS/A
CANEDM	18.105	UNIV OF ALBERTA	JOHN SAMSON	CANEDM::SAMSON	SPACE PHYSICS/A
CANLON	18.102	UNIV OF WESTERN ONTARIO	JOHN MACDOUGALL	CANLON::JOHN	SPACE PHYSICS/A
CANOTT	18.100	CANADIAN DATA ANALYSIS NE	DANIEL SERVRANCKX	CANOTT::ACTION	SPACE PHYSICS/A
CANSAS	18.101	UNIV OF SASKATCHEWAN	JIM KOEHLER	CANSAS::KOEHLER	SPACE PHYSICS/A
CAPA	6.301	APPLIED PHYSICS LABORATOR	LORA L. SUTHER	APLSP::SUTHER	SOLAR-TERRS
CAPB	6.302	APPLIED PHYSICS LABORATOR	LORA L. SUTHER	APLSP::SUTHER	SOLAR-TERRS
CAPC	6.303	APPLIED PHYSICS LABORATOR	LORA L. SUTHER	APLSP::SUTHER	SOLAR-TERRS
CAPD	6.304	APPLIED PHYSICS LABORATOR	LORA L. SUTHER	APLSP::SUTHER	SOLAR-TERRS
CAPE	6.305	APPLIED PHYSICS LABORATOR	LORA L. SUTHER	APLSP::SUTHER	SOLAR-TERRS
CAPF	6.306	APPLIED PHYSICS LABORATOR	LORA L. SUTHER	APLSP::SUTHER	SOLAR-TERRS
CAPVAX	6.300	APPLIED PHYSICS LABORATOR	LORA L. SUTHER	APLSP::SUTHER	SOLAR-TERRS
CARA	5.906	CALTECH	CHRIS LEE	DEIMOS::CK1	ASTRONOMY
CARINA	33.84	UNIV OF COLORADO-BOULDER	PHIL EVANS	AQUILA::EVANS	ASTROPHYSICS/AS
CASA	33.333	UNIV OF COLORADO-BOULDER	PHIL EVANS	AQUILA::EVANS	
CASS	27.130	UNIV OF CALIF/SAN DIEGO	RICHARD BENTLEY	CASS::SYSTEM	ASTROPHYSICS
CASS01	27.131	UNIV OF CALIF/SAN DIEGO	ED HOOPES	CASS::SYSTEM	SOLAR-TERRS/AST
CASTOR	6.141	NASA/HEADQUARTERS	MICHAEL C. NEWELL	POLLUX::MNEWELL	OFFICE AUTOMATI
CBEAM	6.185	UNIV OF RHODE ISLAND	DAN HOLLOWAY	URI::DAN	OCEANS
CBZEUS	28.222	MAX PLANCK INST FUER KERN	HANS DOEBBELING	ECD1::NETMGR	SPACE SCIENCES
CCPVGR	5.281	UNIV OF ARIZONA	JOE GOTOBED	LOONEY::GOTOBED	PLANETARY
CDDIS	6.137	NASA/GSFC	CAREY NOLL	CDDIS::ACTMGR	ALL
CDSD5	9.74	NASA/JSC	CHUCK THOMAS	CTSD2::CHUCKS	PLANETARY
CDSXB1	17.500	OBSERV ASTRONOMIQUE DE ST	FRANCOIS BONNAREL	CDSXB1::SYSTEM	ASTRONOMY
CDSXB2	17.501	OBSERV ASTRONOMIQUE DE ST	FRANCOIS BONNAREL	CDSXB1::SYSTEM	ASTRONOMY
CEBAF1	6.270	CEBAF	RICHARD GLASS	CEBAF1::GLASS	ENERGY PHYSICS
CERES	7.62	UNIV OF IOWA	SCOTT ALLENDORF	CERES::SYSTEM	ASTRONOMY

CFA	6.555	SMITHSONIAN ASTROPHY OBSE	ROGER HAUCK	CFA::HAUCK	ASTROPHYSICS
CFA1	6.531	SMITHSONIAN ASTROPHY OBSE	STEVE VAITONES	CFA::VAITONES	ASTRONOMY
CFA2	6.532	SMITHSONIAN ASTROPHY OBSE	ROGER HAUCK	CFA2::HAUCK	ASTROPHYSICS
CFA3	6.533	SMITHSONIAN ASTROPHY OBSE	STEVE VAITONES	CFA::VAITONES	ASTROPHYSICS
CFA4	6.534	SMITHSONIAN ASTROPHY OBSE	STEVE VAITONES	CFA::VAITONES	ASTROPHYSICS
CFA5	6.535	SMITHSONIAN ASTROPHY OBSE	STEVE VAITONES	CFA::VAITONES	ASTROPHYSICS
CFA6	6.536	SMITHSONIAN ASTROPHY OBSE	STEVE VAITONES	CFA::VAITONES	ASTROPHYSICS
CFA7	6.537	SMITHSONIAN ASTROPHY OBSE	STEVE VAITONES	CFA::VAITONES	ASTROPHYSICS
CFA8	6.538	SMITHSONIAN ASTROPHY OBSE	STEVE VAITONES	CFA::VAITONES	ASTROPHYSICS
CFA9	6.539	SMITHSONIAN ASTROPHY OBSE	STEVE VAITONES	CFA::VAITONES	ASTROPHYSICS
CFABOK	6.549	SMITHSONIAN ASTROPHY OBSE	MIKE KURTZ	CFA::KURTZ	ASTRONOMY
CFACE1	6.542	SMITHSONIAN ASTROPHY OBSE	STEVE WARD	CFA::WARD	ASTROPHYSICS
CFAEXI	6.550	SMITHSONIAN ASTROPHY OBSE	MIKE GARCIA	CFA::GARCIA	ASTRONOMY
CFAFIR	6.546	SMITHSONIAN ASTROPHY OBSE	WES TRAUB	CFA::TRAUB	ASTROPHYSICS
CFAGSF	6.600	SMITHSONIAN ASTROPHY OBSE	DOUG KLINE	CFA::KLINE	ASTROPHYSICS
CFAIPD	6.543	SMITHSONIAN ASTROPHY OBSE	EMILIO FALCO-ACOS	CFA::FALCO	ASTROPHSICS
CFAIRT	6.544	SMITHSONIAN ASTROPHY OBSE	CHARLES MAXSON	CFA::MAXSON	ASTROPHYSICS
CFANXT	6.558	SMITHSONIAN ASTROPHY OBSE	DOUG KLINE	CFA::KLINE	ASTROPHYSICS
CFAPS1	6.556	SMITHSONIAN ASTROPHY OBSE	BRIAN MARSDEN	CFA::MARSDEN	ASTROPHYSICS
CFAPS2	6.557	SMITHSONIAN ASTROPHY OBSE	ROGER HAUCK	CFA::HAUCK	ASTROPHYSICS
CFAPS3	6.559	SMITHSONIAN ASTROPHY OBSE		CFAPS3::SYSTEM	ASTROPHYSICS
CFAPS4	6.560	SMITHSONIAN ASTROPHY OBSE	ROGER HAUCK	CFA::HAUK	ASTROPHYSICS
CFARG1	6.551	SMITHSONIAN ASTROPHY OBSE	SHOSHONA ROSENTHA	CFA::SROSENTHAL	ASTRONOMY
CFARG2	6.552	SMITHSONIAN ASTROPHY OBSE	SHOSHONA ROSENTHA	CFA::SROSENTHAL	ASTRONOMY
CFARG3	6.548	SMITHSONIAN ASTROPHY OBSE	SHOSHONA ROSENTHA	CFA::SROSENTHAL	ASTRONOMY
CFAROS	6.541	SMITHSONIAN ASTROPHY OBSE	JOHN MCSWEENY	CFA::MCSWEENY	ASTROPHYSICS
CFASHA	6.545	SMITHSONIAN ASTROPHY OBSE	BILL WYATT	CFA::WYATT	ASTROPHYSICS
CFATA1	6.553	SMITHSONIAN ASTROPHY OBSE	ALAN LIGHTMAN	CFA::LIGHTMAN	ASTRONOMY
CFATA2	6.554	SMITHSONIAN ASTROPHY OBSE	ALAN LIGHTMAN	CFA::LIGHTMAN	ASTRONOMY
CFATYC	6.547	SMITHSONIAN ASTROPHY OBSE	BOB KIRSHNER	CFA::KIRSHNER	ASTROPHYSICS
CHAMP	6.25	NASA/GSFC	FRANK KEEFER	CHAMP::KEEFER	ALL
CHAOS0	28.203	MAX PLANCK INST FUER KERN	HANS DOEBBELING	ECD1::NETMGR	SPACE SCIENCES
CHM2	6.194	UNIV OF RHODE ISLAND	DAN HOLLOWAY	URI::DON	ALL
CITHEX	41.60	CALTECH	KENNETH ADELMAN	HAMLET::KEN	ENERGY PHYSICS
CITNMR	5.924	CALTECH	DAVE MALERBA	XHMEIA:DEM	CHEMISTRY
CITSRL	5.873	CALTECH	CARL LYDICK	CITHEX::CARL	ENERGY PHYSICS
CLAMS	6.159	WOODS HOLE OCEANOGRAPHIC	WARREN SASS	RED::SPAN_MANAGER	OCEANS
CLYDE	5.709	UCLA	DR. ZDENKA PLAVEC	BONNIE::ZDENKA	ASTRONOMY
COBEIT	6.41	NASA/GSFC	TOM ERICKSON	CSDR::XRMBI	ALL
COMET	5.297	LOCKHEED PALO ALTO RESEAR	DAYTON DATLOWE	LOCKHD::DATLOWE	SOLAR-TERRS/ATM
COMI	5.199	NASA/JPL	PAUL WEISSMAN	COMI::PWEISSMAN	SOLAR-TERRS/PLA
CPWANG	6.471	UNIV OF MARYLAND	CHING-PING S. WAN	CPWANG::WANG	PHYSICS
CRPEIS	28.63	CNET-PAB	EDMOND PAWELA	CRPEIS::PAWELA	PHYSICS
CRUX	5.241	NRAO	STEVE GRANDI	DRACO::GRANDI	ASTRONOMY
CRYOEL	9.331	NIST	RICHARD E. HARRIS	CRYOEL::HARRIS	PHYSICS
CSDR	6.29	NASA/GSFC	TOM ERICKSON	CSDR::XRMBI	ALL
CSDR2	6.656	NASA/GSFC	TOM ERICKSON	CSDR::XRMBI	ASTRONOMY
CSO	5.909	CALTECH	BOB LOGAN	HAMLET::BOB	ASTRONOMY
CSPARA	7.11	UNIV OF ALABAMA-HUNTSVILL	HAROLD PIRTLE	CSPARA::PIRTLE	SOLAR TERRES.
CSPARC	7.25	UNIV OF ALABAMA-HUNTSVILL	MIKE GOODMAN	METEOR::GOODMAN	ATMOSPHERIC/MET
CSSL	9.66	NASA/JSC	KYLE SHELTON	LOCK::SHELTON	PLANETARY
CTARGO	5.915	CALTECH	GEORGE DJORGOVSKI	6035::GEORGE	ASTROPHYSICS
CTCM1	9.65	NASA/JSC	CHUCK ALLEN	TCD::ALLEN	PLANETARY
CTD02	6.168	WOODS HOLE OCEANOGRAPHIC	WARREN SASS	RED::SPAN_MANAGER	OCEANS
CTD03	6.166	WOODS HOLE OCEANOGRAPHIC	WARREN SASS	RED::SPAN_MANAGER	OCEANS
CTDP	9.64	NASA/JSC	ERIC BARNHART	CTDP::BARNHART	PLANETARY
CTIOV1	6.503	CERRO TOLOLO INTER-AMERIC	JIM HUGHES	CTIOV1::SYSTEM	ASTRONOMY
CTIOV2	6.504	CERRO TOLOLO INTER-AMERIC	JIM HUGHES	CTIOV1::SYSTEM	ASTRONOMY
CTSD1	9.3	NASA/JSC	CHUCK THOMAS	CTSD2::CHUCKS	PLANETARY
CTSD2	9.79	NASA/JSC	CHUCK THOMAS	CTSD2::CHUCKS	PLANETARY
CTSD3	9.73	NASA/JSC	CHUCK THOMAS	CTSD2::CHUCKS	PLANETARY
CTSD4	9.72	NASA/JSC	CHUCK THOMAS	CTSD2::CHUCKS	PLANETARY
CUBLDR	33.99	UNIV OF COLORADO-BOULDER	KARL PYATT	AQUILA::EVANS	ATMOSPHERIC/OCE
CURLY	7.271	NASA/MSFC	RICH DRINKARD	CURLY::CLMANAGER	DATA REDUCTION
CUSPIF	6.143	CORNELL UNIV	BRIAN CARCICH	CUSPIF::CARCICH	PLANETARY
CYGNUS	33.35	UNIV OF COLORADO-BOULDER	PHIL EVANS	AQUILA::EVANS	ASTROPHYSICS/AS

CYQX1	33.39	UNIV OF COLORADO-BOULDER	PHIL EVANS	AQUILA::EVANS	ASTROPHYSICS/AS
DE614	6.46	NASA/GSFC	BOB TURKELSON	PACF::TURKELSON	ALL
DE696	6.47	NASA/GSFC	LES SALTER	LEPVAX::U4LMS	ALL
DECSAO	6.315	APPLIED PHYSICS LABORATOR	LORA L. SUTHER	APLSP::SUTHER	SOLAR-TERRS
DEIMOS	5.901	CALTECH	CHRISTOPHER K. LE	DEIMOS::CKL	ASTRONOMY
DEIO	6.45	NASA/GSFC	LES SALTER	LEPVAX::U4LMS	ALL
DELOCN	6.145	UNIV OF DELAWARE	FERRIS WEBSTER	DELOCN::FERRIS	OCEANS
DEMIAF	6.15	NASA/GSFC	CHARLES COSNER	MPP::COSNER	ALL
DENALI	7.174	UNIV OF IOWA	ROBERT L. MUTEL	DENALI::SYSTEM	ASTROPHYSICS
DENEB	33.29	UNIV OF COLORADO-BOULDER	PHIL EVANS	AQUILA::EVANS	ATMOSPHERIC/OCE
DEPWI	7.172	UNIV OF IOWA	RICHARD HUFF	IOWASP::BRECHWALD	PLASMA WAVE
DERPS	5.926	CALTECH	D. ZIRIN	SHAKES::"ZAR"	CHEMISTRY
DESIGN	5.884	CALTECH	ERIK ANTONSSON	DESIGN::ANTONSSON	CADRE
DEWY	9.77	NASA/JSC	SHARON LAFUSE	CTSD2::SHARON	PLANETARY
DFTNIC	6.4	NASA/GSFC	CHARLES COSNER	SDCDCL::COSNER	ALL
DIATOM	6.59	NASA/GSFC	ROSA KAO	OCEAN1::ROSA	ALL
DIGLIB	6.223	DARTMOUTH COLLEGE	DOUGLAS A. FRASER	THAYER::DOUGF	ASTRONOMY
DIRAC2	5.298	THE AEROSPACE CORPORATION	JANET CARRE	DIRAC2::CARRE	SPACE SCIENCES
DIRBE	6.34	NASA/GSFC	TOM ERICKSON	CSDR::XRMBI	ALL
DISCO	24.253	USGS	JOHN FIFE	MDQ::SYSTEM	EARTH SCIENCES
DMR	6.35	NASA/GSFC	TOM ERICKSON	CSDR::XRMBI	ALL
DOC	5.106	NASA/JPL	JOHN PIOTROWSKI	DOC::JDP	SOLAR-TERRS/PLA
DONALD	9.70	NASA/JSC	SHARON LAFUSE	CTSD2::SHARON	
DOPEY	5.102	NASA/JPL	JOHN PIOTROWSKI	HAPPY::JDP	SOLAR-TERRS/PLA
DPSD1	9.55	NASA/JSC	DAN ANDERSON	SN::DAN	PLANETARY
DRACO	5.236	NOAO	NIGEL SHARP	DRACO::SHARP	ASTRONOMY
DSPLY1	6.181	UNIV OF RHODE ISLAND			OCEANS
DSPLY2	6.182	UNIV OF RHODE ISLAND			OCEANS
DSTL85	6.17	NASA/GSFC	GARY DORMAN	DSTL85::DORMAN	ALL
DSTL86	6.18	NASA/GSFC	GARY DORMAN	DSTL85::DORMAN	ALL
DUSTY	28.223	MAX PLANCK INST FUER KERN	HANS DOEBBELING	ECD1::NETMGR	SPACE SCIENCES
EARTH1	5.953	CALTECH	CARLOS SALINAS	EARTH1::MANAGER	PLANETARY
EAST	6.769	NASA/GSFC	TODD BUTLER	NSSDCA::NETMGR	SUPPORT
ECD1	28.1	EUROPEAN SPACE OPERATIONS	JENNY FRANKS	ECD1::NETMGR	SPACE SCIENCES
ECGPX	9.71	NASA/JSC	CHUCK THOMAS	CTSD2::CHUCKS	
EDMUND	24.105	MASSACHUSETTS INST. OF TE	ROBERT BRUEN	KARMAN::BRUEN	AERONAUTICAL EN
EDRL01	5.886	CALTECH	JON MELVIN	CADRE3::JDM	CADRE
EGRET	6.52	NASA/GSFC	MARY ANN ESFANDIA	LHEAVX::SYSTEM	ALL
EKJ	28.291	MAX PLANCK INST FUER KERN	HANS DOEBBELING	ECD1::NETMGR	SPACE SCIENCES
ELAN	6.420	SPACE TELESCOPE INSTITUTE	TOM COMEAU	SCIVAX::TCOMEAU	ASTROPHYSICS
ELDYN	6.50	NASA/GSFC	MARY MILLER	ELDYN::U6MLM	ALL
ELROY	33.87	UNIV OF COLORADO-BOULDER	PHIL EVANS	AQUILA::EVANS	ASTROPHYSICS/AS
ELVIS	3.73	UNIV OF MIAMI	BARRY MILLER	CABLES::BARRY	OCEANS
EMBL	28.304	EUROPEAN MOLECULAR BIOLOG	ROY OMOND	EMBL::OMOND	SPACE SCIENCES
ENVNET	6.130	NASA/GSFC	FRANK J. ANDRASCO	ENVNET::ANDRASCO	ALL
EPLAB	9.432	NASA/JSC	BILL BAKER	MEDICS::WBAKER	LIFE SCIENCES
EPLAB	9.183	NASA/JSC	BILL BAKER	MEDICS::WBAKER	LIFE SCIENCES
EPO780	17.10	ESA/ESRIN	MARTIN SPENCE	EPO780::SPENCE	EARTH RESOURCES
EPOMON	17.15	ESA/ESRIN	MARTIN SPENCE	EPO780::SPENCE	EARTH RESOURCES
EPOMV1	17.11	ESA/ESRIN	MARTIN SPENCE	EPO780::SPENCE	EARTH RESOURCES
EQL	5.970	CALTECH	KEN MCCUE	EQL::MCCUE	ALL
ERIN	5.941	CALTECH	PAST HUBER	ERIN::PAT	KELLOGG RADIATI
ERNST	24.113	MASSACHUSETTS INST. OF TE	ROBERT BRUEN	KARMAN::BRUEN	AERONAUTICAL EN
EROSA	7.189	USGS/EROS DATA CENTER	TOM BODAH	EROSA::SYSTEM	EARTH RESOURCES
ERSMV1	17.14	ESA/ESRIN	MARTIN SPENCE	EPO780::SPENCE	EARTH RESOURCES
ERSWS1	17.12	ESA/ESRIN	MARTIN SPENCE	EPO780::SPENCE	EARTH RESOURCES
ESAHQ0	28.859	ESA/HEADQUARTERS	GERBRAND VELDMAN	ESTCS1::GVELDMAN	SPACE RESEARCH
ESDC	7.273	NASA/MSFC	RICH DRINKARD	CURLY::CLMANAGER	DATA REDUCTION
ESIS	17.1	ESA/ESRIN	MIKE BRETT	ESRIN1::MIKE	ASTROPHYSICS
ESOMC1	28.82	EUROPEAN SOUTHERN OBSERVA	RICHARD HOOK	ESOMC1::HOOK	ASTROPHYSICS
ESRIN1	28.2	ESA/ESRIN	JORDI PASCUAL	ESRIN1::JORDI	ASTROPHYSICS
ESRIN2	17.2	ESA/ESRIN	MIGUEL ALBRECHT	ESIS::MIGUEL	ASTROPHYSICS
ESSDP1	1.15	LOS ALAMOS NATIONAL LABOR	JIM KRONE	ESSDP2::SYSTEM	SOLAR-TERRS
ESSDP2	1.5	LOS ALAMOS NATIONAL LABOR	JIM KRONE	ESSDP2::SYSTEM	SOLAR-TERRS
ESTCS0	28.50	ESA/ESTEC	GERBRAND VELDMAN	ESTCS1::GVELDMAN	SPACE RESEARCH
ESTCS1	28.21	ESA/ESTEC	GERBRAND VELDMAN	ESTCS1::GVELDMAN	SPACE SCIENCES

ESTCS2	28.46	ESA/ESTEC	GERBRAND VELDMAN	ESTCS1::GVELDMAN	SPACE SCIENCE
ESTCS3	28.47	ESA/ESTEC	GERBRAND VELDMAN	ESTCS1::GVELDMAN	SPACE SCIENCE
ESTERS	28.43	ESA/ESTEC	C. GARRIDO	ECD1::NETMGR	SPACE SCIENCES
ESTIFA	6.55	NASA/GSFC	STEVE SCOTT	ESTIFA::SYSTEM	ALL
ESTLCC	9.18	NASA/JSC	CHUCK ALLEN	TCD::ALLEN	PLANETARY
ESTLRT	9.19	NASA/JSC	LINDA BROMLEY	ESTLRT::BROMLEY	PLANETARY
ESTMAN	28.855	ESA/ESTEC	GERBRAND VELDMAN	ESTCS1::GVELDMAN	SPACE RESEARCH
ESTSA1	28.22	ESA/ESTEC	URBAN FRISK	ECD1::NETMGR	SPACE SCIENCES
ESTSA2	28.28	ESA/ESTEC	M. PERRYMAN	ESTSA2::MIKE	SPACE SCIENCES
ESTSA5	28.664	ESA/ESTEC	U. FRISK		SPACE SCIENCE
ESTSA6	28.665	ESA/ESTEC	U. FRISK		SPACE SCIENCE
ESTSC1	28.35	ESA/ESTEC	S.T. HO	ECD1::NETMGR	SPACE SCIENCES
ESTTP1	28.24	ESA/ESTEC	NEIL CABLE	ECD1::NETMGR	SPACE SCIENCES
ESTTP2	28.26	ESA/ESTEC	TON VAN OVERBEEK	ECD1::NETMGR	SPACE SCIENCES
ESTTP3	28.27	ESA/ESTEC	TON VAN OVERBEEK	ECD1::NETMGR	SPACE SCIENCES
ESTTR1	28.23	ESA/ESTEC	WERNER KRIEDTE	ECD1::NETMGR	SPACE SCIENCES
ESTTR2	28.25	ESA/ESTEC	WERNER KRIEDTE	ECD1::NETMGR	SPACE SCIENCES
ESTTR3	28.30	ESA/ESTEC	WERNER KRIEDTE	ECD1::NETMGR	SPACE SCIENCES
ESTWD1	28.39	ESA/ESTEC	MATHIEU	ECD1::NETMGR	SPACE SCIENCES
ESTWD2	28.40	ESA/ESTEC	MATHIEU	ECD1::NETMGR	SPACE SCIENCES
ESTWDX	28.41	ESA/ESTEC	MATHIEU	ECD1::NETMGR	SPACE SCIENCES
ESTWDY	28.42	ESA/ESTEC	MATHIEU	ECD1::NETMGR	SPACE SCIENCES
ESTWG1	28.36	ESA/ESTEC	MATHIEU	ECD1::NETMGR	SPACE SCIENCES
ESTWG2	28.37	ESA/ESTEC	MATHIEU	ECD1::NETMGR	SPACE SCIENCES
ESTWG3	28.38	ESA/ESTEC	MATHIEU	ECD1::NETMGR	SPACE SCIENCES
ESTWK4	28.668	ESA/ESTEC	TON VAN OVERBEEK	ESTTP2::SYSTEM	
ESTXE1	28.29	ESA/ESTEC	JAKOB HAMMER	ECD1::NETMGR	SPACE SCIENCES
ESTXE2	28.658	ESA/ESTEC	IAN M. ROBERTS	SENIOR ANTENNA E	ELECTRO MAGNETI
EWOK	7.278	NASA/MSFC	RICH DRINKARD	CURLY::CLMANAGER	DATA REDUCTION
EXOSA3	28.662	ESA/ESTEC	ANDY POLLOCK	EXOSAT::ANDY	SPACE SCIENCE
EXOSA4	28.663	ESA/ESTEC	ANDY POLLOCK	EXOSAT::ANDY	SPACE SCIENCE
EXOSAT	28.31	ESA/ESTEC	RICK SHAFER	ESTSA2::RICK	ASTRONOMY
F1D01	6.311	APPLIED PHYSICS LABORATOR	LORA L. SUTHER	APLSP::SUTHER	SOLAR-TERRS
F2A00	6.312	APPLIED PHYSICS LABORATOR	LORA L. SUTHER	APLSP::SUTHER	SOLAR-TERRS
F2A01	6.313	APPLIED PHYSICS LABORATOR	LORA L. SUTHER	APLSP::SUTHER	SOLAR-TERRS
F2A02	6.314	APPLIED PHYSICS LABORATOR	LORA L. SUTHER	APLSP::SUTHER	SOLAR-TERRS
FDEO	9.22	NASA/JSC	TONY SKELTON	FDEO::SKELTON	FLIGHT DATA ANA
FIJI	33.60	UNIV OF COLORADO-DENVER	TED WADE	FIJI::TEDWADE	ATMOSPHERIC/OCE
FIRAS	6.33	NASA/GSFC	TOM ERICKSON	CSDR::XRMBI	ALL
FOCA	6.411	SPACE TELESCOPE INSTITUTE	TOM COMEAU	SCIVAX::TCOMEAU	ASTROPHYSICS
FOCB	6.412	SPACE TELESCOPE INSTITUTE	TOM COMEAU	SCIVAX::TCOMEAU	ASTROPHYSICS
FOSA	6.414	SPACE TELESCOPE INSTITUTE	IAN EVANS	FOSA::EVANS	ASTROPHYSICS
FPEO	9.1	NASA/JSC	CHUCK WHEELOCK	FPEO::WHEELOCK	PLANETARY
FRANNY	28.204	MAX PLANCK INST FUER KERN	HANS DOEBBELING	ECD1::NETMGR	SPACE SCIENCES
FRED	5.264	UNIV OF ALASKA/GEOPHYSICA	DICK MILLION	FRED::DICK	ALL
FSCARF	5.712	UCLA	ROBERT J. STRANGE	FSCARF::STRANGEWA	SOLAR-TERRS/PHY
FSHEP0	7.311	FLORIDA STATE UNIV	DR. J. HARVEY GOL	FSHEP0::GOLDMAN	HIGH ENERGY PHY
FSHEP1	7.356	FLORIDA STATE UNIV	DR. J. HARVEY GOL	FSHEP0::GOLDMAN	HIGH ENERGY PHY
FSHEP2	7.357	FLORIDA STATE UNIV	DR. J. HARVEY GOL	FSHEP0::GOLDMAN	HIGH ENERGY PHY
FSHEP3	7.358	FLORIDA STATE UNIV	DR. J. HARVEY GOL	FSHEP0::GOLDMAN	HIGH ENERGY PHY
FSHEP4	7.359	FLORIDA STATE UNIV	DR. J. HARVEY GOL	FSHEP0::GOLDMAN	HIGH ENERGY PHY
FSHEP5	7.361	FLORIDA STATE UNIV	DR. J. HARVEY GOL	FSHEP0::GOLDMAN	HIGH ENERGY PHY
FSHEP6	7.360	FLORIDA STATE UNIV	DR. J. HARVEY GOL	FSHEP0::GOLDMAN	HIGH ENERGY PHY
FSHEP7	7.362	FLORIDA STATE UNIV	DR. J. HARVEY GOL	FSHEP0::GOLDMAN	HIGH ENERGY PHY
FSHEP8	7.363	FLORIDA STATE UNIV	DR. J. HARVEY GOL	FSHEP0::GOLDMAN	HIGH ENERGY PHY
FSHEP9	7.364	FLORIDA STATE UNIV	DR. J. HARVEY GOL	FSHEP0::GOLDMAN	HIGH ENERGY PHY
FSUHEP	7.355	FLORIDA STATE UNIV	DR. J. HARVEY GOL	FSHEP0::GOLDMAN	HIGH ENERGY PHY
GABLES	3.74	UNIV OF MIAMI	BARRY MILLER	CABLES:;BARRY	OCEANS
GAL	24.33	NASA/AMES	DONNA FLEURY	GAL::FLEURY	ASTRONOMY/SPACE
GALAXY	33.332	UNIV OF COLORADO-BOULDER	PHIL EVANS	AQUILA::EVANS	
GARFLD	7.276	NASA/MSFC	RICH DRINKARD	CURLY::CLMANAGER	DATA REDUCTION
GLENN	24.103	MASSACHUSETTS INST. OF TE	ROBERT BRUEN	KARMAN::BRUEN	AERONAUTICAL EN
GLL1	5.240	NRAO	STEVE GRANDI	DRACO::GRANDI	ASTRONOMY
GMV1	5.931	CALTECH	ALAN MATHIOWETZ	WAGVAX::AMM	CHEMISTRY
GOLD	6.162	WOODS HOLE OCEANOGRAPHIC	WARREN SASS	RED::SPAN_MANAGER	OCEANS
GONZO	7.272	NASA/MSFC	RICH DRINKARD	CURLY::CLMANAGER	DATA REDUCTION

QPXICE	33.251	UNIV OF COLORADO-BOULDER	LARRY BOLEF	KAOLIN::BOLEF	ATMOSPHERIC/OCE
QPXTOV	39.213	UNIV ROMA "TOR VERGATA"	RENATA KWATERA	VAXTOV::SYSTEM	ASTRONOMY
QRAY	6.154	WOODS HOLE OCEANOGRAPHIC	WARREN SASS	RED::SPAN_MANAGER	OCEANS
QREEN	6.156	WOODS HOLE OCEANOGRAPHIC	WARREN SASS	RED::SPAN_MANAGER	OCEANS
QROUCH	5.3	NASA/JPL	ZONDRA SUNSERI	QROUCH::ZUS	SPACE SCIENCES
QRUMPY	5.104	UCLA	BOB MEHLMAN	QRUMPY::RMEHLMAN	PLANETARY
QUAM	5.40	NASA/JPL	DON BAKER	QUAM::BAKER	ALL
QUS	24.118	MASSACHUSETTS INST. OF TE	ROBERT BRUEN	KARMAN::BRUEN	AERONAUTICAL EN
QVS1	5.932	CALTECH	ALAN MATHIOWETZ	WAQVAX::AMW	CHEMISTRY
QVS2	5.933	CALTECH	ALAN MATHIOWETZ	WAQVAX::AMW	CHEMISTRY
QVS3	5.934	CALTECH	ALAN MATHIOWETZ	WAQVAX::AMW	CHEMISTRY
HAIL	33.334	UNIV OF COLORADO-BOULDER	PHIL EVANS	AQUILA::EVANS	
HAL	24.50	NASA/AMES	DONNA FLEURY	GAL::FLEURY	ASTRONOMY/SPACE
HALOE	10.7	NASA/LANGLEY	MARSHA SHERLAND	HALOE::SYSTEM	ATMOSPHERIC SCI
HAMLET	5.850	CALTECH	VALERIE OKINAKA	HAMLET::VALERIE	ALL
HAPPY	5.100	NASA/JPL	JOHN PIOTROWSKI	HAPPY::JDP	SOLAR-TERRS/PLA
HARDY	7.53	STANFORD UNIV	BRIAN ANDERSEN	HARDY::ANDERSEN	SOLAR-TERRS/ATM
HAWAII	5.270	UNIV OF HAWAII/GEOPHYSICS	JEFF BOSEL	HAWAII::POSTMASTE	PLANETARY/GEOLO
HDRAV0	5.893	CALTECH	JON MELVIN	CADRE3::JDM	CADRE
HEA750	6.16	NASA/GSFC	GARY DORMAN	DSTL85::DORMAN	ALL
HEC	24.64	NASA/AMES	DONNA FLEURY	GAL::FLEURY	ASTRONOMY/SPACE
HELENA	6.500	NASA/HEADQUARTERS	MICHAEL C. NEWELL	POLLUX::MNEWELL	OFFICE AUTOMATI
HERING	28.220	MAX PLANCK INST FUER KERN	HANS DOEBBELING	ECD1::NETMGR	SPACE SCIENCES
HERMAN	24.111	MASSACHUSETTS INST. OF TE	ROBERT BRUEN	KARMAN::BRUEN	AERONAUTICAL EN
HERMIT	7.150	NASA/MSFC	DAVE MERCIER	HERMIT::MERCIER	PROGRAM DEVELOP
HFL	9.58	NASA/JSC	TED KELL	HFL::KELL	PLANETARY
HIASMS	18.151	CANADIAN DATA ANALYSIS NE	DAVE ANGLIN	HIAULY::DAVE	SPACE PHYSICS/A
HIASOL	18.152	CANADIAN DATA ANALYSIS NE	DAVE ANGLIN	HIAULY::DAVE	SPACE PHYSICS/A
HIAULY	18.150	CANADIAN DATA ANALYSIS NE	DAVE ANGLIN	HIAULY::DAVE	SPACE PHYSICS/A
HMF	9.36	NASA/JSC	BILL BAKER	MEDICS::WBAKER	LIFE SCIENCES
HRS	6.28	NASA/GSFC	FRANK KEEFER	CHAMP::KEEFER	SPACE PHYSICS/A
HUEY	9.76	NASA/JSC	SHARON LAFUSE	CTSD2::SHARON	PLANETARY
HYADES	33.40	UNIV OF COLORADO-BOULDER	PHIL EVANS	AQUILA::EVANS	ASTROPHYSICS
HYDRA0	5.885	CALTECH	JON MELVIN	CADRE3::JDM	CADRE
HYRAX	5.320	THE RAND CORPORATION	TIM COLVIN	HYRAX::COLVIN	PLANETARY
IAC	28.172	INSTITUTO DE ASTROFISICA	PEDRO MARTIN	IAC::SYSTEM	
IAF	6.2	NASA/GSFC	CHARLES COSNER	MPP::COSNER	ALL
IAGO	5.854	CALTECH	VALERIE OKINAKA	HAMLET::VALERIE	ALL
IAPC09	28.529	OBSERVATOIRE DE PARIS	PASCAL BLONDE	IAPC09::PASCAL	ASTRONOMY/SPACE
IAPOBS	28.62	INSTITUT D'ASTROPHYSIQUE	D. CESARSKY	ECD1::NETMGR	ASTROPHYSICS
IASETC	28.73	OBSERVATOIRE DE PARIS-MEU	V. TRAN	ECD1::NETMGR	ASTRONOMY/SPACE
IASLAB	28.72	OBSERVATOIRE DE PARIS-MEU	V. TRAN	ECD1::NETMGR	ASTRONOMY/SPACE
IASSET	28.70	OBSERVATOIRE DE PARIS-MEU	V. TRAN	ECD1::NETMGR	ASTRONOMY/SPACE
IASTER	28.71	OBSERVATOIRE DE PARIS-MEU	V. TRAN	ECD1::NETMGR	ASTRONOMY/SPACE
IFKKI	28.151	UNIV OF KIEL	QUENTER GREEN	IFKKI::GREEN	PHYSICS
IFSI	17.70	IFSI	CECILIA CECCARELL	IFSI::SYSTEM	ASTROPHYSICS
IGOR	28.224	MAX PLANCK INST FUER KERN	HANS DOEBBELING	ECD1::NETMGR	SPACE SCIENCES
IGOR	24.100	MASSACHUSETTS INST. OF TE	ROBERT BRUEN	KARMAN::BRUEN	AERONAUTICAL EN
ILLITE	33.46	UNIV OF COLORADO-BOULDER	LARRY BOLEF	RASTER::BOLEF	EARTH SCIENCE
IMAGE	6.462	UNIV OF MARYLAND	LAWRENCE BLEAU	UMAIP::SYSMGR	VISIBLE ASTRONO
IMC	5.923	CALTECH	MANFRED MORARI	IMC::MM	CHEMICAL ENGINE
IMG	6.464	UNIV OF MARYLAND	LAWRENCE BLEAU	UMAIP::SYSMGR	VISIBLE ASTRONO
INO	7.103	NORDA	DEEDEE GARCIA	INO::NETMAN	OCEANS
ION	7.32	NASA/MSFC	JEANETTE RANSOM	SSL::RANSOM	MAGNETOSPHERIC
IOWA	7.64	UNIV OF IOWA	LARRY SCHROEDER	IOWASP::BRECHWALD	PHYSICS
IOWASP	7.63	UNIV OF IOWA	BILL ROBINSON	IOWASP::SYSTEM	SPACE PHYSICS
IPAC	5.857	CALTECH	RICK EBERT	ROMEOLL"RICK%IPAC	ASTRONOMY
IPDGW1	6.93	NASA/GSFC	DAVE WYCKOFF	IPDGW1::WYCKOFF	ALL
ISAS	6.379	ISAS	DR. TAKAHIRO OBAR	NSSDCA::PSI%KYOTO	
ISIS	6.64	NASA/GSFC	JOE GURMAN	SOLMAX::GURMAN	ALL
ISOEOM	7.76	NASA/MSFC	TIM BALDRIDGE	SSL::BALDRIDGE	ATOMIC PHYSICS
ISPIR1	3.70	UNIV OF MIAMI	BARRY MILLER	CABLES::BARRY	OCEANS
ISSAC	5.4	NASA/JPL	JOHN PIOTROWSKI	ISSAC::JDP	SOLAR-TERRS/PLA
IUE	6.20	NASA/GSFC	FRANK KEEFER	CHAMP::KEEFER	ALL
IUESOC	6.92	NASA/GSFC	CHARLES COSNER	MPP::COSNER	OCEANS
JEC	9.2	NASA/JSC	VICKY LUEBE	JEC::VICKY	PLANETARY

JEDAC	27.157	SCRIPPS INST OF OCEANOGRA	STEPHEN PAZAN	JEDAC::PAXAN	OCEANS
JEFFS	24.54	MASSACHUSETTS INST. OF TE	ROBERT BRUEN	KARMAN::BRUEN	AERONAUTICAL EN
JEROME	24.107	MASSACHUSETTS INST. OF TE	ROBERT BRUEN	KARMAN::BRUEN	AERONAUTICAL EN
JPL34A	5.124	NASA/JPL	MALCOM RAYFIELD	JPL34A::MJR	VLSI DEVELOPMEN
JPL34B	5.125	NASA/JPL	MALCOM RAYFIELD	JPL34A::MJR	VLSI DEVELOPMEN
JPL35A	5.20	NASA/JPL	ROBERT NORTON	JPL35A::NORTON	ALL
JPL35B	5.21	NASA/JPL	DAVID LEVINE	JPL35B::SYSTEM	ALL
JPL35C	5.22	NASA/JPL	DAVID LEVINE	JPL35C::SYSTEM	ALL
JPL35D	5.23	NASA/JPL	DAVID LEVINE	JPL35D::SYSTEM	ALL
JPL35E	5.24	NASA/JPL	DAVID LEVINE	JPL35E::SYSTEM	ALL
JPL35F	5.25	NASA/JPL	DAVID LEVINE	JPL35F::SYSTEM	ALL
JPL35G	5.26	NASA/JPL	DAVID LEVINE	JPL35G::SYSTEM	ALL
JPL35H	5.27	NASA/JPL	DAVID LEVINE	JPL35H::SYSTEM	ALL
JPL35I	5.28	NASA/JPL	DAVID LEVINE	JPL35H::SYSTEM	ALL
JPL35J	5.29	NASA/JPL	DAVID LEVINE	JPL35H::SYSTEM	ALL
JPLGP	5.7	NASA/JPL	CHRISTINA SIDROW	JPLGP::CSIDROW	ALL
JPLIF	5.6	NASA/JPL	JOHN PIOTROWSKI	ISSAC::JDP	ALL
JPLLSI	5.11	NASA/JPL	CHUCK MOBLEY	JPLLSI::MOBLEY	VLSI DEVELOPMEN
JPLMAD	5.13	NASA/JPL	EUGENE Y. CHU	JPLMAD::SYSTEM	
JPLNG	5.8	NASA/JPL	CHRISTINA SIDROW	JPLNG::CSIDROW	ALL
JPLOCN	5.57	NASA/JPL	I-LIN TANG	JPLOCN::SYSTEM	OCEAN
JPLOCS	5.143	NASA/JPL	RON TENCATI	JPLOCS::TENCATI	ENGINEERING DEV
JPLPDS	5.1	NASA/JPL	ERIC THEIS	JPLPDS::WSWARTZBA	PLANETARY/ASTRO
JPLRAG	5.12	NASA/JPL	TIM THOMPSON	JPLRAG::THOMPSON	RADIO/SUBMILLIM
JPLSCI	5.14	NASA/JPL	JOHN PIOTROWSKI	ISSAC::JDP	SOLAR-TERRS/PLA
JPLSP	5.5	NASA/JPL	DOUG CLAY	JPLSP::DCLAY	PLASMA WAVE
JPLSP1	5.43	NASA/JPL	BRUCE GOLDSTEIN	JPLSP1::BGOLDSTEI	SPACE PHYSICS
JULIET	5.852	CALTECH	VALERIE OKINAKA	HAMLET::VALERIE	ALL
JUPIT1	5.955	CALTECH	ED DANIELSON	JUPT1::JED	PLANETARY
KAOLIN	33.48	UNIV OF COLORADO-BOULDER	LARRY BOLEF	RASTER::BOLEF	EARTH SCIENCE
KARMAN	24.106	MASSACHUSETTS INST. OF TE	ROBERT BRUEN	KARMAN::BRUEN	AERONAUTICAL EN
KAYZ	6.234	DARTMOUTH COLLEGE	DAVE HELLER	KAYZ::DEH	ASTRONOMY
KECK24	5.887	CALTECH	JON MELVIN	CADRE3::JDM	CADRE
KELLY	5.940	CALTECH	PAT HUBER	ERIN::PAT	KELLOGG RADIATI
KEPLER	6.406	SPACE TELESCOPE INSTITUTE	TOM COMEAU	SCIVAX::TCOMEAU	ASTROPHYSICS
KRAKO	28.296	MAX PLANCK INST FUER KERN	HANS DOEBBELING	ECD1::NETMGR	SPACE SCIENCES
KRYOS	33.250	UNIV OF COLORADO-BOULDER	LARRY BOLEF	KAOLIN::BOLEF	GLACIOLOGY/OCEA
KSCDL1	7.121	NASA/KSC	MARK JUHR	KSCDL1::JUHR	ENGINEERING DEV
KSCDL2	7.122	NASA/KSC	MARK JUHR	KSCDL1::JUHR	ENGINEERING DEV
KSCDL3	7.123	NASA/KSC	MARK JUHR	KSCDL1::JUHR	ENGINEERING DEV
KSCP01	7.131	NASA/KSC	MARK JUHR	KSCDL1::JUHR	SPACELAB/SPACE
KSCP02	7.132	NASA/KSC	MARK JUHR	KSCDL1::JUHR	SPACELAB/SPACE
KSCP03	7.133	NASA/KSC	MARK JUHR	KSCDL1::JUHR	SPACELAB/SPACE
KSCP04	7.134	NASA/KSC	MARK JUHR	KSCDL1::JUHR	SPACELAB/SPACE
KSCRTR	7.124	NASA/KSC	MARK JUHR	KSCDL1::JUHR	ENGINEERING DEV
KUMGM	7.225	UNIV OF KANSAS	MICHAEL HOLMES	KUPHSX::SYSTEM	SOLAR-TERRS
KUPHSX	7.220	UNIV OF KANSAS	MICHAEL HOLMES	KUPHSX::SYSTEM	SOLAR-TERRS
KYOTO	6.144	KYOTO UNIV	TOYO KAMEI	NSSDCA::PSI%KYOTO	SPACE SCIENCES
LAMPS	7.44	UNIVERSITIES SPACE RESEAR	JAYANTHI SRIKISHE	LAMPS::JSRIKISHEN	ATMOSPHERIC PHY
LASR	7.20	UNIV OF CHICAGO	GORDON LENTZ	LASR::LENTZ	ASTROPHYSICS
LAUREL	7.52	STANFORD UNIV	BRIAN ANDERSEN	HARDY::ANDERSEN	SOLAR-TERRS/ATM
LCP	11.50	NRL	ROB SCOTT	LCP::SCOTT	COMPUTER SCIENC
LEPVAX	6.21	NASA/GSFC	MARK SILVERSTEIN	LEPVAX::U2MJS	SPACE PHYSICS
LEWY	9.78	NASA/JSC	SHARON LAFUSE	CTSD2::SHARON	PLANETARY
LHEAVX	6.53	NASA/GSFC	PHIL NEWMAN	LHEAVX::SYSTEM	ALL
LIBRA	18.2	YORK UNIV	FLO VEEL	CANOTT::ACTION	SPACE PHYSICS/A
LINMPI	28.350	MAX PLANCK INST FUER AERO	HANS-JUERGEN MUEL	SYS MANAGER	SPACE SCIENCES
LIONEL	6.469	UNIV OF MARYLAND	DR. NICHOLAS S. C	UMDENP::CHANT	NUCLEAR PHYSICS
LMCX1	33.36	UNIV OF COLORADO-BOULDER	PHIL EVANS	AQUILA::EVANS	ASTROPHYSICS/AS
LMPVAX	24.114	MASSACHUSETTS INST. OF TE	ROBERT BRUEN	KARMAN::BRUEN	AERONAUTICAL EN
LMPWSO	24.115	MASSACHUSETTS INST. OF TE	ROBERT BRUEN	KARMAN::BRUEN	AERONAUTICAL EN
LOCAL	6.461	UNIV OF MARYLAND	LAWRENCE BLEAU	UMAIP::SYSMGR	VISIBLE ASTRONO
LOCK	9.80	LOCKHEED ENGINEERING SERV	NEIL WOLFE	LOCK::WOLFE	OFFICE AUTOMATI
LOCKHD	5.298	LOCKHEED PALO ALTO RESEAR	DAYTON DATLOWE	LOCKHD::NETMGR	SOLAR-TERRS/ATM
LOGOS	5.911	CALTECH	JOHN PIOTROWSKI	ISSAC::JDP	17.6ASTRONOMY
LOKI	6.413	SPACE TELESCOPE INSTITUTE	TOM COMEAU	SCIVAX::TCOMEAU	ASTROPHYSICS

LOLA	27.5	SDSC	GERARD K. NEWMAN	SDSC::GKN	ALL
LOONEY	5.280	UNIV OF ARIZONA	TERRY FORRESTER	LOONEY::FORRESTER	PLANETARY
LPI	9.42	NASA/JSC	KINPONG LEUNG	LPI::LEUNG	PLANETARY
LRSP	5.10	NASA/JPL	JOHN PIOTROWSKI	ISSAC::JDP	SOLAR-TERRS/PLA
LSDNM	9.61	NASA/JSC	LOU PADULA	NEWTON::PADULA	OFFICE AUTOMATI
LSPD	9.43	NASA/JSC	HASAN RAHMAN	LSPD::RAHMAN	PLANETARY
LSUØVX	7.459	LOUISIANA STATE UNIV	T. GREGORY GUZIK	LSUØVX::GUZIK	PARTICLE ASTROP
LTP	6.5	NASA/GSFC	SHAHIN SAMADI	LTP::SHAHIN	ALL
LTP2	6.6	NASA/GSFC	SHAHIN SAMADI	LTP::SHAHIN	ALL
LUAC	27.2	SDSC	GERARD K. NEWMAN	SDSC::GKN	ALL
LUDWIG	24.109	MASSACHUSETTS INST. OF TE	ROBERT BRUEN	KARMAN::BRUEN	AERONAUTICAL EN
LVPCA	27.441	SAIC	ROBERT CRAY	LVVA::POSTMASTER	COMPUTER SCIENC
LVVA	27.435	SAIC	ROBERT CRAY	LVVA::POSTMASTER	COMPUTER SCIENC
LVVB	27.436	SAIC	ROBERT CRAY	LVVA::POSTMASTER	COMPUTER SCIENC
LVVC	27.437	SAIC	ROBERT CRAY	LVVA::POSTMASTER	COMPUTER SCIENC
LVVD	27.438	SAIC	ROBERT CRAY	LVVA::POSTMASTER	COMPUTER SCIENC
LVVE	27.439	SAIC	ROBERT CRAY	LVVA::POSTMASTER	COMPUTER SCIENC
LVVI	27.440	SAIC	ROBERT CRAY	LVVA::POSTMASTER	COMPUTER SCIENC
LYNX	33.32	UNIV OF COLORADO-BOULDER	PHIL EVANS	AQUILA::EVANS	PLANETARY/ATMOS
M5	27.7	SDSC	GERARD K. NEWMAN	SDSC::GKN	ALL
MADMAX	24.255	USGS	GARY CLOW	MADMAX::CLOW	PLANETARY
MADRAF	7.141	UNIV OF WISCONSIN	STEPHAN JANSEN	MADRAF::JANSEN	ASTROPHYSICS
MAGDAT	7.31	NASA/MSFC	JEANETTE RANSOM	SSL::RANSOM	MAGNETOSPHERIC
MAGRPH	7.33	NASA/MSFC	EDWARD WEST	MAGRPH::WEST	SOLAR PHYSICS
MAGSPA	6.49	NASA/GSFC	EDWIN FUNG	CSDR::NNEHF	ALL
MAIA	33.74	UNIV OF COLORADO-BOULDER	PHIL EVANS	AQUILA::EVANS	ATMOSPHERIC/OCE
MANONO	6.90	NASA/GSFC	GENE CARL FELDMAN	SAVAII::GENE	OCEANS
MAP	11.84	NRL	STEFAN THONNARD	MAP::THONNARD	ATMOSPHERIC/SPA
MARGEO	6.199	UNIV OF RHODE ISLAND	JIM DOLAN	MARGEO::SYSTEM	ALL
MARS1	5.954	CALTECH	CARLOS SALINAS	EARTH1::MANAGER	PLANETARY
MARVEL	6.466	UNIV OF MARYLAND	DR. NICHOLAS S. C	UMDENP::CHANT	EXPERIMENTAL NU
MCCOY	7.47	STANFORD UNIV	FAISAL KHAN	MCCOY::KHAN	SOLAR-TERRS/ATM
MCLOCK	9.81	LOCKHEED ENGINEERING SERV	SUE PIOTROWSKI	MCLOCK::PIOTROWSK	OFFICE AUTOMATI
MEDIC2	9.429	NASA/JSC	BILL BAKER	MEDICS::WBAKER	LIFE SCIENCES
MEDICS	9.37	NASA/JSC	BILL BAKER	MEDICS::WBAKER	LIFE SCIENCES
MEGASA	28.56	OBSERVATOIRE DE PARIS-MEU	FRANCOISE PERRIER	MEGASA::PERRIER	ASTRONOMY/SPACE
MELAMA	28.57	OBSERVATOIRE DE PARIS-MEU	ANDREE FERNANDEZ	MELAMA::FERNANDEZ	ASTRONOMY/SPACE
MELAMB	28.58	OBSERVATOIRE DE PARIS-MEU	V. TRAN	ECD1::NETMGR	ASTRONOMY/SPACE
MELAMC	28.59	OBSERVATOIRE DE PARIS-MEU	V. TRAN	ECD1::NETMGR	ASTRONOMY/SPACE
MERCU1	5.951	CALTECH	CARLOS SALINAS	EARTH1::MANAGER	PLANETARY
MESPOA	28.60	OBSERVATOIRE DE PARIS-MEU	PAULETTE MICHENEA	MESPOA::MICHENAU	ASTRONOMY/SPACE
MESPOB	28.61	INSTITUT D'ASTROPHYSICS D	DIEGO A. CESARSKI	IAPOBS::DIEGO	ASTRONOMY/SPACE
METEOR	7.27	UNIV OF ALABAMA-HUNTSVILL	BILL TEOH	METEOR::TEOH	ATMOSPHERIC/MET
MEUDON	28.51	OBSERVATOIRE DE PARIS-MEU	CHRIS HARVEY	MEUDON::HARVEY	SPACE PHYSICS
MIAMI	3.2	RSMAS	JIM BROWN	MIAMI::JIM	OCEANS
MIPL1	5.151	NASA/JPL	SCOTT FULLNER	MIPL3::SEFØØ1	ALL
MIPL2	5.152	NASA/JPL	SCOTT FULLNER	MIPL3::SEFØØ1	ALL
MIPL3	5.153	NASA/JPL	SCOTT FULLNER	MIPL3::SEFØØ1	ALL
MIPL4	5.154	NASA/JPL	TOM GREER	MIPL3::TCQØØØ	ALL
MIRA	5.722	UCLA	DR. ZDENKA PLAVEC	BONNIE::ZDENKA	ASTRONOMY
MITCCD	10.622	MASSACHUSETTS INST. OF TE	PETER FORD	MITCCD::PGF	SPACE SCIENCES
MLSRAC	5.19	NASA/JPL	JOHN BURKE	MLSRAC::OPER	ATMOSPHERE
MMM	9.344	NCAR	PAT WAUKAU	MMM::WAUKAU	
MODAL1	9.16	NASA/JSC	CHUCK MITCHELL	MODAL1::MITCHELL	PLANETARY
MODAL2	9.17	NASA/JSC	DAN ANDERSON	SN::DAN	PLANETARY
MOG	24.252	USGS	JOHN FIFE	MOG::SYSTEM	EARTH SCIENCES
MORITZ	28.290	MAX PLANCK INST FUER KERN	HANS DOEBBELING	ECD1::NETMGR	SPACE SCIENCES
MOSS1	6.419	SPACE TELESCOPE INSTITUTE	TOM COMEAU	SCIVAX::TCOMEAU	ASTROPHYSICS
MOSS2	5.111	NASA/JPL	ZONDRA SUNSERI	MOSS2::ZUS	SPACE SCIENCES
MOTHRA	5.333	UNIV OF WASHINGTON	STEVEN JONES	MOTHRA::NETMGR	ALL
MPE	28.101	MAX PLANCK INST FUER ASTR	KARLHEINZ MUEHLHA	MPE::KZM	ASTROPHYSICS
MPEI1	28.104	MAX PLANCK INST FUER ASTR	MUEHLHAEUSER	ECD1::NETMGR	ASTROPHYSICS
MPEI2	28.107	MAX PLANCK INST FUER ASTR	ARLO REEVES	ECD1::NETMGR	ASTROPHYSICS
MPEX1	28.102	MAX PLANCK INST FUER ASTR	MUEHLHAEUSER	ECD1::NETMGR	ASTROPHYSICS
MPP	6.1	NASA/GSFC	CHARLES COSNER	MPP::COSNER	ALL
MSD1	9.6	NASA/JSC	BOB DOUGHTY	MSD2::DOUGHTY	PLANETARY

MSD2	9.7	NASA/JSC	DONALD YOUNG	QWKDRW::YOUNG	PLANETARY
MUON	5.15	NASA/JPL	ZONDRA SUNSERI	MUON::ZUS	SPACE SCIENCES
MV1	6.11	NASA/GSFC	BRIAN SQUIBB	VAP::SQUIBB	ALL
MV2	6.12	NASA/GSFC	BRIAN SQUIBB	VAP::SQUIBB	ALL
MV3	6.13	NASA/GSFC	BRIAN SQUIBB	VAP::SQUIBB	ALL
MV4	6.14	NASA/GSFC	BRIAN SQUIBB	VAP::SQUIBB	ALL
MV7770	11.38	NRL	JOE WHITE	VX7770::WHITE	COMPUTER APPLIC
MVXNA1	39.205	UNIV OF NAPOLI	PAOLO LO RE	VAXNA::SYSTEM	ASTRONOMY
MVXOAC	39.165	OBSERV. ASTR. CAPODIMONTE	GIUSEPPE LONGO	ASTRNA::SYSTEM	ASTRONOMY
MVXOAT	39.91	OBSERV. ASTRONOMICO TRIES	ROBERTO KRASNA	ASTRTS::SYSTEM	ASTRONOMY
NA34	28.225	MAX PLANCK INST FUER KERN	HANS DOEBBELING	ECD1::NETMGR	SPACE SCIENCES
NAIF	5.2	NASA/JPL	ZONDRA SUNSERI	NAIF::ZUS	SPACE SCIENCES
NB11	28.201	MAX PLANCK INST FUER KERN	HANS DOEBBELING	ECD1::NETMGR	SPACE SCIENCES
NCF	6.139	NASA/GSFC	DOLORES PARKER	NCF::PARKER	ALL
NCFMV1	6.131	NASA/GSFC	TODD BUTLER	NCFMV1::TBUTLER	ALL
NEFC01	6.173	WOODS HOLE OCEANOGRAPHIC	WARREN SASS	RED::SYSTEM_WJS	OCEANS
NEPTU1	5.958	CALTECH	MARK ALLEN		PLANETARY
NEWT	6.407	SPACE TELESCOPE INSTITUTE	TOM COMEAU	SCIVAX::TCOMEAU	ASTROPHYSICS
NEWTON	9.82	NASA/JSC	J.M. ENDSLEY	NEWTON::ENDSLEY	OFFICE AUTOMATI
NILAS	33.161	UNIV OF COLORADO-BOULDER	LARRY BOLEF	AQUILA::EVANS	ATMOSPHERIC/OCE
NIMI1	5.9	NASA/JPL	JOHN PIOTROWSKI	ISSAC::JDP	ALL
NM1	6.221	DARTMOUTH COLLEGE	DOUGLAS A. FRASER	THAYER::DOUGF	ASTRONOMY
NM2	6.222	DARTMOUTH COLLEGE	DOUGLAS A. FRASER	THAYER::DOUGF	ASTRONOMY
NMCC	9.38	NASA/JSC	GLEN PROW	LOCK::PROW	PLANETARY
NODC	6.215	US DEPT OF COMMERCE/NOAA/	JANET WARD	NODC::WARD	OCEANS
NORDA3	7.205	NORDA	MONTY PEFFLEY	NORDA3::PEFFLEY	OCEANS
NPGATE	9.237	NCAR	JON CORBET	RDSS::SYSTEM	
NPSOPT	5.590	NAVAL POST GRADUATE SCHOO	DAVID CLEARY	NPSOPT::CLEARY	SPACE PHYSICS
NRAO	6.510	NATIONAL RADIO ASTRONOMY	AL BRAUN	NRAO::ABRAUN	ASTRONOMY
NRL	11.6	NRL	PAUL LANG	NRL::LANG	COMPUTER SCIENC
NRL1	11.2	NRL	PAUL LANG	NRL::LANG	COMPUTER SCIENC
NRL2	11.3	NRL	PAUL LANG	NRL::LANG	COMPUTER SCIENC
NRLDR1	11.214	NRL	PAUL LANG	LCP::LANG	COMPUTER SCIENC
NRLPLA	11.230	NRL	CHUNGSAN LIN	NRLPLA::LIN	SOLAR-TERRS
NSCAT	5.30	NASA/JPL	CHRISTOPHER FINCH	STANS::CJF	PLANETARY/OCEAN
NSFGW	9.364	NCAR	DON MORRIS		
NSIG3	6.19	NASA/GSFC	EDWIN FUNG	CSDR::NNEHF	ALL
NSSDC	6.132	NASA/GSFC	DOLORES PARKER	NSSDCA::PARKER	ALL
NSSDCA	6.133	NASA/GSFC	DOLORES PARKER	NSSDCA::PARKER	ALL
OAL23A	7.29	UNIV OF ALABAMA-HUNTSVILL	TIM BALDRIDEG	SSL::BALDRIDGE	APPLIED OPTICS
OBIWAN	7.279	NASA/MSFC	RICH DRINKARD	CURLY::CLMANAGER	DATA REDUCTION
OCEAN1	6.58	NASA/GSFC	ROSA KAO	OCEAN1::ROSA	ALL
OCEAN2	6.60	NASA/GSFC	ROSA KAO	OCEAN1::ROSA	ALL
OCIW	5.916	MT. WILSON & LAS CAMPANAS	KEN CLARDY	OCIW::SYSTEM	ASTRONOMY
ODC80	6.375	US DEPT OF COMMERCE/NOAA/	JANET WARD	ODC80::SYSTEM	OCEANS
ODIE	7.277	NASA/MSFC	RICH DRINKARD	CURLY::CLMANAGER	DATA REDUCTION
OKOS	5.912	CALTECH	JOHN PIOTROWSKI	ISSAC::JDP	ASTRONOMY
OLEMAX	6.66	NASA/GSFC	JOSEPH B. GURMAN	OLEMAX::GURMAN	SOLAR PHYSICS
OLIVER	27.9	SDSC	GERARD K. NEWMAN	SDSC::GKN	ALL
OLIVER	28.297	MAX PLANCK INST FUER KERN	HANS DOEBBELING	ECD1::NETMGR	SPACE SCIENCES
OLLI	28.292	MAX PLANCK INST FUER KERN	HANS DOEBBELING	ECD1::NETMGR	SPACE SCIENCES
OOEPE5	28.161	INSTITUTE FOR OPTOELECTRO	GERD ENDERLEIN	OOEPE5::SYSTEM	SPACE SCIENCES
OORT	24.62	NASA/AMES	DONNA FLEURY	GAL::FLEURY	ASTRONOMY/SPACE
OPTICS	7.40	UNIV OF ALABAMA-HUNTSVILL	JIM TROLINGER	OPTICS::TROLINGER	SOLAR-TERRS
ORIENT	5.945	CALTECH	DAN ZIRIN	POSTMASTER@HAMLET	ENGINEERING DEV
ORION	33.22	UNIV OF COLORADO-BOULDER	PHIL EVANS	AQUILA::EVANS	PLANETARY/ATMOS
OTTO	24.101	MASSACHUSETTS INST. OF TE	ROBERT BRUEN	KARMAN::BRUEN	AERONAUTICAL EN
OVRO	5.902	CALTECH	STEVE SCOTT	OVRO::SLS	ASTRONOMY
PACF	6.23	NASA/GSFC	BOB TURKELSON	PACF::TUEKELSON	ALL
PAGES	27.3	SDSC	GERARD K. NEWMAN	SDSC::GKN	ALL
PAL	6.629	NASA/GSFC	WILLIAM THOMPSON	CHAMP::THOMPSON	ALL
PAMB	9.301	NCAR	JOE CHOY	TGCM::CHOY	SOLAR-TERRS/ATM
PARC	9.363	NCAR	BASIL IRWIN		
PAVO	5.117	NASA/JPL	RALPH WEST	LOGOS::WEST	ASTRONOMY
P.C01	6.316	APPLIED PHYSICS LABORATOR	LORA L. SUTHER	APLSP::SUTHER	SOLAR-TERRS
PHOBOS	5.900	CALTECH	CHRIS LEE	DEIMOS::CK1	ASTRONOMY

PHOTON	33.252	UNIV OF COLORADO-BOULDER	LARRY BOLEF	KAOLIN::BOLEF	ATMOSPHERIC/OCE
PHYVAX	3.89	UNIV OF MIAMI	MARCO MONTI	PHYVAX::MARCO	PHYSICS
PISCES	33.26	UNIV OF COLORADO-BOULDER	PHIL EVANS	AQUILA::EVANS	ATMOSPHERIC/OCE
PIXE	28.295	MAX PLANCK INST FUER KERN	HANS DOEBBELING	ECD1::NETMGR	SPACE SCIENCES
PLAFYS	17.150	THE ROYAL INST OF TECHNOL	BENGT H. NILSSON	ESRIN2::PLAFYS::N	PLASMA PHYSICS
PLAID1	9.59	NASA/JSC	BOB DOUGHTY	MSD2::DOUGHTY	PLANETARY
PLAID2	9.62	NASA/JSC	DOUG DOUGHTY	MSD2::DOUGHTY	PLANETARY
PLASMA	6.235	DARTMOUTH COLLEGE	DAVE HELLER	THAYER::DEH	PHYSICS
PLDSJ1	5.47	NASA/JPL	GEORGE KARAS	PLDSJ1::GEORGE	ALL
PLUM	6.161	WOODS HOLE OCEANOGRAPHIC	WARREN SASS	RED::SPAN_MANAGER	OCEANS
PLUTO	3.30	RSMAS	JIM BROWN	MIAMI::JIM	OCEANS
PLUTO1	5.959	CALTECH	CARLOS SALINAS	EARTH1::MANAGER	PLANETARY
POLLUX	6.142	NASA/HEADQUARTERS	MICHAEL C. NEWELL	POLLUX::MNEWELL	OFFICE AUTOMATI
PPD	9.45	NASA/JSC	ROBERT KIDD	PPD::KIDD	PLANETARY
PRO2	7.51	STANFORD UNIV	FAISAL KHAN	MCCOY::KHAN	SOLAR-TERRS/ATM
PROC	6.320	APPLIED PHYSICS LABORATOR	LORA L. SUTHER	APLSP::SUTHER	SOLAR-TERRS
PROC1	6.321	APPLIED PHYSICS LABORATOR	LORA L. SUTHER	APLSP::SUTHER	SOLAR-TERRS
PROC3	6.323	APPLIED PHYSICS LABORATOR	LORA L. SUTHER	APLSP::SUTHER	SOLAR-TERRS
PS300	5.937	CALTECH	ALAN MATHIOWETZ	WAGVAX::AMW	CHEMISTRY
PSIKEY	3.350	PLANETARY SCIENCE INSTITU	STEVE B. HOWELL	PSIKEY::SYSTEM	ASTRONOMY/PLANE
PSNCLU	39.117	PSN/CNR SEZ. MATERA	ESTORE STELLA	PSNMT::SYSTEM	ASTRONOMY/SPACE
PSNMT	39.191	PSN/CNR SEZ. MATERA	ETTORE STELLA	PSNMT::SYSTEM	ASTRONOMY/SPACE
PSNMT1	39.116	CNR/IRA	ETTORE STELLA	PSNMT::SYSTEM	ASTRONOMY/SPACE
PSUMDS	6.430	PENN STATE UNIV	PAUL SHARUM	PSUV01::SHARUM	CLIMATE
PSUV01	6.431	PENN STATE UNIV	PAUL SHARUM	PSUV01::SHARUM	CLIMATE
PUCE	6.163	WOODS HOLE OCEANOGRAPHIC	WARREN SASS	RED::SPAN_MANAGER	OCEANS
RADLAB	9.30	NASA/JSC	ALVA HARDY	RADLAB::HARDY	SOLAR-TERRS/ATM
RANGE	6.463	UNIV OF MARYLAND	LAWRENCE BLEAU	UMAIP::SYSMGR	ASTROPHYSICS
RAP	9.303	NCAR	SHERRY COMES	RAP::SYSTEM	
RAPID	6.362	AFGL	DAGMAR RAPP	AFGL::RAPP	SOLAR-TERRS
RASTER	33.256	UNIV OF COLORADO-BOULDER	LARRY BOLEF	RASTER::BOLEF	EARTH SCIENCE
RDSS	9.236	NCAR	JON CORBET	RDSS::SYSTEM	
RED	6.151	WOODS HOLE OCEANOGRAPHIC	WARREN SASS	RED::SYSTEM_WJS1	OCEANS
RENOIR	9.75	NASA/JSC			PLANETARY
REZIM	28.299	MAX PLANCK INST FUER KERN	HANS DOEBBELING	ECD1::NETMGR	SPACE SCIENCES
RICE	9.201	RICE UNIV	BRYAN BALES	RICE::BALES	ASTRONOMY/SPACE
RIGEL	5.723	UCLA	DR. ZDENKA PLAVEC	BONNIE::ZDENKA	ASTRONOMY
ROBERT	24.102	MASSACHUSETTS INST. OF TE	ROBERT BRUEN	KARMAN::BRUEN	AERONAUTICAL EN
ROMEO	5.851	CALTECH	VALERIE OKINAKA	HAMLET::VALERIE	ALL
ROSAT	6.136	NASA/GSFC	JEANNE BEHNKE	ROSAT::ACTMGR	ALL
ROUTER	7.38	NASA/MSFC	LINDA PORTER	SSL::PORTERL	SPACE SCIENCES
RPS	6.410	SPACE TELESCOPE INSTITUTE	TOM COMEAU	SCIVAX::TCOMEAU	ASTROPHYSICS
RSB	6.417	SPACE TELESCOPE INSTITUTE	TOM COMEAU	SCIVAX::TCOMEAU	ASTROPHYSICS
RSMAS	3.1	RSMAS	JIM BROWN	MIAMI::JIM	ALL
RWATTS	6.183	UNIV OF RHODE ISLAND	DAN HOLLOWAY	URI::DAN	OCEANS
S1P001	6.352	APPLIED PHYSICS LABORATOR	STUART NYLUND	AMPTE::NYLUND	SOLAR-TERRS
S1P002	6.352	APPLIED PHYSICS LABORATOR	STUART NYLUND	AMPTE::NYLUND	SOLAR-TERRS
SAL	6.65	NASA/GSFC	JOE GURMAN	SOLMAX::GURMAN	ALL
SAM	7.35	NASA/MSFC	LINDA PORTER	SSL::PORTERL	SPACE SCIENCES/
SANDOR	33.319	UNIV OF COLORADO-BOULDER	PHIL EVANS	AQUILA::EVANS	
SANTA	5.145	NASA/JPL	CHRISTOPHER FINCH	STANS::CJF	OCEAN
SARIN	33.321	UNIV OF COLORADO-BOULDER	PHIL EVANS	AQUILA::EVANS	
SATUR1	5.956	CALTECH	CARLOS SALINAS	EARTH1::MANAGER	PLANETARY
SAVAII	6.91	NASA/GSFC	CHARLES COSNER	MPP::COSNER	OCEANS
SBRI	9.431	NASA/JSC	BILL BAKER	MEDICS::WBAKER	LIFE SCIENCES
SBRI	9.182	NASA/JSC	BILL BAKER	MEDICS::WBAKER	LIFE SCIENCES
SCALAR	5.907	CALTECH	CHRIS LEE	DEIMOS::CK1	ASTRONOMY
SCFMVS	6.30	NASA/GSFC	HERB DURBECK	STAR::"K3HRD@SCFV	ALL
SCFVM	6.322	NASA/GSFC	HERB DURBECK	STAR::"K3HRD@SCFV	ALL
SCINT	6.38	NASA/GSFC	TOM ERICKSON	CSDR::XRMBI	ALL
SCIVAX	6.405	SPACE TELESCOPE INSTITUTE	DAVE STERN	6559::STERN	ASTROPHYSICS
SCOTTY	7.50	STANFORD UNIV	FAISAL KHAN	MCCOY::KHAN	SOLAR-TERRS/ATM
SCOX1	33.81	UNIV OF COLORADO-BOULDER	PHIL EVANS	AQUILA::EVANS	ASTROPHYSICS/AS
SDCC1	27.140	UNIV OF CALIF/SAN DIEGO	ED HOOPES	CASS::SYSTEM	ACADEMIC COMPUT
SDCC2	27.141	UNIV OF CALIF/SAN DIEGO	ED HOOPES	CASS::SYSTEM	ACADEMIC COMPUT
SDCC4	27.142	UNIV OF CALIF/SAN DIEGO	ED HOOPES	CASS::SYSTEM	ACADEMIC COMPUT

SDCC5	27.143	UNIV OF CALIF/SAN DIEGO	ED HOOPES	CASS::SYSTEM	ACADEMIC COMPUT
SDCC8	27.144	UNIV OF CALIF/SAN DIEGO	ED HOOPES	CASS::SYSTEM	ACADEMIC COMPUT
SDCD	6.7	NASA/GSFC	CHARLES COSNER	MPP::COSNER	ALL
SDCDCL	6.9	NASA/GSFC	CHARLES COSNER	MPP::COSNER	ALL
SDCTSS	27.8	SDSC	GERARD K. NEWMAN	SDSC::GKN	ALL
SDLS2	9.180	NASA/JSC	BILL BAKER	MEDICS::WBAKER	LIFE SCIENCES
SDPH	27.174	UNIV OF CALIF/SAN DIEGO	ED HOOPES	CASS::SYSTEM	ALL
SDPSL0	27.175	UNIV OF CALIF/SAN DIEGO	DR. KYLE WOODWARD	SDPSL0::WOODWARD	ENGINEERING DEV
SDS	27.4	UNIV OF CALIF/SAN DIEGO	E. PAUL LOVE	SDSC::LOVEEP	MATH/COMPUTER S
SDSC	27.1	SDSC	GERARD K. NEWMAN	SDSC::GKN	ALL
SDSD	9.33	NASA/JSC	WAYNE WOLZ	SDSD::WOLZ	PLANETARY
SED	9.9	NASA/JSC	ALEX POPE	B32::POPE	PLANETARY
SEKVAX	5.942	CALTECH	PAT HUBER	ERIN::PAT	KELLOGG RADIATI
SELVAX	9.339	NIST	JIM WILKELMAN	SELVAX::JWINKELMA	SPACE ENVIRONME
SILVER	6.165	WOODS HOLE OCEANOGRAPHIC	WARREN SASS	RED::SPAN MANAGER	OCEANS
SIRIS	6.22	NASA/GSFC	MARK SILVERSTEIN	LEPVAX::U2MJS	ALL
SISSA	37.132	SISSA/ISAS	ROBERTO INNOCENTE	SISSA::SYSTEM	
SLATE	6.167	WOODS HOLE OCEANOGRAPHIC	WARREN SASS	RED::SPAN_MANAGER	OCEANS
SLEEPY	5.101	NASA/JPL	JOHN PIOTROWSKI	HAPPY::JDP	SOLAR-TERRS/PLA
SMD	9.13	NASA/JSC	ROBERT ANDERSON	SMD::ANDY	PLANETARY
SN	9.31	NASA/JSC	DAN ANDERSON	SN::DAN	SPACE SCIENCES
SNAGW	6.332	APPLIED PHYSICS LABORATOR	LORA L. SUTHER	APLSP::SUTHER	SOLAR-TERRS
SNEEZY	5.103	NASA/JPL	JOHN PIOTROWSKI	HAPPY::JDP	SOLAR-TERRS/PLA
SNINAA	9.32	NASA/JSC	DAVID MITTLEFEHLD	SNINAA::DUCK	CHEMISTRY
SODA	9.293	SOUTHWEST RES. INSTITUTE	RON JANETZKE	SWRI::RON	SOLAR-TERRS
SOL1	5.950	CALTECH	JEFF HESTER	SOL1::JJH	PLANETARY/ASTRO
SOLAR	7.48	STANFORD UNIV	RICK BOGART	CORONA::RSB	SOLAR-TERRS/ATM
SOLARX	33.90	UNIV OF COLORADO-BOULDER	URI TOOMRE	AQUILA::EVANS	ATMOSPHERIC/AST
SOLMAX	6.63	NASA/GSFC	JOE GURMAN	SOLMAX::GURMAN	ALL
SPACE	5.265	UNIV OF ALASKA/GEOPHYSICA	RICHARD GURITZ	SPACE::GURITZ	PROGRAM DEVELOP
SPACE1	7.274	NASA/MSFC	RICH DRINKARD	CURLY::CLMANAGER	DATA REDUCTION
SPACE2	7.275	NASA/MSFC	RICH DRINKARD	CURLY::CLMANAGER	DATA REDUCTION
SPANKY	6.171	WOODS HOLE OCEANOGRAPHIC	WARREN SASS	RED::SPAN_MANAGER	OCEANS
SPARC	7.26	UNIV OF ALABAMA-HUNTSVILL	MIKE GOODMAN	METEOR::GOODMAN	ATMOSPHERIC/MET
SPB	7.34	NASA/MSFC	JEANETTE RANSOM	SSL::RANSOM	SOLAR PHYSICS
SPICA	33.30	UNIV OF COLORADO-BOULDER	PHIL EVANS	AQUILA::EVANS	ATMOSPHERIC/OCE
SPOCK	7.46	STANFORD UNIV	CALVIN TEAGUE	STAR::CAL	SOLAR-TERRS/ATM
SPRLA	7.85	UNIV OF MICHIGAN	TERRY WEATHERHOLT	SPRLA::TERRY	ATMOSPHERIC/AST
SPRLB	7.86	UNIV OF MICHIGAN	TERRY WEATHERHOLT	SPRLA::TERRY	ATMOSPHERIC/AST
SPRLC	7.90	UNIV OF MICHIGAN	TERRY WEATHERHOLT	SPRLA::TERRY	ATMOSPHERIC/AST
SPRLD	7.92	UNIV OF MICHIGAN	TERRY WEATHERHOLT	SPRLA::TERRY	ATMOSPHERIC/AST
SPRLF	7.91	UNIV OF MICHIGAN	TERRY WEATHERHOLT	SPRLA::TERRY	ATMOSPHERIC/AST
SSBUV	6.84	NASA/GSFC	HARPER PRYOR	SSBUV::PRYOR	ALL
SSCSTL	7.690	NASA/JOHN C.STENNIS	LES BAHAM	SSCSTL::BAHAM	EARTH SCIENCES
SSD0	11.70	NRL	JOHN ADAMS	SSD0::SYSTEM	ASTRONOMY
SSL	7.39	NASA/MSFC	LINDA PORTER	SSL::PORTERL	SPACE SCIENCES
SSURF	27.150	UNIV OF CALIF/SAN DIEGO	CHRISTOPHER GARRO	SSURF::GARROD	OCEANS
STANS	5.32	NASA/JPL	FRANK SALAMONE	STANS::SYSTEM	PLANETARY/OCEAN
STAR	7.45	STANFORD UNIV	CALVIN TEAGUE	STAR::CAL	SOLAR-TERRS/ATM
STAR1	7.49	STANFORD UNIV	CALVIN TEAGUE	STAR::CAL	SOLAR-TERRS/ATM
STD	9.25	NASA/JSC	BOB DOUGHTY	MSD2::DOUGHTY	PLANETARY
STDVAX	6.32	NASA/GSFC	GARY E. MOSIER	STDVAX::SYSTEM	ALL
STI	6.337	APPLIED PHYSICS LABORATOR	LORA L. SUTHER	APLSP::SUTHER	SOLAR-TERRS
STR	6.335	APPLIED PHYSICS LABORATOR	LORA L. SUTHER	APLSP::SUTHER	SOLAR-TERRS
STR2	6.336	APPLIED PHYSICS LABORATOR	LORA L. SUTHER	APLSP::SUTHER	SOLAR-TERRS
STSCI	6.427	SPACE TELESCOPE INSTITUTE	TOM COMEAU	SCIVAX::TCOMEAU	ASTROPHYSICS
STX	6.138	SAR	LARRY BASILEY	STX::BASILEY	ALL
SUNDOG	5.905	CALTECH	HAL ZIRIN	SUNDOG::HZ	ASTRONOMY
SWNMR	9.296	SOUTHWEST RES. INSTITUTE	RON JANETZKE	SWRI::RON	SOLAR-TERRS
SWRI	9.291	SOUTHWEST RES. INSTITUTE	RON JANETZKE	SWRI::RON	SOLAR-TERRS/ATM
SWRIMV	9.292	SOUTHWEST RES. INSTITUTE	RON JANETZKE	SWRI::RON	SOLAR-TERRS
T1	6.227	DARTMOUTH COLLEGE	DOUGLAS A. FRASER	THAYER::DOUGF	ASTRONOMY
T2	6.226	DARTMOUTH COLLEGE	DOUGLAS A. FRASER	THAYER::DOUGF	ASTRONOMY
TACOS	5.903	CALTECH	BOB LOGAN	TACOS::RTM	PHYSICS
TAMOCN	9.210	TEXAS A & M UNIV	STEVEN WORLEY	TAMOCN::WORLEY	ATMOSPHERIC/OCE
TAN	6.160	WOODS HOLE OCEANOGRAPHIC	WARREN SASS	RED::SPAN_MANAGER	OCEANS

TARDIS	5.904	CALTECH	CHRIS LEE	DEIMOS::CK1	ASTRONOMY
TAURUS	33.37	UNIV OF COLORADO-BOULDER	PHIL EVANS	AQUILA::EVANS	ASTROPHYSICS/AS
TCD	9.8	NASA/JSC	CHUCK ALLEN	TCD::ALLEN	PLANETARY
TELAC	24.120	MASSACHUSETTS INST. OF TE	ROBERT BRUEN	KARMAN::BRUEN	AERONAUTICAL EN
THALIA	33.71	UNIV OF COLORADO-BOULDER	PHIL EVANS	AQUILA::EVANS	ATMOSPHERIC/OCE
THAYER	6.220	DARTMOUTH COLLEGE	DOUGLAS A. FRASER	THAYER::DOUGF	ASTRONOMY
THENIC	25.213	UNIV OF TEXAS	DONALD NASH	THENIC::DON	
THEVAX	5.719	UCLA	DON RUDY	THEVAX::DJR	PLANETARY SCIEN
THISLE	6.170	WOODS HOLE OCEANOGRAPHIC	WARREN SASS	RED::SPAN MANAGER	OCEANS
THOR	3.4	RSMAS	DENNIS CLARK	MIAMI::"DENNISOTH	OCEANS
TOGA	6.172	WOODS HOLE OCEANOGRAPHIC	WARREN SASS	RED::SPAN MANAGER	OCEANS
TONYS	5.31	NASA/JPL	CHRISTOPHER FINCH	STANS::CJF	PLANETARY/OCEAN
TPLOCK	9.83	LOCKHEED ENGINEERING SERV	BEN NGUYEN	TPLOCK::NGUYEN	OFFICE AUTOMATI
TRWPSP	5.260	TRW INC.	MARK ISKRA	TRWPSP::ISKRA	ENERGY PHYSICS
TRWSSD	5.258	TRW INC.	SANDY CHANG	TRWSSD::CHANG	SPACE SCIENCES
TSD	9.27	NASA/JSC	JIM CLARKE	TSD::CLARKE	PLANETARY
TSMI10	37.127	SISSA/ISAS	ROBERTO INNOCENTE	SISSA::SYSTEM	
TSMI11	37.128	SISSA/ISAS	ROBERTO INNOCENTE	SISSA::SYSTEM	
TSMI116	37.135	SISSA/ISAS	ROBERTO INNOCENTE	SISSA::SYSTEM	
TSMI12	37.129	SISSA/ISAS	ROBERTO INNOCENTE	SISSA::SYSTEM	
TSMI13	37.130	SISSA/ISAS	ROBERTO INNOCENTE	SISSA::SYSTEM	
TSMI14	37.131	SISSA/ISAS	ROBERTO INNOCENTE	SISSA::SYSTEM	
TSMI15	37.133	SISSA/ISAS	ROBERTO INNOCENTE	SISSA::SYSTEM	
TSMIV1	37.118	SISSA/ISAS	ROBERTO INNOCENTE	SISSA::SYSTEM	
TSMIV2	37.119	SISSA/ISAS	ROBERTO INNOCENTE	SISSA::SYSTEM	
TSMIV3	37.120	SISSA/ISAS	ROBERTO INNOCENTE	SISSA::SYSTEM	
TSMIV4	37.121	SISSA/ISAS	ROBERTO INNOCENTE	SISSA::SYSTEM	
TSMIV5	37.122	SISSA/ISAS	ROBERTO INNOCENTE	SISSA::SYSTEM	
TSMIV6	37.123	SISSA/ISAS	ROBERTO INNOCENTE	SISSA::SYSTEM	
TSMIV7	37.124	SISSA/ISAS	ROBERTO INNOCENTE	SISSA:SYSTEM	
TSMIV8	37.125	SISSA/ISAS	ROBERTO INNOCENTE	SISSA::SYSTEM	
TSMIV9	37.126	SISSA/ISAS	ROBERTO INNOCENTE	SISSA::SYSTEM	
TSMIX1	37.134	SISSA/ISAS	ROBERTO INNOCENTE	SISSA::SYSTEM	
TUCANA	5.242	NRAO	STEVE GRANDI	DRACO::GRANDI	ASTRONOMY
TUVA	27.455	SAIC	ELIZABETH GILES	TUVA::SYSTEM	MATH/COMPUTER S
TWEED	6.174	WOODS HOLE OCEANOGRAPHIC	WARREN SASS	RED::SYSTEM WJS1	OCEANS
TYCHO	33.337	UNIV OF COLORADO-BOULDER	PHIL EVANS	AQUILA::EVANS	
UADP	24.129	NASA/LANGLEY	MARSHA SHERLAND	UADP::SYSTEM	ATMOSPHERIC
UAHOAL	7.30	UNIV OF ALABAMA-HUNTSVILL	TIM BALDRIDEG	SSL::BALDRIDGE	APPLIED OPTICS
UAP	11.72	NRL	KATHERINE ANDERSE	UAP::ANDERSEN	UPPER ATMOSPHER
UCBRT0	33.70	UNIV OF COLORADO-BOULDER	PHIL EVANS	AQUILA::EVANS	ATMOSPHERIC/OCE
UCBSP	5.289	UNIV OF CALIF/BERKELEY	DAVID CURTIS	UCBSP::SYSTEM	SPACE PHYSICS
UCIAST	27.201	UNIV OF CALIF/IRVINE	DR. GARY CHANAN	UCIAST::GCHANAN	ASTROPHYSICS
UCIHWH	27.278	UNIV OF CALIF/IRVINE	HYSICS	UCIHWH::SYSTEM	ENERGY PHYSICS
UCIQCD	27.287	UNIV OF CALIF/IRVINE	HYSICS	UCIHWH::SYSTEM	ENERGY PHYSICS
UCLAUE	5.725	UCLA	STEPHEN COX	UCLAUE::COX	
UCMBO	5.294	UNIV OF CALIF/SANTA BARBA	KAREN BAKER	UCMBO::KAREN	OCEANS
UCR	27.370	UNIV OF CALIF/RIVERSIDE	GORDON J. VANDALE	UCF::VANDALEN	PHYSICS
UCRAC1	27.351	UNIV OF CALIF/RIVERSIDE	DON JENKINS	UCRAC1::SYSTEM	ACADEMIC COMPUT
UCRAC2	27.352	UNIV OF CALIF/RIVERSIDE	DON JENKINS	UCRAC1::SYSTEM	ACADEMIC COMPUT
UCRAC3	27.353	UNIV OF CALIF/RIVERSIDE	DON JENKINS	UCRAC1::SYSTEM	ACADEMIC COMPUT
UCRAC4	27.354	UNIV OF CALIF/RIVERSIDE	DON JENKINS	UCRAC1::SYSTEM	ACADEMIC COMPUT
UCRAC5	27.355	UNIV OF CALIF/RIVERSIDE	DON JENKINS	UCRAC1::SYSTEM	ACADEMIC COMPUT
UCRBC1	27.367	UNIV OF CALIF/RIVERSIDE	DON JENKINS	UCRAC1::SYSTEM	ACADEMIC COMPUT
UCRBV	27.358	UNIV OF CALIF/RIVERSIDE	DON JENKINS	UCRAC1::SYSTEM	ACADEMIC COMPUT
UCRCH1	27.368	UNIV OF CALIF/RIVERSIDE	DON JENKINS	UCRAC1::SYSTEM	ACADEMIC COMPUT
UCRCS	27.369	UNIV OF CALIF/RIVERSIDE	DON JENKINS	UCRAC1::SYSTEM	ACADEMIC COMPUT
UCRDJ	27.357	UNIV OF CALIF/RIVERSIDE	DON JENKINS	UCRAC1::SYSTEM	ACADEMIC COMPUT
UCRPC1	27.359	UNIV OF CALIF/RIVERSIDE	DON JENKINS	UCRAC1::SYSTEM	ACADEMIC COMPUT
UCRPC8	27.366	UNIV OF CALIF/RIVERSIDE	DON JENKINS	UCRAC1::SYSTEM	ACADEMIC COMPUT
UCRPH1	27.371	UNIV OF CALIF/RIVERSIDE	GORDON J. VANDALE	UCF::VANDALEN	PHYSICS
UCRPH2	27.372	UNIV OF CALIF/RIVERSIDE	GORDON J. VANDALE	UCF::VANDALEN	PHYSICS
UCRPH3	27.373	UNIV OF CALIF/RIVERSIDE	GORDON J. VANDALE	UCF::VANDALEN	PHYSICS
UCRPH5	27.375	UNIV OF CALIF/RIVERSIDE	GORDON J. VANDALE	UCF::VANDALEN	PHYSICS
UCRPH7	27.377	UNIV OF CALIF/RIVERSIDE	GORDON J. VANDALE	UCF::VANDALEN	PHYSICS
UCRPHY	37.379	UNIV OF CALIF/RIVERSIDE	GORDON J. VANDALE	UCF::VANDALEN	PHYSICS

UCRWS	27.356	UNIV OF CALIF/RIVERSIDE	DON JENKINS	UCRAC1::SYSTEM	ACADEMIC COMPUT
UIT	6.26	NASA/GSFC	FRANK KEEFER	CHAMP::KEEFER	ALL
UMAIP	6.460	UNIV OF MARYLAND	LAWRENCE BLEAU	UMAIP::SYSMGR	VISIBLE ASTRONO
UMDENP	6.470	UNIV OF MARYLAND	DR. NICHOLAS S. C	UMDENP::CHANT	EXPERIMENTAL NU
UMDHEP	6.468	UNIV OF MARYLAND	STEPHANIE C. BROW	UMDHEP::MANAGER	HIGH ENERGY PHY
UMDSP	6.402	UNIV OF MARYLAND	DALE BROWN	UMDSP::SYSTEM	SOLAR-TERRS
UMDSPA	6.403	UNIV OF MARYLAND	DALE BROWN	UMDSP::SYSTEM	SOLAR-TERRS
UMDSW	6.400	UNIV OF MARYLAND	ALLON STERN	UMDSW::SYSTEM	SOLAR-TERRS
UMDUAP	6.401	UNIV OF MARYLAND	LARRY LUTZ	UMDSW::LARRY	SOLAR-TERRS
UMIAMI	3.76	UNIV OF MIAMI	BARRY MILLER	GABLES::SYSTEM	OCEANS
UNHRCC	6.721	UNIV OF NEW HAMPSHIRE	BARRY REINHOLD	UNHRCC::BBR	ALL
URANU1	5.957	CALTECH	CARLOS SALINAS	EARTH1::MANAGER	PLANETARY
URCHIN	6.75	NASA/GSFC	ROSA KAO	OCEAN1::ROSA	ALL
URI	6.180	UNIV OF RHODE ISLAND	DAN HOLLOWAY	URI::DAN	OCEANS
URIGSO	6.195	UNIV OF RHODE ISLAND			OCEANS
URMI	28.294	MAX PLANCK INST FUER KERN	HANS DOEBBELING	ECD1::NETMGR	SPACE SCIENCES
USU	7.70	UTAH STATE UNIV	RAY RAWLINS	USU::SYSTEM	MAGNETOSPHERIC
USUISO	7.75	UNIV OF ALABAMA-HUNTSVILL	TIM BALDRIDGE	USUISO::BALDRIDGE	ATOMIC PHYSICS
USUJRD	7.161	UTAH STATE UNIV	JOE DOUPNIK	USU::JRD	SPACE PHYSICS
USUMVA	7.80	UTAH STATE UNIV	RAY RAWLINS	USU::SYSTEM	NONE
UTADNX	25.40	UNIV OF TEXAS	RICK WATSON	UTADNX::CCAW001	
UTD750	9.261	UNIV OF TEXAS-DALLAS	BOB POWERS		SOLAR-TERRS/ATM
UTSPAN	25.128	UNIV OF TEXAS-AUSTIN	RICK WATSON	UTSPAN::R.WATSON	COMPUTER SCIENC
UWFPC	7.142	UNIV OF WISCONSIN	CHRIS ANDERSON	MADRAF::SYSTEM	ASTROPHYSICS
UWSAL	7.143	UNIV OF WISCONSIN	AURA LEIGH BERQUI	MADRAF::SYSTEM	ASTROPHYSICS
UXNHDS	28.221	MAX PLANCK INST FUER KERN	HANS-WERNER HEYNG	UXNHDS::HWH	SPACE SCIENCES
VA	11.41	NRL	GLENN JOYCE	VA::JOYCE	PLASMA THEORY
VAMPI	28.206	MAX PLANCK INST FUER KERN	HANS DOEBBELING	ECD1::NETMGR	SPACE SCIENCES
VAP	6.3	NASA/GSFC	BRIAN SQUIBB	VAP::SQUIBB	ALL
VAX1	6.513	NATIONAL RADIO ASTRONOMY	AL BRAUN	NRAO::ABRAUN	ASTRONOMY
VAXCA2	39.206	UNIV OF CAGLIARI	IGNAZIO PORCEDDU	VAXCA2::PORCEDDU	ASTRONOMY
VAXFI	39.15	UNIVERSITA' DI FIRENZE &	ROBERTO CECCHINI	VAXFI::SYSTEM	HIGH ENERGY
VAXGE	38.254	INSTIT NAZIONAL DI FISICA	CORRADO SALVO	VAXGE::SYSTEM	ASTRONOMY
VAXGEA	38.276	INSTIT NAZIONALE DI FISIC	CORRADO SALVO	VAXGE::SYSTEM	ASTRONOMY
VAXNA1	39.65	UNIV OF NAPOLI	PAOLO LO RE	VAXNA::SYSTEM	ASTRONOMY
VAXTOV	39.56	UNIV OF ROMA "TOR VERGATA	RENATA KWATERA	VAXTOV::SYSTEM	ASTRONOMY
VAXUSR	11.102	NRL	PAUL DOUPONT	VAXUSR::DOUPONT	
VECTOR	5.908	CALTECH	CHRIS LEE	DEIMOS::CK1	ASTRONOMY
VEGA	33.73	UNIV OF COLORADO-BOULDER	PHIL EVANS	AQUILA::EVANS	ATMOSPHERIC/OCE
VELA	5.237	NRAO	STEVE GRANDI	DRACO::GRANDI	ASTRONOMY
VENUS1	5.952	CALTECH	CARLOS SALINAS	EARTH1::MANAGER	PLANETARY
VESTA	33.31	UNIV OF COLORADO-BOULDER	PHIL EVANS	AQUILA::EVANS	ATMOSPHERIC/OCE
VILSPA	28.171	ESA VILLAFRANCA SATELLITE	FRANCISCO MARCELO	VILSPA::SYS	
VIRGO	33.28	UNIV OF COLORADO-BOULDER	PHIL EVANS	AQUILA::EVANS	ATMOSPHERIC/OCE
VIRIS	6.74	NASA/GSFC	MARK SILVERSTEIN	LEPVAX::U2MJS	PLANETARY
VME	11.45	NRL	GLENN JOYCE	VA::JOYCE	PLASMA THEORY
VMS001	6.310	APPLIED PHYSICS LABORATOR	LORA L. SUTHER	APLSP::SUTHER	SOLAR-TERRS
VMSG	9.346	NCAR	CRAIG RUFF		
VORTEX	5.965	CALTECH	PHILIP SAFFMAN	VORTEX::SAFFMAN	APPLIED MATH
VULCAN	33.338	UNIV OF COLORADO-BOULDER	PHIL EVANS	AQUILA::EVANS	
VX740	6.31	NASA/GSFC	RUTH ANN CROUGH	VX740::CROUGH	ALL
VX7770	11.39	NRL	JOE WHITE	VX7770::WHITE	COMPUTER APPLIC
VXBMS	5.701	UCLA	STEPHEN COX	UCLASP::SYSTEM	PLANETARY
WAGVAX	5.930	CALTECH	ALAN MATHIOWETZ	WAGVAX::AMW	CHEMISTRY
WALTER	24.110	MASSACHUSETTS INST. OF TE	ROBERT BRUEN	KARMAN::BRUEN	MECHANICAL ENGI
WARREN	24.117	MASSACHUSETTS INST. OF TE	ROBERT BRUEN	KARMAN::BRUEN	MECHANICAL ENGI
WAVE	27.166	SCRIPPS INST OF OCEANOGRA	JUDY ILLEMAN	WAVE::SYSTEM	OCEANS
WAVES	7.151	UNIV OF MINNESOTA	KEITH GOETZ	SCIENTIST	PLASMA WAVES
WERNER	24.112	MASSACHUSETTS INST. OF TE	ROBERT BRUEN	KARMAN::BRUEN	AERONAUTICAL EN
WFPC	5.960	CALTECH	JEFF HESTER	WFPC::JJH	PLANETARY
WFPC1	5.112	NASA/JPL	DWIGHT C. MOODY J	WFPC1::MOODY	ASTRONOMY/SPACE
WFPC2	5.113	NASA/JPL	DWIGHT C. MOODY J	WFPC1::MOODY	ASTRONOMY/SPACE
WFPCST	6.416	SPACE TELESCOPE INSTITUTE	TOM COMEAU	SCIVAX::TCOMEAU	ASTROPHYSICS
WFPCT1	5.238	NRAO	EARL O'NEIL	DRACO::ONEIL	ASTRONOMY
WFPCT2	5.239	NRAO	EARL O'NEIL	DRACO::ONEIL	ASTRONOMY
WHITE	6.153	WOODS HOLE OCEANOGRAPHIC	WARREN SASS	RED::SPAN_MANAGER	OCEANS

WILBUR	24.52	MASSACHUSETTS INST. OF TE	ROBERT BRUEN	KARMAN::BRUEN	AERONAUTICAL EN
WILLI	28.229	MAX PLANCK INST FUER KERN	HANS DOEBBELING	ECD1::NETMGR	SPACE SCIENCES
WILY	5.36	NASA/JPL	I-LIN TANG	WILY::SYSTEM	OCEANS
WITCH	5.100	NASA/JPL	JOHN PIOTROWSKI	WITCH::JDP	SOLAR-TERRS/PLA
WOWERI	28.289	MAX PLANCK INST FUER KERN	HANS DOEBBELING	ECD1::NETMGR	SPACE SCIENCES
WRF	28.228	MAX PLANCK INST FUER KERN	HANS DOEBBELING	ECD1::NETMGR	SPACE SCIENCES
WUINAA	7.303	WASHINGTON UNIV	SUSAN SLAVNEY	WURST::SLAVNEY	SPACE SCIENCES
WUMV1	7.301	WASHINGTON UNIV	SUSAN SLAVNEY	WURST::SLAVNEY	PLANETARY/GEOLO
WUMV2	7.304	WASHINGTON UNIV	SUSAN SLAVNEY	WURST::SLAVNEY	PLANETARY/GEOLO
WUPRO	7.302	WASHINGTON UNIV	SUSAN SLAVNEY	WURST::SLAVNEY	PLANETARY/GEOLO
WURST	7.300	WASHINGTON UNIV	SUSAN SLAVNEY	WURST::SLAVNEY	PLANETARY/GEOLO
XENOS	5.910	CALTECH	JOHN PIOTROWSKI	ISSAC::JDP	ASTRONOMY
XHMEIA	5.920	CALTECH	DAVE MALERBA	XHMEIA::DEM	CHEMISTRY
XRAY	5.921	CALTECH	DAVE MALERBA	XHMEIA::DEM	CHEMISTRY
YODA	7.270	NASA/MSFC	RICH DRINKARD	CURLY::CLMANAGER	DATA REDUCTION
ZODIAC	33.34	UNIV OF COLORADO-BOULDER	PHIL EVANS	AQUILA::EVANS	ASTROPHYSICS
ZOOEY	28.205	MAX PLANCK INST FUER KERN	HANS DOEBBELING	ECD1::NETMGR	SPACE SCIENCES
ZYKLOP	28.226	MAX PLANCK INST FUER KERN	HANS DOEBBELING	ECD1::NETMGR	SPACE SCIENCES

B. SPAN_NIC Online Data Base System: Output by Country/Institution

The following is a listing of SPAN registered nodes currently in the SPAN Network Information Center Online Data Base System (SPAN_NIC). These nodes are grouped alphabetically. Institutions appear in alphabetical order within country listings.

NODE NUMBER	NODE NAME	INSTITUTION	CITY	COUNTRY
18.100	CANOTT	CANADIAN DATA ANALYSIS NETWORK	OTTAWA	CANADA
18.150	HIAULY	CANADIAN DATA ANALYSIS NETWORK	OTTAWA	CANADA
18.151	HIASMS	CANADIAN DATA ANALYSIS NETWORK	OTTAWA	CANADA
18.152	HIASOL	CANADIAN DATA ANALYSIS NETWORK	OTTAWA	CANADA
18.105	CANEDM	UNIV OF ALBERTA	EDMONTON	CANADA
18.103	CANCAL	UNIV OF CALGARY	CALGARY	CANADA
18.101	CANSAS	UNIV OF SASKATCHEWAN	SASKATOON	CANADA
18.102	CANLON	UNIV OF WESTERN ONTARIO	LONDON	CANADA
18.2	LIBRA	YORK UNIV	DOWNSVILLE	CANADA
6.503	CTIOV1	CERRO TOLOLO INTER-AMERICAN OBSERV	SANTIAGO	CHILE
6.504	CTIOV2	CERRO TOLOLO INTER-AMERICAN OBSERV	SANTIAGO	CHILE
28.83	CRPEIS	CNET-PAB	ISSY LES MOULINEAUX	FRANCE
28.859	ESAHQ0	ESA/HEADQUARTERS	75738 PARIS	FRANCE
28.61	MESPOB	INSTITUT D'ASTROPHYSICS DE PARIS	75014 PARIS	FRANCE
28.62	IAPOBS	INSTITUT D'ASTROPHYSIQUE DE PARIS	75014 PARIS	FRANCE
17.500	CDSXB1	OBSERV ASTRONOMIQUE DE STRASBOURG	STRASBOURG	FRANCE
17.501	CDSXB2	OBSERV ASTRONOMIQUE DE STRASBOURG	STRASBOURG	FRANCE
28.529	IAPC09	OBSERVATOIRE DE PARIS	PARIS	FRANCE
28.51	MEUDON	OBSERVATOIRE DE PARIS-MEUDON	MEUDON	FRANCE
28.56	MEGASA	OBSERVATOIRE DE PARIS-MEUDON	MEUDON	FRANCE
28.57	MELAMA	OBSERVATOIRE DE PARIS-MEUDON	MEUDON	FRANCE
28.58	MELAMB	OBSERVATOIRE DE PARIS-MEUDON	MEUDON	FRANCE
28.59	MELAMC	OBSERVATOIRE DE PARIS-MEUDON	MEUDON	FRANCE
28.60	MESPOA	OBSERVATOIRE DE PARIS-MEUDON	MEUDON	FRANCE
28.70	IASSET	OBSERVATOIRE DE PARIS-MEUDON	MEUDON	FRANCE
28.71	IASTER	OBSERVATOIRE DE PARIS-MEUDON	MEUDON	FRANCE
28.72	IASLAB	OBSERVATOIRE DE PARIS-MEUDON	MEUDON	FRANCE
28.73	IASETC	OBSERVATOIRE DE PARIS-MEUDON	MEUDON	FRANCE
28.26	ESTTP2	ESA/ESTEC	NOORDWIJK-AAN-ZEE	HOLLAND
28.27	ESTTP3	ESA/ESTEC	NOORDWIJK-AAN-ZEE	HOLLAND
28.668	ESTWK4	ESA/ESTEC	NOORDWIJK-AAN-ZEE	HOLLAND
37.169	ASTBO1	C.N.R.	BOLOGNA	ITALY
39.116	PSNMT1	CNR/IRA	MATERA	ITALY
17.50	ARCNR	CONSIGLIO NAZIONALE DELLE RICERCHE	FRASCATI	ITALY
17.51	ARCNRI	CONSIGLIO NAZIONALE DELLE RICERCHE	FRASCATI	ITALY
17.1	ESIS	ESA/ESRIN	ROME	ITALY
17.10	EPO780	ESA/ESRIN	FRASCATI	ITALY
17.11	EPOMV1	ESA/ESRIN	FRASCATI	ITALY
17.12	ERSWS1	ESA/ESRIN	FRASCATI	ITALY
17.14	ERSMV1	ESA/ESRIN	FRASCATI	ITALY
17.15	EPOMON	ESA/ESRIN	FRASCATI	ITALY
17.2	ESRIN2	ESA/ESRIN	ROME	ITALY
28.2	ESRIN1	ESA/ESRIN	ROME	ITALY
29.123	ASTRBA	IESI/CNR	BARI	ITALY
17.70	IFSI	IFSI	C.P. 27	ITALY
38.254	VAXGE	INSTIT NAZIONAL DI FISICA NUCLEARE	GENOA	ITALY
38.276	VAXGEA	INSTIT NAZIONALE DI FISICA NUCLEARE	GENOA	ITALY
39.187	ASTMIM	OBSERV. ASTR. BRERA (MERATE)	MERATE	ITALY
29.186	ASTMIB	OBSERV. ASTR. BRERA (MILANO)	MILANO	ITALY
39.124	ASTRNA	OBSERV. ASTR. CAPODIMONTE	NAPOLI	ITALY
39.165	MVXOAC	OBSERV. ASTR. CAPODIMONTE	NAPOLI	ITALY
38.150	ASTRFI	OBSERV. ASTROFISICO ARCETRI	FIRENZE	ITALY
38.70	ASTRCT	OBSERV. ASTROFISICO CATANIA	CATANIA	ITALY
17.61	ASTMP1	OBSERV. ASTRON. DI ROMA	MONTE PORZIO CATONE	ITALY
39.63	ASTTO2	OBSERV. ASTRON. PINO TORINESE	PINO TORINESSE (TO)	ITALY
39.121	ASTRTS	OBSERV. ASTRONOMICO TRIESTE	TRIESTE	ITALY
39.91	MVXOAT	OBSERV. ASTRONOMICO TRIESTE	TRIESTE	ITALY

17.60	ASTRMP	OBSERVATORIO ASTRONOMICO DI ROMA	MONTE PORZIO CATONE	ITALY
38.91	ASTRPD	OSSERVATORIO ASTRONOMICO	PADOVA	ITALY
39.117	PSNCLU	PSN/CNR SEZ. MATERA	MATERA	ITALY
39.191	PSNMT	PSN/CNR SEZ. MATERA	MATERA	ITALY
37.118	TSMIV1	SISSA/ISAS	TRIESTE	ITALY
37.119	TSMIV2	SISSA/ISAS	TRIESTE	ITALY
37.120	TSMIV3	SISSA/ISAS	TRIESTE	ITALY
37.121	TSMIV4	SISSA/ISAS	TRIESTE	ITALY
37.122	TSMIV5	SISSA/ISAS	TRIESTE	ITALY
37.123	TSMIV6	SISSA/ISAS	TRIESTE	ITALY
37.124	TSMIV7	SISSA/ISAS	TRIESTE	ITALY
37.125	TSMIV8	SISSA/ISAS	TRIESTE	ITALY
37.126	TSMIV9	SISSA/ISAS	TRIESTE	ITALY
37.127	TSMI10	SISSA/ISAS	TRIESTE	ITALY
37.128	TSMI11	SISSA/ISAS	TRIESTE	ITALY
37.129	TSMI12	SISSA/ISAS	TRIESTE	ITALY
37.130	TSMI13	SISSA/ISAS	TRIESTE	ITALY
37.131	TSMI14	SISSA/ISAS	TRIESTE	ITALY
37.132	SISSA	SISSA/ISAS	TRIESTE	ITALY
37.133	TSMI15	SISSA/ISAS	TRIESTE	ITALY
37.134	TSMIX1	SISSA/ISAS	TRIESTE	ITALY
37.135	TSMI116	SISSA/ISAS	TRIESTE	ITALY
38.191	ASTBO3	UNIV OF BOLOGNA	BOLOGNA	ITALY
39.206	VAXCA2	UNIV OF CAGLIARI	CAGLIARI	ITALY
39.188	ASTMI1	UNIV OF MILANO	MILANO	ITALY
39.205	MVXNA1	UNIV OF NAPOLI	NAPOLI	ITALY
39.65	VAXNA1	UNIV OF NAPOLI	NAPOLI	ITALY
39.56	VAXTOV	UNIV OF ROMA "TOR VERGATA"	ROME	ITALY
39.122	ASTROM	UNIV ROMA "LA SAPIENZA"	ROME	ITALY
39.213	GPXTOV	UNIV ROMA "TOR VERGATA"	ROME	ITALY
39.167	ASTRTO	UNIVERSITA TORINO	TORINO	ITALY
39.15	VAXFI	UNIVERSITA' DI FIRENZE & INFN	FIRENZE	ITALY
6.379	ISAS	ISAS	KANAGAWA	JAPAN
6.144	KYOTO	KYOTO UNIV	KYOTO	JAPAN
28.171	VILSPA	ESA VILLAFRANCA SATELLITE TRCK. STA.	MADRID	SPAIN
28.172	IAC	INSTITUTO DE ASTROFISICA DE CANARIAS	TENERIFE	SPAIN
17.160	PLAFYS	THE ROYAL INST OF TECHNOLOGY (KTH)	STOCKHOLM	SWEDEN
28.21	ESTCS1	ESA/ESTEC	NOORDWIJK-AAN-ZEE	THE NETHERLANDS
28.22	ESTSA1	ESA/ESTEC	NOORDWIJK-AAN-ZEE	THE NETHERLANDS
28.23	ESTTR1	ESA/ESTEC	NOORDWIJK-AAN-ZEE	THE NETHERLANDS
28.24	ESTTP1	ESA/ESTEC	NOORDWIJK-AAN-ZEE	THE NETHERLANDS
28.25	ESTTR2	ESA/ESTEC	NOORDWIJK-AAN-ZEE	THE NETHERLANDS
28.28	ESTSA2	ESA/ESTEC	NOORDWIJK-AAN-ZEE	THE NETHERLANDS
28.29	ESTXE1	ESA/ESTEC	NOORDWIJK-AAN-ZEE	THE NETHERLANDS
28.30	ESTTR3	ESA/ESTEC	NOORDWIJK-AAN-ZEE	THE NETHERLANDS
28.31	EXOSAT	ESA/ESTEC	NOORDWIJK-AAN-ZEE	THE NETHERLANDS
28.35	ESTSC1	ESA/ESTEC	NOORDWIJK-AAN-ZEE	THE NETHERLANDS
28.36	ESTWG1	ESA/ESTEC	NOORDWIJK-AAN-ZEE	THE NETHERLANDS
28.37	ESTWG2	ESA/ESTEC	NOORDWIJK-AAN-ZEE	THE NETHERLANDS
28.38	ESTWG3	ESA/ESTEC	NOORDWIJK-AAN-ZEE	THE NETHERLANDS
28.39	ESTWD1	ESA/ESTEC	NOORDWIJK-AAN-ZEE	THE NETHERLANDS
28.40	ESTWD2	ESA/ESTEC	NOORDWIJK-AAN-ZEE	THE NETHERLANDS
28.41	ESTWDX	ESA/ESTEC	NOORDWIJK-AAN-ZEE	THE NETHERLANDS
28.42	ESTWDY	ESA/ESTEC	NOORDWIJK-AAN-ZEE	THE NETHERLANDS
28.43	ESTERS	ESA/ESTEC	NOORDWIJK-AAN-ZEE	THE NETHERLANDS
28.46	ESTCS2	ESA/ESTEC	NOORDWIJK-AAN-ZEE	THE NETHERLANDS
28.47	ESTCS3	ESA/ESTEC	NOORDWIJK-AAN-ZEE	THE NETHERLANDS
28.50	ESTCS0	ESA/ESTEC	NOORDWIJK-AAN-ZEE	THE NETHERLANDS
28.658	ESTXE2	ESA/ESTEC	NOORDWIJK-AAN-ZEE	THE NETHERLANDS
28.662	EXOSA3	ESA/ESTEC	NOORDWIJK-AAN-ZEE	THE NETHERLANDS
28.663	EXOSA4	ESA/ESTEC	NOORDWIJK-AAN-ZEE	THE NETHERLANDS
28.664	ESTSA5	ESA/ESTEC	NOORDWIJK-AAN-ZEE	THE NETHERLANDS
28.665	ESTSA6	ESA/ESTEC	NOORDWIJK-AAN-ZEE	THE NETHERLANDS
28.855	ESTMAN	ESA/ESTEC	NOORDWIJK-AAN-ZEE	THE NETHERLANDS
6.361	AIMS	AFGL	BEDFORD	UNITED STATES
6.362	RAPID	AFGL	BEDFORD	UNITED STATES

6.363	ARCIP	AFGL	BEDFORD	UNITED STATES
6.364	AFGLSC	AFGL	BEDFORD	UNITED STATES
6.365	ARCDEV	AFGL	BEDFORD	UNITED STATES
6.300	CAPVAX	APPLIED PHYSICS LABORATORY (JHU APL)	LAUREL	UNITED STATES
6.301	CAPA	APPLIED PHYSICS LABORATORY (JHU APL)	LAUREL	UNITED STATES
6.302	CAPB	APPLIED PHYSICS LABORATORY (JHU APL)	LAUREL	UNITED STATES
6.303	CAPC	APPLIED PHYSICS LABORATORY (JHU APL)	LAUREL	UNITED STATES
6.304	CAPD	APPLIED PHYSICS LABORATORY (JHU APL)	LAUREL	UNITED STATES
6.305	CAPE	APPLIED PHYSICS LABORATORY (JHU APL)	LAUREL	UNITED STATES
6.306	CAPF	APPLIED PHYSICS LABORATORY (JHU APL)	LAUREL	UNITED STATES
6.310	VMS001	APPLIED PHYSICS LABORATORY (JHU APL)	LAUREL	UNITED STATES
6.311	F1D01	APPLIED PHYSICS LABORATORY (JHU APL)	LAUREL	UNITED STATES
6.312	F2A00	APPLIED PHYSICS LABORATORY (JHU APL)	LAUREL	UNITED STATES
6.313	F2A01	APPLIED PHYSICS LABORATORY (JHU APL)	LAUREL	UNITED STATES
6.314	F2A02	APPLIED PHYSICS LABORATORY (JHU APL)	LAUREL	UNITED STATES
6.315	DECSAD	APPLIED PHYSICS LABORATORY (JHU APL)	LAUREL	UNITED STATES
6.316	PC01	APPLIED PHYSICS LABORATORY (JHU APL)	LAUREL	UNITED STATES
6.320	PROC	APPLIED PHYSICS LABORATORY (JHU APL)	LAUREL	UNITED STATES
6.321	PROC1	APPLIED PHYSICS LABORATORY (JHU APL)	LAUREL	UNITED STATES
6.323	PROC3	APPLIED PHYSICS LABORATORY (JHU APL)	LAUREL	UNITED STATES
6.332	SNAGW	APPLIED PHYSICS LABORATORY (JHU APL)	LAUREL	UNITED STATES
6.335	STR	APPLIED PHYSICS LABORATORY (JHU APL)	LAUREL	UNITED STATES
6.336	STR2	APPLIED PHYSICS LABORATORY (JHU APL)	LAUREL	UNITED STATES
6.337	STI	APPLIED PHYSICS LABORATORY (JHU APL)	LAUREL	UNITED STATES
6.350	APLSP	APPLIED PHYSICS LABORATORY (JHU APL)	LAUREL	UNITED STATES
6.351	AMPTE	APPLIED PHYSICS LABORATORY (JHU APL)	LAUREL	UNITED STATES
6.352	S1P001	APPLIED PHYSICS LABORATORY (JHU APL)	LAUREL	UNITED STATES
6.352	S1P002	APPLIED PHYSICS LABORATORY (JHU APL)	LAUREL	UNITED STATES
7.149	AUGGIE	AUGSBURG COLLEGE	MINNEAPOLIS	UNITED STATES
6.501	BUASTA	BOSTON UNIV	BOSTON	UNITED STATES
6.682	BUASTB	BOSTON UNIV	BOSTON	UNITED STATES
41.60	CITHEX	CALTECH	PASADENA	UNITED STATES
5.850	HAMLET	CALTECH	PASADENA	UNITED STATES
5.851	ROMEO	CALTECH	PASADENA	UNITED STATES
5.852	JULIET	CALTECH	PASADENA	UNITED STATES
5.854	IAGO	CALTECH	PASADENA	UNITED STATES
5.857	IPAC	CALTECH	PASADENA	UNITED STATES
5.872	C3PC	CALTECH	PASADENA	UNITED STATES
5.873	CITSRL	CALTECH	PASADENA	UNITED STATES
5.880	CADRE1	CALTECH	PASADENA	UNITED STATES
5.881	CADRE2	CALTECH	PASADENA	UNITED STATES
5.882	CADRE3	CALTECH	PASADENA	UNITED STATES
5.883	CADR3A	CALTECH	PASADENA	UNITED STATES
5.884	DESIGN	CALTECH	PASADENA	UNITED STATES
5.885	HYDRA0	CALTECH	PASADENA	UNITED STATES
5.886	EDRL01	CALTECH	PASADENA	UNITED STATES
5.887	KECK24	CALTECH	PASADENA	UNITED STATES
5.888	CADR3B	CALTECH	PASADENA	UNITED STATES
5.889	CADR2A	CALTECH	PASADENA	UNITED STATES
5.890	CADR1A	CALTECH	PASADENA	UNITED STATES
5.891	CADR1B	CALTECH	PASADENA	UNITED STATES
5.892	CADR2B	CALTECH	PASADENA	UNITED STATES
5.893	HDRAV0	CALTECH	PASADENA	UNITED STATES
5.900	PHOBOS	CALTECH	PASADENA	UNITED STATES
5.901	DEIMOS	CALTECH	PASADENA	UNITED STATES
5.902	OVRO	CALTECH	PASADENA	UNITED STATES
5.903	TACOS	CALTECH	PASADENA	UNITED STATES
5.904	TARDIS	CALTECH	PASADENA	UNITED STATES
5.905	SUNDOG	CALTECH	PASADENA	UNITED STATES
5.906	CARA	CALTECH	PASADENA	UNITED STATES
5.907	SCALAR	CALTECH	PASADENA	UNITED STATES
5.908	VECTOR	CALTECH	PASADENA	UNITED STATES
5.909	CSO	CALTECH	PASADENA	UNITED STATES
5.910	XENOS	CALTECH	PASADENA	UNITED STATES
5.911	LOGOS	CALTECH	PASADENA	UNITED STATES
5.912	OKOS	CALTECH	PASADENA	UNITED STATES

5.915	CTARGO	CALTECH	PASADENA	UNITED STATES
5.920	XHMEIA	CALTECH	PASADENA	UNITED STATES
5.921	XRAY	CALTECH	PASADENA	UNITED STATES
5.922	ALCHMY	CALTECH	PASADENA	UNITED STATES
5.923	IMC	CALTECH	PASADENA	UNITED STATES
5.924	CITNMR	CALTECH	PASADENA	UNITED STATES
5.926	DERPS	CALTECH	PASADENA	UNITED STATES
5.930	WAQVAX	CALTECH	PASADENA	UNITED STATES
5.931	QMV1	CALTECH	PASADENA	UNITED STATES
5.932	QVS1	CALTECH	PASADENA	UNITED STATES
5.933	QVS2	CALTECH	PASADENA	UNITED STATES
5.934	QVS3	CALTECH	PASADENA	UNITED STATES
5.937	PS300	CALTECH	PASADENA	UNITED STATES
5.938	AUSTRL	CALTECH	PASADENA	UNITED STATES
5.939	BOREAL	CALTECH	PASADENA	UNITED STATES
5.940	KELLY	CALTECH	PASADENA	UNITED STATES
5.941	ERIN	CALTECH	PASADENA	UNITED STATES
5.942	SEKVAX	CALTECH	PASADENA	UNITED STATES
5.945	ORIENT	CALTECH	PASADENA	UNITED STATES
5.950	SOL1	CALTECH	PASADENA	UNITED STATES
5.951	MERCU1	CALTECH	PASADENA	UNITED STATES
5.952	VENUS1	CALTECH	PASADENA	UNITED STATES
5.953	EARTH1	CALTECH	PASADENA	UNITED STATES
5.954	MARS1	CALTECH	PASADENA	UNITED STATES
5.955	JUPIT1	CALTECH	PASADENA	UNITED STATES
5.956	SATUR1	CALTECH	PASADENA	UNITED STATES
5.957	URANU1	CALTECH	PASADENA	UNITED STATES
5.958	NEPTU1	CALTECH	PASADENA	UNITED STATES
5.959	PLUTO1	CALTECH	PASADENA	UNITED STATES
5.960	WFPC	CALTECH	PASADENA	UNITED STATES
5.965	VORTEX	CALTECH	PASADENA	UNITED STATES
5.970	EQL	CALTECH	PASADENA	UNITED STATES
6.270	CEBAF1	CEBAF	NEWPORT NEWS	UNITED STATES
6.143	CUSPIF	CORNELL UNIV	ITHACA	UNITED STATES
6.220	THAYER	DARTMOUTH COLLEGE	HANOVER	UNITED STATES
6.221	NM1	DARTMOUTH COLLEGE	HANOVER	UNITED STATES
6.222	NM2	DARTMOUTH COLLEGE	HANOVER	UNITED STATES
6.223	DIGLIB	DARTMOUTH COLLEGE	HANOVER	UNITED STATES
6.226	T2	DARTMOUTH COLLEGE	HANOVER	UNITED STATES
6.227	T1	DARTMOUTH COLLEGE	HANOVER	UNITED STATES
6.234	KAYZ	DARTMOUTH COLLEGE	HANOVER	UNITED STATES
6.235	PLASMA	DARTMOUTH COLLEGE	HANOVER	UNITED STATES
7.311	FSHEP0	FLORIDA STATE UNIV	TALLAHASSEE	UNITED STATES
7.355	FSUHEP	FLORIDA STATE UNIV	TALLAHASSEE	UNITED STATES
7.356	FSHEP1	FLORIDA STATE UNIV	TALLAHASSEE	UNITED STATES
7.357	FSHEP2	FLORIDA STATE UNIV	TALLAHASSEE	UNITED STATES
7.358	FSHEP3	FLORIDA STATE UNIV	TALLAHASSEE	UNITED STATES
7.359	FSHEP4	FLORIDA STATE UNIV	TALLAHASSEE	UNITED STATES
7.360	FSHEP5	FLORIDA STATE UNIV	TALLAHASSEE	UNITED STATES
7.361	FSHEP6	FLORIDA STATE UNIV	TALLAHASSEE	UNITED STATES
7.362	FSHEP7	FLORIDA STATE UNIV	TALLAHASSEE	UNITED STATES
7.363	FSHEP8	FLORIDA STATE UNIV	TALLAHASSEE	UNITED STATES
7.364	FSHEP9	FLORIDA STATE UNIV	TALLAHASSEE	UNITED STATES
9.80	LOCK	LOCKHEED ENGINEERING SERVICES	HOUSTON	UNITED STATES
9.81	MCLOCK	LOCKHEED ENGINEERING SERVICES	HOUSTON	UNITED STATES
9.83	TPLOCK	LOCKHEED ENGINEERING SERVICES	HOUSTON	UNITED STATES
9.84	CALOCK	LOCKHEED ENGINEERING SERVICES	HOUSTON	UNITED STATES
9.85	CADLOK	LOCKHEED ENGINEERING SERVICES	HOUSTON	UNITED STATES
5.296	LOCKHD	LOCKHEED PALO ALTO RESEARCH LABS	PALO ALTO	UNITED STATES
5.297	COMET	LOCKHEED PALO ALTO RESEARCH LABS	PALO ALTO	UNITED STATES
1.15	ESSDP1	LOS ALAMOS NATIONAL LABORATORY	LOS ALAMOS	UNITED STATES
1.5	ESSDP2	LOS ALAMOS NATIONAL LABORATORY	LOS ALAMOS	UNITED STATES
7.459	LSU0VX	LOUISIANA STATE UNIV	BATON ROUGE	UNITED STATES
10.622	MITCCD	MASSACHUSETTS INST. OF TECHNOLOGY	CAMBRIDGE	UNITED STATES
24.100	IGOR	MASSACHUSETTS INST. OF TECHNOLOGY	CAMBRIDGE	UNITED STATES
24.101	OTTO	MASSACHUSETTS INST. OF TECHNOLOGY	CAMBRIDGE	UNITED STATES

24.102	ROBERT	MASSACHUSETTS INST. OF TECHNOLOGY	CAMBRIDGE	UNITED STATES
24.103	GLENN	MASSACHUSETTS INST. OF TECHNOLOGY	CAMBRIDGE	UNITED STATES
24.104	AMELIA	MASSACHUSETTS INST. OF TECHNOLOGY	CAMBRIDGE	UNITED STATES
24.105	EDMUND	MASSACHUSETTS INST. OF TECHNOLOGY	CAMBRIDGE	UNITED STATES
24.106	KARMAN	MASSACHUSETTS INST. OF TECHNOLOGY	CAMBRIDGE	UNITED STATES
24.107	JEROME	MASSACHUSETTS INST. OF TECHNOLOGY	CAMBRIDGE	UNITED STATES
24.109	LUDWIG	MASSACHUSETTS INST. OF TECHNOLOGY	CAMBRIDGE	UNITED STATES
24.110	WALTER	MASSACHUSETTS INST. OF TECHNOLOGY	CAMBRIDGE	UNITED STATES
24.111	HERMAN	MASSACHUSETTS INST. OF TECHNOLOGY	CAMBRIDGE	UNITED STATES
24.112	WERNER	MASSACHUSETTS INST. OF TECHNOLOGY	CAMBRIDGE	UNITED STATES
24.113	ERNST	MASSACHUSETTS INST. OF TECHNOLOGY	CAMBRIDGE	UNITED STATES
24.114	LMPVAX	MASSACHUSETTS INST. OF TECHNOLOGY	CAMBRIDGE	UNITED STATES
24.115	LMPWSD	MASSACHUSETTS INST. OF TECHNOLOGY	CAMBRIDGE	UNITED STATES
24.116	BARANY	MASSACHUSETTS INST. OF TECHNOLOGY	CAMBRIDGE	UNITED STATES
24.117	WARREN	MASSACHUSETTS INST. OF TECHNOLOGY	CAMBRIDGE	UNITED STATES
24.118	GUS	MASSACHUSETTS INST. OF TECHNOLOGY	CAMBRIDGE	UNITED STATES
24.120	TELAC	MASSACHUSETTS INST. OF TECHNOLOGY	CAMBRIDGE	UNITED STATES
24.52	WILBUR	MASSACHUSETTS INST. OF TECHNOLOGY	CAMBRIDGE	UNITED STATES
24.53	CALVIN	MASSACHUSETTS INST. OF TECHNOLOGY	CAMBRIDGE	UNITED STATES
24.54	JEFFS	MASSACHUSETTS INST. OF TECHNOLOGY	CAMBRIDGE	UNITED STATES
5.916	OCIW	MT. WILSON & LAS CAMPANAS OBSERV	PASADENA	UNITED STATES
24.33	GAL	NASA/AMES	MOFFETT FIELD	UNITED STATES
24.50	HAL	NASA/AMES	MOFFETT FIELD	UNITED STATES
24.62	DORT	NASA/AMES	MOFFETT FIELD	UNITED STATES
24.64	HEC	NASA/AMES	MOFFETT FIELD	UNITED STATES
6.1	MPP	NASA/GSFC	GREENBELT	UNITED STATES
6.11	MV1	NASA/GSFC	GREENBELT	UNITED STATES
6.12	MV2	NASA/GSFC	GREENBELT	UNITED STATES
6.13	MV3	NASA/GSFC	GREENBELT	UNITED STATES
6.130	ENVNET	NASA/GSFC	GREENBELT	UNITED STATES
6.131	NCFMV1	NASA/GSFC	GREENBELT	UNITED STATES
6.132	NSSDC	NASA/GSFC	GREENBELT	UNITED STATES
6.133	NSSDCA	NASA/GSFC	GREENBELT	UNITED STATES
6.136	ROSAT	NASA/GSFC	GREENBELT	UNITED STATES
6.137	CDDIS	NASA/GSFC	GREENBELT	UNITED STATES
6.139	NCF	NASA/GSFC	GREENBELT	UNITED STATES
6.14	MV4	NASA/GSFC	GREENBELT	UNITED STATES
6.15	DEMIAF	NASA/GSFC	GREENBELT	UNITED STATES
6.16	HEA750	NASA/GSFC	GREENBELT	UNITED STATES
6.17	DSTL85	NASA/GSFC	GREENBELT	UNITED STATES
6.18	DSTL86	NASA/GSFC	GREENBELT	UNITED STATES
6.19	NSIGS	NASA/GSFC	GREENBELT	UNITED STATES
6.2	IAF	NASA/GSFC	GREENBELT	UNITED STATES
6.20	IUE	NASA/GSFC	GREENBELT	UNITED STATES
6.21	LEPVAX	NASA/GSFC	GREENBELT	UNITED STATES
6.22	SIRIS	NASA/GSFC	GREENBELT	UNITED STATES
6.23	PACF	NASA/GSFC	GREENBELT	UNITED STATES
6.25	CHAMP	NASA/GSFC	GREENBELT	UNITED STATES
6.26	UIT	NASA/GSFC	GREENBELT	UNITED STATES
6.28	HRS	NASA/GSFC	GREENBELT	UNITED STATES
6.29	CSDR	NASA/GSFC	GREENBELT	UNITED STATES
6.3	VAP	NASA/GSFC	GREENBELT	UNITED STATES
6.30	SCFMVS	NASA/GSFC	GREENBELT	UNITED STATES
6.31	VX740	NASA/GSFC	GREENBELT	UNITED STATES
6.32	STDVAX	NASA/GSFC	GREENBELT	UNITED STATES
6.322	SCFVM	NASA/GSFC	GREENBELT	UNITED STATES
6.33	FIRAS	NASA/GSFC	GREENBELT	UNITED STATES
6.34	DIRBE	NASA/GSFC	GREENBELT	UNITED STATES
6.35	DMR	NASA/GSFC	GREENBELT	UNITED STATES
6.38	SCINT	NASA/GSFC	GREENBELT	UNITED STATES
6.4	DFTNIC	NASA/GSFC	GREENBELT	UNITED STATES
6.41	COBEIT	NASA/GSFC	GREENBELT	UNITED STATES
6.45	DEIO	NASA/GSFC	GREENBELT	UNITED STATES
6.46	DE614	NASA/GSFC	GREENBELT	UNITED STATES
6.47	DE696	NASA/GSFC	GREENBELT	UNITED STATES
6.49	MAGSPA	NASA/GSFC	GREENBELT	UNITED STATES

6.5	LTP	NASA/GSFC	GREENBELT	UNITED STATES
6.50	ELDYN	NASA/GSFC	GREENBELT	UNITED STATES
6.51	BBXRT	NASA/GSFC	GREENBELT	UNITED STATES
6.52	EGRET	NASA/GSFC	GREENBELT	UNITED STATES
6.53	LHEAVX	NASA/GSFC	GREENBELT	UNITED STATES
6.55	ESTIFA	NASA/GSFC	GREENBELT	UNITED STATES
6.58	OCEAN1	NASA/GSFC	GREENBELT	UNITED STATES
6.59	DIATOM	NASA/GSFC	GREENBELT	UNITED STATES
6.6	LTP2	NASA/GSFC	GREENBELT	UNITED STATES
6.60	OCEAN2	NASA/GSFC	GREENBELT	UNITED STATES
6.629	PAL	NASA/GSFC	GREENBELT	UNITED STATES
6.63	SOLMAX	NASA/GSFC	GREENBELT	UNITED STATES
6.64	ISIS	NASA/GSFC	GREENBELT	UNITED STATES
6.65	SAL	NASA/GSFC	GREENBELT	UNITED STATES
6.656	CSDR2	NASA/GSFC	GREENBELT	UNITED STATES
6.66	OLEMAX	NASA/GSFC	GREENBELT	UNITED STATES
6.7	SDCD	NASA/GSFC	GREENBELT	UNITED STATES
6.70	ALF	NASA/GSFC	GREENBELT	UNITED STATES
6.74	VIRIS	NASA/GSFC	GREENBELT	UNITED STATES
6.75	URCHIN	NASA/GSFC	GREENBELT	UNITED STATES
6.769	EAST	NASA/GSFC	GREENBELT	UNITED STATES
6.78	C717	NASA/GSFC	GREENBELT	UNITED STATES
6.84	SSBUV	NASA/GSFC	GREENBELT	UNITED STATES
6.9	SDCDCL	NASA/GSFC	GREENBELT	UNITED STATES
6.90	MANOND	NASA/GSFC	GREENBELT	UNITED STATES
6.91	SAVAII	NASA/GSFC	GREENBELT	UNITED STATES
6.92	IUESOC	NASA/GSFC	GREENBELT	UNITED STATES
6.93	IPDQW1	NASA/GSFC	GREENBELT	UNITED STATES
6.141	CASTOR	NASA/HEADQUARTERS	WASHINGTON	UNITED STATES
6.142	POLLUX	NASA/HEADQUARTERS	WASHINGTON	UNITED STATES
6.500	HELENA	NASA/HEADQUARTERS	WASHINGTON	UNITED STATES
7.690	SSCSTL	NASA/JOHN C.STENNIS	STENNIS SPACE CENTER	UNITED STATES
5.1	JPLPDS	NASA/JPL	PASADENA	UNITED STATES
5.10	LRSP	NASA/JPL	PASADENA	UNITED STATES
5.100	HAPPY	NASA/JPL	PASADENA	UNITED STATES
5.101	SLEEPY	NASA/JPL	PASADENA	UNITED STATES
5.102	DOPEY	NASA/JPL	PASADENA	UNITED STATES
5.103	SNEEZY	NASA/JPL	PASADENA	UNITED STATES
5.105	BASHFL	NASA/JPL	PASADENA	UNITED STATES
5.106	DOC	NASA/JPL	PASADENA	UNITED STATES
5.108	WITCH	NASA/JPL	PASADENA	UNITED STATES
5.11	JPLLSI	NASA/JPL	PASADENA	UNITED STATES
5.111	MOSS2	NASA/JPL	PASADENA	UNITED STATES
5.112	WFPC1	NASA/JPL	PASADENA	UNITED STATES
5.113	WFPC2	NASA/JPL	PASADENA	UNITED STATES
5.117	PAVO	NASA/JPL	PASADENA	UNITED STATES
5.12	JPLRAG	NASA/JPL	PASADENA	UNITED STATES
5.124	JPL34A	NASA/JPL	PASADENA	UNITED STATES
5.125	JPL34B	NASA/JPL	PASADENA	UNITED STATES
5.13	JPLMAD	NASA/JPL	PASADENA	UNITED STATES
5.14	JPLSCI	NASA/JPL	PASADENA	UNITED STATES
5.143	JPLOCS	NASA/JPL	PASADENA	UNITED STATES
5.145	SANTA	NASA/JPL	PASADENA	UNITED STATES
5.148	BERLIN	NASA/JPL	PASADENA	UNITED STATES
5.15	MUON	NASA/JPL	PASADENA	UNITED STATES
5.151	MIPL1	NASA/JPL	PASADENA	UNITED STATES
5.152	MIPL2	NASA/JPL	PASADENA	UNITED STATES
5.153	MIPL3	NASA/JPL	PASADENA	UNITED STATES
5.154	MIPL4	NASA/JPL	PASADENA	UNITED STATES
5.19	MLSRAC	NASA/JPL	PASADENA	UNITED STATES
5.199	COMI	NASA/JPL	PASADENA	UNITED STATES
5.2	NAIF	NASA/JPL	PASADENA	UNITED STATES
5.20	JPL35A	NASA/JPL	PASADENA	UNITED STATES
5.21	JPL35B	NASA/JPL	PASADENA	UNITED STATES
5.22	JPL35C	NASA/JPL	PASADENA	UNITED STATES
5.23	JPL35D	NASA/JPL	PASADENA	UNITED STATES

5.24	JPL35E	NASA/JPL	PASADENA	UNITED STATES
5.25	JPL35F	NASA/JPL	PASADENA	UNITED STATES
5.26	JPL35G	NASA/JPL	PASADENA	UNITED STATES
5.27	JPL35H	NASA/JPL	PASADENA	UNITED STATES
5.28	JPL35I	NASA/JPL	PASADENA	UNITED STATES
5.29	JPL35J	NASA/JPL	PASADENA	UNITED STATES
5.3	GROUCH	NASA/JPL	PASADENA	UNITED STATES
5.30	NSCAT	NASA/JPL	PASADENA	UNITED STATES
5.31	TONYS	NASA/JPL	PASADENA	UNITED STATES
5.32	STANS	NASA/JPL	PASADENA	UNITED STATES
5.36	WILY	NASA/JPL	PASADENA	UNITED STATES
5.4	ISSAC	NASA/JPL	PASADENA	UNITED STATES
5.40	GUAM	NASA/JPL	PASADENA	UNITED STATES
5.43	JPLSP1	NASA/JPL	PASADENA	UNITED STATES
5.47	PLDSJ1	NASA/JPL	PASADENA	UNITED STATES
5.5	JPLSP	NASA/JPL	PASADENA	UNITED STATES
5.57	JPLOCN	NASA/JPL	PASEDENA	UNITED STATES
5.6	JPLIF	NASA/JPL	PASADENA	UNITED STATES
5.7	JPLQP	NASA/JPL	PASADENA	UNITED STATES
5.8	JPLNG	NASA/JPL	PASADENA	UNITED STATES
5.9	NIMI1	NASA/JPL	PASADENA	UNITED STATES
9.1	FPEO	NASA/JSC	HOUSTON	UNITED STATES
9.11	B32	NASA/JSC	HOUSTON	UNITED STATES
9.13	SMD	NASA/JSC	HOUSTON	UNITED STATES
9.16	MODAL1	NASA/JSC	HOUSTON	UNITED STATES
9.17	MODAL2	NASA/JSC	HOUSTON	UNITED STATES
9.18	ESTLCC	NASA/JSC	HOUSTON	UNITED STATES
9.180	SDLS2	NASA/JSC	HOUSTON	UNITED STATES
9.182	SBRI	NASA/JSC	HOUSTON	UNITED STATES
9.183	EPLAB	NASA/JSC	HOUSTON	UNITED STATES
9.19	ESTLRT	NASA/JSC	HOUSTON	UNITED STATES
9.2	JEC	NASA/JSC	HOUSTON	UNITED STATES
9.200	BOU	NASA/JSC	HOUSTON	UNITED STATES
9.22	FDEO	NASA/JSC	HOUSTON	UNITED STATES
9.25	STD	NASA/JSC	HOUSTON	UNITED STATES
9.27	TSD	NASA/JSC	HOUSTON	UNITED STATES
9.3	CTSD1	NASA/JSC	HOUSTON	UNITED STATES
9.30	RADLAB	NASA/JSC	HOUSTON	UNITED STATES
9.31	SN	NASA/JSC	HOUSTON	UNITED STATES
9.32	SNINAA	NASA/JSC	HOUSTON	UNITED STATES
9.33	SDSD	NASA/JSC	HOUSTON	UNITED STATES
9.36	HMF	NASA/JSC	HOUSTON	UNITED STATES
9.37	MEDICS	NASA/JSC	HOUSTON	UNITED STATES
9.38	NMCC	NASA/JSC	HOUSTON	UNITED STATES
9.39	AIO	NASA/JSC	HOUSTON	UNITED STATES
9.42	LPI	NASA/JSC	HOUSTON	UNITED STATES
9.429	MEDIC2	NASA/JSC	HOUSTON	UNITED STATES
9.43	LSPD	NASA/JSC	HOUSTON	UNITED STATES
9.431	SBRI	NASA/JSC	HOUSTON	UNITED STATES
9.432	EPLAB	NASA/JSC	HOUSTON	UNITED STATES
9.45	PPD	NASA/JSC	HOUSTON	UNITED STATES
9.5	ASD	NASA/JSC	HOUSTON	UNITED STATES
9.55	DPSD1	NASA/JSC	HOUSTON	UNITED STATES
9.56	ASTRO	NASA/JSC	HOUSTON	UNITED STATES
9.58	HFL	NASA/JSC	HOUSTON	UNITED STATES
9.59	PLAID1	NASA/JSC	HOUSTON	UNITED STATES
9.6	MSD1	NASA/JSC	HOUSTON	UNITED STATES
9.60	AML	NASA/JSC	HOUSTON	UNITED STATES
9.61	LSDNM	NASA/JSC	HOUSTON	UNITED STATES
9.62	PLAID2	NASA/JSC	HOUSTON	UNITED STATES
9.64	CTDP	NASA/JSC	HOUSTON	UNITED STATES
9.65	CTCM1	NASA/JSC	HOUSTON	UNITED STATES
9.66	CSSL	NASA/JSC	HOUSTON	UNITED STATES
9.7	MSD2	NASA/JSC	HOUSTON	UNITED STATES
9.70	DONALD	NASA/JSC	HOUSTON	UNITED STATES
9.71	ECQPX	NASA/JSC	HOUSTON	UNITED STATES

9.72	CTSD4	NASA/JSC	HOUSTON	UNITED STATES
9.73	CTSD3	NASA/JSC	HOUSTON	UNITED STATES
9.74	CDSD6	NASA/JSC	HOUSTON	UNITED STATES
9.75	RENOIR	NASA/JSC	HOUSTON	UNITED STATES
9.76	HUEY	NASA/JSC	HOUSTON	UNITED STATES
9.77	DEWY	NASA/JSC	HOUSTON	UNITED STATES
9.78	LEWY	NASA/JSC	HOUSTON	UNITED STATES
9.79	CTSD2	NASA/JSC	HOUSTON	UNITED STATES
9.8	TCD	NASA/JSC	HOUSTON	UNITED STATES
9.82	NEWTON	NASA/JSC	HOUSTON	UNITED STATES
9.9	SED	NASA/JSC	HOUSTON	UNITED STATES
7.121	KSCDL1	NASA/KSC	KENNEDY SPACE CENTER	UNITED STATES
7.122	KSCDL2	NASA/KSC	KENNEDY SPACE CENTER	UNITED STATES
7.123	KSCDL3	NASA/KSC	KENNEDY SPACE CENTER	UNITED STATES
7.124	KSCRTR	NASA/KSC	KENNEDY SPACE CENTER	UNITED STATES
7.131	KSCP01	NASA/KSC	KENNEDY SPACE CENTER	UNITED STATES
7.132	KSCP02	NASA/KSC	KENNEDY SPACE CENTER	UNITED STATES
7.133	KSCP03	NASA/KSC	KENNEDY SPACE CENTER	UNITED STATES
7.134	KSCP04	NASA/KSC	KENNEDY SPACE CENTER	UNITED STATES
10.7	HALOE	NASA/LANGLEY	HAMPTON	UNITED STATES
24.129	UADP	NASA/LANGLEY	HAMPTON	UNITED STATES
7.150	HERMIT	NASA/MSFC	HUNTSVILLE	UNITED STATES
7.270	YODA	NASA/MSFC	HUNTSVILLE	UNITED STATES
7.271	CURLY	NASA/MSFC	HUNTSVILLE	UNITED STATES
7.272	GONZO	NASA/MSFC	HUNTSVILLE	UNITED STATES
7.273	ESDC	NASA/MSFC	HUNTSVILLE	UNITED STATES
7.274	SPACE1	NASA/MSFC	HUNTSVILLE	UNITED STATES
7.275	SPACE2	NASA/MSFC	HUNTSVILLE	UNITED STATES
7.276	GARFLD	NASA/MSFC	HUNTSVILLE	UNITED STATES
7.277	ODIE	NASA/MSFC	HUNTSVILLE	UNITED STATES
7.278	EWOK	NASA/MSFC	HUNTSVILLE	UNITED STATES
7.279	OBIWAN	NASA/MSFC	HUNTSVILLE	UNITED STATES
7.28	ATOM	NASA/MSFC	HUNTSVILLE	UNITED STATES
7.31	MAGDAT	NASA/MSFC	HUNTSVILLE	UNITED STATES
7.32	ION	NASA/MSFC	HUNTSVILLE	UNITED STATES
7.33	MAGRPH	NASA/MSFC	HUNTSVILLE	UNITED STATES
7.34	SPB	NASA/MSFC	HUNTSVILLE	UNITED STATES
7.35	SAM	NASA/MSFC	HUNTSVILLE	UNITED STATES
7.37	BOHR	NASA/MSFC	HUNTSVILLE	UNITED STATES
7.38	ROUTER	NASA/MSFC	HUNTSVILLE	UNITED STATES
7.39	SSL	NASA/MSFC	HUNTSVILLE	UNITED STATES
7.76	ISOEOM	NASA/MSFC	HUNTSVILLE	UNITED STATES
6.510	NRAO	NATIONAL RADIO ASTRONOMY OBSERV.	SOCORRO	UNITED STATES
6.513	VAX1	NATIONAL RADIO ASTRONOMY OBSERV.	SOCORRO	UNITED STATES
5.590	NPSOPT	NAVAL POST GRADUATE SCHOOL	MONTEREY	UNITED STATES
9.236	RDSS	NCAR	BOULDER	UNITED STATES
9.237	NPGATE	NCAR	BOULDER	UNITED STATES
9.301	PAMB	NCAR	BOULDER	UNITED STATES
9.303	RAP	NCAR	BOULDER	UNITED STATES
9.344	MMM	NCAR	BOULDER	UNITED STATES
9.346	VMSG	NCAR	BOULDER	UNITED STATES
9.358	AAP1	NCAR	BOULDER	UNITED STATES
9.359	AAP2	NCAR	BOULDER	UNITED STATES
9.363	PARC	NCAR	BOULDER	UNITED STATES
9.364	NSFGW	NCAR	BOULDER	UNITED STATES
9.367	ACDURS	NCAR	BOULDER	UNITED STATES
9.331	CRYOEL	NIST	BOULDER	UNITED STATES
9.339	SELVAX	NIST	BOULDER	UNITED STATES
5.236	DRACO	NOAO	TUCSON	UNITED STATES
7.103	INO	NORDA	STENNIS SPACE CENTER	UNITED STATES
7.205	NORDA3	NORDA	STENNIS SPACE CENTER	UNITED STATES
5.237	VELA	NRAO	TUCSON	UNITED STATES
5.238	WFPCT1	NRAO	TUCSON	UNITED STATES
5.239	WFPCT2	NRAO	TUCSON	UNITED STATES
5.240	GLL1	NRAO	TUCSON	UNITED STATES
5.241	CRUX	NRAO	TUCSON	UNITED STATES

5.242	TUCANA	NRAO	TUCSON	UNITED STATES
11.102	VAXUSR	NRL	WASHINGTON	UNITED STATES
11.2	NRL1	NRL	WASHINGTON	UNITED STATES
11.214	NRLDR1	NRL	WASHINGTON	UNITED STATES
11.230	NRLPLA	NRL	WASHINGTON	UNITED STATES
11.3	NRL2	NRL	WASHINGTON	UNITED STATES
11.38	MV7770	NRL	WASHINGTON	UNITED STATES
11.39	VX7770	NRL	WASHINGTON	UNITED STATES
11.41	VA	NRL	WASHINGTON	UNITED STATES
11.45	VME	NRL	WASHINGTON	UNITED STATES
11.50	LCP	NRL	WASHINGTON	UNITED STATES
11.6	NRL	NRL	WASHINGTON	UNITED STATES
11.70	SSD0	NRL	WASHINGTON	UNITED STATES
11.72	UAP	NRL	WASHINGTON	UNITED STATES
11.84	MAP	NRL	WASHINGTON	UNITED STATES
6.430	PSUMDS	PENN STATE UNIV	UNIV PARK	UNITED STATES
6.431	PSUV01	PENN STATE UNIV	UNIV PARK	UNITED STATES
3.350	PSIKEY	PLANETARY SCIENCE INSTITUTE	TUCSON	UNITED STATES
9.201	RICE	RICE UNIV	HOUSTON	UNITED STATES
3.1	RSMAS	RSMAS	MIAMI	UNITED STATES
3.17	BIGELO	RSMAS	WEST BOOTHBAY HARBOR	UNITED STATES
3.2	MIAMI	RSMAS	MIAMI	UNITED STATES
3.30	PLUTO	RSMAS	MIAMI	UNITED STATES
3.4	THOR	RSMAS	WASHINGTON	UNITED STATES
27.435	LVVA	SAIC	LAS VEGAS	UNITED STATES
27.436	LVVB	SAIC	LAS VEGAS	UNITED STATES
27.437	LVVC	SAIC	LAS VEGAS	UNITED STATES
27.438	LVVD	SAIC	LAS VEGAS	UNITED STATES
27.439	LVVE	SAIC	LAS VEGAS	UNITED STATES
27.440	LVVI	SAIC	LAS VEGAS	UNITED STATES
27.441	LVPCA	SAIC	LAS VEGAS	UNITED STATES
27.455	TUVA	SAIC	TUCSON	UNITED STATES
6.138	STX	SAR	LANHAM	UNITED STATES
27.157	JEDAC	SCRIPPS INST OF OCEANOGRAPHY	LA JOLLA	UNITED STATES
27.166	WAVE	SCRIPPS INST OF OCEANOGRAPHY	LA JOLLA	UNITED STATES
27.1	SDSC	SDSC	SAN DIEGO	UNITED STATES
27.2	LUAC	SDSC	SAN DIEGO	UNITED STATES
27.3	PAGES	SDSC	SAN DIEGO	UNITED STATES
27.5	LOLA	SDSC	SAN DIEGO	UNITED STATES
27.7	M5	SDSC	SAN DIEGO	UNITED STATES
27.8	SDCTSS	SDSC	SAN DIEGO	UNITED STATES
27.9	OLIVER	SDSC	SAN DIEGO	UNITED STATES
6.631	ARGOS6	SERVICE ARGOS INC	LANDOVER	UNITED STATES
6.531	CFA1	SMITHSONIAN ASTROPHY OBSERV.	CAMBRIDGE	UNITED STATES
6.532	CFA2	SMITHSONIAN ASTROPHY OBSERV.	CAMBRIDGE	UNITED STATES
6.533	CFA3	SMITHSONIAN ASTROPHY OBSERV.	CAMBRIDGE	UNITED STATES
6.534	CFA4	SMITHSONIAN ASTROPHY OBSERV.	CAMBRIDGE	UNITED STATES
6.535	CFA5	SMITHSONIAN ASTROPHY OBSERV.	CAMBRIDGE	UNITED STATES
6.536	CFA6	SMITHSONIAN ASTROPHY OBSERV.	CAMBRIDGE	UNITED STATES
6.537	CFA7	SMITHSONIAN ASTROPHY OBSERV.	CAMBRIDGE	UNITED STATES
6.538	CFA8	SMITHSONIAN ASTROPHY OBSERV.	CAMBRIDGE	UNITED STATES
6.539	CFA9	SMITHSONIAN ASTROPHY OBSERV.	CAMBRIDGE	UNITED STATES
6.541	CFAROS	SMITHSONIAN ASTROPHY OBSERV.	CAMBRIDGE	UNITED STATES
6.542	CFACE1	SMITHSONIAN ASTROPHY OBSERV.	CAMBRIDGE	UNITED STATES
6.543	CFAIPO	SMITHSONIAN ASTROPHY OBSERV.	CAMBRIDGE	UNITED STATES
6.544	CFAIRT	SMITHSONIAN ASTROPHY OBSERV.	CAMBRIDGE	UNITED STATES
6.545	CFASHA	SMITHSONIAN ASTROPHY OBSERV.	CAMBRIDGE	UNITED STATES
6.546	CFAFIR	SMITHSONIAN ASTROPHY OBSERV.	CAMBRIDGE	UNITED STATES
6.547	CFATYC	SMITHSONIAN ASTROPHY OBSERV.	CAMBRIDGE	UNITED STATES
6.548	CFARG3	SMITHSONIAN ASTROPHY OBSERV.	CAMBRIDGE	UNITED STATES
6.549	CFABOK	SMITHSONIAN ASTROPHY OBSERV.	CAMBRIDGE	UNITED STATES
6.550	CFAEXI	SMITHSONIAN ASTROPHY OBSERV.	CAMBRIDGE	UNITED STATES
6.551	CFARG1	SMITHSONIAN ASTROPHY OBSERV.	CAMBRIDGE	UNITED STATES
6.552	CFARG2	SMITHSONIAN ASTROPHY OBSERV.	CAMBRIDGE	UNITED STATES
6.553	CFATA1	SMITHSONIAN ASTROPHY OBSERV.	CAMBRIDGE	UNITED STATES
6.554	CFATA2	SMITHSONIAN ASTROPHY OBSERV.	CAMBRIDGE	UNITED STATES

6.555	CFA	SMITHSONIAN ASTROPHY OBSERV.	CAMBRIDGE	UNITED STATES
6.556	CFAPS1	SMITHSONIAN ASTROPHY OBSERV.	CAMBRIDGE	UNITED STATES
6.557	CFAPS2	SMITHSONIAN ASTROPHY OBSERV.	CAMBRIDGE	UNITED STATES
6.558	CFANXT	SMITHSONIAN ASTROPHY OBSERV.	CAMBRIDGE	UNITED STATES
6.559	CFAPS3	SMITHSONIAN ASTROPHY OBSERV.	CAMBRIDGE	UNITED STATES
6.560	CFAPS4	SMITHSONIAN ASTROPHY OBSERV.	CAMBRIDGE	UNITED STATES
6.600	CFAQSF	SMITHSONIAN ASTROPHY OBSERV.	CAMBRIDGE	UNITED STATES
9.291	SWRI	SOUTHWEST RES. INSTITUTE	SAN ANTONIO	UNITED STATES
9.292	SWRIMV	SOUTHWEST RES. INSTITUTE	SAN ANTONIO	UNITED STATES
9.293	SODA	SOUTHWEST RES. INSTITUTE	SAN ANTONIO	UNITED STATES
9.296	SWNMR	SOUTHWEST RES. INSTITUTE	SAN ANTONIO	UNITED STATES
6.405	SCIVAX	SPACE TELESCOPE INSTITUTE	BALTIMORE	UNITED STATES
6.406	KEPLER	SPACE TELESCOPE INSTITUTE	BALTIMORE	UNITED STATES
6.407	NEWT	SPACE TELESCOPE INSTITUTE	BALTIMORE	UNITED STATES
6.410	RPS	SPACE TELESCOPE INSTITUTE	BALTIMORE	UNITED STATES
6.411	FOCA	SPACE TELESCOPE INSTITUTE	BALTIMORE	UNITED STATES
6.412	FOCB	SPACE TELESCOPE INSTITUTE	BALTIMORE	UNITED STATES
6.413	LOKI	SPACE TELESCOPE INSTITUTE	BALTIMORE	UNITED STATES
6.414	FOSA	SPACE TELESCOPE INSTITUTE	BALTIMORE	UNITED STATES
6.416	WFPCST	SPACE TELESCOPE INSTITUTE	BALTIMORE	UNITED STATES
6.417	RSB	SPACE TELESCOPE INSTITUTE	BALTIMORE	UNITED STATES
6.419	MOSS1	SPACE TELESCOPE INSTITUTE	BALTIMORE	UNITED STATES
6.420	ELAN	SPACE TELESCOPE INSTITUTE	BALTIMORE	UNITED STATES
6.427	STSCI	SPACE TELESCOPE INSTITUTE	BALTIMORE	UNITED STATES
6.476	AMBER	SPACE TELESCOPE INSTITUTE	BALTIMORE	UNITED STATES
6.478	AVALON	SPACE TELESCOPE INSTITUTE	BALTIMORE	UNITED STATES
7.45	STAR	STANFORD UNIV	STANFORD	UNITED STATES
7.46	SPOCK	STANFORD UNIV	STANFORD	UNITED STATES
7.47	MCCOY	STANFORD UNIV	STANFORD	UNITED STATES
7.48	SOLAR	STANFORD UNIV	STANFORD	UNITED STATES
7.49	STAR1	STANFORD UNIV	STANFORD	UNITED STATES
7.50	SCOTTY	STANFORD UNIV	STANFORD	UNITED STATES
7.51	PRO2	STANFORD UNIV	STANFORD	UNITED STATES
7.52	LAUREL	STANFORD UNIV	STANFORD	UNITED STATES
7.53	HARDY	STANFORD UNIV	STANFORD	UNITED STATES
7.54	APOLLO	STANFORD UNIV	STANFORD	UNITED STATES
7.55	ATHENE	STANFORD UNIV	STANFORD	UNITED STATES
9.210	TAMOCN	TEXAS A & M UNIV	COLLEGE STATION	UNITED STATES
5.298	DIRAC2	THE AEROSPACE CORPORATION	LOS ANGELES	UNITED STATES
5.320	HYRAX	THE RAND CORPORATION	SANTA MONICA	UNITED STATES
5.257	ATD1	TRW INC.	REDONDO BEACH	UNITED STATES
5.258	TRWSSD	TRW INC.	REDONDO BEACH	UNITED STATES
5.259	ATD2	TRW INC.	REDONDO BEACH	UNITED STATES
5.260	TRWPSP	TRW INC.	REDONDO BEACH	UNITED STATES
5.104	GRUMPY	UCLA	LOS ANGELES	UNITED STATES
5.701	VXBMS	UCLA	LOS ANGELES	UNITED STATES
5.706	BRUNET	UCLA	LOS ANGELES	UNITED STATES
5.708	BONNIE	UCLA	LOS ANGELES	UNITED STATES
5.709	CLYDE	UCLA	LOS ANGELES	UNITED STATES
5.712	FSCARF	UCLA	LOS ANGELES	UNITED STATES
5.719	THEVAX	UCLA	LOS ANGELES	UNITED STATES
5.722	MIRA	UCLA	LOS ANGELES	UNITED STATES
5.723	RIGEL	UCLA	LOS ANGELES	UNITED STATES
5.725	UCLAUE	UCLA	LOS ANGELES	UNITED STATES
7.11	CSPARA	UNIV OF ALABAMA-HUNTSVILLE	HUNTSVILLE	UNITED STATES
7.25	CSPARC	UNIV OF ALABAMA-HUNTSVILLE	HUNTSVILLE	UNITED STATES
7.26	SPARC	UNIV OF ALABAMA-HUNTSVILLE	HUNTSVILLE	UNITED STATES
7.27	METEOR	UNIV OF ALABAMA-HUNTSVILLE	HUNTSVILLE	UNITED STATES
7.29	OAL23A	UNIV OF ALABAMA-HUNTSVILLE	HUNTSVILLE	UNITED STATES
7.30	UAHOAL	UNIV OF ALABAMA-HUNTSVILLE	HUNTSVILLE	UNITED STATES
7.40	OPTICS	UNIV OF ALABAMA-HUNTSVILLE	HUNTSVILLE	UNITED STATES
7.75	USUISO	UNIV OF ALABAMA-HUNTSVILLE	HUNTSVILLE	UNITED STATES
5.264	FRED	UNIV OF ALASKA/GEOPHYSICAL INST	FAIRBANKS	UNITED STATES
5.265	SPACE	UNIV OF ALASKA/GEOPHYSICAL INST	FAIRBANKS	UNITED STATES
5.266	BARNEY	UNIV OF ALASKA/GEOPHYSICAL INST	FAIRBANKS	UNITED STATES
5.280	LOONEY	UNIV OF ARIZONA	TUCSON	UNITED STATES

5.281	CCPVQR	UNIV OF ARIZONA	TUCSON	UNITED STATES
5.289	UCBSP	UNIV OF CALIF/BERKELEY	BERKELEY	UNITED STATES
27.1023	CAFDS0	UNIV OF CALIF/IRVINE	IRVINE	UNITED STATES
27.201	UCIAST	UNIV OF CALIF/IRVINE	IRVINE	UNITED STATES
27.204	CAFMV2	UNIV OF CALIF/IRVINE	IRVINE	UNITED STATES
27.278	UCIHWH	UNIV OF CALIF/IRVINE	IRVINE	UNITED STATES
27.287	UCIQCD	UNIV OF CALIF/IRVINE	IRVINE	UNITED STATES
27.289	CAFMV1	UNIV OF CALIF/IRVINE	IRVINE	UNITED STATES
27.351	UCRAC1	UNIV OF CALIF/RIVERSIDE	RIVERSIDE	UNITED STATES
27.352	UCRAC2	UNIV OF CALIF/RIVERSIDE	RIVERSIDE	UNITED STATES
27.353	UCRAC3	UNIV OF CALIF/RIVERSIDE	RIVERSIDE	UNITED STATES
27.354	UCRAC4	UNIV OF CALIF/RIVERSIDE	RIVERSIDE	UNITED STATES
27.355	UCRAC5	UNIV OF CALIF/RIVERSIDE	RIVERSIDE	UNITED STATES
27.356	UCRWS	UNIV OF CALIF/RIVERSIDE	RIVERSIDE	UNITED STATES
27.357	UCRDJ	UNIV OF CALIF/RIVERSIDE	RIVERSIDE	UNITED STATES
27.358	UCRBV	UNIV OF CALIF/RIVERSIDE	RIVERSIDE	UNITED STATES
27.359	UCRPC1	UNIV OF CALIF/RIVERSIDE	RIVERSIDE	UNITED STATES
27.366	UCRPC8	UNIV OF CALIF/RIVERSIDE	RIVERSIDE	UNITED STATES
27.367	UCRBC1	UNIV OF CALIF/RIVERSIDE	RIVERSIDE	UNITED STATES
27.368	UCRCH1	UNIV OF CALIF/RIVERSIDE	RIVERSIDE	UNITED STATES
27.369	UCRCS	UNIV OF CALIF/RIVERSIDE	RIVERSIDE	UNITED STATES
27.370	UCR	UNIV OF CALIF/RIVERSIDE	RIVERSIDE	UNITED STATES
27.371	UCRPH1	UNIV OF CALIF/RIVERSIDE	RIVERSIDE	UNITED STATES
27.372	UCRPH2	UNIV OF CALIF/RIVERSIDE	RIVERSIDE	UNITED STATES
27.373	UCRPH3	UNIV OF CALIF/RIVERSIDE	RIVERSIDE	UNITED STATES
27.375	UCRPH5	UNIV OF CALIF/RIVERSIDE	RIVERSIDE	UNITED STATES
27.377	UCRPH7	UNIV OF CALIF/RIVERSIDE	RIVERSIDE	UNITED STATES
37.379	UCRPHY	UNIV OF CALIF/RIVERSIDE	RIVERSIDE	UNITED STATES
27.130	CASS	UNIV OF CALIF/SAN DIEGO	LA JOLLA	UNITED STATES
27.131	CASS01	UNIV OF CALIF/SAN DIEGO	LA JOLLA	UNITED STATES
27.140	SDCC1	UNIV OF CALIF/SAN DIEGO	LA JOLLA	UNITED STATES
27.141	SDCC2	UNIV OF CALIF/SAN DIEGO	LA JOLLA	UNITED STATES
27.142	SDCC4	UNIV OF CALIF/SAN DIEGO	LA JOLLA	UNITED STATES
27.143	SDCC5	UNIV OF CALIF/SAN DIEGO	LA JOLLA	UNITED STATES
27.144	SDCC8	UNIV OF CALIF/SAN DIEGO	LA JOLLA	UNITED STATES
27.150	SSURF	UNIV OF CALIF/SAN DIEGO	LA JOLLA	UNITED STATES
27.174	SDPH	UNIV OF CALIF/SAN DIEGO	LA JOLLA	UNITED STATES
27.175	SDPSL0	UNIV OF CALIF/SAN DIEGO	LA JOLLA	UNITED STATES
27.4	SDS	UNIV OF CALIF/SAN DIEGO	SAN DIEGO	UNITED STATES
5.294	UCMBO	UNIV OF CALIF/SANTA BARBARA	SANTA BARBARA	UNITED STATES
7.20	LASR	UNIV OF CHICAGO	CHICAGO	UNITED STATES
33.61	BALI	UNIV OF COLORADO	DENVER	UNITED STATES
33.161	NILAS	UNIV OF COLORADO-BOULDER	BOULDER	UNITED STATES
33.21	ARIES	UNIV OF COLORADO-BOULDER	BOULDER	UNITED STATES
33.22	ORION	UNIV OF COLORADO-BOULDER	BOULDER	UNITED STATES
33.25	AQUILA	UNIV OF COLORADO-BOULDER	BOULDER	UNITED STATES
33.250	KRYOS	UNIV OF COLORADO-BOULDER	BOULDER	UNITED STATES
33.251	GPXICE	UNIV OF COLORADO-BOULDER	BOULDER	UNITED STATES
33.252	PHOTON	UNIV OF COLORADO-BOULDER	BOULDER	UNITED STATES
33.256	RASTER	UNIV OF COLORADO-BOULDER	BOULDER	UNITED STATES
33.26	PISCES	UNIV OF COLORADO-BOULDER	BOULDER	UNITED STATES
33.28	VIRGO	UNIV OF COLORADO-BOULDER	BOULDER	UNITED STATES
33.29	DENEB	UNIV OF COLORADO-BOULDER	BOULDER	UNITED STATES
33.30	SPICA	UNIV OF COLORADO-BOULDER	BOULDER	UNITED STATES
33.31	VESTA	UNIV OF COLORADO-BOULDER	BOULDER	UNITED STATES
33.319	SANDOR	UNIV OF COLORADO-BOULDER	BOULDER	UNITED STATES
33.32	LYNX	UNIV OF COLORADO-BOULDER	BOULDER	UNITED STATES
33.321	SARIN	UNIV OF COLORADO-BOULDER	BOULDER	UNITED STATES
33.332	GALAXY	UNIV OF COLORADO-BOULDER	BOULDER	UNITED STATES
33.333	CASA	UNIV OF COLORADO-BOULDER	BOULDER	UNITED STATES
33.334	HAIL	UNIV OF COLORADO-BOULDER	BOULDER	UNITED STATES
33.337	TYCHO	UNIV OF COLORADO-BOULDER	BOULDER	UNITED STATES
33.338	VULCAN	UNIV OF COLORADO-BOULDER	BOULDER	UNITED STATES
33.34	ZODIAC	UNIV OF COLORADO-BOULDER	BOULDER	UNITED STATES
33.35	CYGNUS	UNIV OF COLORADO-BOULDER	BOULDER	UNITED STATES
33.36	LMCX1	UNIV OF COLORADO-BOULDER	BOULDER	UNITED STATES

33.37	TAURUS	UNIV OF COLORADO-BOULDER	BOULDER	UNITED STATES
33.39	CYGX1	UNIV OF COLORADO-BOULDER	BOULDER	UNITED STATES
33.40	HYADES	UNIV OF COLORADO-BOULDER	BOULDER	UNITED STATES
33.46	ILLITE	UNIV OF COLORADO-BOULDER	BOULDER	UNITED STATES
33.47	ALBEDO	UNIV OF COLORADO-BOULDER	BOULDER	UNITED STATES
33.48	KAOLIN	UNIV OF COLORADO-BOULDER	BOULDER	UNITED STATES
33.70	UCBRTØ	UNIV OF COLORADO-BOULDER	BOULDER	UNITED STATES
33.71	THALIA	UNIV OF COLORADO-BOULDER	BOULDER	UNITED STATES
33.73	VEGA	UNIV OF COLORADO-BOULDER	BOULDER	UNITED STATES
33.74	MAIA	UNIV OF COLORADO-BOULDER	BOULDER	UNITED STATES
33.76	ALGOL	UNIV OF COLORADO-BOULDER	BOULDER	UNITED STATES
33.81	SCOX1	UNIV OF COLORADO-BOULDER	BOULDER	UNITED STATES
33.83	ARLAC	UNIV OF COLORADO-BOULDER	BOULDER	UNITED STATES
33.84	CARINA	UNIV OF COLORADO-BOULDER	BOULDER	UNITED STATES
33.87	ELROY	UNIV OF COLORADO-BOULDER	BOULDER	UNITED STATES
33.90	SOLARX	UNIV OF COLORADO-BOULDER	BOULDER	UNITED STATES
33.99	CUBLDR	UNIV OF COLORADO-BOULDER	BOULDER	UNITED STATES
33.60	FIJI	UNIV OF COLORADO-DENVER	DENVER	UNITED STATES
6.145	DELOCN	UNIV OF DELAWARE	LEWES	UNITED STATES
6.216	BARTOL	UNIV OF DELAWARE	NEWARK	UNITED STATES
5.270	HAWAII	UNIV OF HAWAII/GEOPHYSICS INST	HONOLULU	UNITED STATES
7.172	DEPWI	UNIV OF IOWA	IOWA CITY	UNITED STATES
7.174	DENALI	UNIV OF IOWA	IOWA CITY	UNITED STATES
7.61	AURORA	UNIV OF IOWA	IOWA CITY	UNITED STATES
7.62	CERES	UNIV OF IOWA	IOWA CITY	UNITED STATES
7.63	IOWASP	UNIV OF IOWA	IOWA CITY	UNITED STATES
7.64	IOWA	UNIV OF IOWA	IOWA CITY	UNITED STATES
7.220	KUPHSX	UNIV OF KANSAS	LAWRENCE	UNITED STATES
7.225	KUMGM	UNIV OF KANSAS	LAWRENCE	UNITED STATES
6.400	UMDSW	UNIV OF MARYLAND	COLLEGE PARK	UNITED STATES
6.401	UMDUAP	UNIV OF MARYLAND	COLLEGE PARK	UNITED STATES
6.402	UMDSP	UNIV OF MARYLAND	COLLEGE PARK	UNITED STATES
6.403	UMDSPA	UNIV OF MARYLAND	COLLEGE PARK	UNITED STATES
6.460	UMAIP	UNIV OF MARYLAND	COLLEGE PARK	UNITED STATES
6.461	LOCAL	UNIV OF MARYLAND	COLLEGE PARK	UNITED STATES
6.462	IMAGE	UNIV OF MARYLAND	COLLEGE PARK	UNITED STATES
6.463	RANGE	UNIV OF MARYLAND	COLLEGE PARK	UNITED STATES
6.464	IMG	UNIV OF MARYLAND	COLLEGE PARK	UNITED STATES
6.466	MARVEL	UNIV OF MARYLAND	COLLEGE PARK	UNITED STATES
6.468	UMDHEP	UNIV OF MARYLAND	COLLEGE PARK	UNITED STATES
6.469	LIONEL	UNIV OF MARYLAND	COLLEGE PARK	UNITED STATES
6.470	UMDENP	UNIV OF MARYLAND	COLLEGE PARK	UNITED STATES
6.471	CPWANG	UNIV OF MARYLAND	COLLEGE PARK	UNITED STATES
3.70	ISPIR1	UNIV OF MIAMI	CORAL GABLES	UNITED STATES
3.73	ELVIS	UNIV OF MIAMI	CORAL GABLES	UNITED STATES
3.74	GABLES	UNIV OF MIAMI	CORAL GABLES	UNITED STATES
3.76	UMIAMI	UNIV OF MIAMI	CORAL GABLES	UNITED STATES
3.89	PHYVAX	UNIV OF MIAMI	CORAL GABLES	UNITED STATES
7.135	ATSVAX	UNIV OF MIAMI-PALM BAY	PALM BAY	UNITED STATES
7.82	BATSE	UNIV OF MICHIGAN	ANN ARBOR	UNITED STATES
7.85	SPRLA	UNIV OF MICHIGAN	ANN ARBOR	UNITED STATES
7.86	SPRLB	UNIV OF MICHIGAN	ANN ARBOR	UNITED STATES
7.90	SPRLC	UNIV OF MICHIGAN	ANN ARBOR	UNITED STATES
7.91	SPRLF	UNIV OF MICHIGAN	ANN ARBOR	UNITED STATES
7.92	SPRLD	UNIV OF MICHIGAN	ANN ARBOR	UNITED STATES
7.151	WAVES	UNIV OF MINNESOTA	MINNEAPOLIS	UNITED STATES
6.721	UNHRCC	UNIV OF NEW HAMPSHIRE	DURHAM	UNITED STATES
6.180	URI	UNIV OF RHODE ISLAND	NARRAGANSETT	UNITED STATES
6.181	DSPLY1	UNIV OF RHODE ISLAND	NARRAGANSETT	UNITED STATES
6.182	DSPLY2	UNIV OF RHODE ISLAND	NARRAGANSETT	UNITED STATES
6.183	RWATTS	UNIV OF RHODE ISLAND	NARRAGANSETT	UNITED STATES
6.185	CBEAM	UNIV OF RHODE ISLAND	NARRAGANSETT	UNITED STATES
6.194	CHM2	UNIV OF RHODE ISLAND	KINGSTON	UNITED STATES
6.195	URIGSO	UNIV OF RHODE ISLAND	NARRAGANSETT	UNITED STATES
6.199	MARGEO	UNIV OF RHODE ISLAND	KINGSTON	UNITED STATES
25.213	THENIC	UNIV OF TEXAS	AUSTIN	UNITED STATES

25.40	UTADNX	UNIV OF TEXAS	AUSTIN	UNITED STATES
25.128	UTSPAN	UNIV OF TEXAS-AUSTIN	AUSTIN	UNITED STATES
9.261	UTD750	UNIV OF TEXAS-DALLAS	RICHARDSON	UNITED STATES
5.333	MOTHRA	UNIV OF WASHINGTON	SEATTLE	UNITED STATES
7.141	MADRAF	UNIV OF WISCONSIN	MADISON	UNITED STATES
7.142	UWFPC	UNIV OF WISCONSIN	MADISON	UNITED STATES
7.143	UWSAL	UNIV OF WISCONSIN	MADISON	UNITED STATES
7.44	LAMPS	UNIVERSITIES SPACE RESEARCH ASSOC	HUNTSVILLE	UNITED STATES
6.215	NODC	US DEPT OF COMMERCE/NOAA/NESDIS/NODC	WASHINGTON	UNITED STATES
6.375	ODC80	US DEPT OF COMMERCE/NOAA/NESDIS/NODC	WASHINGTON	UNITED STATES
24.252	MOG	USGS	PALO ALTO	UNITED STATES
24.253	DISCO	USGS	PALO ALTO	UNITED STATES
24.255	MADMAX	USGS	MENLO PARK	UNITED STATES
5.301	ASTROG	USGS	FLAGSTAFF	UNITED STATES
7.189	EROSA	USGS/EROS DATA CENTER	SIOUX FALLS	UNITED STATES
7.161	USUJRD	UTAH STATE UNIV	LOGAN	UNITED STATES
7.70	USU	UTAH STATE UNIV	LOGAN	UNITED STATES
7.80	USUMVA	UTAH STATE UNIV	LOGAN	UNITED STATES
7.300	WURST	WASHINGTON UNIV	ST. LOUIS	UNITED STATES
7.301	WUMV1	WASHINGTON UNIV	ST. LOUIS	UNITED STATES
7.302	WUPRO	WASHINGTON UNIV	ST. LOUIS	UNITED STATES
7.303	WUINAA	WASHINGTON UNIV	ST. LOUIS	UNITED STATES
7.304	WUMV2	WASHINGTON UNIV	ST. LOUIS	UNITED STATES
6.151	RED	WOODS HOLE OCEANOGRAPHIC INSTITUTION	WOODS HOLE	UNITED STATES
6.152	BLUE	WOODS HOLE OCEANOGRAPHIC INSTITUTION	WOODS HOLE	UNITED STATES
6.153	WHITE	WOODS HOLE OCEANOGRAPHIC INSTITUTION	WOODS HOLE	UNITED STATES
6.154	GRAY	WOODS HOLE OCEANOGRAPHIC INSTITUTION	WOODS HOLE	UNITED STATES
6.155	BLACK	WOODS HOLE OCEANOGRAPHIC INSTITUTION	WOODS HOLE	UNITED STATES
6.156	GREEN	WOODS HOLE OCEANOGRAPHIC INSTITUTION	WOODS HOLE	UNITED STATES
6.159	CLAMS	WOODS HOLE OCEANOGRAPHIC INSTITUTION	WOODS HOLE	UNITED STATES
6.160	TAN	WOODS HOLE OCEANOGRAPHIC INSTITUTION	WOODS HOLE	UNITED STATES
6.161	PLUM	WOODS HOLE OCEANOGRAPHIC INSTITUTION	WOODS HOLE	UNITED STATES
6.162	GOLD	WOODS HOLE OCEANOGRAPHIC INSTITUTION	WOODS HOLE	UNITED STATES
6.163	PUCE	WOODS HOLE OCEANOGRAPHIC INSTITUTION	WOODS HOLE	UNITED STATES
6.164	AQUA	WOODS HOLE OCEANOGRAPHIC INSTITUTION	WOODS HOLE	UNITED STATES
6.165	SILVER	WOODS HOLE OCEANOGRAPHIC INSTITUTION	WOODS HOLE	UNITED STATES
6.166	CTD03	WOODS HOLE OCEANOGRAPHIC INSTITUTION	WOODS HOLE	UNITED STATES
6.167	SLATE	WOODS HOLE OCEANOGRAPHIC INSTITUTION	WOODS HOLE	UNITED STATES
6.168	CTD02	WOODS HOLE OCEANOGRAPHIC INSTITUTION	WOODS HOLE	UNITED STATES
6.169	BRONZE	WOODS HOLE OCEANOGRAPHIC INSTITUTION	WOODS HOLE	UNITED STATES
6.170	THISLE	WOODS HOLE OCEANOGRAPHIC INSTITUTION	WOODS HOLE	UNITED STATES
6.171	SPANKY	WOODS HOLE OCEANOGRAPHIC INSTITUTION	WOODS HOLE	UNITED STATES
6.172	TOGA	WOODS HOLE OCEANOGRAPHIC INSTITUTION	WOODS HOLE	UNITED STATES
6.173	NEFC01	WOODS HOLE OCEANOGRAPHIC INSTITUTION	WOODS HOLE	UNITED STATES
6.174	TWEED	WOODS HOLE OCEANOGRAPHIC INSTITUTION	WOODS HOLE	UNITED STATES
6.176	CANAL1	WOODS HOLE OCEANOGRAPHIC INSTITUTION	WOODS HOLE	UNITED STATES
28.304	EMBL	EUROPEAN MOLECULAR BIOLOGY LABORATORY	6900 HEIDELBERG	WEST GERMANY
28.305	ALKOR	EUROPEAN MOLECULAR BIOLOGY LABORATORY	6900 HEIDELBERG	WEST GERMANY
28.82	ESOMC1	EUROPEAN SOUTHERN OBSERVATORY	GARCHING-BEI-MUENCHE	WEST GERMANY
28.1	ECD1	EUROPEAN SPACE OPERATIONS CENTRE	6100 DARMSTADT	WEST GERMANY
28.161	DDEPE5	INSTITUTE FOR OPTOELECTRONICS	8031 OBERPFAFFENHOFE	WEST GERMANY
28.350	LINMPI	MAX PLANCK INST FUER AERONOMIE	LINDAU(HARZ)	WEST GERMANY
28.101	MPE	MAX PLANCK INST FUER ASTROPHYSIK	8046 GARCHING	WEST GERMANY
28.102	MPEX1	MAX PLANCK INST FUER ASTROPHYSIK	8046 GARCHING	WEST GERMANY
28.104	MPEI1	MAX PLANCK INST FUER ASTROPHYSIK	8046 GARCHING	WEST GERMANY
28.107	MPEI2	MAX PLANCK INST FUER ASTROPHYSIK	8046 GARCHING	WEST GERMANY
28.201	NB11	MAX PLANCK INST FUER KERNPHYSIK	6900 HEIDELBERG	WEST GERMANY
28.203	CHAOS0	MAX PLANCK INST FUER KERNPHYSIK	6900 HEIDELBERG	WEST GERMANY
28.204	FRANNY	MAX PLANCK INST FUER KERNPHYSIK	6900 HEIDELBERG	WEST GERMANY
28.205	ZOOEY	MAX PLANCK INST FUER KERNPHYSIK	6900 HEIDELBERG	WEST GERMANY
28.206	VAMPI	MAX PLANCK INST FUER KERNPHYSIK	6900 HEIDELBERG	WEST GERMANY
28.220	HERING	MAX PLANCK INST FUER KERNPHYSIK	6900 HEIDELBERG	WEST GERMANY
28.221	UXNHD3	MAX PLANCK INST FUER KERNPHYSIK	6900 HEIDELBERG	WEST GERMANY
28.222	CBZEUS	MAX PLANCK INST FUER KERNPHYSIK	6900 HEIDELBERG	WEST GERMANY
28.223	DUSTY	MAX PLANCK INST FUER KERNPHYSIK	6900 HEIDELBERG	WEST GERMANY
28.224	IGOR	MAX PLANCK INST FUER KERNPHYSIK	6900 HEIDELBERG	WEST GERMANY

28.225	NA34	MAX PLANCK INST FUER KERNPHYSIK	6900 HEIDELBERG	WEST GERMANY
28.226	ZYKLOP	MAX PLANCK INST FUER KERNPHYSIK	6900 HEIDELBERG	WEST GERMANY
28.228	WRF	MAX PLANCK INST FUER KERNPHYSIK	6900 HEIDELBERG	WEST GERMANY
28.229	WILLI	MAX PLANCK INST FUER KERNPHYSIK	6900 HEIDELBERG	WEST GERMANY
28.289	WOWERI	MAX PLANCK INST FUER KERNPHYSIK	6900 HEIDELBERG	WEST GERMANY
28.290	MORITZ	MAX PLANCK INST FUER KERNPHYSIK	6900 HEIDELBERG	WEST GERMANY
28.291	EKJ	MAX PLANCK INST FUER KERNPHYSIK	6900 HEIDELBERG	WEST GERMANY
28.292	OLLI	MAX PLANCK INST FUER KERNPHYSIK	6900 HEIDELBERG	WEST GERMANY
28.293	BARON	MAX PLANCK INST FUER KERNPHYSIK	6900 HEIDELBERG	WEST GERMANY
28.294	URMI	MAX PLANCK INST FUER KERNPHYSIK	6900 HEIDELBERG	WEST GERMANY
28.295	PIXE	MAX PLANCK INST FUER KERNPHYSIK	6900 HEIDELBERG	WEST GERMANY
28.296	KRAKO	MAX PLANCK INST FUER KERNPHYSIK	6900 HEIDELBERG	WEST GERMANY
28.297	OLIVER	MAX PLANCK INST FUER KERNPHYSIK	6900 HEIDELBERG	WEST GERMANY
28.299	REZIM	MAX PLANCK INST FUER KERNPHYSIK	6900 HEIDELBERG	WEST GERMANY
28.800	AIBONN	UNIV OF BONN	BONN 1	WEST GERMANY
28.151	IFKKI	UNIV OF KIEL	2300 KIEL	WEST GERMANY

IV. Remote Site Manager List

A. Remote Site Manager Contact List (Index Sorted by Institution)

Institution	Contact Name	Contact Mail Address	Contact Phone Number	SPAN Routing Center
Air Force Geophysics Laboratory (AFGL)	Mike Houle	AFGLSC::HOULE	617/377-2411	GSFC
Ames Research Center (ARC)	Mike Rodericks	SAT::SYSTEM	414/694-6923	JPL
Applied Physics Laboratory (APL)	Lors Suther	APLSP::SUTHER	301/953-5000 (x8412)	GSFC
Arizona State University	Don Anderson	ASUIPF::ANDERSON	602/965-6336	JPL
Augsburg College	Mark Engebretson	AUGGIE::SYSTEM	612/330-1067	MSFC
Bartol Research Foundation	Paul Evanson	BARTOL::PENGUIN	302/451-8111	GSFC
Bendix Field Engineering	David R. Fink	BFEC3::SYSDRF	301/964-7673	GSFC
Boston University	David Bradford	BUASTA::BRADFORD	617/353-4884	GSFC
Brown University	Rob Demillo	BRNLPSG::RD	401/863-3769	JPL
California Institute of Technology (CalTech)	Dan Zirin	HAMLET::ZAR	818/356/6861	JPL
Canadian Data Analysis Network	Daniel Servranckx	CANOTT::ACTION	613/990-0805	GSFC
Centre de Recherche en Physique de l'Environment (CRPE)	Edmond Pawela	CRPEIS::PAWELA	+33-1-4529-4602	ESOC
Cerro Tololo Inter-American Observatory	Jim Hughes	CTIOV1::SYSTEM	+011-56-51-213-352 (x236)	GSFC
Continuous Electron Beam Acceleration Facility (CEBAF)	Richard Glass	CEBAF1::GLASS	804/249-7100	GSFC
Cornell University	Brian Carcich	CUSPIF::CARCICH	607/255-5908	GSFC
Dartmouth College	Doug Frazer	T1::DOUGF	603/646-3522	GSFC
Department of Plasma Physics, KTH	Bengt H. Nilsson	ESRIN2::PLAFYS::NILSSON	+46-8-7907693	ESOC
Earth Resources Observation Systems (EROS) Data Center	Tom Bodah	EROSA::SYSTEM	FTS 784-7830	MSFC
Earthnet Programme Office	Martin Spence	EPO780::SPENCE	+39-6-94180420	ESOC
European Molecular Biology Laboratory (EMBL)	Roy Ormond	EMBL::ORMOND	+49-6221-387-248	ESOC
European Southern Observatory	Charlie Dunnas	ESOMC1::DUNNAS	+49-89-32006-360	ESOC
European Space Agency, Headquarters	Gerbrand Veldman	ESAHQ0::GVELDMAN	+33-14273-7654	ESOC
European Space Operations Center (ESOC)	Jenny Franks	ECD1::NETMGR	+49-6151-886-297	ESOC
European Space Research and Technology Center (ESTEC)	Gerbrand Veldman	ESTCS1::GVELDMAN	+31-1719-83120	ESOC
European Space Research Institute (ESRIN)	Jordi Pascual	ESIS::NETMGR	+39-6-94180438	ESOC
Exosat Observatory	Guenter Thoerner	EXOSAT::SYSTEM	+49-1718-84218	ESOC
Florida State University	Tom Kitterman	METDAT::TWK	904/644-4488	MSFC
Food and Agriculture Organisation (FAO) of the U.N.	K. Mead	FAO::SYSTEM	+39-6-5797-4744	ESOC
German Aerospace Research Establishment	Manfred Exner	MUSC2::SYSTEM	+49-2203-601-3046	ESOC
German Space Operation Center	Martin Pilgram	GSOC1::PILGRAM	+49-8153-281266	ESOC
Goddard Space Flight Center (GSFC)	Todd Butler	NCF::TBUTLER	301/286-7251	GSFC
Goddard Space Flight Center/Local Area Communications Network (GSFC/LACN)	Jerome Bennett	SDCDCL::BENNETT	301/286-4655	GSFC
Grumman Corporate Research Center	Nance Jennerich	NSSDCA::CRCVAX::SYSTEM	516/346-6147	GSFC
International Ultraviolet Explorer (IUE) Observatory	Francisco Marcelo	VILSPA::SYS	+34-1401-9661	ESOC
Institut d'Astrophysics de Paris	Diego Cesarski	IAPOBS::DIEGO	+33-1-4320-1425	ESOC
Institute for Optoelectronics	Gerd Enderlein	OOEPE6::SYSTEM	+49-8153-28789	ESOC
Instituto de Astrofisica de Canarias	Pedro Martin	IAC::SYSTEM	+34-22-262211	ESOC

Institution	Contact Name	Contact Mail Address	Contact Phone Number	SPAN Routing Center
Istituto di Fisica dello Spazio Interplanetario (IFSI)	Cecilia Ceccarelli	IFSI::CECILIA	+39-6-9423801	ESOC
Istituto Nazionale di Fisica Nucleare (INFN)	Massimo Pistoni	VAXLNF::MASSIMO	+39-6-9403340	ESOC
Jet Propulsion Laboratory (JPL)	Sanford George	JPLNG::GEORGE	818/354-4334	JPL
Johnson Space Center (JSC)	Dan Anderson	SN::DAN	713/483-5144	JPL
Kennedy Space Center	Mark Juhr	KSCDL1::JUHR	305/867-3127	MSFC
Kyoto University	Toyo Kamei	NSSDCA::PSI%KYOTO::TOYO	+81-75-722-0865	GSFC
Lockheed Palo Alto Research Laboratories	Dayton Datlowe	LOCKHD::NETMGR	415/424-3274	JPL
Los Alamos National Laboratories	Steve Blair	ESSDP2::089804	505/667-9211	JPL
Louisiana State University (LSU)	T. Gregory Guzik	LSU0WS::GUZIK	504/388-8597	MSFC
Lunar and Planetary Institute	Kinpong Leung	LPI::LEUNG	713/486-2165	JPL
Marshall Space Flight Center (MSFC)	Ann Beckman	SSL::BECKMAN	205/544-7668	MSFC
Massachusetts Institute of Technology (MIT)	Diane Spiegel	6394::SYSTEM	617/253-5935	GSFC
Max Planck Institute for Aeronomy	Hans-Juergen Mueller	LINMPI::MUELLER	+49-555-641-301	ESOC
Max Planck Institute for Extraterrestrial Physics	Karlheinz Muehlaeuser	MPE::KZM	+49-89-3299-520	ESOC
Max Planck Institute for Nuclear Physics	Hans-Werner Heyng	UXNHD3::HWH	+48-6221-516245	ESOC
NASA Headquarters	Mike Newell	POLLUX::MNEWELL	202/453-8752	GSFC
NASA Science Management Information	Harrell Phillips	MIPS1::SYSTEM	305/867-7897	MSFC
National Center for Atmospheric Research (NCAR)	Basil Irwin	AAP2::IRWIN	303/497-1261	JPL
National Oceanic and Atmospheric Administration/National Bureau of Standards (NOAA/NIST)	Jim Winkelman	CRYOEL::WINKELMAN	303/497-3283	JPL
National Optical Astronomy Observatory (NOAO)	Steve Grandi	DRACO::GRANDI	602/325-9228	JPL
National Radio Astronomy Observatory (NRAO)	Al Braun	NRAO::ABRAUN	505/772-4335	GSFC
Naval Ocean Research and Development Activity (NORDA)	DeeDee Garcia	INO::NETMAN	601/688-4827	MSFC
Naval Postgraduate School	James Mueller		408/646-3266	JPL
Naval Research Laboratory (NRL)	Paul Lang	11314::LANG	202/767-3903	GSFC
Observatoire Astronomique de Strasbourg	Francois Bonnarel	CDSXB1::SYSTEM	+33-88358219	ESOC
Observatoire de Paris-Meudon	Sylviane Chaintreuil	MEUDON::SYSTEM	+33-1-45007-7669	ESOC
Osservatorio Astronomico di Roma			+06/347056-3452656	ESOC
Osservatorio Astronomico di Trieste	Fabio Pasian	ESRIN1::ASTRTS::PASIAN	+040-309390/309342/768005	ESOC
Oregon State University	E. L. Beals	OSUVAX::BEALS	503/754-4017	JPL
Osservatorio Astronomico di Roma Sede di Monte Perzio	Domenico Nanni	ASTRMP::NANNI	+39-6-9449019	ESOC
Pennsylvania State University	Paul Sharum	PSUV01::SHARUM	814/863-1037	GSFC
Planetary Science Institute				JPL
RAND Santa Monica	Tim Colvin	HYRAX::COLVIN	213/393-0411	JPL
Rice University	Bryan Bales	RICE::BALES	703/527-4940	JPL
Rutherford Appleton Laboratory (RAL)			+44-235-446511	ESOC
Rutherford Appleton Laboratory (RAL) (JANET Network)	Mike Hapgood	UK.AC.RL.IB::CYM	+44-235-466-520	ESOC

Institution	Contact Name	Contact Mail Address	Contact Phone Number	SPAN Routing Center
S-Cubed	Gary A. Jongeward		619/453-0060	JPL
San Diego Supercomputer Center	E. Paul Love	SDSC::LOVEEP	619/455-4474	JPL
Service Argos, Inc.	Dan Mitchum	NSSDCA::ARGOS6::MITCHUM	301/925-4411	GSFC
Smithsonian Astrophysics Observatory (SAO)	Van McGlasson	CFA7::BOGART	617/495-7392	GSFC
Solar Magnetograph	Edward West	MAGRPH::WEST	205/544-7625	MSFC
Southwest Research Institute	Ron Williams	SWRI::SYSTEM	512/522-3490	JPL
Space Research Institute	Gerald Rabl	GRAZ::RABLL	+43-316	ESOC
Space Telescope Institute	Dave Stern	6559::STERN	301/338-4585	GSFC
Stanford University	Dr. Calvin C. Teague	STAR::CAL	415/723-3596	MSFC
Stennis Space Center	Chuck Martin	SSCSTL::SYSTEM	601/688-1370	MSFC
The Aerospace Corporation	Lynn Freisen	DIRAC2::FREISEN	213/648-5992	JPL
TRW	Carol Lowry	TRWATD::SYSTEM	213/535-2417	JPL
TRW	Paula Evron	TRWSOG::SYSTEM	213/535-5083	JPL
Technical University of Munich	Hans Kraus	TUMUN::KRAUS	+49-8900	ESOC
United States Department of Commerce/ NOAA/NESDIS/NODC	Janet Ward	NODC::WARD	202/673-5509	GSFC
United States Geological Survey (USGS)	Jim Fisher	ISDRES::JFISHER	703/648-7026	GSFC
United States Geological Survey (USGS) (Flagstaff)	John Zabel	IFLAG1::JZABEL	602/527-7113	JPL
Universities Space Research Association	Jayanthi Srikishen	LAMPS::SYSTEM	205/895-0582	MSFC
University of Alabama, Huntsville	Harold Pirtle	CSPARA::PIRTLE	205/895-6664	MSFC
University of Alaska	Jeff Harrison	FRED::DICK	907/474-6329	JPL
University of Arizona	Joe Gotobed	LOONEY::GOTOBED	602/621-6949	JPL
University of California-Berkeley	David Curtis	5409::SYSTEM	415/642-0549	JPL
University of California-Los Angeles (UCLA)	Stephen Cox	UCLASP::SCOX	213/825-6899	JPL
University of California-Santa Barbara	Roger Lenard	UCMBO::ROG	805/961-4541	JPL
University of Chicago	Gordon Lentz	LASR::LENTZ	312/702-7836	MSFC
University of Colorado	Phil Evans	AQUILA::EVANS	303/492-1164	JPL
University of Delaware	Walt Dabell	DELOCN::WALT	302/645-4225	GSFC
University of Hawaii	Jeff Bosel	HAWAII::POSTMASTER	808/948-6321	JPL
University of Iowa	Bill Robison	IOWASP::SYSTEM	319/335-1746	MSFC
University of Kansas	Vince Reinert	KUPHSX::SYSTEM	913/864-3610	MSFC
University of Kiel	Guenter Green	IFKKI::GREEN	+49-431-88-2491	ESOC
University of Maryland	Larry Lutz	UMDSW::LARRY	301/454-4655	GSFC
University of Miami	James Brown	MIAMI::JIM	305/361-4770	MSFC
University of Michigan	Jeff Hays	SPRLC::JHAYS	313/747-3705	MSFC
University of Minnesota	Keith Goetz	WAVES::GOETZ	612/624-3520	MSFC
University of New Hampshire	Barry Reinhold	UNHRCC::BBR	603/862-4532	GSFC
University of Rhode Island	Dan Holloway	URI::DAN	401/792-6831	GSFC
University of Texas-Austin	Rick Watson	UTSPAN::R.WATSON	512/471-8220	JPL
University of Tubingen	Dominic Scales	TUEBIN::SCALES	+49-7071-29-6137	ESOC
University of Washington	Douglas W. Potter		206/543-2652	JPL
University of Washington	Tracy Stenvik	MOTHRA::STENVIK	206/543-5376	JPL
University of Wisconsin	Nancy Podger	MADRAF::PODGER	608/262-2198	MSFC
Utah State University	Ray Rawlins	USU::SYSTEM	801/750-2401	MSFC
Washington University	Susan Slavney	WURST::SLAVNEY	314/889-5493	MSFC
Woods Hole Oceanographic Institute	Warren Sass	RED::SPAN MANAGER	508/548-1400 (x2875)	GSFC

B. Goddard Space Flight Center SPAN Routing Center

Updated 6/16/89

GODDARD SPACE FLIGHT CENTER (GSFC) Discipline: All

GSFC/SPAN Routing Center Manager: Todd Butler (NCF::TBUTLER)
Goddard Space Flight Center (GSFC)
Code 633
Greenbelt, MD 20771
301/286-7251, FTS 888-7251
Science: Dr. James L. Green (NCF::GREEN)
301/286-4334, FTS 888-4334
Security: Pat Sisson (NCF::NETMGR)
301/286-7251, FTS 888-7251

GSFC-Served SPAN Sites

AIR FORCE GEOPHYSICS LABORATORY (AFGL) Discipline: Solar Terrestrial

Technical: Mike Houle (AFGLSC::HOULE)
Air Force Geophysics Laboratory (AFGL)
Hanscom AFB, MA
617/377-2478
Science: Donna Pelekasis
Security: Mike Houle (AFGLSC::HOULE)
Len D'Alberti
617/377-2411

APPLIED PHYSICS LABORATORY (APL) Discipline: Solar Terrestrial

Technical: Lora Suther (APLSP::SUTHER)
Johns Hopkins University Applied Physics Laboratory (JHU APL), 2-150
Johns Hopkins Road
Laurel, MD 20707
301/953-5000 (x8412)
Science:
Security: Stuart Nylund (AMPTE::NYLUND)
301/953-5000 (x8411)
Oliver Lamm
301/953-5000 (x8470)

BARTOL RESEARCH FOUNDATION Discipline: Physics

Technical: Paul Evanson (BARTOL::PENGUIN)
University of Delaware
Bartol Research Foundation
Newark, DE 19716
302/451-8111
Science: William Matthaeus
Security: Paul Evanson (BARTOL::PENGUIN)

BENDIX FIELD ENGINEERING — Discipline:

Technical: David R. Fink (BFECS::SYSDRF)
Bendix Field Engineering
1 Bendix Road
Columbia, MD 21045
301/964-7673
Science: Bruce Schupler
301/964-7901
Security: David R. Fink (BFECS:: SYSDRF)

BOSTON UNIVERSITY — Discipline: Astronomy

Technical: David Bradford (BUASTA::BRADFORD)
Boston University
725 Commonwealth Avenue
Boston, MA 02215
617/353-4884
Science: Frank Sienkiewicz
617/353-5700
Security: David Bradford (BUASTA::BRADFORD)

CANADIAN DATA ANALYSIS NETWORK — Discipline: Space Physics and Aeronomy

Technical: Daniel Servranckx (CANOTT::ACTION)
Canadian Data Analysis Network
National Research Council of Canada
Hertzberg Institute of Astrophysics
100 Sussex Drive, Rm. 1029
Ottawa, Ontario
Canada K1V 7S7
613/990-0805
Science:
Security: Daniel Servranckx (CANOTT::ACTION)

CERRO TOLOLO INTER-AMERICAN OBSERVATORY — Discipline: Space Sciences

Technical: Jim Hughes (CTIOV1::SYSTEM)
Cerro Tololo Inter-American Observatory
Santiago
Chile
+011-56-51-213-352 (x236)
Science:
Security: Jim Hughes (CTIOV1::SYSTEM)

CONTINUOUS ELECTRON BEAM ACCELERATION FACILITY (CEBAF) — Discipline: Energy Physics

Technical: Richard Glass (CEBAF1::GLASS)
Continuous Electron Beam Acceleration Facility (CEBAF)
12000 Jefferson Avenue
Newport News, VA 23606
804/249-7100
Science:
Security: Richard Glass (CEBAF1::GLASS)

CORNELL UNIVERSITY — Discipline: Planetary

Technical: Brian Carcich (CUSPIF::CARCICH)
Cornell University
422 Space Sciences Building
Ithaca, NY 14853
607/255-5908
Science:
Security: Brian Carcich (CUSPIF::CARCICH)

DARTMOUTH COLLEGE — Discipline:

Technical: Doug Frazer (T1::DOUGF)
Dartmouth College
Thayer School of Engineering
Hanover, NH 03755
603/646-3522
Science:
Security: Doug Frazer (T1::DOUGF)

EUROPEAN SPACE OPERATIONS CENTER (ESOC) — Discipline: Space Sciences

Technical: Jenny Franks (ECD1::NETMGR)
Paul Hughes (ECD1::NETMGR)
European Space Operations Center (ESOC)
6100 Darmstadt
West Germany
+49-6151-886
Science: Robert Bosch
Security: Jenny Franks (ECD1::NETMGR)

GODDARD SPACE FLIGHT CENTER/LOCAL AREA COMMUNICATIONS NETWORK (GSFC/LACN) — Discipline: All

Technical: Jerome Bennett (SDCDCL::BENNETT)
Goddard Space Flight Center/
Local Area Communications Network (GSFC/LACN)
Code 630.4
Greenbelt, MD 20771
301/286-4655, FTS 888-4655
Science:
Security: Jerome Bennett (SDCDCL::BENNETT)

GRUMMAN CORPORATE RESEARCH CENTER — Discipline:

Technical: Nance Jennerich (NSSDCA::CRCVAX::SYSTEM)
516/346-6147
Larry Lesyna (NSSDCA::CRCVAX::LESYNA)
516/575-0806
Grumman Corporate Research Center
Network Management
Bethpage, NY 11714-3580
Science:
Security: Nance Jennerich (NSSDCA::CRCVAX::SYSTEM)

KYOTO UNIVERSITY — Discipline: Space Sciences

Technical: Toyo Kamei (NSSDCA::PSI%KYOTO::TOYO)
Kyoto University
Sakyoku, Kyoto
Japan 606
+81-75-722-0865
Science:
Security: Toyo Kamei (NSSDCA::PSI%KYOTO::TOYO)

MASSACHUSETTS INSTITUTE OF TECHNOLOGY (MIT) — Discipline:

Technical: Diane Spiegel (6394::SYSTEM)
Massachusetts Institute of Technology (MIT)
Cambridge, MA 02139
617/253-5935
Science:
Security: Diane Spiegel (6394::SYSTEM)

NASA HEADQUARTERS — Discipline: All

Technical: Mike Newell (POLLUX::MNEWELL)
NASA Headquarters
Washington, DC 20546
202/453-8752
Science:
Security: Mike Newell (POLLUX::MNEWELL)

NATIONAL RADIO ASTRONOMY OBSERVATORY (NRAO) — Discipline: Astronomy

Technical: Al Braun (NRAO::ABRAUN)
Warren Richardson, Charlottesville, VA
804/296-0213
National Radio Astronomy Observatory (NRAO)
1000 Bullock
Socorro, NM 87801
505/772-4335
Science:
Security: Al Braun (NRAO::ABRAUN)

NAVAL RESEARCH LABORATORY (NRL) — Discipline: Computer Sciences

Technical: Paul Lang (11314::LANG)
Naval Research Laboratory (NRL)
Code 4706
Plasma Physics Division
4555 Overlook Avenue
Washington, DC 20375
202/767-3903, FTS 297-3093
Science: Dr. Paul Rodriguez
Security: Paul Lang (11314::LANG)
Bill Yurcik (NRL::YURCIK)

PENNSYLVANIA STATE UNIVERSITY — Discipline: Climate

Technical: Paul Sharum (PSUV01::SHARUM)
814/863-1037
Pennsylvania State University
423 Walker Building
University Park, PA 16802
Science: Jim Breon
814/865-9495
Security: Paul Sharum (PSUV01::SHARUM)

SERVICE ARGOS, INC. — Discipline:

Technical: Dan Mitchum (NSSDCA::ARGOS6::MITCHUM)
Howard Sparks (NSSDCA::ARGOS6::SPARKS)
Service Argos, Inc.
1801 McCormick Drive, Suite 10
Landover, MD 20785
301/925-4411
Science:
Security: Howard Sparks (NSSDCA::ARGOS6::SPARKS)

SMITHSONIAN ASTROPHYSICS OBSERVATORY (SAO) Discipline: Astrophysics

Technical: Van McGlasson (CFA7::BOGART)
617/495-7392, FTS 830-7392
Roger Hauck (CFA2::ROGER)
617/495-7391, FTS 830-7391
Smithsonian Astrophysics Observatory (SAO)
60 Garden Street
B-211/MS-39
Cambridge, MA 02138
Science: Roger Hauck (CFA2::ROGER)
Security: Van McGlasson (CFA7::BOGART)

SPACE TELESCOPE INSTITUTE Discipline: Astrophysics

Technical: Dave Stern (6559::STERN)
301/338-4585
Gary Gladney (SCIVAX::GLADNEY)
301/338-4912
Space Telescope Institute
3700 San Martin Drive
Homewood Campus
Baltimore, MD 21218
Science: Dr. Peter Shames (SCIVAX::SHAMES)
301/338-4748
Security: Dave Stern (6559::STERN)
Doris McClure (SCIVAX::MCCLURE)
301/338-4401

UNITED STATES DEPARTMENT OF COMMERCE/ NATIONAL OCEANOGRAPHIC AND ATMOSPHERIC ADMINISTRATION (NOAA)/NATIONAL ENVIRONMENTAL SATELLITE, DATA, AND INFORMATION SERVICE (NESDIS)/NATIONAL OCEANOGRAPHIC DATA CENTER (NODC) Discipline: Oceans

Technical: Janet Ward (NODC::WARD)
United States Department of Commerce/NOAA/NESDIS/NODC
1825 Connecticut Avenue
Washington, DC 20235
202/673-5509
Science:
Security: Janet Ward (NODC::WARD)

UNITED STATES GEOLOGICAL SURVEY (USGS) Discipline:

Technical: Jim Fisher (ISDRES::JFISHER)
United States Geological Survey (USGS)
National Center
Reston, VA 22092
703/648-7026, FTS 959-7026
Science:
Security: Jim Fisher (ISDRES::JFISHER)

UNIVERSITY OF DELAWARE Discipline: Oceans

Technical: Walt Dabell (DELOCN::WALT)
University of Delaware
College of Marine Studies
700 Pilottown Road
Lewes, DE 19958
302/645-4225
Science: Walt Dabell (DELOCN::WALT)
Security: Walt Dabell (DELOCN::WALT)

UNIVERSITY OF MARYLAND — Discipline: Solar Terrestrial

Technical: Larry Lutz (UMDSW::LARRY)
Department of Physics and Astronomy
University of Maryland
College Park, MD 20742
301/454-4655
Science: Dr. Chuck Goodrich
301/454-5938
Security: Larry Bleau (UMAIP::SYSMGR)
301/454-8384

UNIVERSITY OF NEW HAMPSHIRE — Discipline:

Technical: Barry Reinhold (UNHRCC::BBR)
University of New Hampshire
Science and Engineering Research
Durham, NH 03825
603/862-4532
Science:
Security: Barry Reinhold (UNHRCC::BBR)

UNIVERSITY OF RHODE ISLAND — Discipline: Oceans

Technical: Dan Holloway (URI::DAN)
University of Rhode Island
Graduate School of Oceanography
Kingston, RI 02882
401/792-6831
Science: Peter Cornillon
401/792-6283
Security: Dan Holloway (URI::DAN)

WOODS HOLE OCEANOGRAPHIC INSTITUTE — Discipline: Oceans

Technical: Warren Sass (RED::SPAN_MANAGER)
508/548-1400 (x2875)
Cindy Chandler (RED::CCHANDLER)
Woods Hole Oceanographic Institute
Clark 1
Woods Hole, MA 02543
Science: Andy Maffie (AQUA::AMAFFIE)
508/548-1400 (x2764)
Security: Warren Sass (RED::SPAN_MANAGER)
TCP/IP: Andy Maffie (AQUA::AMAFFIE)

==========
C. Marshall Space Flight Center SPAN Routing Center
==========
Updated 5/16/89

MARSHALL SPACE FLIGHT CENTER (MSFC) Discipline: Solar Terrestrial, Planetary
---
MSFC/SPAN Routing Center Manager: Ann Beckman (SSL::BECKMAN)
205/544-7668, FTS 824-7668
SPAN OSI Transition Manager: Linda Porter (SSL::PORTERL)
205/544-7588, FTS 824-7588
Marshall Space Flight Center (MSFC)
Mail Code ES01
Huntsville, AL 35812
Science: Dennis Gallagher (SSL::GALLAGHER)
205/544-7587
Security: Linda Porter (SSL::PORTERL)

NASA SCIENCE MANAGEMENT INFORMATION Discipline: Spacelab, Space Station
---
Technical: Harrell Phillips (MIPS1::SYSTEM)
NASA Science Management Information
Code EL23
NASA/Marshall Space Flight Center (MSFC)
Huntsville, AL 35812
205/867-7897, FTS 824-2248
Science:
Security: Harrell Phillips (MIPS1::SYSTEM)

SOLAR MAGNETOGRAPH Discipline: Solar Physics

Technical: Edward West (MAGRPH::WEST)
Solar Magnetograph
Code ES52
NASA/Marshall Space Flight Center (MSFC)
Huntsville, AL 35812
205/544-7625, FTS 824-7625
Science: Mona Hagyard (SSL::HAGYARD)
205/544-7612, FTS 824-7612
Security: Edward West (MAGRPH::WEST)

==========
MSFC-Served SPAN Sites
==========

AUGSBURG COLLEGE Discipline: Upper Atmospheric Physics

Technical: Mark Engebretson (AUGGIE::SYSTEM)
Augsburg College
731 21st Avenue S.
Minneapolis, MN 55454
612/330-1067
Science:
Security: Mark Engebretson (AUGGIE::SYSTEM)

EARTH RESOURCES OBSERVATION SYSTEMS (EROS) DATA CENTER — Discipline: Earth Resources

Technical: Tom Bodah (EROSA::SYSTEM)
Earth Resources Observation Systems (EROS) Data Center
MUNDT Federal Building
Sioux Falls, SD 57198
FTS 784-7830
Science:
Security: Tom Bodah (EROSA::SYSTEM)

FLORIDA STATE UNIVERSITY — Discipline: Meteorology

Technical: Tom Kitterman (METDAT::TWK)
904/644-4488
Doug Lee (SCRI::SYSTEM)
904/644-2276, FTS 965-7202
Florida State University
Love Building, Room 319
Tallahassee, FL 32306
Science: Eric Smith
904/644-4253
Security: Doug Lee (SCRI::SYSTEM)
Tom Kitterman (METDAT::TWK)

KENNEDY SPACE CENTER — Discipline: Spacelab, Space Station

Technical: Mark Juhr (KSCDL1::JUHR)
Shawn Riley (KSCDL1::RILEY)
305/867-7897, FTS 823-7897
McDonnell Douglas Space Systems Company
Dept. F888 Gateway Building
P. O. Box 21233
Kennedy Space Center, FL 32815
305/867-3127, FTS 823-3127
Science: Jerry Barnes (KSCDL1::BARNES)
Security: Mark Juhr (KSCDL1::JUHR)

LOUISIANA STATE UNIVERSITY (LSU) — Discipline: Particle Astrophysics

Technical: T. Gregory Guzik (LSU0WS::GUZIK)
Louisiana State University (LSU)
Physics Department
Baton Rouge, LA 70803
504/388-8597
Science: T. Gregory Guzik (LSU0WS::GUZIK)
Security: T. Gregory Guzik (LSU0WS::GUZIK)

NAVAL OCEAN RESEARCH AND DEVELOPMENT ACTIVITY (NORDA) — Discipline: Oceans

Technical: DeeDee Garcia (INO::NETMAN)
Naval Ocean Research and Development Activity (NORDA)
Code 117
Stennis Space Center, MS 39529
601/688-4827, FTS 494-4827
Science: Monty Peffley (NORDA3::PEFFLEY)
601/688-4895
Security: Jim Hammack (INO::NETMAN)
601/688-4791

STANFORD UNIVERSITY

Technical: Dr. Calvin C. Teague (STAR::CAL)
Stanford University
Center for Radar Astronomy
Durand Building, Room 229
Stanford, CA 94305
415/723-3598
Science: Dr. Calvin C. Teague (STAR::CAL)
Security: Dr. Calvin C. Teague (STAR::CAL)

Discipline: Solar Terrestrial and Atmospheric Physics, Spacelab

STENNIS SPACE CENTER

Technical: Chuck Martin (SSCSTL::SYSTEM)
Stennis Space Center
Lockheed
Building 1210
Stennis Space Center, MS 39529-6000
601/688-1370, FTS 494-1370
Science:
Security:

Discipline:

UNIVERSITIES SPACE RESEARCH ASSOCIATION

Technical: Jayanthi Srikishen (LAMPS::SYSTEM)
Universities Space Research Association
Atmospheric Sciences Division
4950 Corporate Dr., Suite 100
Huntsville, AL 35806
205/895-0582, 205/544-8005
Science: Matt Smith (LAMPS::MSMITH)
205/544-8963
Security:

Discipline: Atmospheric Physics

UNIVERSITY OF ALABAMA, HUNTSVILLE

Technical: Harold Pirtle (CSPARA::PIRTLE)
University of Alabama, Huntsville
Research Institute Bldg.
Huntsville, AL 35899
205/895-6664
Science: Roy Torbert (CSPARA::TORBERT)
205/895-6417
Security: Harold Pirtle (CSPARA::PIRTLE)

Discipline: Solar Terrestrial

UNIVERSITY OF CHICAGO

Technical: Gordon Lentz (LASR::LENTZ)
University of Chicago
Laboratory for Astrophysics and Space Research
Enrico Fermi Institute
933 E. 56th Street
Chicago, IL 60637
312/702-7836
Science: Gordon Lentz (LASR::LENTZ)
Security: Gordon Lentz (LASR::LENTZ)

Discipline: Astrophysics

UNIVERSITY OF IOWA — Discipline: Space Physics

Technical: Bill Robison (IOWASP::SYSTEM)
Machine Room Operator: 319/335-1747
University of Iowa
Department of Physics and Astronomy
Iowa City, IA 52242
319/335-1746
Science: Robert L. Brechwald (IOWASP::BRECHWALD)
319/335-1745
Security: Bill Robison (IOWASP::SYSTEM)

UNIVERSITY OF KANSAS — Discipline: Solar Terrestrial

Technical: Vince Reinert (KUPHSX::SYSTEM)
University of Kansas
Department of Physics and Astronomy
Lawrence, KS 66045
913/864-3610
Science: Ed Bell (KUPHSX::BELL)
Security:

UNIVERSITY OF MIAMI — Discipline: Oceans

Technical: James Brown (MIAMI::JIM)
Otis Brown (MIAMI::OTIS)
University of Miami
RSMAS/MPO
4600 Rickenbacker Causeway
Miami, FL 33149
305/361-4770, 305/361-4018
Science: Robert H. Evans (MIAMI::BOB)
Security: James Brown (MIAMI::JIM)

UNIVERSITY OF MICHIGAN — Discipline: Atmospheric Physics, Astrophysics

Technical: Jeff Hays (SPRLC::JHAYS)
University of Michigan
Space Physics Research Laboratory
2455 Hayward
Ann Arbor, MI 48109
313/747-3705
Science: Salim Linggi
Security: Jeff Hays (SPRLC::JHAYS)

UNIVERSITY OF MINNESOTA — Discipline: Plasma Physics

Technical: Keith Goetz (WAVES::GOETZ)
University of Minnesota
School of Physics and Astronomy
116 Church Street, S.E.
Minneapolis, MN 55455
612/624-3520
Science:
Security: Keith Goetz (WAVES::GOETZ)

UNIVERSITY OF WISCONSIN — Discipline: Astrophysics

Technical: Nancy Podger (MADRAF::PODGER)
University of Wisconsin
Madison, WI 53706
608/262-2198
Science: Chris Anderson (MADRAF::ANDERSON)
608/262-0492
Security: Chris Anderson (MADRAF::ANDERSON)

UTAH STATE UNIVERSITY — Discipline: Magnetospheric Science

Technical: Ray Rawlins (USU::SYSTEM)
Utah State University
Center for Atmospheric and Space Sciences, UMC-34
Logan, UT 84322-4405
801/750-2401
Science: Prof. Joe R. Doupnik (USU::JRD)
801/750-2982
Security: Prof. Joe R. Doupnik (USU::JRD)

WASHINGTON UNIVERSITY — Discipline: Planetary Geology

Technical: Susan Slavney (WURST::SLAVNEY)
Washington University
St. Louis, MO 63130
314/889-5493
Science:
Security: Susan Slavney (WURST::SLAVNEY)

D. Jet Propulsion Laboratory SPAN Routing Center

Updated 4/18/89

JET PROPULSION LABORATORY (JPL)

Discipline: Solar Terrestrial, Planetary, Earth Science, Oceans

Technical: Sanford George (JPLNG::GEORGE)
Jet Propulsion Laboratory (JPL)
M/S 802-145
4800 Oak Grove Drive
Pasadena, CA 91109
818/354-4334, FTS 792-4334
Science:
Security: Ron Tencati (ISSAC::RDT)
818/354-4725, FTS 792-4725
Joe Wieclawek
818/354-2419, FTS 792-2419

JPL-Served SPAN Sites

AMES RESEARCH CENTER (ARC)

Discipline: Earth Science

Technical: Mike Rodericks (SAT::SYSTEM)
Ames Research Center (ARC)
Mail Stop 233-15
Moffett Field, CA 94035
414/694-6923, FTS 464-6923
Science: Jim Hart (SAT::HART)
Security:

ARIZONA STATE UNIVERSITY

Discipline: Galileo

Technical: Don Anderson (ASUIPF::ANDERSON)
Arizona State University
Geology
Tempe, AZ 85287-1404
602/965-6336
Science: Ron Greeley (ASUIPF::GREELEY)
Security: Don Anderson (ASUIPF::ANDERSON)

BROWN UNIVERSITY

Discipline: Planetary and Geology, Galileo

Technical: Rob Demillo (BRNPSG::RD)
Brown University
Box 1846
Providence, RI 02912
401/863-3769
Science:
Security: Rob Demillo (BRNPSG::RD)

CALIFORNIA INSTITUTE OF TECHNOLOGY (CALTECH) Discipline: Planetary, Galileo

Technical: Dan Zirin (HAMLET::ZAR)
California Institute of Technology (CalTech)
Geology and Planetary Science
169D S. Mudd
Pasadena, CA 91125
818/356-6861
Science: Ed Danielson (HAMLET::JED)
818/356-6970
Security: Dan Zirin (HAMLET::ZAR)

LOCKHEED PALO ALTO RESEARCH LABORATORIES Discipline: Solar Terrestrial

Technical: Dayton Datlowe (LOCKHD::NETMGR)
Lockheed Palo Alto Research Laboratories
0/91-20 B 255
3170 Porter Drive
Palo Alto, CA 94304
415/424-3274
Science:
Security: Dayton Datlowe (LOCKHD::DATLOWE)

NATIONAL OPTICAL ASTRONOMY OBSERVATORY (NOAO) Discipline: Astronomy

Technical: Steve Grandi (DRACO::GRANDI)
National Optical Astronomy Observatory (NOAO)
950 N. Cherry
Tucson, AZ 85719
602/325-9228
Science:
Security: Steve Grandi (DRACO::GRANDI)

NAVAL POSTGRADUATE SCHOOL Discipline: Oceans

Technical: James Mueller
Naval Postgraduate School
Department of Oceanography
Monterey, CA 93943-5100
408/646-3266
Science:
Security: James Mueller

OREGON STATE UNIVERSITY Discipline: Oceans

Technical: E. L. Beals (OSUVAX::BEALS)
Oregon State University
College of Oceanography
Corvallis, OR 97331
503/754-4017
Science:
Security: E. L. Beals (OSUVAX::BEALS)

PLANETARY SCIENCE INSTITUTE Discipline: Galileo

Technical:
Planetary Science Institute
Tucson, AZ
Science:
Security:

RAND SANTA MONICA

Technical: Tim Colvin (HYRAX::COLVIN)
RAND Santa Monica
RAND Corporation
Santa Monica, CA
213/393-0411
Science: Mert Davies (HYRAX::DAVIES)
Security: Tim Colvin (HYRAX::COLVIN)

Discipline: Galileo

S-CUBED

Technical: Gary A. Jongeward
S-Cubed
P.O. Box 1620
La Jolla, CA 92038
619/453-0060
Science:
Security: Gary A. Jongeward

Discipline:

SAN DIEGO SUPERCOMPUTER CENTER

Technical: E. Paul Love (SDSC::LOVEEP)
San Diego Supercomputer Center
San Diego, CA 92038
619/455-4474
Science:
Security: E. Paul Love (SDSC::LOVEEP)

Discipline: Solar Terrestrial, Astrophysics

THE AEROSPACE CORPORATION

Technical: Lynn Freisen (DIRAC2::FREISEN)
The Aerospace Corporation
Mail Stop M2-269
220 South Douglas, El Segundo
P.O. Box 92957
Los Angeles, CA 90009
213/648-5992
Science:
Security: Lynn Freisen (DIRAC2::FREISEN)

Discipline: Solar Terrestrial

TRW

Technical: Carol Lowry (TRWATD::SYSTEM)
TRW
One Space Park
Building R1/1170
Redondo Beach, CA 90278
213/535-2417
Science:
Security:

Discipline: Solar Terrestrial, Planetary

TRW

Technical: Paula Evron (TRWSOG::SYSTEM)
TRW
One Space Park
M/S 02/2751
Redondo Beach, CA 90278
213/535-5083
Science:
Security:

Discipline: Science Operations Ground System

UNITED STATES GEOLOGICAL SURVEY (USGS) (FLAGSTAFF)

Technical: John Zabel (IFLAG1::JZABEL)
United States Geological Survey (USGS) (Flagstaff)
Astrogeology
2255 N. Gemini Drive
Flagstaff, AZ 86001
602/527-7113
Science:
Security: John Zabel (IFLAG1::JZABEL)

Discipline: Planetary, Galileo

UNIVERSITY OF ALASKA

Technical: Jeff Harrison (FRED::DICK)
University of Alaska
Geophysical Institute
Juneau, AK 99775
907/474-6329
Science:
Security: Jeff Harrison (FRED::DICK)

Discipline: Solar Terrestrial, Atmospheric, Oceans

UNIVERSITY OF ARIZONA

Technical: Joe Gotobed (LOONEY::GOTOBED)
University of Arizona
Lunar and Planetary Laboratory
Tucson, AZ 85721
602/621-6949
Science:
Security: Joe Gotobed (LOONEY::GOTOBED)

Discipline: Planetary

UNIVERSITY OF CALIFORNIA-BERKELEY

Technical: David Curtis (5409::SYSTEM)
University of California-Berkeley
Space Science Laboratory
Berkeley, CA 94720
415/642-0549
Science: Dr. Forrest Moser
415/642-5998
Security: David Curtis (5409::SYSTEM)

Discipline: Solar Terrestrial

UNIVERSITY OF CALIFORNIA-LOS ANGELES (UCLA)

Technical: Stephen Cox (UCLASP::SCOX)
University of California-Los Angeles (UCLA)
Institute of Geophysics and Planetary Physics
Los Angeles, CA 90024
213/825-6899
Science: Neal Cline (UCLASP::NCLINE)
Security: Stephen Cox (UCLASP::SCOX)

Discipline: Planetary, Galileo

UNIVERSITY OF CALIFORNIA-SANTA BARBARA

Technical: Roger Lenard (UCMBO::ROG)
University of California-Santa Barbara
Geography Department
Santa Barbara, CA
805/961-4541
Science:
Security: Roger Lenard (UCMBO::ROG)

Discipline: Oceans

UNIVERSITY OF COLORADO

Technical: Phil Evans (AQUILA::EVANS)
University of Colorado
Boulder, CO 80309
303/492-1164
Science: Randy Davis (AQUILA::DAVIS)
Security: Phil Evans (AQUILA::EVANS)

Discipline: Atmospheric, Oceans, Galileo

UNIVERSITY OF HAWAII

Technical: Jeff Bosel (HAWAII::POSTMASTER)
University of Hawaii
Planetary Geosciences
2525 Correa Road
Honolulu, HI 96822
808/948-6321
Science:
Security: Jeff Bosel (HAWAII::POSTMASTER)

Discipline: Planetary and Geology, Galileo

UNIVERSITY OF WASHINGTON

Technical: Douglas W. Potter
George Pitt
University of Washington
Geophysics Program, AK-50
Seattle, WA 98195
206/543-2652
Science: Douglas W. Potter
Security: Douglas W. Potter

Discipline: Solar Terrestrial

UNIVERSITY OF WASHINGTON

Technical: Tracy Stenvik (MOTHRA::STENVIK)
University of Washington
3737 Brookman Avenue, N.E.
Seattle, WA 98195
206/543-5376
Science:
Security: Tracy Stenvik (MOTHRA::STENVIK)

Discipline:

E. Johnson Space Center SPAN Routing Center

Updated 10/28/88

JOHNSON SPACE CENTER (JSC) — Discipline: Planetary

JSC/SPAN Routing Center Manager: Dan Anderson (SN::DAN)
NASA/Johnson Space Center (JSC)
Mail Code SN
Houston, TX 77058
713/483-5144, FTS 525-5144
Science: Dan Anderson (SN::DAN)
Security: Dan Anderson (SN::DAN)

JSC-Served SPAN Sites

LOS ALAMOS NATIONAL LABORATORIES — Discipline: Solar Terrestrial

Technical: Steve Blair (ESSDP2:089804)
Anthony Salazar (ESSDP2:100034)
Marti Hill (ESSDP2::103071)
Los Alamos National Laboratories
Mail Stop D440
P.O. Box 1663
Los Alamos, NM 87545
505/667-9211
Science:
Security: Jim Krone (ESSDP2::SYSTEM)
505/667-7457, FTS 843-7457

LUNAR AND PLANETARY INSTITUTE — Discipline: Planetary

Technical: Kinpong Leung (LPI::LEUNG)
Lunar and Planetary Institute
McGetchin Hall
3303 NASA Road One
Houston, TX 77058
713/486-2165
Science: Kinpong Leung (LPI::LEUNG)
Security: Kinpong Leung (LPI::LEUNG)

NATIONAL CENTER FOR ATMOSPHERIC RESEARCH (NCAR) — Discipline: Atmospheric, Oceans

Technical: Basil Irwin (AAP2::IRWIN)
National Center for Atmospheric Research (NCAR)
P.O. Box 3000
Boulder, CO 80307
303/497-1261
Science:
Security: Basil Irwin (AAP2::IRWIN)

NATIONAL OCEANIC AND ATMOSPHERIC ADMINISTRATION/NATIONAL INSTITUTE OF STANDARDS AND TECHNOLOGY (NOAA/NIST)

Discipline: Solar Terrestrial, Space Environment

Technical: Jim Winkelman (CRYOEL::WINKELMAN)
National Oceanic and Atmospheric Administration/
National Institute of Standards and
Technology (NOAA/NIST)
325 Broadway
Boulder, CO 80303
303/497-3283, FTS 320-3283
Science: Joe H. Allen
303/497-6323
Dick Grubb
FTS 320-3284
Security: Dick Harris (CRYOEL::HARRIS)
303/497-3776, FTS 320-3776

RICE UNIVERSITY

Discipline: Astronomy, Space Physics

Technical: Bryan Bales (RICE::BALES)
Rice University
Department of Space Physics and Astrophysics
P.O. Box 1892
Houston, TX 77251
713/527-4940
Science: Patricia Reiff (RICE::REIFF)
713/527-8101 (x2650)
Security: Bryan Bales (RICE::SYSTEM or RICE::BALES)

SOUTHWEST RESEARCH INSTITUTE

Discipline: Solar Terrestrial, Atmospheric, Spacelab

Technical: Ron Williams (SWRI::SYSTEM)
Southwest Research Institute
Division 15
P.O. Drawer 28510
San Antonio, TX 78284
512/522-3490, 512/684-5111 (x3318)
Science: Ron Janetske (SWRI::RON)
512/522-3318
Security: Ron Janetske (SWRI::RON)

UNIVERSITY OF COLORADO

Discipline: Atmospheric, Oceans

Technical: Phil Evans (ARIES::EVANS)
University of Colorado
Laboratory for Astroscience and Space (LASP)
Boulder, CO 80309
303/492-1164, 303/492-6951, 303/492-7941
Science: Randy Davis (AQUILA::DAVIS)
303/492-6867
Security: Phil Evans (AQUILA::EVANS)

UNIVERSITY OF TEXAS-AUSTIN

Discipline: Oceans

Technical: Rick Watson (UTSPAN::R.WATSON)
University of Texas-Austin
Center for Space Research
Austin, TX 78712
512/471-8220, FTS 770-8220
Science: Bob E. Schutz (UTSPAN::UTCSR::SCHUTZ)
Security: Rick Watson (UTSPAN::R.WATSON)
Bill Bard (UTSPAN::B.BARD)
512/471-3241

F. European-SPAN (E-SPAN) Routing Center

European-SPAN (E-SPAN) has two major routing centers which serve many different countries in Europe. They are located at the following institutes:

European Space Operations Center (ESOC) in Darmstadt, West Germany
European Space Research Institute (ESRIN) in Frascati, Italy

This section on E-SPAN lists institutions by country for ease of use.

AUSTRIA

SPACE RESEARCH INSTITUTE — Discipline:
(Not Yet Connected - 1/4/89)

Technical: Gerald Rabl (GRAZ::RABLL)
Space Research Institute
Halbaerthgasse 1
Graz
Austria
+43-316
Science:
Security:

FRANCE

CENTRE DE RECHERCHE EN PHYSIQUE DE L'ENVIRONMENT (CRPE) — Discipline:

Technical: Edmond Pawela (CRPEIS::PAWELA)
Centre de Recherche en Physique
de l'Environment (CRPE)
Centre National d'Etudes en
Telecommunication (CNET)
3, Avenue de la Republique
92131 Issy les Moulineaux
Paris
France
+33-1-4529-4602
Science: Patrick Canu (CRPEIS::CANU)
Security:

EUROPEAN SPACE AGENCY, HEADQUARTERS — Discipline:

Technical: Gerbrand Veldman (ESAHQ0::GVELDMAN)
European Space Agency, Headquarters
8-10 Rue Mario Nikis
75738 Paris Cedex 15
France
+33-14273-7654
Science: Nick v.d. Heijden
Security: Gerbrand Veldman (ESAHQ0::GVELDMAN)

INSTITUT D'ASTROPHYSICS DE PARIS Discipline: Astrophysics

Technical: Diego Cesarski (IAPOBS::DIEGO)
Institut d'Astrophysics de Paris
Centre de Calcul
98 bis Boulevard Arago
75014 Paris
France
+33-1-4320-1425
Science:
Security:

OBSERVATOIRE ASTRONOMIQUE DE STRASBOURG Discipline: Astronomy
---
Technical: Francois Bonnarel (CDSXB1::SYSTEM)
Observatoire Astronomique de Strasbourg
Centre de Donnees Stelaires
11, Rue de l'Universite
Strasbourg
France F-6700
+33-88358219
Science:
Security:

OBSERVATOIRE DE PARIS-MEUDON Discipline: Space Physics

Technical: Sylviane Chaintreuil (MEUDON::SYSTEM)
Observatoire de Paris-Meudon
Departement Researche Spatiales
5 Place Jules Jannsen
92195 Meudon
France
+33-1-45007-7669
Science: Chris Harvey (MEUDON::HARVEY)
Security:

GERMANY

EUROPEAN SPACE OPERATIONS CENTER (ESOC) Discipline: All

ESOC/SPAN Routing Center Manager: Jenny Franks (ECD1::NETMGR)
Paul Hughes (ECD1::NETMGR)
European Space Operations Center (ESOC)
Robert Bosch Strasse 5
6100 Darmstadt
West Germany
+49-6151-886-297
Science: Jenny Franks (ECD1::S20JENNY)
Security: Jenny Franks (ECD1::S20JENNY)

EUROPEAN MOLECULAR BIOLOGY LABORATORY (EMBL) Discipline:

Technical: Roy Ormond (EMBL::ORMOND)
European Molecular Biology Laboratory (EMBL)
Postfach 102209
6900 Heidelberg
West Germany
+49-6221-387-248
Science:
Security: Roy Ormond (EMBL::ORMOND)

EUROPEAN SOUTHERN OBSERVATORY Discipline:

Technical: Charlie Dunnas (ESOMC1::DUNNAS)
European Southern Observatory
Space Telescope-European Coordination Facility
Image Processing Group
2 Karlschwarzshildestrasse
8046 Garching
West Germany
+49-89-32006-360
Science: Piero Benvenuti (ESOMC1::PIERO)
Security: Charlie Dunnas (ESOMC1::DUNNAS)

GERMAN AEROSPACE RESEARCH ESTABLISHMENT Discipline:

Technical: Manfred Exner (MUSC2::SYSTEM)
Deutsche Forschungs- und Versuchsanstalt
fuer Luft- und Raumfahrt eV (DFVLR)
Postfach 906058
5000 Koeln
West Germany
+49-2203-601-3046
Science:
Security:

GERMAN SPACE OPERATION CENTER Discipline:

Technical: Martin Pilgram (GSOC1::PILGRAM)
German Space Operation Center
Deutsche Forschungs- und Versuchsanstalt
fuer Luft- und Raumfahrt eV (DFVLR)
DFVLR, RF-RM-KM
8031 Oberpfaffenhofen
Meunchenerstrasse
West Germany
+49-8153-281266
Science:
Security:

INSTITUTE FOR OPTOELECTRONICS Discipline:

Technical: Gerd Enderlein (OOEPE5::SYSTEM)
Institut fuer Optoelektronik
Deutsche Forschungs- und Versuchsanstalt
fuer Luft- und Raumfahrt eV (DFVLR)
Planetary Remote Sensing Section
Port Wessling
8031 Oberpfaffenhofen
West Germany
+49-8153-28789
Science: Gerd Enderlein (OOEPE5::SYSTEM)
Security: Gerd Enderlein (OOEPE5::SYSTEM)

MAX PLANCK INSTITUTE FOR AERONOMY Discipline:

Technical: Hans-Juergen Mueller (LINMPI::MUELLER)
Max-Planck-Institut fuer Aeronomie
Max-Planck Strasse
3411 Lindau (Harz)
West Germany
+49-555-641-301
Science: Hans-Juergen Mueller (LINMPI::MUELLER)
Security: Hans-Juergen Mueller (LINMPI::MUELLER)

MAX PLANCK INSTITUTE FOR EXTRATERRESTRIAL PHYSICS — Discipline:

Technical: Karlheinz Muehlhaeuser (MPE::KZM)
Max-Planck-Institut fuer Astrophysik
2 Karlschwarzschildestrasse
8046 Garching
West Germany
+49-89-3299-520
Science: Wolfgang Baumjohann (MPE::BJ)
Security: Karlheinz Muehlhaeuser (MPE::KZM)

MAX PLANCK INSTITUTE FOR NUCLEAR PHYSICS — Discipline:

Technical: Hans-Werner Heyng (UXNHDS::HWH)
Max-Planck-Institut fuer Kernphysik
W. Bothe Laboratory
6900 Heidelberg
West Germany
+48-6221-516245
Science: Hans-Werner Heyng (UXNHDS::HWH)
Security: Hans-Werner Heyng (UXNHDS::HWH)

TECHNICAL UNIVERSITY OF MUNICH — Discipline:

Technical: Hans Kraus (TUMUN::KRAUS)
Technische Universitaet Muenchen
Am Coulombwall
8046 Garching
West Germany
+49-8900
Science:
Security:

UNIVERSITY OF KIEL — Discipline:

Technical: Guenter Green (IFKKI::GREEN)
Christian-Albrechts Universitaet Kiel
Institut fuer Reine und Angwandte Kernphysik
Olshausenstrasse 40
2300 Kiel
West Germany
+49-431-88-2491
Science: Guenter Green (IFKKI::GREEN)
Security: Guenter Green (IFKKI::GREEN)

UNIVERSITY OF TUBINGEN — Discipline:

Technical: Dominic Scales (TUEBIN::SCALES)
Eberhard-Karls-Universitaet Tuebingen
1 Wilhelmstrasse 7
7400 Tuebingen
West Germany
+49-7071-29-6137
Science:
Security:

ITALY

EUROPEAN SPACE RESEARCH INSTITUTE (ESRIN) Discipline: All

ESRIN/SPAN Routing Center Managers: Jordi Pascual (ESIS::NETMGR, ESIS::JORDI)
+39-6-94180438
Mike Brett (ESIS::NETMGR, ESIS::MIKE)
+39-6-94180456

European Space Research Institute (ESRIN)
Via Galileo Galilei SNC
00044 Frascati
Rome
Italy
Science: Miguel Albrecht (ESIS::MIGUEL)
+39-6-94180330
Security:

CONSIGLIO NAZIONALE DELLE RICERCHE CENTRO PER L'ASTRONOMIA INFRAROSSA E LO STUDIO DEL MEZZO INSTELLARE (CNR/CAISMI) Discipline:

Technical:
Consiglio Nazionale delle Ricerche/
Centro per l'Astronomia Infrarossa e lo
Studio del Mezzo Instellare (CNR/CAISMI)
Largo Enrico Fermi 5
50125 Firenze
Italy
+055-27521
Telex: 572268 ARCETR I
Telefax: +055-220039
Science:
Security:

DELL'UNIVERSITA SEZIONE ASTROFISICA Discipline:

Technical:
Dipartimento di Fisica dell'Universita
Sezione Astrofisica
Universita di Milano
Via Celoria 16
20133 Milano
Italy
+2-2392401
Science:
Security:

DIPARTIMENTO DI FISICA TOR VERGATA Discipline:

Technical:
Dipartimento di Fisica Tor Vergata
Via O. Raimondo
00173 Rome
Italy
+06/79792323
Telex: 626382 FIUNTV
Telefax: +06-6133074
Science:
Security:

DIPARTIMENTO SCIENZE FISICHE, SEZIONE ASTROFISICA PLASMI — Discipline:

Technical:
Dipartimento Scienze Fisiche,
Sezione Astrofisica Plasmi
Universita di Napoli
Mostra d'Oltramare
80125 Napoli
Italy
+081-7253111
Telex: 720320 INFNNA
Telefax: +081-614508
Science:
Security:

EARTHNET PROGRAMME OFFICE — Discipline: All

Technical: Martin Spence (EPO700::SPENCE)
Earthnet Programme Office
European Space Research Institute (ESRIN)
Via Galileo Galilei SNC
00044 Frascati
Rome
Italy
+39-6-94180420
Science:
Security:

EUROPEAN SPACE RESEARCH INSTITUTE (ESRIN) — Discipline:

Technical:
European Space Research Institute (ESRIN)
C.P. 64
Via Galileo Galilei
00044 Frascati
Italy
+06-941801
Telex: 613532 ESAIRS I
Telefax: +06-94180361
Science:
Security:

FOOD AND AGRICULTURE ORGANISATION (FAO) OF THE U.N. — Discipline:

Technical: K. Mead (FAO::SYSTEM)
+39-6-5797-4744
Food and Agriculture Organisation (FAO) of the U.N.
Div. AFC
Via delle Terme di Caracalla
Rome 00100
Italy
Science: A. Christoforides
+39-6-5797-6351/6734
Security:

LABORATORI DI FISICA COSMICA DEL CONSIGLIO NAZIONALE DELLE RICERCHE (CNR), ISTITUTO DI FISICA COSMICA, MILANO

Disciplins:

Technical:
Laboratori di Fisica Cosmica del
Consiglio Nazionale delle Ricerche (CNR)
Instituto di Fisica Cosmica, Milano
Via Bassini 15
20133 Milano
Italy
+2-2363542
Science:
Security:

ISTITUTO ASTRONOMICO

Discipline:

Technical:
Istituto Astronomico
Universita di Roma la Sapienza
Via Lancisi 29
00161 Roma
Italy
+6-8830309
Telex: 613255 INFNRO
Telefax: +06-8831245
Science:
Security:

ISTITUTO DI ASTROFISICA SPAZIALE/CONSIGLIO NAZIONALE DELLE RICERCHE (IAS/CNR)

Discipline:

Technical:
Istituto di Astrofisica Spaziale/Consiglio
Nazionale delle Ricerche (IAS/CNR)
C.P. 67
00044 Frascati
Italy
+06-9425651
Telex: 680489 CNRFRA I
Telefax: +06-9423847
Science:
Security:

ISTITUTO DI ASTROFISICA SPAZIALE/CONSIGLIO NAZIONALE DELLE RICERCHE (IAS/CNR) REPARTO DI PLANETOLOGIA

Discipline:

Technical:
Istituto di Astrofisica Spaziale/Consiglio
Nazionale delle Ricerche (IAS/CNR)
Reparto di Planetologia
Via le dell'Universita 11
00185 Roma
Italy
+06-4956951
Telfax: +06-4954969
Science:
Security:

ISTITUTO DI ASTRONOMIA, UNIVERSITA DI FIRENZE

Discipline:

Technical:
Istituto di Astronomia
Universita di Firenze
Largo Enrico Fermi 5
50125 Firenze
Italy
+055-27521
Telex: 572268 ARCETR I
Telefax: +055-220039
Science:
Security:

ISTITUTO DI FISICA DELLO SPAZIO INTERPLANETARIO (IFSI)

Discipline: Plasma Physics Gravitational Waves, Infrared Astronomy

Technical: Cecilia Ceccarelli (IFSI::CECILIA, IFSI::SUPERMAN)
Brunella Nisini (IFSI::BRUNI)
Istituto di Fisica dello Spazio Interplanetario (IFSI)
Via Galileo Galilei
C.P. 27
00044 Frascati
Rome
Italy
+39-6-9423801
Science: Marino Dobrowolni (IFSI::DOBROW)
Security: Cecilia Ceccarelli (IFSI::CECILIA, IFSI::SUPERMAN)

ISTITUTO DI FISICA GENERALE, SEZIONE ASTR.

Discipline:

Technical:
Istituto di Fisica Generale, Sezione Astr.
Via Pietro Giuria 1
10100 Torino
Italy
+011-66271
Telex: 211041 INFNTO
Telefax: +011-6699579
Science:
Security:

ISTITUTO DI RADIOASTRONOMIA DEL CONSIGLIO NAZIONALE DELLA RICERCHE (CNR)

Discipline:

Technical:
Istituto di Radioastronomia del Consiglio
Nazionale della Ricerche (CNR)
Via Irnerio 46
40126 Bologna
Italy
+51-243144
Telex: 250634 INFNBO I
Telefax: +051-247244
Science:
Security:

ISTITUTO NAZIONALE DI FISICA NUCLEARE (INFN) Discipline: Nuclear Physics Research

Technical:
Istituto Nazionale di Fisica Nucleare (INFN)
Laboratori Nazionali di Frascati (LNF)
Via Enrico Fermi 40
00044 Frascati
Rome
Italy
LNF Computing Center
System Manager: Agnese Martini (VAXLNF::MARTINI)
+39-6-9403340
Network Manager: Massimo Pistoni (VAXLNF::MASSIMO)
+39-6-9403372
Science:
Security: Agnese Martini (VAXLNF::MARTINI)
Massimo Pistoni (VAXLNF::MASSIMO)

ISTITUTO PER L'ELABORAZIONE DI SEGNALI ED IMMAGINI/CONSIGLIO NAZIONALE DELLE RICERCHE (IESI/CNR) Discipline:

Technical:
Istituto per l'Elaborazione di Segnali ed Immagini/Consiglio Nazionale delle Ricerche (IESI/CNR)
Istituto di Fisica
Universita di Bari
Via G. Amendola 173
70126 Bari
Italy
+080-331044
Telex: 810333 PHISBA 1
Science:
Security:

ISTITUTO TECNOLOGIE E STUDIO DELLE RADIAZIONI EXTRATERRESTRI/CONSIGLIO NAZIONALE DELLE RICERCHE (TESRE/CNR) Discipline:

Technical:
Istituto Tecnologie e Studio delle Radiazioni Extraterrestri/Consiglio Nazionale delle Ricerche (TESRE/CNR)
Via de Castagnoli
40126 Bologna
Italy
+51-519593
Telex: 511350 CNRBO I
Telefax: +051-229702
Science:
Security:

OSSERVATORIO ASTROFISICO DI ARCETRI Discipline:

Technical:
Osservatorio Astrofisico di Arcetri
Dipartimento di Fisica, Gruppo Spazio
Universita di Firenze
Largo Enrico Fermi 2
50125 Firenze
Italy
+55-27521
Telex: 572268 ARCETR I
Telefax: +055-220039
Science:
Security:

OSSERVATORIO ASTROFISICO DI CATANIA Discipline:

Technical:
Osservatorio Astrofisico di Catania
Instituto di Astronomia
Universita di Catania
Citta Universitaria
Viale Andrea Doria 6
95125 Catania
Italy
+95-330533
Telex: 970359
Telefax: +095-330592
Science:
Security:

OSSERVATORIO ASTRONOMICO DI BOLOGNA Discipline:

Technical:
Osservatorio Astronomico di Bologna
Dipartimento di Astronomia
Universita di Bologna
C.P. 596
40100 Bologna
Italy
+51-259301/259401
Science:
Security:

OSSERVATORIO ASTRONOMICO DI BRERA Discipline:

Technical:
Osservatorio Astronomico di Brera
Via Brera 28
20121 Milano
Italy
+2-874444
Science:
Security:

OSSERVATORIO ASTRONOMICO DI BRERA Discipline:
(SUCCURSALE MERATE)

Technical:
Osservatorio Astronomico di Brera
(Succursale Merate)
Via E. Bianchi 46
22055 Merate
Italy
+39-596412
Telefax: +039/598492
Science:
Security:

OSSERVATORIO ASTRONOMICO DI CAPODIMONTE Discipline:

Via Moiariello 16
80131 Napoli
Italy
+81-440101
Telex: 710223 ASTRNA I
Telefax: +081-456710
Science:
Security:

OSSERVATORIO ASTRONOMICO DI COLLURANIA Discipline:

Technical:
Osservatorio Astronomico di Collurania
Via Viscerale 47
64100 Teramo
Italy
+0861-210490
Telefax: 0861-210492
Science:
Security:

OSSERVATORIO ASTRONOMICO DI PADOVA Discipline:

Technical:
Osservatorio Astronomico di Padova
Istituto di Astronomia
Universita di Padova
Vicolo dell'Osservatorio 5
35123 Padova
Italy
+49-661499
Telex: 432071 ASTROS I
Telefax: +049-38919
Science:
Security:

OSSERVATORIO ASTRONOMICO DI ROMA Discipline:

Technical:
Osservatorio Astronomico di Roma
Astronomico Universita Roma I
Via del Parco Mellini 84
00136 Roma
Italy
+06-347056/3452656
Telex: 626326 OA ROMA I
Science:
Security:

OSSERVATORIO ASTRONOMICO DI ROMA Discipline: Astronomy
SEDE DI MONTE PORZIO

Technical: Domenico Nanni(ASTRMP::NANNI)
+39-6-9449019
Osservatorio Astronomico di Roma Sede di Monte Porzio
Via dell'Osservatorio 1
0040 Monte Porzio Catone
Roma
Italy
+06-9449019
Science:
Security:

OSSERVATORIO ASTRONOMICO DI TORINO Discipline:

Technical:
Osservatorio Astronomico di Torino
Via Osservatorio 20
10025 Pino Torinese (TO)
Italy
+11-841067/842040/842412
Telex: 213236 TOASTR I
Telefax: +011-8699579
Science:
Security:

OSSERVATORIO ASTRONOMICO DI TRIESTE Discipline:

Technical: Fabio Pasian (ESRIN1::ASTRTS::PASIAN)
Osservatorio Astronomico di Trieste
Dipartimento di Astronomia
  dell'Universita di Trieste
Via Tepolo 11
34131 Trieste
Italy
+40-309390/309342/768005
Telex: 461137 OAT I
Telefax: +040-309418
Science: Fabio Pasian (ESRIN1::ASTRTS::PASIAN)
Security: Fabio Pasian (ESRIN1::ASTRTS::PASIAN)

OSSERVATORIO ASTRONOMICO SEDE DI ASIAGO Discipline:

Technical:
Osservatorio Astronomico Sede di Asiago
Universita di Padova
Via dell'Osservatorio
36012 Asiago
Italy
+424-62665/62032
Telex: 430110 SETOUR I
Science:
Security:

SCUOLA INTERNAZIONALE SUPERIORE DI Discipline:
STUDI AVANZATI

Technical:
Scuola Internazionale Superiore di
  Studi Avanzati
Sezione Astrofisica
Strada Costiera 11
34014 Trieste
Italy
+40-224118
Telex: 460392 ICTP
Science:
Security:

SCUOLA NORMALE SUPERIORE Discipline:

Technical:
Scuola Normale Superiore
Piazza dei Cavalieri 6
56100 Pisa
Italy
+050-597260
Telex: 590548 SNSPI I
Telefax: +050-563513
Science:
Security:

STAZIONE ASTRONOMIA, CAGLIARI Discipline:

Technical:
Stazione Astronomica, Cagliari
Via Ospedali 72
09100 Cagliari
Italy
+70-663544/657757/711246
Telex: 90326 OSSAST
Science:
Security:

UNIVERSITA DEGLI STUDI DI LECCE — Discipline:

Technical:
Universita Degli Studi di Lecce
C.P. 193
Via Arnesano
73100 Lecce
Italy
+0832-627247
Telex: 860128 UNSTLE I
Science:
Security:

UNIVERSITA DI PISA — Discipline:

Technical:
Universita di Pisa
Istituto di Astronomia
Lungarno Pacinotti 43
56100 Pisa
Italy
+050-597111
Telex: 590035 UNIVPI I
Science:
Security:

THE NETHERLANDS

EUROPEAN SPACE RESEARCH AND TECHNOLOGY CENTRE (ESTEC) — Discipline:

Technical: Gerbrand Veldman (ESTCS1::GVELDMAN)
European Space Research and Technology Centre (ESTEC)
Postbus 299
2200 AG Noordwijk-Aan-Zee
The Netherlands
+31-1719-83120
Science: Trevor Sanderson (ESTCS1::TSANDERS)
Security: Gerbrand Veldman (ESTCS1::GVELDMAN)

EXOSAT OBSERVATORY — Discipline: Astrophysics

Technical: Guenter Thoerner (EXOSAT::SYSTEM)
Exosat Observatory
European Space Research and Technology Centre (ESTEC)
Postbus 299
2200 AG Noordwijk-Aan-Zee
The Netherlands
+49-1718-84218
Science: Andy Pollack (EXOSAT::ANDY)
Security: Guenter Thoerner (EXOSAT::SYSTEM)

SPAIN

INTERNATIONAL ULTRAVIOLET EXPLORER (IUE) OBSERVATORY — Discipline:

Technical: Francisco Marcelo (VILSPA::SYS)
International Ultraviolet Explorer (IUE) Observatory
ESA Villafranca Satellite Tracking Station
P.O. Box/Apartado 54065
Madrid
Spain
+34-1401-9661
Science: Michael Barylak (VILSPA::MB)
Security: Francisco Marcelo (VILSPA::SYS)

INSTITUTO DE ASTROFISICA DE CANARIAS — Discipline: Astrophysics

Technical: Pedro Martin (IAC::SYSTEM)
Instituto de Astrofisica de Canarias
38200 La Laguna
Tenerife
Spain
+34-22-262211
Science:
Security:

SWEDEN

DEPARTMENT OF PLASMA PHYSICS, KTH — Discipline: Space and Laboratory Plasma Physics

Technical: Bengt H. Nilsson (ESRIN2::PLAFYS::NILSSON)
Department of Plasma Physics, KTH
The Royal Institute of Technology
S-100 44 Stockholm
Sweden
+46-8-7907693
Science: Per-Arne Lindqvist (ESRIN2::PLAFYS::LINDWVIST)
+46-8-7907696
Security: Bengt H. Nilsson (ESRIN2::PLAFYS::NILSSON)

UNITED KINGDOM

RUTHERFORD APPLETON LABORATORY (RAL) — Discipline:

Technical:
Rutherford Appleton Laboratory (RAL)
Chilton
Didcot
Oxfordshire
England
+44-235-446511
Science:
Security:

INDIRECTLY CONNECTED USING COLOUR BOOK SOFTWARE

RUTHERFORD APPLETON LABORATORY (RAL) Discipline:
(JANET NETWORK)

Technical: Mike Hapgood (UK.AC.RL.IB::CYM)
Rutherford Appleton Laboratory (RAL)
Chilton
Didcot
Oxon, OX11 0QX
England
+44-235-446-520
Science: Mike Hapgood (UK.AC.RL.IB::CYM)
Security: Mike Hapgood (UK.AC.RL.IB::CYM)

V. Technical References for the Space Physics Analysis Network

The following references can be obtained from the National Space Science Data Center upon request by electronic mail to the following accounts:

SPAN: NCF::REQUEST
or NSSDCA::REQUEST
or NSSDC::REQUEST

INTERNET: REQUEST@NSSDCA.GSFC.NASA.GOV
or REQUEST@NSSDC.GSFC.NASA.GOV

or by writing to:

National Space Science Data Center
Code 633.4
Goddard Space Flight Center
Greenbelt, Maryland 20771

Phone: (301) 286-6695 or FTS 888-6695

SPAN Articles and Technical References

Green, J. L., J. H. Waite, J. F. E. Johnson, J. R. Doupnik, and R. Heelis, *MSFC/SCAN Network Stage 1 Workshop*, NASA TM-82514, April 1983.

Green, J. L., "Spacelab Data Analysis Using the SCAN System," *National Symposium and Workshop on Optical Platforms Proceedings*, SPIE 493 (C. Wyman, ed.), 370, 1984.

Salamone, P. P., *Science Computer Networking at NASA: The Space Physics Analysis Network*, Mitre Corporation contract report (limited distribution), September 1984.

Green, J. L., and D. J. Peters (eds.), *Introduction to the Space Physics Analysis Network (SPAN)*, NASA TM-86499, April 1985.

Gallagher, D. L., J. L. Green, and R. Newman, *SPAN Graphics Display Utilities Handbook*, NASA TM-86500, May 1985.

Sanderson, T., S. Ho, N. van der Heijden, E. Jabs, and J. L. Green, "Near-Realtime Data Transmission During the ICE-Comet Giacobini-Zinner Encounter," *ESA Bulletin*, 45, 21, 1986.

Green, J. L., and J. H. King, "Behind the Scenes During a Comet Encounter," *EOS* (feature article), 67, 105, March 1986.

Hahn, K. J., and H. J. Singer, *A Graphics Capability for the SPAN Network*, Air Force Geophysics Laboratory Technical Report, March 1986.

Green, J. L., D. J. Peters, N. van der Heijden, and B. Lopez-Swafford, *Management of the Space Physics Analysis Network (SPAN)*, First Edition, NSSDC Technical Report, July 1986.

Gary, P. J., E. D. Rothe, M. C. Spinolo, and M. Peters, *A High Speed Local Area Computer Network Across the Goddard Space Flight Center*, GSFC Technical Report, July 1986.

Quarterman, J. S., and J. C. Hoskins, "Notable Computer Networks," *Communications of the ACM*, Vol. 29, 10, October 1986.

Hapgood, M. A., *Access to the Space Physics Analysis Network (SPAN): A Guide for JANET Users*, RAL Technical Report, October 1986.

Rees, D., I. Perla, N. P. Meredith, J. L. Green, and N. van der Heijden, "Networking Ground-Based Images of Halley During the Giotto Encounter," *EOS* (feature article), 67, 1385, December 16, 1986.

Green, J. L., V. L. Thomas, B. Lopez-Swafford, and L. Z. Porter, *Introduction to the Space Physics Analysis Network (SPAN)*, Second Edition, NSSDC Technical Report, January 1987.

Green, J. L., D. J. Peters, N. van der Heijden, and B. Lopez-Swafford, *Management of the Space Physics Analysis Network (SPAN)*, Second Edition, NSSDC Technical Report, January 1987.

Ha, T., B. Lopez-Swafford, V. L. Thomas, and J. L. Green, *Space Physics Analysis Network Node Directory (The Yellow Pages)*, NSSDC Technical Report, January 1987.

Lopez-Swafford, B., and P. Gary, *SPAN: Network Security Guide*, NSSDC Technical Report, January 1987.

Thomas, V. L., J. L. Green, W. H. Warren Jr., and B. Lopez-Swafford, *SPAN: Astronomy and Astrophysics*, NSSDC Technical Report, January 1987.

Thomas, V. L., C. J. Koblinsky, F. Webster, V. Zlotnicki, and J. L. Green, *SPAN: Ocean Science*, NSSDC Technical Report, January 1987.

Green, J. L., R. McGuire, and B. Lopez-Swafford, *A Communications Model for the ISTP Correlative Data Analysis Network*, NSSDC Technical Report, January 1987.

Green, J. L., R. McGuire, and B. Lopez-Swafford, *A Communications Model for an ISAS to NASA SPAN Link*, NSSDC Technical Report, January 1987.

Koblinsky, C. (ed.), *Satellite Ocean Data System Science Working Group: Report of the SODSSWG Network Panel for 1986*, NASA/GSFC Technical Report, May 1987.

Ha, T., V. L. Thomas, and J. L. Green, *Space Physics Analysis Network Node Directory (The Yellow Pages)*, Second Edition, NSSDC Technical Report 87-20, October 1987.

Green, J. L., "The Space Physics Analysis Network," *Computer Physics Communications*, North-Holland, Amsterdam, 49, 205-213, 1988.

Sanderson, T., "The European Space Physics Analysis Network," *Proceedings from the 21st ESLAB Symposium*, Bolkesjo, Norway, ESA SP-275, 1988.

Ha, T., P. L. Sisson, V. L. Thomas, and J. L. Green, *Space Physics Analysis Network Node Directory (The Yellow Pages)*, Third Edition, NSSDC/WDC-A-R&S 88-04, March 1988.

Sanderson, T., M. Albrecht, W. Baumjohann, P. Benvenuti, J. Franks, G. Green, J. L. Green, M. A. Hapgood, C. Harvey, N. van der Heijden, E. Jabs, P. A. Lindqvist, D. de Pablo, F. Pasian, and G. Veldman, "The European Space Physics Analysis Network," *ESA Bulletin*, No. 53, p. 45, February 1988.

Green, J. L., "NSSDC Applications for Computer Networking," Proceedings from the 1988 Workshop on Geophysical Informatics, Moscow (to be published).

Green, J. L., "Communications Among Data and Science Centers," Proceedings from the 1988 Workshop on Geophysical Informatics, Moscow (to be published).

Green, J. L., and P. L. Sisson, "The 'Father Christmas' Worm," 1989 12th National Computer Security Conference Proceedings (to be published).

Thomas, V. L., and J. L. Green, "SPAN - A Revolutionary Tool for Scientific Research," *Journal of the National Technical Association*, p. 45, Winter 1989.

SPAN and DSUWG Newsletter Reports

Greenstadt, E. W., and J. L. Green, "Data Systems Users Working Group," *EOS* (meeting report), 62, 50, 1981.

Baker, D. N., R. D. Zwickl, and J. L. Green, "NASA Data Systems Users: Recommendations for Improved Scientific Interactions," *EOS* (meeting report), 65, 46, February 1984.

Green, J. L., D. N. Baker, and R. D. Zwickl, "SPAN Pilot Project Report," *EOS* (meeting report), 65, 777, October 1984.

Green, J. L., D. N. Baker, and R. D. Zwickl, "DSUWG Meeting Report," *EOS* (meeting report), 66, 565, July 1985.

Green, J. L., and R. D. Zwickl, "Data Systems Users Working Group," *EOS* (meeting report), 67, 100, February 1986.

Winterhalter, S., "Technology Development Activities Support Voyager Uranus Encounter: 1. SPAN Accelerated Data Transfer to Remote Voyager Scientists, 2. PDS Increased Quick-Look Analysis for Voyager Scientists," *Information Systems Newsletter*, 5, p. 1, March 1986.

Peters, D. J., "Riding the PSCN Backbone with SPAN," *Information Systems Newsletter*, 5, p. 18, March 1986.

Thomas, V. L., and J. L. Green, "Data Systems User Group Advises SPAN," *Information Systems Newsletter*, 6, p. 20, June 1986.

Thomas, V. L., and J. L. Green, "SPAN Rapid Growth Due to Worldwide Networking Requests," *Information Systems Newsletter*, 7, p. 12, September 1986.

Thomas, V. L., and J. L. Green, "Data Center Hosts Data Systems User Group," *NSSDC News*, 3, p. 2, September 1986.

Thomas, V. L., and J. L. Green, "SPAN's Rapid Development Spans Disciplines and Nations," *NSSDC News*, Vol. 2, 4, p. 13, December 1986.

Lopez-Swafford, B., "SPAN Information Center Open for Business," *Information Systems Newsletter*, 8, p. 5, December 1986.

Baker D. N., V. L. Thomas, D. L. Gallagher, J. L. Green, J. H. King, and R. D. Zwickl, "DSUWG Meeting Report," *EOS* (meeting report), 68, 45, January 20, 1987.

Gallagher, D. L., and V. L. Thomas, "SPAN Community Renews Commitment to Electronic Information Exchange," *Information Systems Newsletter*, 9, p. 8, March 1987.

Thomas, V. L., "NSSDC Hosts Data Systems Users Working Group," *NSSDC News*, Vol. 3, 1, p. 9, March 1987.

Dueck, S., "ISO Connects World-Wide Communication Network in Support of Supernova," *Information Systems Newsletter*, 10, p. 1, June 1987.

Thomas, V. L., J. L. Green, and L. Z. Porter, "SPAN Links Astronomers Around the Globe in Support of Supernova," *Information Systems Newsletter*, 10, p. 4, June 1987.

Thomas, V. L., J. L. Green, and B. McLendon," SPAN Provides Electronic Transmission of Supernova Data," *NSSDC News*, Vol. 3, 2, p. 1, June 1987.

Green, J. L., "Message from the Director: Government Takes Steps to Curtail Illegal Computer Network Access," *NSSDC News*, Vol. 3, 3, p. 1, September 1987.

Green, J. L., "Message from the Director: European Authorities Seize Evidence of Unauthorized Computer Access by German 'Hacker Club'," *NSSDC News*, Vol. 3, 4, p. 1, December 1987.

Thomas,V. L., and J. L. Green, "Computer Hackers Attack SPAN," *Information Systems Newsletter*, 12, p. 36, January 1988.

Thomas, V. L., and J. L. Green, "Space Physics Analysis Network: A Quick-Reaction Capability," *Information Systems Newsletter*, 13, p. 30, April 1988.

Koblinksy, C. J., and J. Choy, "NASA/NSF/NCAR Computer Gateway," *EOS*, Vol. 69, p. 833, September 1988.

Green, J. L., "The Use of SPAN for Rapid Access to IUE Data," *Information Systems Newsletter*, 14, p. 39, August 1988.

Sanderson, T., "Major Milestones for European SPAN," *Information Systems Newsletter*, 14, p. 41, August 1988.

Thomas, V. L., and J. L. Green, *SPAN Justifications*, NSSDC 88-22, 1988.

Thomas, V. L., and J. L. Green, " 'SPANNING' the Globe," *Information Systems Newsletter*, 15, p. 21, December 1988.

Zwickl, R. D., and V. L. Thomas, "SPAN: Riding the Winds of Change," *Information Systems Newsletter*, March 1989 (to be published).

Peters, D. J., "NSI Interoperable Gateway," *Information Systems Newsletter*, March 1989 (to be published).

VI. Acknowledgments

The members of the Data Systems Users Working Group (DSUWG), who fully support the SPAN management team, providing much of their time to make the system successful, are gratefully acknowledged. The authors would also like to acknowledge the Information Systems Office and the Communication and Data Systems Division (especially Sandy Bates) at NASA Headquarters for their continued financial support for SPAN.

We would also like to send out sincerest thanks to

Linda Porter, MSFC, Huntsville, Alabama

Trevor Sanderson, ESTEC, The Netherlands

for their useful suggestions for the layout of this document.

APPENDIX

Accessing SPAN from Non-SPAN Nodes
(Dated August 1989)

August 1989

ACCESSING SPAN FROM NON-SPAN NODES

by
Patricia L. Sisson
Todd F. Butler
David J. Peters
Science Applications Research
Lanham, Maryland

for the
National Space Science Data Center (NSSDC)
National Aeronautics and Space Administration
Goddard Space Flight Center
Greenbelt, Maryland 20771

If your computer is on a network other than the Space Physics Analysis Network (SPAN), you can still reach the Space Physics Analysis Network Online Data Base System (SPAN_NIC).

A list of Internet mail addresses and a brief tutorial on how to access the SPAN_NIC account follows. **PLEASE NOTE THAT THIS LIST IS CURRENT AS OF August 18, 1989. THE LATEST UPDATED ONLINE VERSION CAN BE FOUND IN THE SPAN_NIC ACCOUNT AT THE NATIONAL SPACE SCIENCE DATA CENTER (NSSDC).**

SPAN-to-HEPNET
HEPNET is reachable in DECnet areas 41, 42, 43

****

SPAN-to-DAN
DAN is reachable in DECnet area 18

****

SPAN-to-THENET
TO: UTSPAN::UTADNX::hostname::username

THENET-to-SPAN
TO: UTADNX::UTSPAN::hostname::username

SPAN-to-ARPAhost on THENET
TO: UTSPAN::UTADNX::MAILER%"username@hostname.domain"

ARPAhost/THENET-to-SPAN
TO: hostname::username%UTSPAN.DECNET@UTADNX.CC.UTEXAS.EDU

(THENET = The University of Texas Network)

****

SPAN-to-UARS
TO: NSSDCA::hostname::username
TO: VIRGO::hostname::username
TO: SPRLC::hostname::username

UARS-to-SPAN
TO: NSSDCA::hostname::username
TO: VIRGO::hostname::username
TO: SPRLC::hostname::username

****

SPAN-to-SDSC
TO: SDSC::"username@hostname.SDSCNET"

SDSC-to-SPAN
TO: username@hostname.SPAN

****

SPAN-to-SCFMVS (IBM 3081 at the Goddard Space Flight Center)
TO: DFTNIC::JNET%"username@SCFMVS"

In Australia and New Zealand

Anglo-Australian Observatory (Epping, NSW, Australia) from SPAN

SPAN-to-AAOEPP

```
     TO: NSSDCA::PSI%AAOEPP::user
     TO: SSL::PSI%AAOEPP::user
```

SPAN-to-EPP75A

```
     TO: NSSDCA::PSI%EPP75A::user
     TO: SSL::PSI%EPP75A::user
```

****

Mount Stromlo & Siding Spring Observatory (Canberra, NSW, Australia)

SPAN-to-MSSSO

```
     TO: NSSDCA::PSI%MSSSO::user
```

INTERnet-to-MSSSO

```
     TO: NSSDCA::SMTP%"username@MSO.ANU.OZ.AU" (see other gateways)
```

****

Mount Stromlo & Siding Spring Observatory (Canberra, NSW, Australia)
[ANU's computer services center]]

SPAN-to-MSO

```
     TO: NSSDCA::PSI%MSO::user
```

****

University of Tasmania in Australia (at node DIEMEN)

SPAN-to-UNIVERSITY OF TASMANIA

```
     TO:  STAR::"munnari!physvax.utas.oz.au!USERNAME@uunet.uu.net"
     TO:  IO::"munnari!physvax.utas.oz.au!USERNAME@uunet.uu.net"
     TO:  FEDEX::"munnari!physvax.utas.oz.au!USERNAME@uunet.uu.net"
     TO:  NSFGW::"munnari!physvax.utas.oz.au!USERNAME@uunet.uu.net"
     TO:  PSI%EPP75A::acsnet%"USERNAME@physvax.utas.oz"
```

GSFCMAIL-to-TASMANIA

```
To:     [postman/nasa] nasamail/usa <ret>
Subj:
Text:   to: <munnari!physvax.utas.oz.au!USERNAME@uunet.uu.net>
```

UNIVERSITY OF TASMANIA-to-SPAN

Use the normal INTERNET mail syntax.

****

SPAN-to-AUSTRALIA'S NODE PHYSVAX

```
     To:  STAR::"munnari!physvax.oz.au!USERNAME@uunet.UU.NET"
```

AUSTRALIA'S NODE PHYSVAX-to-SPAN

Use the normal INTERNET mail syntax.

S E L E C T E D X.25 W O R L D D E C N E T H O S T S

****
University of Newcastle (Newcastle, NSN, Australia) from SPAN
SPAN-to-NEWCASTLE
To: NSSDCA::PSI%NEWCASTLE::username

****
University of Otago (Dunedin, New Zealand) from SPAN
SPAN-to-OTAGO
TO: NSSDCA::PSI%OTAGO::user
TO: SSL::PSI%OTAGO::user

****
University of Canterbury (Christchurch, New Zealand) from SPAN
SPAN-to-UNICANT
TO: NSSDCA::PSI%UNICANT::user

In The Netherlands
Dwingeloo Observatory (Netherlands) from SPAN
SPAN-to-DWINGELOO
To: NSSDCA::PSI%DWINGELO::user

In Canada
Dominion Astrophysical Observatory (Victoria, Canada)
SPAN-to-DAO
TO: NSSDCA::PSI%DAO::user

In Chile
Cerro Tololo Inter-American Observatory (La Serena, Chile) from SPAN
SPAN-to-CTIOV1
TO: NSSDCA::PSI%CTIOV1::user
TO: SSL::PSI%CTIOV1::user
CTIOV1-to-SPAN
To: CTIOV1::PSI%NSSDCA::host::user
To: CTIOV1::PSI%SSL::host::user

S E L E C T E D X.25 W O R L D D E C N E T H O S T S

In Japan

Geophysical Institute, Kyoto University (Kyoto, JAPAN)

SPAN-to-KYOTO

TO: NSSDCA::PSI%KYOTO::user

TO: SSL::PSI%KYOTO::user

Hiraiso Solar Terrestrial Research Center, Communications Research Laboratory (Ibaraki, JAPAN)

SPAN-to-CRLHI

TO: NSSDCA::PSI%CRLHI::user

In West Germany

Deutsche Forshungnetz, West Germany

SPAN-to-DFN

TO: FEDEX::"user@ZPL.DFN.DBP.DE"

DFN-to-SPAN

TO: user%host.SPAN@STAR.STANFORD.EDU

****

NOTE: The names that appear after the PSI%_____ are defined on our host. We have created PSI logicals to make sending mail to certain sites easier on the end user. Please remember that these names equate to a DTE # (pad number) - these logicals are strictly host dependent.

P U B L I C P A C K E T M A I L S Y N T A X

SPAN-to-NASAMAIL

```
AMES::"user@NASAMAIL"
```

NASAMAIL-to-SPAN

```
Command?  compose
To:  POSTMAN                          !--POSTMAN account will
CC:                                      AUTOMATICALLY send your
Subject:                                 message...
Text:                                 !--start your message text
TO: user%host@ames-io.arpa            !--MUST BE FIRST LINE
                                         IN YOUR MAIL MESSAGE
type the rest of your message here !--finish your message
```

****

Examples:

To send a mail message to the user SPAN_MGR from SPAN to NASAMAIL, you would do the following:

```
To:  AMES::"SPAN_MGR@NASAMAIL"
```

To send a mail message from NASAMAIL to the user NETMGR on SPAN, you would do the following:

```
Command?  compose
To:  POSTMAN
CC:
Subject:
Text:
TO: NETMGR%NSSDCA@ames-io.arpa
type the rest of your message here
```

P U B L I C P A C K E T M A I L S Y N T A X

SPAN-to-GSFCMAIL

```
     AMES::"user@GSFCMAIL"
```

GSFCMAIL-to-SPAN

```
     Command?  compose
     To:  [POSTMAN/NASA] NASAMAIL        !--POSTMAN account on NASAmail will
     CC:                                    AUTOMATICALLY send your
     Subject:                               message...
     Text:                               !--start your message text
     TO: user%host@ames-io.arpa          !--MUST BE FIRST LINE OF
                                             YOUR TEXT MESSAGE
     type the rest of your message here
```

or you can use the following OPTIONAL SYNTAX (in place of user%host@ames-io.arpa)

```
     To:  user@host.SPAN.NASA.GOV
```

****

Examples:

To send a mail message to the user SPAN_MGR at GSFCMAIL from any SPAN host, you would do the following:

```
     To:  AMES::"SPAN_MGR@GSFCMAIL"
```

To send a mail message from GSFCMAIL to the user NETMGR on the SPAN node NSSDCA, you would do the following:

```
     Command?  compose
     To:  [POSTMAN/NASA] NASAMAIL
     CC:
     Subject:
     Text:
     TO: NETMGR%NSSDCA@ames-io.arpa
     type the rest of your message here
```

Or use the optional syntax:

```
     Command?  compose
     To:  [POSTMAN/NASA] NASAMAIL
     CC:
     Subject:
     Text:
     TO: NETMGR@NSSDCA.span.nasa.gov
     type the rest of your message here
```

P U B L I C P A C K E T M A I L S Y N T A X

GSFCMAIL-to-NASAMAIL

```
Command?  compose
To:  [user/NASA] NASAMAIL
cc:
Subject:
Text:
type in your message
```

NASAMAIL-to-GSFCMAIL

```
Command? compose
To:  [user/GSFCMAIL] GSFC/USA
CC:
Subject:
Text:                                  !--start your message text
   type your message here
```

P U B L I C P A C K E T M A I L S Y N T A X

SPAN-to-TELEMAIL

```
        To:  AMES::"user/org@TELEMAIL.NASA.GOV"
or      To:  JPLLSI::"user@TELEMAIL@ORION.ARPA"
```

TELEMAIL-to-SPAN

```
        Command?  compose
        To:  [POSTMAN/NASA] NASAMAIL        !--POSTMAN account will
        CC:                                    AUTOMATICALLY send your
        Subject:                               message...
        Text:                               !--start your message text
        TO: user%host@VLSI.JPL.NASA.GOV     !--MUST BE FIRST LINE OF
                                               YOUR TEXT MESSAGE
        type your message here

or
        command?  compose
        To:  user@host.SPAN
```

TELEMAIL-to-ARPA

```
        command?  compose
        To:  user@host.ARPA
```

TELEMAIL-to-BITNET

```
        command?  compose
        To:  [POSTMAN/NASA] NASAMAIL
        cc:
        Subject:
        Text
        TO:  user@host.BITNET             !--MUST BE FIRST LINE OF
                                             YOUR TEXT MESSAGE
```

P U B L I C P A C K E T M A I L S Y N T A X

SPAN-to-OMNET

```
     IO::"username%OMNET@AMES.ARC.NASA.GOV"
or   IO::"username%OMNET@AMES"
```

OMNET-to-SPAN

```
     Command?  compose
     To:  [POSTMAN/NASA] NASAMAIL          !--POSTMAN account will
     CC:                                      AUTOMATICALLY send your
     Subject:                                 message...
     Text:                                 !--start your message text
     TO: user%host.SPAN@IO.ARC.NASA.GOV    !--MUST BE FIRST LINE
                                              IN YOUR MAIL MESSAGE
     type your message here                !--finish your message
```

****

Examples:

To send a mail message to the support office at OMNET from any SPAN node, you would do the following:

```
     To:  IO::"omnet.service%OMNET@MAIL"
     To:  IO::"omnet.service%OMNET@AMES.ARC.NASA.GOV"
or   To:  IO::"omnet.service%OMNET@AMES.ARPA"
```

To send a mail message from OMNET to the user NETMGR on the SPAN host NSSDCA, you would do the following:

```
     Command?  compose
     To:  [POSTMAN/NASA] NASAMAIL
     CC:
     Subject:
     Text:
     TO: NETMGR%NSSDCA@ames-io.arpa
     type the rest of your message here
```

****

OMNET is an electronic mail management company. It provides communications consulting services. OMNET's SCIENCEnet is a communications network for International R & D companies.

I N T E R N E T M A I L S Y N T A X

SPAN-TO-INTERNET

```
To:      NSSDCA::SMTP%"user@host.domain"          ! GSFC Gateway
To:      DFTNIC::EXOS%"user@host.domain"          ! GSFC Gateway
To:      AMES::"user@host.domain"                 ! AMES Gateway
To:      STAR::"user@host.domain"                 ! STANFORD Gateway
To:      WITCH::"user@host.domain"                ! JPL Gateway
To:      SDSC::"user@host.domain"                 ! U of CALIF/SAN DIE

To send to user INS_AJPI at host JHUNIX.HCF.JHU.EDU (domain EDU)
         To:     DFTNIC::EXOS%"ins_ajpi@jhunix.edu"
```

INTERNET-TO-SPAN

```
To:      user%host@NSSDCA.GSFC.NASA.GOV           ! GSFC Gateway
To:      user%host.SPAN@DFTNIC.GSFC.NASA.GOV      ! GSFC Gateway
To:      user@host.span.nasa.gov                  ! AMES Gateway
To:      user%host.SPAN@STAR.STANFORD.EDU         ! STANFORD Gateway
To:      user%host.SPAN@WITCH.JPL.NASA.GOV        ! JPL Gateway
To:      user%host.SPAN@SDS.SDSC.EDU              ! U of CALIF/SAN DIE

To send to user NETMGR at host NSSDCA.GSFC.NASA.GOV (domain GOV)
         To:     netmgr%nssdca.SPAN@STAR.STANFORD.EDU
```

==========

NOTES:

```
Gateways are at the following sites:
         GSFC    = Goddard Space Flight Center; Greenbelt, MD
                   contact for NSSDCA:  NCF::NETMGR
                                        NETMGR@NSSDCA.GSFC.NASA.GOV
                   contact for DFTNIC:  DFTNIC::LEV
                                        LEV@IAFBIT.GSFC.NASA.GOV
         AMES    = AMES Reserach Center; Moffett Field, CA
         STAR    = Stanford University; Stanford, CA
         JPL     = Jet Propulsion Laboratory; Pasadena, CA
         U of CA = University of California; San Diego, CA
```

****

*ARPA (Internet) - **ARPANET** (Advanced Research Projects Agency) is the oldest computer network in the U.S. Sponsored by the Department of Defense, it exists to facilitate sharing of resources at participating organizations and collaboration among researchers, as well as to provide a testbed or new developments in networking.*

N S F n e t M A I L S Y N T A X

SPAN-to-NSFnet

```
To:  NSFGW::"host.domain!user"
```

NSFnet-to-SPAN

```
To:  user%host.span@longs.ucar.edu
```

****

NSFnet - Operated by the National Science Foundation; based on the TCP/IP network protocol. The above gateway is located at NCAR, Scientific Computing Division (SCD), and runs on a MicroVAX II (ULTRIX operating system).

B I T N E T M A I L S Y N T A X

SPAN-TO-BITNET & EARN

```
        To:      DFTNIC::JNET%"user@host"
        To:      STAR::"user%host.BITNET@CUNYVM.CUNY.EDU"
or      To:      STAR::"user@host.BITNET"
        To:      LSUVAX::"IN%""user@host.BITNET"""

        To send to user INS_AJPI at host JHUVMS.HCF.JHU.EDU (domain EDU)
                 To:     DFTNIC::JNET%"ins_ajpi@jhuvms.hcf.jhu.edu"
```

BITNET & EARN-TO-SPAN

```
        To:      user%host.SPAN@DFTBIT                        ! DFTNIC Gateway
        To:      user%host.SPAN@STAR.STANFORD.EDU
        To:      user%host.SPAN@VLSI.JPL.NASA.GOV
        To:      user%host.SPAN%VLSI.JPL.NASA.GOV@HAMLET.CALTECH.EDU
        To:      user%host.SPAN@SDSC.BITNET
        To:      user%host@UK.AC.EARN-RELAY
        To:     user%host.SPAN@LSUVAX.LSU.EDU

        To send to user NETMGR at host NSSDCA.GSFC.NASA.GOV (domain GOV)
                 To:     NETMGR%nssdca.SPAN@DFTBIT
```

==========

NOTES:

```
        Information on DFTNIC Gateway:
                 DFTNIC = Goddard Space Flight Center; Greenbelt, MD
                          Building 28
                          Contact:  DFTNIC::LEV    (DECNET address)
                                    LEV%DFTBIT     (BITNET address)
```

****

BITNET/EARN - BITNET (Because It's Time NETwork) links universities and research centers in the United States and Europe. In Europe, BITNET is called EARN (European Academic Research Network), and it is an integral part of BITNET, therefore, all European nodes are listed in the U.S. and vice versa.

J A N E T M A I L S Y N T A X

SPAN-TO-JANET

```
To:  JPLLSI::"user%host@UKACRL.BITNET"        (Most reliable)
To:  19527::CBS%"janet-address::user"
To:  STAR::"user%host.BITNET@JADE.BERKELEY.EDU"
To:  JPLLSI::"user%host@NSS.CS.UCL.AC.UK"
To:  STAR::"user%host@NSS.CS.UCL.AC.UK"
To:  ECD1::MAILER
     (Then type the following as the FIRST line in the message)
     X-fwd-to: JANET%host::user     (MAIL TO JANET)
```

To send to user CYM at host UK.AC.RL.IB

```
     To:  JPLLSI::"cym@uk.ac.rl.ib@UKACRL.BITNET"
```

JANET-TO-SPAN

```
To:  user%host.SPAN%VLSI.JPL.NASA.GOV@UK.AC.UCL.CS.NSS
To:  "span_node::user"@UK.AC.gateway
To:  user%host.SPAN%EDU.STANFORD.STAR@UK.AC.UCL.CS.NSS
To:  user%host.SPAN%EDU.STANFORD.STAR@UK.AC.RL.EARN
To:  user%host.SPAN%EDU.STANFORD.STAR@UK.AC.EARN-RELAY
To:  user%host.SPAN@STAR.STANFORD.EDU@UK.AC.UCL.CS.NSS
```

To send to user NETMGR at host NSSDCA.GSFC.NASA.GOV

```
     To:  NETMGR%nssdca.SPAN%VLSI.JPL.NASA.GOV@UK.AC.UCL.CS.NSS
```

NOTE: In the past, the JANET gateway needed to have the address element (the part immediately left of the @) in U.K. order - with the domain first, then organization, location, etc. It will now handle addresses in both U.K. and U.S. (traditional ARPA) order; i.e.

```
     user%host.SPAN%VLSI.JPL.NASA.GOV@UK.AC.EARN-RELAY   (U.S.)
and  user%host.SPAN%GOV.NASA.JPL.VLSI@UK.AC.EARN-RELAY   (U.K.)
```

are equally acceptable.

****

JANET - JANET (Joint Academic NETwork) was created to provide network links to institutions in the United Kingdom and net access to the outside world. For more information, see the document "ACCESSING SPAN FROM NON-SPAN NODES: A Guide for Janet Users" by Mike Hapgood at the Rutherford Appleton Laboratory.

M F E N E T M A I L S Y N T A X

SPAN-to-MFENET

```
TO: JPLLSI::"user%host.MFENET@NMFECC.ARPA"
TO: NSSDCA::SMTP%"user%host.MFENET@NMFECC.ARPA"
TO: SDSC::"user@host.MFENET"
```

MFENET-to-SPAN

```
TO: user%host.SPAN@VLSI.JPL.NASA.GOV
TO: user%host.SPAN@SDS
```

****

MFENET - MFEnet stands for the Magnetic Fusion Energy network. It links energy researchers at educational and research institutes around the country. The network is connected to the National Computer Center at Lawrence Livermore National Lab. The computer center houses five Cray computers, which are available or use by those connected to MFEnet. The National Magnetic Fusion Energy Computer Center (NMFECC) at Livermore is responsible for the development and maintenance of the network.

J U N E T M A I L S Y N T A X

SPAN-to-JUNET

```
TO: STAR::"user%host@RELAY.CS.NET"
TO: NSSDCA::SMTP%"user@host"
```

JUNET-to-SPAN

User normal Internet MAIL syntax

****

JUNET - The purpose of JUNET is to promote information exchange among Japanese researchers and with researchers outside Japan. It is organized by a group of students at Tokyo Institute of Technology.

U U C P M A I L S Y N T A X

SPAN-to-UUCP

```
        TO: IO::"host2!host1!host!user@NOAO.ARIZONA.EDU"
        TO: NSSDCA::SMTP%"host2!host1!host!user@NOAO.ARIZONA.EDU"
        TO: JPLLSI::"host2!host1!host!user@NOAO.ARIZONA.EDU"
(ex:    TO: IO::"kddlab!yscvax!yamada@NOAO.ARIZONA.EDU")
        ************************** NOTE *************************
        UUNET.UU.NET can be used in place of NOAO.ARIZONA.EDU
```

UUCP-to-SPAN

```
        TO: user%host.SPAN@VLSI.JPL.NASA.GOV
        TO: user%host@AMES-IO.ARPA
(ex:    TO: kddlab!netmgr%nssdca@ames-io.arpa)
```

****

UUCP - UUCP stands for UNIX to UNIX CoPy. It connects a very diverse set of machines and users, with most host machines running the UNIX operating system.

A C S N E T M A I L S Y N T A X

SPAN-TO-ACSNET

```
To:   JPLLSI::"user@host.OZ.AU"
To:   NSSDCA::SMTP%"user%MUNNARI.OZ.AU@UUNET.UU.NET"
To:   NSSDCA::PSI%505228621001::ACSNET%"user@host"
To:   NSSDCA::PSI%505228621001::IN%"user@host"
```

To send to user POSTMASTER at host MUNNARI.OZ.AU

```
To:   JPLLSI::"postmaster@munnari.OZ.AU"
```

ACSNET-TO-SPAN

```
To:   user%host.SPAN@VLSI.JPL.NASA.GOV
```

To send to user NETMGR at host NSSDCA.GSFC.NASA.GOV

```
To:   netmgr%nssdca.SPAN@VLSI.JPL.NASA.GOV
```

****

ACSNET - ACSNET (Australian Computer Science Network) is the main network in Australia. It is based on the University of Sydney UNIX Network (SUN) software.

A C C E S S I N G T H E
S P A C E P H Y S I C S A N A L Y S I S N E T W O R K
O N - L I N E D A T A B A S E S Y S T E M (SPAN_NIC)

SPAN_NIC is a menu-driven Network Information Center data base system designed to help SPAN users with questions about the nodes connected to SPAN. This system also gives the latest up-to-date MAIL syntaxes for INTERNET mail. It also tells the users how to access other NICs, along with giving the SPAN users NEWS about the network and what links are down.

DECnet		INTERNET		
NODEnumber	NODEname	Number	Name	System Type
6.132 (6276)	NSSDC	128.183.10.59	NSSDC.GSFC.NASA.GOV	VAX 11/780
6.133 (6277)	NSSDCA	128.183.10.4	NSSDCA.GSFC.NASA.GOV	VAX 8650

In the examples provided, remember you can either enter NSSDC or NSSDCA, depending on which machine you want to access.

To access NSSDC Computer Facility:

- from DECnet nodes:
  (e.g.,SPAN)

system prompt	you type
$	SET HOST NSSDCA <CR>
Username:	SPAN_NIC <CR>

- from TCP/IP nodes:
  (i.e., Internet)
  [command is the same for all TCP/IP nodes]

system prompt	you type
$ or %	TELNET NSSDCA.GSFC.NASA.GOV <CR>
Username:	SPAN_NIC <CR>

- for dial-in:
  First, dial the phone number for the Rolm modem pool (baud rate is automatically self-adjusting):
  - for 8 bit/no parity (8 bits, 1 stop bit) ===> (301)286-9000
  - for even parity (7 bits, 1 stop bit) ===> (301)286-9500

system prompt	you type
ENTER NUMBER?	nssdca <CR>
DIALING nnnnn	
CALL COMPLETE	<CR>
Username:	SPAN_NIC <CR>

- from Telenet:
  To find the phone number of a Telenet PAD local to the area you are calling from, call the Telenet customer office, toll free, at 1-800-TELENET. First dial into the local Telenet PAD. When the PAD answers, hit several carriage returns until you get a prompt:

system prompt	you type
Terminal=	d1 <CR>
@	id ;32107035/gsfc
Password	036156
Username:	SPAN_NIC

  If you are coming in from overseas, the access method from Telenet is slightly different. At the @ prompt, you will have to enter the following: id ;0311032107035

If you have any questions, please feel free to send mail to NCF::NETMGR, or call (301) 286-7251 or FTS 888-7251 for assistance.

Inquiries concerning network access to SPAN_NIC should be directed to:

Ms. Pat Sisson, SPAN Security Manager
or Mr. Todd Butler, GSFC Routing Center Manager
Network Information Center
National Space Science Data Center
Code 630.2
Goddard Space Flight Center
Greenbelt, Maryland 20771

Telephone: (301)286-7251
FTS 888-7251
SPAN: NCF::NETMGR; NSSDCA::NETMGR; NSSDC::NETMGR
INTERNET: NETMGR@NSSDCA.GSFC.NASA.GOV

****
****

We also have a SPAN passthrough account on the NSSDC Computer Facility. This account allows a user to use our system as a passthrough device to do the following:

go from SPAN to INTERNET and vice versa
go from SPAN to an X.29 host and vice versa
go from TELENET pad to SPAN or INTERNET

The access methods are the same as listed above for the SPAN_NIC account. The only difference is as follows:

Username: SPAN
Password: please call our office for the password

FUTURE ACCESS METHOD FROM TELENET PUBLIC PADS

All TELENET public pad access to the NSSDC computer facility will eventually go through the DACs facility in Huntsville, Alabama. Before using a TELENET public pad, you will need to get a valid NPSS USERID and PASSWORD.

To obtain a USERID and PASSWORD for the NPSS Gateway, please submit the following information to NCF::NETMGR or call (301)286-7251 or FTS-888-7251.

User Name:_____
User Phone:_____
User Address:_____

Employer:_____

Once you get your valid USERID and PASSWORD the steps are as follows:

ERRORS: If you make an error while typing please use the **"Ctrl H"** key to make a correction.

TELENET ACCESS TO SPAN

To find the phone number of a Telenet PAD local to the area you are calling from, call the Telenet customer office, toll free, at 1-800-TELENET.

1) First dial into the local Telenet PAD.

2) When the PAD answers hit several carriage returns until you get the 'Terminal=' prompt <CR> <CR>

system prompt	**you type**
Terminal=	d1 <CR>
@	c NASA <CR>
NASA connected	<CR>
*	logon <CR>
Enter USERID	ENTER your userid IN ALL **CAPS**
Enter PASSWORD	ENTER your password IN ALL **CAPS**
Enter SERVICE	NSSDC <CR>
	Username:

If you have any questions, please feel free to send mail to NCF::NETMGR, or call (301)286-7251 or FTS 888-7251 for assistance.