NASA

MISSION OPERATIONS
AND DATA SYSTEMS DIRECTORATE

GSFC

CONTROL CENTER OPERATIONS

AT THE

GODDARD SPACE FLIGHT CENTER

ROBERT M. CONNERTON
JUNE 19, 1991

N92-12023
513-14
P-22

CONTROL CENTER OPERATIONS AT GSFC

AGENDA

- BACKGROUND
- TECHNICAL CHALLENGES
- NEW DIRECTIONS
- TECHNOLOGY DRIVERS
- SUMMARY

MO&DS DIRECTORATE	CONTROL CENTER OPERATIONS AT GSFC
CODE 500	

BACKGROUND

- o PRESENTLY OPERATING EIGHT MISSIONS OF VARYING COMPLEXITY IN FOUR DIFFERENT CONTROL CENTERS

  - MULTI-MISSION SUPPORT:
    - o COSMIC BACKGROUND EXPLORER (COBE)
    - o GAMMA RAY OBSERVATORY (GRO)
    - o EARTH BUDGET RESOURCE SATELLITE (ERBS)
    - o INTERNATIONAL COMET EXPLORER (ICE)
    - o INTERPLANETARY MONITORING PLATFORM (IMP)

  - DEDICATED SUPPORT:
    - o HUBBLE SPACE TELESCOPE (HST)
    - o INTERNATIONAL ULTRAVIOLET EXPLORER (IUE)
    - o NIMBUS SPACECRAFT (NIMBUS)

  - ATTACHED PAYLOAD SUPPORT
    - o BROAD BAND X-RAY TELESCOPE (BBXRT)
    - o SPACE TEST PAYLOAD (STP)

CONTROL CENTER OPERATIONS AT GSFC

BACKGROUND (CONT.)

- PLANNED SUPPORT FOR NEXT 12 MONTHS
  - o UPPER ATMOSPHERE RESEARCH SATELLITE (UARS)
  - o EXTREME ULTRAVIOLET EXPLORER (EUVE)
  - o SOLAR ANOMALOUS AND MAGNETOSPHERIC PARTICAL (SAMPEX)

- FUTURE ACTIVITY IS A BALANCED MIX OF LARGE OBSERVATORIES AND SMALL QUICK REACTION MISSIONS
  - o DIFFERENT ENVIRONMENTS AND NEEDS
  - o DIFFERENT MISSION DEVELOPMENT LIFECYCLES

MO&DS DIRECTORATE

CODE 500

CONTROL CENTER OPERATIONS AT GSFC

MISSION OPERATIONS ENVIRONMENT

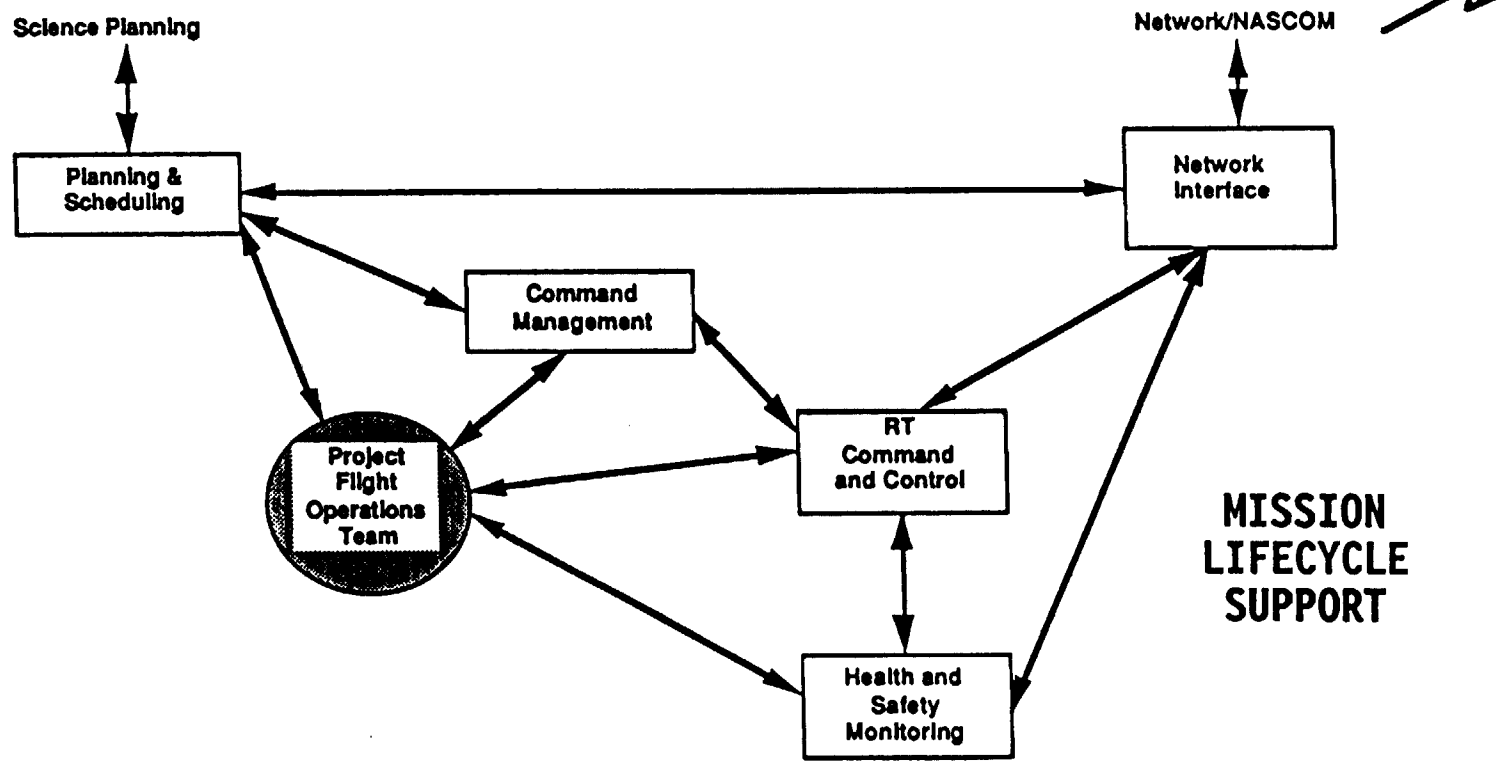

Engineering		System Development			Test	Transition to Operations		Maintenance
System	Opns.	Ground System	Facilities	Flight Software	• system • acceptance • end-to-end • readiness	Training, Simulators	Compatibility Testing	-software -hardware -procedures -data

CONTROL CENTER OPERATIONS AT GSFC

TECHNICAL CHALLENGES

- CENTRALIZED MULTI-MISSION POCC's CAN BE QUICKLY RENDERED OBSOLETE BY THE CONFIGURATION CONTROL EFFORTS REQUIRED TO MINIMIZE INTERACTION BETWEEN MISSIONS AND RAPIDLY CHANGING TECHNOLOGY.

- THE SCIENCE PLANNING INTERFACE IS BECOMING MORE REAL-TIME, DISTRIBUTED, AND COMPLEX. THIS CREATES SECURITY PROBLEMS (E.G. NASA SCIENCE INTERNET).

- USE OF COMMERCIAL SOFTWARE REQUIRES APPROPRIATE PROTOTYPING TO ENSURE SUCCESSFUL APPLICATION.

- SMALL MISSIONS ARE FORCING A SHORT MISSION PREPARATION TIMELINE.

- OPERATIONAL CONSIDERATIONS ARE POSTPONED UNTIL TOO LATE IN THE MISSION LIFECYCLE.

CONTROL CENTER OPERATIONS AT GSFC

HST SCIENCE PLANNING INTERFACE

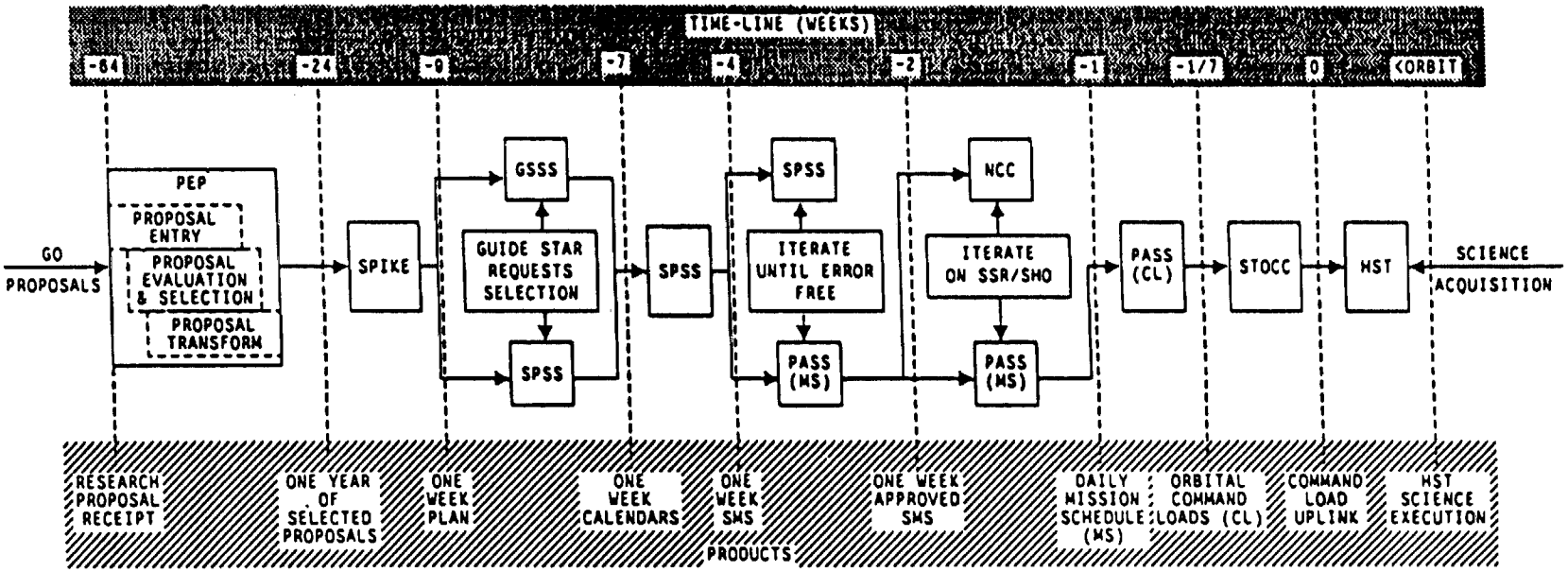

COLOR KEY:

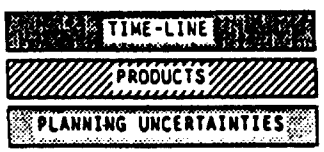

CONTROL CENTER OPERATIONS AT GSFC

NEW DIRECTIONS

- INITIATING OPERATIONS ENGINEERING EFFORT EARLY IN A PROJECT'S LIFE CYCLE: IN PHASE A AND B
- UTILIZING MORE COMMERCIAL SOFTWARE
  - X-WINDOWS, MOTIF, UNIX, OSI
- EMPLOYING WORKSTATIONS AS THE FUNDAMENTAL SYSTEM BUILDING BLOCK
- EMPHASIZING HUMAN FACTORS IN THE USER INTERFACE
- DISTRIBUTING SYSTEMS
  - TRANSPORTABLE PAYLOAD OPERATIONS CONTROL CENTER - SAMPEX, WIND, & POLAR
  - SUPPORT AND MAINTENANCE SYSTEM - HST

MO&DS DIRECTORATE

CODE 500

CONTROL CENTER OPERATIONS AT GSFC

Operations Engineering Life Cycle
(Mission Operations)

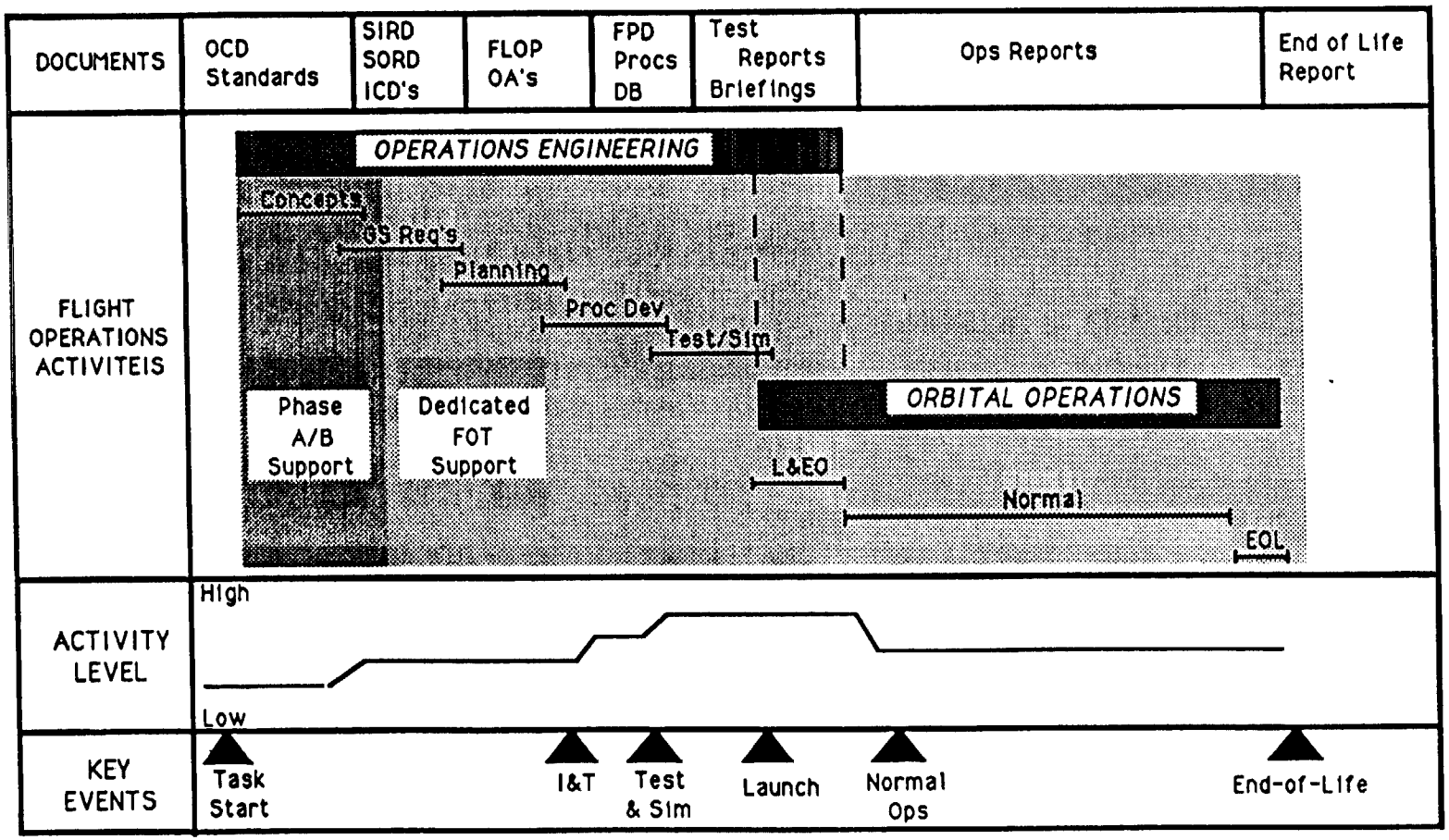

CONTROL CENTER OPERATIONS AT GSFC

TPOCC

- GROUPING OF WORKSTATIONS INTO ISOLATED MISSION CLUSTERS
  - SMALL EXPLORERS
  - INTERNATIONAL SOLAR TERRESTRIAL PHYSICS SERIES
- SEEKING 60% REUSE OF SYSTEMS SOFTWARE BETWEEN MISSION CLUSTERS
- IMPROVED USER INTERFACE THAT IS BASED UPON THE MOTIF SYSTEM
- COMBINATION OF COMMERCIAL AND REUSABLE SYSTEM BUILDING BLOCKS
- EMPLOYS WORKSTATION ARCHITECTURE ON A LAN

MO&DS DIRECTORATE

CODE 500

CONTROL CENTER OPERATIONS AT GSFC

TPOCC

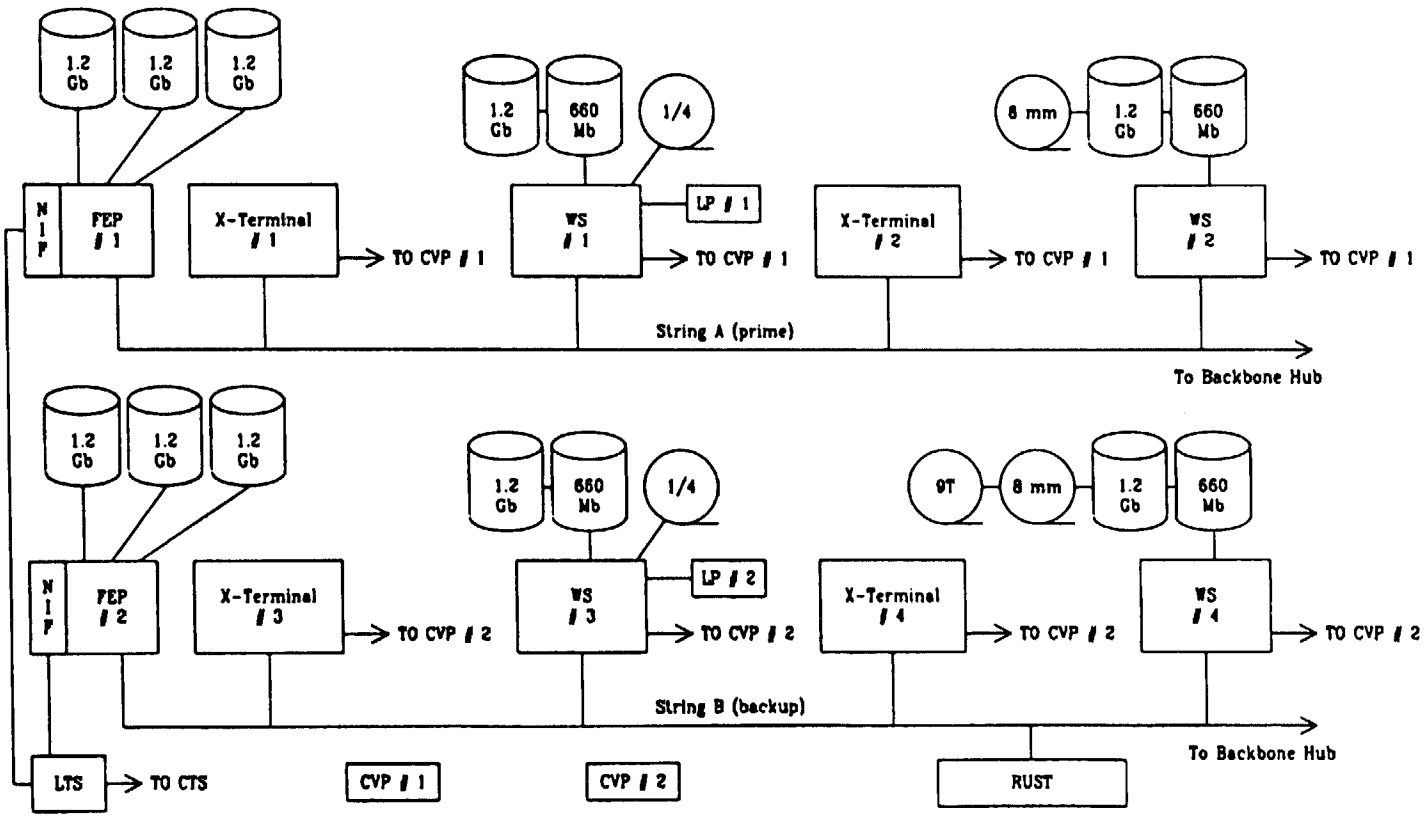

LEGEND:

NIF - Nascom Interface	LTS - Local TPOCC Switch	WS - Workstation
8 mm - 8 mm Helical Scan Tape Drive	CTS - Central TPOCC Switch	660 Mb - 660 Mb Hard Disk
9t - 9 Track Tape Drive	LP - Laser Printer	1.2 Gb - 1.2 Gb Hard Disk
1/4 - 1/4 inch Cartridge Tape Drive	CVP - Video Printer	

CONTROL CENTER OPERATIONS AT GSFC

SAMS

- EVOLUTIONARY TRANSITION OF HST POCC PHASED TO HST REFURBISHMENT MISSION CYCLE.
- PLANNED REPLACEMENT OF ALL POCC SYSTEMS WHILE SIMULTANEOUSLY SUPPORTING OPERATIONS AND REFURBISHMENT PREPARATIONS.
- DISTRIBUTED APPROACH BASELINED.
- CAPABILITY TO ISOLATE USER (FLIGHT OPERATIONS TEAM) SOFTWARE FOR SYSTEM INTEGRITY.
- EMPLOYS PROTOTYPE METHODOLOGY FOR SYSTEM DEVELOPMENT.

MO&DS DIRECTORATE

CODE 500

CONTROL CENTER OPERATIONS AT GSFC

SAMS

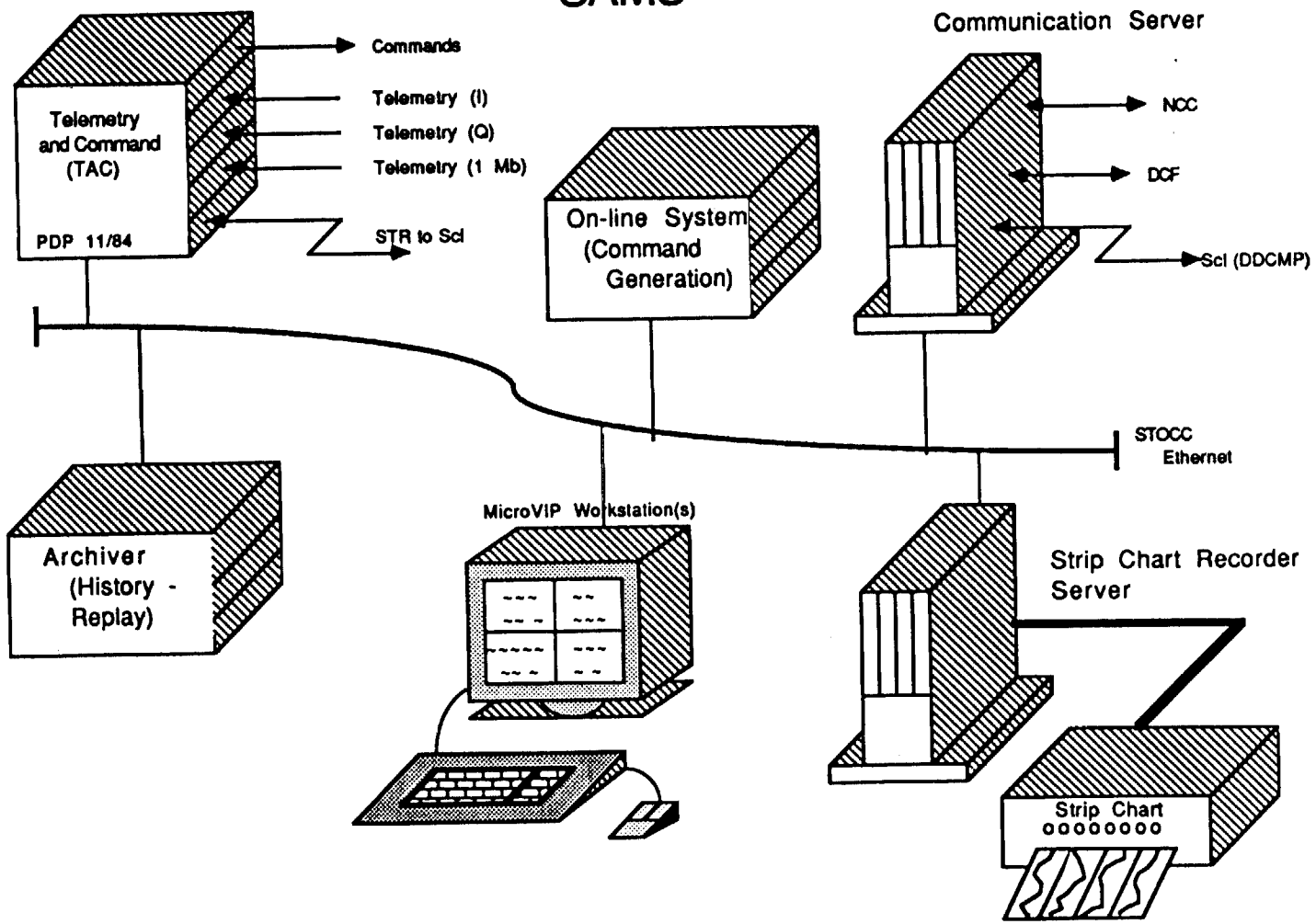

CONTROL CENTER OPERATIONS AT GSFC

SUPPORT AND MAINTENANCE EXAMPLE

- ORIGINALLY
  - BASED ON HST PORTS SOFTWARE (CENTRALIZED ARCHITECTURE)
  - DISTRIBUTED FUNCTIONALITY TO MULTIPLE NODES
  - AUTONOMOUS WORKSTATION
  - DISTRIBUTED ARCHITECTURE

(+)	(-)
INCREASED COMPUTING POWER	REQUIRES INCREASED COORDINATION
FEWER SINGLE POINTS OF FAILURE	- EVENTS
EASILY EXPANDED	- LIMITS
SIMPLIFIED MAINTENANCE	INCREASED COMPLEXITY

CONTROL CENTER OPERATIONS AT GSFC

TECHNOLOGY DRIVERS

- BEGINNING TO APPLY AI TO MISSIONS
  - CLEAR SYSTEM FOR TDRSS INTERFACE TROUBLESHOOTING ON COBE AND GRO
  - BCAUS SYSTEM FOR GRO FOR SAFEHOLD ANALYSIS
- IMPROVING THE OPERATION INTERFACE
  - MAKE MORE FUNCTIONAL
  - EASIER TO USE
- COMMERCIAL LOCAL AREA NETWORKING TO CONNECT WORKSTATIONS
  - ETHERNET
  - MOVING TOWARDS OPEN SYSTEM INTERCONNECT
  - DEVELOPING NETWORK MANAGEMENT CAPABILITIES

CONTROL CENTER OPERATIONS AT GSFC

USER INTERFACE APPLICATIONS

- GENERIC CAPABILITIES
  - GRAPHIC PAGE DEFINITION
  - COMBINATION "WILDCARD" AND TREND ANALYSIS PAGES
  - FLIGHT OPERATIONS TEAM DEFINED DISPLAYS
  - POINT AND CLICK INTERFACE
  - EVENT PROCESSING RELATIVE TO POSITION

- SPECIFIC APPLICATIONS
  - FINE GUIDANCE DISPLAY
  - COMMAND PANEL
  - GRO ATTITUDE

ORIGINAL PAGE IS
OF POOR QUALITY

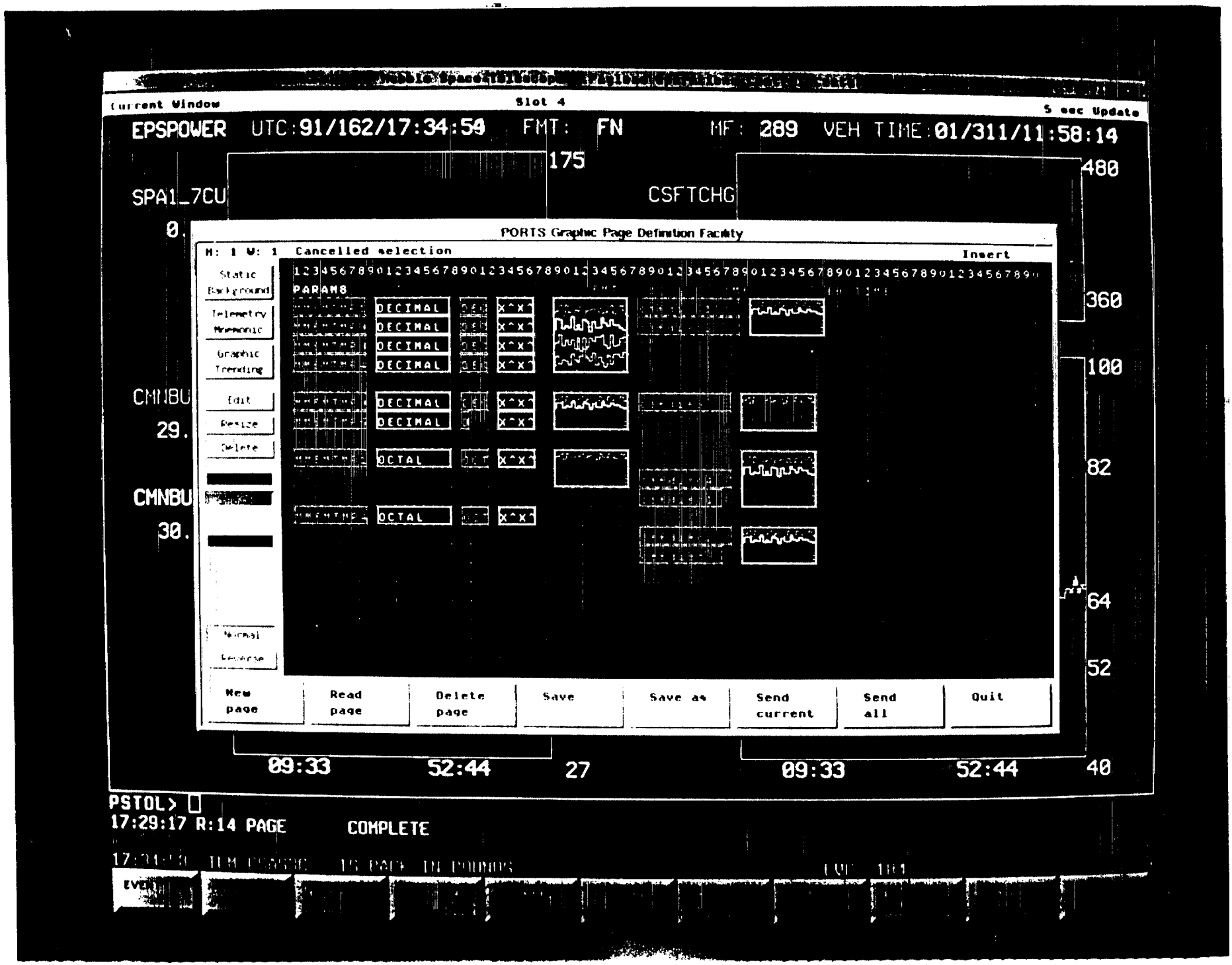

418

ORIGINAL PAGE IS
OF POOR QUALITY

ORIGINAL PAGE IS
OF POOR QUALITY

ORIGINAL PAGE IS
OF POOR QUALITY

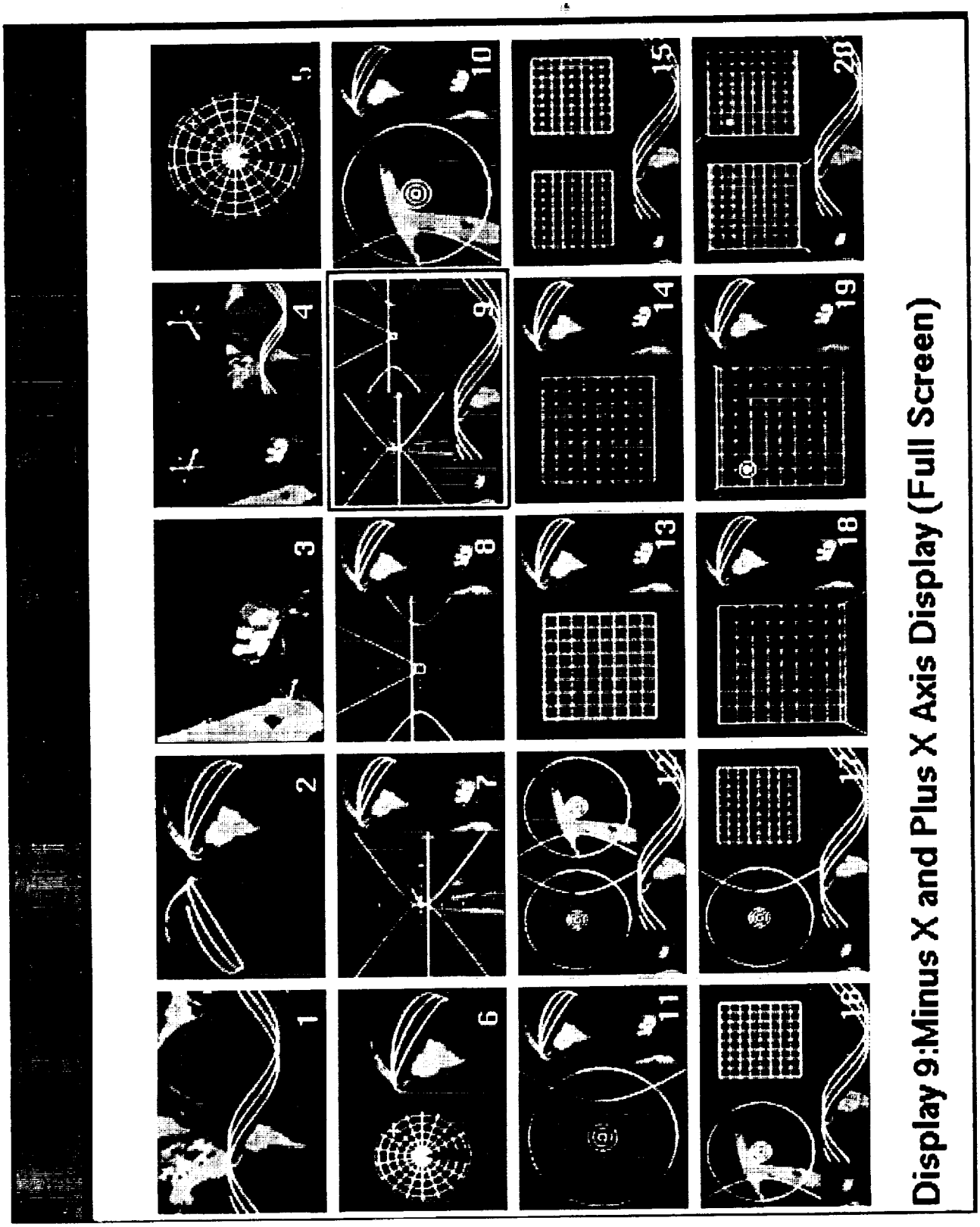

ORIGINAL PAGE IS
OF POOR QUALITY

CONTROL CENTER OPERATIONS AT GSFC

SUMMARY

- SYSTEMS ARE BECOMING MORE DISTRIBUTED
- FORMALIZING THE PROCESS OF OPERATIONS ENGINEERING TO ADDRESS OPERATIONAL ISSUES AS EARLY AS POSSIBLE
- FOCUSING ON GENERIC CAPABILITIES THAT CAN BE TAILORED FOR SPECIFIC MISSION IN ORDER TO SHORTEN DEVELOPMENT TIME
- SUCCESSFULLY HANDLING A DIVERSE RANGE OF MISSIONS