N93-27970
S14-91
158328
p. 13

METALS PRODUCTION

Theodore R. Beck
Electrochemical Technology Corp.

Abstract

Existing procedures for design of electrochemical plants can be used for design of lunar processes taking into consideration the differences in environmental conditions. These differences include: 1/6 Earth gravity, high vacuum, solar electrical and heat source, space radiation heat sink, long days and nights, and different availability and economics of materials, energy, and labor. Techniques have already been developed for operation of relatively small scale hydrogen-oxygen fuel cell systems used in the U.S. lunar landing program. Design and operation of lunar aqueous electrolytic process plants appears to be within the state-of-the-art. Finding or developing compatible materials for construction and designing of fused-magma metal winning cells will present a real engineering challenge.

Introduction

Electrochemical processes are candidates for exploiting lunar rocks to obtain oxygen, metals of construction, and by-product glasses and ceramic materials. Since the Apollo landings, NASA has supported some preliminary studies on electrochemical processing of lunar rocks. One of the first was a laboratory investigation at the Bureau of Mines by Kesterke on electrowinning of oxygen from silicate rocks.[1] Electrolyses were performed with volcanic scoria, fluxed with fluorides to obtain operating temperatures in the range of 1050° to 1250°C, and a current of about 50 amperes. Oxygen was obtained at a current efficiency of about 55%. Solid cathode deposits were formed consisting of metal dendrites of iron, aluminum, silicon, etc., in an electrolyte matrix.

Waldron, Erstfeld, and Criswell reviewed the role of chemical engineering in space manufacturing in 1979.[2] Various suggested processes which might be used on the lunar surface included: electrolysis of molten silicates, carbothermic/silicothermic reduction, carbo-chlorination process, NaOH basic-leach process, and HCl and HF acid-leach process. Aqueous electrochemical processes could be used with the leach process for metals and oxygen recovery. A judgment was not made regarding the optimum route, but it was pointed out that manufacturing in space will require rigorous recycling of materials available only from Earth. Difficulty of recycling probably rules out carbothermic and carbo-chlorination processes.

Haskin and Colson have been evaluating physical-chemical properties of silicate melts and magma electrolysis without fluoride additions.[3] They conducted microscale experiments in the range of tens of milligrams or grams at 1200° to 1500°C. They deposited iron dendrites and silicon-iron phases at the cathode and oxygen at the anode. Waldren and McCullough also reported small-scale silicate melt experiments at 1200°-1400°C in which iron dendrites were deposited on a Kanthal wire or iron was deposited into an iron-silicon melt.[4] Keller, et al., have studied electrolysis of magnetically beneficiated anorthite, from which most of the iron minerals were removed. Electrolysis at 1425°C and 2 amperes yielded aluminum-silicon alloy.

The purpose of the present paper is to describe the methods to scaleup laboratory data to full-scale cell and plant designs. Preliminary design of full-scale plants at an early stage in the technology development can guide research to answer the right questions needed to implement the technology.

Electrochemical Engineering

The design of electrochemical reactors has unique aspects related to the passage of electric current. Electrochemical engineering of cells may be divided into fundamental and applied aspects as shown in Table 1. Through the leadership of academic researchers such as Tobias,[6] over the past four decades, knowledge and methods exist for the quantitative design of electrochemical cells. Availability of modern digital computers has made practical the quantitative treatment of the complex interrelationships of the fundamental aspects in Table 1. The applied aspects of cell and plant design have been elegantly described in MacMullin's classic paper.[7]

Table 1

ELEMENTS OF ELECTROCHEMICAL ENGINEERING

FUNDAMENTAL ASPECTS
- Thermodynamics
- Kinetics
- Transport Processes
- Potential and Flux Distribution
- Mass and Energy Balance
- Scaling Laws

APPLIED ASPECTS
- Construction Materials
- Cell and Plant Design
- Economics, Optimization
- Laboratory and Pilot Plant Experimentation
- Process Control

Under fundamental aspects the following summary descriptions may be given. Thermodynammics tells what reactions are possible at given electrochemical potentials. Electrode kinetics describes the overpotentials required at electrode surfaces for given reaction rates or current densities. The topic of kinetics also includes sequential and parallel homogeneous reaction in the electrolyte. Transport processes describe the rates that reactants and products and heat can be transported to or from an electrode. Mass transport phenomena can become quite complex with simultaneous convection, diffusion and ionic migration and with effects of gas bubbles, porous electrodes, and simultaneous electrolyte reactions. Potential and flux distribution deal with current distribution on various electrode shapes as determined by solution of LaPlace's equation for ionic conduction as modified by potential boundary conditions imposed by kinetics and mass transport. The combination of these fundamental components determine the mass and energy balance and scaling laws for cells.

The applied aspects of cell and plant design involve a larger degree of art than do the fundamental aspects. In general, the design of electrochemical cells is limited by available materials of construction, to be illustrated further on by a description of an aluminum reduction cell. Optimization of a cell and plant design is always economic in the last analysis. Quantitative formulation of the fundamental aspects with materials and design considerations provide the basis for economic optimizations. Application of mathematical modeling of cell systems will provide guidance for defining the essential problems in the research and development phase. Selection of required process control methods is aided by quantitative understanding of process dynamics.

MacMullin[2] presented an outline for electrochemical process development, shown on Table 2, that is also applicable to lunar processes. In step 1 for the case at hand, NASA is the overall program manager and defines through it's procedures the objectives of the lunar mission and thus the envelope within which an electrochemical metal producing and oxygen producing plant must operate. NASA assigns qualified personnel in step 2 through it's contacting procedures. Steps 3 through 14 are carried out by the contractor with review by NASA at designated milestones. The contractor must have access to documentation of prior work sponsored by NASA and have

communication with others who are conducting laboratory studies on electrochemical processing of lunar materials.

It is not necessary to describe in detail each of the steps 3 through 14 in Table 2, but it is important to emphasize that such a design procedure should be initiated at an early stage in the program of lunar electrochemical processing. The reason is that this scheme identifies key problem areas not necessarily apparent when working up from the laboratory scale one small incremental step at a time. Sensitivity analyses in the technical and economic models will aid in prioritizing the most fundamental information needed. Existing process analogies such as manufacture of aluminum can be very useful for preliminary design of lunar fused salt processes.

Table 2

OUTLINE FOR ELECTROCHEMICAL DEVELOPMENT[7]

1. Ascertain the objectives of management
2. Assign qualified personnel and/or consultants.
3. Make a search of the literature, including patents.
4. Determine what fundamental information is lacking.
5. Estimate the extent to which analogies can be made as a first approach to design.
6. Draw up a tentative process flow sheet for full-scale plant, including feed preparation, electrolysis, recovery of products, and power supply. This frequently narrows down the conditions under which electroysis is to be carried out.
7. Make a preliminary economic evaluation of full-scale plant, based on what is known or can reasonably be guessed. This investigation involves the following:
   (A) Preliminary cell design and cost versus cell size.
   (B) Circuit design and overall circuit cost versus cell size.
   (C) Total capital cost, manufacturing cost, and return on investment, on conservative basis.

   IF THE EVALUATION JUSTIFIES FURTHER EFFORT, ADDITIONAL STEPS ARE TAKEN AS FOLLOWS:

8. Secure the missing or doubtful fundamental data in the laboratory.
9. Scale down the preliminary commercial cell to an experimental size and provide for varying the parameters and materials of construction.
10. Test the cell, modify as required, and record all meaningful data.
11. Interpret results and make complete material, voltage, and energy balances. IF THE RESULTS STILL MAKE SENSE, PROCEED TO:
12. Extract the significant design factors for scale-up.
13. Reassess the original "commercial" cell and modify as required.
14. Scale down to the next experimental size, which will be also a scale-up of the last model tested.

    REPEAT UNTIL OBJECTIVE IS REACHED (OR HAS TO BE ABANDONED).

Steps 9 and 14 warrant some elaboration because of an important concept advocated by MacMullin, "scale-down by dissection." Generally, for economic reasons, electrolytic cells are operated close to their mass transport limiting current densities. Natural convection of electrolyte, driven by density differences caused by concentration changes or by gas bubble evolution, is often the critical factor. In such a case the critical dimension, for example, electrode height in a copper refining cell, is preserved and the two horizontal dimensions are scaled down.

Design of Lunar Electrochemical Processes

Conditions on the lunar surface, different from Earth, that affect electrochemical cell and plant design are listed in Table 3. The 1/6-Earth gravity would decrease natural convection and limiting mass transfer rates at electrodes and thus could require larger cells than on Earth. The high vacuum would require sealed gas producing cells and plant or operation in a building pressurized with an artificial atmosphere. A solar energy source of heat and electricity, the space radiation heat sink, and the long day/night cycle cause special problems. Either the electrochemical cells are operated intermittently on a 28-Earth-day cycle or large-scale energy storage is used. The alternates of nuclear energy or energy beamed from Earth as discussed in this symposium[8] could provide power for continuous operation. The space radiation heat sink favors higher temperature processes for minimum radiator area, but would require mechanism for lunar day/night constant cell temperature control. Finally, the economics of materials, energy, and labor would be vastly different on the Moon, requiring novel approaches to cell and plant design and, most importantly, integration into the overall lunar enterprise. Optimization of the electrochemical plant will be strongly linked to economic optimization of the whole enterprise.

Table 3

CONDITIONS ON MOON DIFFERENT FROM EARTH AFFECTING ELECTROCHEMICAL CELL AND PLANT DESIGN

1/6 Earth Gravity
High Vacuum
Solar Energy Source - Heat, Electricity (or alternates of nuclear or beam from Earth)
Space Radiation Heat Sink
Lunar Day = 28 Earth Days
Different Economics - Materials, Energy, Labor
Materials - Earth Supply vs Lunar Source (water, hydrogen, and carbon are scarce)
Energy -Intermittent Solar vs Nuclear or Beamed
Labor - Mechanization vs Human Labor

Table 4

CONTINUOUS LUNAR ROCK ELECTROLYSIS CELL - REQUIREMENTS

Insoluble Long-Life Lining
Inert Anode
Inert Cathode
Electrically Conducting Path to Cathode
Operating Temp. above Melting Point of Alloy Product
Operating Temp. High Enough to Decrease melt Viscosity
Thermal Insulation
Methods of Startup and Shutdown
Methods of Feeding Reactants and Removing Products Cost Effectiveness

Gravity is an important force in the design of terrestrial electrochemical processes. Copper refining cells, mentioned in one of the papers in this symposium,[9] are operated near their mass transport limiting current density. This limiting current density is determined by natural convection established by concentration density differences near the vertical anode and cathode surfaces. In chlor-alkali cells the disengagement of H_2 and Cl_2 gas bubbles at the electrodes and the gas buoyancy pumped electrolyte circulation are affected by gravity. The Hall-Heroult aluminum reduction cell depends for it's operation on a stable, gravity-dependent, interface between the horizontal molten aluminum cathode on the bottom of the cell and the electrolyte above it. Much effort has been expended to maintain a stable interface as reduction cells have become larger, but the cells continue to operate on the verge of instability. Terrestrial Hall-Heroult cells would operate with extreme difficulty on the 1/6-Earth-gravity
lunar surface.

To obtain a quantitative feel for the effect of 1/6-Earth-gravity on an electrochemical process, an estimate is made on the size of a copper refining cell with natural convection circulation. The mass transfer coefficient for this system is correlated by[10]

$$Sh = 0.67\ (Gr\ Sc)^{1/4} \qquad (1)$$

in which

- Sh = Sherwood number, kL/D
- Gr = Grashof number, $gL^3 \Delta\rho/\rho\nu^2$
- Sc = Schmidt number, ν/D
- k = mass transfer coefficient $cm \bullet s^{-1}$
- L = electrode height, cm
- D = diffusion coefficient, $cm^2 \bullet s^{-1}$
- g = acceleration of gravity, $cm \bullet s^{-2}$
- ρ = density of electrolyte, $g \bullet cm^{-3}$
- $\Delta\rho$ = difference in density of electrolyte between bulk and close to electrode
- ν = kinematic viscosity, $cm^2 \bullet s^{-1}$

For the same electrode height and electrolyte properties, 1/6 gravity decreases the mass transfer coefficient to 64% of the terrestrial value so that 57% more electrode area would be required.

Two aqueous electrochemical systems have been highly engineered to operate in space vacuum and microgravity on space vehicles; the Apollo fuel cell system and a water electrolysis system.[11] Both systems use capillary forces in electrodes and membranes to control the aqueous phases. Design and operation of aqueous electrolytic process plants appears to be well within the state-of-the-art. Larger scale aqueous electrolytic processes may require heat pumps, though, for efficient heat rejection through space radiators.[2]

Fused magma electrolytic processes appear to offer certain advantages in metals and oxygen production over aqueous processes and NASA has supported preliminary investigations in this area.[(1) (3-5)] Fewer physical and chemical pretreatment steps are apparently required and the processes would operate at temperatures more optimum for heat rejection. On the other hand, finding or developing compatible materials of construction and operation of fused-magma metal winning cells is beyond the state-of-the-art and will present a real engineering challenge. The remainder of this paper is devoted to preliminary considerations about scaling up fused-magma electrolytic cells.

In conformance to MacMullin,[7] a process analogy, the terrestrial Hall-Heroult aluminum reduction cell may be used as a first approach to design. A liquid metal cathode greatly simplifies materials handling compared to removing and separating metal dendrites produced at a cathode. The Hall-

Heroult technology has been refined over the past one-hundred years and, in spite of hundreds of millions of dollars spent on development of alternate processes by the industry, it has not been displaced.

The essentials of a Hall-Heroult cell are shown on the schematic cross section in *Figure 1*. A carbon cathode lining holds the molten aluminum cathode and the molten cryolyte electrolyte (bath). Consumable carbon anodes project into the bath from above. Electric current passes down through the anodes, bath, aluminum cathode, carbon lining, and out steel collector bars. Alumina powder dissolved in the bath is electrolytically decomposed to give oxygen which reacts with the anodes to give carbon dioxide and aluminum which is deposited into the metal pad. The overall reaction is

$$Al_2O_3 + \frac{3}{2}\,C \xrightarrow[o]{6F} 2\,Al + \frac{3}{2}\,CO_2 \qquad (2)$$

in which six Faradays of electricity are used per two gram atomic weights of aluminum produced.

The design of the aluminum reduction cell has been dictated by available materials of construction. To date no completely satisfactory nonconsumable anode that will liberate oxygen instead of CO_2 has been developed. This fact has dictated the vertical entering consumable anodes which are adjusted downward as consumed to maintain the desired anode-cathode distance. Very few materials that are electrical conductors will stand up to the combined corrosive effects of molten cryolite and aluminum; even the carbon linings have a limited life.

Some requirements for a continuous lunar magma electrolysis cell for producing metals and oxygen are presented in Table 4. With the exception of added necessity for an inert anode, the requirements are essentially the same as for terrestrial aluminum electrolysis. It may be added that the aluminum industry has done considerable R & D on inert anodes, but has not quite achieved commercial success.

A preliminary example lunar magma electrolysis cell based on the Hall-Heroult design is shown in *Figure 2*. A discussion of it's utility follows. The example illustrates some of the considerations in scaling up a specific process.

The most important possible electrochemical reactions in a lunar molten magma cell are shown in Table 5. Thermodynamic reversible potentials at an example 1900 K (1627°C) calculated from the oxide standard free energies of formation[13] are also shown. The relatively large potential difference between the iron and silicon potentials indicates that iron could be selectively deposited from a basalt as has been found experimentally on a laboratory scale.[3,4] The smaller potential difference between silicon, titanium, magnesium, and aluminum indicate that it will be difficult to avoid codeposition of these metals as was found on a laboratory scale.[5]

Some physical properties of metal and bath important to the design of a magma electrolysis cell are compared to those in the Hall-Heroult cell in Table 6. For iron from basalt magma the metal will sink to the bottom as in the Hall-Heroult cell. For silicon and aluminum from anorthite the alloy will float to the top and the *Figure 2* cell has to be modified. The viscosities of both magmas are much higher than that of cryolite in the Hall-Heroult bath and gas lift circulation rates would be much smaller, particularly on the 1/6-gravity lunar surface. Ionic conductivities of the magmas are considerably smaller so that anode-cathode distance must be considerably smaller than the 5 cm in the Hall-Heroult process to achieve reasonable voltage efficiency. The Hall-Heroult processes after

Table 5

POSSIBLE ELECTROCHEMICAL REACTIONS IN MOLTEN MAGMA CELL

TEMPERATURE 1900 °K (1627 °C)

								E° (V)
FeO	(c)	$\xrightarrow{2e^-}$	Fe	(ℓ)	+	$1/2\ O_2$		0.761
SiO_2	(c)	$\xrightarrow{4e^-}$	Si		+	O_2		1.479
TiO_2	(c)	$\xrightarrow{4e^-}$	Ti	(c)	+	O_2		1.557
MgO	(c)	$\xrightarrow{2e^-}$	Mg	(ℓ)	+	$1/2\ O_2$		1.767
αAl_2O_3	(c)	$\xrightarrow{6e^-}$	$2Al$	(ℓ)	+	$3/2\ O_2$		1.845
CaO	(c)	$\xrightarrow{2e^-}$	Ca		+	$1/2\ O_2$		2.191

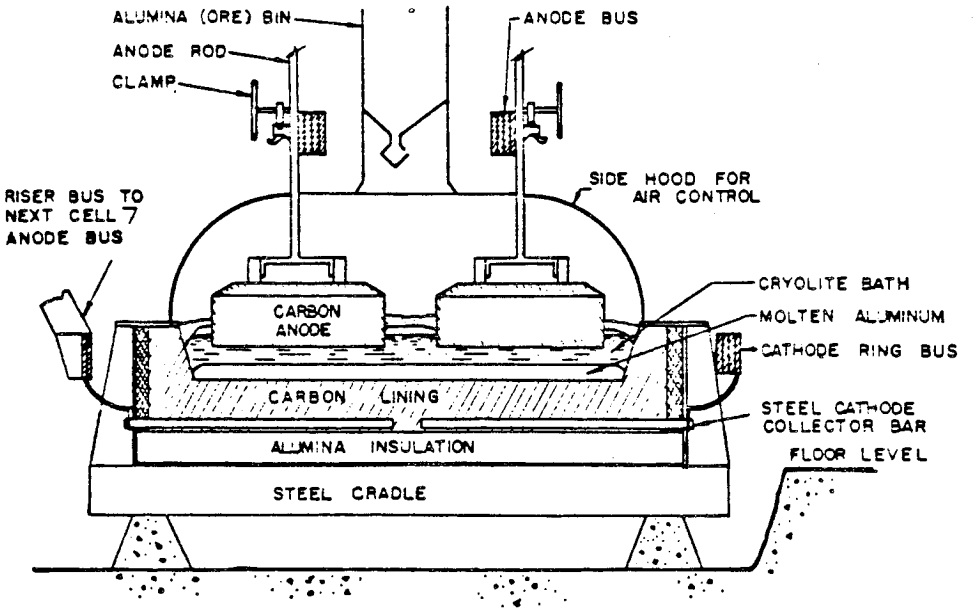

FIG. 1 SCHEMATIC CROSS SECTION OF A HALL-HEROULT ALUMINUM REDUCTION CELL (Ref. 12)

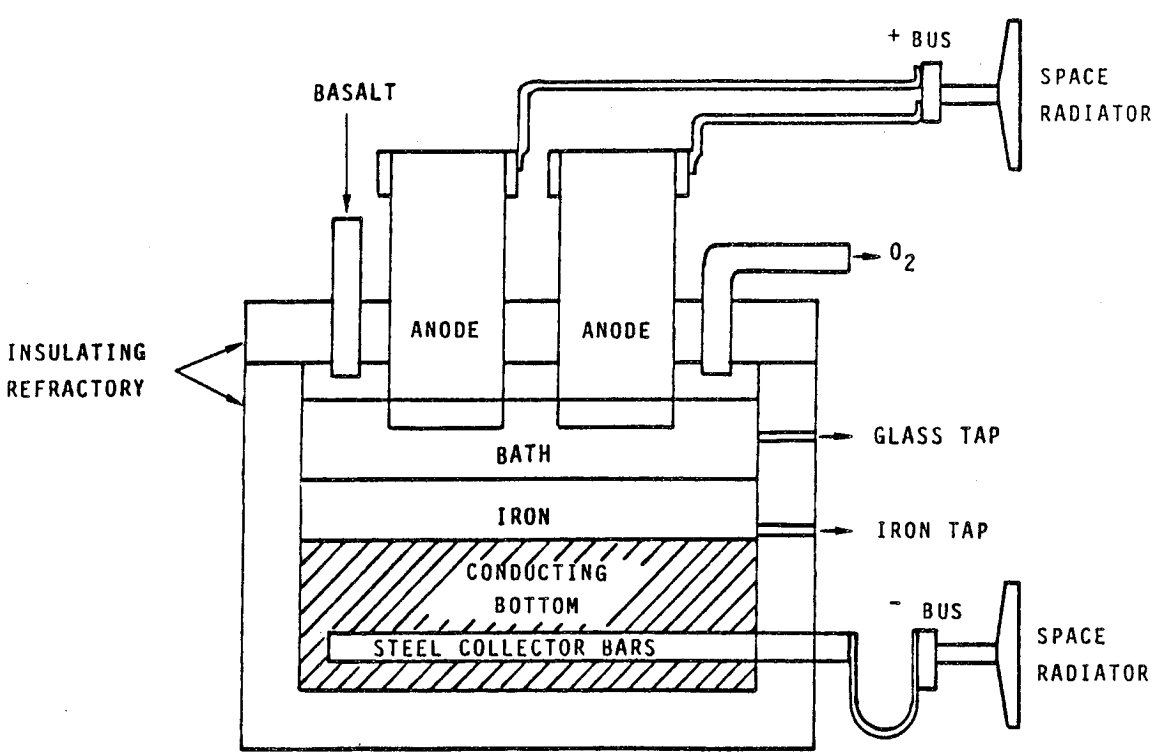

FIG. 2 SCHEMATIC BASALT ELECTROLYSIS CELL BASED ON HALL-HEROULT CELL DESIGN.

one-hundred years of development has an energy efficiency of 40 to 50%. It seems unlikely that a magma electrolysis process with higher temperature, higher-viscosity, and lower conductivity operating at 1/6 gravity would have a higher energy efficiency than 40%.

Table 6
SOME PHYSICAL PROPERTIES OF MAGMA METALS AND BATH COMPARED TO THE HALL-HEROULT PROCESS

	Aluminum Hall-Heroult Process[14]	Iron from Basalt	Si and Al from beneficiated anthorite
Temp °C	950	1600	1400
Bath density g/cm^3	2.2	*2.8-3.7 (15)	*-3 (15)
Metal density g/cm^3	2.3	-7 (16)	-2 (16)
Bath viscosity poise	0.03	-2.5 (15)	-200 (15)
Bath conductivity S/cm	2	**<0.5 (3)	**<0.5 (3)
Energy Efficiency, %	40-50	<40	<40

Table 7 lists some melting points of potential cell materials for a preliminary screening. Iron melts at 1535°C, which sets a lower limit for a liquid cathode basalt electrolysis cell. An operating temperature above 1535°C decreases the basalt viscosity. Graphite might first appear to be a suitable cathode material in the *Figure* 2 cell, but it reacts with iron to form a eutectic at 4.3 wt% carbon with a melting point of 1130°C.[17] This reaction would consume the cathode and give an unsatisfactory alloy. Silicon carbide was used apparently satisfactorily by Kesterke[1] and may be considered a candidate material. The thickness of the bottom must be sufficient to obtain a temperature at the steel collector bars below their melting point. Space radiators will be required for the cathode and anode to obtain the appropriate heat fluxes out of the cell. Anode materials may be the most difficult problem area. Platinum has been used with mixed low and high corrosion results in lunar magma electrolysis.[(3,5)] If the corrosion mechanism could be identified and eliminated, platinum anodes might be considered. Other potential electrodes are tin oxide and nickel ferrite which have been tested for aluminum electrolysis. The anode materials listed in Table 7 would set an upper limit of cell operating temperature. Kesterke[1] found boron nitride an acceptable material for the cell lining at least for short runs. Fused alumina, magnesia, or lunar spinels[3] might be considered for cell linings.

Table 7
MELTING POINTS OF SOME POTENTIAL CELL MATERIALS

COMPONENTS	TEMP (°C) Ref. 16 (except as noted)
Bath and Metal	-1200 (15)
Basalt	
Iron	1535
Silicon	1410
Aluminum	660
Cathodes	
Graphite	-3652
SiC	-2700
Anodes	
Platinum	1772
SnO_2	1630
Ni ferrite	-1600 (18)
Cell	
Boron nitride	-3000 subl.
Al_2O_3	2040
MgO	2825

An alternate cell configuration which might be used for the fused anorthite electrolysis is shown in *Figure 3*. The aluminum silicon alloy floats up to the top of the bath. Vertical parallel, slab anodes and cathodes allow better bath convection by gas bubble buoyancy. Only two of many electrode pairs, as would be used in aluminum electrolysis[19] if a suitable inert anode were available, are shown. Oxygen bubbles would penetrate through the alloy to escape and be collected. Lunar rock chunk feed would also have to penetrate the alloy layer from above. The possible lower temperature of operation of the anorthite electrolysis system could be less corrosive on cell material.

In the early phases of manufacturing on the Moon, solar cells could be the only power source, and batch electrolysis may be the only viable alternative. A concept to produce iron from iron-rich regolith is shown in *Figure 4*. The regolith is put in a suitable vessel with lid. A mushroom-shaped iron starter cathode and current lead comes in from the bottom and an anode projects in from the top through the lid. A refractory bottom prevents the molten iron cathode from melting down through the regolith. At startup of the cycle, the in-place regolith may be melted with a solar concentrator before the lid and anode are put in place. Additional regolith is then dumped into the cell after electrolysis is started. The top of the mushroom cathode grows by deposition from the molten bath between it and the anode. The regolith serves as the source of bath material and as thermal insulation. The anode is moved up as the top of the mushroom cathode grows. Oxygen is collected from a port in the lid. At the end of the 14-Earth-day electrolysis phase the lid and anode are removed and the cell cools by radiation to space. The cell vessel is inverted and the enlarged mushroom cathode, solid glass, and unmelted regolith are removed for further processing. The cell is then reloaded for the next cycle. Graphite and silicon carbide electrothermic furnaces operate on Earth with batch cycles.[21,22]

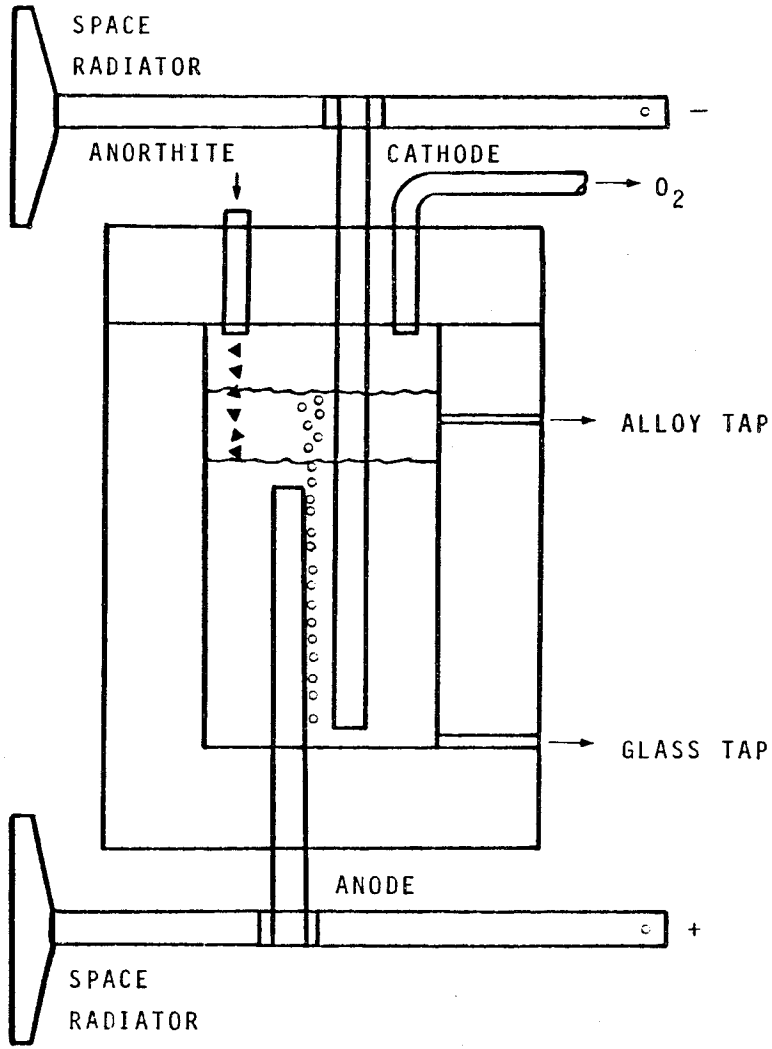

FIG. 3 CONCEPTUAL ANORTHITE ELECTROLYSIS CELL.

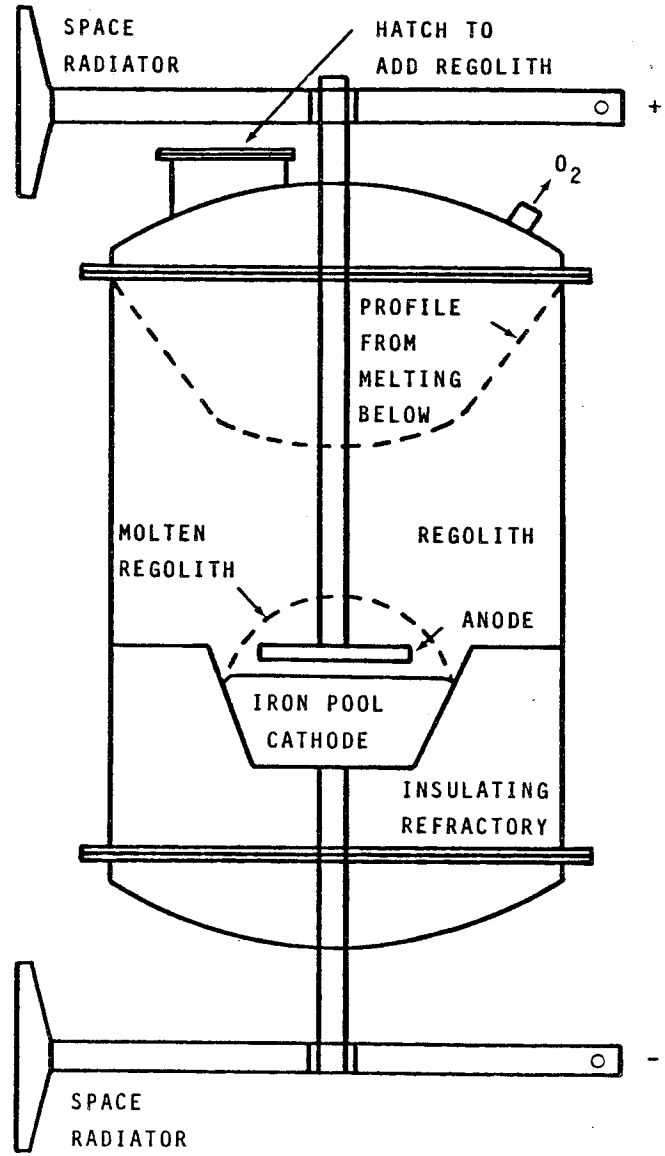

FIG. 4. CONCEPTUAL BATCH REGOLITH ELECTROLYSIS CELL.

Whatever the cell configuration used for metal and oxygen production on the Moon, it is evident that considerable engineering development will be required. The engineering analysis should begin at an early stage and be carried out in collaboration with the small scale laboratory studies to help define the most critical data needed for cell and plant design.

Acknowledgement
Electrochemical Technology Corp. supported the preparation of this paper.

References

[1]D.G. Kesterke, "Electrowinning of Oxygen from Silicate Rocks," RI 7587, U.S. Bureau of Mines, 1971.
[2]R.D. Waldron, T.E. Erstfeld, and D.R. Criswell, "The Role of Chemical Engineering in Space Manufacturing," *Chemical Engineering*, p 80, Feb. 12 (1979).
[3]L.A. Haskin and R.O. Colson, "Physical-Chemical Properties of Silicate Melts and 'Magma' Electrolysis," reported at a State-of-the-Art Workshop, Sponsored by The University of Arizona/NASA Space Engineering Research Center, Tucson, AZ, August 8-9, 1991.
[4]R.D. Waldron and E.D. McCullough, "Lunar ISRU Via Magma Electrolysis, Preliminary Results," in same place as Ref. 3.
[5]R. Keller, et al., "MISM Experiments at EMEC Consultants," in the same place as Ref. 3; "Products from Lunar Anorthite," 9th Biennial SSI/Princeton Conference on Space Manufacturing, May, 1989.
[6]C.W. Tobias, "The Coming Age of Electrochemical Engineering," in *Tutorial Lectures* in Electrochemical Engineering and Technology, R.C. Alkire and T.R. Beck, Eds., AIChE Symposium Series No. 204, volume 77, New York, 1981.
[7]R.B. MacMullin, "The Problem of Scaleup in Electrolytic Processes," Electrochemical Technology, 1, 5 (1963).
[8]J.D.G. Rather, "Earth to Space Power Beaming: A New NASA Technology Initiative," this conference.
[9]C.N. Jones, "An Engineer/Constructors View of Lunar Resource Development," this conference.
[10]J.R. Selman and C.W. Tobias, "Mass-Transfer Measurements by the Limiting Current Technique," in Advances in *Chemical Engineering*, Drew, et al., Eds., Vol. 10, Academic Press, New York, 1978.
[11]J.F. McElroy, "SPE Water Electrolyzers in Support of the Lunar Outpost," this conference.
[12]R.A. Lewis, "Aluminum Electrowinning" in *The Encyclopedia of Electrochemistry*, C.A. Hampel, Ed., Reinhold, New York, 1964.
[13]JANAF Thermochemical Tables, 2nd Ed., Nat. Stand. Ref. Data Ser., Nat. Bur. Stand. (U.S.), No. 37, 1971.
[14]K. Grjotheim, et al., "Aluminum Electrolysis," Aluminum-Verlag, Dusseldorf, 1982.
[15]"Handbook of Lunar Materials," R.J. Williams and J.J. Jadwick, Eds., NASA Reference Publication 1057, 1980.
[16]"CRC Handbook of Chemistry and Physics," 58th, R.C. Weast, Ed., CRC Press, Cleveland, 1977.
[17]"Smithels Metals Reference Book," 6th, E.A. Brandes, Ed., Butterworths, London, 1983.
[18]J.D. Weyand, et al., "Inert Anodes for Aluminum Smelting," Final Report, DOE/CS/40158, Alcoa Laboratories, February, 1986.
[19]T.R. Beck and R.J. Brooks, "Electrolytic Reduction of Alumina," U.S. Patents No. 4,865,701, 1989, and 5,006,209, 1991.
[20]W.G. Krellner and P. Smisko, "Graphite, Electrothermic Production" in Hampel, Ref. 12.
[21]J.C. McMullen, "Silicon Carbide," in Hampel, Ref. 12.