FILE COPY
NO 3

NACA

RESEARCH MEMORANDUM

VISUAL OBSERVATIONS OF THE SHOCK WAVE IN FLIGHT

By George E. Cooper and George A. Rathert, Jr.

Ames Aeronautical Laboratory
Moffett Field, Calif.

THIS DOCUMENT ON LOAN FROM THE FILES OF
NATIONAL ADVISORY COMMITTEE FOR AERONAUTICS
LANGLEY AERONAUTICAL LABORATORY
LANGLEY FIELD, HAMPTON, VIRGINIA

REPRODUCTION OF THIS DOCUMENT IS PROHIBITED.
REQUESTS FOR PUBLICATIONS SHOULD BE ADDRESSED AS FOLLOWS:

NATIONAL ADVISORY COMMITTEE FOR AERONAUTICS
1512 H STREET, N. W.
WASHINGTON 25, D. C.

TECHNICAL
EDITING
WAIVED

NATIONAL ADVISORY COMMITTEE
FOR AERONAUTICS
WASHINGTON
May 24, 1948

NATIONAL ADVISORY COMMITTEE FOR AERONAUTICS

RESEARCH MEMORANDUM

VISUAL OBSERVATIONS OF THE SHOCK WAVE IN FLIGHT

By George E. Cooper and George A. Rathert, Jr.

SUMMARY

This report presents the results of pilot observations and photographs of the compression shock wave on the wing of an airplane in flight. A detailed description of the test conditions necessary and the procedure to be followed in producing the visible shock are presented. The physical phenomenon occurring is discussed, and, although the observations presented have been made on but three airplanes, it is indicated that it should be possible to obtain photographs of shocks on any airplane if the correct test conditions are duplicated. The pilot's observations of the occurrence of an oscillating shock wave and its possible relationship with the airplane buffeting are also presented. It is suggested that future extension of the method to the study of shock waves over other surfaces may prove fruitful.

INTRODUCTION

During high-speed dive tests of a single-engine fighter-type airplane, the pilot noticed a visible indication of the normal shock wave over the wing of the type that was first reported by Major Frederick A. Borsodi of the Army Air Forces. Subsequent attempts to duplicate the conditions necessary to the formation of this visible shock-wave image met with such success that an analysis of the physical phenomenon involved was made and is presented in this report. Certain simple rules were established which must be adhered to in producing these visible shock-wave images at will. The installation of either 16-millimeter or 35-millimeter motion picture cameras in three different airplanes produced numerous photographs of the shock wave on both the wing and the canopy.

The pilot's observations are used freely throughout the

discussion, and several possible applications of the method are suggested which are based on the pilot's opinion of the method's utility as a regular testing technique.

TEST CONDITIONS AND PROCEDURE

Physical Explanation of Image

The conditions necessary to produce visible shock-wave images are basically the same as those required for any shadowgraph image of a pressure discontinuity. A light source of suitable intensity is used to produce parallel light, which is refracted upon passing through a varying density medium before falling upon a screen or viewing surface. A camera may be added for recording purposes but is not essential for viewing purposes. In this particular application of the shadowgraph principle, the sun is used as the light source and the wing surface as the viewing screen. The types of image produced are shown in figure 1. Note that the image of the canopy shock appears in profile directly above the shadow of the canopy itself, while the wing shock is in plan form.

An interpretation of the physical phenomenon involved in the wing image can be made by referring to figure 2. Parallel light from the sun passes through the low-density air ahead of the shock wave and is refracted toward the rear upon entering the high-density region behind the shock wave. As the pressure change is greater near the surface, the amount of refraction is greater there also. Consequently, one would expect a dark band immediately behind the shock-wave wing intersection, followed by a light band. An examination of figures 1 and 2 shows this to be the case. The image of the canopy shock shown at the left of figure 1 has a greater width of dark and light bands than the wing shock, because of the conical shape of the shock wave and its greater distance from the wing which served as the background or viewing surface.

Orientation of Sun and Airplane

Experiments have shown that the clearest shock-wave images are produced when the sun is near its zenith and lying approximately in the plane formed by the lateral and directional axes of the airplane. A drawing showing the proper orientation of the sun with respect to the airplane is presented in figure 3. Visibility of the wing shock wave from the cockpit was about the same looking either into or away from the sun in the cases where the sun was not at its zenith.

Canopy shock waves, of course, are produced only on the down sun wing and require the sun to be near but not at its zenith. The image, in this case, is seen on the inboard portion of the wing where visibility is best from the cockpit.

Considerable difficulty has been experienced in obtaining prominent shock-wave pictures during the winter months (Oct. - Feb.) due to the low angle of the sun at its zenith. Conversely, during the summer months no difficulty was experienced in obtaining strongly visible shock waves and, furthermore, the latitude with respect to the sun-airplane relationship is the greatest. Satisfactory results were obtained during this period with the sun as much as 20° forward of the lateral and directional axis plane as indicated in figure 3.

An account must be taken of the airplane attitude required to obtain the critical Mach number necessary for shock formation. Airplanes which require a relatively steep angle of dive must be dived in some degree toward the sun; whereas jet aircraft attaining critical Mach numbers in level flight may be expected to obtain the best results while the sun is directly overhead as is indicated from a study of figure 3.

Location of Pilot and Camera

Location of the pilot with respect to the shock-wave image on the wing is also of great importance in relation to its visibility, and is probably the outstanding reason why observation of the image has been reported only once before.

It is interesting to note that the pilot was flying the same model of airplane when he first noticed the shock wave as was Major Borsodi when he made his initial observations.

Subsequent flights in other airplanes, where a visible shock wave was produced, indicate that this phenomenon is not confined to a single airplane, however, but has been clearly observed on two other types. Additional corroboration is found in reference 1, where shock waves were observed at the wing-tip tank intersection.

On the initial airplane, the pilot was located almost squarely opposite the wing-chord station near where the shock occurs. If the line of the shock wave were extended on this airplane from one wing to the other, it would pass almost directly through the pilot's seat. Photographs were obtained with cameras located near the pilot's head, approximately 30 inches forward and 12 inches to the

rear. The most distinct pictures were those taken with the camera directly in line with the shock wave.

Background or Viewing Surface

Some experimentation was carried on with background colors. Dark blue, light gray, red, and the polished aluminum surfaces all produced satisfactory results, although the best black and white photographs were obtained with the red surface.

RESULTS AND DISCUSSION

Location

Shock waves have been observed on airplanes with both the conventional and low-drag airfoils, but photographs of the latter only have been obtained so far. Unpublished chordwise pressure-distribution measurements made during tests of a similar airplane at the Langley Laboratory have been added to figure 4 to show that the shock-wave location indicated by the pressure distribution agrees quite well with that photographed in flight. The pressure distribution was measured at the spanwise location of the plot in figure 4, which is somewhat outboard of the visible portion of the shock wave.

Movement

Below the Mach numbers at which severe buffeting occurred, the shock wave was observed to remain steady with Mach number and normal acceleration held constant. With increasing Mach number and constant acceleration, the shock-wave location progressed smoothly rearward, while, with increasing acceleration and constant Mach number, the location progressed forward.

As the airplane was pushed to still higher Mach numbers and the pull-out begun, the shock wave would begin to oscillate fore and aft with an amplitude of 2 to 3 inches. During the oscillation, the general shift in location was observed to remain consistent with changes in Mach number and normal acceleration. In every case observed, the appearance of the oscillation was practically coincident with the incidence of severe buffeting of the airplane. As Mach number was decreased to the point where buffeting ceased, the shock wave would change position, moving forward steadily and decreasing in visibility until it disappeared when the Mach number fell below

the critical for the wing. Photographs illustrating this movement and diminishing visibility are presented in figure 5. The shock-wave position in percent chord, which is also shown in this figure, was measured at a spanwise location of 28 percent of the semispan.

The oscillating shock wave was observed on two different airplanes and, in each case, a definite relationship was felt by the pilot between the frequency of oscillation and of buffeting, although no quantitative measurements were obtained.

Form and Variations Observed

On the first test airplane, the wing shock-wave image took the form of a smooth curve with one or more reflexes, extending from about 18 inches from the wing root to within 24 inches of the wing tip. When oscillating, the entire shock wave appeared to move as a unit, although the outboard section would become relatively indistinct. This airplane had a smooth, painted surface and was exceptionally free from waviness in the wing skin.

With a second airplane, having an unpainted wing and a rougher and more wavy surface, the shock wave appeared broken into several sections rather than the smooth continuous curve mentioned previously. Oscillation of all visible segments took place simultaneously, although, again, the outboard position became indistinct.

Canopy Shock Waves

Photographs were also obtained of the image formed on the wing surface by refraction of the canopy shock waves, one of which is presented in figure 1. This is of particular interest because it produces the shock wave in profile, and clearly shows the form referred to as a lambda shock. Photographs were obtained which showed a definite fore and aft oscillation of this shock wave over the top of the canopy.

Applications

Although these observations have been limited to three airplanes, it is felt that the method could be made applicable to any airplane, provided means of locating the camera overlooking the wing are available at a station almost directly opposite the shock wave. It is true, however, that, in airplanes where the pilot is located either

far forward or far aft of the wing station where the shock occurs, he will be unable to see the shock himself and so will encounter some difficulty in placing the airplane correctly in relation to the sun. Practice in an airplane where he can visually observe the shock wave and the effect of the sun angle and airplane attitude on its visibility should make it possible for any pilot to set up the correct conditions, even though he is unable to observe the shock wave himself.

Perhaps the greatest advantage of this method is its simplicity. Few instruments are required, and very little practice should be required of a competent pilot before he can attain good visible shock waves practically at will.

The method should prove valuable in a further study of the relationship between airplane buffeting and shock-wave oscillation. A further extension of the method is indicated by the canopy shock photograph, which shows the shock wave in profile. By mounting the camera near the wing tip and flying with the sun directly opposite that wing, it should be possible to obtain profile shadowgraph images of the shock either against the side of the fuselage or against a low "fence" mounted at some inboard wing station.

It is possible that future application may include obtaining photographs of the shock waves over other parts of the airplane (e.g., on wing-tip tanks as reported in reference 1).

Possible Alternative Method

In an attempt to obtain a visual indication of the wing shock position by another principle, a system of parallel dark lines was drawn over a white section of the wing. It was thought that viewing these lines through the wing shock wave would, due to the differences in refraction between the air in and out of the shock wave, cause an apparent distortion of the lines at the wing-shock-wave intersection. Photographs obtained when the shock wave was known to be present did not reveal any noticeable distortion of these lines. Further development, however, might show this method, which has the advantage of not requiring direct sunlight, to be usable.

CONCLUSIONS

The information contained in this report shows that visible shock waves may be observed over the wing and from the canopy of certain airplanes, using only the sun as a light source, if a given

set of conditions is strictly adhered to by the pilot. From the discussion and results, the following general conclusions may be drawn:

1. The method will produce satisfactory shock-wave images that may be either viewed or photographed.

2. Establishment of the correct test conditions in flight is relatively simple, requiring a minimum of practice by the pilot.

3. Extension of the method to include a study of the wing shock in profile, the shock over various other surfaces, and further study of the relationship between airplane buffeting and shock-wave oscillation all represent possible future applications.

Ames Aeronautical Laboratory,
National Advisory Committee for Aeronautics,
Moffett Field, Calif.

REFERENCE

1. Johnson, Clarence L.: Development of the Lockheed P-80A Jet Fighter Airplane. Jour. Aero. Sci., vol. 14, no. 12, Dec., 1947, pp. 659-679.

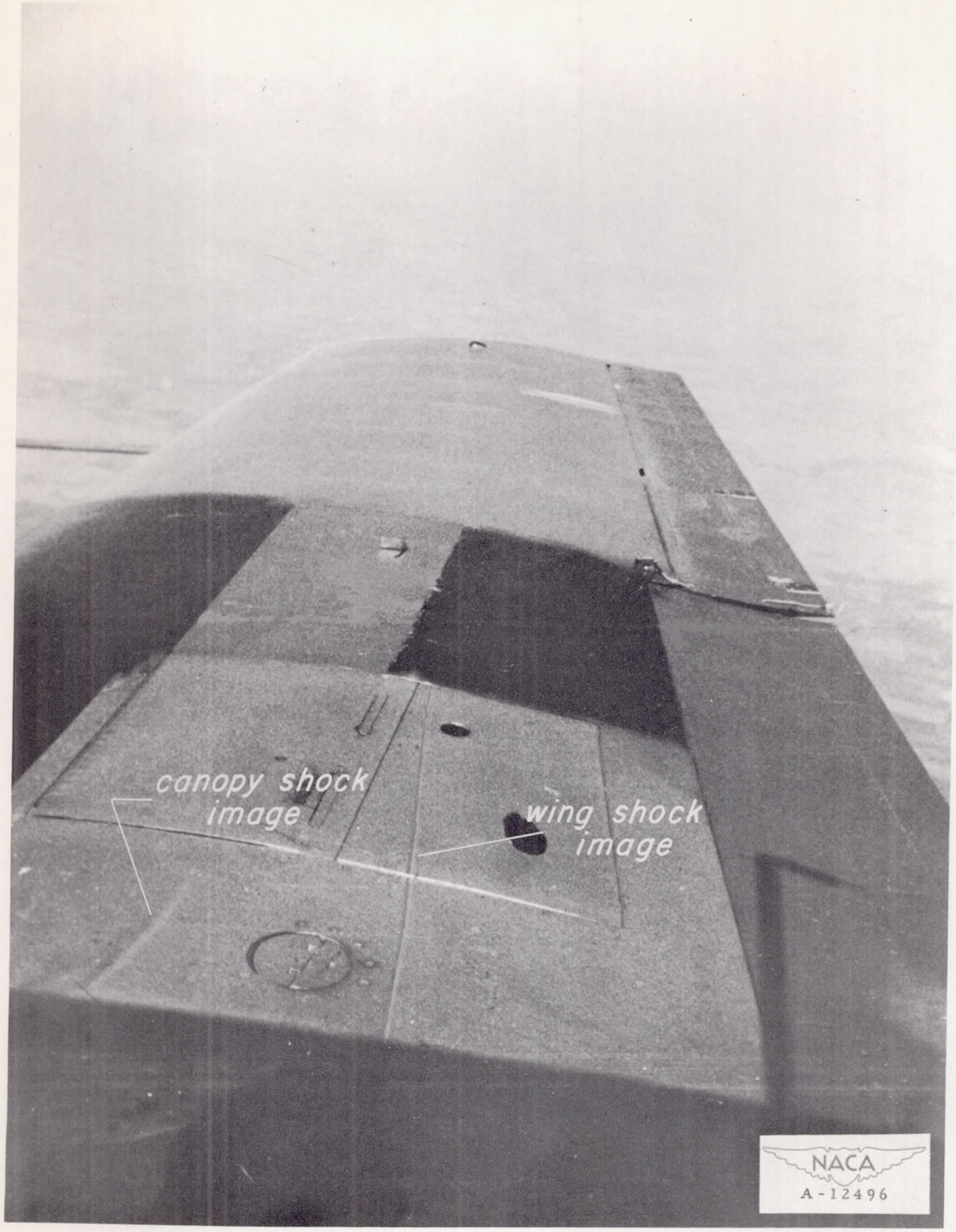

Figure 1.- Examples of shock-wave images photographed in flight.

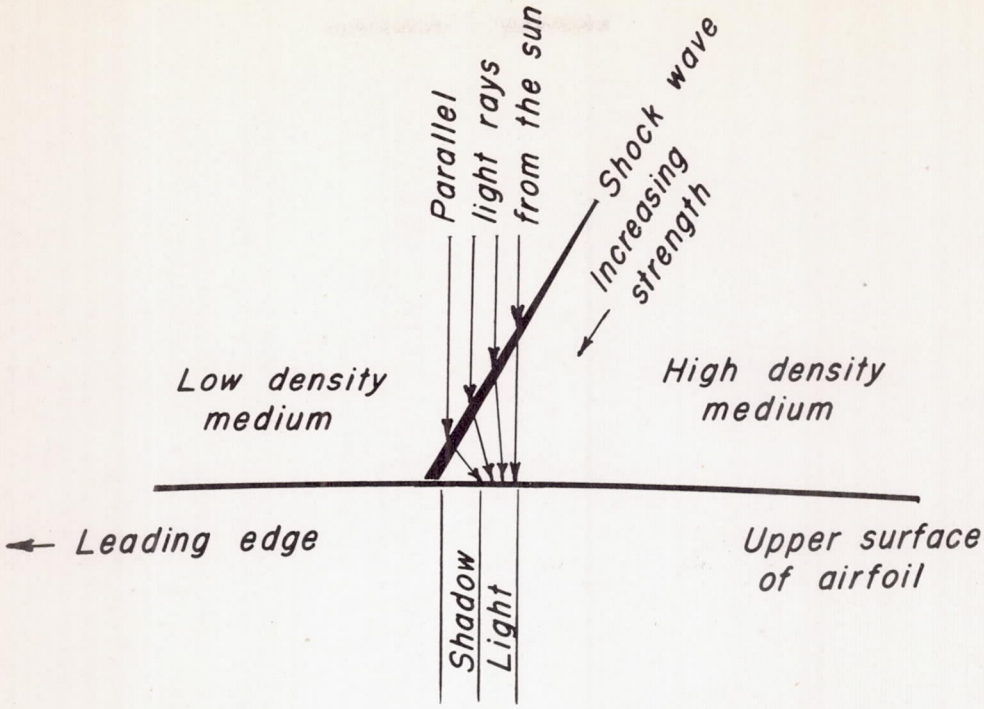

(a) Diagram of chordwise cross-section

(b) Photograph equivalent to planform view of (a)

Figure 2.- Illustration of method of viewing location of base of main compression shock wave on the wing of an airplane in flight utilizing the sun as the light source.

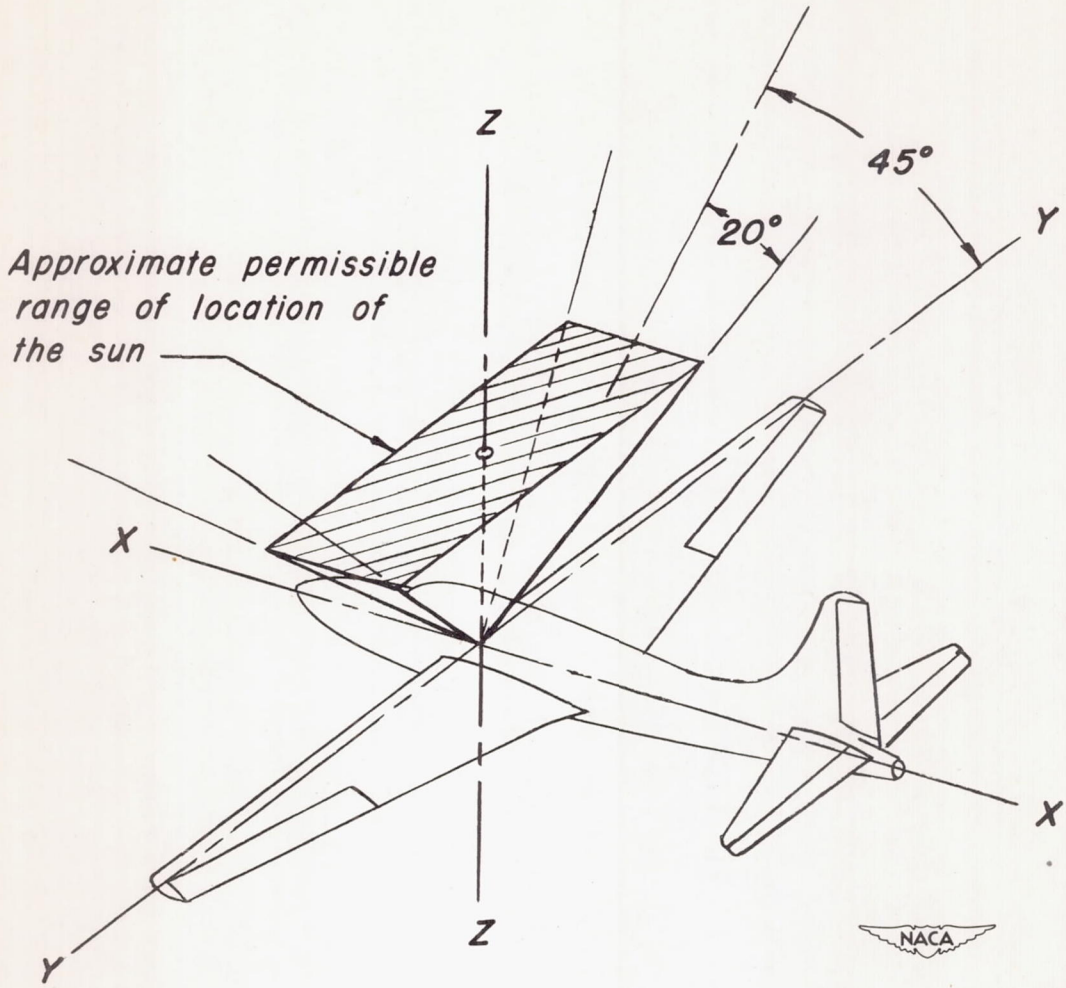

Figure 3.- Proper orientation of the sun with respect to the airplane axes.

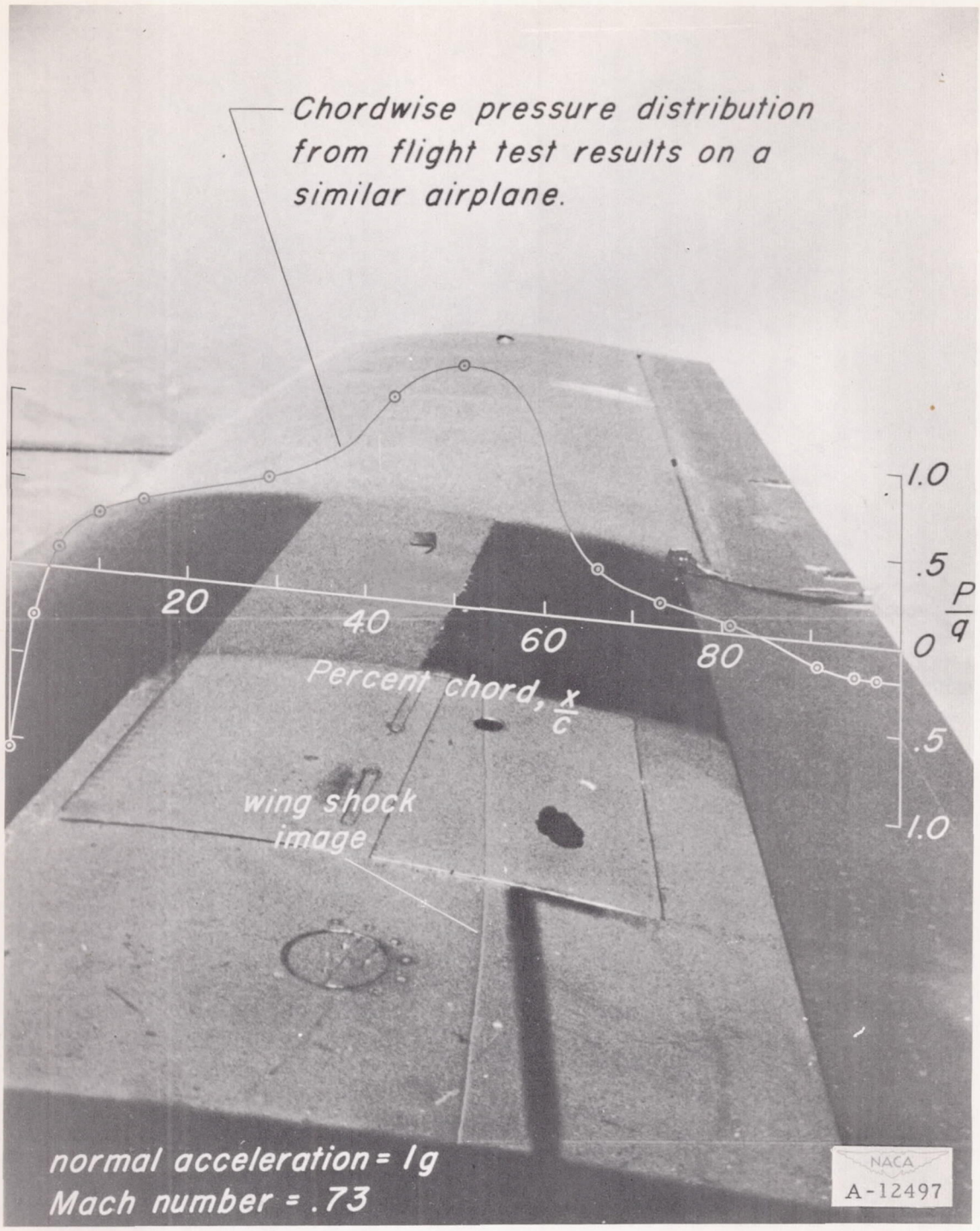

Figure 4.– Comparison of shock-wave image position with pressure distribution measured in flight on a similar airplane.

(a) M = 0.74.

Figure 5.– Photographs of wing shock-wave movement in a dive recovery.

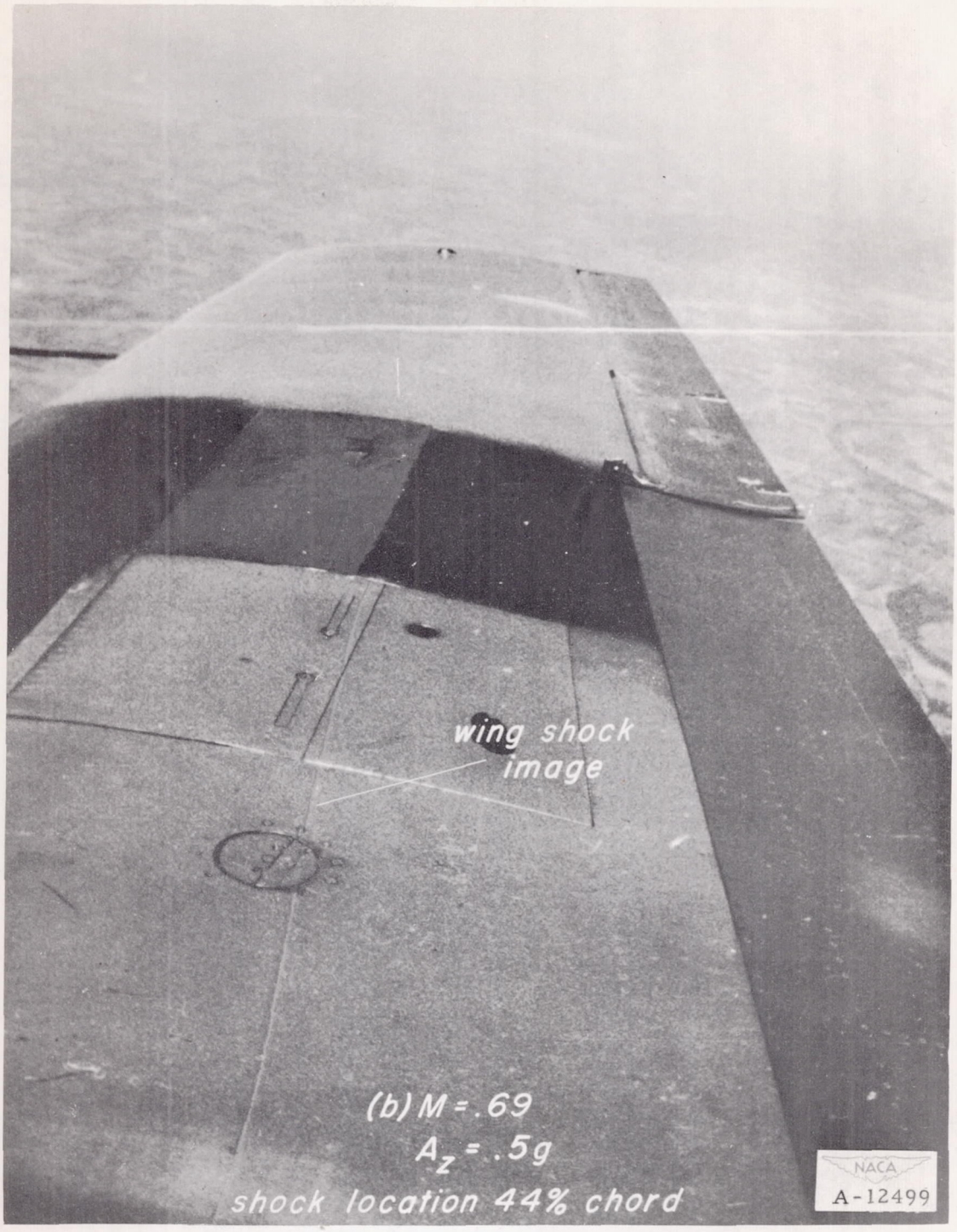

(b) M = 0.69.

Figure 5.– Concluded.