203387
p. 174

NASA Contractor Report CR-191132

HEAT PIPE COOLED HEAT REJECTION SUBSYSTEM MODELLING FOR NUCLEAR ELECTRIC PROPULSION (TASK ORDER NO. 18)

Michael P. Moriarty
Rocketdyne Division
Rockwell International
6633 Canoga Avenue
Post Office Box 7922
Canoga Park, CA 91309-7922

November 16, 1993

PREPARED FOR
LEWIS RESEARCH CENTER
UNDER CONTRACT NAS3 25808

National Aeronautics and Space Administration

(NASA-CR-191132) HEAT PIPE COOLED HEAT REJECTION SUBSYSTEM MODELLING FOR NUCLEAR ELECTRIC PROPULSION Final Report (Rockwell International Corp.) 174 p

N94-24061

Unclas

G3/20 0203387

CONTENTS

		Page
	Summary	1
1.0	Introduction	2
2.0	Technical Approach	3
	2.1 Requirements	3
	2.2 Subsystem Definitions	4
	2.3 Overall Code Design	4
3.0	Equipment Subroutine/Algorithm Development	9
	3.1 Main Driver Routine (HREJEC)	9
	3.2 Heat Sink Heat Exchanger (HRSHEL)	9
	3.3 NaK Piping	13
	3.4 EM Pump	14
	3.5 Expansion Compensator	14
	3.6 Gas/Liquid Heat Pipe Manifold	16
	3.7 Shear Flow Condenser Manifold	19
	3.8 Gas Ducting	21
	3.9 Heat Pipe Radiator	21
4.0	SUPPORTING SUBROUTINE/ALGORITHM DEVELOPMENT	
	4.1 Orbit/Environment	23
	4.2 Thermal Properties	26
	4.3 Armor Thickness Estimates	26
	4.4 Sink Temperature Estimates	28
	4.5 Statistical Equation Solution Routines	28
5.0	Conclusions/Recommendations	29
	References	30
	Appendix A: Operating Instructions for the HREJEC Code	A-1
	Appendix B: Sample Cases	B-1
	Appendix C: Code Listing	C-1

PRECEDING PAGE BLANK NOT FILMED

FIGURES

		Page
1.	Direct Gas Cooled Brayton Radiator	5
2.	Liquid Loop Cooled Brayton Radiator	5
3.	Rankine Cycle Shear Flow Condenser	6
4.	Overall Code Logic Diagram	7
5.	Shell and Tube Heat Exchanger Geometry and Flow Paths	10
6.	Shell-Side Heat Transfer Coefficient Correlation Comparison	12
7.	Typical NaK Loop Plumbing for Power System Heat Rejection	15
8.	Volume Accumulator Unit Design Concept Details	15
9.	Gas/Liquid Heat Pipe, Fin and Manifold Configuration	17
10.	Manifold Shell-Side Heat Transfer and Pressure Drop	18
11.	Shear Controlled Flow Condenser and Heat Pipe Radiator Flow Schematic	20

TABLES

Page

1.0 Heat Rejection Subsystem Ground Rules and Requirements .. 3

2.0 Heat Pipe Working Fluid Temperature Ranges and Containment Materials Recommended 3

3.0 Cratering Coefficient Values and Damage Thickness Factors for Selected Materials 27

Foreword

Systems engineering efforts initiated by NASA's Lewis Research Center (LeRC) in FY92 under RTOP 593-72. for Nuclear Electric Propulsion (NEP), have enabled the development of detailed mathematical (computer) models to predict NEP subsystem performance and mass. The computer models are intended to help provide greater depth to NEP subsystem (and system) modeling, required for more accurately verifying performance projections and assessing the impact of specific technology developments.

The following **subsystem** models have been developed:

1) liquid-metal-cooled pin-type, and
2) gas-cooled NERVA (Nuclear Engine for Rocket Vehicle Applications) - derived for **reactor/shield**;
3) Potassium-Rankine, and
4) Brayton for **power conversion**;
5) **heat rejection general model** (includes direct Brayton, pumped loop Brayton, and shear flow condenser (Potassium-Rankine);
6) **power management and distribution (PMAD) general model**; and
7) ion electric engine, and
8) magnetoplasmadynamic thruster for the **electric propulsion subsystem**.

These subsystem models for NEP were authored by the Oak Ridge National Laboratory (ORNL) for the reactor (NASA CR-191133), by the Rocketdyne Division of Rockwell International for the Potassium Rankine (NASA CR-191134) and Brayton (NASA CR-191135) power conversion, heat rejection (NASA CR-191132), and power management and distribution (NASA CR-191136), and by Sverdrup Technology for thr thrusters (NASA CR-191137).

At the time of this writing, these eight VAX/FORTRAN source and executable codes are resident on one of LeRC's Scientific VAX computers.

SUMMARY

NASA LeRC is currently developing a FORTRAN based computer model of a complete nuclear electric propulsion (NEP) vehicle that can be used for piloted and cargo missions to the Moon or Mars. Proposed designs feature either a Brayton or a K-Rankine power conversion cycle to drive a turbine coupled with rotary alternators. Both ion and MPD thrusters will be considered in the model. In support of the NEP model, Rocketdyne is developing power conversion, heat rejection, and power management and distribution (PMAD) subroutines. The subroutines will be incorporated into the NEP vehicle model which will be written by NASA LeRC. The purpose of this report is to document the heat pipe cooled heat rejection subsystem model and its supporting subroutines.

The heat pipe cooled heat rejection subsystem model is designed to provide estimates of the mass and performance of the equipment used to reject heat from Brayton and Rankine cycle power conversion systems. The subroutine models the ductwork and heat pipe cooled manifold for a gas cooled Brayton; the heat sink heat exchanger, liquid loop piping, expansion compensator, pump and manifold for a liquid loop cooled Brayton; and a shear flow condenser for a K-Rankine system. In each case, the final heat rejection is made by way of a heat pipe radiator. The radiator is sized to reject the amount of heat necessary.

The calculations proceed from first principles and normally will require that a relatively extensive amount of information be made available to the code. For normal use, a complete description of the component geometry must be specified. However, for preliminary design purposes, the code provides an option that will generate a workable design for the heat rejection system that can be used as the basis for further optimization.

The code computes the performance of each equipment item in the flow path. Performance for specific elements such as the heat exchanger, piping and manifolds is usually expressed as a pressure and a temperature drop. The pressure drops are summed to size the pumps, while the temperature drops are used to determine the mean effective temperature of the radiator which is then sized to reject the amount of heat required to operate the cycle at the specified conditions. Code output is in the form of labeled variable values and the output for each option includes a detailed mass summary of the equipment items in the selected flow path.

A detailed discussion of the derivation of the algorithms incorporated in the various subroutines used forms the major portion of the report. The model documentation includes as an appendix a detailed users manual which provides definition of the input variables required, subroutine usage instructions, and applications examples to illustrate the output resulting from invoking the different code options.

1.0 INTRODUCTION

The objective of this task was to characterize potential heat pipe based radiator subsystems for use in megawatt sized nuclear electrical propulsion systems. The approach to developing this characterization was to develop a mass/performance estimating computational methodology that proceeds from first principles to provide valid estimates of the performance and mass of candidate heat pipe based radiators and the auxiliary devices required to use them in both Brayton and Rankine system designs. Heat rejection subsystem characteristics of interest are radiator size (area, length, width, heat pipe lengths, heat exchanger dimensions) and mass. It was required that these characteristics be developed for both a potassium Rankine cycle with a constant temperature condensation process, as well as for a Brayton cycle with a varying temperature cooling process. Input variables to be considered in the characterization include temperature, working fluids, cycle type, radiator geometry and materials of construction.

It was deemed desirable to provide as many default values for variables as possible, in order to minimize the amount of effort required to use the program. This desire conflicts with the necessity of developing algorithms with sufficient detail to permit rational optimization when the code is used as part of an overall systems model. A compromise solution was developed in the form of an option to the basic code that determines a radiator design on a relatively simplified and non-optimized basis. The inputs developed as a result of running the optional portion of the code are intended to provide sufficient detail to the user who can then construct an operating model of the system which can then be optimized by manipulation of this more complete data set.

This report provides documentation of the methodology used in developing the heat rejection subsystem analysis subroutine and includes a discussion of the technical approach developed, the design of the main driver program, and the design and integration of the various equipment algorithms and supporting routines used. A users manual for the code and a complete FORTRAN source code listing are presented as Appendices. Users familiar with the analysis of space based heat rejection systems should be able to use the code with only the information given in the users manual, Appendix A.

2.0 TECHNICAL APPROACH

2.1 Requirements

The heat rejection subsystem will be required to operate over a wide range of temperatures and pressures, and with a variety of working fluids. The ranges of these parameters are shown in Table 1. These requirements are met primarily by supplying materials properties for materials used at the pressures and temperatures of interest. For the heat pipes, sufficient options are provided to cover an even larger range than required.

TABLE 1
HEAT REJECTION SUBSYSTEM
GROUND RULES AND REQUIREMENTS

Input parameter ranges of interest:
- Power Conversion System Outlet Temperatures (k):
  - K-Rankine: 750 - 1250
  - Brayton: 300 - 1000
- Power Conversion Working Fluids:
  - K-Rankine
  - Helium
  - Helium-Xenon Mixtures
- Power Levels: 100-50000 KWt
- Lifetime: 2 - 10 Years

Code options that provide for automated selection of heat pipe working fluids and containment materials will use the Values in Table 2. The user, however, can specify any of the working fluids in Table 2 at any time. The code will run with the selected fluid if its use at the specified temperature is possible. Inappropriate selections will cause the code to stop with the appropriate heat pipe related error message.

TABLE 2
HEAT PIPE WORKING FLUID TEMPERATURE RANGES
AND CONTAINMENT MATERIALS RECOMMENDED

TEMPERATURE RANGE (K)	FLUID USED	CONTAINER MATERIAL
250 - 305	AMMONIA	ALUMINUM
305 - 560	WATER	MONEL (COPPER)
560 - 750	MERCURY	347 STAINLESS
750 - 950	POTASSIUM	NIOBIUM
950 - 1150	SODIUM	NIOBIUM
1150 - 1800	LITHIUM	MOLYBDENUM

2.2 Subsystem Definitions

The code developed for the characterization of potential heat pipe cooled heat rejection subsystems is designed to be applicable to both the Brayton and Rankine cycle power r conversion systems. Brayton systems have been proposed that feature both direct heat extraction from the cycle working fluid and heat extraction by use of a gas/liquid heat exchanger and a liquid loop as shown on the flow diagrams given as Figures 1 and 2. The direct heat extraction cycle uses a gas to heat pipe cooled heat exchanger/manifold to extract the heat directly from the cycle working fluid. In most cases the heat exchanger for this application will be finned on the gas side. In those cases in which a liquid loop is used, a fluid loop is placed between the cycle working fluid and the radiator, primarily to permit the transfer of heat without the use of extensive, high mass ducting. The radiator manifold/heat pipe heat exchanger will usually be unfinned in the liquid loop cooled systems. In general, the larger sized systems will favor the use of an intermediate loop in the heat rejection system. The Flow diagram for the Rankine cycle systems is shown in Figure 3. The Rankine cycle makes use of a shear-flow condenser because other types are not considered practical for use in the absence of a gravity field.

2.3 Overall Code Design

Figure 4 presents an overall logic flow diagram for the Brayton and Rankine cycle heat rejection subsystems. Figure 4 illustrates the steps required to estimate the performance and mass of a subsystem for rejecting heat to space. The steps required to accomplish this objective are:

1. Select the method of heat rejection to be used for the system. Three options will be available. The options are described above and illustrated in Figures 1, 2 and 3.
2. Compute the performance of the gas/liquid heat exchanger if required.
3. Compute the performance of the liquid loop system, if one is used.
4. Size or select the pump if one is used. The code will only provide for the use of a liquid metal (NaK) loop for secondary cooling. For liquid metals, an EM pump is most often specified. The mass and performance of the pump will generally be estimated from semi-empirical curves generated for other purposes.
4. Compute the performance of the heat exchanger/manifold or condenser as needed.
5. Size the heat pipe radiator.

Several of the equipment size performance estimating subroutines are supported by other subroutines which describe the operating environment or describe the thermal property variations with temperature or pressure. The interactions of these routines are

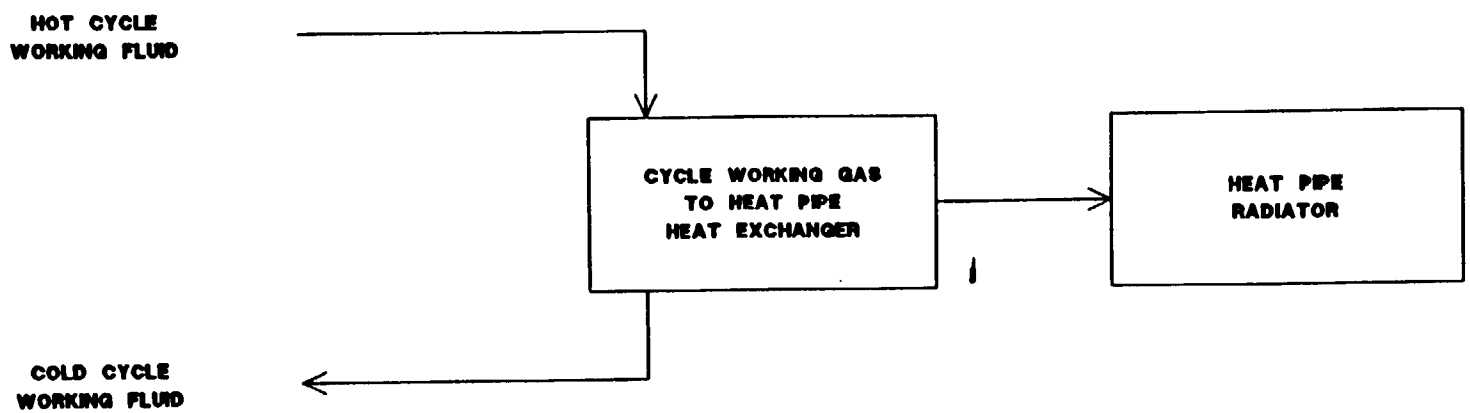

Figure 1: DIRECT GAS COOLED BRAYTON RADIATOR

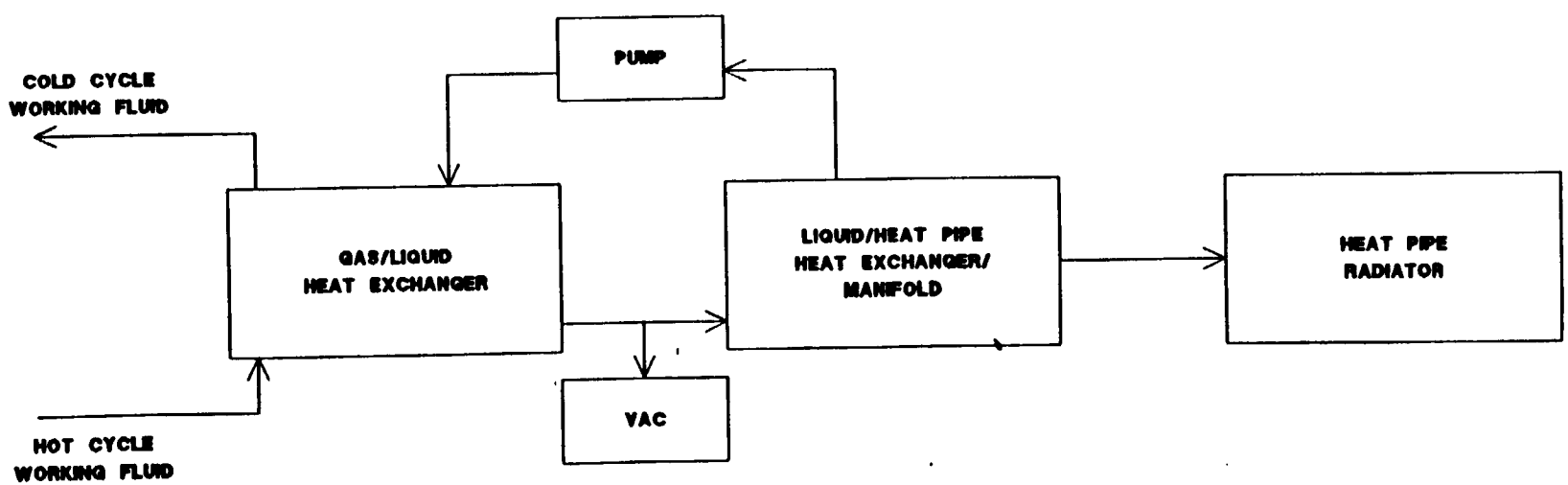

Figure 2: LIQUID LOOP COOLED BRAYTON RADIATOR

FIG1-2.TC

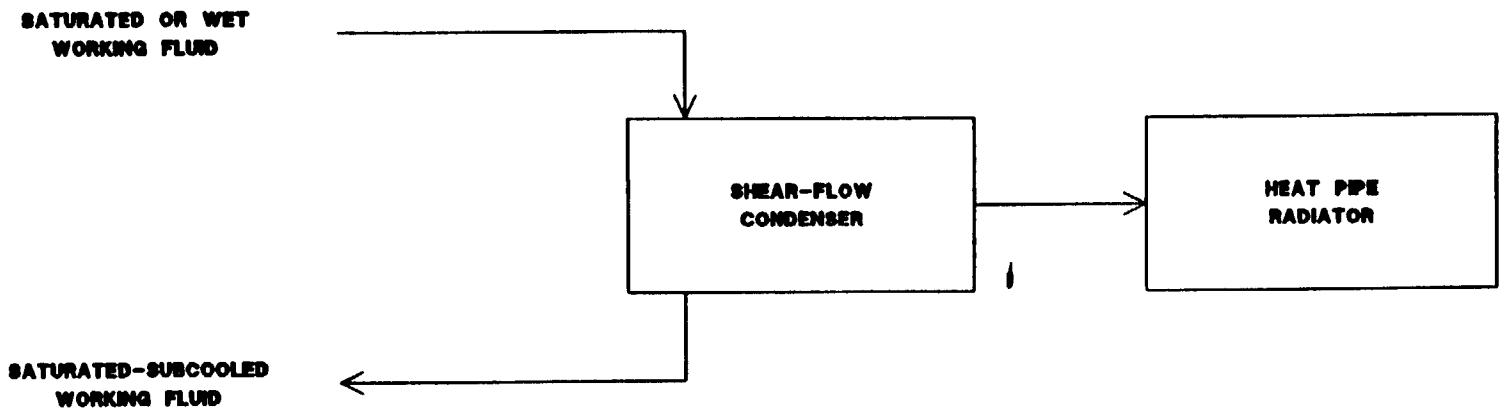

Figure 3: RANKINE CYCLE SHEAR FLOW CONDENSER

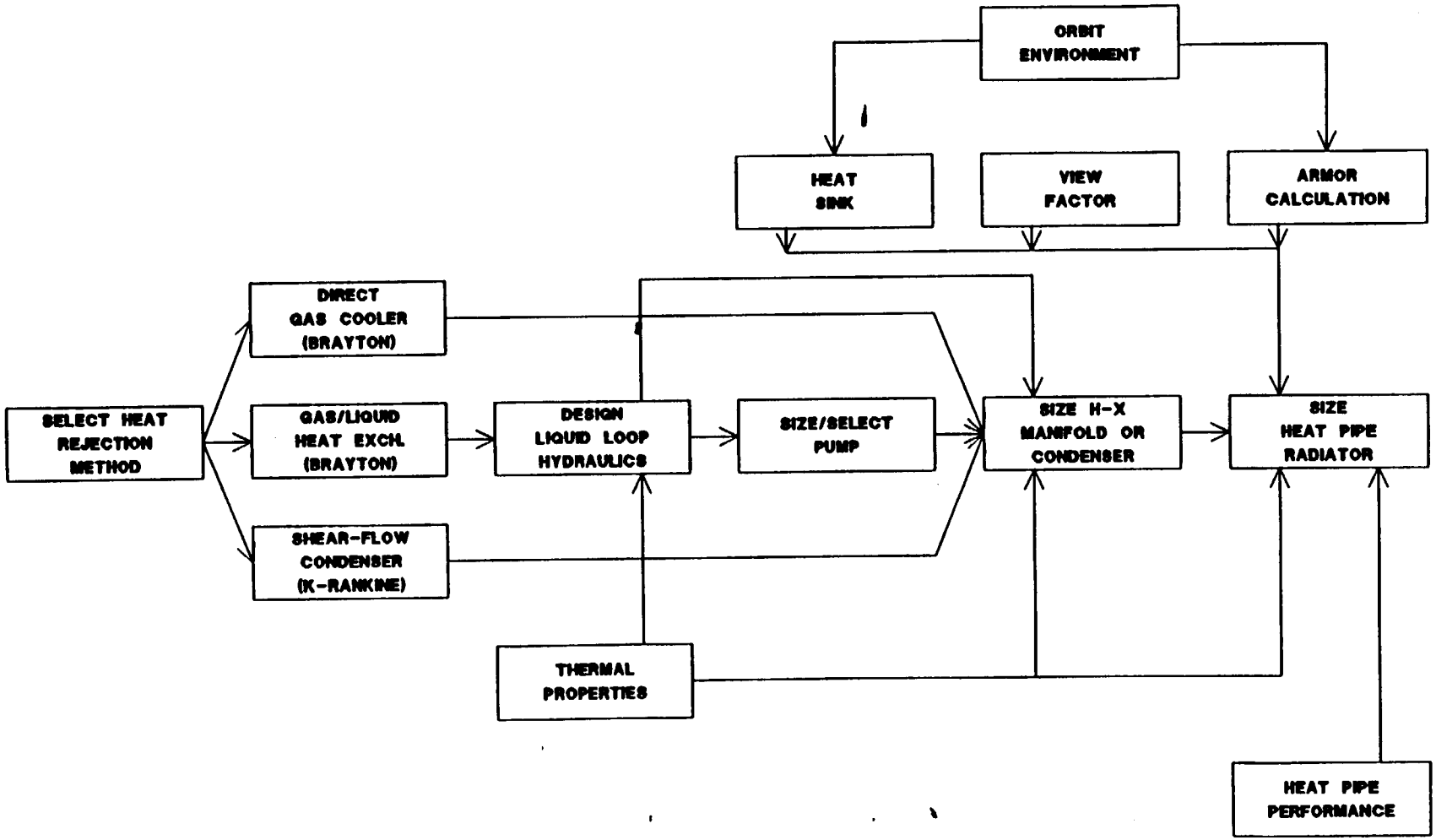

FIGURE 4: OVERALL CODE LOGIC DIAGRAM

shown on Figure 4. In the case of the main radiator subroutine, other subroutines are used to supply armor thickness calculations and heat pipe performance calculations as well as environment and thermal property estimates.

The overall approach to computing heat rejection system performance is to estimate the performance of each equipment element in the string and then design a radiator to be compatible with the specified equipment string and the heat rejection requirements for the power conversion system. Each equipment element results in a temperature loss which is reflected in the mean operating temperature of the radiator. In addition to a temperature drop, the mass of the subsystem and the performance of the power conversion system is affected by the pressure drop of each of the equipment elements. The pressure drop of each element is also computed and is available for use in the system code as well as for pump sizing purposes.

The mass and performance of each equipment element is estimated from first principles using well established thermo-hydraulic analysis methods. The analytical methods generally require that a relatively complete geometrical description of the component be supplied as input. Since such inputs are dependent on having a defined design concept available, it is seen as desirable to have an option in the code where a workable set of design parameters can be generated with only state point and system type inputs required. This option is supplied with the code and it consists of design rules based on previous experience. The option will not generally supply an optimized (namely, area constrained minimum mass) subsystem. However, the data from the option can be used in the primary section of the code to develop optimized configurations for the heat rejection subsystems of Brayton and Rankine power conversion subsystems.

3.0 EQUIPMENT SUBROUTINE/ALGORITHM DEVELOPMENT

3.1 Main Driver Routine (HREJEC)

This subroutine, HREJEC, is the main driver routine which is used to organize the problem, read in the required data inputs, call the appropriate subroutines and print out the results. The logic of HREJEC is reflected in the flow diagram given as Figure 4. The following steps are followed in estimating the mass and performance of heat pipe cooled heat rejection systems in either Brayton or Rankine power conversion systems:

1. Select the heat rejection equipment train and define the equipment elements required. Three options are supplied and the flag, Iprob, is used to select the appropriate option, as:

   a) Direct cooled gas manifold for Braytons.
   b) Liquid loop (NaK only) cooled heat exchanger loop for Braytons.
   c) Shear flow condenser (Potassium only) directly cooled by heat pipes for Rankine cycles.

2. Analyze the Hydraulic loop for the pressure drops required by the heat sink heat exchanger, the liquid loop piping and the heat pipe cooled manifold, if a liquid loop is used.

3. Determine the weight of the pump required.

4. Determine the temperature drop associated with the heat pipe cooled liquid or gas manifold or shear flow condenser.

5. Size a heat pipe radiator to accommodate the temperature drops seen in the loop equipment train and to accommodate the system heat rejection loads.

6. Printout component sizes and masses.

An option selected by the flag, Iselec, can be activated to supply most of the variables needed to run a case is included. A detailed listing of the variables required by the various options is included in Appendix A, the users manual.

3.2 Heat Sink Heat Exchanger

The heat sink heat exchanger in a Brayton system is required to transfer heat from the gas working fluid to a liquid metal coolant loop. It has been demonstrated by numerous prior studies that the most mass efficient of the conventional heat exchanger designs that could be used for this purpose is the shell and tube configuration. A schematic of a typical shell and tube layout is shown in Figure 5. In its usual embodiment, the gas stream is confined to the shell side, while the liquid metal is confined to the tube side

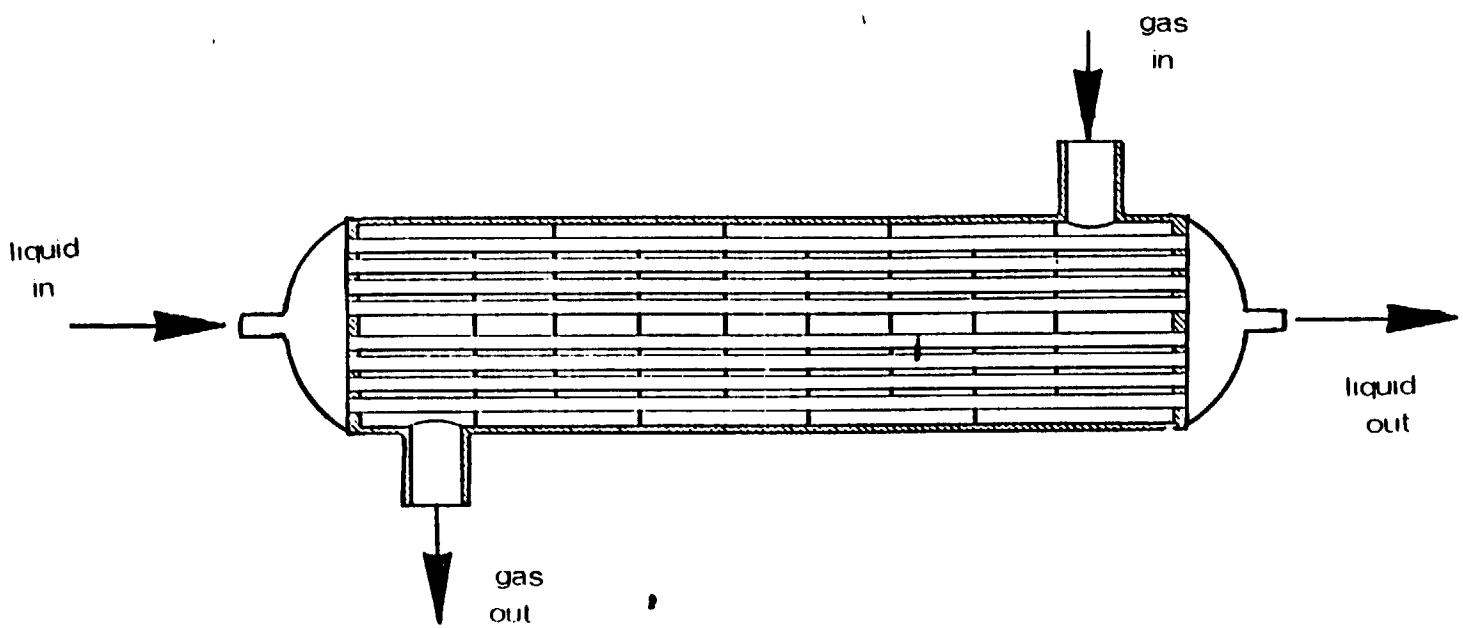

BASIC HEAT EXCHANGER LAYOUT

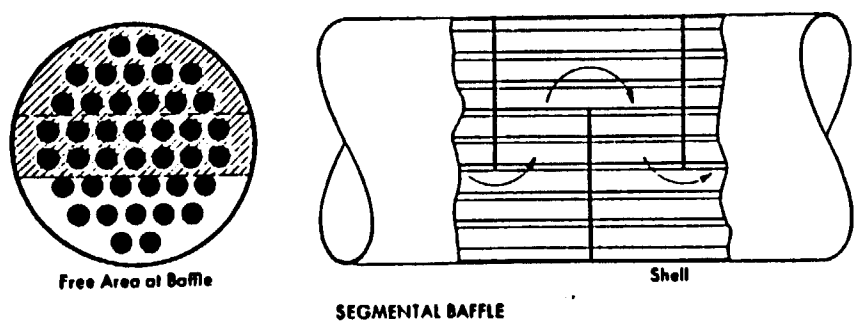

DESIGN AND FLOW DETAILS

Figure 5: SHELL AND TUBE HEAT EXCHANGER GEOMETRY AND FLOW PATHS

of the heat exchanger. Since the gas and liquid streams in the Brayton application are at relatively low pressures, the use of relatively thin shells and tube materials is possible.

The heat sink heat exchanger size estimating subroutine is based on a computation of the overall heat transfer coefficient developed in a shell and tube heat exchanger with gas on the shell side of the exchanger and liquid on the tube side. The details of the computation roughly follow the development due to Bell [1]. Most of the construction details are assumed to be optimum with this method and the distance between tube rows in the direction perpendicular to the flow is assumed to be equal to the tube pitch. Several correlations are available for the heat transfer and friction factor coefficients on the shell side. The ranges of these correlations is shown on Figure 6. The correlation due to Bell was selected for use in the heat rejection subsystem design and analysis code since it is relatively conservative and nearly identical to the proprietary HTRI correlation. The tube side heat transfer correlation used is due to Lyon as quoted by Kreith [2]. This is the generally accepted correlation for the heat transfer to liquid metals under conditions of uniform heat flux. The Lyon correlation is represented by equation 1, below.

$$N_u = 7.0 + 0.025 * (Re_d * P_r)^{0.8} \qquad \text{----- (1)}$$

where:

N_u = Nusselt Number

R_{eD} = Reynolds Number based on diameter

P_r = Prandtl Number

The friction factor for the turbulent flow of liquids or gases in tubes is given by an equation due to Miller [3]. This relation, as given by equation 2, gives a reasonably good representation of the Moody diagram and has the advantage of being an explicit expression, thereby not requiring an iterative calculation.

$$f = \frac{0.25}{\left[LOG_{10}\left(\frac{e}{3.7*d} + \frac{5.74}{R_{eD}^{0.9}}\right)\right]^{2.0}} \qquad \text{----- (2)}$$

where:

e = Mean Surface roughness height

d = Tube Diameter

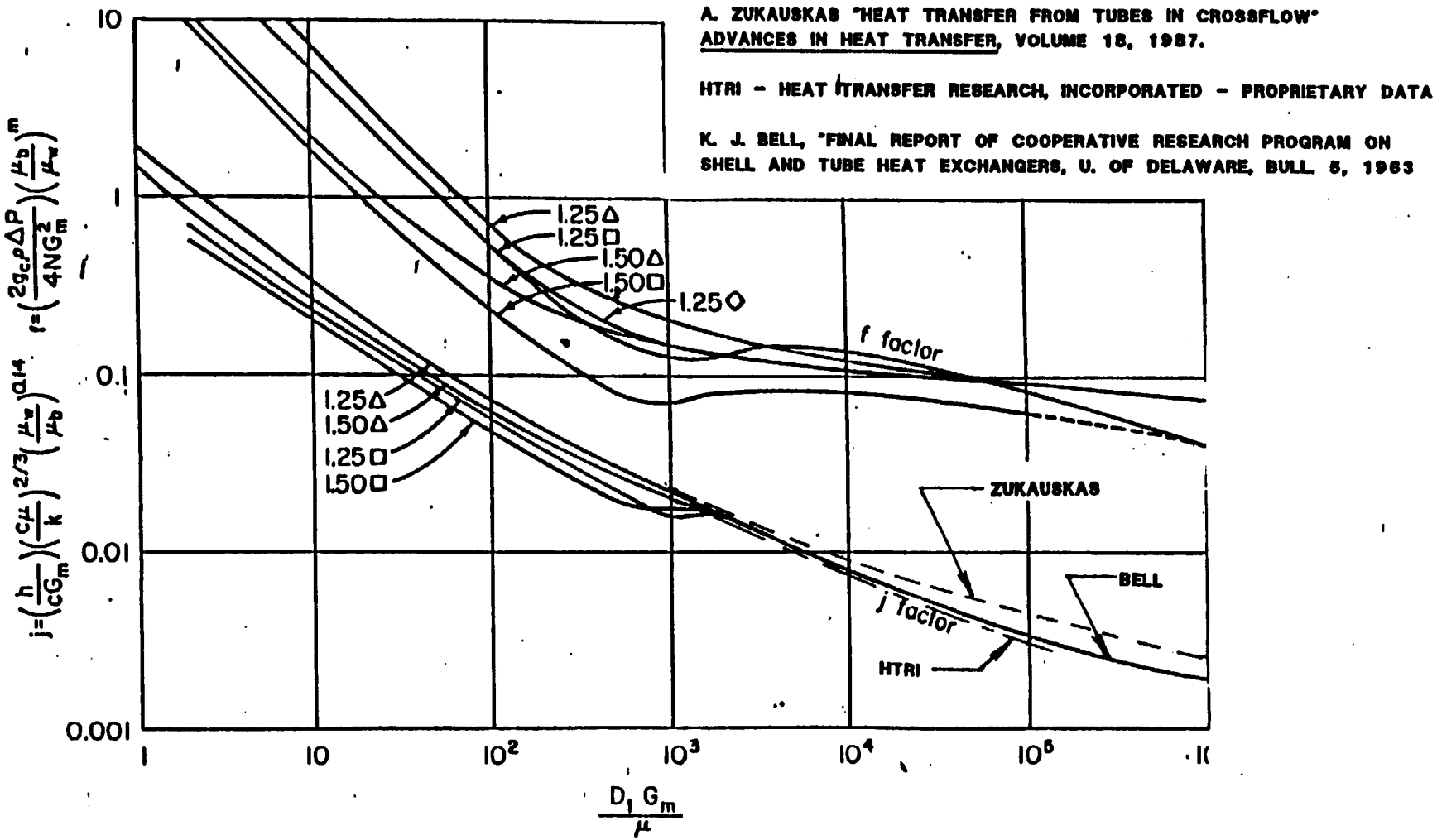

Figure 6: SHELL-SIDE HEAT TRANSFER COEFFICIENT CORRELATION COMPARISON

The calculation proceeds by guessing an overall heat transfer coefficient, sizing the exchanger and then checking if the guess was correct. If the resulting exchanger is larger than required, the code reduces the overall diameter and repeats the calculation until a reasonably close approximation to the required exchanger duty is found. Conversely, if the resulting exchanger is smaller than required, the code increases the overall diameter and repeats the calculation, as above. Once the proper overall size is determined, the code proceeds to compute the mass of the component parts of the heat exchanger. Shell thickness is derived from an empirical representation of the results of prior calculations. Masses are computed by simple density times part volume relations. The components included are the insulation, heat exchanger heads, shell, plates, tubesheets, and tubes. The supporting structure for the heat exchanger is estimated as five percent of the overall mass of the heat exchanger unit. It is to be noted that the material thicknesses used for the design of these heat exchangers are near the absolute minimum possible and are representative of heat exchangers operated under very precisely defined conditions, manufactured using state of the art techniques and fully utilizing the latest in materials advances. As a result they will be very expensive to fabricate and develop. A more economical unit on the other hand will have significantly higher mass.

3.3 NaK Piping

The heat absorbed by the heat rejection heat exchanger is transferred to a heat pipe cooled manifold by a piping system. The piping system affects system mass by providing resistance to the pump, requiring a volume of metal to provide fluid containment and finally by requiring an inventory of fluid with which to transfer the heat and incidentally keep the piping system filled. Aerospace liquid metal loop systems are usually designed not to exceed a certain maximum flow velocity. This velocity is usually less than about 10 to 12 meters/second. In order to minimize erosion problems with velocities of this magnitude, it is necessary to have an extremely low oxygen content in the flowing fluid. A usually satisfactory value for pipe wall thickness is given by assuming schedule 10 pipe. The use of thinner sections should be carefully evaluated.

The pressure drop in the NaK piping system is estimated from input values of flowrate, pipe diameter, pipe length and number of 90 degree bends in the system. Pipe bend resistances are estimated by use of an empirical equation derived from a cross plot of bend resistance data published by Miller [3]. Pipe friction factors are estimated by means of equation 2. Masses are computed by simple density times part volume relations. The elements included in the mass estimate are the pipe insulation, pipe material and the volume of NaK contained in the piping.

3.4 EM Pump

NaK circulation in the liquid metal heat transfer loop is provided for by an electromagnetic (EM) pump. A sketch of a typical NaK loop based heat rejection plumbing layout showing the integration of EM pump, the volume accumulator and the radiator inlets and outlets is shown in Figure 7. Rocketdyne has performed detailed EM pump design and configuration selection studies over the past several years. The results of these studies can be roughly correlated by an expression for pump mass as a function of hydraulic pumping power required to operate a NaK loop. This expression is given as:

$$M_{pump}=16.783+0.1465*P_{hyd} \qquad \text{---- (3)}$$

where:

M_{pump} = Pump and Power Control Mass (Kg)

P_{hyd} = Hydraulic Power Required to Operate Loop (Watts)

Equation 3 is based on several designs for DC conduction EM pumps which featured a two throat configuration. One of the throats is plumbed to the cold leg of the loop, while the other is plumbed to the hot leg. A detailed analysis of the performance and mass of EM pumps is given by Baker and Tessier [4].

3.5 Expansion Compensator

The expansion compensator or volume accumulator unit (VAU) provides for NaK expansion during system startup and provides for overpressure on the NaK to prevent the initiation of local boiling. The VAU is usually located on the radiator manifold outlet line (the lowest temperature point in the system) and is connected to the main branch line by smaller diameter tubing. The design of VAU's is based on the amount of NaK volume change expected in the heat transfer loop between a nominal 311 K temperature level and the maximum operating temperature of the loop. A safety factor of 1.2 is customarily applied to the estimate of NaK volume change. Rocketdyne has conducted several design and selection studies of VAU's for other programs. Details of a typical VAU design are given in Figure 8. The mass of material used in these designs is well correlated by the following equation:

$$M_{vac}=0.4536*[10.0^{(0.66*\log_{10}(\frac{V_{acc}}{0.0164}-0.28)}] \qquad \text{---- (4)}$$

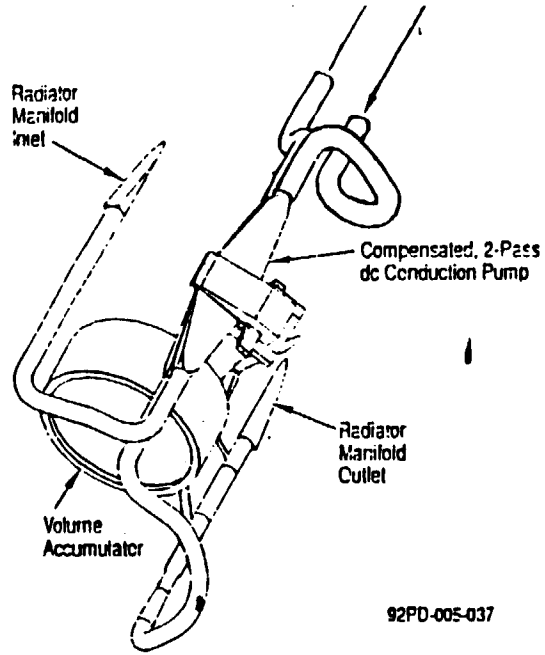

Figure 7: TYPICAL NaK LOOP PLUMBING FOR POWER SYSTEM HEAT REJECTION

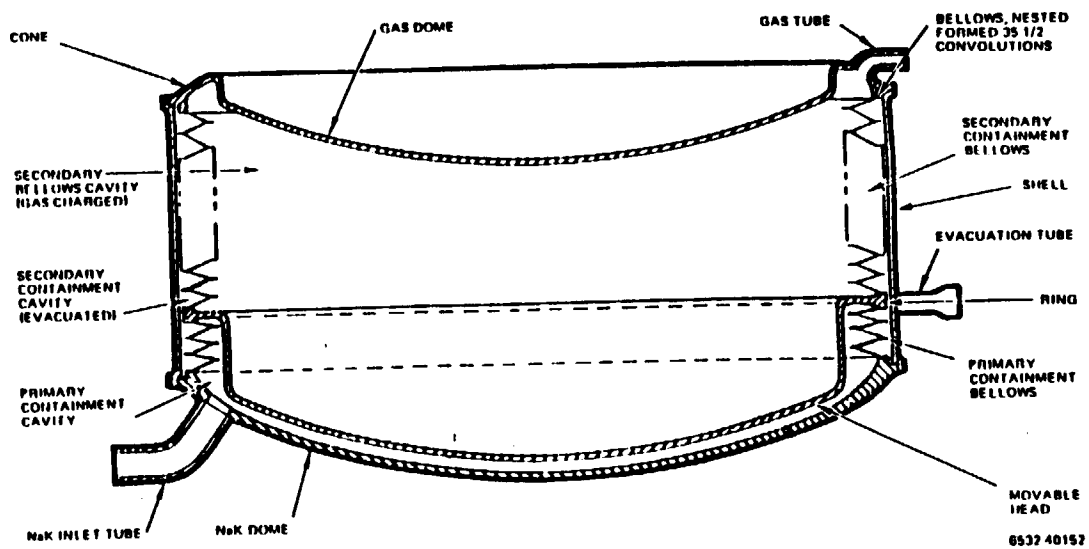

Figure 8: VOLUME ACCUMULATOR UNIT DESIGN CONCEPT DETAILS

where:

V_{acc} = Loop volume change (Liters)
M_{vac} = Mass of volume accumulator unit (dry) (Kg)

A detailed computer code for the analysis of the performance and mass of VAU units of the type illustrated in Figure 8 is given by Whitaker and Shimazaki [5].

3.6 Gas/Liquid Heat Pipe Manifold

Heat is transferred to the heat pipe/fin assemblies by means of a heat pipe cooled manifold. The basic configuration of the manifold is a single line of tubes contained in a shroud. Braze cans are used to provide for the attachment of the heat pipe fin assemblies into the shroud. It is assumed that the flow pattern in the manifold can be tailored to simulate the flow in a heat exchanger tube bundle. Tailoring the flow in this manner will require that an undulating wall shape be used to contain the flow. A close approximation to the required shape of this wall can be determined with CFD methods. A diagram of the manifold layout is given in Figure 9.

The heat transfer and friction factor correlation used for the manifold is given as Figure 10. This correlation is adapted from the correlation given by Bell [1] for the case where a large number of tube rows is used. Heat transfer through the walls of the manifold is by conduction through a braze can, a braze joint, the heat pipe wall to the evaporating fluid of the heat pipe. An option is provided for the use of fins around the braze cans. This may be useful in cases where gas is used in the manifold. The fins are assumed to span the entire manifold since the use of unfinned areas would result in bypassing of the flow which is not accounted for in this code.

The heat balance across the wall of a can/ braze joint/ heat pipe assembly is solved to give the film temperature drop through the manifold. A closed form expression was derived to estimate this parameter. The heat flux used for the estimation of average film temperature drop was the average heat flux value. In practice, the film temperature drop will be highest at the manifold inlet and decreasing toward the manifold outlet. The average value, however, will give the average film temperature drop which is used to estimate the average radiator operating temperature.

Manifold mass is computed by simple density times part volume relations. The elements included in the mass estimate are the manifold braze can mass, manifold container wall mass, manifold braze mass, and for liquid cooled manifolds, the mass of the NaK inventory in the manifold. It is expected that it will usually be desirable to leave the manifold uninsulated. Armor mass for the

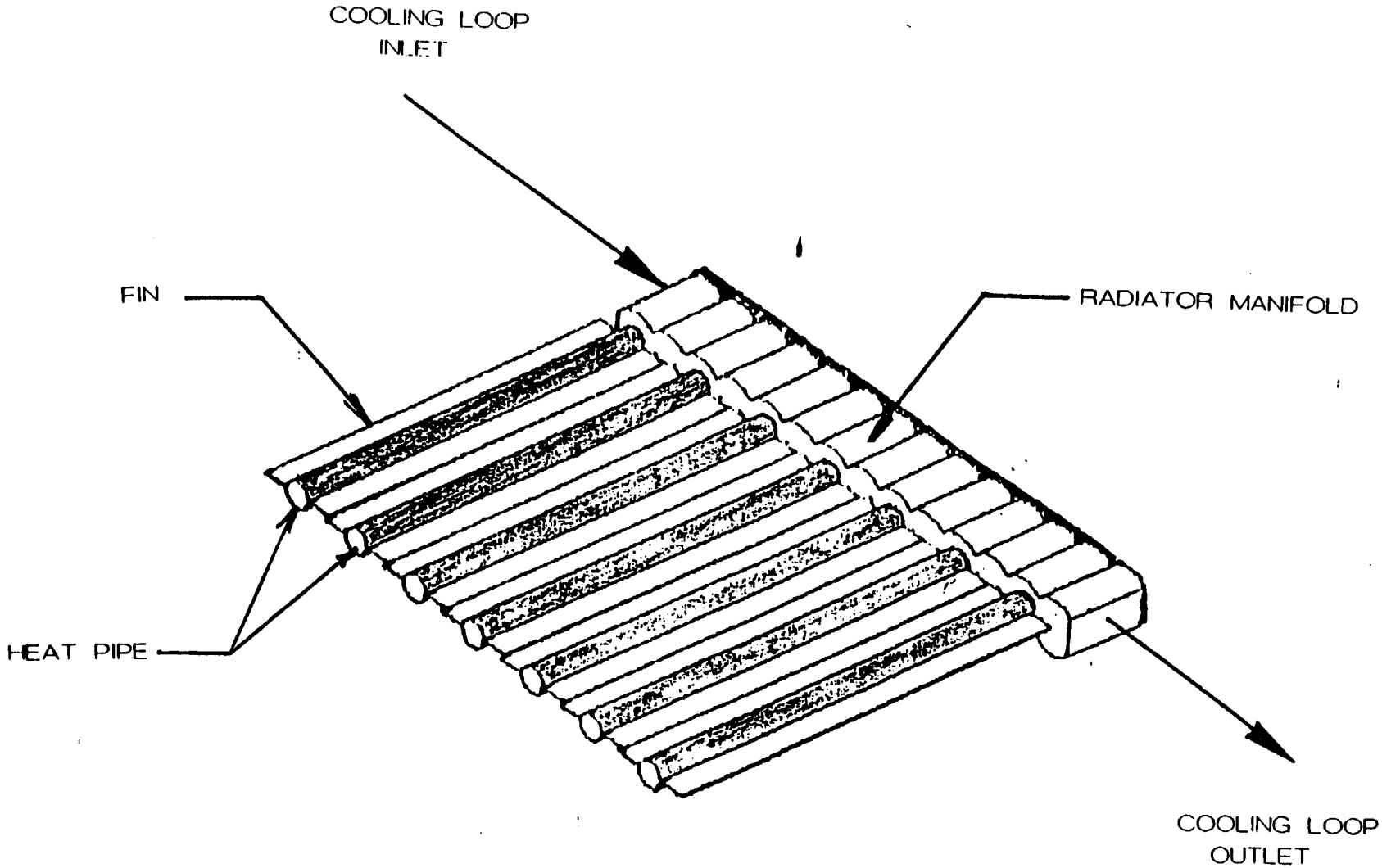

Figure 9: GAS/LIQUID HEAT PIPE, FIN AND MANIFOLD CONFIGURATION

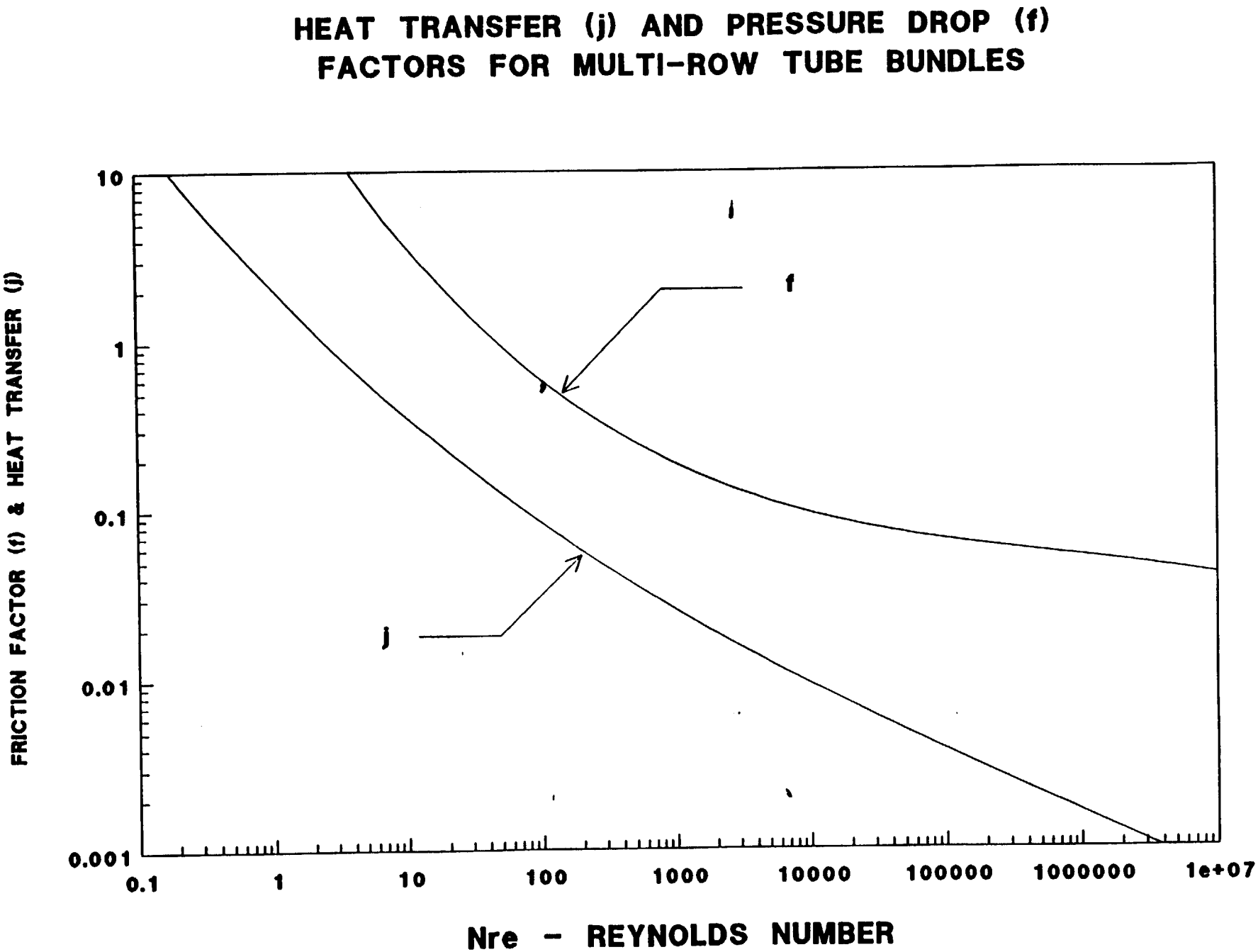

Figure 10: MANIFOLD SHELL-SIDE HEAT TRANSFER AND PRESSURE DROP

manifold is not included in the above calculation since the manifold is assumed to be shielded from its environment by other components on the spacecraft.

3.7 Shear Flow Condenser/Manifold

The K-Rankine cycle requires a condenser to directly reject waste heat from the cycle. A shear flow device has been identified as being the most likely candidate for this application since its operation does not require the presence of a gravity field. A flow schematic for a heat pipe cooled shear flow condenser is given in Figure 11.

The approach to analyzing the performance of the shear flow condenser is similar to the one used for the convectively cooled manifolds. The code first estimates the proportion of the manifold that is required for subcooling and the portion required for condensing the wet or saturated inlet flow. The manifold routine cannot accommodate superheated flow, due to the fact that either large surface areas or flow dilution must be used to provide desuperheating. A separate piece of equipment is usually used in commercial or utility practice. The code then computes an average film temperature drop for condensing and for subcooling in a manner similar to that used for the convective manifolds. An average value for film temperature drop is then found by averaging the above values weighted by the number of heat pipes involved in each process. Condenser pressure drop is computed for the condensing region and for the subcooling region and then added.

The model used to estimate shear flow condensation is based on computing the condensation of pure vapors inside horizontal tubes. At high Reynolds numbers, the heat transfer rate is controlled by the vapor flow heat transfer coefficient to the continuously forming film on the duct wall. The thickness of this film increases with flow manifold length. Gas phase heat transfer coefficients are estimated by the use of common empirical relations. The model is assumed to be valid provided that the flow is in the shear flow regime. A test is provided in the calculations to determine if the flow is in the shear flow regime, however, the code only issues a warning that the manifold is operating in an invalid flow regime. If such an event occurs, the results of the condensing manifold performance estimating routine is invalid and the user must make a change to the design. This change will usually consist of increasing the local vapor flow velocity in the manifold.

Manifold mass is computed by simple density times part volume relations. The elements included in the mass estimate are the manifold wall mass, manifold to heat-pipe braze mass, the mass of any manifold insulation, and the mass of the NaK inventory in the subcooler portion of the manifold. Armor mass for the manifold is not included in the above calculation since the manifold is

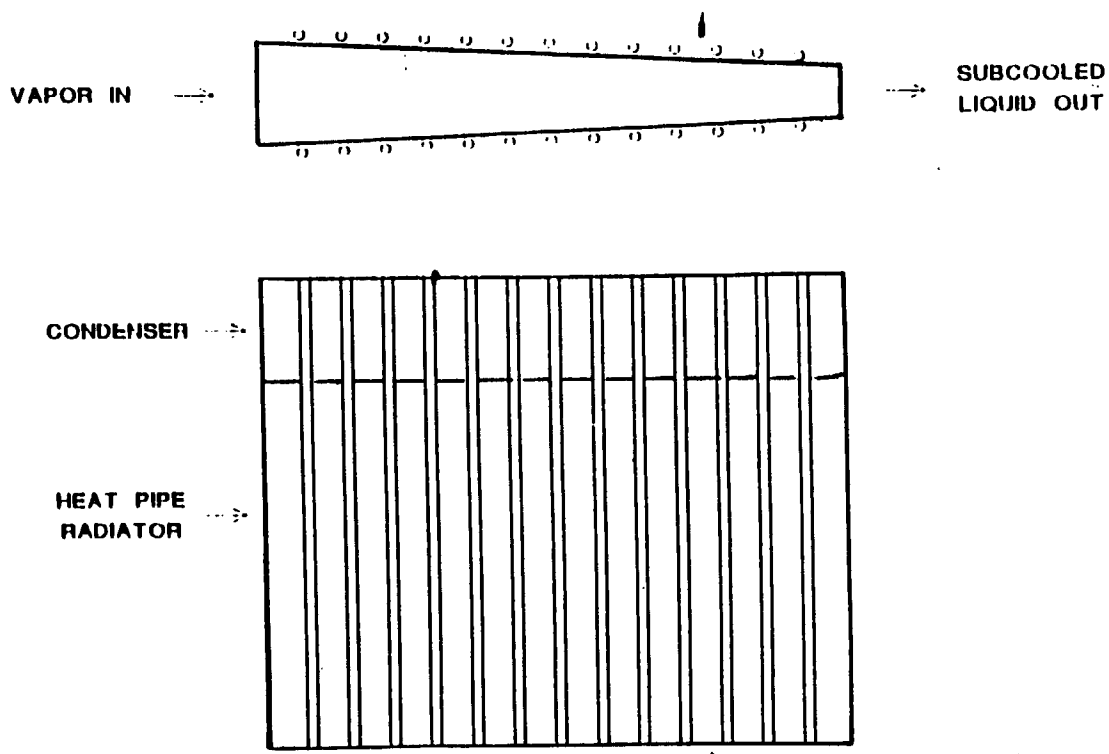

Figure 11: SHEAR CONTROLLED FLOW CONDENSER AND HEAT PIPE RADIATOR FLOW SCHEMATIC

assumed to be shielded from its environment by other components on the spacecraft.

3.8 Gas Ducting

Cycle reject heat can be transferred to a heat pipe cooled gas manifold by a gas ducting system. The gas ducting system affects system mass by providing resistance to the Brayton compressor and by requiring a volume of metal to provide fluid containment. Aerospace gas ducting systems are usually designed not to exceed a certain maximum flow velocity. This velocity is usually less than about 30 to 40 meters/second in order to avoid excessive pressure drop. A usually satisfactory value for pipe wall thickness is given by assuming the duct will be fabricated from 1/16" sheet steel. The use of thinner sections should be carefully evaluated.

The pressure drop in the gas ducting system is estimated from input values of flowrate, pipe diameter, pipe length and number of 90 degree bends in the system. Pipe bend resistances are estimated by use of an empirical equation derived from a cross plot of bend resistance data published by Miller [3]. Pipe friction factors are estimated by means of equation 2. Masses are computed by simple density times part volume relations. The elements included in the mass estimate are the duct insulation and duct material.

3.9 Heat Pipe Radiator

Cycle waste heat is ultimately rejected by the heat pipe/fin radiator surface. The code determines the size of the heat pipe and fin assembly necessary to reject the specified amount of cycle waste heat. The heat pipe radiator subroutine is based on a detailed calculation of the amount of heat that can be radiated from the condenser section of a finned heat pipe. The code can be adapted to use any heat pipe working fluid for which the appropriate fluid physical properties are available. The calculations in the subroutine start with an initial estimate of the length of heat pipe required. The heat pipe length is sectioned into a prespecified number of segments which are treated as isothermal. The amount of heat radiated from a particular segment is computed and compared to the various heat pipe performance limits that apply at the particular length step. The saturation temperature is then adjusted and the heat rejection from the next step is computed. The overall length of heat pipe is adjusted to radiate the correct amount of heat by iterating on the amount of heat rejected. The subroutine uses the calculations for a single heat pipe to scale the results for the entire radiator. The evaporator inlet temperature for this single heat pipe is taken as the fourth power average temperature of the radiator.

The effect of temperature variation in the spanwise direction along the radiator surface is evaluated using the numerical results of Lieblein [6] for radiating fins of constant cross section. The

radiating efficiency presented by Lieblein was empirically represented by a relationship developed by Nervenga and Zarotti [7]. This expression yields an estimate of the fin efficiency directly, without iterations or table lookups, saving considerable computer run time.

The radiator is generally assumed to be radiating from both sides as in a flat plate configuration. However, cylindrical and conical geometries are available as options.

The use of heat pipes to dissipate waste heat from the cycle offers an opportunity to use redundant heat pipes to offset radiator armor. Using this approach, the code uses the binomial equation to estimate the required heat pipe reliability as a function of system reliability and redundancy. The value of heat pipe reliability is then used in the expression developed by Haller and Lieblein [8] to estimate the armor or heat pipe wall thickness required to provide sufficient meteorite protection to meet the heat pipe reliability requirement.

Masses are computed by simple density times part volume relations. The elements included in the mass estimate are the heat pipe container tube, the heat pipe wick, the heat pipe working fluid, the fins, the armor and an allowance for radiator structural support. This allowance is taken as 10 % of the mass of the radiator components.

4.0 SUPPORTING SUBROUTINE/ALGORITHM DEVELOPMENT

4.1 Orbit/Environment

Subroutine HRENVR computes the values of the meteorite or debris flux constants and the solar flux constant for use in the armor sizing subroutine and the heat sink temperature estimating subroutine. The meteorite and debris information is based on the 1990 Kessler model. The solar constant is scaled from 1.0 AU by the inverse ratio of the AU's from the sun, squared.

Kessler gives the meteorite flux model for space not influenced by the earth's gravitational field as:

$$N_t = \left[\frac{1.0}{(2200*m^{0.306}+15.0)^{4.38}} + \frac{1.3*10^{-9}}{(m+(10^{11}*m^{2.0})+(10^{27}*m^{4.0}))} + \frac{1.3*10^{-16}}{(m+(10^{+6}*m^{2.0}))^{0.85}} \right] * \left(\frac{1.0}{R_{sun}^{1.5}} \right) \quad \ldots (5)$$

where:

N_t = Number of particles of mass, m, or greater per square meter per second.

m = Particle mass in grams.

R_{sun} = Distance from sun (AU's)

The orbits that are influenced by the earth's gravitational field are taken to be those between LEO and GEO. For these orbits, the earth focusing factor and the earth shielding factor are applied as:

$$ShieldingFactor = 0.5*(1.0+\cos[\arcsin(\frac{R_e}{R_e+H})])$$

and

$$FocusingFactor = 1.0+(\frac{R_e}{r})$$

and for the region influenced by the gravitational attraction of the earth:

$$N_t = \frac{N_t}{0.565}$$

where:

R_e = Earth Radius + 100 KM atmosphere (6478 KM)
H = Height above Earth's atmosphere (Orbit altitude - 100 KM)
r = Orbit Radius (from earth center) = Orbit Altitude + 6378 KM.

The debris flux model is given by Kessler as:

$$N_t = 3.168896 * 10^{-8} * [H * \phi * \psi * (F_1 * g_1 + F_2 * g_2)] \qquad \ldots(6)$$

where:

$$g_1 = (1.0 + q)^{t-1988}$$

q = 0.02, if q < 2011.
t = Year Vehicle Launched

or:

$$g_1 = (1+q)^{23} * (1+q')^{t-2011}$$

q = q' = 0.04, if q > 2011.

and:

$$g_2 = 1.0 + (p * (t - 1988))$$

where:

p = Assumed annual growth rate of mass in orbit

Also:

$$F_1 = \frac{1.22 * 10^{-5}}{d^{2.5}}$$

and:

$$F_2 = \frac{8.1 * 10^{10}}{(d+700)^6}$$

where:

$$d = \left(\frac{6.0 * m}{(2.8 * \pi)}\right)^{0.3623}, m > 0.3076 gram$$

or:

$$d=\left(\frac{6.0*m}{4.7*\pi}\right)^{0.3333}, m<0.3076 gram$$

and:

$$\phi_1=10.0^{\left(\frac{H}{200}-\frac{S}{140}-1.5\right)}$$

where:

S = 87.2

and:

$$\phi=\frac{\phi_1}{(\phi_1+1)}$$

and:

$$H=\left[10.0^{\exp\left(\frac{-(\log_{10}(d)-0.78)^2}{0.637^2}\right)}\right]^{0.5}$$

and for: 28.5 < i < 80.0 degrees

$$\psi=-0.313471+(0.084327*i)-(0.00186*i^2)+(0.000014*i^3)$$

where:

i = Orbit inclination in degrees.

The meteorite flux constants for use in the armor requirements equation evaluated in subroutine ARMOR are estimated from the meteorite model and from the debris model for orbits from LEO to GEO. The larger of the two values is used. For orbits beyond GEO, debris is not usually found, therefore only the meteorite flux is considered.

The solar flux is scaled as a function of distance from the sun in AU, as:

$$Q_{sun}=1353.0*\left(\frac{1.0}{R}\right)^2; watts/meter^2$$

This flux is used in the HTSINK routine to estimate the effective sink temperature seen by the radiator.

4.2 Thermal Properties

The code makes extensive use of thermal properties in its many subroutines. The majority of the properties required to run the code are built in as curve-fit subroutines. There are several places in the code where the same thermal properties are used under different names and come from different subroutines. These cases developed from the fact that several existing subroutines/ algorithms were used to describe some of the components in the system. The routines often used different systems of units and had their own property generating subroutines. These were preserved in order to take advantage of the calibration and development that the routines had at the time of their application. Making all of the subroutines in the code use the same property subroutines will be an area of ongoing code development.

4.3 Armor Thickness Estimates

Subroutine HRARMR computes the amount of armor required in order to provide a specific non-puncture probability in the specified orbit for the specified mission duration. Armor thickness is computed from a semi-empirical relationship developed by Haller and Leiblien [8]. The equation developed requires that specific functions of the armor material be input and that specific meteorite and orbital debris parameters be specified. The orbital parameters are computed in subroutine HRENVR, described above and the materials dependent parameters are given in Table 3. The empirical relationship used is:

$$\delta = \gamma_r a \left[\frac{\rho_p}{\rho_a}\right]^{1/2} \left[\frac{V_p}{C_a}\right]^{2/3} \left[\frac{6}{\pi \rho_p}\right]^{1/3} \left[\frac{E\alpha A_{vt}}{-\ln(P_o)}\right]^{1/3\beta} \left[\frac{2}{2\beta+2}\right]^{1/3\beta} \left[\frac{T}{T_r}\right]^{1/6} \quad \ldots (7)$$

where:

γ_r = Room temperature cratering coefficient (from Table 3)

a = Rear surface damage thickness factor (from Table)

ρ_p = Impacting particle specific gravity (values are built in to the subroutine)

ρ_a = Armor specific gravity - (Grams/cu-Cm)

V_p = Impacting particle velocity (values are built in to subroutine)

C_a = Armor sonic velocity

A_v = Target area

t = Exposure time (mission duration)

P_o = Probability of non-puncture (ie; for example 0.9, 0.99, 0.999)

T = Average armor temperature

δ = Armor thickness (units depend on other units used)

TABLE 3
CRATERING COEFFICIENT VALUES AND DAMAGE THICKNESS FACTORS FOR SELECTED MATERIALS

TARGET MATERIAL	CRATERING COEFFICIENT γ_r
356 - T51 Aluminum	2.15
7075 - T6 Aluminum	2.00
2024 - T6 Aluminum	1.70
Nb + 1% Zr	1.81
316 - Stainless Steel	2.19
A- 286	1.77
Inconel - 718	1.85
L - 605	2.00
Vanadium	1.71
Tantalum	1.77
TZM - Molybdenum	2.00
Carbon-Carbon	1.70

Damage Thickness Factors for Incipient Dimple, Spall and Perforation

Material	Dimple	Spall	Perforation
2024 - T6 Aluminum	2.5	2.3	1.7
316 - Stainless Steel	2.35	1.9	1.4
A - 286	2.80	2.0	1.65
Nb + 1% Zr	4.5	4.0	1.7
Inconel - 718	3.0	2.5	1.75
Cobalt Alloy L-605	2.5	2.1	1.7
Titanium	3.1	2.6	1.65
Vanadium	3.6	2.5	1.55
TZM - Molybdenum	3.25	3.0	1.85
Carbon/Carbon	2.5	2.3	1.70

Notes:

1. For heat pipe radiator "perforation" is usual design approach.
2. For pumped loop radiator "dimple" is preferred, but "spall" will usually be acceptable.

4.4 Sink Temperature Estimates

Subroutine HRTSNK computes the maximum sink temperature experienced by a body in a given orbit. The sink temperature is a function of the solar constant, which is determined by subroutine HRENVR. In earth orbit, the energy reflected from the earth and the energy radiated by the earth are significant. Values of the earth reflected and earth emitted radiation are built into the code and used to determine the environmental flux constant for LEO to GEO orbits.

4.5 Statistical Equation Solution Routines

An appropriate relationship with which to estimate the reliability of a heat pipe as a function of system reliability and redundancy is the binomial equation, which can be stated as:

$$U=\sum_{H=J+1}^{K} \left(\frac{K!}{(K-H)!\,(H)!}\right)(P)^{H}(1-P)^{K-H} \qquad \ldots (8)$$

where:

- P = Probability of failure of a single heat pipe
- K = Number of heat pipes in the radiator
- J = Number of additional redundant heat pipes
- U = Probability of system failure

The binomial equation assumes that the probabilities of failure will be binomially distributed among the individual heat pipes. The values of U, K, and J are specified and the subroutine/function PNEW iteratetively solves equation 8 to determine P, the probability of failure of an individual heat pipe which is then used in the armor thickness equation discussed above.

5.0 CONCLUSIONS/RECOMMENDATIONS

It is believed that the heat pipe cooled heat rejection subsystem model presented will yield performance and mass results of adequate accuracy for system analysis purposes. The code will accommodate designs for which relatively complete dimensional and operating data are available or it will use a minimum input data set to generate a relatively complete, but not optimized design to use as the basis for optimization studies.

Improvements in several areas of the model are suggested. The use of the various thermal properties routines should be made more consistent so as to eliminate redundant property generating routines; the code can be condensed considerably by eliminating many of the comments and output routines; and the code could probably be made to run considerably faster by the use of improved methods of obtaining numerical convergence. However, the implementation of these changes should be deferred until the code is used in a systems context, so that the actual need for some of the improvements can be better prioritized. A second area of interest may be to couple this code with one of the currently available general optimization codes to produce a relatively complete optimization for the minimum input data case.

REFERENCES

1. K. J. Bell, "Final Report of Cooperative Research Program on Shell and Tube Heat Exchangers", University of Delaware Engineering Experiment Station, Bulletin # 5, January 1963.

2. F. Kreith, Principles of Heat Transfer, International Textbook Company, Scranton, Pennsylvania, 1958.

3. D. S. Miller, Internal Flow Systems, Volume 5 in the BHRA Fluid Engineering Series, British Hydromechanics Research Associates, 1978.

4. R. S. Baker and M. J. Tessier, Handbook of Electromagnetic Pump Technology, Elsevier Science Publishing Co., New York, 1987.

5. W. D. Whitaker and T. T. Shimazaki, "Volume Accumulator Design Analysis Computer Codes", Atomics International Division of Rockwell International, available as NASA-CR-121246, National Aeronautics and Space Administration, Washington, D. C., contract number AT(04-3)-701, June 30, 1973.

6. S. Lieblein, "Analysis of Temperature Distribution and Radiant Heat Transfer Along a Rectangular Fin of Constant Thickness", NASA TN D-196, NASA Lewis Research Center, Cleveland, OH., 1959.

7. N. Nervegna and G. L. Zarotti, "Space Radiator Design: A Non-Linear Programming Approach", in Proc. 1976 Heat Transfer and Fluid Mechanics Institute, A. A. McKillop, J. W. Baughn and H. A. Deyer, eds., Stanford University Press, Stanford, CA, 1976.

8. H. C. Haller and S. Lieblein, "Analytical Comparison of Rankine Cycle Space Radiators Constructed of Central, Double, and Block-Vapor-Chamber Fin Tube Geometries", NASA TD D-4411, NASA Lewis Research Center, Cleveland, OH., 1968.

APPENDIX A

OPERATING INSTRUCTIONS FOR THE HREJEC CODE

The HREJEC subroutine is designed to estimate the performance and mass of heat rejection subsystems used on space based nuclear power systems. The subroutine offers six options which are selected by the use of the flags Iselec and Iprob.
The selection logic is as follows:

IF Iselec = 1, THEN THE CODE WILL SUPPLY MOST OF THE VARIABLE VALUES NEEDED. IF Iselec = 2, THEN THE USER MUST SUPPLY MOST OF THE VARIABLE VALUES NEEDED

IF Iprob = 1, CODE IS SET UP FOR A DIRECT COOLED BRAYTON CONFIGURATION. (Figure A-1)
IF Iprob = 2, CODE IS SET UP FOR A LIQUID LOOP COOLED BRAYTON CONFIGURATION. (Figure A-2)
IF Iprob = 3, CODE IS SET UP FOR A SHEAR FLOW CONDENSER IN A POTASSIUM RANKINE CYCLE. (Figure A-3)

The subroutine HREJEC is entered by use of the following call statement in the main or driver program:

```
CALL HREJEC(Iselec,Iprob,IENflg,Pin,Tin,Tout,Qrad)
```

In addition to the flags Iselec and Iprob, a flag called IENflg is used to select the environment desired. IENflg is defined as follows:

IENflg = FLAG TO SET ENVIRONMENT DESIRED
= 1, EARTH ORBIT, LEO TO GEO USES GREATER OF DEBRIS OR METEORITE FLUX, NO DEBRIS ABOVE 2000 Km.
= 2, BEYOND EARTH ORBIT, 0.25 TO 2.00 AU

The other variables in the call statement are defined as follows:

Pin = CYCLE WORKING FLUID INLET PRESSURE (Grams/sq-Cm)
Tin = CYCLE WORKING FLUID INLET TEMPERATURE (K)
Tout = CYCLE WORKING FLUID OUTLET TEMPERATURE (K)
Qrad = CYCLE TOTAL HEAT REJECTION RATE REQUIRED (KWt)

In addition to the CALL statement the main program must provide for the opening of a data file called RADAT. The contents of RADAT provide the balance of the data needed to run HREJEC. For the cases that will use the minimum amount of input data to run HREJEC (Iselec = 1), the contents of RADAT are as follows:

IENflg, Halt, HINCL, Rsun
Yrlnch, Time
Pin, Tin, Xmw, Tout
Qrad

If desired, IENflg, Halt, HINCL, Rsun, Yrlnch, and Time may be set equal to zero and the code will use built-in default values for these parameters. If IENflg is not equal zero, then the required parameters are defined as:

Halt = ORBIT ALTITUDE (km)
HINCL = ORBIT INCLINATION ANGLE (28.5 TO 80.0 degress, ONLY)
Rsun = DISTANCE FROM SUN (AU)
Yrlnch = YEAR IN WHICH VEHICLE IS PLACED IN ORBIT
Time = MISSION DURATION (Secs)
Pin = CYCLE WORKING FLUID INLET PRESSURE (Grams/sq-Cm)
Tin = CYCLE WORKING FLUID INLET TEMPERATURE (K)
Xmw = MOLECULAR WEIGHT OF CYCLE WORKING FLUID
Tout = CYCLE WORKING FLUID OUTLET TEMPERATURE (K)
Qrad = CYCLE TOTAL HEAT REJECTION RATE REQUIRED (KWt)

For normal cases where a reasonable definition of the design is available, then the contents of RADAT will vary depending on the case being considered. If Iprob = 1, then the contents of RADAT are as follows:

```
IENflg,Halt,HINCL,Rsun
Yrlnch,Time

GAM,ARSF,Earm,PROB
CONFIG,Xntubes,Xnexpip,Xlflat
Dhpipe,Ifluid,Imatl,Theta
D2rad,Thickm,Thickf,Thick
Em,Alpha,Hap,HArad
Tkfin,Rhocoating,Rhofin,RHOarm
Xladiab,Xmchmas

Iflg2,Hman,Gap,Pitch
Dcan,Dhp,Rc,Rb
Tf,TKfina,TKcan,TKbraze
TKhp,XNf,Xmw,RHOcan
RHObraze,THICKman,Wman

XN9,R9,Dp,SUMLEN
THICKP,RHOPIP,THICKI,RHOINS
```

The required parameters are defined as:

ORBIT DESCRIPTION

Halt = ORBIT ALTITUDE (km)
HINCL = ORBIT INCLINATION ANGLE (28.5 TO 80.0 degress, ONLY)
Rsun = DISTANCE FROM SUN (AU)
Yrlnch = YEAR IN WHICH VEHICLE IS PLACED IN ORBIT
Time = MISSION DURATION (Secs)

RADIATOR DESCRIPTION

GAM,ARSF = PENETRATION CONSTANTS - FUNCTIONS OF THE SPECIFIC MATERIAL (SEE Table 3)
Earm = YOUNGS MODULUS OF ARMOR Grams/sq-Cm)
PROB = NON-PUNCTURE PROBABILITY (0.9, 0.99, 0.999, ETC.)
CONFIG = 1.0, THEN RADIATOR IS A FLAT PLATE, ELSE IS A CONE OR CYLINDER
Xntubes = NUMBER OF PRIMARY HEAT PIPE IN RADIATOR
Xnexpip = NUMBER OF REDUNDENT HEAT PIPES
Xlflat = HEAT PIPE EVAPORATOR LENGTH (Cm)
Dhpipe = HEAT PIPE INSIDE DIAMETER (Cm)
Ifluid = HEAT PIPE WORKING FLUID ID NUMBER (SEE Table 2 for recommendations)
Imatl = HEAT PIPE LINER MATERIAL ID NUMBER (SEE Table 2 for recommendations)
Theta = CONE ANGLE FOR CONICAL RADIATOR (DEGREES)
D2rad = MANIFOLD DIAMETER FOR CONICAL RADIATOR OR MANIFOLD
LENGTH DIVIDED BY 3.141593 FOR FLAT PLATE (Cm)
Thickm = RADIATOR EMISSIVITY CONTROL COATING THICKNESS (Cm)
Thickf = RADIATOR FIN THICKNESS (Cm)
Thick = HEAT PIPE WALL or LINER THICKNESS (Cm)
Em = RADIATOR SURFACE EMISSIVITY
Alpha = RADIATOR SURFACE ABSOPTIVITY
Hap = RADIATOR PROJECTED AREA (TOWARD SUN) (FRACTION OF TOTAL)
HArad = RADIATOR ACTUAL AREA (USUALLY = 1.0)
Tkfin = THERMAL CONDUCTIVITY OF FIN MATERIAL (Watts/(Cm-K))
Rhocoating = COATING MATERIAL DENSITY (Grams/CC)
Rhofin = FIN MATERIAL DENSITY (Grams/CC)
RHOarm = ARMOR DENSITY (Grams/CC)
Xladiab = LENGTH OF ADIABATIC PORTION OF THE HEAT PIPE (Cm)
Xmchmas = MASS OF RADIATOR DEPLOYMENT MECHANISM (KG)

HEAT PIPE COOLED MANIFOLD DESCRIPTION

Iflg2 = FLAG TO SET MANIFOLD WORKING FLUID
1 = He-Xe MIXTURE
2 = NaK
Hman = MANIFOLD HEIGHT (Cm)
Gap = MANIFOLD WIDTH (Cm)
Pitch = DISTANCE BETWEEN CAN (HEAT PIPES) CENTERLINES (Cm)
Dcan = OUTSIDE DIAMETER OF MANIFOLD BRAZE CANS (Cm)
Dhp = INSIDE DIAMETER OF HEAT PIPE (Cm)
Rc = MANIFOLD BRAZE CAN INSIDE RADIUS (Cm)
Rb = BRAZE JOINT INSIDE RADIUS (Cm)
Tf = FIN THICKNESS (Cm)
TKfina = THERMAL CONDUCTIVITY OF FIN MATERIAL (Watts/(Cm-K))
TKcan = THERMAL CONDUCTIVITY OF MANIFOLD CAN MATERIAL (")
TKbraze = THERMAL CONDUCTIVITY OF MANIFOLD BRAZE ALLOY (")
TKhp = THERMAL CONDUCTIVITY OF HEAT PIPE WALL MATERIAL (")
XNf = TOTAL NUMBER OF FINS FOR THE MANIFOLD HEIGHT
Xmw = MOLECULAR WEIGTH OF MANIFOLD WORKING FLUID
RHOcan = DENSITY OF MANIFOLD MATERIAL (Grams/CC)
RHObraze = DENSITY OF BRAZE MATERIAL (Grams/CC)
THICKman = MANIFOLD MATERIAL THICKNESS (Cm)
Wman = MANIFOLD FLOWRATE (KG/HR)

DUCTING DESCRIPTION

XN9 = NUMBER OF 90 DEGREE ELBOWS OR EQUIVALENT IN DUCT SYSTEM
R9 = AVERAGE RADIUS FOR 90 DEGREE ELBOWS (Cm)
Dp = INSIDE DUCT DIAMETER (Cm)
SUMLEN = TOTAL LENGTH OF DUCT SYSTEM (Cm)
THICKP = DUCT WALL THICKNESS (Cm)
RHOPIP = DUCT WALL DENSITY (Grams/CC)
THICKI = DUCT INSULATION THICKNESS (Cm)
RHOINS = DUCT INSULATION DENSITY (Grams/CC)

If Iprob = 2, then the contents of RADAT are as follows:

IENflg,Halt,HINCL,Rsun
Yrlnch,Time

GAM,ARSF,Earm,PROB
CONFIG,Xntubes,Xnexpip,Xlflat
Dhpipe,Ifluid,Imatl,Theta
D2rad,Thickm,Thickf,Thick
Em,Alpha,Hap,HArad
Tkfin,Rhocoating,Rhofin,RHOarm
Xladiab,Xmchmas

IHXflg,UEST,TCIN,TCOUT
WDOTS,AMWS,TINS,DENINS
DENSSH,DTUBE,PR,TTUBE
ANPLATES,WDOTT,AKTUBE

Iflg2,Hman,Gap,Pitch
Dcan,Dhp,Rc,Rb
Tf,TKfina,TKcan,TKbraze
TKhp,XNf,Xmw,RHOcan
RHObraze,THICKman,Wman

XN9,R9,Dp,SUMLEN
THICKP,RHOPIP,THICKI,RHOINS

The required parameters are defined as:

ORBIT DESCRIPTION

Halt = ORBIT ALTITUDE (km)
HINCL = ORBIT INCLINATION ANGLE (28.5 TO 80.0 degress, ONLY)
Rsun = DISTANCE FROM SUN (AU)
Yrlnch = YEAR IN WHICH VEHICLE IS PLACED IN ORBIT
Time = MISSION DURATION (Secs)

RADIATOR DESCRIPTION

GAM,ARSF = PENETRATION CONSTANTS - FUNCTIONS OF THE SPECIFIC MATERIAL (SEE Table 3)
Earm = YOUNGS MODULUS OF ARMOR Grams/sq-Cm)
PROB = NON-PUNCTURE PROBABILITY (0.9, 0.99, 0.999, ETC.)
CONFIG = 1.0, THEN RADIATOR IS A FLAT PLATE, ELSE IS A CONE OR CYLINDER
Xntubes = NUMBER OF PRIMARY HEAT PIPE IN RADIATOR
Xnexpip = NUMBER OF REDUNDENT HEAT PIPES
Xlflat = HEAT PIPE EVAPORATOR LENGTH (Cm)
Dhpipe = HEAT PIPE INSIDE DIAMETER (Cm)
Ifluid = HEAT PIPE WORKING FLUID ID NUMBER (SEE Table 2 for recommendations)
Imatl = HEAT PIPE LINER MATERIAL ID NUMBER (SEE Table 2 for recommendations)
Theta = CONE ANGLE FOR CONICAL RADIATOR (DEGREES)
D2rad = MANIFOLD DIAMETER FOR CONICAL RADIATOR OR MANIFOLD
LENGTH DIVIDED BY 3.141593 FOR FLAT PLATE (Cm)
Thickm = RADIATOR EMISSIVITY CONTROL COATING THICKNESS (Cm)
Thickf = RADIATOR FIN THICKNESS (Cm)
Thick = HEAT PIPE WALL or LINER THICKNESS (Cm)
Em = RADIATOR SURFACE EMISSIVITY
Alpha = RADIATOR SURFACE ABSOPTIVITY
Hap = RADIATOR PROJECTED AREA (TOWARD SUN) (FRACTION OF TOTAL)
HArad = RADIATOR ACTUAL AREA (USUALLY = 1.0)
Tkfin = THERMAL CONDUCTIVITY OF FIN MATERIAL (Watts/(Cm-K))
Rhocoating = COATING MATERIAL DENSITY (Grams/CC)
Rhofin = FIN MATERIAL DENSITY (Grams/CC)
RHOarm = ARMOR DENSITY (Grams/CC)
Xladiab = LENGTH OF ADIABATIC PORTION OF THE HEAT PIPE (Cm)
Xmchmas = MASS OF RADIATOR DEPLOYMENT MECHANISM (KG)

HEAT SINK HEAT EXCHANGER DESCRIPTION

IHXflf = 1, THEN TUBE SIDE FLUID IS LITHIUM
IHXflg = 2, THEN TUBE SIDE FLUID IS NaK-78
UEST = INITIAL VALUE OF Uoverall (Watts/sqCm-K)
TCIN = COLD SIDE Inlet Temperature (K)
TCOUT = COLD SIDE Outlet Temperature (K)
WDOTS = SHELL SIDE FLUID Flowrate (KG/Sec)
AMWS = MOLECULAR WEIGHT OF SHELL SIDE FKUID
TINS = OD INSULATION THICKNESS (Cm)
DENINS = OD INSULATION DENSITY (Grams/CC)
DENSSH = SHELL MATERIAL Density (Grams/CC)
DTUBE = Outside TUBE Diameter - (Cm)
PR = TUBE PITCH RATIO
TTUBE = TUBE Wall Thickness (Cm)
ANPLATES = NUMBER OF SHELL SIDE BAFFLES (ASSUMMED EQUALLY SPACED)
WDOTT = TUBE -SIDE Fluid Flowrate (KG/SEC)
AKTUBE = TUBE Wall Thermal Conductivity (Watts/Cm-K)

HEAT PIPE COOLED MANIFOLD DESCRIPTION

Iflg2 = FLAG TO SET MANIFOLD WORKING FLUID
1 = He-Xe MIXTURE
2 = NaK
Hman = MANIFOLD HEIGHT (Cm)
Gap = MANIFOLD WIDTH (Cm)
Pitch = DISTANCE BETWEEN CAN (HEAT PIPES) CENTERLINES (Cm)
Dcan = OUTSIDE DIAMETER OF MANIFOLD BRAZE CANS (Cm)
Dhp = INSIDE DIAMETER OF HEAT PIPE (Cm)
Rc = MANIFOLD BRAZE CAN INSIDE RADIUS (Cm)
Rb = BRAZE JOINT INSIDE RADIUS (Cm)
Tf = FIN THICKNESS (Cm)
TKfina = THERMAL CONDUCTIVITY OF FIN MATERIAL (Watts/(Cm-K))
TKcan = THERMAL CONDUCTIVITY OF MANIFOLD CAN MATERIAL (")
TKbraze = THERMAL CONDUCTIVITY OF MANIFOLD BRAZE ALLOY (")
TKhp = THERMAL CONDUCTIVITY OF HEAT PIPE WALL MATERIAL (")
XNf = TOTAL NUMBER OF FINS FOR THE MANIFOLD HEIGHT
Xmw = MOLECULAR WEIGTH OF MANIFOLD WORKING FLUID
RHOcan = DENSITY OF MANIFOLD MATERIAL (Grams/CC)
RHObraze = DENSITY OF BRAZE MATERIAL (Grams/CC)
THICKman = MANIFOLD MATERIAL THICKNESS (Cm)
Wman = MANIFOLD FLOWRATE (KG/HR)

NaK PIPING DESCRIPTION

XN9 = NUMBER OF 90 DEGREE ELBOWS OR EQUIVALENT IN DUCT SYSTEM
R9 = AVERAGE RADIUS FOR 90 DEGREE ELBOWS (Cm)
Dp = INSIDE DUCT DIAMETER (Cm)
SUMLEN = TOTAL LENGTH OF DUCT SYSTEM (Cm)
THICKP = DUCT WALL THICKNESS (Cm)
RHOPIP = DUCT WALL DENSITY (Grams/CC)
THICKI = DUCT INSULATION THICKNESS (Cm)
RHOINS = DUCT INSULATION DENSITY (Grams/CC)

If Iprob = 3, then the contents of RADAT are as follows:

IENflg,Halt,HINCL,Rsun
Yrlnch,Time

GAM,ARSF,Earm,PROB
CONFIG,Xntubes,Xnexpip,Xlflat
Dhpipe,Ifluid,Imatl,Theta
D2rad,Thickm,Thickf,Thick
Em,Alpha,Hap,HArad
Tkfin,Rhocoating,Rhofin,RHOarm
Xladiab,Xmchmas

Cman,Hman,Gap,THICKins
RHOins,Tout,Tbraze,TKcan
TKbraze,TKhp,Pin,Tin
Xin,RHOpip,RHOcan,RHObraze
THICKman,Thtpip,Wman

The required parameters are defined as:

ORBIT DESCRIPTION
Halt = ORBIT ALTITUDE (km)
HINCL = ORBIT INCLINATION ANGLE (28.5 TO 80.0 degress, ONLY)
Rsun = DISTANCE FROM SUN (AU)
Yrlnch = YEAR IN WHICH VEHICLE IS PLACED IN ORBIT
Time = MISSION DURATION (Secs)

RADIATOR DESCRIPTION

GAM,ARSF = PENETRATION CONSTANTS - FUNCTIONS OF THE SPECIFIC MATERIAL (SEE Table 3)
Earm = YOUNGS MODULUS OF ARMOR Grams/sq-Cm)
PROB = NON-PUNCTURE PROBABILITY (0.9, 0.99, 0.999, ETC.)
CONFIG = 1.0, THEN RADIATOR IS A FLAT PLATE, ELSE IS A CONE OR CYLINDER
Xntubes = NUMBER OF PRIMARY HEAT PIPE IN RADIATOR
Xnexpip = NUMBER OF REDUNDENT HEAT PIPES
Xlflat = HEAT PIPE EVAPORATOR LENGTH (Cm)
Dhpipe = HEAT PIPE INSIDE DIAMETER (Cm)
Ifluid = HEAT PIPE WORKING FLUID ID NUMBER (SEE Table 2 for recommendations)
Imatl = HEAT PIPE LINER MATERIAL ID NUMBER (SEE Table 2 for recommendations)
Theta = CONE ANGLE FOR CONICAL RADIATOR (DEGREES)
D2rad = MANIFOLD DIAMETER FOR CONICAL RADIATOR OR MANIFOLD
LENGTH DIVIDED BY 3.141593 FOR FLAT PLATE (Cm)
Thickm = RADIATOR EMISSIVITY CONTROL COATING THICKNESS (Cm)
Thickf = RADIATOR FIN THICKNESS (Cm)
Thick = HEAT PIPE WALL or LINER THICKNESS (Cm)
Em = RADIATOR SURFACE EMISSIVITY
Alpha = RADIATOR SURFACE ABSOPTIVITY
Hap = RADIATOR PROJECTED AREA (TOWARD SUN) (FRACTION OF TOTAL)
HArad = RADIATOR ACTUAL AREA (USUALLY = 1.0)
Tkfin = THERMAL CONDUCTIVITY OF FIN MATERIAL (Watts/(Cm-K))
Rhocoating = COATING MATERIAL DENSITY (Grams/CC)
Rhofin = FIN MATERIAL DENSITY (Grams/CC)
RHOarm = ARMOR DENSITY (Grams/CC)
Xladiab = LENGTH OF ADIABATIC PORTION OF THE HEAT PIPE (Cm)
Xmchmas = MASS OF RADIATOR DEPLOYMENT MECHANISM (KG)

CONDENSER/MANIFOLD DESCRIPTION

Cman = MANIFOLD FLAT LENGTH (Cm)
Hman = MANIFOLD HEIGHT (Cm)
Gap = AVERAGE MANIFOLD CONDENSER SURFACE SPACE (Cm)
THICKins = MANIFOLD INSULATION THICKNESS (Cm)
RHOins = MANIFOLD INSULATION DENSITY (Grams/CC)
Tout = MANIFOLD OUTLET TEMPERATURE (K)
Tbraze = MANIFOLD-HEAT PIPE BRAZE MATERIAL THICKNESS (Cm)
TKcan = MANIFOLD WALL MATERIAL THERMAL CONDUCTIVITY (W/CmK)
TKbraze = BRAZE MATERIAL THERMAL CONDUCTIVITY (W/CmK) TKhp = HEAT PIPE WALL MATERIAL THERMAL CONDUCTIVITY (W/CmK)
Pin = MANIFOLD INLET PRESSURE (Grams/sqCm)
Tin = MANIFOLD INLET TEMPERATURE (K)
Xin = MANIFOLD INLET VAPOR FRACTION (QUALITY)
RHOpip = HEAT PIPE WALL MATERIAL DENSITY (Grams/CC)
RHOcan = MANIFOLD WALL MATERIAL DENSITY (Grams/CC)
RHObraze = BRAZE MATERIAL DENSITY (Grams/CC)
THICKman = MANIFOLD WALL MATERIAL THICKNESS (Cm)
Thtpip = HEAT PIPE WALL THICKNESS (Cm)
Wman = MANIFOLD FLOWRATE (KG/Hr)

Sample input files are supplied on the disk that contains the source code for the HREJEC subroutine.

APPENDIX B
SAMPLE CASES

CASE 1: DIRECT COOLED BRAYTON CONFIGURATION - HEAT REJECTION SYSTEM PHYSICAL DATA AVAILABLE

```
*******************************************************************************
CONTENTS OF CALL:   HREJEC(2, 1, 1, 5624.56, 411.1, 388.89. 250.0)
*******************************************************************************

CONTENTS OF DATA FILE 'RADAT'

      1, 1000.0, 30.0, 1.0
      2000.0, 0.315360E+09
      1.7, 1.7, 0.703070E+09, 0.931693
      1.0, 643.810, 64.381, 206.188
      2.54, 2, 8, 0.0
      1821.84, 0.0, 0.127, 0.762E-02
      0.8, 0.5, 1.0, 2.0
      0.849788, 0.0, 1.81009, 1.81009
      0.0, 0.0
      1, 206.188, 17.9933, 8.890
      2.75335, 2.53999, 1.32588, 1.32079
      0.253898E-01, 1.93842, 0.173073, 0.484604
      3.91193, 811.766, 40.0, 8.08932
      8.56988, 0.285537, 21.6435
      12.0, 149.684, 37.4211, 449.053
      0.299369, 8.08932, 10.16, 0.256295

*******************************************************************************

OUTPUT FROM HREJEC

*******************************************************************************


*** HEAT REJECTION SYSTEM FOR A BRAYTON CYCLE SYSTEM IN WHICH CYCLE WASTE HEAT IS REJECTED DIRECTLY FROM THE
CYCLE WORKING FLUID IN A HEAT PIPE COOLED GAS MANIFOLD ***


RADIATOR DEFINITION INPUTS

GAMMA =     1.70000
ARSF =      1.70000
ARMOR DENSITY (Grams/CC) =     1.81009
YOUNGS MODULUS OF ARMOR (Grams/CC) =   0.703070E+09
EXPOSURE TIME OR MISSION DURATION (Secs) =   0.315360E+09
NON-PUNCTURE PROBABILITY =   0.923846
RADIATOR HEAT REJECTION RATE (KWt) =    250.0
AVERAGE RADIATOR SURFACE TEMPERATURE (K) =    399.263
NUMBER OF PRIMARY HEAT PIPE IN RADIATOR =    643.810
NUMBER OF REDUNDENT HEAT PIPES=    64.3810
HEAT PIPE EVAPORATOR LENGTH (Cm)=    206.188
HEAT PIPE INSIDE DIAMETER (Cm)=    2.54000
HEAT PIPE WORKING FLUID ID NUMBER=           2
HEAT PIPE LINER MATERIAL ID NUMBER=           8
CONE ANGLE FOR CONICAL RADIATOR (DEGREES)=   0.000000
MANIFOLD DIAMETER FOR CONICAL RADIATOR OR MANIFOLD LENGTH DIVIDED BY 3.141593 FOR FLAT PLATE (Cm) =
    1821.84
RADIATOR EMISSIVITY CONTROL COATING THICK.(Cm)=   0.000000
RADIATOR FIN THICKNESS (Cm)=   0.127000
HEAT PIPE WALL or LINER THICKNESS (Cm)=   0.762000E-02
RADIATOR SURFACE EMISSIVITY=   0.800000
RADIATOR SURFACE ABSOPTIVITY=   0.500000
RADIATOR PROJ. AREA (FRACT. OF TOT.)=    1.00000
RADIATOR ACTUAL AREA (FRACTION)=    2.00000
THERMAL COND. OF FIN MATERIAL (W/Cm-K) =   0.849773
COATING MATERIAL DENSITY (Grams/CC)=   0.000000
FIN MATERIAL DENSITY (Grams/CC)=    1.81009
LENGTH OF ADIABATIC PORTION OF THE HEAT PIPE (Cm)=   0.000000
MASS OF RADIATOR DEPLOYMENT MECHANISM (KG)=   0.000000
```

TOTAL HEAT REJECTED (KWt)	AVERAGE EVAPORATOR TEMP (K)	Radiator FIN Thick (Cm)	Emissivity Coating Thick (Cm)
250.0000	399.2626	0.1270	0.0000

Actual (one-side) Area(sq-Me.)	Effective Radiator Area(sq-Me)
174.6257	349.2515

HEAT PIPE DESIGN DETAILS - DIMS in Cm

Pipe ID	Wick Thick	#Arteries	Art ID	Art Wall	Pipe wall
2.5400	0.0129	7.6200	0.6452	0.0129	0.0076

Evap Length	Adi Length	Cond Length	Total Length
206.1880	0.0000	305.1339	511.3219

RADIATOR MASS BREAKDOWN - Mass in KG

Heat Pipes	Fluids	FINS	Emiss. Cont.
624.6960	33.7311	315.4453	0.0000

O.D.ARMOR	I.D.ARMOR	Structure	TOTAL RADIATOR
342.0656	342.0656	0.0000	1658.0040

IENflg (ORBIT SELECTION) = 1
IENflg=1, EARTH ORBIT (LEO-GEO)
IENflg=2, SOLAR ORBIT (0.5 to 2.0 AU)
ORBIT ALTITUDE (KM) = 1000.00
ORBIT INCLINATION ANGLE (Degrees) = 30.0000
DISTANCE FROM SUN (AU) = 1.00000
YEAR SATELLITE LAUNCHED = 2000.00

HEAT PIPE COOLED MANIFOLD DEFINITION VARIABLES

Iflg2 = 1
MANIFOLD HEIGHT (Cm)= 206.188
MANIFOLD WIDTH (Cm)= 17.9933
DIST. BETWN CAN(HEAT PIPES)C-LINES (Cm)= 8.89000
NUMBER OF HEAT PIPES IN RADIATOR= 643.810
NUMB. OF REDUNDENT HEAT PIPES IN RADIATOR= 64.3810
OUTSIDE DIAMETER OF BRAZE CANS(Cm)= 2.75335
INSIDE DIAMETER OF HEAT PIPE (Cm)= 2.53999
MANIFOLD BRAZE CAN INSIDE RADIUS (Cm)= 1.32588
BRAZE JOINT INSIDE RADIUS (Cm)= 1.32079
FIN THICKNESS (Cm)= 0.253898E-01
THERM. COND. OF FIN MATERIAL (W/(Cm-K))= 1.93842
THERM. COND. OF MANIFOLD CAN MATERIAL (W/CmK)= 0.173073
THERM. COND. OF MANIF. BRAZE ALLOY (W/CmK)= 0.484604
THERM. COND. OF HEAT PIPE WALL MATL (W/CmK)= 3.91193
TOTAL NUMBER OF FINS FOR THE MANIFOLD HEIGHT= 811.766
DENSITY OF MANIFOLD MATERIAL (Grams/CC)= 8.08932
DENSITY OF BRAZE MATERIAL (Grams/CC)= 8.56988
MANIFOLD MATERIAL THICKNESS (Cm)= 0.285537
MANIFOLD INLET PRESSURE (Grams/sq-Cm) = 5624.56
MANIFOLD INLET TEMPERATURE (K)= 411.100
MANIFOLD FLOWRATE (KG/HR)= 21.6435
MANIFOLD AND RADIATOR HEAT LOAD (KWt)= 250.000
MOLECULAR WEIGTH OF MANIFOLD WORKING FLUID= 40.0000

MANIFOLD PRESSURE DROP (Grams/sq-Cm) = 955.366
MANIFOLD FILM TEMPERATURE DROP (K) = 0.475179
NAK INVENTORY MASS (KG) = 131.482
NET MASS OF HEAT PIPE MANIFOLD (KG) = 6491.51

DUCTING INPUT VARIABLES

NUMB. OF 90 DEG. ELBOWS OR EQUIV.= 12.0000
AVERAGE RADIUS FOR 90 DEGREE ELBOWS (Cm)= 149.684
INSIDE DUCT DIAMETER (Cm)= 37.4211
TOTAL LENGTH OF DUCT SYSTEM (Cm)= 449.053
GAS VELOCITY IN DUCTS (M/SEC)= 30.4785
GAS TEMPERATURE (K)= 411.100
GAS PRESSURE (Grams/sq-Cm)= 5624.56
DUCT WALL THICKNESS (Cm)= 0.299369
DUCT WALL DENSITY (Grams/CC)= 8.08932
DUCT INSULATION THICKNESS (Cm)= 10.1600
DUCT INSULATION DENSITY (Grams/CC)= 0.256288
GAS MOLECULAR WEIGHT= 0.000000
DUCT SYSTEM PRESSURE DROP (Grams/sq-Cm) = 57.9987
DUCT SYSTEM MASS (KG)= 1266.74
MASS SUMMARY FOR DIRECT BRAYTON SYSTEM

HEAT PIPE COOLED GAS MANIFOLD MASS (KG) = 131.482
MANIFOLD DUCTING MASS (KG) = 1266.74
RADIATOR MASS (KG) = 1658.00

DIRECT BRAYTON SYSTEM MASS (KG) = 3056.23

CASE 2: LIQUID LOOP COOLED BRAYTON CONFIGURATION - HEAT REJECTION SYSTEM PHYSICAL DATA AVAILABLE

****

CONTENTS OF CALL: HREJEC(2, 2, 1, 5624.56, 466.7, 444.45, 250.0)

****

CONTENTS OF DATA FILE 'RADAT'

```
1, 1000.0, 30.0, 1.0
2000.0, 0.315360E+09
1.7, 1.7, 0.703070E+09, 0.944048
1.0, 259.676, 25.9676, 45.720
2.54, 2, 8, 0.0
734.826, 0.0, 0.127, 0.762E-02
0.8, 0.5, 1.0, 2.0
0.849788, 0.0, 1.81009, 1.81009
0.0, 0.0
2, 10.1950, 416.672, 450.033
21.6045, 40.0, 10.16, 24.0
8.08932, 0.9525, 1.30, 0.5080E-01
5.0, 8.16972, 0.173073
2, 36.1541, 15.240, 8.89
2.75335, 2.53999, 1.32588, 1.32079
0.253898E-01, 1.93842, 0.173073, 0.484604
3.91193, 180.0, 40.0, 8.08932
8.56988, 0.285537, 8.16972
12.00, 14.8324, 3.70810, 762.0
0.254, 8.08932, 10.16, 0.384443
```

****

OUTPUT FROM HREJEC

****

*** HEAT REJECTION SYSTEM FOR A BRAYTON CYCLE SYSTEM IN WHICH CYCLE WASTE HEAT IS REJECTED TO A PUMPED NaK LOOP FROM THE CYCLE WORKING FLUID TO A HEAT PIPE COOLED LIQUID MANIFOLD ***

RADIATOR DEFINITION INPUTS

```
GAMMA =     1.70000
ARSF =      1.70000
ARMOR DENSITY (Grams/CC) =     1.81009
YOUNGS MODULUS OF ARMOR (Grams/CC) =    0.703070E+09
EXPOSURE TIME OR MISSION DURATION (Secs) =    0.315360E+09
NON-PUNCTURE PROBABILITY =    0.934292
RADIATOR HEAT REJECTION RATE (KWt) =     250.0
AVERAGE RADIATOR SURFACE TEMPERATURE (K) =     419.225
NUMBER OF PRIMARY HEAT PIPE IN RADIATOR =     259.676
NUMBER OF REDUNDENT HEAT PIPES=     25.9676
HEAT PIPE EVAPORATOR LENGTH (Cm)=     45.7200
HEAT PIPE INSIDE DIAMETER (Cm)=     2.54000
HEAT PIPE WORKING FLUID ID NUMBER=            2
HEAT PIPE LINER MATERIAL ID NUMBER=            8
CONE ANGLE FOR CONICAL RADIATOR (DEGREES)=    0.000000
MANIFOLD DIAMETER FOR CONICAL RADIATOR OR MANIFOLD LENGTH DIVIDED BY 3.141593 FOR FLAT PLATE (Cm) =
    734.826
RADIATOR EMISSIVITY CONTROL COATING THICK.(Cm)=    0.000000
RADIATOR FIN THICKNESS (Cm)=    0.127000
HEAT PIPE WALL or LINER THICKNESS (Cm)=    0.762000E-02
RADIATOR SURFACE EMISSIVITY=    0.800000
RADIATOR SURFACE ABSOPTIVITY=    0.500000
RADIATOR PROJ. AREA (FRACT. OF TOT.)=     1.00000
RADIATOR ACTUAL AREA (FRACTION)=     2.00000
THERMAL COND. OF FIN MATERIAL (W/Cm-K) =    0.849773
COATING MATERIAL DENSITY (Grams/CC)=    0.000000
FIN MATERIAL DENSITY (Grams/CC)=     1.81009
LENGTH OF ADIABATIC PORTION OF THE HEAT PIPE (Cm)=    0.000000
MASS OF RADIATOR DEPLOYMENT MECHANISM (KG)=    0.000000
```

TOTAL HEAT REJECTED (KWt)	AVERAGE EVAPORATOR TEMP (K)	Radiator FIN Thick (Cm)	Emissivity Coating Thick (Cm)
250.0000	419.2248	0.1270	0.0000

Actual (one-side) Area(sq-Me.)	Effective Radiator Area(sq-Me)
130.8736	261.7472

HEAT PIPE DESIGN DETAILS - DIMS in Cm

Pipe ID	Wick Thick	#Arteries	Art ID	Art Wall	Pipe wall
2.5400	0.0129	7.6200	0.6452	0.0129	0.0076

Evap Length	Adi Length	Cond Length	Total Length
45.7200	0.0000	566.9699	612.6899

RADIATOR MASS BREAKDOWN - Mass in KG

Heat Pipes	Fluids	FINS	Emiss. Cont.
301.8325	16.2465	236.4111	0.0000

O.D.ARMOR	I.D.ARMOR	Structure	TOTAL RADIATOR
350.6339	350.6339	0.0000	1255.7580

IENflg (ORBIT SELECTION) = 1
IENflg=1, EARTH ORBIT (LEO-GEO)
IENflg=2, SOLAR ORBIT (0.5 to 2.0 AU)
ORBIT ALTITUDE (KM) = 1000.00
ORBIT INCLINATION ANGLE (Degrees) = 30.0000
DISTANCE FROM SUN (AU) = 1.00000
YEAR SATELLITE LAUNCHED = 2000.00

HEAT PIPE COOLED MANIFOLD DEFINITION VARIABLES

Iflg2 = 2
MANIFOLD HEIGHT (Cm)= 36.1541
MANIFOLD WIDTH (Cm)= 15.2400
DIST. BETWN CAN(HEAT PIPES)C-LINES (Cm)= 8.89000
NUMBER OF HEAT PIPES IN RADIATOR= 259.676
NUMB. OF REDUNDENT HEAT PIPES IN RADIATOR= 25.9676
OUTSIDE DIAMETER OF BRAZE CANS(Cm)= 2.75335
INSIDE DIAMETER OF HEAT PIPE (Cm)= 2.53999
MANIFOLD BRAZE CAN INSIDE RADIUS (Cm)= 1.32588
BRAZE JOINT INSIDE RADIUS (Cm)= 1.32079
FIN THICKNESS (Cm)= 0.253898E-01
THERM. COND. OF FIN MATERIAL (W/(Cm-K))= 1.93842
THERM. COND. OF MANIFOLD CAN MATERIAL (W/CmK)= 0.173073
THERM. COND. OF MANIF. BRAZE ALLOY (W/CmK)= 0.484604
THERM. COND. OF HEAT PIPE WALL MATL (W/CmK)= 3.91193
TOTAL NUMBER OF FINS FOR THE MANIFOLD HEIGHT= 180.000
DENSITY OF MANIFOLD MATERIAL (Grams/CC)= 8.08932
DENSITY OF BRAZE MATERIAL (Grams/CC)= 8.56988
MANIFOLD MATERIAL THICKNESS (Cm)= 0.285537
MANIFOLD INLET PRESSURE (Grams/sq-Cm) = 5624.56
MANIFOLD INLET TEMPERATURE (K)= 466.700
MANIFOLD FLOWRATE (KG/HR)= 8.16972
MANIFOLD AND RADIATOR HEAT LOAD (KWt)= 250.000
MOLECULAR WEIGTH OF MANIFOLD WORKING FLUID= 40.0000

MANIFOLD PRESSURE DROP (Grams/sq-Cm) = 27.7819
MANIFOLD FILM TEMPERATURE DROP (K) = 36.1043
NAK INVENTORY MASS (KG) = 1001.46
NET MASS OF HEAT PIPE MANIFOLD (KG) = 585.325

PIPING DEFINITION VARIABLES

NUMB. OF 90 DEG. ELBOWS OR EQUIV.= 12.0000
AVERAGE RADIUS FOR 90 DEGREE ELBOWS (Cm)= 14.8324
INSIDE PIPE DIAMETER (Cm)= 3.70810
TOTAL LENGTH OF PIPE SYSTEM (Cm)= 762.000
NAK VELOCITY IN PIPES (M/SEC)= 9.14358
NAK TEMPERATURE (K)= 466.700
NAK PRESSURE (Grams/sq-Cm)= 5624.56
PIPE WALL THICKNESS (Cm)= 0.254000
PIPE WALL DENSITY (Grams/CC)= 8.08932
PIPE INSULATION THICKNESS (Cm)= 10.1600
PIPE INSULATION DENSITY (Grams/CC)= 0.384444
PIPE SYSTEM PRESSURE DROP (Grams/sq-Cm)= 1696.15
PIPE SYSTEM MASS (KG)= 210.384
PIPE SYSTEM NaK MASS (KG) = 9.30602

HEAT SOURCE/SINK HEAT EXCHANGER DEFINITION

TUBE SIDE FLUID FLAG = 2
Heat Rate or Duty (KWt) = 250.000
HOT SIDE Inlet Temperature (K)= 466.700
HOT SIDE Outlet Temperature (K)= 444.450
COLD SIDE Inlet Temperature (K)= 416.672
COLD SIDE Outlet Temperature (K)= 450.033
SHELL SIDE FLUID Flowrate (KG/Hr)= 21.6045
SHELL MATERIAL Density (Grams/CC)= 8.08934
INSIDE TUBE Diameter (Cm)= 0.952500
TUBE Wall Thickness (Cm)= 0.508000E-01
TUBE -SIDE Fluid Flowrate (KG/Sec)= 8.16972
TUBE Wall Thermal Conductivity(W/(Cm-K))= 0.173073
SHELLSIDE DP (Grams/sq-Cm) = 620.628
SHELLSIDE H (W/sqCm-K)= 21.5384
FRIC-FAC = 0.265247
UNEW (W/sqCm-K) = 10.2137
NUMBER OF TUBES IN BUNDLE = 81.0937
Tube Side Reynolds Number = 46448.2
Tube Side Press. Drop(Grams/sq-Cm)= 79.1445
Tube Side Hg (W/sqCm-K) = 38.0459
TUBE WALL THICKNESS (Cm) = 0.508000E-01
DOTL2 (Cm) = 13.5268
LENGTH (Cm) = 81.2082

INSULATION MASS (KG) = 17.9806
HEAD MASS (KG) = 0.348627
SHELL MASS (KG) = 2.44039
PLATE MASS (KG) = 0.128417
TUBE SHEETS MASS (KG) = 0.348627
TUBE MASS (KG) = 7.66617
STRUCTURE AND BRACKETS MASS (KG) = 1.44564
MASS OF NaK IN H-X (KG) = 4.99176
Net Mass of Shell and Tube Unit(DRY)(KG)= 30.3585

NaK PUMP DEFINITION

NAK INLET TEMPERATURE (K)= 466.700
NAK FLOWRATE (KG/SEC)= 8.16972
PIPING SYSTEM PRESSURE DROP (G/SC)= 1696.15
NAK SIDE HEAT EXCHANGER PRESSURE DROP (G/SC)= 79.1445
NAK MANIFOLD PRESSURE DROP (G/SC)= 27.7819
NaK LOOP PRESSURE DROP (G/SC) = 1803.08
NaK LOOP PUMP POWER REQUIRED (HYDRAULIC) (WATTS) = 1738.59
E-M PUMP MASS (DRY) (KG) = 271.508

```
NAK LOOP EXPANSION COMPENSATOR DEFINED

VOLUME ACCUMULATOR Nak MASS (KG) =    53.7542
VOLUME ACCUMULATOR MASS (WET) (KG) =    110.184
MASS SUMMARY FOR INDIRECT BRAYTON SYSTEM

HEAT SINK HEAT EXCHANGER MASS (KG)(DRY)=    30.3585
HEAT EXCHANGER NaK MASS (KG) =    4.99176
NaK PIPING SYSTEM MASS (KG)(DRY) =    210.384
MASS OF NaK IN PIPING SYSTEM (KG) =    9.30602
MASS OF EM PUMP (KG) (WET) =    271.508
HEAT PIPE/NaK MANIFOLD MASS (KG) (DRY) =    585.325
MASS OF NaK IN MANIFOLD (KG) =    1001.46
EXPANSION COMPENSATOR MASS (KG) (DRY) =    110.184
MASS OF NaK IN EXPANSION COMPENSATOR(KG)=    53.7542
RADIATOR MASS (KG) =    1255.76

INDIRECT BRAYTON SYSTEM MASS (KG) (WET) =    3533.03
```

CASE 3: SHEAR FLOW CONDENSER IN A POTASSIUM RANKINE CYCLE - HEAT REJECTION SYSTEM PHYSICAL DATA AVAILABLE

****

CONTENTS OF CALL: HREJEC(2, 3, 1, 140.64, 855.56, 850.00, 250.0)

****

CONTENTS OF DATA FILE 'RADAT'

```
1, 1000.0, 30.0, 1.0
2000.0, 0.315360E+09
1.7, 1.7, 0.703070E+09, 0.970672
1.0, 41.3705, 4.13705, 43.2394
2.54, 5, 7, 0.0
66.8968, 0.0, 0.127, 0.762E-02
0.8, 0.5, 1.0, 2.0
0.849788, 0.0, 1.81009, 1.81009
0.0, 0.0
210.162, 43.2394, 1.05984, 10.16
0.0, 850.0, 0.508E-02, 0.173073
0.605756, 0.173073, 140.614, 855.560
1.0, 8.08932, 8.08932, 8.40969
0.158750, 0.508E-01, 442.892
```

****

OUTPUT FROM HREJEC

****

*** HEAT REJECTION SYSTEM FOR A RANKINE CYCLE SYSTEM IN WHICH CYCLE WASTE HEAT IS REJECTED DIRECTLY FROM THE CYCLE WORKING FLUID IN A HEAT PIPE COOLED CONDENSER ***

RADIATOR DEFINITION INPUTS

```
GAMMA =     1.70000
ARSF =      1.70000
ARMOR DENSITY (Grams/CC) =     1.81009
YOUNGS MODULUS OF ARMOR (Grams/CC) =    0.703070E+09
EXPOSURE TIME OR MISSION DURATION (Secs) =    0.315360E+09
NON-PUNCTURE PROBABILITY =    0.961311
RADIATOR HEAT REJECTION RATE (KWt) =     250.0
AVERAGE RADIATOR SURFACE TEMPERATURE (K) =     827.144
NUMBER OF PRIMARY HEAT PIPE IN RADIATOR =     41.3705
NUMBER OF REDUNDENT HEAT PIPES=     4.13705
HEAT PIPE EVAPORATOR LENGTH (Cm)=     43.2394
HEAT PIPE INSIDE DIAMETER (Cm)=     2.54000
HEAT PIPE WORKING FLUID ID NUMBER=            5
HEAT PIPE LINER MATERIAL ID NUMBER=            7
CONE ANGLE FOR CONICAL RADIATOR (DEGREES)=    0.000000
MANIFOLD DIAMETER FOR CONICAL RADIATOR OR MANIFOLD LENGTH DIVIDED BY 3.141593 FOR FLAT PLATE (Cm) =
    66.8968
RADIATOR EMISSIVITY CONTROL COATING THICK.(Cm)=    0.000000
RADIATOR FIN THICKNESS (Cm)=    0.127000
HEAT PIPE WALL or LINER THICKNESS (Cm)=    0.762000E-02
RADIATOR SURFACE EMISSIVITY=    0.800000
RADIATOR SURFACE ABSOPTIVITY=    0.500000
RADIATOR PROJ. AREA (FRACT. OF TOT.)=     1.00000
RADIATOR ACTUAL AREA (FRACTION)=     2.00000
THERMAL COND. OF FIN MATERIAL (W/Cm-K) =    0.849773
COATING MATERIAL DENSITY (Grams/CC)=    0.000000
FIN MATERIAL DENSITY (Grams/CC)=     1.81009
LENGTH OF ADIABATIC PORTION OF THE HEAT PIPE (Cm)=    0.000000
MASS OF RADIATOR DEPLOYMENT MECHANISM (KG)=    0.000000
```

TOTAL HEAT REJECTED (KWt)	AVERAGE EVAPORATOR TEMP (K)	Radiator FIN Thick (Cm)	Emissivity Coating Thick (Cm)
250.0000	827.1442	0.1270	0.0000

Actual (one-side) Area(sq-Me.)	Effective Radiator Area(sq-Me)
6.7057	13.4114

HEAT PIPE DESIGN DETAILS - DIMS in Cm

Pipe ID	Wick Thick	#Arteries	Art ID	Art Wall	Pipe wall
2.5400	0.0129	7.6200	0.6452	0.0129	0.0076

Evap Length	Adi Length	Cond Length	Total Length
43.2394	0.0000	319.1042	362.3436

RADIATOR MASS BREAKDOWN - Mass in KG

Heat Pipes	Fluids	FINS	Emiss. Cont.
26.6852	1.3352	8.4793	0.0000

O.D.ARMOR	I.D.ARMOR	Structure	TOTAL RADIATOR
34.6265	34.6265	0.0000	105.7527

IENflg (ORBIT SELECTION) = 1
IENflg=1, EARTH ORBIT (LEO-GEO)
IENflg=2, SOLAR ORBIT (0.5 to 2.0 AU)
ORBIT ALTITUDE (KM) = 1000.00
ORBIT INCLINATION ANGLE (Degrees) = 30.0000
DISTANCE FROM SUN (AU) = 1.00000
YEAR SATELLITE LAUNCHED = 2000.00

HEAT PIPE COOLED CONDENSER DESCRIPTION

MANIFOLD FLAT LENGTH (Cm) = 210.162
MANIFOLD HEIGHT (Cm) = 43.2394
AVERAGE MANIFOLD COND.SURF.SPACE(Gap)(Cm)= 1.05984
MANIFOLD INSULATION THICKNESS (Cm) = 10.1600
MANIFOLD INSULATION DENSITY (Grams/CC) = 0.000000
NUMBER OF PRIMARY HEAT PIPES ATTACHED TO COOL CONDENSER SURFACE = 41.3705
NUMBER OF REDUNDENT HEAT PIPES USED TO COOL CONDENSER SURFACE = 4.13705
MANIFOLD WALL MATERIAL THICKNESS(Cm)= 0.158750
MANIFOLD-HEAT PIPE BRAZE MATERIAL THICKNESS (Cm) = 0.508000E-02
HEAT PIPE WALL THICKNESS (Cm) = 0.508000E-01
MANIFOLD WALL MAT. THERMAL COND. (W/CmK) = 0.173073
BRAZE MAT. THERMAL COND. (W/CmK) = 0.605756
HEAT PIPE WALL MAT. THERMAL COND. (W/CmK) = 0.173073
MANIFOLD WALL MATERIAL DENSITY (Grams/CC)= 8.08932
BRAZE MATERIAL DENSITY (Grams/CC) = 8.40969
HEAT PIPE WALL MATERIAL DENSITY(Grams/CC)= 8.08932
HEAT PIPE WORKING FLUID NUMBER = 5

MANIFOLD OPERATING CONDITIONS

INLET PRESSURE (G/SC) = 140.614
INLET TEMPERATURE (K) = 855.559
MEAN CONDENSER QUALITY = 1.00000
OUTLET TEMPERATURE (K) = 849.999
MANIFOLD FLOWREATE (KG/Hr) = 442.541
MANIFOLD DUTY (KWt) = 250.000

COMPUTED RESULTS

MANIFOLD PRESSURE DROP (G/SC) = 6.96161
MANIFOLD FILM TEMPERATURE DROP (K) = 25.6274
CONDENSER CONDENSATE FLOW REGIME PARAMETER = 0.127759
CONDENSER IS OPERATING IN SHEAR FLOW REGIME

CONDENSATE FILM REYNOLDS NUMBER = 1901.94
MARTINELLI PARAMETER = 0.133079E-01
VAPOR REYNOLDS NUMBER = 3803.88
MANIFOLD MASS (KG) = 39.6255
MASS SUMMARY FOR CONDENSING RANKINE SYSTEM

HEAT PIPE COOLED CONDENSER MASS (KG) = 39.6255
RADIATOR MASS (KG) = 105.753

CONDENSING RANKINE SYSTEM MASS (KG) = 145.378

CASE 4: DIRECT COOLED BRAYTON CONFIGURATION - NO HEAT REJECTION SYSTEM PHYSICAL DATA AVAILABLE

```
*******************************************************************************
CONTENTS OF CALL:   HREJEC(1, 1, 1, 5624.56, 411.1, 388.89. 250.0)
*******************************************************************************
```

CONTENTS OF DATA FILE 'RADAT'

```
      0, 0.0, 0.0, 0.0
      0.0, 0.0
      5624.56, 411.1, 40.0, 388.89
      250.0
```

```
*******************************************************************************
```

OUTPUT FROM HREJEC

```
*******************************************************************************
```

THE SIMPLIFIED DATA INPUT OPTION HAS BEEN SELECTED

*** HEAT REJECTION SYSTEM FOR A BRAYTON CYCLE SYSTEM IN WHICH CYCLE WASTE HEAT IS REJECTED DIRECTLY FROM THE CYCLE WORKING FLUID IN A HEAT PIPE COOLED GAS MANIFOLD ***

INPUT FOR OPTION NUMBER 1

INPUT FOLLOWING DATA INTO FILE *RADAT* TO RUN OPT #1

```
           1    1000.00        30.0000        1.00000
    2000.00       0.315360E+09

    1.70000        1.70000       0.703070E+09   0.990000
    1.00000        643.810        64.3810        206.188
    2.54000                2            8   0.000000
    1821.84       0.000000       0.127000       0.762000E-02
   0.800000       0.500000        1.00000        2.00000
   0.849788       0.000000        1.81009        1.81009
   0.000000       0.000000

           1    206.188        17.9933        8.89000
    2.75335        2.53999        1.32588        1.32079
   0.253898E-01    1.93842       0.173073       0.484604
    3.91193        811.766        40.0000        8.08932
    8.56988       0.158750        21.6435

    12.0000        149.684        37.4211        449.053
   0.299369        8.08932        10.1600       0.256295

C     IENflg,Halt,HINCL,Rsun
C     Yrlnch,Time

C     GAM,ARSF,Earm,PROB
C     CONFIG,Xntubes,Xnexpip,Xlflat
C     Dhpipe,Ifluid,Imatl,Theta
C     D2rad,Thickm,Thickf,Thick
C     Em,Alpha,Hap,HArad
C     Tkfin,Rhocoating,Rhofin,RHOarm
C     Xladiab,Xmchmas

C     Iflg2,Hman,Gap,Pitch
C     Dcan,Dhp,Rc,Rb
C     Tf,TKfina,TKcan,TKbraze
C     TKhp,XNf,Xmw,RHOcan
C     RHObraze,THICKman,Wman

C     XN9,R9,Dp,SUMLEN
C     THICKP,RHOPIP,THICKI,RHOINS
```

RADIATOR DEFINITION INPUTS

GAMMA = 1.70000
ARSF = 1.70000
ARMOR DENSITY (Grams/CC) = 1.81009
YOUNGS MODULUS OF ARMOR (Grams/CC) = 0.703070E+09
EXPOSURE TIME OR MISSION DURATION (Secs) = 0.315360E+09
NON-PUNCTURE PROBABILITY = 0.931693
RADIATOR HEAT REJECTION RATE (KWt) = 250.
AVERAGE RADIATOR SURFACE TEMPERATURE (K) = 399.262
NUMBER OF PRIMARY HEAT PIPE IN RADIATOR = 643.810
NUMBER OF REDUNDENT HEAT PIPES= 64.3810
HEAT PIPE EVAPORATOR LENGTH (Cm)= 206.188
HEAT PIPE INSIDE DIAMETER (Cm)= 2.54000
HEAT PIPE WORKING FLUID ID NUMBER= 2
HEAT PIPE LINER MATERIAL ID NUMBER= 8
CONE ANGLE FOR CONICAL RADIATOR (DEGREES)= 0.000000
MANIFOLD DIAMETER FOR CONICAL RADIATOR OR MANIFOLD LENGTH DIVIDED BY 3.141593 FOR FLAT PLATE (Cm) =
1821.84
RADIATOR EMISSIVITY CONTROL COATING THICK.(Cm)= 0.000000
RADIATOR FIN THICKNESS (Cm)= 0.127000
HEAT PIPE WALL or LINER THICKNESS (Cm)= 0.762000E-02
RADIATOR SURFACE EMISSIVITY= 0.800000
RADIATOR SURFACE ABSOPTIVITY= 0.500000
RADIATOR PROJ. AREA (FRACT. OF TOT.)= 1.00000
RADIATOR ACTUAL AREA (FRACTION)= 2.00000
THERMAL COND. OF FIN MATERIAL (W/Cm-K) = 0.849774
COATING MATERIAL DENSITY (Grams/CC)= 0.000000
FIN MATERIAL DENSITY (Grams/CC)= 1.81009
LENGTH OF ADIABATIC PORTION OF THE HEAT PIPE (Cm)= 0.000000
MASS OF RADIATOR DEPLOYMENT MECHANISM (KG)= 0.000000

TOTAL HEAT REJECTED (KWt)	AVERAGE EVAPORATOR TEMP (K)	Radiator FIN Thick (Cm)	Emissivity Coating Thick (Cm)
250.0000	399.2623	0.1270	0.0000

Actual (one-side) Area(sq-Me.)	Effective Radiator Area(sq-Me)
174.6265	349.2531

HEAT PIPE DESIGN DETAILS - DIMS in Cm

Pipe ID	Wick Thick	#Arteries	Art ID	Art Wall	Pipe wall
2.5400	0.0129	7.6200	0.6452	0.0129	0.0076

Evap Length	Adi Length	Cond Length	Total Length
206.1884	0.0000	305.1358	511.3242

RADIATOR MASS BREAKDOWN - Mass in KG

Heat Pipes	Fluids	FINS	Emiss. Cont.
624.6988	33.7312	315.4457	0.0000

O.D.ARMOR	I.D.ARMOR	Structure	TOTAL RADIATOR
357.6603	357.6603	0.0000	1689.1960

IENflg (ORBIT SELECTION) = 1
IENflg=1, EARTH ORBIT (LEO-GEO)
IENflg=2, SOLAR ORBIT (0.5 to 2.0 AU)
ORBIT ALTITUDE (KM) = 1000.00
ORBIT INCLINATION ANGLE (Degrees) = 30.0000
DISTANCE FROM SUN (AU) = 1.00000
YEAR SATELLITE LAUNCHED = 2000.00

HEAT PIPE COOLED MANIFOLD DEFINITION VARIABLES

```
Iflg2 =          1
MANIFOLD HEIGHT (Cm)=    206.188
MANIFOLD WIDTH (Cm)=    17.9933
DIST. BETWN CAN(HEAT PIPES)C-LINES (Cm)=    8.89000
NUMBER OF HEAT PIPES IN RADIATOR=    643.810
NUMB. OF REDUNDENT HEAT PIPES IN RADIATOR=    64.3810
OUTSIDE DIAMETER OF BRAZE CANS(Cm)=    2.75335
INSIDE DIAMETER OF HEAT PIPE (Cm)=    2.53999
MANIFOLD BRAZE CAN INSIDE RADIUS (Cm)=    1.32588
BRAZE JOINT INSIDE RADIUS (Cm)=    1.32079
FIN THICKNESS (Cm)=   0.253898E-01
THERM. COND. OF FIN MATERIAL (W/(Cm-K))=    1.93842
THERM. COND. OF MANIFOLD CAN MATERIAL (W/CmK)=   0.173073
THERM. COND. OF MANIF. BRAZE ALLOY (W/CmK)=   0.484604
THERM. COND. OF HEAT PIPE WALL MATL (W/CmK)=    3.91193
TOTAL NUMBER OF FINS FOR THE MANIFOLD HEIGHT=    811.766
DENSITY OF MANIFOLD MATERIAL (Grams/CC)=    8.08932
DENSITY OF BRAZE MATERIAL (Grams/CC)=    8.56988
MANIFOLD MATERIAL THICKNESS (Cm)=   0.158750
MANIFOLD INLET PRESSURE (Grams/sq-Cm) =    5624.56
MANIFOLD INLET TEMPERATURE (K)=    411.100
MANIFOLD FLOWRATE (KG/HR)=    21.6435
MANIFOLD AND RADIATOR HEAT LOAD (KWt)=    250.000
MOLECULAR WEIGTH OF MANIFOLD WORKING FLUID=    40.0000

MANIFOLD PRESSURE DROP (Grams/sq-Cm) =    955.353
MANIFOLD FILM TEMPERATURE DROP (K) =   0.475178
NAK INVENTORY MASS (KG) =    131.483
NET MASS OF HEAT PIPE MANIFOLD (KG) =    3863.87
```

DUCTING INPUT VARIABLES

```
NUMB. OF 90 DEG. ELBOWS OR EQUIV.=    12.0000
AVERAGE RADIUS FOR 90 DEGREE ELBOWS (Cm)=    149.684
INSIDE DUCT DIAMETER (Cm)=    37.4211
TOTAL LENGTH OF DUCT SYSTEM (Cm)=    449.053
GAS VELOCITY IN DUCTS (M/SEC)=    30.4785
GAS TEMPERATURE (K)=    411.100
GAS PRESSURE (Grams/sq-Cm)=    5624.56
DUCT WALL THICKNESS (Cm)=   0.299369
DUCT WALL DENSITY (Grams/CC)=    8.08932
DUCT INSULATION THICKNESS (Cm)=    10.1600
DUCT INSULATION DENSITY (Grams/CC)=   0.256288
GAS MOLECULAR WEIGHT=   0.000000
DUCT SYSTEM PRESSURE DROP (Grams/sq-Cm) =    57.9988
DUCT SYSTEM MASS (KG)=    1266.75
MASS SUMMARY FOR DIRECT BRAYTON SYSTEM

HEAT PIPE COOLED GAS MANIFOLD MASS (KG) =    131.483
MANIFOLD DUCTING MASS (KG) =    1266.75
RADIATOR MASS (KG) =    1689.20

DIRECT BRAYTON SYSTEM MASS (KG) =    3087.43
```

```
CASE 5: LIQUID LOOP COOLED BRAYTON CONFIGURATION - NO HEAT REJECTION SYSTEM PHYSICAL DATA AVAILABLE
*******************************************************************************
CONTENTS OF CALL:   HREJEC(1, 2, 1, 5624.56, 466.7, 444.45, 250.0)
*******************************************************************************
CONTENTS OF DATA FILE 'RADAT'
      0, 0.0, 0.0, 0.0
      0.0, 0.0
      5624.56, 466.7, 40.0, 444.45
      250.0
*******************************************************************************
OUTPUT FROM HREJEC
*******************************************************************************
THE SIMPLIFIED DATA INPUT OPTION HAS BEEN SELECTED

*** HEAT REJECTION SYSTEM FOR A BRAYTON CYCLE SYSTEM IN WHICH CYCLE WASTE HEAT IS REJECTED TO A PUMPED NaK LOOP
FROM THE CYCLE WORKING FLUID TO A HEAT PIPE COOLED NaK MANIFOLD ***

INPUT FOR OPTION NUMBER 2

INPUT FOLLOWING DATA INTO FILE *RADAT* TO RUN OPT #2

           1    1000.00        30.0000        1.00000
    2000.00       0.315360E+09

    1.70000        1.70000       0.703070E+09   0.990000
    1.00000        259.676        25.9676        45.7200
    2.54000              2            8   0.000000
    734.826       0.000000       0.127000       0.762000E-02
   0.800000       0.500000        1.00000        2.00000
   0.849788       0.000000        1.81009        1.81009
   0.000000       0.000000

           2    10.1950        416.672        450.033
    21.6045        40.0000        10.1600        24.0000
    8.08932       0.952500        1.30000       0.508000E-01
    5.00000        8.16972       0.173073

           2    36.1541        15.2400        8.89000
    2.75335        2.53999        1.32588        1.32079
   0.253898E-01    1.93842       0.173073       0.484604
    3.91193        180.000        40.0000        8.08932
    8.56988       0.158750        8.16972

    12.0000        14.8324        3.70810        762.000
   0.254000        8.08932        10.1600       0.384443

C     IENflg,Halt,HINCL,Rsun
C     Yrlnch,Time

C     GAM,ARSF,Earm,PROB
C     CONFIG,Xntubes,Xnexpip,Xlflat
C     Dhpipe,Ifluid,Imatl,Theta
C     D2rad,Thickm,Thickf,Thick
C     Em,Alpha,Hap,HArad
C     Tkfin,Rhocoating,Rhofin,RHOarm
C     Xladiab,Xmchmas

C     IHXflg,UEST,TCIN,TCOUT
C     WDOTS,AMWS,TINS,DENINS
C     DENSSH,DTUBE,PR,TTUBE
C     ANPLATES,WDOTT,AKTUBE

C     Iflg2,Hman,Gap,Pitch
C     Dcan,Dhp,Rc,Rb
C     Tf,TKfina,TKcan,TKbraze
C     TKhp,XNf,Xmw,RHOcan
C     RHObraze,THICKman,Wman

C     XN9,R9,Dp,SUMLEN
C     THICKP,RHOPIP,THICKI,RHOINS
```

RADIATOR DEFINITION INPUTS

GAMMA = 1.70000
ARSF = 1.70000
ARMOR DENSITY (Grams/CC) = 1.81009
YOUNGS MODULUS OF ARMOR (Grams/CC) = 0.703070E+09
EXPOSURE TIME OR MISSION DURATION (Secs) = 0.315360E+09
NON-PUNCTURE PROBABILITY = 0.944048
RADIATOR HEAT REJECTION RATE (KWt) = 250.
AVERAGE RADIATOR SURFACE TEMPERATURE (K) = 419.224
NUMBER OF PRIMARY HEAT PIPE IN RADIATOR = 259.676
NUMBER OF REDUNDENT HEAT PIPES= 25.9676
HEAT PIPE EVAPORATOR LENGTH (Cm)= 45.7200
HEAT PIPE INSIDE DIAMETER (Cm)= 2.54000
HEAT PIPE WORKING FLUID ID NUMBER= 2
HEAT PIPE LINER MATERIAL ID NUMBER= 8
CONE ANGLE FOR CONICAL RADIATOR (DEGREES)= 0.000000
MANIFOLD DIAMETER FOR CONICAL RADIATOR OR MANIFOLD LENGTH DIVIDED BY 3.141593 FOR FLAT PLATE (Cm) =
734.826
RADIATOR EMISSIVITY CONTROL COATING THICK.(Cm)= 0.000000
RADIATOR FIN THICKNESS (Cm)= 0.127000
HEAT PIPE WALL or LINER THICKNESS (Cm)= 0.762000E-02
RADIATOR SURFACE EMISSIVITY= 0.800000
RADIATOR SURFACE ABSOPTIVITY= 0.500000
RADIATOR PROJ. AREA (FRACT. OF TOT.)= 1.00000
RADIATOR ACTUAL AREA (FRACTION)= 2.00000
THERMAL COND. OF FIN MATERIAL (W/Cm-K) = 0.849774
COATING MATERIAL DENSITY (Grams/CC)= 0.000000
FIN MATERIAL DENSITY (Grams/CC)= 1.81009
LENGTH OF ADIABATIC PORTION OF THE HEAT PIPE (Cm)= 0.000000
MASS OF RADIATOR DEPLOYMENT MECHANISM (KG)= 0.000000

TOTAL HEAT REJECTED (KWt)	AVERAGE EVAPORATOR TEMP (K)	Radiator FIN Thick (Cm)	Emissivity Coating Thick (Cm)
250.0000	419.2245	0.1270	0.0000

Actual (one-side) Area(sq-Me.)	Effective Radiator Area(sq-Me)
130.8741	261.7481

HEAT PIPE DESIGN DETAILS - DIMS in Cm

Pipe ID	Wick Thick	#Arteries	Art ID	Art Wall	Pipe wall
2.5400	0.0129	7.6200	0.6452	0.0129	0.0076

Evap Length	Adi Length	Cond Length	Total Length
45.7200	0.0000	566.9722	612.6923

RADIATOR MASS BREAKDOWN - Mass in KG

Heat Pipes	Fluids	FINS	Emiss. Cont.
301.8342	16.2466	236.4112	0.0000

O.D.ARMOR	I.D.ARMOR	Structure	TOTAL RADIATOR
374.3636	374.3636	0.0000	1303.2190

IENflg (ORBIT SELECTION) = 1
IENflg=1, EARTH ORBIT (LEO-GEO)
IENflg=2, SOLAR ORBIT (0.5 to 2.0 AU)
ORBIT ALTITUDE (KM) = 1000.00
ORBIT INCLINATION ANGLE (Degrees) = 30.0000
DISTANCE FROM SUN (AU) = 1.00000
YEAR SATELLITE LAUNCHED = 2000.00

HEAT PIPE COOLED MANIFOLD DEFINITION VARIABLES

```
Iflg2 =            2
MANIFOLD HEIGHT (Cm)=    36.1541
MANIFOLD WIDTH (Cm)=    15.2400
DIST. BETWN CAN(HEAT PIPES)C-LINES (Cm)=    8.89000
NUMBER OF HEAT PIPES IN RADIATOR=    259.676
NUMB. OF REDUNDENT HEAT PIPES IN RADIATOR=    25.9676
OUTSIDE DIAMETER OF BRAZE CANS(Cm)=    2.75335
INSIDE DIAMETER OF HEAT PIPE (Cm)=    2.53999
MANIFOLD BRAZE CAN INSIDE RADIUS (Cm)=    1.32588
BRAZE JOINT INSIDE RADIUS (Cm)=    1.32079
FIN THICKNESS (Cm)=    0.253898E-01
THERM. COND. OF FIN MATERIAL (W/(Cm-K))=    1.93842
THERM. COND. OF MANIFOLD CAN MATERIAL (W/CmK)=    0.173073
THERM. COND. OF MANIF. BRAZE ALLOY (W/CmK)=    0.484604
THERM. COND. OF HEAT PIPE WALL MATL (W/CmK)=    3.91193
TOTAL NUMBER OF FINS FOR THE MANIFOLD HEIGHT=    180.000
DENSITY OF MANIFOLD MATERIAL (Grams/CC)=    8.08932
DENSITY OF BRAZE MATERIAL (Grams/CC)=    8.56988
MANIFOLD MATERIAL THICKNESS (Cm)=    0.158750
MANIFOLD INLET PRESSURE (Grams/sq-Cm) =    5624.56
MANIFOLD INLET TEMPERATURE (K)=    466.700
MANIFOLD FLOWRATE (KG/HR)=    8.16972
MANIFOLD AND RADIATOR HEAT LOAD (KWt)=    250.000
MOLECULAR WEIGTH OF MANIFOLD WORKING FLUID=    40.0000

MANIFOLD PRESSURE DROP (Grams/sq-Cm) =    27.7819
MANIFOLD FILM TEMPERATURE DROP (K) =    36.1043
NAK INVENTORY MASS (KG) =    1001.46
NET MASS OF HEAT PIPE MANIFOLD (KG) =    343.698
```

PIPING DEFINITION VARIABLES

```
NUMB. OF 90 DEG. ELBOWS OR EQUIV.=    12.0000
AVERAGE RADIUS FOR 90 DEGREE ELBOWS (Cm)=    14.8324
INSIDE PIPE DIAMETER (Cm)=    3.70810
TOTAL LENGTH OF PIPE SYSTEM (Cm)=    762.000
NAK VELOCITY IN PIPES (M/SEC)=    9.14355
NAK TEMPERATURE (K)=    466.700
NAK PRESSURE (Grams/sq-Cm)=    5624.56
PIPE WALL THICKNESS (Cm)=    0.254000
PIPE WALL DENSITY (Grams/CC)=    8.08932
PIPE INSULATION THICKNESS (Cm)=    10.1600
PIPE INSULATION DENSITY (Grams/CC)=    0.384444
PIPE SYSTEM PRESSURE DROP (Grams/sq-Cm)=    1696.14
PIPE SYSTEM MASS (KG)=    210.384
PIPE SYSTEM NaK MASS (KG) =    9.30602
```

HEAT SOURCE/SINK HEAT EXCHANGER DEFINITION

TUBE SIDE FLUID FLAG = 2
Heat Rate or Duty (KWt) = 250.000
HOT SIDE Inlet Temperature (K)= 466.700
HOT SIDE Outlet Temperature (K)= 444.450
COLD SIDE Inlet Temperature (K)= 416.672
COLD SIDE Outlet Temperature (K)= 450.033
SHELL SIDE FLUID Flowrate (KG/Hr)= 21.6045
SHELL MATERIAL Density (Grams/CC)= 8.08934
INSIDE TUBE Diameter (Cm)= 0.952500
TUBE Wall Thickness (Cm)= 0.508000E-01
TUBE -SIDE Fluid Flowrate (KG/Sec)= 8.16972
TUBE Wall Thermal Conductivity(W/(Cm-K))= 0.173073
SHELLSIDE DP (Grams/sq-Cm) = 620.624
SHELLSIDE H (W/sqCm-K)= 21.5383
FRIC-FAC = 0.265246
UNEW (W/sqCm-K) = 10.2136
NUMBER OF TUBES IN BUNDLE = 81.0944
Tube Side Reynolds Number = 46447.7
Tube Side Press. Drop(Grams/sq-Cm)= 79.1433
Tube Side Hg (W/sqCm-K) = 38.0457
TUBE WALL THICKNESS (Cm) = 0.508000E-01
DOTL2 (Cm) = 13.5269
LENGTH (Cm) = 81.2085

INSULATION MASS (KG) = 17.9807
HEAD MASS (KG) = 0.348632
SHELL MASS (KG) = 2.44042
PLATE MASS (KG) = 0.128418
TUBE SHEETS MASS (KG) = 0.348632
TUBE MASS (KG) = 7.66628
STRUCTURE AND BRACKETS MASS (KG) = 1.44566
MASS OF NaK IN H-X (KG) = 4.99182
Net Mass of Shell and Tube Unit(DRY)(KG)= 30.3588

NaK PUMP DEFINITION

NAK INLET TEMPERATURE (K)= 466.700
NAK FLOWRATE (KG/SEC)= 8.16972
PIPING SYSTEM PRESSURE DROP (G/SC)= 1696.14
NAK SIDE HEAT EXCHANGER PRESSURE DROP (G/SC)= 79.1433
NAK MANIFOLD PRESSURE DROP (G/SC)= 27.7819
NaK LOOP PRESSURE DROP (G/SC) = 1803.07
NaK LOOP PUMP POWER REQUIRED (HYDRAULIC) (WATTS) = 1738.58
E-M PUMP MASS (DRY) (KG) = 271.506

NAK LOOP EXPANSION COMPENSATOR DEFINED

VOLUME ACCUMULATOR Nak MASS (KG) = 54.2511
VOLUME ACCUMULATOR MASS (WET) (KG) = 111.024
MASS SUMMARY FOR INDIRECT BRAYTON SYSTEM

HEAT SINK HEAT EXCHANGER MASS (KG)(DRY)= 30.3588
HEAT EXCHANGER NaK MASS (KG) = 4.99182
NaK PIPING SYSTEM MASS (KG)(DRY) = 210.384
MASS OF NaK IN PIPING SYSTEM (KG) = 9.30602
MASS OF EM PUMP (KG) (WET) = 271.506
HEAT PIPE/NaK MANIFOLD MASS (KG) (DRY) = 343.698
MASS OF NaK IN MANIFOLD (KG) = 1001.46
EXPANSION COMPENSATOR MASS (KG) (DRY) = 111.024
MASS OF NaK IN EXPANSION COMPENSATOR(KG)= 54.2511
RADIATOR MASS (KG) = 1303.22

INDIRECT BRAYTON SYSTEM MASS (KG) (WET) = 3340.20

CASE 6: SHEAR FLOW CONDENSER IN A POTASSIUM RANKINE CYCLE - NO HEAT REJECTION SYSTEM PHYSICAL DATA AVAILABLE

```
*******************************************************************************
CONTENTS OF CALL:   HREJEC(1, 3, 1, 140.64, 855.56, 850.00, 250.0)
*******************************************************************************

CONTENTS OF DATA FILE 'RADAT'
      0, 0.0, 0.0, 0.0 1.0
      0.0, 0.0
      133.6707, 850.0, 40.0, 754.5
      2128.32

*******************************************************************************
OUTPUT FROM HREJEC
*******************************************************************************

THE SIMPLIFIED DATA INPUT OPTION HAS BEEN SELECTED

*** HEAT REJECTION SYSTEM FOR A RANKINE CYCLE SYSTEM IN WHICH CYCLE WASTE HEAT IS REJECTED DIRECTLY FROM THE
CYCLE WORKING FLUID IN A HEAT PIPE COOLED CONDENSER ***

INPUT FOR OPTION NUMBER 3

INPUT FOLLOWING DATA INTO FILE *RADAT* TO RUN OPT #3

           1    1000.00        30.0000        1.00000
    2000.00       0.315360E+09

    1.70000        1.70000       0.703070E+09   0.990000
    1.00000        41.3662        4.13662        43.2447
    2.54000              5            7   0.000000
    66.8897       0.000000       0.127000       0.762000E-02
   0.800000       0.500000        1.00000        2.00000
   0.849788       0.000000        1.81009        1.81009
   0.000000       0.000000

    210.140        43.2447        1.05962        10.1600
   0.000000        850.000       0.508000E-02   0.173073
   0.605756       0.173073        140.614        855.600
    1.00000        8.08932        8.08932        8.40969
   0.158750       0.508000E-01    442.915

C       IENflg,Halt,HINCL,Rsun
C       Yrlnch,Time

C       GAM,ARSF,Earm,PROB
C       CONFIG,Xntubes,Xnexpip,Xlflat
C       Dhpipe,Ifluid,Imatl,Theta
C       D2rad,Thickm,Thickf,Thick
C       Em,Alpha,Hap,HArad
C       Tkfin,Rhocoating,Rhofin,RHOarm
C       Xladiab,Xmchmas

C       Cman,Hman,Gap,THICKins
C       RHOins,Tout,Tbraze,TKcan
C       TKbraze,TKhp,Pin,Tin
C       Xin,RHOpip,RHOcan,RHObraze
C       THICKman,Thtpip,Wman
```

RADIATOR DEFINITION INPUTS

GAMMA = 1.70000
ARSF = 1.70000
ARMOR DENSITY (Grams/CC) = 1.81009
YOUNGS MODULUS OF ARMOR (Grams/CC) = 0.703070E+09
EXPOSURE TIME OR MISSION DURATION (Secs) = 0.315360E+09
NON-PUNCTURE PROBABILITY = 0.970672
RADIATOR HEAT REJECTION RATE (KWt) = 853250.
AVERAGE RADIATOR SURFACE TEMPERATURE (K) = 827.164
NUMBER OF PRIMARY HEAT PIPE IN RADIATOR = 41.3662
NUMBER OF REDUNDENT HEAT PIPES= 4.13662
HEAT PIPE EVAPORATOR LENGTH (Cm)= 43.2447
HEAT PIPE INSIDE DIAMETER (Cm)= 2.54000
HEAT PIPE WORKING FLUID ID NUMBER= 5
HEAT PIPE LINER MATERIAL ID NUMBER= 7
CONE ANGLE FOR CONICAL RADIATOR (DEGREES)= 0.000000
MANIFOLD DIAMETER FOR CONICAL RADIATOR OR MANIFOLD LENGTH DIVIDED BY 3.141593 FOR FLAT PLATE (Cm) =
2038.80
RADIATOR EMISSIVITY CONTROL COATING THICK.(Cm)= 0.000000
RADIATOR FIN THICKNESS (Cm)= 3.87096
HEAT PIPE WALL or LINER THICKNESS (Cm)= 0.232258
RADIATOR SURFACE EMISSIVITY= 0.800000
RADIATOR SURFACE ABSOPTIVITY= 0.500000
RADIATOR PROJ. AREA (FRACT. OF TOT.)= 1.00000
RADIATOR ACTUAL AREA (FRACTION)= 2.00000
THERMAL COND. OF FIN MATERIAL (W/Cm-K) = 0.849774
COATING MATERIAL DENSITY (Grams/CC)= 0.000000
FIN MATERIAL DENSITY (Grams/CC)= 1.81009
LENGTH OF ADIABATIC PORTION OF THE HEAT PIPE (Cm)= 0.000000
MASS OF RADIATOR DEPLOYMENT MECHANISM (KG)= 0.000000

TOTAL HEAT REJECTED (KWt)	AVERAGE EVAPORATOR TEMP (K)	Radiator FIN Thick (Cm)	Emissivity Coating Thick (Cm)
250.0000	827.1643	0.1270	0.0000

Actual (one-side) Area(sq-Me.)	Effective Radiator Area(sq-Me)
6.7048	13.4097

HEAT PIPE DESIGN DETAILS - DIMS in Cm

Pipe ID	Wick Thick	#Arteries	Art ID	Art Wall	Pipe wall
2.5400	0.0129	7.6200	0.6452	0.0129	0.0076

Evap Length	Adi Length	Cond Length	Total Length
43.2447	0.0000	319.0964	362.3411

RADIATOR MASS BREAKDOWN - Mass in KG

Heat Pipes	Fluids	FINS	Emiss. Cont.
26.6823	1.3351	8.4781	0.0000

O.D.ARMOR	I.D.ARMOR	Structure	TOTAL RADIATOR
38.6962	38.6962	0.0000	113.8878

IENflg (ORBIT SELECTION) = 1
IENflg=1, EARTH ORBIT (LEO-GEO)
IENflg=2, SOLAR ORBIT (0.5 to 2.0 AU)
ORBIT ALTITUDE (KM) = 1000.00
ORBIT INCLINATION ANGLE (Degrees) = 30.0000
DISTANCE FROM SUN (AU) = 1.00000
YEAR SATELLITE LAUNCHED = 2000.00

HEAT PIPE COOLED CONDENSER DESCRIPTION

MANIFOLD FLAT LENGTH (Cm) = 210.140
MANIFOLD HEIGHT (Cm) = 43.2447
AVERAGE MANIFOLD COND.SURF.SPACE(Gap)(Cm)= 1.05962
MANIFOLD INSULATION THICKNESS (Cm) = 10.1600
MANIFOLD INSULATION DENSITY (Grams/CC) = 0.000000
NUMBER OF PRIMARY HEAT PIPES ATTACHED TO COOL CONDENSER SURFACE = 41.3662
NUMBER OF REDUNDENT HEAT PIPES USED TO COOL CONDENSER SURFACE = 4.13662
MANIFOLD WALL MATERIAL THICKNESS(Cm)= 0.158750
MANIFOLD-HEAT PIPE BRAZE MATERIAL THICKNESS (Cm) = 0.508000E-02
HEAT PIPE WALL THICKNESS (Cm) = 0.508000E-01
MANIFOLD WALL MAT. THERMAL COND. (W/CmK) = 0.173073
BRAZE MAT. THERMAL COND. (W/CmK) = 0.605756
HEAT PIPE WALL MAT. THERMAL COND. (W/CmK) = 0.173073
MANIFOLD WALL MATERIAL DENSITY (Grams/CC)= 8.08932
BRAZE MATERIAL DENSITY (Grams/CC) = 8.40969
HEAT PIPE WALL MATERIAL DENSITY(Grams/CC)= 8.08932
HEAT PIPE WORKING FLUID NUMBER = 5

MANIFOLD OPERATING CONDITIONS

INLET PRESSURE (G/SC) = 140.614
INLET TEMPERATURE (K) = 855.599
MEAN CONDENSER QUALITY = 1.00000
OUTLET TEMPERATURE (K) = 849.999
MANIFOLD FLOWREATE (KG/Hr) = 442.564
MANIFOLD DUTY (KWt) = 250.000

COMPUTED RESULTS

MANIFOLD PRESSURE DROP (G/SC) = 6.96164
MANIFOLD FILM TEMPERATURE DROP (K) = 25.6271
CONDENSER CONDENSATE FLOW REGIME PARAMETER = 0.127761
CONDENSER IS OPERATING IN SHEAR FLOW REGIME

CONDENSATE FILM REYNOLDS NUMBER = 1901.90
MARTINELLI PARAMETER = 0.133113E-01
VAPOR REYNOLDS NUMBER = 3803.80
MANIFOLD MASS (KG) = 39.6261
MASS SUMMARY FOR CONDENSING RANKINE SYSTEM

HEAT PIPE COOLED CONDENSER MASS (KG) = 39.6261
RADIATOR MASS (KG) = 113.888

CONDENSING RANKINE SYSTEM MASS (KG) = 153.514

APPENDIX C

CODE LISTING

Source file Listing

```
      PROGRAM HRCHEK
C
C     DRIVER CODE TO CHECKOUT SUBROUTINE HRMAST
C
      OPEN(5,FILE='CHKDAT')
      READ (5,*) Iselec,Iprob,IENFLG
      READ (5,*) Pin,Tin,Tout,Qrad
      CALL HREJEC(Iselec,Iprob,IENflg,Pin,Tin,Tout,Qrad)
      STOP
      END
```

```
C
C
C
      SUBROUTINE HREJEC(Iselec,Iprob,IENflg,Pin,Tin,Tout,Qrad)
C
C     COMPUTATION OF THE PERFORMANCE AND MASS OF HEAT REJECTION SYSTEMS
C
C     CODE ESTIMATES THE MASS AND PERFORMANCE OF HEAT PIPE COOLED HEAT
C     REJECTION SYSTEMS THAT OPERATE AS THE MAIN HEAT REJECTION ELEMENTS
C     IN BRAYTON AND RANKINE CYCLE SPACE POWER SYSTEMS.
C
C     AN OPTION IS OFFERED WHEREBY THE CODE WILL SUPPLY MOST OF THE
C     INPUTS REQUIRED AND RETURN THE INPUTS FOR A DETAILED CASE WITH
C     WHICH THE USER CAN START HIS OPTIMIZATION STUDY.
C
C            *** CODE LOGIC AND COMPUTATION OUTLINE ***
C
C     THE FOLLOWING STEPS ARE FOLLOWED IN ESTIMATING THE MASS AND
C     PERFORMANCE OF HEAT PIPE COOLED HEAT REJECTION SYSTEMS IN EITHER
C     BRAYTON OR RANKINE CYCLE APPLICATIONS:
C          1. SELECT THE HEAT REJECTION EQUIPMENT TRAIN AND DEFINE THE
C     EQUIPMENT ELEMENTS REQUIRED.  THREE OPTIONS ARE SUPPLIED:
C                A. DIRECT COOLED GAS MANIFOLD FOR BRAYTONS.
C                B. NaK LIQUID METAL COOLED H-X LOOP FOR BRAYTONS.
C                C. SHEAR FLOW CONDENSER WITH DIRECT HEAT PIPE COOLING
C          2. IF NECESSARY, AN AUXILIARY ROUTINE IS INCLUDED THAT
C     SUPPLIES NON-OPTIMIZED, BUT WORKABLE, INPUT VALUES FOR MOST
C     OF THE VARIABLES REQUIRED TO RUN THE VARIOUS SUBROUTINES.
C          3. ANALYZE THE HYDRAULIC LOOP REQUIRED FOR THE LIQUID
C     USED BY SOME OF THE SYSTEMS.  THE H-X, PIPING AND MANIFOLD DELTA-P
C     IS DETERMINED IN THIS STEP.
C          4. DETERMINE THE WEIGHT OF THE PUMP REQUIRED.
C          5. ON PUMPED LOOP SYSTEMS, A HEAT PIPE TO FLUID HEAT
C     EXCHANGER IS ANALYZED
C          6. ON DIRECT SYSTEMS, A GAS TO HEAT PIPE FLUID HEAT EXCHANGER
C     IS ANALYZED.
C          7. A RADIATOR IS SIZED TO REJECT THE PROPER AMOUNT OF HEAT
C     AND ITS MASS IS DETERMINED.
C          8. CODE OUTPUT CONSISTS OF COMPONENT SIZES AND MASSES.
C
      OPEN(5,FILE='RADAT')
C
      PI = 3.14159265
C
C     IF Iselec = 1, THEN THE CODE WILL SUPPLY MOST OF THE VARIABLE
C     VALUES NEEDED.  IF Iselec = 2, THEN THE USER MUST SUPPLY MOST
C     OF THE VARIABLE VALUES NEEDED
C
C
C     IF Iprob = 1, CODE IS SET UP FOR A DIRECT COOLED BRAYTON
C                   CONFIGURATION.
C     IF Iprob = 2, CODE IS SET UP FOR A LIQUID LOOP COOLED
C                   BRAYTON CONFIGURATION.
```

```
C     IF Iprob = 3, CODE IS SET UP FOR A SHEAR FLOW CONDENSER IN A
C                   POTASSIUM RANKINE CYCLE.
C
C     INPUTS TO DEFINE ORBITS
C
C     IENflg = FLAG TO SET ENVIRONMENT DESIRED
C            = 1, EARTH ORBIT, LEO TO GEO USES GREATER OF DEBRIS
C              OR METEORITE FLUX, NO DEBRIS ABOVE 2000 Km.
C            = 2, BEYOND EARTH ORBIT, 0.25 TO 2.00 AU
C     Halt = ORBIT ALTITUDE (km)
C     HINCL = ORBIT INCLINATION ANGLE (28.5 TO 80.0 degress, ONLY)
C     Rsun = DISTANCE FROM SUN (AU)
C     Yrlnch = YEAR IN WHICH VEHICLE IS PLACED IN ORBIT
C     Time = MISSION DURATION (Secs)
C
C     INPUTS TO DEFINE RADIATOR
C
C     GAM,ARSF = PENETRATION CONSTANTS - FUNCTIONS OF THE SPECIFIC MAT'L
C     RHOarm = ARMOR DENSITY (Lbs/cu-Ft)
C     Earm = YOUNGS MODULUS OF ARMOR (Lbs/sq-In)
C     Prob = NON-PUNCTURE PROBABILITY (0.9, 0.99, 0.999, ETC.)
C     Qrad = RADIATOR HEAT REJECTION RATE (KWt)
C     Trad = AVERAGE RADIATOR SURFACE TEMPERATURE (deg-R)
C     Xntubes = NUMBER OF PRIMARY HEAT PIPE IN RADIATOR
C     Xnexpip = NUMBER OF REDUNDENT HEAT PIPES
C     Xlflat = HEAT PIPE EVAPORATOR LENGTH (INCHES)
C     Dhpipe = HEAT PIPE INSIDE DIAMETER (INCHES)
C     Ifluid = HEAT PIPE WORKING FLUID ID NUMBER
C     Imatl = HEAT PIPE LINER MATERIAL ID NUMBER
C     Theta = CONE ANGLE FOR CONICAL RADIATOR (DEGREES)
C     D2rad = MANIFOLD DIAMETER FOR CONICAL RADIATOR OR MANIFOLD
C             LENGTH DIVIDED BY 3.141593 FOR FLAT PLATE
C     Thickm = RADIATOR EMISSIVITY CONTROL COATING THICKNESS (FEET)
C     Thickf = RADIATOR FIN THICKNESS (FEET)
C     Thick = HEAT PIPE WALL or LINER THICKNESS (FEET)
C     Em = RADIATOR SURFACE EMISSIVITY
C     Alpha = RADIATOR SURFACE ABSOPTIVITY
C     Hap = RADIATOR PROJECTED AREA (TOWARD SUN) (FRACTION OF TOTAL)
C     HArad = RADIATOR ACTUAL AREA (USUALLY = 1.0)
C     Tkfin = THERMAL CONDUCTIVITY OF FIN MATERIAL (BTU/HR-FT-R)
C     Rhocoating = COATING MATERIAL DENSITY (LB/cu-FT)
C     Rhofin = FIN MATERIAL DENSITY (LB/cu-FT)
C     Xladiab = LENGTH OF ADIABATIC PORTION OF THE HEAT PIPE (FEET)
C     Xmchmas = MASS OF RADIATOR DEPLOYMENT MECHANISM (LBS)
C
C     INPUTS TO DEFINE HEAT PIPE COOLED MANIFOLD
C
C     Iflg2 = FLAG TO SET MANIFOLD WORKING FLUID
C             1 = He-Xe MIXTURE
C             2 = NaK
C     Hman = MANIFOLD HEIGHT (Feet)
C     Gap = MANIFOLD WIDTH (Feet)
C     Pitch = DISTANCE BETWEEN CAN (HEAT PIPES) CENTERLINES (Feet)
```

```
C     XNpipes = NUMBER OF HEAT PIPES IN RADIATOR
C     XNEXpipes = NUMBER OF REDUNDENT HEAT PIPES IN RADIATOR
C     Dcan = OUTSIDE DIAMETER OF MANIFOLD BRAZE CANS (Feet)
C     Dhp = INSIDE DIAMETER OF HEAT PIPE (Feet)
C     Rc = MANIFOLD BRAZE CAN INSIDE RADIUS (Feet)
C     Rb = BRAZE JOINT INSIDE RADIUS (Feet)
C     Tf = FIN THICKNESS (Feet)
C     TKfin = THERMAL CONDUCTIVITY OF FIN MATERIAL (BTU/Hr-Ft-R)
C     TKcan = THERMAL CONDUCTIVITY OF MANIFOLD CAN MATERIAL (B/HFR)
C     TKbraze = THERMAL CONDUCTIVITY OF MANIFOLD BRAZE ALLOY (")
C     TKhp = THERMAL CONDUCTIVITY OF HEAT PIPE WALL MATERIAL (")
C     XNf = TOTAL NUMBER OF FINS FOR THE MANIFOLD HEIGHT
C     RHOcan = DENSITY OF MANIFOLD MATERIAL (Lb/cu-Ft)
C     RHObraze = DENSITY OF BRAZE MATERIAL (Lb/cu-Ft)
C     THICKman = MANIFOLD MATERIAL THICKNESS (Feet)
C     Pman = MANIFOLD INLET PRESSURE (PSIA)
C     Tman = MANIFOLD INLET TEMPERATURE (deg-R)
C     Wman = MANIFOLD FLOWRATE (LBS/HR)
C     Qman = MANIFOLD AND RADIATOR HEAT LOAD (BTU/HR)
C     XMW = MOLECULAR WEIGTH OF MANIFOLD WORKING FLUID
C
C     INPUTS TO DEFINE DUCTING
C
C     XN9 = NUMBER OF 90 DEGREE ELBOWS OR EQUIVALENT IN DUCT SYSTEM
C     R9 = AVERAGE RADIUS FOR 90 DEGREE ELBOWS (INCHES)
C     Dp = INSIDE DUCT DIAMETER (INCHES)
C     SUMLEN = TOTAL LENGTH OF DUCT SYSTEM (INCHES)
C     Vpipe = GAS VELOCITY IN DUCTS (FT/SEC)
C     TGAS = GAS TEMPERATURE (deg-R)
C     PGAS = GAS PRESSURE (psia)
C     THICKP = DUCT WALL THICKNESS (INCHES)
C     RHOPIP = DUCT WALL DENSITY (LB/cu-FT)
C     THICKI = DUCT INSULATION THICKNESS (INCHES)
C     RHOINS = DUCT INSULATION DENSITY (LB/cu-FT)
C     XMW = GAS MOLECULAR WEIGHT
C     DPDUCT = DUCT SYSTEM PRESSURE DROP (PSID)
C     DUCMAS = DUCT SYSTEM MASS (LBS)
C
C     INPUTS TO DEFINE HEAT SINK HEAT EXCHANGER
C
C     IHXflf = 1, THEN TUBE SIDE FLUID IS LITHIUM
C     IHXflg = 2, THEN TUBE SIDE FLUID IS NaK-78
C     ALMTD = Heat Exchanger Log Mean Temperature Difference
C     QDOT = Heat Rate or Duty (BTU/Hr)
C     UEST = INITIAL VALUE OF Uoverall (BTU/Hr-Ft-R)
C            (50 for GAS-GAS)
C     THIN = HOT SIDE Inlet Temperature (R)
C     THOUT = HOT SIDE Outlet Temperature (R)
C     TCIN = COLD SIDE Inlet Temperature (R)
C     TCOUT = COLD SIDE Outlet Temperature (R)
C     WDOTS = SHELL SIDE FLUID Flowrate (Lbs/Sec)
C     DENSSH = SHELL MATERIAL Density (Lbs/Ft^3)
C     CPSF = SHELL-SIDE FLUID Specific Heat (BTU/Lb-R)
```

```
C     RHOSF = SHELL-SIDE FLUID Density (Lbs/Ft^3)
C     AKTST = SHELL-SIDE FLUID Thermal Cond (BTU/Hr-Ft-R)
C     VISCST = SHELL-SIDE FLUID Viscosity (Cp)
C     DTUBE = Outside TUBE Diameter - (Inches)
C     TTUBE = TUBE Wall Thickness (Inches)
C     WDOTT = TUBE -SIDE Fluid Flowrate (Lbs/Sec)
C     AKTUBE = TUBE Wall Thermal Conductivity (BTU/Hr-Ft-R)
C     CPT = TUBE-SIDE FLUID Specific Heat (BTU/Lb-R)
C     RHOT = TUBE-SIDE FLUID Density (Lbs/Ft^3)
C     AKTT = TUBE-SIDE FLUID Thermal Cond (BTU/Hr-Ft-R)
C     VISCT = TUBE-SIDE FLUID Viscosity (Lb/Ft-Sec)
C
C     INPUTS TO DEFINE THE NaK PIPING SYSTEM
C
C     XN9 = NUMBER OF 90 DEGREE ELBOWS OR EQUIVALENT IN PIPE SYSTEM
C     R9 = AVERAGE RADIUS FOR 90 DEGREE ELBOWS (INCHES)
C     Dp = INSIDE PIPE DIAMETER (INCHES)
C     SUMLEN = TOTAL LENGTH OF PIPE SYSTEM (INCHES)
C     Vpipe = NAK VELOCITY IN PIPES (FT/SEC)
C     Tnak = Nak TEMPERATURE (deg-R)
C     Pnak = Nak PRESSURE (psia)
C     THICKP = PIPE WALL THICKNESS (INCHES)
C     RHOPIP = PIPE WALL DENSITY (LB/cu-FT)
C     THICKI = PIPE INSULATION THICKNESS (INCHES)
C     RHOINS = PIPE INSULATION DENSITY (LB/cu-FT)
C     DPPIPE = PIPE SYSTEM PRESSURE DROP (PSID)
C     PIPMAS = PIPE SYSTEM MASS (LBS)
C
C     INPUTS TO DEFINE THE NaK PUMP
C
C     PnaK = NAK INLET PRESSURE (PSIA)
C     Tnak = NAK INLET TEMPERATURE (deg-R)
C     Wnak = NAK FLOWRATE (LBS/SEC)
C     DPPIPE = PIPING SYSTED PRESSURE DROP (PSID)
C     DPHX = NAK SIDE HEAT EXCHANGER PRESSURE DROP (PSID)
C     DPMANIF = NAK MANIFOLD PRESSURE DROP
C
C     INPUTS TO DEFINE THE CONDENSER FOR A K-RANKINE CYCLE
C
C     Ar = FLOW CROSS-SECTIONAL AREA (sq ft)
C     Gt = MASS FLUX (lbm/h sq ft)
C     TWM = FLOW RATE PER TUBE(LIQUID PLUS VAPOR), lbm/h
C     V VAPOR VELOCITY, ft/s
C     Y = LOCAL VAPOR WEIGHT FRACTION FACTOR
C     Dh = HYDRAULIC DIAMETER
C     Cgt = TUBESIDE FLOW REGIME PARAMETER
C  IF Cgt < 0.3, SHEAR-CONTROLLED LIQUID FILM HEAT TRANSFER COEFFICIENT
C     Rel = CONDENSATE FILM REYNOLDS NUMBER
C     VCF = VISCOSITY CORRECTION FACTOR , (BULK /WALL)**0.14
C     Hl = SHEAR-CONTROLLED LIQUID FILM HEAT TRANSFER COEFFICIENT
C     Xtt = MARTINELLI PARAMETER, FORM FOR BOTH TURBULENT PHASES
C     Csh = CORRELATION FUNCTION FOR SHEAR-CONTROLLED FLOW HT & DP
C     Ftp = SHEAR-CONTROLLED FLOW TWO PHASE HEAT TRANSFER FACTOR
```

```
C     Hs = SHEAR-CONTROLLED LIQUID FILM HEAT TRANSFER COEFFICIENT
C     DPm =  MOMENTUM PRESSURE DROP (psia)
C     Rev = VAPOR REYNOLDS NUMBER
C     DPl = LIQUID PRESSURE DROP (psia)
C     DPv = VAPOR PRESSURE DROP (psia)
C     FLF = TWO PHASE FRICTION LOSS FACTORS
C     DPf = FRICTION PRESSURE DROP (psia)
C     FF = FRICTION FACTOR
C     ETA = SURFACE ROUGHNESS, ft
C     P = SATURATION PRESSURE (psia)
C     DL = LIQUID DENSITY (lbm/cu ft)
C     VF = LIQUID SPECIFIC VOLUME (cu ft/lbm)
C     HFG = ENTHALPY OF VAPORIZATION (Btu/lbm)
C     HGO = REFERENCE ENTHALPY (Btu/lbm)
C     HG = ENTHALPY VAPOR STATE (Btu/lbm)
C     HF = ENTHALPY LIQUID STATE (Btu/lbm)
C     SFG = ENTROPY OF VAPORIZATION (Btu/lbm R)
C     SGO = REFERENCE ENTROPY STATE (Btu/lbm R)
C     SG = ENTROPY VAPOR STATE (Btu/lbm R)
C     SF = ENTROPY LIQUID STATE (Btu/lbm R)
C     VG = VAPOR SPECIFIC VOLUME (cu ft/lbm)
C     DV = VAPOR DENSITY (lbm/cu ft)
C     Cl = LIQUID HEAT CAPACITY (Btu/lbm)
C     VL = LIQUID VISCOSITY (lbm/ft-h)
C     XKL = LIQUID THERMAL CONDUCTIVITY (Btu/h-ft-R)
C     Pr = LIQUID PRANDTL NUMBER
C     VV = VAPOR VISCOSITY (lbm/ft-h)
C     XKV = VAPOR THERMAL CONDUCTIVITY (Btu/h-ft-R)
C
      IF (Iselec.EQ.1) THEN
      GO TO 1000
      ELSE
      GO TO 10
      ENDIF
   10 GO TO (100,200,300), Iprob
C     INPUTS REQUIRED TO DEFINE ORBIT
C
  100 READ (5,*) IENflg,Halt,HINCL,Rsun
      READ (5,*) Yrlnch,Time
C
C     INPUTS REQUIRED TO DEFINE RADIATOR
C
      READ (5,*) GAM,ARSF,Earm,PROB
      READ (5,*) CONFIG,Xntubes,Xnexpip,Xlflat
      READ (5,*) Dhpipe,Ifluid,Imatl,Theta
      READ (5,*) D2rad,Thickm,Thickf,Thick
      READ (5,*) Em,Alpha,Nap,NArad
      READ (5,*) Tkfin,Rhocoating,Rhofin,RHOarm
      READ (5,*) Xladiab,Xmchmas
C
C     INPUTS REQUIRED TO DEFINE HEAT PIPE MANIFOLD
C
      READ (5,*) Iflg2,Hman,Gap,Pitch
```

```
      READ (5,*) Dcan,Dhp,Rc,Rb
      READ (5,*) Tf,TKfin,TKcan,TKbraze
      READ (5,*) TKhp,XNf,Xmw,RHOcan
      READ (5,*) RHObraze,THICKman,Wman
C
C     INPUTS REQUIRED TO DEFINE DUCTING
C
      READ (5,*) XN9,R9,Dp,SUMLEN
      READ (5,*) THICKP,RHOPIP,THICKI,RHOINS
C
      Cman = PI*D2rad
      XNpipes = Xntubes
      XNexpipes = Xnexpip
C
      CALL HPMAN(Ifluid,Iflg2,Cman,Hman,Gap,Pitch,Dcan,Dhp,Rc,Rb,Tf,TKfi
     &n,TKcan,TKbraze,TKhp,XNf,XNpipes,XNexpipes,Xmw,Pin,Tin,RHOcan,RH
     &Obraze,THICKman,Wman,Qrad,XMANmas,DPman,DTfilm,XMNMAN)
      DTman = Tin-Tout
      CALL TMEAN(Tin,DTman,DTfilm,Trad)
C
      CALL HRRAD(Qrad,Trad,Xntubes,Xnexpip,Xlflat,Dhpipe,Ifluid,Imatl,
     &Theta,D2rad,Thickm,Thickf,Thick,Em,IENflg,Halt,HINCL,Rsun,Yrlnch,
     &Alpha,Hap,HArad,TKfin,Rhocoating,Rhofin,RHOarm,Xladiab,CONFIG,
     &Xmchmas,PROB,GAM,ARSF,Earm,Time,Qrejected,Thickf2,Thickm2,
     &Aradiator,Aradeffect,Wthick2,Xnart2,Artid2,
     &Artwall2,Thick2,Xlevap2,Xladi2,Xlspec2,Xltot2,Xmpipes,Xmfluid,
     &Xmfin,Xmcoating,Xmarmor,Xmarmorid,Xstructure,
     &Xnetradmasst2,Wxl2)
C
      Apipe = (PI*(Dp**2.0))/(4.0*144.0)
      CALL HEXEPR(XMW,Pin,Tin,Gma,CP,RHOgas,AMU,ATK,PR)
      Vpipe = Wman/(RHOgas*Apipe)
      CALL HRDUCT(XN9,R9,Dp,SUMLEN,Vpipe,Tin,Pin,THICKP,RHOPIP,
     &THICKI,RHOINS,XMW,DPDUCT,DUCMAS)
C
      WRITE (6,*) '*** HEAT REJECTION SYSTEM FOR A BRAYTON CYCLE SYSTEM
     &IN WHICH CYCLE WASTE HEAT IS REJECTED DIRECTLY FROM THE CYCLE WORK
     &ING FLUID IN A HEAT PIPE COOLED GAS MANIFOLD ***'
      WRITE (6,*) '  '
      CALL RADPRT(Qrad,Trad,Xntubes,Xnexpip,Xlflat,Dhpipe,Ifluid,I
     &matl,Theta,D2rad,Thickm,Thickf,Thick,Em,
     &Alpha,Hap,HArad,TKfin,Rhocoating,Rhofin,RHOarm,Xladiab,
     &Xmchmas,PROB,GAM,ARSF,Earm,Time,Qrejected,Thickf2,Thickm2,
     &Aradiator,Aradeffect,Wthick2,Xnart2,Artid2,
     &Artwall2,Thick2,Xlevap2,Xladi2,Xlspec2,Xltot2,Xmpipes,Xmfluid,
     &Xmfin,Xmcoating,Xmarmor,Xmarmorid,Xstructure,
     &Xnetradmasst2)
      CALL ORBPRT(IENflg,Halt,HINCL,Rsun,Yrlnch)
C
      CALL HMNPRT(Iflg2,Hman,Gap,Pitch,XNpipes,Xnexpipes,Dcan,
     &Dhp,Rc,Rb,Tf,TKfin,TKcan,TKbraze,TKhp,XNf,RHOcan,RHObraze,
     &THICKman,Pin,Tin,Wman,Qrad,XMW,XMANmas,DPman,DTfilm,XMNMAN)
```

```
C
      CALL DUCPRT(XN9,R9,Dp,SUMLEN,Vpipe,Tin,Pin,THICKP,RHOPIP,
     &THICKI,RHOINS,XMW,DPDUCT,DUCMAS)
C
      WRITE (6,*) 'MASS SUMMARY FOR DIRECT BRAYTON SYSTEM'
      WRITE (6,*) '    '
      WRITE (6,*) 'HEAT PIPE COOLED GAS MANIFOLD MASS (Lbs) =',XMMMAN
      WRITE (6,*) 'MANIFOLD DUCTING MASS (LBS) =',DUCMAS
      WRITE (6,*) 'RADIATOR MASS (LBS) =',Xnetradmasst2
      XMSYST = XMMMAN + DUCMAS + Xnetradmasst2
      WRITE (6,*) '    '
      WRITE (6,*) 'DIRECT BRAYTON SYSTEM MASS (LBS) =',XMSYST
      WRITE (6,*) '    '
      STOP
C
C     CASE WHERE A SECONDARY NAK LOOP IS USED TO TRANSFER HEAT BETWEEN
C     THE CYCLE WORKING FLUID AND THE HEAT PIPE RADIATOR
C
C     INPUTS REQUIRED TO DEFINE ORBIT
C
  200 READ (5,*) IENflg,Halt,HINCL,Rsun
      READ (5,*) Yrinch,Time
C
C     INPUTS REQUIRED TO DEFINE RADIATOR
C
      READ (5,*) GAM,ARSF,Earm,PROB
      READ (5,*) CONFIG,Xntubes,Xnexpip,Xlflat
      READ (5,*) Dhpipe,Ifluid,Imatl,Theta
      READ (5,*) D2rad,Thickm,Thickf,Thick
      READ (5,*) Em,Alpha,Hap,HArad
      READ (5,*) Tkfin,Rhocoating,Rhofin,RHOarm
      READ (5,*) Xladiab,Xmchmas
C
C     INPUTS REQUIRED TO DEFINE HEAT SINK HEAT EXCHANGER
C
      READ (5,*) INXflg,UEST,TCIN,TCOUT
      READ (5,*) WDOTS,AMWS,TINS,DENINS
      READ (5,*) DENSSH,DTUBE,PR,TTUBE
      READ (5,*) ANPLATES,WDOTT,AKTUBE
C
C     INPUTS REQUIRED TO DEFINE HEAT PIPE MANIFOLD
C
      READ (5,*) Iflg2,Hman,Gap,Pitch
      READ (5,*) Dcan,Dhp,Rc,Rb
      READ (5,*) Tf,TKfin,TKcan,TKbraze
      READ (5,*) TKhp,XNf,Xmw,RHOcan
      READ (5,*) RHObraze,THICKman,Wman
C
      READ (5,*) XN9,R9,Dp,SUMLEN
      READ (5,*) THICKP,RHOPIP,THICKI,RHOINS
C
      Cman = PI*D2rad
```

```
      XNpipes = Xntubes
      XNexpipes = Xnexpip
      THIN = Tin
      THOUT = Tout
      PHOT = Pin
      QDOT = Qrad
      AMWS = Xmw
C
      CALL HRSHEL(IHXflg,UEST,THIN,THOUT,PHOT,TCIN,TCOUT,WDOTS,AMW
     &S,TINS,DENINS,DENSSH,DTUBE,PR,TTUBE,ANPLATES,WDOTT,AKTUBE,Q
     &DOT,DPSHELL,ANTUBES,DPTUBE,DOTL2,ALSHEL,AMSHELL,AMPLATES,
     &AMTUBES,AMINSUL,AMHEADS,AMSTRT,AMETMASS,XMNHEX,HSHELL,AFRIC,UNEW,
     &RETUBE,THC,AMTSHT)
C
      CALL HPMAN(Ifluid,Iflg2,Cman,Wman,Gap,Pitch,Dcan,Dhp,Rc,Rb,Tf,TKfi
     &n,TKcan,TKbraze,TKhp,XNf,XNpipes,XNexpipes,Xmw,Pin,Tin,RHOcan,RH
     &Obraze,THICKman,Wman,Qrad,XMANmas,DPman,DTfilm,XMNMAN)
C
      Apipe = (PI*(Dp**2.0))/(4.0*144.0)
      CALL XNAKPR(Tin,RHONAK,CP,VIS,TK)
      Vpipe = Wman/(3600.0*RHONAK*Apipe)
      Tnak = Tin
      Pnak = Pin
      CALL HRPIPE(XN9,R9,Dp,SUMLEN,Vpipe,Tnak,Pnak,THICKP,RHOPIP,THICKI,
     &RHOINS,DPPIPE,PIPnak,PIPMAS)
C
      Wnak = Wman
      DPHX = DPTUBE
      DPMANIF = DPman
      CALL PUMP(Tnak,Wnak,DPPIPE,DPHX,DPMANIF,DPLOOP,Phyd,XMPUMP)
C
      CALL VACMAS(Tnak,XMNPIP,XMNMAN,XMNHEX,XMNVAC,XMVAC)
C
      DTman = Tin-Tout
      CALL TMEAN(Tin,DTman,DTfilm,Trad)
      CALL HRRAD(Qrad,Trad,Xntubes,Xnexpip,Xlflat,Dhpipe,Ifluid,Imatl,
     &Theta,D2rad,Thickm,Thickf,Thick,Em,IENflg,Halt,HINCL,Rsun,Yrinch,
     &Alpha,Hap,HArad,TKfin,Rhocoating,Rhofin,RHOarm,Xladiab,CONFIG,
     &Xmchmas,PROB,GAM,ARSF,Earm,Time,Qrejected,Thickf2,Thickm2,
     &Aradiator,Aradeffect,Wthick2,Xnart2,Artid2,
     &Artwall2,Thick2,Xlevap2,Xladi2,Xlspec2,Xltot2,Xmpipes,Xmfluid,
     &Xmfin,Xmcoating,Xmarmor,Xmarmorid,Xstructure,
     &Xnetradmasst2,Wxl2)
C
      WRITE (6,*) '*** HEAT REJECTION SYSTEM FOR A BRAYTON CYCLE SYSTEM
     &IN WHICH CYCLE WASTE HEAT IS REJECTED TO A PUMPED NaK LOOP FROM
     &THE CYCLE WORKING FLUID TO A HEAT PIPE COOLED GAS MANIFOLD ***'
      WRITE (6,*) '   '
      CALL RADPRT(Qrad,Trad,Xntubes,Xnexpip,Xlflat,Dhpipe,Ifluid,I
     &matl,Theta,D2rad,Thickm,Thickf,Thick,Em,
     &Alpha,Hap,HArad,TKfin,Rhocoating,Rhofin,RHOarm,Xladiab,
     &Xmchmas,PROB,GAM,ARSF,Earm,Time,Qrejected,Thickf2,Thickm2,
     &Aradiator,Aradeffect,Wthick2,Xnart2,Artid2,
```

```
      &Artwall2,Thick2,Xlevap2,Xladi2,Xlspec2,Xltot2,Xmpipes,Xmfluid,
      &Xmfin,Xmcoating,Xmarmor,Xmarmorid,Xstructure,
      &Xnetradmasst2)
       CALL ORBPRT(IENflg,Halt,HINCL,Rsun,Yrlnch)
C
       CALL HMNPRT(Iflg2,Wman,Gap,Pitch,XNpipes,Xnexpipes,Dcan,
      &Dhp,Rc,Rb,Tf,TKfin,TKcan,TKbraze,TKhp,XNf,RHOcan,RHObraze,
      &THICKman,Pin,Tin,Wman,Qrad,XMW,XMANmas,DPman,DTfilm,XMNMAN)
       WRITE (6,*) '    '
C
       CALL PIPPRT(XN9,R9,Dp,SUMLEN,Vpipe,Tnak,Pnak,THICKP,RHOPIP,
      &THICKI,RHOINS,DPPIPE,PIPNAK,PIPMAS)
       WRITE (6,*) '    '
       CALL HSHXPT(IHXflg,QDOT,THIN,THOUT,TCIN,TCOUT,WDOTS,DENSSH,
      &DTUBE,TTUBE,WDOTT,AKTUBE,DPSHELL,ANTUBES,DPTUBE,DOTL2,ALSHEL,
      &AMSHELL,AMPLATES,AMTUBES,ANETMASS,XMNHEX,HSHELL,AFRIC,UNEW,RETUBE,
      &THC,AMINSUL,AMHEADS,AMTSHT,AMSTRT)
       WRITE (6,*) '    '
       CALL PMPPRT(Tin,WDOTT,DPPIPE,DPTUBE,DPMAN,DPLOOP,Phyd,
      &XMPUMP)
       CALL VACPRT(XMNvac,XMVAC)
C
       WRITE (6,*) 'MASS SUMMARY FOR INDIRECT BRAYTON SYSTEM'
       WRITE (6,*) '    '
       WRITE (6,*) 'HEAT SINK HEAT EXCHANGER MASS (LBS)(DRY) =',ANETMASS
       WRITE (6,*) 'HEAT EXCHANGER NaK MASS (LBS) =',XMNHEX
       WRITE (6,*) 'NaK PIPING SYSTEM MASS (LBS)(DRY) =',PIPMAS
       WRITE (6,*) 'MASS OF NaK IN PIPING SYSTEM (LBS) =',PIPNAK
       WRITE (6,*) 'MASS OF EM PUMP (LBS) (WET) =',XMPUMP
       WRITE (6,*) 'HEAT PIPE/NaK MANIFOLD MASS (Lbs) (DRY) =',XMANmas
       WRITE (6,*) 'MASS OF NaK IN MANIFOLD (LBS) =',XMNMAN
       WRITE (6,*) 'EXPANSION COMPENSATOR MASS (LBS) (DRY) =',XMVAC
       WRITE (6,*) 'MASS OF NaK IN EXPANSION COMPENSATOR (LBS) =',XMNVAC
       WRITE (6,*) 'RADIATOR MASS (LBS) =',Xnetradmasst2
       XMSYST = ANETMASS + XMNHEX + PIPMAS + PIPNAK + XMPUMP + XMANmas
      & + XMNMAN + XMVAC + XMNVAC + Xnetradmasst2
       WRITE (6,*) '    '
       WRITE (6,*) 'INDIRECT BRAYTON SYSTEM MASS (LBS) (WET) =',XMSYST
       WRITE (6,*)
       STOP
C
C      CASE WHERE A DIRECT CONDENSING SHEAR FLOW CONDENSER IS USED TO
C      REJECT HEAT FROM A RANKINE CYCLE
C
C      INPUTS REQUIRED TO DEFINE ORBIT
C
  300 READ (5,*) IENflg,Halt,HINCL,Rsun
       READ (5,*) Yrlnch,Time
C
C      INPUTS REQUIRED TO DEFINE RADIATOR
C
       READ (5,*) GAM,ARSF,Earm,PROB
```

```
      READ (5,*) CONFIG,Xntubes,Xnexpip,Xlflat
      READ (5,*) Dhpipe,Ifluid,Imatl,Theta
      READ (5,*) D2rad,Thickm,Thickf,Thick
      READ (5,*) Em,Alpha,Hap,HArad
      READ (5,*) Tkfin,Rhocoating,Rhofin,RHOarm
      READ (5,*) Xladiab,Xmchmas
C
C     INPUTS REQUIRED TO DEFINE CONDENSER
C
      READ (5,*) Cman,Hman,Gap,THICKins
      READ (5,*) RHOins,Tout,Tbraze,TKcan
      READ (5,*) TKbraze,TKhp,Pin,Tin
      READ (5,*) Xin,RHOpip,RHOcan,RHObraze
      READ (5,*) THICKman,Thtpip,Wman
C
      XNpipes = Xntubes
      XNexpipes = Xnexpip
      CALL CONMAN(Ifluid,Cman,Hman,Gap,THICKins,RHOins,Tout,
     &Tbraze,TKcan,TKbraze,TKhp,XNpipes,XNexpipes,Pin,Tin,Xin,RHOpip,
     &RHOcan,RHObraze,THICKman,Thtpip,Wman,Qrad,XMANmas,DPman,DTFsup,
     &Ar,Gt,V,Dh,Cgt,Rel,Hl,Xtt,Rev,
     &DTFcon,DTFsub,DTfilm)
C
      DTman = Tin-Tout
      CALL TMEAN(Tin,DTman,DTfilm,Trad)
C
      CALL HRRAD(Qrad,Trad,Xntubes,Xnexpip,Xlflat,Dhpipe,Ifluid,Imatl,
     &Theta,D2rad,Thickm,Thickf,Thick,Em,IENflg,Halt,HINCL,Rsun,Yrinch,
     &Alpha,Hap,HArad,TKfin,Rhocoating,Rhofin,RHOarm,Xladiab,CONFIG,
     &Xmchmas,PROB,GAM,ARSF,Earm,Time,Qrejected,Thickf2,Thickm2,
     &Aradiator,Aradeffect,Wthick2,Xnart2,Artid2,
     &Artwall2,Thick2,Xlevap2,Xladi2,Xlspec2,Xltot2,Xmpipes,Xmfluid,
     &Xmfin,Xmcoating,Xmarmor,Xmarmorid,Xstructure,
     &Xnetradmasst2,Wxl2)
C
      WRITE (6,*) '*** HEAT REJECTION SYSTEM FOR A RANKINE CYCLE SYSTEM
     &IN WHICH CYCLE WASTE HEAT IS REJECTED DIRECTLY FROM THE CYCLE WORK
     &ING FLUID IN A HEAT PIPE COOLED CONDENSER ***'
      WRITE (6,*) '   '
      CALL RADPRT(Qrad,Trad,Xntubes,Xnexpip,Xlflat,Dhpipe,Ifluid,I
     &matl,Theta,D2rad,Thickm,Thickf,Thick,Em,
     &Alpha,Hap,HArad,TKfin,Rhocoating,Rhofin,RHOarm,Xladiab,
     &Xmchmas,PROB,GAM,ARSF,Earm,Time,Qrejected,Thickf2,Thickm2,
     &Aradiator,Aradeffect,Wthick2,Xnart2,Artid2,
     &Artwall2,Thick2,Xlevap2,Xladi2,Xlspec2,Xltot2,Xmpipes,Xmfluid,
     &Xmfin,Xmcoating,Xmarmor,Xmarmorid,Xstructure,
     &Xnetradmasst2)
      CALL ORBPRT(IENflg,Halt,HINCL,Rsun,Yrinch)
C
      CALL CONPRT(Ar,Gt,V,Dh,Cgt,Rel,Hl,Xtt,Rev,
     &Ifluid,Cman,Hman,Gap,THICKins,RHOins,Tout,
     &Tbraze,TKcan,TKbraze,TKhp,XNpipes,XNexpipes,Pin,Tin,Xin,RHOpip,
     &RHOcan,RHObraze,THICKman,Thtpip,Wman,Qrad,XMANmas,DPman,
```

```
      &DTfilm)
C
C
      WRITE (6,*) 'MASS SUMMARY FOR CONDENSING RANKINE SYSTEM'
      WRITE (6,*) '    '
      WRITE (6,*) 'HEAT PIPE COOLED CONDENSER MASS (Lbs) =',XMANmas
      WRITE (6,*) 'RADIATOR MASS (LBS) =',Xnetradmasst2
      XMSYST = XMANmas + Xnetradmasst2
      WRITE (6,*) '    '
      WRITE (6,*) 'CONDENSING RANKINE SYSTEM MASS (LBS) =',XMSYST
      WRITE (6,*) '    '
      STOP
C
 1000 WRITE (6,*) 'THE SIMPLIFIED DATA INPUT OPTION HAS BEEN SELECTED'
C
C     READ INPUTS TO DEFINE ORBITS
C     IF IENflg = 0, THEN USE DEFAULTS OF:
C         Halt = 1000.0 Km
C         HINCL = 30.0
C         Rsun = 1.0
C         Yrlnch = 2000.0
C         Time = 10.0*365.0*24.0*3600.0
 1001 READ (5,*) IENflg,Halt,HINCL,Rsun
      READ (5,*) Yrlnch,Time
      IF (IENflg.EQ.0) THEN
      Halt = 1000.0
      HINCL = 30.0
      Rsun = 1.0
      Yrlnch = 2000.0
      Time = 10.0*365.0*24.0*3600.0
      IENflg = 1
      ELSE
      Halt = Halt
      ENDIF
C     READ IN DATA TO DEFINE PROBLEM
      READ (5,*) Pin,Tin,Xmw,Tout
      READ (5,*) Qrad
C
C     Pin = CYCLE WORKING FLUID INLET PRESSURE (PSIA)
C     Tin = CYCLE WORKING FLUID INLET TEMPERATURE (deg-R)
C     Xmw = CYCLE WORKING FLUID MOLECULAR WEIGHT (MW)
C     Tout  = CYCLE WORKING FLUID OUTLET TEMPERATURE (deg-R)
C     Qrad = CYCLE TOTAL HEAT REJECTION RATE REQUIRED (KWt)
C     Time = MISSION TIME (SECONDS)
C
C     CODE WILL ATTEMPT TO ESTIMATE THE VALUES REQUIRED TO RUN THE FULL
C     CASE WHICH CAN BE USED AS THE STARTING POINT FOR A FULL ANALYSIS
C
      IF (Iprob.EQ.1) THEN
      GO TO 1005
      ELSE
      GO TO 1200
```

```
590          ENDIF
591   C
592   C      SET MANIFOLD GAS VELOCITY TO DESIGN MANIFOLD
593   C
594    1005  Vgasman = 35.0
595          Iflg2 = 1
596          DTman = Tin-Tout
597          DTfilm = 50.0
598          CALL TMEAN(Tin,DTman,DTfilm,Tbar)
599          CALL RADFLG(Tin,Ifluid,Imatl)
600          Alpha = 0.5
601          Hap = 1.0
602          HArad = 2.0
603   C      WRITE (6,*) 'Vgasman,Iflg2,DTman,DTfilm=',Vgasman,Iflg2,DTman,DTfi
604   C     &lm
605   C      WRITE (6,*) 'Tin,Tbar,Ifluid,Imatl=',Tin,Tbar,Ifluid,Imatl
606          CALL HRTSNK(IENflg,Halt,HINCL,Rsun,Yrlnch,Alpha,Hap,HArad,Tsink)
607   C      WRITE (6,*) 'Alpha,Hap,HArad,Tsink=',Alpha,Hap,HArad,Tsink
608          Em = 0.8
609          Etarad = 0.65+(0.0002*Tbar)
610          Aradest = (3413.0*Qrad)/(0.1713E-08*Em*Etarad*((Tbar**4.0)-(Tsink*
611         &*4.0)))
612          Aactual = 0.5*Aradest
613   C      WRITE (6,*) 'Em,Etarad,Aradest,Aactual=',Em,Etarad,Aradest,Aactual
614          DUMLen = 20.0
615          Width = Aactual/DUMlen
616          Cman = Width
617          Xntubes = (12.0*Width)/3.5
618   C      WRITE (6,*) 'DUMlen,Width,Cman,Xntubes=',DUMlen,Width,Cman,Xntubes
619          Xnexpip = 0.1*Xntubes
620          Pitch = 3.5/12.0
621          Dcan = 0.090333
622   C      WRITE (6,*) 'Xnexpip,Pitch,Dcan=',Xnexpip,Pitch,Dcan
623          Dhp = 0.083333
624          Rc = 0.043500
625          Rb = 0.043333
626          Tf = 0.000833
627   C      WRITE (6,*) 'Dhp,Rc,Rb,Tf=',Dhp,Rc,Rb,Tf
628          TKfin = 112.0
629          TKcan = 10.0
630          TKbraze = 28.0
631          T0 = Tin/1.8-273.2
632   C      WRITE (6,*) 'TKfin,TKcan,TKbraze,T0=',TKfin,TKcan,TKbraze,T0
633          CALL Wallprop(Imatl,T0,Wallden,Tcwall)
634          TKhp = 242.0*Tcwall
635          XNpipes = Xntubes
636   C      WRITE (6,*) 'Wallden,Tcwall,TKhp=',Wallden,Tcwall,TKhp
637          XNexpipes = Xnexpip
638          XMW = Xmw
639          Pman = Pin
640   C      WRITE (6,*) 'XNpipes,XNexpipes,XMW,Pman=',XNpipes,XNexpipes,XMW,Pm
641   C     &an
642          Tman = Tin
```

```
      RHOcan = 505.0
      RHObraze = 535.0
      THICKman = 0.005208 + (0.000052*Pin)
C     WRITE (6,*) 'Tman,RHOcan,RHObraze,THICKman=',Tman,RHOcan,RHObraze,
C    &THICKman
      CALL HEXEPR(XMW,Pman,Tman,Gma,Cp,Rho,Amu,Tcond,Pr)
C     WRITE (6,*) 'Gma,Cp,Rho,Amu=',Gma,Cp,Rho,Amu
      Wman = (3413.0*Qrad)/(3600.0*Cp*(Tin-Tout))
      Gap = (6.0+(12.0*Dcan))/12.0
      Hman = 1.50
      XNf = Hman*12.0*10.0
C     WRITE (6,*) 'Tcond,Pr,Wman,Gap=',Tcond,Pr,Wman,Gap
 1008 Amin = (Gap*Hman) - (Dcan*Hman)
      Vman = Wman/(Rho*Amin)
      ERROR3 = (Vgasman/Vman)-1.0
      IF (ERROR3.GT.0.1) THEN
      ERROR3 = 0.1
      ELSE
      ERROR3=ERROR3
      ENDIF
      Hman = Hman*(1.0+(0.8*ABS(ERROR3)))
      XNf = Hman*12.0*10.0
C     WRITE (6,*) 'ERROR3 =',ERROR3
C     WRITE (6,*) 'Hman =',Hman
      IF (ABS(ERROR3).GT.0.0001) THEN
      GO TO 1008
      ELSE
      GO TO 1009
      ENDIF
 1009 CONTINUE
C     WRITE (6,*) 'INPUTS FOR HPMAN FROM LINE 598'
C     WRITE (6,*) 'Ifluid,Iflg2,Cman,Hman=',Ifluid,Iflg2,Cman,Hman
C     WRITE (6,*) 'Gap,Pitch,Dcan,Dhp=',Gap,Pitch,Dcan,Dhp
C     WRITE (6,*) 'Rc,Rb,Tf,TKfin=',Rc,Rb,Tf,TKfin
C     WRITE (6,*) 'TKcan,TKbraze,TKhp,Xnf=',TKcan,TKbraze,TKhp,Xnf
C     WRITE (6,*) 'XNpipes,XNexpipes,Xmw,Pin=',XNpipes,XNexpipes,Xmw,Pin
C     WRITE (6,*) 'Tin,RHOcan,RHObraze,THICKman=',Tin,RHOcan,RHObraze,TH
C    &ICKman
C     WRITE (6,*) 'Wman,Qrad=',Wman,Qrad
      CALL HPMAN(Ifluid,Iflg2,Cman,Hman,Gap,Pitch,Dcan,Dhp,Rc,Rb,Tf,TKfi
     &n,TKcan,TKbraze,TKhp,XNf,XNpipes,XNexpipes,Xmw,Pin,Tin,RHOcan,RH
     &Obraze,THICKman,Wman,Qrad,XMANmas,DPman,DTfilm,XMNMAN)
      Qrad = Qrad
      Trad = Tbar
      Xntubes = (12.0*Width)/3.5
      Xnexpip = 0.1*Xntubes
      Xlflat = Hman*12.0
      Dhpipe = 1.0
      CALL RADFLG(Tbar,Ifluid,Imatl)
 1100 THETA = 0.0
      D2rad = Width/PI
      Thickm = 0.0
```

```
      Thickf = 0.050/12.0
      Thick = 0.003/12.0
      Em = 0.8
      Tkfin = 49.1
      Rhocoating = 0.0
      Rhofin = 113.0
      RHOarm = 113.0
      Xladiab = 0.0
      Xmchmas = 0.0
      PROB = 0.99
      GAM = 1.70
      ARSF = 1.70
      Earm = 10000000.0
      CONFIG =1.0
      CALL TMEAN(Tin,DTman,DTfilm,Trad)
      CALL HRRAD(Qrad,Trad,Xntubes,Xnexpip,Xlflat,Dhpipe,Ifluid,Imatl,
     &Theta,D2rad,Thickm,Thickf,Thick,Em,IENflg,Halt,HINCL,Rsun,Yrlnch,
     &Alpha,Hap,HArad,TKfin,Rhocoating,Rhofin,RHOarm,Xladiab,CONFIG,
     &Xmchmas,PROB,GAM,ARSF,Earm,Time,Qrejected,Thickf2,Thickm2,
     &Aradiator,Aradeffect,Wthick2,Xnart2,Artid2,
     &Artwall2,Thick2,Xlevap2,Xladi2,Xlspec2,Xltot2,Xmpipes,Xmfluid,
     &Xmfin,Xmcoating,Xmarmor,Xmarmorid,Xstructure,
     &Xnetradmasst2,Wxl2)
C
      XN9 = 12.0
      Vpipe = 100.0
      PGAS = Pin
      TGAS = Tin
      CALL HEXEPR(XMW,PGAS,TGAS,GMA,CP,RHOgas,AMU,AK,PR)
      Dp = 12.0*SQRT((1.27324*Wman)/(RHOgas*Vpipe))
C     WRITE (6,*) 'RHOgas =',RHOgas
C     WRITE (6,*) 'Dp =',Dp
      SUMLEN = 12.0*Dp
      THICKP = PGAS*Dp/(2.0*5000.0)
      IF (THICKP.GT.0.03125)  THEN
      THICKP = THICKP
      ELSE
      THICKP = 0.03125
      ENDIF
      THICKI = 4.0
      RHOPIP = 505.0
      RHOINS = 16.0
      R9 = 4.0*Dp
      CALL HRDUCT(XN9,R9,Dp,SUMLEN,Vpipe,TGAS,PGAS,THICKP,RHOPIP,
     &THICKI,RHOINS,XMW,DPDUCT,DUCMAS)
C
C
      WRITE (6,*) '*** HEAT REJECTION SYSTEM FOR A BRAYTON CYCLE SYSTEM
     &IN WHICH CYCLE WASTE HEAT IS REJECTED DIRECTLY FROM THE CYCLE WORK
     &ING FLUID IN A HEAT PIPE COOLED GAS MANIFOLD ***'
      WRITE (6,*) '   '
      WRITE (6,*) 'INPUT FOR OPTION NUMBER 1'
```

```
      WRITE (6,*) '   '
      WRITE (6,*) 'INPUT FOLLOWING DATA INTO FILE *RADAT* TO RUN OPT #1'
      WRITE (6,*) '   '
C     DEFINE ORBIT
      WRITE (6,*) IENflg,Halt,HINCL,Rsun
      WRITE (6,*) Yrlnch,Time
      WRITE (6,*) '     '
C     DEFINE RADIATOR
      WRITE (6,*) GAM,ARSF,Earm,PROB
      WRITE (6,*) CONFIG,Xntubes,Xnexpip,Xlflat
      WRITE (6,*) Dhpipe,Ifluid,Imatl,Theta
      WRITE (6,*) D2rad,Thickm,Thickf,Thick
      WRITE (6,*) Em,Alpha,Hap,HArad
      WRITE (6,*) Tkfin,Rhocoating,Rhofin,RHOarm
      WRITE (6,*) Xladiab,Xmchmas
      WRITE (6,*) '     '
C     DEFINE HEAT PIPE MANIFOLD
      WRITE (6,*) Iflg2,Hman,Gap,Pitch
      WRITE (6,*) Dcan,Dhp,Rc,Rb
      WRITE (6,*) Tf,TKfin,TKcan,TKbraze
      WRITE (6,*) TKhp,XNf,Xmw,RHOcan
      WRITE (6,*) RHObraze,THICKman,Wman
      WRITE (6,*) '     '
C     DEFINE DUCTING
      WRITE (6,*) XN9,R9,Dp,SUMLEN
      WRITE (6,*) THICKP,RHOPIP,THICKI,RHOINS
      WRITE (6,*) '     '
      WRITE (6,*) 'C     IENflg,Halt,HINCL,Rsun'
      WRITE (6,*) 'C     Yrlnch,Time'
      WRITE (6,*) '     '
      WRITE (6,*) 'C     GAM,ARSF,Earm,PROB'
      WRITE (6,*) 'C     CONFIG,Xntubes,Xnexpip,Xlflat'
      WRITE (6,*) 'C     Dhpipe,Ifluid,Imatl,Theta'
      WRITE (6,*) 'C     D2rad,Thickm,Thickf,Thick'
      WRITE (6,*) 'C     Em,Alpha,Hap,HArad'
      WRITE (6,*) 'C     Tkfin,Rhocoating,Rhofin,RHOarm'
      WRITE (6,*) 'C     Xladiab,Xmchmas'
      WRITE (6,*) '     '
      WRITE (6,*) 'C     Iflg2,Hman,Gap,Pitch'
      WRITE (6,*) 'C     Dcan,Dhp,Rc,Rb'
      WRITE (6,*) 'C     Tf,TKfin,TKcan,TKbraze'
      WRITE (6,*) 'C     TKhp,XNf,Xmw,RHOcan'
      WRITE (6,*) 'C     RHObraze,THICKman,Wman'
      WRITE (6,*) '     '
      WRITE (6,*) 'C     XN9,R9,Dp,SUMLEN'
      WRITE (6,*) 'C     THICKP,RHOPIP,THICKI,RHOINS'
      CALL RADPRT(Qrad,Trad,Xntubes,Xnexpip,Xlflat,Dhpipe,Ifluid,I
     &matl,Theta,D2rad,Thickm,Thickf,Thick,Em,
     &Alpha,Hap,HArad,TKfin,Rhocoating,Rhofin,RHOarm,Xladiab,
     &Xmchmas,PROB,GAM,ARSF,Earm,Time,Qrejected,Thickf2,Thickm2,
     &Aradiator,Aradeffect,Wthick2,Xnart2,Artid2,
     &Artwall2,Thick2,Xlevap2,Xladi2,Xlspec2,Xltot2,Xmpipes,Xmfluid,
     &Xmfin,Xmcoating,Xmarmor,Xmarmorid,Xstructure,
```

```
      &Xnetradmasst2)
       CALL ORBPRT(IENflg,Halt,HINCL,Rsun,Yrinch)
C
       CALL HMNPRT(Iflg2,Hman,Gap,Pitch,XNpipes,Xnexpipes,Dcan,
      &Dhp,Rc,Rb,Tf,TKfin,TKcan,TKbraze,TKhp,XNf,RHOcan,RHObraze,
      &THICKman,Pin,Tin,Wman,Qrad,XMW,XMANmas,DPman,DTfilm,XMNMAN)
       WRITE (6,*) '    '
C
       CALL DUCPRT(XN9,R9,Dp,SUMLEN,Vpipe,Tin,Pin,THICKP,RHOPIP,
      &THICKI,RHOINS,XMN,DPDUCT,DUCMAS)
C
       WRITE (6,*) 'MASS SUMMARY FOR DIRECT BRAYTON SYSTEM'
       WRITE (6,*) '    '
       WRITE (6,*) 'HEAT PIPE COOLED GAS MANIFOLD MASS (Lbs) =',XMNMAN
       WRITE (6,*) 'MANIFOLD DUCTING MASS (LBS) =',DUCMAS
       WRITE (6,*) 'RADIATOR MASS (LBS) =',Xnetradmasst2
       XMSYST = XMNMAN + DUCMAS + Xnetradmasst2
       WRITE (6,*) '    '
       WRITE (6,*) 'DIRECT BRAYTON SYSTEM MASS (LBS) =',XMSYST
       WRITE (6,*) '    '
C
       STOP
C
 1200 IF (Iprob.EQ.3) THEN
       GO TO 1400
       ELSE
       GO TO 1205
       ENDIF
 1205 IHXflg = 2
C
C      DESIGN HEAT REJECTION HEAT EXCHANGER (HRHX)
C
       UEST = 100.0
       THIN = Tin
       THOUT = Tout
       PHOT = Pin
       TCOUT = THIN - 30.0
       TCIN = THOUT - 50.0
       CALL HEXEPR(XMW,PHOT,THIN,GMA,CP,RHO,AMU,TCOND,PR)
       WRITE (6,*) '    '
C      WRITE (6,*) 'IHXflg,UEST,THIN,THOUT,PHOT,TCOUT,TCIN =',IHXflg,
C     &UEST,THIN,THOUT,PHOT,TCOUT,TCIN
C      WRITE (6,*) 'XMW,PHOT,THIN,GMA,CP,RHO,AMU,TCOND,PR =',XMW,PHOT,
C     &THIN,GMA,CP,RHO,AMU,TCOND,PR
       WDOTS = (3413.0*Qrad)/(3600.0*CP*(THIN-THOUT))
       AMWS = XMW
       TINS = 4.0
       DENINS = 24.0
       DENSSH = 505.0
       DTUBE = 0.375
       PR = 1.3
       TTUBE = 0.020
```

```
      ANPLATES = 5.0
C     WRITE (6,*) 'WDOTS,AMWS,TINS,DENINS,DENSSH,DTUBE,PR,TTUBE,ANPLATES
C    & =',WDOTS,AMWS,TINS,DENINS,DENSSH,DTUBE,PR,TTUBE,ANPLATES
      CALL XNAKPR(TCIN,RHOnak,CPnak,VISnak,TKnak)
C     WRITE (6,*) 'TCIN,RHOnak,CPnak,VISnak,TKnak =',TCIN,RHOnak,CPnak,
C    &VISnak,TKnak
      WDOTT = (3413.0*Qrad)/(3600.0*CPnak*(TCOUT-TCIN))
      AKTUBE = 10.0
      QDOT = 3413.0*Qrad
C     WRITE (6,*) 'WDOTT,AKTUBE,QDOT =',WDOTT,AKTUBE,QDOT
C     WRITE (6,*) 'CALLING HRSHEL'
      CALL HRSHEL(IHXflg,UEST,THIN,THOUT,PHOT,TCIN,TCOUT,WDOTS,AMW
     &S,TINS,DENINS,DENSSH,DTUBE,PR,TTUBE,ANPLATES,WDOTT,AKTUBE,Q
     &DOT,DPSHELL,ANTUBES,DPTUBE,DOTL2,ALSHEL,AMSHELL,AMPLATES,
     &AMTUBES,AMINSUL,AMHEADS,AMSTRT,ANETMASS,XMNHEX,HSHELL,AFRIC,UNEW,
     &RETUBE,THC,AMTSHT)
C
C     SET MANIFOLD LIQUID VELOCITY TO DESIGN MANIFOLD
C
      Vliqman = 30.0
      Iflg2 = 2
      DTman = Tin-Tout
      DTfilm = 50.0
      CALL TMEAN(Tin,DTman,DTfilm,Tbar)
      CALL RADFLG(Tin,Ifluid,Imatl)
      Alpha = 0.5
      Hap = 1.0
      HArad = 2.0
      CALL HRTSNK(IENflg,Halt,HINCL,Rsun,Yrinch,Alpha,Hap,HArad,Tsink)
      Em = 0.8
      Etarad = 0.65+(0.0002*Tbar)
      Aradest = (3413.0*Qrad)/(0.1713E-08*Em*Etarad*((Tbar**4.0)-(Tsink*
     &*4.0)))
      Aactual = 0.5*Aradest
      DUMLen = 20.0
      Width = Aactual/DUMlen
      Cman = Width
C     WRITE (6,*) '*****FROM LINE B19****'
C     WRITE (6,*) 'Etarad,Aradest,Aactual,Width,Cman==',Etarad,Aradest,A
C    &ctual,Width,Cman
      Hman = 1.5
      Pitch = 3.5/12.0
      Dcan = 0.090333
      Dhp = 0.083333
      Rc = 0.043500
      Rb = 0.043333
      Tf = 0.000833
      TKfin = 112.0
      TKcan = 10.0
      TKbraze = 28.0
      T0 = Trad/1.8-273.2
      CALL Wallprop(Imatl,T0,Wallden,Tcwall)
```

```
      TKhp = 242.0*Tcwall
      XNf = 1.5*12.0*10
      Xntubes = (12.0*Width)/3.5
      Xnexpip = 0.1*Xntubes
      XNpipes = Xntubes
      XNexpipes = Xnexpip
      XMW = Xmw
      Pman = Pin
      Tman = Tin
      RHOcan = 505.0
      RHObraze = 535.0
      THICKman = 0.005208 + (0.000052*Pin)
      Wman = WDOTT
      GAP = 0.5
 1208 CONTINUE
      Amin = (Gap*Hman)-(Dcan-Hman)
      DO 1209 I = 1,100,1
      Vman = Wman/(Rho*Amin)
      ERROR4 = 1.0 - (Vliqman/Vman)
      Amin = Amin*(1.0+(0.8*ERROR4))
C     WRITE (6,*) 'Vman,ERROR4,Amin =', Vman, ERROR4, Amin
      IF (ABS(ERROR4).GT.0.01) THEN
      GO TO 1209
      ELSE
      GO TO 1210
      ENDIF
 1209 CONTINUE
 1210 Amin = Amin
      Hman = (Amin+Dcan)/(Gap+1.0)
      CALL HPMAN(Ifluid,Iflg2,Cman,Hman,Gap,Pitch,Dcan,Dhp,Rc,Rb,Tf,TKfi
     &n,TKcan,TKbraze,TKhp,XNf,XNpipes,XNexpipes,Xmw,Pin,Tin,RHOcan,RH
     &Obraze,THICKman,Wman,Qrad,XMANmas,DPman,DTfilm,XMNMAN)
      XN9 = 12.0
C     SET PIPE VELOCITY AT 30.0 FT/SEC TO DESIGN NAK PLUMBING SYSTEM
      CALL XNAKPR(Tman,RHO,CP,VIS,TK)
      Vpipe = 30.0
      Wpipe = Wman
      Dp = SQRT((183.346*Wpipe)/(Rho*Vpipe))
      SUMLEN = 60.0*(Qrad/50.0)
      THICKP = 0.10
      RHOPIP = 505.0
      THICKI = 4.0
      RHOINS = 24.0
      R9 = 4.0*Dp
C     WRITE (6,*) 'INPUTS FOR HRPIPE'
C     WRITE (6,*) 'Vpipe,Wpipe,Dp,SUMLEN =',Vpipe,Wpipe,Dp,SUMLEN
C     WRITE (6,*) '******************************'
      CALL HRPIPE(XN9,R9,Dp,SUMLEN,Vpipe,Tin,Pin,THICKP,RHOPIP,THICKI,
     &RHOINS,DPPIPE,PIPNAK,PIPMAS)

      Qrad = Qrad
      Trad = Tbar
```

```
      Xntubes = (12.0*Width)/3.5
      Xnexpip = 0.1*Xntubes
      Xlflat = 18.00
      Dhpipe = 1.0
      CALL RADFLG(Tbar,Ifluid,Imatl)
 1300 THETA = 0.0
      D2rad = Width/PI
      Thickm = 0.0
      Thickf = 0.050/12.0
      Thick = 0.003/12.0
      Em = 0.8
      Tkfin = 49.1
      Rhocoating = 0.0
      Rhofin = 113.0
      RHOarm = 113.0
      Xladiab = 0.0
      Xmchmas = 0.0
      PROB = 0.99
      GAM = 1.70
      ARSF = 1.70
      Earm = 10000000.0
      CONFIG = 1.0
      CALL TMEAN(Tin,DTman,DTfilm,Trad)
      CALL HRRAD(Qrad,Trad,Xntubes,Xnexpip,Xlflat,Dhpipe,Ifluid,Imatl,
     &Theta,D2rad,Thickm,Thickf,Thick,Em,IENflg,Halt,HINCL,Rsun,Yrlnch,
     &Alpha,Hap,HArad,TKfin,Rhocoating,Rhofin,RHOarm,Xladiab,CONFIG,
     &Xmchmas,PROB,GAM,ARSF,Earm,Time,Qrejected,Thickf2,Thickm2,
     &Aradiator,Aradeffect,Wthick2,Xnart2,Artid2,
     &Artwall2,Thick2,Xlevap2,Xladi2,Xlspec2,Xltot2,Xmpipes,Xmfluid,
     &Xmfin,Xmcoating,Xmarmor,Xmarmorid,Xstructure,
     &Xnetradmasst2,Wxl2)
C
C
      WDOTT = Wpipe
      CALL PUMP(Tin,WDOTT,DPPIPE,DPTUBE,DPman,DPLOOP,Phyd,XMPUMP)
C
      CALL VACMAS(Tin,PIPNAK,XMNMAN,XMNHEX,XMNVAC,XMVAC)
C
C
C
C
      WRITE (6,*) '*** HEAT REJECTION SYSTEM FOR A BRAYTON CYCLE SYSTEM
     &IN WHICH CYCLE WASTE HEAT IS REJECTED TO A PUMPED NaK LOOP FROM
     &THE CYCLE WORKING FLUID TO A HEAT PIPE COOLED NaK MANIFOLD ***'
      WRITE (6,*) '   '
      WRITE (6,*) 'INPUT FOR OPTION NUMBER 2'
      WRITE (6,*) '   '
      WRITE (6,*) 'INPUT FOLLOWING DATA INTO FILE *RADAT* TO RUN OPT #2'
      WRITE (6,*) '   '
C     DEFINE ORBIT
      WRITE (6,*) IENflg,Halt,HINCL,Rsun
      WRITE (6,*) Yrlnch,Time
```

```
      WRITE (6,*) '     '
C     DEFINE RADIATOR
      WRITE (6,*) GAM,ARSF,Earm,PROB
      WRITE (6,*) CONFIG,Xntubes,Xnexpip,Xlflat
      WRITE (6,*) Dhpipe,Ifluid,Imatl,Theta
      WRITE (6,*) D2rad,Thickm,Thickf,Thick
      WRITE (6,*) Em,Alpha,Hap,HArad
      WRITE (6,*) Tkfin,Rhocoating,Rhofin,RHOarm
      WRITE (6,*) Xladiab,Xmchmas
      WRITE (6,*) '     '
C     DEFINE HEAT SINK HEAT EXCHANGER
      WRITE (6,*) IHXflg,UEST,TCIN,TCOUT
      WRITE (6,*) WDOTS,AMWS,TINS,DENINS
      WRITE (6,*) DENSSH,DTUBE,PR,TTUBE
      WRITE (6,*) ANPLATES,WDOTT,AKTUBE
      WRITE (6,*) '     '
C     DEFINE HEAT PIPE MANIFOLD
      WRITE (6,*) Iflg2,Hman,Gap,Pitch
      WRITE (6,*) Dcan,Dhp,Rc,Rb
      WRITE (6,*) Tf,TKfin,TKcan,TKbraze
      WRITE (6,*) TKhp,XNf,Xmw,RHOcan
      WRITE (6,*) RHObraze,THICKman,Wman
      WRITE (6,*) '     '
C     DEFINE PIPING
      WRITE (6,*) XN9,R9,Dp,SUMLEN
      WRITE (6,*) THICKP,RHOPIP,THICKI,RHOINS
      WRITE (6,*) '     '
      WRITE (6,*) 'C     IENflg,Halt,HINCL,Rsun'
      WRITE (6,*) 'C     Yrlnch,Time'
      WRITE (6,*) '     '
      WRITE (6,*) 'C     GAM,ARSF,Earm,PROB'
      WRITE (6,*) 'C     CONFIG,Xntubes,Xnexpip,Xlflat'
      WRITE (6,*) 'C     Dhpipe,Ifluid,Imatl,Theta'
      WRITE (6,*) 'C     D2rad,Thickm,Thickf,Thick'
      WRITE (6,*) 'C     Em,Alpha,Hap,HArad'
      WRITE (6,*) 'C     Tkfin,Rhocoating,Rhofin,RHOarm'
      WRITE (6,*) 'C     Xladiab,Xmchmas'
      WRITE (6,*) '     '
      WRITE (6,*) 'C     IHXflg,UEST,TCIN,TCOUT'
      WRITE (6,*) 'C     WDOTS,AMWS,TINS,DENINS'
      WRITE (6,*) 'C     DENSSH,DTUBE,PR,TTUBE'
      WRITE (6,*) 'C     ANPLATES,WDOTT,AKTUBE'
      WRITE (6,*) '     '
      WRITE (6,*) 'C     Iflg2,Hman,Gap,Pitch'
      WRITE (6,*) 'C     Dcan,Dhp,Rc,Rb'
      WRITE (6,*) 'C     Tf,TKfin,TKcan,TKbraze'
      WRITE (6,*) 'C     TKhp,XNf,Xmw,RHOcan'
      WRITE (6,*) 'C     RHObraze,THICKman,Wman'
      WRITE (6,*) '     '
      WRITE (6,*) 'C     XN9,R9,Dp,SUMLEN'
      WRITE (6,*) 'C     THICKP,RHOPIP,THICKI,RHOINS'
      WRITE (6,*) '     '
```

```
      CALL RADPRT(Qrad,Trad,Xntubes,Xnexpip,Xlflat,Dhpipe,Ifluid,I
     &matl,Theta,D2rad,Thickm,Thickf,Thick,Em,
     &Alpha,Hap,HArad,TKfin,Rhocoating,Rhofin,RHOarm,Xladiab,
     &Xmchmas,PROB,GAM,ARSF,Earm,Time,Qrejected,Thickf2,Thickm2,
     &Aradiator,Aradeffect,Wthick2,Xnart2,Artid2,
     &Artwall2,Thick2,Xlevap2,Xladi2,Xlspec2,Xltot2,Xmpipes,Xmfluid,
     &Xmfin,Xmcoating,Xmarmor,Xmarmorid,Xstructure,
     &Xnetradmasst2)
      CALL ORBPRT(IENflg,Halt,HINCL,Rsun,Yrinch)
C
      CALL HMWPRT(Iflg2,Hman,Gap,Pitch,XNpipes,Xnexpipes,Dcan,
     &Dhp,Rc,Rb,Tf,TKfin,TKcan,TKbraze,TKhp,XNf,RHOcan,RHObraze,
     &THICKman,Pin,Tin,Wman,Qrad,XMW,XMANmas,DPman,DTfilm,XMNMAN)
      WRITE (6,*) '    '
C
      CALL PIPPRT(XN9,R9,Dp,SUMLEN,Vpipe,Tin,Pin,THICKP,RHOPIP,
     &THICKI,RHOINS,DPPIPE,PIPNAK,PIPMAS)
      WRITE (6,*) '    '
      CALL HSHXPT(IHXflg,QDOT,THIN,THOUT,TCIN,TCOUT,WDOTS,DENSSH,
     &DTUBE,TTUBE,WDOTT,AKTUBE,DPSHELL,ANTUBES,DPTUBE,DOTL2,ALSHEL,
     &AMSHELL,AMPLATES,AMTUBES,ANETMASS,XMNHEX,HSHELL,AFRIC,UNEW,RETUBE,
     &THC,AMINSUL,AMHEADS,AMTSHT,AMSTRT)
      WRITE (6,*) '    '
C
      CALL PMPPRT(Tin,WDOTT,DPPIPE,DPTUBE,DPMAN,DPLOOP,Phyd,
     &XMPUMP)
      CALL VACPRT(XMNvac,XMVAC)
C
      WRITE (6,*) 'MASS SUMMARY FOR INDIRECT BRAYTON SYSTEM'
      WRITE (6,*) '    '
      WRITE (6,*) 'HEAT SINK HEAT EXCHANGER MASS (LBS)(DRY) =',ANETMASS
      WRITE (6,*) 'HEAT EXCHANGER NaK MASS (LBS) =',XMNHEX
      WRITE (6,*) 'NaK PIPING SYSTEM MASS (LBS)(DRY) =',PIPMAS
      WRITE (6,*) 'MASS OF NaK IN PIPING SYSTEM (LBS) =',PIPNAK
      WRITE (6,*) 'MASS OF EM PUMP (LBS) (WET) =',XMPUMP
      WRITE (6,*) 'HEAT PIPE/NaK MANIFOLD MASS (Lbs) (DRY) =',XMANmas
      WRITE (6,*) 'MASS OF NaK IN MANIFOLD (LBS) =',XMNMAN
      WRITE (6,*) 'EXPANSION COMPENSATOR MASS (LBS) (DRY) =',XMVAC
      WRITE (6,*) 'MASS OF NaK IN EXPANSION COMPENSATOR (LBS) =',XMNVAC
      WRITE (6,*) 'RADIATOR MASS (LBS) =',Xnetradmasst2
      XMSYST = ANETMASS + XMNHEX + PIPMAS + PIPNAK + XMPUMP + XMANmas
     & + XMNMAN + XMVAC + XMNVAC + Xnetradmasst2
      WRITE (6,*) '    '
      WRITE (6,*) 'INDIRECT BRAYTON SYSTEM MASS (LBS) (WET) =',XMSYST
      WRITE (6,*)
      STOP
C
 1400 Iprob=3
C
C
      DTman = Tin-Tout
      DTfilm = 50.0
```

```
      CALL Tmean(Tin,DTman,DTfilm,Tbar)
      Alpha = 0.5
      Nap = 1.0
      NArad = 2.0
      CALL HRTSNK(IENflg,Halt,HINCL,Rsun,Yrlnch,Alpha,Nap,NArad,Tsink)
C     WRITE (6,*) 'RESULTS FROM SIMPLIFIED OPTION #3'
C     WRITE (6,*) 'DTman,Tbar,Tsink =',DTman,Tbar,Tsink
      Em = 0.8
      Etarad = 0.65 + (0.0002*Tbar)
      Aradest = (3413.0*Qrad)/(0.1713E-08*Em*Etarad*((Tbar**4.0)-(Tsink*
     &*4.0)))
      Aactual = 0.5*Aradest
      DUMLEN = 10.0
      Width = Aactual/DUMLEN
C     WRITE (6,*) 'Etarad,Aradest,Aactual,Width =',Etarad,Aradest,Aactu
C    &al,Width
      Qrad = Qrad
      Trad = Tbar
      Xntubes = (12.0*Width)/2.0
      Xnexpip = 0.1*Xntubes
      Xlflat = 18.00
      Dhpipe = 1.0
      CALL RADFLG(Tbar,Ifluid,Imatl)
C     WRITE (6,*) 'Qrad,Trad,Xntubes,Xnexpip,Ifluid,Imatl =',Qrad,Trad,
C    &Xntubes,Xnexpip,Ifluid,Imatl
 1500 THETA = 0.0
      Cman = Width
      THICKins = 4.0/12.0
      Tbraze = 0.002/12.0
      TKcan = 10.0
      TKbraze = 35.0
      TKhp = 10.0
      XNpipes = Xntubes
      XNexpipes = Xnexpip
      RHOpip = 505.0
      RHOcan = 505.0
      RHObraze = 525.0
      THICKman = 0.0625/12.0
      Thtpip = 0.020/12.0
      Xin = 1.0
C     WRITE (6,*) 'INPUT TO 1ST CALL TO KPRP (Xin,Pin,Tin) =',Xin,Pin,Ti
C    &n
      CALL KPRP(Xin,Pin,Tin,DL,DV,HF,HG,HFG,SF,SG,SFG,VF,VG)
C     WRITE (6,*) 'OUTPUT FROM KPRP (DL,DV,HF,HFG,SF,SG,SFG,VF,VG) =',
C    &DL, DV, HF, HFG, SF, SG, SFG, VF, VG
      CALL KTRN(Xin,Pin,Tin,Cl,Cv,TKl,TKv,Prl,Prv,VL,Vv)
      Tsat = (-7633.6)/(ALOG10(Pin)-5.279)
      IF (Tin.GT.Tsat) DHNET=Cv*(Tin-Tsat)+HFG+Cl*(Tsat-Tout)
      IF (Tin.EQ.Tsat) DHNET=(Xin*HFG)+Cl*(Tsat-Tout)
      IF (Tin.LT.Tsat) DHNET=Cl*(Tsat-Tout)
      Wman = 3413.0*Qrad/DHNET
      Gap = 3.0/12.0
```

```
      Hmen = 2.0
      DPlimit = 0.05*Pin
      DTlimit = DTfilm
C     WRITE (6,*) 'Wmen,DPlimit =',Wmen,DPlimit
C     WRITE (6,*) 'DTlimit =',DTlimit
 1504 CONTINUE
      CALL CONMAN(Ifluid,Cmen,Hmen,Gap,THICKins,RHOins,Tout,
     &Tbraze,TKcan,TKbraze,TKhp,XNpipes,XNexpipes,Pin,Tin,Xin,RHOpip,
     &RHOcan,RHObraze,THICKmen,Thtpip,Wmen,Qrad,XMANmes,DPmen,DTFsup,
     &Ar,Gt,V,Dh,Cgt,Rel,Hl,Xtt,Rev,
     &DTFcon,DTFsub,DTfilmx)
      DTEROR = 1.0 - (DTlimit/DTfilmx)
      Hmen = Hmen*(1.0+(0.1*DTEROR))
C     WRITE (6,*) 'DTEROR,Hmen =',DTEROR,Hmen
      IF (ABS(DTEROR).GT.0.01) THEN
      GO TO 1504
      ELSE
      GO TO 1506
      ENDIF
 1506 Hmen = Hmen
C     WRITE (6,*) '*****************************************************'

 1508 CONTINUE
      CALL CONMAN(Ifluid,Cmen,Hmen,Gap,THICKins,RHOins,Tout,
     &Tbraze,TKcan,TKbraze,TKhp,XNpipes,XNexpipes,Pin,Tin,Xin,RHOpip,
     &RHOcan,RHObraze,THICKmen,Thtpip,Wmen,Qrad,XMANmes,DPmen,DTFsup,
     &Ar,Gt,V,Dh,Cgt,Rel,Hl,Xtt,Rev,
     &DTFcon,DTFsub,DTfilmx)
      DPEROR = 1.0 - (DPlimit/DPmen)
      Gap=Gap*(1.0+(0.002*DPEROR))
C     WRITE (6,*) 'DPEROR,GAP,Hmen =',DPEROR,GAP,Hmen
      IF (ABS(DPEROR).GT.0.01) THEN
      GO TO 1508
      ELSE
      GO TO 1510
      ENDIF
 1510 Gap = Gap
      CALL CONMAN(Ifluid,Cmen,Hmen,Gap,THICKins,RHOins,Tout,
     &Tbraze,TKcan,TKbraze,TKhp,XNpipes,XNexpipes,Pin,Tin,Xin,RHOpip,
     &RHOcan,RHObraze,THICKmen,Thtpip,Wmen,Qrad,XMANmes,DPmen,DTFsup,
     &Ar,Gt,V,Dh,Cgt,Rel,Hl,Xtt,Rev,
     &DTFcon,DTFsub,DTfilm)
      Xlflat = 12.0*Hmen
      D2rad = Width/PI
      Thickm = 0.0
      Thickf = 0.050/12.0
      Thick = 0.003/12.0
      Em = 0.8
      Tkfin = 49.1
      Rhocoating = 0.0
      Rhofin = 113.0
      RHOarm = 113.0
```

```
      Xladiab = 0.0
      Xmchmas = 0.0
      PROB = 0.99
      GAM = 1.70
      ARSF = 1.70
      Earm = 10000000.0
      CONFIG = 1.0
      CALL TMEAN(Tin,DTman,DTfilm,Trad)
C     WRITE (6,*) 'Trad, Ifluid, Imatl =',Trad,Ifluid,Imatl
C     WRITE (6,*) 'Qrad,Trad,Xntubes,Xnexpip,Xlflat,Dhpipe,Ifluid,Imatl,
C    &Theta,D2rad,Thickm,Thickf,Thick,Em,IENflg,Halt,Hincl,Rsun,Yrlnch,
C    &Alpha,Hap,HArad,Tkfin ===',Qrad,Trad,Xntubes,Xnexpip,Xlflat,Dhpipe
C    &,Ifluid,Imatl,Theta,D2rad,Thickm,Thickf,Thick,Em,IENflg,Halt,Hincl
C    &,Rsun,Yrlnch,Alpha,Hap,HArad,Tkfin
      CALL HRRAD(Qrad,Trad,Xntubes,Xnexpip,Xlflat,Dhpipe,Ifluid,Imatl,
     &Theta,D2rad,Thickm,Thickf,Thick,Em,IENflg,Halt,HINCL,Rsun,Yrlnch,
     &Alpha,Hap,HArad,TKfin,Rhocoating,Rhofin,RHOarm,Xladiab,CONFIG,
     &Xmchmas,PROB,GAM,ARSF,Earm,Time,Qrejected,Thickf2,Thickm2,
     &Aradiator,Aradeffect,Wthick2,Xnart2,Artid2,
     &Artwall2,Thick2,Xlevap2,Xladi2,Xlspec2,Xltot2,Xmpipes,Xmfluid,
     &Xmfin,Xmcoating,Xmarmor,Xmarmorid,Xstructure,
     &Xnetradmasst2,Wxl2)
C
C
      WRITE (6,*) '*** HEAT REJECTION SYSTEM FOR A RANKINE CYCLE SYSTEM
     &IN WHICH CYCLE WASTE HEAT IS REJECTED DIRECTLY FROM THE CYCLE WORK
     &ING FLUID IN A HEAT PIPE COOLED CONDENSER ***'
      WRITE (6,*) '   '
      WRITE (6,*) 'INPUT FOR OPTION NUMBER 3'
      WRITE (6,*) '   '
      WRITE (6,*) 'INPUT FOLLOWING DATA INTO FILE *RADAT* TO RUN OPT #3'
      WRITE (6,*)
C     DEFINE ORBIT
      WRITE (6,*) IENflg,Halt,HINCL,Rsun
      WRITE (6,*) Yrlnch,Time
      WRITE (6,*) '     '
C     DEFINE RADIATOR
      WRITE (6,*) GAM,ARSF,Earm,PROB
      WRITE (6,*) CONFIG,Xntubes,Xnexpip,Xlflat
      WRITE (6,*) Dhpipe,Ifluid,Imatl,Theta
      WRITE (6,*) D2rad,Thickm,Thickf,Thick
      WRITE (6,*) Em,Alpha,Hap,HArad
      WRITE (6,*) Tkfin,Rhocoating,Rhofin,RHOarm
      WRITE (6,*) Xladiab,Xmchmas
      WRITE (6,*) '     '
C     DEFINE CONDENSER
      WRITE (6,*) Cman,Wman,Gap,THICKins
      WRITE (6,*) RHOins,Tout,Tbraze,TKcan
      WRITE (6,*) TKbraze,TKhp,Pin,Tin
      WRITE (6,*) Xin,RHOpip,RHOcan,RHObraze
      WRITE (6,*) THICKman,Thtpip,Wman
      WRITE (6,*) '     '
```

```
C
      WRITE (6,*) 'C      IENflg,Halt,HINCL,Rsun'
      WRITE (6,*) 'C      Yrinch,Time'
      WRITE (6,*) '     '
      WRITE (6,*) 'C      GAM,ARSF,Earm,PROB'
      WRITE (6,*) 'C      CONFIG,Xntubes,Xnexpip,Xlflat'
      WRITE (6,*) 'C      Dhpipe,Ifluid,Imatl,Theta'
      WRITE (6,*) 'C      D2rad,Thickm,Thickf,Thick'
      WRITE (6,*) 'C      Em,Alpha,Hap,HArad'
      WRITE (6,*) 'C      Tkfin,Rhocoating,Rhofin,RHOarm'
      WRITE (6,*) 'C      Xladiab,Xmchmas'
      WRITE (6,*) '     '
      WRITE (6,*) 'C      Cman,Hman,Gap,THICKins'
      WRITE (6,*) 'C      RHOins,Tout,Tbraze,TKcan'
      WRITE (6,*) 'C      TKbraze,TKhp,Pin,Tin'
      WRITE (6,*) 'C      Xin,RHOpip,RHOcan,RHObraze'
      WRITE (6,*) 'C      THICKman,Thtpip,Wman'
      WRITE (6,*) '     '
      CALL RADPRT(Qrad,Trad,Xntubes,Xnexpip,Xlflat,Dhpipe,Ifluid,I
     &matl,Theta,D2rad,Thickm,Thickf,Thick,Em,
     &Alpha,Hap,HArad,TKfin,Rhocoating,Rhofin,RHOarm,Xladiab,
     &Xmchmas,PROB,GAM,ARSF,Earm,Time,Qrejected,Thickf2,Thickm2,
     &Aradiator,Aradeffect,Wthick2,Xnart2,Artid2,
     &Artwall2,Thick2,Xlevap2,Xladi2,Xlspec2,Xltot2,Xmpipes,Xmfluid,
     &Xmfin,Xmcoating,Xmarmor,Xmarmorid,Xstructure,
     &Xnetradmasst2)
      CALL ORBPRT(IENflg,Halt,HINCL,Rsun,Yrinch)
C
      CALL CONPRT(Ar,Gt,V,Dh,Cgt,Rel,Hl,Xtt,Rev,
     &Ifluid,Cman,Hman,Gap,THICKins,RHOins,Tout,
     &Tbraze,TKcan,TKbraze,TKhp,XNpipes,XNexpipes,Pin,Tin,Xin,RHOpip,
     &RHOcan,RHObraze,THICKman,Thtpip,Wman,Qrad,XMANmas,DPman,
     &DTfilm)
C
C
      WRITE (6,*) 'MASS SUMMARY FOR CONDENSING RANKINE SYSTEM'
      WRITE (6,*) '     '
      WRITE (6,*) 'HEAT PIPE COOLED CONDENSER MASS (Lbs) =',XMANmas
      WRITE (6,*) 'RADIATOR MASS (LBS) =',Xnetradmasst2
      XMSYST = XMANmas + Xnetradmasst2
      WRITE (6,*) '     '
      WRITE (6,*) 'CONDENSING RANKINE SYSTEM MASS (LBS) =',XMSYST
      WRITE (6,*) '     '
C
      STOP
      END
```

```
C
C
C
      SUBROUTINE RADFLG(Tbar,Ifluid,Imatl)
      IF (Tbar.LT.450.0) THEN
      WRITE (6,*) 'RADIATOR TEMPERATURE TOO LOW TO CONTINUE CALCULATION'
      STOP
      ELSE
      GO TO 1410
      ENDIF
 1410 IF (Tbar.LT.549.0) THEN
      Ifluid = 9
      Imatl = 4
      GO TO 1500
      ELSE
      GO TO 1420
      ENDIF
 1420 IF (Tbar.LT.1008.0) THEN
      Ifluid = 2
      Imatl = 8
      GO TO 1500
      ELSE
      GO TO 1430
      ENDIF
 1430 IF (Tbar.LT.1350.0) THEN
      Ifluid = 8
      Imatl = 5
      GO TO 1500
      ELSE
      GO TO 1440
      ENDIF
 1440 IF (Tbar.LT.1710.0) THEN
      Ifluid = 5
      Imatl = 7
      GO TO 1500
      ELSE
      GO TO 1450
      ENDIF
 1450 IF (Tbar.LT.2070.0) THEN
      Ifluid = 3
      Imatl = 7
      GO TO 1500
      ELSE
      GO TO 1460
      ENDIF
 1460 IF (Tbar.LT.3240.0) THEN
      Ifluid = 4
      Imatl = 2
      GO TO 1500
      ELSE
      WRITE (6,*) 'TEMPERATURE ABOVE MAXIMUM HEAT PIPE OPERATING LIMIT'
      STOP
```

```
      ENDIF
 1500 RETURN
      END
```

```
C
C
C
      SUBROUTINE RADPRT(Qrad,Trad,Xntubes,Xnexpip,Xlflat,Dhpipe,Ifluid,I
     &mtl,Theta,D2rad,Thickm,Thickf,Thick,Em,
     &Alpha,Hap,HArad,TKfin,Rhocoating,Rhofin,RHOarm,Xladiab,
     &Xmchmas,PROB,GAM,ARSF,Earm,Time,Qrejected,Thickf2,Thickm2,
     &Aradiator,Aradeffect,Wthick2,Xnart2,Artid2,
     &Artwall2,Thick2,Xlevap2,Xladi2,Xlspec2,Xltot2,Xmpipes,Xmfluid,
     &Xmfin,Xmcoating,Xmarmor,Xmarmorid,Xstructure,
     &Xnetradmasst2)
      WRITE (6,*) '    '
      WRITE (6,*) 'RADIATOR DEFINITION INPUTS'
      WRITE (6,*) '    '
      WRITE (6,*) 'GAMMA =',GAM
      WRITE (6,*) 'ARSF = ',ARSF
      WRITE (6,*) 'ARMOR DENSITY (Lbs/cu-Ft) =',RHOARM
      WRITE (6,*) 'YOUNGS MODULUS OF ARMOR (Lbs/sq-In) =',Earm
      WRITE (6,*) 'EXPOSURE TIME OR MISSION DURATION (Secs) =',Time
      WRITE (6,*) 'NON-PUNCTURE PROBABILITY =',PROB
      WRITE (6,*) 'RADIATOR HEAT REJECTION RATE (KWt) =',Qrad
      WRITE (6,*) 'AVERAGE RADIATOR SURFACE TEMPERATURE (deg-R) =',Trad
      WRITE (6,*) 'NUMBER OF PRIMARY HEAT PIPE IN RADIATOR =',Xntubes
      WRITE (6,*) 'NUMBER OF REDUNDENT HEAT PIPES=',Xnexpip
      WRITE (6,*) 'HEAT PIPE EVAPORATOR LENGTH (INCHES)=',Xlflat
      WRITE (6,*) 'HEAT PIPE INSIDE DIAMETER (INCHES)=',Dhpipe
      WRITE (6,*) 'HEAT PIPE WORKING FLUID ID NUMBER=',Ifluid
      WRITE (6,*) 'HEAT PIPE LINER MATERIAL ID NUMBER=',Imatl
      WRITE (6,*) 'CONE ANGLE FOR CONICAL RADIATOR (DEGREES)=',Theta
      WRITE (6,*) 'MANIFOLD DIAMETER FOR CONICAL RADIATOR OR MANIFOLD LE
     &NGTH DIVIDED BY 3.141593 FOR FLAT PLATE (FEET) =',D2RAD
      WRITE (6,*) 'RADIATOR EMISSIVITY CONTROL COATING THICK.(FEET)=',Th
     &ickm
      WRITE (6,*) 'RADIATOR FIN THICKNESS (FEET)=',Thickf
      WRITE (6,*) 'HEAT PIPE WALL or LINER THICKNESS (FEET)=',Thick
      WRITE (6,*) 'RADIATOR SURFACE EMISSIVITY=',Em
      WRITE (6,*) 'RADIATOR SURFACE ABSOPTIVITY=',Alpha
      WRITE (6,*) 'RADIATOR PROJ. AREA (FRACT. OF TOT.)=',Hap
      WRITE (6,*) 'RADIATOR ACTUAL AREA (FRACTION)=',HArad
      WRITE (6,*) 'THERMAL COND. OF FIN MATERIAL (BTU/HR-FT-R)=',Tkfin
      WRITE (6,*) 'COATING MATERIAL DENSITY (LB/cu-FT)=',Rhocoating
      WRITE (6,*) 'FIN MATERIAL DENSITY (LB/cu-FT)=',Rhofin
      WRITE (6,*) 'LENGTH OF ADIABATIC PORTION OF THE HEAT PIPE (FEET)='
     &,Xladiab
      WRITE (6,*) 'MASS OF RADIATOR DEPLOYMENT MECHANISM (LBS)=',Xmchmas
      WRITE (6,*) '    '
C
 2555 FORMAT (6F12.4)
      WRITE (*,*) '     '
      WRITE (*,*) 'TOTAL HEAT    AVERAGE      Radiator     Emissivity'
      WRITE (*,*) 'REJECTED      EVAPORATOR     FIN         Coating '
      WRITE (*,*) ' (KWt)        TEMP (R)     Thick (In)   Thick (In)'
```

```
      WRITE (*,2555) Qrejected,Trad,Thickf2,Thickm2
      WRITE (*,*) '      '
      WRITE (*,*) ' Actual        Effective'
      WRITE (*,*) '(one-side)     Radiator'
      WRITE (*,*) 'Area(sq-Ft.)  Area(sq-Ft)'
      WRITE (*,2555) Aradiator,Aradeffect
      WRITE (*,*) '      '
      WRITE (*,*) 'HEAT PIPE DESIGN DETAILS - DIMS in INCHES'
      WRITE (*,*) '     Pipe ID    Wick Thick   #Arteries     Art ID
     1   Art Wall    Pipe wall'
      WRITE (6,2555) Dhpipe,Wthick2,Xnart2,Artid2,Artwall2,Thick2
      WRITE (*,*) 'Evap Length   Adi Length  Cond Length  Total Length'
      WRITE (*,2555) Xlevap2,Xladi2,Xlspec2,Xltot2
      WRITE (*,*) '      '
      WRITE (*,*) 'RADIATOR MASS BREAKDOWN - Mass in Lbs.'
      WRITE (*,*) 'Heat Pipes    Fluids     FINS     Emiss. Cont.'
      WRITE (*,2555) Xmpipes,Xmfluid,Xmfin,Xmcoating
      WRITE (*,*) 'O.D.ARMOR   I.D.ARMOR   Structure  TOTAL RADIATOR '
      WRITE (*,2555) Xmarmor,Xmarmorid,Xstructure,Xnetradmasst2
      RETURN
      END
```

```
C
C
C
      SUBROUTINE ORBPRT(IENflg,Halt,NINCL,Rsun,Yrlnch)
      WRITE (6,*) '   '
      WRITE (6,*) 'IENflg (ORBIT SELECTION) =',IENflg
      WRITE (6,*) '      IENflg=1, EARTH ORBIT (LEO-GEO)'
      WRITE (6,*) '      IENflg=2, SOLAR ORBIT (0.5 to 2.0 AU)'
      WRITE (6,*) 'ORBIT ALTITUDE (KM) =',Halt
      WRITE (6,*) 'ORBIT INCLINATION ANGLE (Degrees) =',NINCL
      WRITE (6,*) 'DISTANCE FROM SUN (AU) =',Rsun
      WRITE (6,*) 'YEAR SATELLITE LAUNCHED =',Yrlnch
      WRITE (6,*) '    '
      RETURN
      END
```

```
C
C
C
      SUBROUTINE MMNPRT(Iflg2,Hman,Gap,Pitch,XNpipes,Xnexpipes,Dcan,
     &Dhp,Rc,Rb,Tf,TKfin,TKcan,TKbraze,TKhp,XNf,RHOcan,RHObraze,
     &THICKman,Pman,Tman,Wman,Qrad,XMW,XMANmas,DPman,DTfilm,XMNMAN)
C
      WRITE (6,*) 'HEAT PIPE COOLED MANIFOLD DEFINITION VARIABLES'
      WRITE (6,*) '    '
      WRITE (6,*) 'Iflg2 =',Iflg2
      WRITE (6,*) 'MANIFOLD HEIGHT (Feet)=',Hman
      WRITE (6,*) 'MANIFOLD WIDTH (Feet)=',Gap
      WRITE (6,*) 'DIST. BETWN CAN (HEAT PIPES) C-LINES (Feet)=',Pitch
      WRITE (6,*) 'NUMBER OF HEAT PIPES IN RADIATOR=',XNpipes
      WRITE (6,*) 'NUMB. OF REDUNDENT HEAT PIPES IN RADIATOR=',Xnexpipes
      WRITE (6,*) 'OUTSIDE DIAMETER OF MANIFOLD BRAZE CANS (Feet)=',Dcan
      WRITE (6,*) 'INSIDE DIAMETER OF HEAT PIPE (Feet)=',Dhp
      WRITE (6,*) 'MANIFOLD BRAZE CAN INSIDE RADIUS (Feet)=',Rc
      WRITE (6,*) 'BRAZE JOINT INSIDE RADIUS (Feet)=',Rb
      WRITE (6,*) 'FIN THICKNESS (Feet)=',Tf
      WRITE (6,*) 'THERM. COND. OF FIN MATERIAL (BTU/Hr-Ft-R)=',TKfin
      WRITE (6,*) 'THERM. COND. OF MANIFOLD CAN MATERIAL (B/HFR)=',TKcan
      WRITE (6,*) 'THERM. COND. OF MANIF. BRAZE ALLOY (B/HFR)=',TKbraze
      WRITE (6,*) 'THERM. COND. OF HEAT PIPE WALL MATL (B/HFR)=',TKhp
      WRITE (6,*) 'TOTAL NUMBER OF FINS FOR THE MANIFOLD HEIGHT=',XNf
      WRITE (6,*) 'DENSITY OF MANIFOLD MATERIAL (Lb/cu-Ft)=',RHOcan
      WRITE (6,*) 'DENSITY OF BRAZE MATERIAL (Lb/cu-Ft)=',RHObraze
      WRITE (6,*) 'MANIFOLD MATERIAL THICKNESS (Feet)=',THICKman
      WRITE (6,*) 'MANIFOLD INLET PRESSURE (PSIA)=',Pman
      WRITE (6,*) 'MANIFOLD INLET TEMPERATURE (deg-R)=',Tman
      WRITE (6,*) 'MANIFOLD FLOWRATE (LBS/HR)=',Wman
      WRITE (6,*) 'MANIFOLD AND RADIATOR HEAT LOAD (BTU/HR)=',Qrad
      WRITE (6,*) 'MOLECULAR WEIGTH OF MANIFOLD WORKING FLUID=',XMW
      WRITE (6,*) '    '
      WRITE (6,*) 'MANIFOLD PRESSURE DROP (PSID) =',DPman
      WRITE (6,*) 'MANIFOLD FILM TEMPERATURE DROP (deg-R) =',DTfilm
      WRITE (6,*) 'NAK INVENTORY MASS (Lbs) =',XMNMAN
      WRITE (6,*) 'NET MASS OF HEAT PIPE MANIFOLD (Lbs) =',XMANmas
      WRITE (6,*) '    '
C
      RETURN
      END
```

```
C
C
C
      SUBROUTINE DUCPRT(XN9,R9,Dp,SUMLEN,Vpipe,TGAS,PGAS,THICKP,RHOPIP,
     &THICKI,RHOINS,XMW,DPDUCT,DUCMAS)
C
      WRITE (6,*) 'DUCTING INPUT VARIABLES'
      WRITE (6,*) '    '
      WRITE (6,*) 'NUMB. OF 90 DEG. ELBOWS OR EQUIV.=',XN9
      WRITE (6,*) 'AVERAGE RADIUS FOR 90 DEGREE ELBOWS (INCHES)=',R9
      WRITE (6,*) 'INSIDE DUCT DIAMETER (INCHES)=',Dp
      WRITE (6,*) 'TOTAL LENGTH OF DUCT SYSTEM (INCHES)=',SUMLEN
      WRITE (6,*) 'GAS VELOCITY IN DUCTS (FT/SEC)=',Vpipe
      WRITE (6,*) 'GAS TEMPERATURE (deg-R)=',TGAS
      WRITE (6,*) 'GAS PRESSURE (psia)=',PGAS
      WRITE (6,*) 'DUCT WALL THICKNESS (INCHES)=',THICKP
      WRITE (6,*) 'DUCT WALL DENSITY (LB/cu-FT)=',RHOPIP
      WRITE (6,*) 'DUCT INSULATION THICKNESS (INCHES)=',THICKI
      WRITE (6,*) 'DUCT INSULATION DENSITY (LB/cu-FT)=',RHOINS
      WRITE (6,*) 'GAS MOLECULAR WEIGHT=',XMW
      WRITE (6,*) 'DUCT SYSTEM PRESSURE DROP (PSID)=',DPDUCT
      WRITE (6,*) 'DUCT SYSTEM MASS (LBS)=',DUCMAS
C
      RETURN
      END
```

```
C
C
C
      SUBROUTINE PIPPRT(XN9,R9,Dp,SUMLEN,Vpipe,Tnak,Pnak,THICKP,RHOPIP,
     &THICKI,RHOINS,DPPIPE,PIPNAK,PIPMAS)
C
      WRITE (6,*) 'PIPING DEFINITION VARIABLES'
      WRITE (6,*) '    '
      WRITE (6,*) 'NUMB. OF 90 DEG. ELBOWS OR EQUIV.=',XN9
      WRITE (6,*) 'AVERAGE RADIUS FOR 90 DEGREE ELBOWS (INCHES)=',R9
      WRITE (6,*) 'INSIDE PIPE DIAMETER (INCHES)=',Dp
      WRITE (6,*) 'TOTAL LENGTH OF PIPE SYSTEM (INCHES)=',SUMLEN
      WRITE (6,*) 'NAK VELOCITY IN PIPES (FT/SEC)=',Vpipe
      WRITE (6,*) 'NAK TEMPERATURE (deg-R)=',Tnak
      WRITE (6,*) 'NAK PRESSURE (psia)=',Pnak
      WRITE (6,*) 'PIPE WALL THICKNESS (INCHES)=',THICKP
      WRITE (6,*) 'PIPE WALL DENSITY (LB/cu-FT)=',RHOPIP
      WRITE (6,*) 'PIPE INSULATION THICKNESS (INCHES)=',THICKI
      WRITE (6,*) 'PIPE INSULATION DENSITY (LB/cu-FT)=',RHOINS
      WRITE (6,*) 'PIPE SYSTEM PRESSURE DROP (PSID)=',DPPIPE
      WRITE (6,*) 'PIPE SYSTEM MASS (LBS)=',PIPMAS
      WRITE (6,*) 'PIPE SYSTEM NaK MASS (LBS) =',PIPNAK
      WRITE (6,*) '   '
C
      RETURN
      END
```

```
C
C
C
      SUBROUTINE HSHXPT(IHXflg,QDOT,THIN,THOUT,TCIN,TCOUT,WDOTS,DENSSH,
     &DTUBE,TTUBE,WDOTT,AKTUBE,DPSHELL,ANTUBES,DPTUBE,DOTL2,ALSHEL,
     &AMSHELL,AMPLATES,AMTUBES,AMETMASS,XMNHEX,HSHELL,AFRIC,UNEW,RETUBE,
     &THC,AMINSUL,AMHEADS,AMTSHT,AMSTRT)
      WRITE (6,*) '   '
      WRITE (6,*) 'HEAT SOURCE/SINK HEAT EXCHANGER DEFINITION'
      WRITE (6,*) '   '
      WRITE (6,*) 'TUBE SIDE FLUID FLAG =',IHXflg
      WRITE (6,*) 'Heat Rate or Duty (BTU/Hr) =',QDOT
      WRITE (6,*) 'HOT SIDE Inlet Temperature (R)=',THIN
      WRITE (6,*) 'HOT SIDE Outlet Temperature (R)=',THOUT
      WRITE (6,*) 'COLD SIDE Inlet Temperature (R)=',TCIN
      WRITE (6,*) 'COLD SIDE Outlet Temperature (R)=',TCOUT
      WRITE (6,*) 'SHELL SIDE FLUID Flowrate (Lbs/Sec)=',WDOTS/3600.0
      WRITE (6,*) 'SHELL MATERIAL Density (Lbs/Ft^3)=',DENSSH
      WRITE (6,*) 'INSIDE TUBE Diameter (Inches)=',DTUBE
      WRITE (6,*) 'TUBE Wall Thickness (Inches)=',TTUBE
      WRITE (6,*) 'TUBE -SIDE Fluid Flowrate (Lbs/Sec)=',WDOTT
      WRITE (6,*) 'TUBE Wall Thermal Conductivity (BTU/Hr-Ft-R)=',AKTUBE
      WRITE (6,*) 'SHELLSIDE DP (PSID) =',DPSHELL
      WRITE (6,*) 'SHELLSIDE H (BTU/HR-sqFT-R)=',HSHELL
      WRITE (6,*) 'FRIC-FAC =',AFRIC
      WRITE (6,*) 'UNEW (BTU/HR-sqFT-R) =',UNEW
      WRITE (6,*) 'NUMBER OF TUBES IN BUNDLE =',ANTUBES
      WRITE (6,*) 'Tube Side Reynolds Number =',RETUBE
      WRITE (6,*) 'Tube Side Pressure Drop (PSID) =',DPTUBE
      WRITE (6,*) 'Tube Side Hg (BTU/Hr-sq.Ft-R) =',THC
      WRITE (6,*) 'TUBE WALL THICKNESS (Inches) =',TTUBE
      WRITE (6,*) 'DOTL2 (Inches) =',DOTL2
      WRITE (6,*) 'LENGTH (Inches) =',ALSHEL
      WRITE (6,*) '     '
      WRITE (6,*) 'INSULATION MASS (Lbs) =',AMINSUL
      WRITE (6,*) 'HEAD MASS (Lbs) =',AMHEADS
      WRITE (6,*) 'SHELL MASS (Lbs) =',AMSHELL
      WRITE (6,*) 'PLATE MASS (Lbs) =',AMPLATES
      WRITE (6,*) 'TUBE SHEETS MASS (Lbs) =',AMTSHT
      WRITE (6,*) 'TUBE MASS (Lbs) =',AMTUBES
      WRITE (6,*) 'STRUCTURE AND BRACKETS MASS (Lbs) =',AMSTRT
      WRITE (6,*) 'MASS OF NaK IN H-X (LBS) =',XMNHEX
      WRITE (6,*) 'Net Mass of Shell and Tube Unit(DRY)(Lbs)=',AMETMASS
C
      RETURN
      END
```

```
C
C
C
      SUBROUTINE PMPPRT(Tnak,Wnak,DPPIPE,DPHX,DPMANIF,DPLOOP,Phyd,
     &XMPUMP)
C
      WRITE (6,*) '    '
      WRITE (6,*) 'NaK PUMP DEFINITION'
      WRITE (6,*) '    '
      WRITE (6,*) 'NAK INLET TEMPERATURE (deg-R)=',Tnak
      WRITE (6,*) 'NAK FLOWRATE (LBS/SEC)=',Wnak
      WRITE (6,*) 'PIPING SYSTEM PRESSURE DROP (PSID)=',DPPIPE
      WRITE (6,*) 'NAK SIDE HEAT EXCHANGER PRESSURE DROP (PSID)=',DPHX
      WRITE (6,*) 'NAK MANIFOLD PRESSURE DROP (PSID)=',DPMANIF
      WRITE (6,*) 'NaK LOOP PRESSURE DROP (PSID) =',DPLOOP
      WRITE (6,*) 'NaK LOOP PUMP POWER REQUIRED (HYDRAULIC) (WATTS) =',
     &Phyd
      WRITE (6,*) 'E-M PUMP MASS (DRY) (LBS) =',XMPUMP
C
      RETURN
      END
```

```
C
      SUBROUTINE VACPRT(XMNvac,XMVAC)
      WRITE (6,*) '     '
      WRITE (6,*) 'NAK LOOP EXPANSION COMPENSATOR DEFINED'
      WRITE (6,*) '     '
      WRITE (6,*) 'VOLUME ACCUMULATOR Nak MASS (Lbs) =',XMNvac
      WRITE (6,*) 'VOLUME ACCUMULATOR MASS (WET) (Lbs) =',XMVAC
C
      RETURN
      END
```

```
C
C
      SUBROUTINE CONPRT(Ar,Gt,V,Dh,Cgt,Rel,Hl,Xtt,Rev,
     &Ifluid,Cman,Hman,Gap,THICKins,RHOins,Tout,
     &Tbraze,TKcan,TKbraze,TKhp,XNpipes,XNexpipes,Pin,Tin,Xin,RHOpip,
     &RHOcan,RHObraze,THICKman,Thtpip,Wman,Qrad,XMANmas,DPman,
     &DTfilm)
C
      WRITE (6,*) 'HEAT PIPE COOLED CONDENSER DESCRIPTION'
      WRITE (6,*) '    '
      WRITE (6,*) 'MANIFOLD FLAT LENGTH (Ft) =',Cman
      WRITE (6,*) 'MANIFOLD HEIGHT (Ft) =',Hman
      WRITE (6,*) 'AVERAGE MANIFOLD COND. SURF. SPACE(Gap)(Ft) =',Gap
      WRITE (6,*) 'MANIFOLD INSULATION THICKNESS (Ft) =',THICKins
      WRITE (6,*) 'MANIFOLD INSULATION DENSITY (Lbs/cu-Ft) =',RHOins
      WRITE (6,*) 'NUMBER OF PRIMARY HEAT PIPES ATTACHED TO COOL CONDENS
     &ER SURFACE =',XNpipes
      WRITE (6,*) 'NUMBER OF REDUNDENT HEAT PIPES USED TO COOL CONDENSER
     & SURFACE =',XNexpipes
      WRITE (6,*) 'MANIFOLD WALL MATERIAL THICKNESS (Ft) =',THICKman
      WRITE (6,*) 'MANIFOLD-HEAT PIPE BRAZE MATERIAL THICKNESS (Ft) =',
     &Tbraze
      WRITE (6,*) 'HEAT PIPE WALL THICKNESS (Ft) =',Thtpip
      WRITE (6,*) 'MANIFOLD WALL MAT. THERMAL COND. (B/HFR) =',TKcan
      WRITE (6,*) 'BRAZE MAT. THERMAL COND. (B/HFR) =',TKbraze
      WRITE (6,*) 'HEAT PIPE WALL MAT. THERMAL COND. (B/HFR) =',TKhp
      WRITE (6,*) 'MANIFOLD WALL MATERIAL DENSITY (Lb/cu-Ft) =',RHOcan
      WRITE (6,*) 'BRAZE MATERIAL DENSITY (Lb/cu-Ft) =',RHObraze
      WRITE (6,*) 'HEAT PIPE WALL MATERIAL DENSITY (Lb/cu-Ft) =',RHOpip
      WRITE (6,*) 'HEAT PIPE WORKING FLUID NUMBER =',Ifluid
      WRITE (6,*) '    '
      WRITE (6,*) 'MANIFOLD OPERATING CONDITIONS'
      WRITE (6,*) '     '
      WRITE (6,*) 'INLET PRESSURE (psia) =',Pin
      WRITE (6,*) 'INLET TEMPERATURE (deg-R) =',Tin
      WRITE (6,*) 'MEAN CONDENSER QUALITY =',Xin
      WRITE (6,*) 'OUTLET TEMPERATURE (deg-R) =',Tout
      WRITE (6,*) 'MANIFOLD FLOWREATE (Lbs/Hr) =',Wman
      WRITE (6,*) 'MANIFOLD DUTY (KWt) =',Qrad
      WRITE (6,*) '      '
      WRITE (6,*) 'COMPUTED RESULTS'
      WRITE (6,*) '      '
      WRITE (6,*) 'MANIFOLD PRESSURE DROP (PSID) =',DPman
      WRITE (6,*) 'MANIFOLD FILM TEMPERATURE DROP (deg-R) =',DTfilm
      WRITE (6,*) 'FLOW CROSS-SECTIONAL AREA (sq ft)=',Ar
      WRITE (6,*) 'MASS FLUX (lbm/h sq ft)=',Gt
      WRITE (6,*) 'VAPOR VELOCITY, ft/s=',V
      WRITE (6,*) 'HYDRAULIC DIAMETER =',Dh
      WRITE (6,*) 'CONDENSER CONDENSATE FLOW REGIME PARAMETER =',Cgt
      IF (Cgt.LE.0.3) THEN
      WRITE (6,*) 'CONDENSER IS OPERATING IN SHEAR FLOW REGIME'
      ELSE
```

```
      WRITE (6,*) 'CONDENSER IS NOT OPERATING IN SHEAR FLOW REGIME'
      WRITE (6,*) '*************************************************'
      ENDIF
      WRITE (6,*) '      '
      WRITE (6,*) 'CONDENSATE FILM REYNOLDS NUMBER =',Rel
      WRITE (6,*) 'SHEAR-CONTROLLED LIQ. FILM HEAT TRANSFE. COEFF.=',Hl
      WRITE (6,*) 'MARTINELLI PARAMETER =',Xtt
      WRITE (6,*) 'VAPOR REYNOLDS NUMBER =',Rev
      WRITE (6,*) 'MANIFOLD MASS (Lbs) =',XMANmas
C
      RETURN
      END
```

```
C
C
C
      SUBROUTINE HRENVR(IENflg,Halt,HINCL,Rsun,Yrlnch,Ealpha,Beta,Qsunx)
C
C     **** VARIABLES DEFINITION ****
C
C     IENflg = FLAG TO SET ENVIRONMENT DESIRED
C            = 1, EARTH ORBIT, LEO TO GEO USES GREATER OF DEBRIS
C              OR METEORITE FLUX, NO DEBRIS ABOVE 2000 Km.
C            = 2, BEYOND EARTH ORBIT, 0.25 TO 2.00 AU
C     Halt = ORBIT ALTITUDE (km)
C     HINCL = ORBIT INCLINATION ANGLE (28.5 TO 80.0 degress, ONLY)
C     Rsun = DISTANCE FROM SUN (AU)
C     Yrlnch = YEAR IN WHICH VEHICLE IS PLACED IN ORBIT
C     Ealpha = PRODUCT OF EARTH SHIELDING FACTOR AND METEORITE/DEBRIS
C              FLUX CONSTANT (GM^B/M^2-SEC)
C     Beta = METEORITE FLUX CONSTANT
C     Tsink = EFFECTIVE SINK TEMPERATURE (K)
C
      GO TO (10,20),IENFLG
C     COMPUTE DATA FOR EARTH ORBIT (LEO TO GEO)
   10 IF (HINCL.LT.28.5.OR.HINCL.GT.80.0) THEN
      WRITE (6,*) 'INVALID ORBIT INCLINATION ANGLE WAS INPUT'
      WRITE (6,*) 'INPUT ORBIT INCLINATION ANGLE WAS (deg) =',HINCL
      WRITE (6,*) 'INCLINATION ANGLE MUST BE BETWEEN 28.5 AND 80 deg.'
      STOP
      ELSE
      CONTINUE
      ENDIF
      DO 12 J=1,2
      IF (J.EQ.1) THEN
      Xm=1E-06
      ELSE
      Xm=1.0
      ENDIF
      A1 = 1.0/((2200.0*(Xm**0.306)+15)**4.38)
      A2 = 1.3E-09/(Xm+((1E11)*(Xm**2.0))+((1E27)*(Xm**4.0)))
      A3 = 1.3E-16/((Xm+((1E06)*(Xm**2.)))**0.85)
      ANt = (A1+A2+A3)*(1.0/0.565)
      IF (J.EQ.1) THEN
      AX1 = ALOG10(ANt)
      ELSE
      AX2 = ALOG10(ANt)
      ENDIF
   12 CONTINUE
      Alpha1 = AX2
      Beta1 = (AX1-AX2)/6.0
C
C     *** COMPUTE EARTH SHIELDING FACTOR, FOCUSING FACTOR ***
C
      Rorb = 6378.0 + Halt
```

```
      Rearth = 6378.0 + 100.0
      Ge = 1.0 + (Rearth/Rorb)
      ETA = ASIN(Rearth/(Rearth+Halt-100.0))
      Sf = (1.0+COS(ETA))/2.0
      DUM9 = Ge*Sf*(10.0**Alpha1)
      EalphaM = ALOG10(DUM9)
C     *** COMPUTE DEBRIS FLUX ***
      IF (Halt.GT.2000.0) THEN
      WRITE (6,*) 'EARTH ORBIT IS ABOVE DEBRIS REGION'
      Ealpha = 10.0**EalphaM
      Beta = Beta1
      Qsunx = 443.0
      GO TO 30
      ELSE
      CONTINUE
      ENDIF
      J=0
      DO 14 J=1,2
      IF (J.EQ.1) THEN
      Xm = 1E-06
      D = (6.0*Xm/(4.7*3.141593))**0.333333
      ELSE
      Xm = 1.0
      D = (6.0*Xm/(2.8*3.141593))**0.362319
      ENDIF
      IF (Yrlnch.LT.2011) THEN
      Q = 0.02
      G1 = (1.0+Q)**(Yrlnch-1988.0)
      ELSE
      Q = 0.04
      G1 = ((1.0+Q)**23.0)*((1.0+Q)**(Yrlnch-2011.0))
      ENDIF
      P = 0.05
      G2 = 1.0 + (P*(Yrlnch-1988.0))
      F1 = 1.22E-05/(D**2.5)
      F2 = 8.1E+10/((D+700.0)**6.0)
      S = 87.2
      DUM1 = (Halt/200.0)+(S/140.0)-(1.5)
      PHONE = 10.0**DUM1
      PHI = PHONE/(PHONE+1.0)
      DUM2 = ((ALOG10(D)-0.78)**2.0)/(0.637**2.0)
      DUM3 = EXP(-DUM2)
      ND = SQRT(10.0**DUM3)
      PSI = -(0.313471)+(0.084327*HINCL)-(0.00186*(HINCL**2.0))+
     &(0.000014*(HINCL**3.0))
      DUM4 = (F1*G1)+(F2*G2)
      ANt = 3.168896E-08*(ND*PHI*PSI*DUM4)
      IF (J.EQ.1) THEN
      AX1 = ALOG10(ANt)
      ELSE
      AX2 = ALOG10(ANt)
      ENDIF
```

```
   14 CONTINUE
      Alpha2 = AX2
      Beta2 = (AX1-AX2)/6.0
      Ealpha2 = 1.0*Alpha2
      IF (Ealpha2.GT.EalphaM) THEN
      Ealpha = 10.0**Ealpha2
      Beta = Beta2
      ELSE
      Ealpha = 10.0**EalphaM
      Beta = Beta1
      ENDIF
      Qsunx = 443.0
C     WRITE (6,*) 'Ealpha =',ALOG10(Ealpha),'Beta =',Beta,'Qsun =',Qsunx
      GO TO 40
   20 CONTINUE
C
C     *** COMPUTES METEORITE FLUX AWAY FROM EARTH ORBIT ***
C
      DO 22 J=1,2
      IF (J.EQ.1) THEN
      Xm=1E-06
      ELSE
      Xm=1.0
      ENDIF
      A1 = 1.0/((2200.0*(Xm**0.306)+15)**4.38)
      A2 = 1.3E-09/(Xm+((1E11)*(Xm**2.0))+((1E27)*(Xm**4.0)))
      A3 = 1.3E-16/((Xm+((1E06)*(Xm**2.)))**0.85)
      ANt = (A1+A2+A3)*(1.0/(Rsun**1.5))
      IF (J.EQ.1) THEN
      AX1 = ALOG10(ANt)
      ELSE
      AX2 = ALOG10(ANt)
      ENDIF
   22 CONTINUE
      Ealpha = 10.0**AX2
      Beta = (AX1-AX2)/6.0
      Qsunx = 443.0*((1.0/Rsun)**2.0)
   30 CONTINUE
C     WRITE (6,*) 'Ealpha =',ALOG10(Ealpha),'Beta =',Beta,'Qsun =',Qsunx
   40 RETURN
      END
```

```
C
C
C
      SUBROUTINE HRARMR(IENflg,Halt,HINCL,Rsun,Yrlnch,GAM,ARSF,Earm,RHO
     &arm,Atarget,Time,Prob,Temp,Tharm)
C
C     *** THIS SUBROUITINE PREDICTS THE AMOUNT OF ARMOR REQUIRED
C     TO PROVIDE A SPECIFIED NON-PUNCTURE PROBABILITY IN THE
C     INTERPLANETARY ENVIRONMENT (EARTH-MARS) (NASA SP-8038, 1970) OR
C     IN EARTH ORBIT (LEO-GEO) USING KESSLERS 1990 DEBRIS MODEL ***
C
C     *** ARMOR THICKNESS IS COMPUTED FROM THE EMPIRICAL RELATIONSHIP
C     PRESENTED BY HALLER AND LIEBLIEN (NASA-TN-D-4411), 1968. ***
C
C     *** VARIABLES DEFINED ***
C     IENflg = FLAG TO SET ENVIRONMENT DESIRED
C            = 1, EARTH ORBIT, LEO-GEO
C            = 2, BEYOND EARTH ORBIT, 0.25 TO 2.00 AU
C     Halt = ORBIT ALTITUDE (Km)
C     HINCL = ORBIT INCLINATION ANGLE (Degrees)
C     Rsun = DISTANCE FROM SUN (AU)
C     Yrlnch = YEAR IN WHICH VEHICLE IS PLACED IN ORBIT
C     GAM,ARSF = PENETRATION CONSTANTS - FUNCTIONS OF THE SPECIFIC MAT'L
C     RHOarm = ARMOR DENSITY (Lbs/cu-Ft)
C     Earm = YOUNGS MODULUS OF ARMOR (Lbs/sq-In)
C     Atarget = TARGET EXPOSED AREA (Sq-Me)
C     Temp = RADIATOR TEMPERATURE (K)
C     Ealpha = METEORITE FLUX CONSTANT FROM HRENVR
C     Time = EXPOSURE TIME (Secs)
C     Prob = NON-PUNCTURE PROBABILITY (0.9, 0.99, 0.999, ETC.)
      IF (IENflg.EQ.2) THEN
      RHOp = 0.5
      Vp = 20.0
      ELSE
      RHOp = 4.7
      Vp = 15.4
      ENDIF
      CALL HRENVR(IENflg,Halt,HINCL,Rsun,Yrlnch,Ealpha,Beta,Qsunx)
      Ca = 0.003657*SQRT(Earm*32.174/RHOarm)
      A1 = GAM*ARSF*SQRT((RHOp*62.4)/RHOarm)*((Vp/Ca)**0.666667)
      A2 = ((6.0/(3.141593*RHOp))**0.333333)
      A3 = (1.0/(3.0*Beta))
      A4 = (Ealpha*Atarget*Time/(-ALOG(Prob)))**A3
      A5 = (2.0/(2.0*BETA+2.0))**A3
      A6 = (Temp/300.0)**0.166667
      TARM = A1*A2*A4*A5*A6
      Tharm = TARM/2.54
C     RETURNS THICKNESS IN INCHES
      RETURN
      END
```

```
C
C
C
      SUBROUTINE HRTSNK(IENflg,Halt,HINCL,Rsun,Yrinch,Alpha,Hap,HArad,Ts
     &ink)
C     *** ROUTINE TO ESTIMATE THE MAXIMUM SINK TEMPERATURE SEEN BY A
C     BODY IN ORBIT.  EARTH REFLECTION AND EARTH RE-RADIATION IS
C     CONSIDERED FOR BODIES IN LEO TO GEO EARTH ORBIT.
C
C     INPUTS DEFINITION
C         IENflg = FLAG TO SET ENVIRONMENT DESIRED
C                = 1, LEO TO GEO
C                = 2, BEYOND EARTH ORBIT
C         Halt = ORBIT ALTITUDE (Km)
C         HINCL = ORBIT INCLINATION ANGLE
C         Rsun = DISTANCE FROM SUN (AU)
C         Yrinch = YEAR IN WHICH VEHICLE IS PLACED IN ORBIT
C         Alpha = RADIATOR SURFACE ABSORPTIVITY
C         Hap = PROJECTED AREA (SQ-Feet)
C         HArad = TOTAL RADIATING AREA (SQ-Feet)
C     OUTPUT DEFINITION
C         Tsink = EFFECTIVE SINK TEMPERATURE (K)
C     ORBITAL CONSTANTS
C         Sc = SOLAR CONSTANT
C         Er = EARTH REFLECTION CONSTANT
C         Ee = EARTH EMISSION CONSTANT
C         R = EARTH RADIUS (N-MILES)
      CALL HRENVR(IENflg,Halt,HINCL,Rsun,Yrinch,Ealpha,Beta,Qsunx)
      IF (Rsun.EQ.1.0) THEN
      Sc = 443.0
      Er = 74.2
      Ee = 65.9
      ELSE
      Sc = Qsunx
      Er = 0.0
      Ee = 0.0
      ENDIF
      R = 6378.0
      AK = (R/(R+HAlt))**2.0
      Qs = Sc*Alpha*HAp
      Qr = AK*Er*HAp
      Qe = AK*Ee*HAp
      Qrad = Qs+Qr+Qe
      Qflux = Qrad/HArad
      SIGMA = 1.714E-09
      Tsink = ((Qflux/SIGMA)**0.25)
C     RETURNS Tsink IN (deg-R)
      RETURN
      END
```

```
C
C
C
      SUBROUTINE Fluidprop(Ifluid,T0,Xliqden,Vapden,Xliqvisc,Vapvisc,P0,
     1Surften,Xlhv,Xk,Xmw,Tcfluid)
C
C     THERMODYNAMIC PROPERTIES USED FOR HEAT PIPE PERFORMANCE ESTIMATES
C
      COMMON /RAD3/ Roomden(10),Whgp(159)
      Roomden(2)=1.000
      Roomden(3)=0.971
      Roomden(4)=0.534
      Roomden(5)=0.862
      Roomden(8)=13.546
      Roomden(9)=0.6120
      Tk=T0+273.2
      IF (Ifluid.EQ.2) THEN
      GOTO 8020
      ELSE
      CONTINUE
      ENDIF
      IF (Ifluid.EQ.3) THEN
      GOTO 8030
      ELSE
      CONTINUE
      ENDIF
      IF (Ifluid.EQ.4) THEN
      GOTO 8040
      ELSE
      CONTINUE
      ENDIF
      IF (Ifluid.EQ.5) THEN
      GOTO 8060
      ELSE
      CONTINUE
      ENDIF
      IF (Ifluid.EQ.8) THEN
      GOTO 8080
      ELSE
      CONTINUE
      ENDIF
      IF (Ifluid.EQ.9) THEN
      GOTO 8090
      ELSE
      CONTINUE
      ENDIF
 8100 WRITE (*,*) 'TEMPERATURE OF ',T0,'OUT OF RANGE FOR ',Ifluid
      GOTO 9000
C     WATER
 8020 IF (T0.LE.5.0) THEN
      GOTO 8100
      ELSE
```

```
      CONTINUE
      ENDIF
      IF (T0.GT.433.0) THEN
      GOTO 8100
      ELSE
      CONTINUE
      ENDIF
      Xliqvisc=0.0002414*10.0**(247.8/(Tk-140.0))
      Vapvisc=0.000001*10.0**(2.5989-(179.3/Tk))
      IF (T0.GT.200.0) THEN
      GOTO 8055
      ELSE
      CONTINUE
      ENDIF
      Xliqden = 0.01*10.0**(1.8079+(64.9/Tk))
      P0=10.0**(8.625109-(2152.69/Tk))
      Vapden=0.2193*(P0/760.0)/Tk
      Surften=10.0**(1.06335+(259.17/Tk))
      Xlhv=10.0**(2.46008+(100.7/Tk))
      GOTO 8057
 8055 Xliqden=0.609675+3.02832E-03*T0-8.982149E-06*T0**2.0
      P0=2.24732E-06*T0**4.22186
      Vapden=2.35726E-07*EXP(0.01767*T0)
      Surften=77.8092-0.208046*T0
      Xlhv=200.529+2.93522*T0-8.30692E-03*T0**2.0
 8057 Xk=1.324
      Xmw=18.0
      Tcfluid=0.000918+1.572E-06*Tk
      RETURN
C     SODIUM
 8030 IF (T0.LE.450.0) THEN
      GOTO 8100
      ELSE
      CONTINUE
      ENDIF
      IF (T0.GT.1100.0) THEN
      GOTO 8100
      ELSE
      CONTINUE
      ENDIF
      Xliqden=1.0629-.0003167*Tk+7.244E-08*Tk**2.0
      Vapden=EXP(-36.89+.04218*Tk-1.507E-05*Tk**2.0)
      Xliqvisc=.006549-7.271E-06*Tk+2.52E-09*Tk**2.0
      Vapvisc=5.724E-05+1.749E-07*Tk-2.466E-11*Tk**2.0
      X1=-12.5847
      X2=.0354119
      X3=-1.53891E-05
      P0=EXP(X3*T0**2.0+X2*T0+X1)
      Surften=193.2-.06442*Tk-7.388E-06*Tk**2.0
      Xlhv=1215.0-.2569*Tk+5.976E-06*Tk**2.0
      Xk=1.68
      Xmw=22.99
```

```
      Tcfluid=.2389*(1.0796-.0007057*Tk+2.188E-07*Tk**2.0)
      RETURN
C      LITHIUM
 8040 IF (T0.LE.800.0) THEN
      GOTO 8100
      ELSE
      CONTINUE
      ENDIF
      IF (T0.GT.1800.0) THEN
      GOTO 8100
      ELSE
      CONTINUE
      ENDIF
      P9=1333.2
      Xliqden=.5512-9.929E-05*Tk+1.085E-08*Tk**2.0
      Vapden=EXP(-32.23+.021336*Tk-4.5573E-06*Tk**2.0)
      Xliqvisc=.0033036-7.5424E-07*Tk+3.0799E-12*Tk**2.0
      Vapvisc=-2.229E-05+1.8848E-07*Tk-3.296E-11*Tk**2.0
      P0 = EXP(-8.347+0.02045*Tk-4.14E-06*Tk**2.0)/P9
      Surften=486.8-.17573*Tk+1.1559E-05*Tk**2.0
      Xlhv=6396.0-1.401*Tk+1.8947E-04*Tk**2.0
      Xk=1.54
      Xmw=6.94
      Tcfluid=.000012*T0+.10688
      RETURN
C     POTASSIUM
 8060 IF (T0.LE.100.0) THEN
      GOTO 8100
      ELSE
      CONTINUE
      ENDIF
      IF (T0.GT.900.0) THEN
      GOTO 8100
      ELSE
      CONTINUE
      ENDIF
      Xliqden=0.908358-2.2445E-04*Tk-1.2746E-08*Tk**2.0
      Vapden=EXP(0.8135742-8241.151/Tk-426986.1/Tk**2.0)
      Xliqvisc=-4.3906E-04+2.0287/Tk-541.09/Tk**2.0+164680.0/Tk**3.0
      Vapvisc=3.8701E-05+1.9825E-07*Tk-4.5283E-11*Tk**2.0
      P0=750.06*EXP(9.191863-9030.992/Tk-433033.8/Tk**2.0)
      Surften=141.48-0.07392*Tk
      Xlhv=0.23889*(2269.1-0.13184*Tk-0.0002003*Tk**2.0)
      Xk=1.63
      Xmw=39.096
      T9=1.8*Tk-459.7
      Tcfluid=.16931*(.9669-4.7904E-04*T9+1.3778E-07*T9**2.0-2.4884E-11*
     &T9**3.0)
      RETURN
C     NASA MERCURY AS USED BY THERMACORE
 8080 IF (T0.LE.10.0) THEN
      GOTO 8100
```

```
      ELSE
      CONTINUE
      ENDIF
      IF (T0.GT.800.0) THEN
      GOTO 8100
      ELSE
      CONTINUE
      ENDIF
C     *** INSERT P-TABLE HERE ***
C
C     PRESSURE TABLE FOR MERCURY
      Whgp(1) = 0.05796
      Whgp(2) = 0.08958
      Whgp(3) = 0.1368
      Whgp(4) = 0.2067
      Whgp(5) = 0.3087
      Whgp(6) = 0.4562
      Whgp(7) = 0.6672
      Whgp(8) = 0.9658
      Whgp(9) = 1.384
      Whgp(10) = 1.965
      Whgp(11) = 2.763
      Whgp(12) = 3.850
      Whgp(13) = 5.317
      Whgp(14) = 7.280
      Whgp(15) = 9.885
      Whgp(16) = 13.31
      Whgp(17) = 17.79
      Whgp(18) = 23.59
      Whgp(19) = 31.05
      Whgp(20) = 40.57
      Whgp(21) = 52.64
      Whgp(22) = 67.84
      Whgp(23) = 86.85
      Whgp(24) = 110.5
      Whgp(25) = 139.7
      Whgp(26) = 175.5
      Whgp(27) = 219.3
      Whgp(28) = 272.4
      Whgp(29) = 336.5
      Whgp(30) = 413.6
      Whgp(31) = 505.7
      Whgp(32) = 615.2
      Whgp(33) = 744.9
      Whgp(34) = 897.7
      Whgp(35) = 1077.0
      Whgp(36) = 1286.0
      Whgp(37) = 1530.0
      Whgp(38) = 1813.0
      Whgp(39) = 2139.0
      Whgp(40) = 2514.0
      Whgp(41) = 2944.0
```

```
Whgp(42) = 3426.0
Whgp(43) = 3996.0
Whgp(44) = 4632.0
Whgp(45) = 5351.0
Whgp(46) = 6164.0
Whgp(47) = 7078.0
Whgp(48) = 8104.0
Whgp(49) = 9254.0
Whgp(50) = 10540.0
Whgp(51) = 11970.0
Whgp(52) = 13560.0
Whgp(53) = 15320.0
Whgp(54) = 17280.0
Whgp(55) = 19440.0
Whgp(56) = 21820.0
Whgp(57) = 24440.0
Whgp(58) = 27310.0
Whgp(59) = 30470.0
Whgp(60) = 33930.0
Whgp(61) = 37710.0
Whgp(62) = 41840.0
Whgp(63) = 46330.0
Whgp(64) = 51230.0
Whgp(65) = 56550.0
Whgp(66) = 62320.0
Whgp(67) = 68580.0
Whgp(68) = 75360.0
Whgp(69) = 82680.0
Whgp(70) = 90600.0
Whgp(71) = 99140.0
Whgp(72) = 108300.0
Whgp(73) = 118200.0
Whgp(74) = 128900.0
Whgp(75) = 140300.0
Whgp(76) = 152600.0
Whgp(77) = 165800.0
Whgp(78) = 179900.0
Whgp(79) = 194900.0
Whgp(80) = 211000.0
Whgp(81) = 228200.0
Whgp(82) = 246600.0
Whgp(83) = 266200.0
Whgp(84) = 287000.0
Whgp(85) = 309100.0
Whgp(86) = 332700.0
Whgp(87) = 357700.0
Whgp(88) = 384200.0
Whgp(89) = 412400.0
Whgp(90) = 442200.0
Whgp(91) = 473700.0
Whgp(92) = 507000.0
Whgp(93) = 542200.0
```

```
      Whgp(94) = 579300.0
      Whgp(95) = 618400.0
      Whgp(96) = 659700.0
      Whgp(97) = 703000.0
      Whgp(98) = 748700.0
      Whgp(99) = 796600.0
      Whgp(100) = 846800.0
      Whgp(101) = 899600.0
      Whgp(102) = 954800.0
      Whgp(103) = 1013000.0
      Whgp(104) = 1073000.0
      Whgp(105) = 1136000.0
      Whgp(106) = 1202000.0
      Whgp(107) = 1271000.0
      Whgp(108) = 1342000.0
      Whgp(109) = 1417000.0
      Whgp(110) = 1494000.0
      Whgp(111) = 1575000.0
      Whgp(112) = 1658000.0
      Whgp(113) = 1745000.0
      Whgp(114) = 1835000.0
      Whgp(115) = 1927000.0
      Whgp(116) = 2024000.0
      Whgp(117) = 2123000.0
      Whgp(118) = 2225000.0
      Whgp(119) = 2331000.0
      Whgp(120) = 2441000.0
      Whgp(121) = 2553000.0
      Whgp(122) = 2669000.0
      Whgp(123) = 2788000.0
      Whgp(124) = 2911000.0
      Whgp(125) = 3037000.0
      Whgp(126) = 3166000.0
      Whgp(127) = 3299000.0
      Whgp(128) = 3436000.0
      Whgp(129) = 3576000.0
      Whgp(130) = 3719000.0
      Whgp(131) = 3867000.0
      Whgp(132) = 4018000.0
      Whgp(133) = 4173000.0
      Whgp(134) = 4332000.0
      Whgp(135) = 4495000.0
      Whgp(136) = 4662000.0
      Whgp(137) = 4834000.0
      Whgp(138) = 5010000.0
      Whgp(139) = 5191000.0
      Whgp(140) = 5377000.0
      Whgp(141) = 5568000.0
      Whgp(142) = 5766000.0
      Whgp(143) = 5969000.0
      Whgp(144) = 6179000.0
      Whgp(145) = 6396000.0
```

```
      Whgp(146) = 6620000.0
      Whgp(147) = 6853000.0
      Whgp(148) = 7094000.0
      Whgp(149) = 7345000.0
      Whgp(150) = 7607000.0
      Whgp(151) = 7880000.0
      Whgp(152) = 8165000.0
      Whgp(153) = 8465000.0
      Whgp(154) = 8779000.0
      Whgp(155) = 9110000.0
      Whgp(156) = 9460000.0
      Whgp(157) = 9830000.0
      Whgp(158) = 10220000.0
      Whgp(159) = 10640000.0
      A0 = 0.0060783
      A1 = -3.1546E-05
      A2 = 8.0436E-08
      A3 = -1.0538E-10
      A4 = 6.9127E-14
      A5 = -1.7981E-17
      Xliqvisc=A0+A1*Tk+A2*Tk**2.0+A3*Tk**3.0+A4*Tk**4.0+A5*Tk**5.0
      Xliqvisc=Xliqvisc*10.0
      A0 = -2.0271E-05
      A1 = 3.0869E-07
      A2 = -7.8612E-10
      A3 = 1.2985E-12
      A4 = -9.7932E-16
      A5 = 2.7985E-19
      Vapvisc=A0+A1*Tk+A2*Tk**2.0+A3*TK**3.0+A4*Tk**4.0+A5*Tk**5.0
      Vapvisc=Vapvisc*10.0
      A0 = 7787.0
      A1 = 55.864
      A2 = -0.19524
      A3 = 3.0795E-04
      A4 = -2.3092E-07
      A5 = 6.631E-11
      Xliqden=A0+A1*Tk+A2*Tk**2.0+A3*Tk**3.0+A4*Tk**4.0+A5*Tk**5.0
      Xliqden=Xliqden*0.001
      A0 = -69.042
      A1 = 0.37673
      A2 = -8.7608E-04
      A3 = 1.0875E-06
      A4 = -6.8926E-10
      A5 = 1.7519E-13
      Vapden=A0+A1*Tk+A2*Tk**2.0+A3*Tk**3.0+A4*Tk**4.0+A5*Tk**5.0
      Vapden=EXP(Vapden)*0.001
      A0 = -58.282
      A1 = 0.36094
      A2 = -8.1354E-04
      A3 = 9.8676E-07
      A4 = -6.1379E-10
      A5 = 1.5358E-13
```

```
      P0=A0+A1*Tk+A2*Tk**2.0+A3*Tk**3.0+A4*Tk**4.0+A5*Tk**5.0
      P0=10.0*EXP(P0)/1333.2
      A0 = 0.67466
      A1 = -0.0015864
      A2 = 4.8201E-06
      A3 = -7.5378E-09
      A4 = 5.2245E-12
      A5 = -1.3472E-15
      Surften=A0+A1*Tk+A2*Tk**2.0+A3*Tk**3.0+A4*Tk**4.0+A5*Tk**5.0
      Surften=Surften*1000.0
      A0 = 316360.0
      A1 = -27.136
      A2 = -0.063935
      A3 = 1.7119E-04
      A4 = -1.6668E-07
      A5 = 4.4864E-11
      Xlhv=A0+A1*Tk+A2*Tk**2.0+A3*Tk**3.0+A4*Tk**4.0+A5*Tk**5.0
      Xlhv=0.001*Xlhv/4.184139
      A0 = 4.0347
      A1 = 0.16674
      A2 = -5.1079E-06
      A3 = -1.7922E-09
      A4 = 1.1886E-12
      A5 = -3.0063E-16
      Tcfluid=A0+A1*Tk+A2*Tk**2.0+A3*Tk**3.0+A4*Tk**4.0+A5*Tk**5.0
      Tcfluid=0.001*Tcfluid/4.184139
      Xk=1.663
      Xmw=200.59
      RETURN
C     AMMONIA
 8090 IF (T0.LE.-60.0) THEN
      GOTO 8100
      ELSE
      CONTINUE
      ENDIF
      IF (T0.GT.120.0) THEN
      GOTO 8100
      ELSE
      CONTINUE
      ENDIF
      Xliqden=1.887137-(1.165350E-02*Tk)+(3.96285E-05*Tk**2.0)-(5.02087
     &9E-08*Tk**3.0)
      Vapden=16.0654613573-(0.34110173779*Tk)+(2.92776494570E-03*Tk**2.
     &0)-(1.27231714826E-05*Tk**3.0)+(2.76697543450E-08*Tk**4.0)-(2.003
     &76015440E-11*Tk**5.0)-(2.31634291110E-14*Tk**6.0)+(3.54492347343E
     &-17*Tk**7.0)
      Xliqvisc=(8.162646E-02)-(9.845264E-04*Tk)+(4.593305E-06*Tk**2.0)-
     &(9.472753E-09*Tk**3.0)+(7.192006E-12*Tk**4.0)
      Vapvisc=-1.961381E-04+(2.789346E-06*Tk)-(1.024679E-08*Tk**2.0)+(1
     &.432595E-11*Tk**3.0)
      Tdummy=Tk*1.8
      Pdummy=EXP(13.89430-(4618.37/(Tdummy-19)))
```

```
      PO = Pdummy*70.3077
      Surften=94.9794*(1-((Tk/405.56)**1.15191))
      Xlhv=-2296.721959+(39.685263*Tk)-(0.218296*Tk**2)+(5.240955E-04*T
     &k**3.0)-(4.734199E-07*Tk**4)
      Xk=1.33
      Xmw=17.03
      Tcfluid=-(2.441905E-04)+(1.284515E-05*Tk)-(2.651515E-08*Tk**2.0)
 9000 RETURN
      END
```

```
C
C
C
      SUBROUTINE Tsat(Ifluid,P9,P0,T0)
C
C     CALCULATE TEMPERATURE FROM PRESSURE
C
      COMMON /RAD3/ Roomden(10),Whgp(159)
      IF (Ifluid.EQ.2) THEN
      GOTO 9110
      ELSE
      CONTINUE
      ENDIF
      IF (Ifluid.EQ.3) THEN
      GOTO 9220
      ELSE
      CONTINUE
      ENDIF
      IF (IFLUID.EQ.4) THEN
      GOTO 9230
      ELSE
      CONTINUE
      ENDIF
      IF (IFLUID.EQ.5) THEN
      GOTO 9120
      ELSE
      CONTINUE
      ENDIF
      IF (Ifluid.EQ.8) THEN
      GOTO 9170
      ELSE
      CONTINUE
      ENDIF
      IF (Ifluid.EQ.9) THEN
      GOTO 9180
      ELSE
      CONTINUE
      ENDIF
C     WATER
 9110 IF (P0.LE.12750.0) THEN
      GOTO 9115
      ELSE
      CONTINUE
      ENDIF
      T0=(P0/2.24732E-06)**0.2368624
      RETURN
 9115 T0=-2152.69/((ALOG(P0)/2.30259)-8.625109)-273.2
      RETURN
C     POTASSIUM
 9120 X=SQRT((-9030.9923)**2-4*(ALOG(P0/750.06)-9.191863)*433033.8)
      T0=(-9030.9923-X)/(2*(ALOG(P0/750.06)-9.191863))-273.2
      RETURN
```

```
C     NASA MERCURY
 9170 Pnasa=P0*133.32
      DO 9171 I=2,159,1
      IF (Pnasa.GT.Whgp(I)) THEN
      GOTO 9171
      ELSE
      CONTINUE
      ENDIF
      GOTO 9172
 9171 CONTINUE
      WRITE (6,*) "NASA MERCURY PRESSURE TOO HIGH --- JOB ABORTED"
      RETURN
 9172 T1=280+(I-1)*5-5
      Xtk=T1+((Pnasa-Whgp(I-1))/(Whgp(I)-Whgp(I-1)))*5
      T0 = Xtk-273.2
      RETURN
C     AMMONIA
 9180 Ps=0.0142232*P0
      Ts=(4618.37/(13.89430-ALOG(Ps)))+19
      T0 = (Ts/1.8)-273.2
      RETURN
C     SODIUM
 9220 X1=-12.5847
      X2=.0354119
      X3=-1.53891E-05
      T0=(-X2+SQRT(X2**2-4*X3*(X1-ALOG(P0))))/(2*X3)
      RETURN
C     LITHIUM
 9230 T0=(.02045-SQRT(4.18203E-04-1.656E-05*(ALOG(P0*P9)+8.347)))/8.28E-
     &06-273.2
      RETURN
      END
```

```
C
C
C
      SUBROUTINE Wallprop(Imatl,TO,Wallden,Tcwall)
C
C     DENSITY AND THERMAL CONDUCTIVITY OF HEAT PIPE WALL MATERIALS"
C     USED IN HEAT PIPE PERFORMANCE CALCULATION SUBROUTINE
C
      IF (Imatl.EQ.1) THEN
      GOTO 9200
      ELSE
      CONTINUE
      ENDIF
      IF (Imatl.EQ.2) THEN
      GOTO 9210
      ELSE
      CONTINUE
      ENDIF
      IF (Imatl.EQ.3) THEN
      GOTO 9220
      ELSE
      CONTINUE
      ENDIF
      IF (Imatl.EQ.4) THEN
      GOTO 9230
      ELSE
      CONTINUE
      ENDIF
      IF (Imatl.EQ.5) THEN
      GOTO 9240
      ELSE
      CONTINUE
      ENDIF
      IF (Imatl.EQ.6) THEN
      GOTO 9250
      ELSE
      CONTINUE
      ENDIF
      IF (Imatl.EQ.7) THEN
      GOTO 9260
      ELSE
      CONTINUE
      ENDIF
      IF (IMatl.EQ.8) THEN
      GOTO 9270
      ELSE
      CONTINUE
      ENDIF
C     TUNGSTEN
 9200 Wallden=19.35
      Tcwall=0.298-0.000024*TO
      RETURN
```

```
C     MOLYBDENUM
 9210 Wallden=10.22
      Tcwall=0.3488-0.0000617*(T0+273.2)
      RETURN
C     LOCKALLOY
 9220 Wallden=2.08
      Tcwall=0.5100611-4.19242E-04*T0
      RETURN
C     2S-O ALUMINUM
 9230 Wallden=2.85
      Tcwall=0.376701+1.37458E-04*T0
      RETURN
C     347-CRES
 9240 Wallden=8.03
      Tcwall=0.034393+3.2975E-05*T0
      RETURN
C     CARBON-CARBON
 9250 Wallden=1.86
      Tcwall=0.0362
      RETURN
C     NIOBIUM-0.1*ZIRCONIUM
 9260 Wallden=840.0*0.01
      Tcwall= 0.1075+T0/30000.0
      RETURN
C     COPPER
 9270 Wallden=8.96
      Tcwall=0.934
      RETURN
      END
```

```
C
C
C
      SUBROUTINE XLITHP(T,RHO,CP,VIS,TK)
C
C     THERMAL PROPERTIES OF LITHIUM LIQUID
C     T = INPUT TEMPERATURE (deg-R)
C     RHO = DENSITY (Lbs/cu-Ft)
C     CP = SPECIFIC HEAT (BTU/LB-R)
C     VIS = DYNAMIC VISCOSITY (Lb/Ft-Sec)
C     TK = THERMAL CONDUCTIVITY (BTU/Hr-Ft-Sec)
C
      RHO = 34.393537 - (0.003456*T) + (2.080291E-07*(T**2.0))
      CP = 1.356357 - (0.00068*T) + (5.006625E-07*(T**2.0)) - (1.805873E
     &-10*(T**3.0)) + (3.155294E-14*(T**4.0)) - (2.136471E-18*(T**5.0))
      VIS = 0.001085 - (1.326497E-06*T) + (7.245662E-10*(T**2.0)) - (1.7
     &74380E-13*(T**3.0)) + (1.632610E-17*(T**4.0))
      TK = 25.235376 + (0.001588*T)
      RETURN
      END
```

```
C
C
C
      SUBROUTINE XNAKPR(T,RHO,CP,VIS,TK)
C     THERMAL PROPERTIES OF NaK LIQUID
C     T = INPUT TEMPERATURE (deg-R)
C     RHO = DENSITY (Lb/cu-Ft)
C     CP = SPECIFIC HEAT (BTU/Lb-R)
C     VIS = DYNAMIC VISCOSITY (Lb/Ft-Sec)
C     TK = THERMAL CONDUCTIVITY (BTU/Hr-Ft-R)
      RHO = 58.54299-(0.008208*T)
      CP = 0.26478 - (0.000089*(T)) + (4.093060E-08*(T**2.0)) -
     & (4.532164E-12*(T**3.0))
      VIS = 0.000822 - (1.142435E-06*(T)) + (6.125737E-10*(T**2.0)) -
     & (1.130181E-13*(T**3.0))
      TK = 7.313351 + (0.013983*(T)) - (7.660423E-06*(T**2.0)) +
     & (1.189370E-09*(T**3.0))
      RETURN
      END
```

```
C
C
C
      SUBROUTINE HEXEPR(Ammix,Pmix,Tmix,Gma,Cpmix,Rhomix,Amumix,Akmix,
     &Prmix)
C     PROPERTIES OF HELIUM-XENON MIXTURES
C     T IN deg-R
C     WRITE (6,*) 'Ammix,Pmix,Tmix=',Ammix,Pmix,Tmix
      Gma=1.667
      Am1=4.0
      Am2=131.3
      X2=(Ammix-Am1)/(Am2-Am1)
      X1=1.0-X2
      Cpmix=4.97/Ammix
      Rhomix=144.0*Pmix*Ammix/(1545.0*Tmix)
      IF (Tmix.GT.1000.0) THEN
      GOTO 10
      ELSE
      Amuhe=5.7E-06+1.45E-08*Tmix
      GOTO 100
      ENDIF
   10 IF (Tmix.GT.1600.0) THEN
      GOTO 20
      ELSE
      Amuhe=8.867E-06+1.1333E-08*Tmix
      GOTO 100
      ENDIF
   20 Amuhe=1.1114E-05+9.930E-09*Tmix
  100 IF (Tmix.GT.1100.0) THEN
      GOTO 30
      ELSE
      Akhe=0.0403+8.471E-05*Tmix
      GOTO 200
      ENDIF
   30 IF (Tmix.GT.1800.0) THEN
      GOTO 40
      ELSE
      Akhe=0.0589+6.786E-05*Tmix
      GOTO 200
      ENDIF
   40 Akhe=0.0625+6.583E-05*Tmix
  200 IF (Tmix.GT.1200.0) THEN
      GOTO 50
      ELSE
      Amuxe=5.25E-06+2.1375E-08*Tmix
      GOTO 300
      ENDIF
   50 IF (Tmix.GT.2000.0) THEN
      GOTO 60
      ELSE
      Amuxe=1.0500E-05+1.7000E-08*Tmix
      GOTO 300
```

```
      ENDIF
   60 Amuxe=1.5500E-05+1.45E-08*Tmix
  300 IF (Tmix.GT.1200.0) THEN
      GOTO 70
      ELSE
      Akxe=0.00115+4.375E-06*Tmix
      GOTO 400
      ENDIF
   70 IF (Tmix.GT.2500.0) THEN
      GOTO 80
      ELSE
      Akxe=0.00252+3.2308E-06*Tmix
      GOTO 400
      ENDIF
   80 Akxe=0.00342+1.8000E-06*Tmix
  400 Amu1=Amuhe
      Amu2=Amuxe
      Ak1=Akhe
      Ak2=Akxe
      Dum1=2.82843*SQRT(1.0+(Am1/Am2))
      Dum2=1.0+SQRT(Amu1/Amu2)*(Am2/Am1)**0.25
      Psi12=Dum2**2.0/Dum1
      Dum3=Amu2/Amu1*(Am1/Am2)
      Psi21=Dum3*Psi12
      Dum4=1.0+Psi12*(X2/X1)
      Dum5=1.0+Psi21*(X1/X2)
      Amumix=Amu1/Dum4+Amu2/Dum5
      Dum6=2.82843*SQRT(1.0+(Am1/Am2))
      Dum7=(1.0+SQRT(Ak1/Ak2)*(Am1/Am2)**0.25)**2.0
      Dum8=2.82843*SQRT(1.0+(Am2/Am1))
      Dum9=(1.0+SQRT(Ak2/Ak1)*(Am2/Am1)**0.25)**2.0
      Alam12=Dum7/Dum6
      Alam21=Dum9/Dum8
      Dum10=(Am1+Am2)**2.0
      Dum11=2.41*(Am1-Am2)*(Am1-0.142*Am2)
      Dum12=2.41*(Am2-Am1)*(Am2-0.142*Am1)
      For12=Alam12*(1.0+Dum11/Dum10)
      For21=Alam21*(1.0+Dum12/Dum10)
      Dum13=1.0+For12*(X2/X1)
      Dum14=1.0+For21*(X1/X2)
      Akmix=Ak1/Dum13+Ak2/Dum14
      Prmix=3600*Amumix*Cpmix/Akmix
C     WRITE (6,*) '  '
C     WRITE (6,*) 'THERMODYNAMIC PROPERTIES OF HELIUM-XENON MIXTURES'
C     WRITE (6,*) '  '
C     WRITE (6,*) 'Pressure (PSIA) =',Pmix
C     WRITE (6,*) 'Temperature (deg-R) =',Tmix
C     WRITE (6,*) 'Molecular Weight (MW) =',Ammix
C     WRITE (6,*) '  '
C     WRITE (6,*) 'Specific Heat Ratio (Gamma) =',Gmm
C     WRITE (6,*) 'Specific Heat (Btu/Lb-R) =',Cpmix
C     WRITE (6,*) 'Density (Lb/cu-Ft) =',Rhomix
C     WRITE (6,*) 'Viscosity (Lb/Ft-Sec) =',Amumix
```

```
2669  C     WRITE (6,*) 'Thermal Conductivity (BTU/Hr-Ft-R) =',Akmix
2670  C     WRITE (6,*) 'Prandlt Number (o) =',Prmix
2671        END
```

```
C
C
C
      SUBROUTINE HRRAD(Qrad,Trad,Xntubes,Xnexpip,Xlflat,Dhpipe,Ifluid,
     &Imatl,Theta,D2rad,Thickm,Thickf,Thick,Em,IENflg,Halt,HINCL,Rsun,
     &Yrlnch,Alpha,Hap,HArad,Tkfin,Rhocoating,Rhofin,RHOarm
     &,Xladiab,CONFIG,Xmchmas,PROB,GAM,ARSF,Earm,Time,Qrejected,
     &Thickf2,Thickm2,Aradiator,Aradeffect,Wthick2,Xnart2,Artid2,
     &Artwall2,Thick2,Xlevap2,Xladi2,Xlspec2,Xltot2,Xmpipes,Xmfluid,
     &Xmfin,Xmcoating,Xmarmor,Xmarmorid,Xstructure,
     &Xnetradmasst2,Wxl2)
C
      DIMENSION Dv(99),Space(99),T(99),Drad(99)
      DIMENSION Qc(99),Qact(99),Eff(99)
      COMMON /RAD3/ Roomden(10),Whgp(159)
C
C     IF CONFIG = 1.0, RADIATOR IS A FLAT PLATE, ELSE IS A CONE OR CYL.
C
      Pdesi = 1.0 - PROB
      Qrad = 3413.0*Qrad
C
      Angle2=Theta
      Dhpipe=2.54*Dhpipe
      CALL HRTSNK(IENflg,Halt,HINCL,Rsun,Yrlnch,Alpha,Hap,HArad,Tsink)
      Xlspec=6.0
      Xnpunit = 1.0
      Ixincr=50
      Wvoid2=0.5
      Wthick2=0.0020*Dhpipe
      Artwall2=0.0020*Dhpipe
      Artid2=0.10*Dhpipe
      Xnart2=ANINT(3.141593*Dhpipe/2.54)
C
  810 Dp=Dhpipe
      T(1)=Trad
  840 Dv7=Dp/2.54/12.0
  850 CONTINUE
  900 Qtot=0.0
      Aatot=0.0
      Vfbar=0.0
      DO 1520 I=1,50,1
      Xiv=FLOAT(I)
      Xinc=FLOAT(Ixincr)
      Dv(I)=Dv7
      Drad(I)=D2rad+2.0*Xlspec*SIN(Angle2/57.29578)*((Xiv)/Xinc)
 1060 Space(I)=3.141593*Drad(I)/Xntubes-Dv(I)
      Xlfrfin=12.0*Space(I)/2.0
 1070 Deltax=Xlspec/Xinc
 1090 IF (I.EQ.1) THEN
      D3=D2rad
      ELSE
      D3=Drad(I-1)
```

```
      ENDIF
 1110 Hnet=Xlspec*COS(Angle2/57.29578)
 1120 D1=D2rad+(2.0*Xlspec*SIN(Angle2/57.29578))
 1130 D2=Drad(I)
 1140 IF (I.EQ.1) THEN
      H2=Hnet
      ELSE
      H2=Hnet-(Deltax*COS(Angle2/57.29578)*(Xiv-1.0))
      ENDIF
 1170 H1=H2-(Deltax*COS(Angle2/57.29578))
 1180 CALL View(D1,D2,D3,H1,H2,Aa,Vf)
      Vf=Vf
      IF (CONFIG.EQ.1.0) Vf = 1.0
 1190 Vfct=Vf
 1200 Vfbar=Vfbar+(Vf*Aa)
 1210 Aatot=Aatot+Aa
      Xlevap=2.54*Xlflat
      Xladi=12.0*2.54*Xladiab
      Xlcond=12.0*2.54*(Xlspec/Xinc)*Xiv
      Pipid=Dhpipe
      Wall=Thick*12.0*2.54
      Tstrtk=Trad/1.8
      Qstart=(Qrad/Xntubes)*0.2931
      CALL HRHTPP(Imatl,Ifluid,Xlevap,Xladi,Xlcond,Pipid,Wall,Tstrtk,Qs
     1tart,Wthick2,Wvoid2,Artwall2,Artid2,Xnart2,T(I),Fluidcharge,Totalm
     2ass)
      T(I) = (T(I)+273.0)*1.8
      Tsubr=Tsink/T(I)
      Ahfin=Em*1.7212E-09*(T(I)**3.0)*(1.0+(Tsubr**2.0))*(1.0+Tsubr)
      Xm1=(((Ahfin/(Tkfin*Thickf))**0.5)*(Xlfrfin))/12.0
      Fin1=(EXP(Xm1)-EXP(-Xm1))/(EXP(Xm1)+EXP(-Xm1))
      Fin2=(1.0-(1.58*(1.0-EXP(-0.2*Xm1))*(1.0-Tsubr)))
      Eff(I)=(1.0/Xm1)*Fin1*Fin2
 1460 Xmfluid=(Fluidcharge/1000.0)*2.2046
 1470 Xmpipes=((Totalmass-Fluidcharge)/1000.0)*2.2046
 1490 Qc(I)=Xlspec/Xinc*(1.0+Vfct)*(Dv(I)+Eff(I)*Space(I))*Em*4.77E-13
     1*(T(I)**4.0-Tsink**4.0)
 1500 Qact(I)=Qc(I)
 1510 Qtot=Qtot+Qact(I)
 1520 CONTINUE
 1530 Vfctbar=Vfbar/Aatot
C1540 WRITE (6,*) 'Qtot =',Qtot*3600.0*Xntubes
 1570 Error7=Qrad/(Qtot*3600.0*Xntubes)-1.0
 1580 Xlspec=Xlspec*(1.0+0.8*(Error7))
 1600 IF (ABS(Error7).GT.0.0001) THEN
      Aatot=0.0
      Vfbar=0.0
      I=0
      GO TO 850
      ELSE
      CONTINUE
      ENDIF
```

```
C     HEAT PIPE RADIATOR MASS ALGORITHM
 1720 Xlradiator=Xlspec
 1730 Dv7 = 0.0
 1740 Space7 = 0.0
      DO 1780 I=1,50,1
      Dv7 = Dv7 + Dv(I)
      Space7 = Space7 + Space(I)
 1780 CONTINUE
      Dv7=Dv7/Xinc
      Space7=Space7/Xinc
 1820 Aradiator=3.141593*(Drad(1)/2.0+Drad(Ixincr)/2.0)*SQRT(((Xlspec*
     1COS(Theta/57.29578))**2.0)+(((Drad(Ixincr)/2.0)-(Drad(1)/2.0))**2.
     20))
 1870 Xmpipes=Xmpipes*(Xntubes+Xnexpip)
 1880 Xmfin=Space7*Thickf*Xlradiator*Rhofin*(Xntubes+Xnexpip)
 1890 Xmfluid=Xmfluid*(Xntubes+Xnexpip)
 1900 Acoating=3.141593/2.0*(Dv7+Thick+Thickm/2.0)*Thickm+Space7*Thickm
 1910 Xmcoating=Acoating*Xlradiator*Rhocoating*(Xntubes+Xnexpip)
 1930 Atube=Dv7*Xlradiator
 1940 Jj=IFIX(Xnexpip*Xnpunit)
 1950 Kkkk=IFIX(Xntubes)+Jj
 1960 P7=Pnew(Pdesi,Jj,Kkkk)
 1970 Prob=1.0-P7
      Temp = T(49)
      Atarget = Atube/10.764961
 1980 CALL HRARMR(IENflg,Halt,HINCL,Rsun,Yrinch,GAM,ARSF,Earm,RHOarm,At
     &arget,Time,Prob,Temp,Tharm)
      WRITE (6,*) 'Tharm (Inches) =',Tharm
      Thickarm=Tharm/12.0
 2050 Xmarmor=Thickarm*Dv7*Xlradiator*Rhoarm*(Xntubes+Xnexpip)*3.141593/
     & 2.0
 2555 FORMAT (6F12.4)
      Thickf2=12.0*Thickf
      Thickm2=12.0*Thickm
      Qrejected=Qrad/3413.0
C     WRITE (*,*) '     '
C     WRITE (*,*) 'TOTAL HEAT    AVERAGE     Radiator     Emissivity'
C     WRITE (*,*) 'REJECTED      EVAPORATOR    FIN          Coating '
C     WRITE (*,*) ' (KWt)        TEMP (R)    Thick (In)   Thick (In)'
C     WRITE (*,2555) Qrejected,Trad,Thickf2,Thickm2
      Xltot=Xlspec+((Xladi+Xlevap)/(2.54*12.0))
      Dv7=Dv7*12.0*2.54
      Thickarm2=Thickarm2*12.0
      Aradeffect=(1.0+Vfctbar)*Aradiator
C     WRITE (*,*) '     '
C     WRITE (*,*) ' Actual       Effective'
C     WRITE (*,*) '(one-side)    Radiator'
C     WRITE (*,*) 'Area(sq-Ft.)  Area(sq-Ft)'
C     WRITE (*,2555) Aradiator,Aradeffect
      Dhpipe=Dv7/2.54
      Thick2=Thick*12.0
C     WRITE (*,*) '     '
C     WRITE (*,*) 'HEAT PIPE DESIGN DETAILS - DIMS in INCHES'
```

```
C     WRITE (*,*) '     Pipe ID    Wick Thick   #Arteries     Art ID
C    1   Art Wall    Pipe wall'
C     WRITE (6,2555) Dhpipe,Wthick2,Xnart2,Artid2,Artwall2,Thick2
      Xladi2=Xladi/2.54
      Xlevap2=Xlevap/2.54
      Xlspec2=Xlspec*12.0
      Xltot2=Xltot*12.0
      Xmarmorid=Xmarmor
      Wxl2=13.2141*((0.6072+0.1514*Aradiator)**0.5)-10.296525
      Xstructure=0.0
      Xnetradmasst2=Xmpipes+Xmfluid+Xmfin+2.0*Xmcoating+Xmchmas+Xmarmor+
     1Xmarmorid+Xstructure
C     WRITE (*,*) 'Evap Length   Adi Length  Cond Length  Total Length'
C     WRITE (*,2555) Xlevap2,Xladi2,Xlspec2,Xltot2
C     WRITE (*,*) '     '
      Wxl2=13.2142*((0.6072+0.1514*Aradiator)**0.5)-10.296525
C     WRITE (*,*) 'RADIATOR MASS BREAKDOWN - Mass in Lbs.'
C     WRITE (*,*) 'Heat Pipes    Fluids     FINS     Emiss. Cont.'
C     WRITE (*,2555) Xmpipes,Xmfluid,Xmfin,Xmcoating
C     WRITE (*,*) 'O.D.ARMOR   I.D.ARMOR   Structure  TOTAL RADIATOR '
C     WRITE (*,2555) Xmarmor,Xmarmorid,Xstructure,Xnetradmasst2
C     WRITE (*,*) 'AREA(sq-M) =',Aradiator/10.764961,'Mass(Kg) =',Xnetra
C    1dmasst2/2.2046,'LENGTH(CM) =',Wxl2*12.0*2.54
C     WRITE (*,*) 'ETA =',282.5/Aradiator,'  MASS/AREA(#/sq-Ft.) =',(Xne
C    &tradmasst2)/Aradiator
C     WRITE (6,*) 'RADIATOR AREA REQUIRED (1.129412*Acomp) =',0.104916*A
C    &radiator
      RETURN
      END
```

```
C
C
C
 2980 SUBROUTINE HRHTPP(Imatl,Ifluid,Xle,Xla,Xlc,Pipid,Wall,Tstrtk,Qsta
     1rt,Wthick2,Wvoid2,Artwall2,Artid2,Xnart2,Textcond,Fluidcharge,Tota
     2lmass)
      COMMON /RAD3/ Roomden(10),Whgp(159)
 3030 Pipod=Pipid+2.0*Wall
C3040  WICK STRUCTURE # 1
 3050 Wcaprad=0.001
 3060 Wperm=0.0000005
 3070 Wvoid=Wvoid2
 3080 Wthick=Wthick2*2.54
 3090 Artwall=Artwall2*2.54
 3100 Artid=Artid2*2.54
 3110 Artod=Artid+2.0*Artwall
 3120 Vaprad=(Pipid-2.0*Wthick)/2.0
 3130 Xnart=Xnart2
C
C3140 CHECK ARTERY SPACING AND VAPOR SPACE
 3150 Circumf=3.141593*(2.0*Vaprad-Artod)
 3160 IF ((Xnart*Artod).GT.Circumf) THEN
 3170 WRITE (*,*) '   ARTERIES TOO CLOSELY SPACED ----'
 3180 ENDIF
 3190 Vaporarea=3.141593*(Vaprad**2.0-Xnart*Artod**2.0/4.0)
 3200 IF (Vaporarea.LE.0.0) THEN
 3210 WRITE (*,*) ' PIPE DIAMETER IS TOO SMALL --- VAPOR SPACE IS <= 0'
 3220 ENDIF
C     CALCULATE EFFECTIVE AND HYDRAULIC DIAMETERS
 3240 A=3.141593*(Vaprad**2.0-Xnart*Artod**2.0/4.0)
 3250 Effdiam=SQRT(4.0*A/3.141593)
 3260 Hydiam=4.0*A/(2.0*3.141593*Vaprad+Xnart*3.141593*Artod/2.0)
      P9=1333.2
 3280 Wetangle=0.0
 3290 Effarea=3.141596*Effdiam**2.0/4.0
C
 3300 Artperm=Artid**2.0/32.0
 3730 Q=Qstart
 3740 Q0=Q/4.185
 3750 Textevap=Tstrtk-273.0
 3770 T0=Textevap
C
 3780 CALL Wallprop(Imatl,T0,Wallden,Tcwall)
 3790 Dtewall=Q0*ALOG(Pipod/Pipid)/(Tcwall*2.0*3.141593*Xle)
 3810 T0=Textevap-Dtewall
 3820 CALL Fluidprop(Ifluid,T0,Xliqden,Vapden,Xliqvisc,Vapvisc,P0,Surfte
     1n,Xlhv,Xk,Xmw,Tcfluid)
C
 3830 CALL Wallprop(Imatl,T0,Wallden,Tcwall)
 3840 Tcwick=Tcwall
 3860 Tcfilledwick=Tcwick*(1.0-Wvoid*(1.0-Tcfluid/Tcwick))
 3870 Dtewick=Q0*ALOG(Pipid/(2.0*Vaprad))/(Tcfilledwick*2.0*3.141593*Xle
     1)
```

```
 3880 T0=Textevap-Dtewall-Dtewick
      CALL Fluidprop(Ifluid,T0,Xliqden,Vapden,Xliqvisc,Vapvisc,P0,Surfte
     1n,Xlhv,Xk,Xmw,Tcfluid)
C
 3910 X0=P0*P9
 3920 Dtevap1=T0+273.2
 3930 X8=Q0/((2.0*3.141593*Vaprad+Xnart*3.141593*Artod/2.0)*Xle)
 3940 J=0
 3950 T0=T0-0.1
      CALL Fluidprop(Ifluid,T0,Xliqden,Vapden,Xliqvisc,Vapvisc,P0,Surfte
     1n,Xlhv,Xk,Xmw,Tcfluid)
C
 3970 X1=P0*P9
 3980 Dtevap2=T0+273.2
 3990 X9=0.0000436*Xlhv*Xmw*(X0/SQRT(Xmw*Dtevap1)-X1/SQRT(Xmw*Dtevap2))
 4000 J=J+1
 4010 IF (J.GT.200) THEN
      GO TO 5670
      ELSE
      CONTINUE
      ENDIF
 4020 IF (X8.GT.X9) THEN
      GO TO 3950
      ELSE
      CONTINUE
      ENDIF
 4030 Dtevap=Dtevap1-Dtevap2
 4050 Tbev=Textevap-Dtewall-Dtewick-Dtevap
 4060 T0=Tbev
      CALL Fluidprop(Ifluid,T0,Xliqden,Vapden,Xliqvisc,Vapvisc,P0,Surfte
     1n,Xlhv,Xk,Xmw,Tcfluid)
 4080 Pbev=P0*P9
 4100 Evapcapforce=2.0*Surften*COS(Wetangle/57.29578)/Wcaprad
 4120 Esonic=0.474*Effarea*Xlhv*SQRT(Vapden*Pbev)
 4130 IF (Q0.LT.Esonic) THEN
      GOTO 4180
      ELSE
 4140 GOTO 5710
      ENDIF
 4180 Axvapvel=Q0/(Vapden*Effarea*Xlhv)
 4190 Eaxreyn=Vapden*Axvapvel*Hydiam/Vapvisc
 4200 Ff=16.0/Eaxreyn
 4220 C7=3.141593**2.0/8.0
 4230 C4=C7*Q0**2.0/(Effarea**2.0*Xlhv**2.0*Vapden)
 4240 IF (Pbev**2.0.LT.Pbev**2.0*C7*Xle*Ff/Effdiam*Vapden*Axvapvel**2.0)
     1THEN
      GOTO 4250
      ELSE
      CONTINUE
      ENDIF
 4250 IF (4.0*C4*Pbev.LE.Pbev**2.0) THEN
      GOTO 4270
```

```
      ELSE
 4260 GOTO 5750
      ENDIF
 4270 Dpveviscous=Pbev-SQRT(Pbev**2.0-Pbev*2.0*C7*Xle*Ff/Effdiam*Vapden*
     1Axvapvel**2.0)
 4280 Dpveinertial=(Pbev-SQRT(Pbev**2.0-4.0*C4*Pbev))/2.0
 4290 X0=Pbev-Dpveinertial-Dpveviscous
 4300 IF (X0.GT.0.0) THEN
      GOTO 4400
      ELSE
      GOTO 5790
      ENDIF
 4400 Dpleart=Xliqvisc*(Xle/2.0)*(Q0/Xnart)/(Artperm*Xliqden*Xlhv*3.1415
     193*Artid**2.0/4.0)
 4420 Xlengthflow=3.141593*(Pipid-Wthick)/(2.0*Xnart)
 4430 Dplewick=Xliqvisc*Xlengthflow*(Q0/(2.0*Xnart))/(Wperm*Xliqden*Xlhv
     1*Xle*Wthick)
 4450 P0=(Pbev-(Dpveinertial+Dpveviscous))/P9
 4460 Peav=P0*P9
 4470 CALL Tsat(Ifluid,P9,P0,T0)
 4480 Teav=T0
      CALL Fluidprop(Ifluid,T0,Xliqden,Vapden,Xliqvisc,Vapvisc,P0,Surfte
     1n,Xlhv,Xk,Xmw,Tcfluid)
 4520 Axvapvel=Q0/(Vapden*Effarea*Xlhv)
 4530 Velsound=SQRT(Xk*8.3144E+07*(Teav+273.2)/Xmw)
 4540 Eamach=Axvapvel/Velsound
 4550 IF (Eamach.LT.1.0) THEN
      GOTO 4570
      ELSE
 4560 GOTO 5830
      ENDIF
 4570 Eamach=Eamach
 4580 IF (Xle.EQ.0) THEN
      GOTO 4950
      ELSE
      CONTINUE
      ENDIF
 4600 Adbcapforce=2.0*Surften*COS(Wetangle/57.29578)/Wcaprad
 4620 Axvapvel=Q0/(Vapden*Effarea*Xlhv)
 4630 Aaxreyn=Vapden*Axvapvel*Hydiam/Vapvisc
 4640 Ff=16.0/Aaxreyn
 4650 IF (Aaxreyn.LE.2100.0) THEN
      GOTO 4710
      ELSE
      CONTINUE
      ENDIF
 4660 IF (Aaxreyn.GT.30000.0) THEN
      GOTO 4690
      ELSE
      CONTINUE
      ENDIF
 4670 Ff=0.0791/Aaxreyn**0.25
```

```
4680 GOTO 4710
4690 Ff=0.046/Aaxreyn**0.2
4710 P7=Peav
4720 IF (Eamach.GT.0.15) THEN
     GOTO 4750
     ELSE
     CONTINUE
     ENDIF
4730 Dpvaviscous=2.0*Ff*Xla/Effdiam*Vapden*Axvapvel**2.0
4740 GOTO 4790
4750 Sonicflag=0.0
4760 CALL Xmach(Eamach,P7,Ff,Xla,Effdiam,Xk,Xmß,Dplaviscous,Sonicflag)
4770 IF (Sonicflag.EQ.0.0) THEN
     GOTO 4790
     ELSE
4780 GOTO 5870
     ENDIF
4790 CONTINUE
4800 Dplaart=Xliqvisc*Xla*(Q0/Xnart)/(Artperm*Xliqden*Xlhv*3.141593*Ar
    1tid**2.0/4.0)
4820 P0=(Peav-Dpvaviscous)/P9
4830 Pacv=P0*P9
4840 Acmach=Xmß
4850 CALL Tsat(Ifluid,P9,P0,T0)
     CALL Fluidprop(Ifluid,T0,Xliqden,Vapden,Xliqvisc,Vapvisc,P0,Surfte
    1n,Xlhv,Xk,Xmw,Tcfluid)
4880 IF (Acmach.GT.0.15) THEN
     GOTO 5000
     ELSE
     CONTINUE
     ENDIF
4900 Axvapvel=Q0/(Vapden*Effarea*Xlhv)
4910 Velsound=SQRT(Xk*8.3144E+07*(Teav+273.2)/Xmw)
4920 Acmach=Axvapvel/Velsound
4930 GOTO 5000
4950 Pacv=Peav
4970 Acmach=Eamach
5000 CONTINUE
5020 Condcapforce=2.0*Surften*COS(Wetangle/57.29578)/Wcaprad
5060 Axvapvel=Q0/(Vapden*Effarea*Xlhv)
5070 Caxreyn=Vapden*Axvapvel*Hydiam/Vapvisc
5080 Ff=16.0/Caxreyn
5090 IF (Caxreyn.LE.2100.0) THEN
     GOTO 5140
     ELSE
     CONTINUE
     ENDIF
5100 IF (Caxreyn.GT.30000.0) THEN
     GOTO 5130
     ELSE
     CONTINUE
     ENDIF
```

```
5110 Ff=0.0791/Caxreyn**0.25
5120 GOTO 5140
5130 Ff=0.046/Caxreyn**0.2
5140 CONTINUE
5150 Dpvcviscous=2.0*Ff*(Xlc/2.0)/Effdiam*Vapden*Axvapvel**2.0
5160 Dpvcinertial=-0.5*Vapden*Axvapvel**2.0
5180 Dplcart=Xliqvisc*(Xlc/2.0)*(Q0/Xnart)/(Artperm*Xliqden*Xlhv*3.1415
     193*Artid**2.0/4.0)
5200 Xlengthflow=3.141593*(Pipid-Wthick)/(2.0*Xnart)
5210 Dplcwick=Xliqvisc*Xlengthflow*(Q0/(2.0*Xnart))/(Wperm*Xliqden*Xlhv
     1*Xlc*Wthick)
5230 P0=(Pacv-(Dpvcinertial+Dpvcviscous))/P9
5240 Pfcv=P0*P9
5260 IF (Pfcv.GT.0.0) THEN
     GOTO 5290
     ELSE
     CONTINUE
     ENDIF
5270 GOTO 6030
5290 CALL Tsat(Ifluid,P9,P0,T0)
5300 Tfcv=T0
     Zot=FLOAT(I)
5320 Dtcond=Dtevap*(Xle/Xlc)*(Zot/50.0)
5340 T0=Tfcv-Dtcond
     CALL Fluidprop(Ifluid,T0,Xliqden,Vapden,Xliqvisc,Vapvisc,P0,Surfte
     1n,Xlhv,Xk,Xmw,Tcfluid)
5360 CALL Wallprop(Imatl,T0,Wallden,Tcwall)
5370 Tcwick=Tcwall
5390 Tcfilledwick=Tcwick*(1.0-Wvoid*(1.0-Tcfluid/Tcwick))
5400 Dtcwick=Q0*ALOG(Pipid/(2.0*Vaprad))/(2.0*3.141593*Tcfilledwick*Xlc
     1)*(Zot/50.0)
5420 T0=Tfcv-Dtcond-Dtcwick
5430 CALL Wallprop(Imatl,T0,Wallden,Tcwall)
5440 Dtcwall=Q0*ALOG(Pipod/Pipid)/(Tcwall*2.0*3.141593*Xlc)*(Zot/50.0)
5460 Textcond=Tfcv-Dtcond-Dtcwick-Dtcwall
5465 Condenserdp=Dpvcviscous+Dpvcinertial+Dplcart+Dplcwick
5490 IF (Condcapforce.LT.Condenserdp) THEN
     GOTO 5950
     ELSE
     CONTINUE
     ENDIF
5500 X=Dpvcviscous-Dpvcinertial
5510 IF (X.LT.0.0) THEN
     X=0.0
     ELSE
     CONTINUE
     ENDIF
5530 Xleftoverc=Condcapforce-X-Dplcart-Dplcwick
5540 IF (Xla.EQ.0.0) THEN
5550 Xleftovera=0.0
5560 GOTO 5610
     ELSE
```

```
      CONTINUE
 5570 ENDIF
 5580 IF (Xleftoverc+Adbcapforce-Condcapforce.LT.Dplaviscous+Dplaart) TH
     1EN
      GOTO 5990
      ELSE
      CONTINUE
      ENDIF
 5600 Xleftovera=Xleftoverc+Adbcapforce-Condcapforce-Dplaviscous-Dplaart
 5605 Evapcapforcedp=Dpveviscous+Dpveinertial+Dpleart+Dplewick
 5610 IF (Xleftovera+Evapcapforce-Adbcapforce.LT.Evapcapforcedp) THEN
      GOTO 6030
      ELSE
 5630 GOTO 6060
      ENDIF
 5670 WRITE (*,*) 'TOO MUCH EVAPORATION DELTA-T'
 5710 WRITE (*,*) 'SONIC LIMIT EXCEEDED AT BEGINNING OF EVAPORATOR'
 5750 WRITE (*,*) 'SQRT IS NEGATIVE IN EVAP VISC DELTA-P EQN'
 5790 WRITE (*,*) 'EVAP VAPOR DELTA-P IS TOO HIGH'
 5830 WRITE (*,*) 'SONIC LIMIT EXCEEDED AT E-A INTERFACE'
 5870 WRITE (*,*) 'SONIC LIMIT EXCEEDED IN ADIABATIC SECTION'
 5910 WRITE (*,*) 'TOO MUCH CONDENSER VAPOR DELTA-P'
 5950 WRITE (*,*) 'NOT ENOUGH CAPILLARY FORCE IN CONDENSER'
 5990 WRITE (*,*) 'NOT ENOUGH CAPILLARY FORCE IN ADIABATIC SECTION'
 6030 WRITE (*,*) 'NOT ENOUGH CAPILLARY FORCE IN THE EVAPORATOR'
      STOP
 6060 Xlp=Xle+Xla+Xlc
 6070 Pipevolume=3.141593*(Pipod**2.0-Pipid**2.0)/4.0*Xlp+2.0*3.141593*P
     1ipod**2.0/4.0*2.0*Wall
 6080 Pipemass=Pipevolume*Wallden
 6090 Wickvolume=3.141593*(Pipid**2.0-(2.0*Vaprad)**2.0)/4.0*Xlp+Xnart*3
     1.141593*(Artod**2.0-Artid**2.0)/4.0*Xlp
 6100 Wickmass=Wickvolume*(1.0-Wvoid)*Wallden
 6110 Arteryvolume=Xnart*3.141593*(Artod**2.0-Artid**2.0)/4.0*Xlp
 6120 Arterymass=Arteryvolume*(1.0-Wvoid)*Wallden
 6130 Fluidcharge=(Wickvolume*Wvoid+Xnart*3.141593*Artid**2.0/4.0)*Roomd
     1en(Ifluid)
 6140 Totalmass=Pipemass+Wickmass+Arterymass+Fluidcharge
 6160 RETURN
      END
```

```
C
C
C
      SUBROUTINE Xmach(Eamach,P7,Ff,Xla,Effdiam,Xk,Xm8,Dplaviscous,Sonic
     &flag)
 7200 Xm7=Eamach
 7210 X7=Xm7
 7220 X3=4.0*Ff*Xla/Effdiam
 7260 X2=(1.0-Xm7**2.0)/(Xk*Xm7**2.0)+(Xk+1.0)/(2.0*Xk)*ALOG((Xk+1.0)*Xm
     17**2.0/(2.0*(1.0+(Xk-1.0)/2.0* Xm7**2.0)))
 7300 X1=X2-X3
 7310 IF (X1.GT.0.0) THEN
      GOTO 7400
      ELSE
      CONTINUE
      ENDIF
 7320 IF (X1.LT.0.0) THEN
      GOTO 7350
      ELSE
      CONTINUE
      ENDIF
 7330 Xm8=1.0
 7340 GOTO 7500
 7350 Sonicflag=1.0
 7360 RETURN
 7400 X4=0.1
 7410 Xm8=X7+X4*X7
 7420 X=(1.0-Xm8**2.0)/(Xk*Xm8**2.0)+(Xk+1.0)/(2.0*Xk)*ALOG((Xk+1.0)*Xm8
     1**2.0/(2.0*(1.0+(Xk-1.0)/2.0*Xm8**2.0)))
 7430 IF (ABS((X1-X)/X1).LE.0.001) THEN
      GOTO 7500
      ELSE
      CONTINUE
      ENDIF
 7440 X7=Xm8
 7450 IF (X.GT.X1) THEN
      GOTO 7410
      ELSE
      CONTINUE
      ENDIF
 7460 X4=0.01
 7470 Xm8=X7-X4*X7
 7480 GOTO 7420
 7500 IF (Xm8.LE.1.0) THEN
      GOTO 7550
      ELSE
      CONTINUE
      ENDIF
 7530 Sonicflag=1.0
 7550 Dplaviscous=P7-P7*Xm7/Xm8*SQRT((1.0+(Xk-1.0)/2.0*Xm7**2.0)/(1.0+(X
     1k-1.0)/2.0*Xm8**2.0))
 7560 RETURN
```

```
3211        END
```

```
C
C
C
      FUNCTION Pnew(U,J,K)
C
C     FUNCTION TO CALCULATE HEAT PIPE FAILURE PROBABILITY
C
C     *** VARAIBLES DEFINITION ***
C          U = 1.0 - Prob  (0.1, 0.01, 0.001)
C          J = INTEGER NUMBER OF REDUNDENT HEAT PIPES
C          K = INTEGER NUMBER OF TOTAL HEAT PIPES (REQUIRED+REDUNDENT)
      INTEGER H
C     REAL*8 Pold,Dudpold,Dudp,Dudpnew,F,U,A,Pnew
      Pold=0.03
      Dudpold=10.0
 9510 F=-U
      Dudp=0
      DO 9512 H=J+1,K,1
      A=Xlnfac(K)-Xlnfac(K-H)-Xlnfac(H)+H*ALOG(Pold)+(K-H)*ALOG(1-Pold)
      IF (A.GT.-50.0) THEN
      A=EXP(A)
      F=F+A
      Dudp=Dudp+A*(H/Pold-(K-H)/(1-Pold))
      ELSE
      CONTINUE
      ENDIF
 9512 CONTINUE
 9513 Dudpnew=(Dudp+Dudpold)/2
      IF (ABS(F/Dudpnew).LT.0.005) THEN
      Pnew=Pold-F/Dudpnew
      ELSE
      Pnew=Pold-0.4*F/Dudpnew
      ENDIF
      Dudpold=Dudpnew
      IF (Pnew.GT.0.99999) THEN
      Pnew=0.1+0.9*Pold
      ELSE
      CONTINUE
      ENDIF
      IF (Pnew.LT.0.00001) THEN
      Pnew=0.1*Pold
      ELSE
      CONTINUE
      ENDIF
      Error=ABS((Pnew-Pold)/Pold)
      Pold=Pnew
      IF (Error.GT.0.000001) THEN
      GOTO 9510
      ELSE
      CONTINUE
      ENDIF
      Pnew=Pnew
```

```
      RETURN
      END
```

```
C
C
C
 9700 FUNCTION Xlnfac(N)
C     REAL*8 F,Z,Xiz2,Xlnfac
C     FUNCTION TO CALCULATE THE LOG OF FACTORIALS OF WHOLE NUMBERS
      IF (N.EQ.0) THEN
      F=0.0
      ELSE
      CONTINUE
      ENDIF
      IF (N.EQ.1) THEN
      F=0.0
      ELSE
      CONTINUE
      ENDIF
      IF (N.EQ.2) THEN
      F=ALOG(2.0)
      ELSE
      CONTINUE
      ENDIF
      IF (N.EQ.3) THEN
      F=ALOG(6.0)
      ELSE
      CONTINUE
      ENDIF
      IF (N.EQ.4) THEN
      F=ALOG(24.0)
      ELSE
      CONTINUE
      ENDIF
      IF (N.EQ.5) THEN
      F=ALOG(120.0)
      ELSE
      CONTINUE
      ENDIF
      IF (N.GT.5) THEN
      Z=FLOAT(N+1)
      Xiz2=1./Z/Z
      F=(Z-.5)*ALOG(Z)-Z+.5*ALOG(2*3.141593)+1./(12*Z)*(1.-Xiz2/30*(1.-2
     1*Xiz2/7*(1.-3*Xiz2/4)))
      ELSE
      CONTINUE
      ENDIF
      Xlnfac=F
      RETURN
      END
```

```
C
C
C
      SUBROUTINE TMEAN(Tin,DTmean,DTfilm,Tbar)
      Tref = Tin - DTfilm
      Z1 = (1.0-(DTmean/Tref))**3.0
      Z2 = 1.0/((1.0/Z1)-1.0)
      Z3 = 3.0*Z2*(DTmean/Tref)
      Tbar = (Z3*(Tref**4.0))**0.25
      RETURN
      END
```

```
C
C
C
      SUBROUTINE ACONE(Rs,Rl,Ht,Areacone)
      A = 3.141593*(Rs+Rl)
      B = SQRT((Ht**2.0)+(Rl-Rs)**2.0)
      Areacone = A*B
      RETURN
      END
```

```
C
C
C
      SUBROUTINE AVIEW(Ds,Dl,Ht,Acone,Vfct)
      R1 = Ds/2.0
      R2 = Dl/2.0
      Acone = 3.141593*(R1+R2)*SQRT((Ht**2.0)+((R2-R1)**2.0))
      Aend = 3.141593*(R2**2.0)
      A1 = 3.141593*(R1**2.0)
      DUM1 = 1.0 + ((R2/R1)**2.0) + ((Ht/R1)**2.0)
      DUM2 = 4.0*((R2/R1)**2.0)
      DUM3 = SQRT((DUM1**2.0)-DUM2)
      F1to2 = 0.5*(DUM1-DUM3)
      Vfct = (Aend/Acone)*(1.0-((A1/Acone)*F1to2))
      RETURN
      END
```

```
C
C
C
      SUBROUTINE View(D1,D2,D3,H1,H2,Aa,Vf)
C
C     CONICAL RADIATOR ID VIEW FACTOR - Cone ID to Space via
C     Large End Only
C
C     **** VARIABLES DEFINITION ****
C     D1 = DIAMETER OF EXIT DISC
C     D2 = LARGE DIAMETER OF CONICAL ELEMENT
C     D3 = SMALL DIAMETER OF CONICAL ELEMENT
C     H1 = DISTANCE FROM TOP OF CONE TO SMALL DIAMETER PLANE
C     H2 = DISTANCE FROM TOP OF CONE TO LARGE DIAMETER PLANE
C     Aa = AREA OF ID OF CONICAL ELEMENT SURFACE
C     Vf = VIEW FACTOR OF CONICAL ELEMENT TO CONE END (LARGE DIA. END)
      R1=D1/2.0
      R2=D2/2.0
      R3=D3/2.0
      X12=1.0+(R2/R1)**2.0+(H1/R1)**2.0
      X13=1.0+(R3/R1)**2.0+(H2/R1)**2.0
      F1to2=0.5*(X12-SQRT((X12**2.0)-(4.0*(R2/R1)**2.0)))
      F1to3=0.5*(X13-SQRT((X13**2.0)-(4.0*(R3/R1)**2.0)))
      A1x=3.141593*(D1**2.0)/4.0
      Daa=SQRT(((H2-H1)**2.0)+((D2/2.0-D3/2.0)**2.0))
      Dab=3.141593*(D2+D3)/2.0
      Aa=Daa*Dab
      Vf=(A1x/Aa)*(F1to2-F1to3)
      RETURN
      END
```

```
C
C        ***** TUBE-SIDE FLUID PROPERTYIES
C
C     CPT = TUBE-SIDE FLUID Specific Heat (BTU/Lb-R)
C     RHOT = TUBE-SIDE FLUID Density (Lbs/Ft^3)
C     AKTT = TUBE-SIDE FLUID Thermal Cond (BTU/Hr-Ft-R)
C     VISCT = TUBE-SIDE FLUID Viscosity (Lb/Ft-Sec)
C
C
C     SET FLUID THERMAL PROPERTIES
C
      TBARR = (THIN+TCIN)/2.0
      GO TO (5,8),IHXflg
    5 CALL XLITHP(TBARR,RHOT,CPT,VISCT,AKTT)
      CALL HEXEPR(AMWS,PHOT,TBARR,GAMMA,CPSF,RHOSF,VISCST,AKTST,PRMIX)
      GO TO 10
    8 CALL XNAKPR(TBARR,RHOT,CPT,VISCT,AKTT)
      CALL HEXEPR(AMWS,PHOT,TBARR,GAMMA,CPSF,RHOSF,VISCST,AKTST,PRMIX)
   10 WDOTS = 3600.0*WDOTS
      VISCST = VISCST/6.72E-4
      WRITE (6,*) 'TBARR,RHOT,CPT,VISCT,AKTT',TBARR,RHOT,CPT,VISCT,AKTT
      WRITE (6,*) 'AMWS,PHOT,TBARR,GAMMA,CPSF,RHOSF,VISCST,AKTST,PRMIX =
     &',AMWS,PHOT,TBARR,GAMMA,CPSF,RHOSF,VISCST,AKTST,PRMIX
      WRITE (6,*) 'WDOTS,VISCST =',WDOTS,VISCST
      A1 = (THIN-TCOUT) - (THOUT-TCIN)
      IF ((THIN-TCOUT).EQ.(THOUT-TCIN)) THEN
      ALMTD = THIN-TCOUT
      GO TO 15
      ELSE
      A2 = ALOG((THIN-TCOUT)/(THOUT-TCIN))
      ALMTD = A1/A2
      ENDIF
   15 PR = PR
      WRITE (6,*) 'A1, ALMTD, PR =', A1, ALMTD, PR
      GOTO 100
   35 UEST = UNEW
  100 AQ = -2.0*DTUBE
      BQ = (DTUBE**2.0)
      CQ1 = PR*DTUBE
      CQ2 = 144.0*QDOT*(CQ1**2.0)
      CQ3 = UEST*ALMTD*(9.869604)*DTUBE
      CQ = CQ2/CQ3
      PQ = -((AQ**2.0)/3.0)+BQ
      QQ = (2.0*((AQ/3.0)**3.0))-(AQ*BQ/3.0)+CQ
      QBIG = ((PQ/3.0)**3.0)+((QQ/2.0)**2.0)
      AARG = -(QQ/2.0)+SQRT(QBIG)
      ABIG = (ABS(AARG))**0.333333
      BBRG = -(QQ/2.0)-SQRT(QBIG)
      BBIG = (ABS(BBRG))**0.333333
      DOTL = ABIG + BBIG - (AQ/3.0)
      ALSHEL = (ANPLATES+1.0)*DOTL
      AVAL = 0.867
```

```
C
C
C
      SUBROUTINE HRSHEL(IHXflg,UEST,THIN,THOUT,PHOT,TCIN,TCOUT,WDOTS,AMW
     &S,TINS,DENINS,DENSSH,DTUBE,PR,TTUBE,ANPLATES,WDOTT,AKTUBE,Q
     &DOT,DPSHELL,ANTUBES,DPTUBE,DOTL2,ALSHEL,AMSHELL,AMPLATES,
     &AMTUBES,AMINSUL,AMHEADS,AMSTRT,ANETMASS,XMNHEX,NSHELL,AFRIC,UNEW,
     &RETUBE,THC,AMTSHT)
      WRITE (6,*) '     '
      WRITE (6,*) 'DATA INPUT LIST FROM HRSHEL'
      WRITE (6,*) 'IHXflg,UEST,THIN,THOUT,PHOT,TCIN,TCOUT,WDOTS,AMWS,
     &TINS,DENINS,DENSSH,DTUBE,PR,TTUBE,ANPLATES,WDOTT,AKTUBE,QDOT =',
     &IHXflg,UEST,THIN,THOUT,PHOT,TCIN,TCOUT,WDOTS,AMWS,TINS,DENINS,
     &DENSSH,DTUBE,PR,TTUBE,ANPLATES,WDOTT,AKTUBE,QDOT
C
C        SHELL AND TUBE HEAT EXCHANGER DESIGN SUBROUTINE
C        ROUTINE ASSUMES THAT LIQUID IS ON TUBE SIDE
C        GAS IS ON SHELL SIDE.  BELL'S CORRELATION IS USED FOR
C        GAS SIDE HEAT TRANSFER - LYONS IS USED FOR TUBE SIDE
C        LIQUID METAL HEAT TRANSFER, McELLIOT,MCGEE AND LEPPERT
C        IS USED FOR OTHER FLUIDS (LIQUIDS AND GASES)
C
C            ***** OVERALL PARAMETERS *****
C
C     IHXflf = 1, THEN TUBE SIDE FLUID IS LITHIUM
C     IHXflg = 2, THEN TUBE SIDE FLUID IS NaK-78
C     ALMTD = Heat Exchanger Log Mean Temperature Difference
C     QDOT = Heat Rate or Duty (BTU/Hr)
C     UEST = INITIAL VALUE OF Uoverall (BTU/Hr-Ft-R)
C            (50 for GAS-GAS)
C     THIN = HOT SIDE Inlet Temperature (R)
C     THOUT = HOT SIDE Outlet Temperature (R)
C     TCIN = COLD SIDE Inlet Temperature (R)
C     COUT = COLD SIDE Outlet Temperature (R)
C
C            ***** SHELL SIDE DATA *****
C
C     WDOTS = SHELL SIDE FLUID Flowrate (Lbs/Sec)
C     DENSSH = SHELL MATERIAL Density (Lbs/Ft^3)
C
C     ***** SHELL-SIDE FLUID PROPERTIES *****
C
C     CPSF = SHELL-SIDE FLUID Specific Heat (BTU/Lb-R)
C     RHOSF = SHELL-SIDE FLUID Density (Lbs/Ft^3)
C     AKTST = SHELL-SIDE FLUID Thermal Cond (BTU/Hr-Ft-R)
C     VISCST = SHELL-SIDE FLUID Viscosity (Cp)
C
C            ***** TUBE SIDE DATA *****
C
C     DTUBE = Outside TUBE Diameter - (Inches)
C     TTUBE = TUBE Wall Thickness (Inches)
C     WDOTT = TUBE -SIDE Fluid Flowrate (Lbs/Sec)
C     AKTUBE = TUBE Wall Thermal Conductivity (BTU/Hr-Ft-R)
```

```
      FFBN = 0.4307652 + (4.521962E-03*(DOTL)) - (6.335725E-05*(DOTL**2
     1.0)) + (3.716571E-07*(DOTL**3.0))
      GXT = 1560.0*(WDOTS/(DOTL**2.0))
      REXT = (DTUBE*GXT)/(29.0*VISCST)
      RC = 1.0
      IF (REXT-1000.0) 200,150,150
  150 RC = 1.0
      GOTO 300
  200 RC = 0.4812508 + (2.726048E-03*(REXT)) - (7.739889E-06*(REXT**2.)
     1) + (9.960931E-09*(REXT**3.0)) - (4.431738e-12*(REXT**4.0))
  300 FFBP =FFBN*RC
      FFBH = FFBP+0.125
      REXP = FFBP*REXT
      REXH = FFBH*REXT
      AREP = ALOG(REXP)/2.302585093
      AREH = ALOG(REXH)/2.302585093
      AFX = 1.397542 - (0.96108*(AREP)) + (0.064751*(AREP**2.0)) + (0.0
     106305*(AREP**3.0))
      AFRIC = 10.0**AFX
      AJX = -0.359018 - (0.259608*(AREH)) - (0.094385*(AREH**2.0)) + (0
     1.012556*(AREH**3.0))
      AJFAC = 10.0**AJX
C     WRITE (6,*) 'j-FACTOR =',AJFAC
      HS1 = 0.415*CPSF*GXT*FFBH*AJFAC
      HS2 = (AKTST/(CPSF*VISCST))**0.66667
      HSHELL = HS1*HS2
      DPSF = 0.00875*((AJFAC*ALSHEL)/(AVAL*PR*DTUBE*0.4))
      DPSM = 0.001551191*(((ALSHEL*1.0)/(0.4*DOTL))-1.0)
      DPSHELL = (0.3*(DPSF+DPSM)/RHOSF)*((GXT*FFBP)/10000.0)
      PT = PR*DTUBE
      ANTUBES = ((0.7854*(DOTL-DTUBE)**2.0)/(PT**2.0))
      WTUBE = WDOTT/ANTUBES
      AREAT = (0.7854*(DTUBE-(2.0*TTUBE))**2.0)/144.0
      VTUBE = WTUBE/(AREAT*RHOT)
      QTUBE = RHOT*(VTUBE**2.0)/(2.0*32.174*144.0)
      RETUBE = VTUBE*RHOT*DTUBE/(12.0*VISCT)
      DTUBEI = DTUBE-(2.0*TTUBE)
      PRTUBE = (3600*VISCT*CPT)/AKTT
      IF (PRTUBE-0.1) 330,330,340
  330 THC = (12.0*AKTT/DTUBEI)*(7.0+(0.025*(RETUBE*PRTUBE)**0.8))
      GOTO 440
  340 IF (RETUBE-2000.0) 350,350,400
  350 TFRIC=64.0/RETUBE
      THC = 4.364*(12.0*AKTT/DTUBEI)
      GOTO 450
  400 AK = 0.0001
      AKD = AK/DTUBEI
      FRIC1 = ALOG10((AKD/3.7)+(5.74/(RETUBE**0.9)))**2.0
      TFRIC = 0.25/FRIC1
      THC = 0.026*(12.0*AKTT/DTUBEI)*(RETUBE**0.8)*(PRTUBE**0.4)
  435 GOTO 450
  440 IF (RETUBE-2000.0) 442,442,445
```

IF( ) -,0,+

v97 mention here

```
  442 TFRIC=64.0/RETUBE
      GOTO 450
  445 AK = 0.0001
      AKD = AK/DTUBEI
      FRIC1 = ALOG10((AKD/3.7)+(5.74/(RETUBE**0.9)))**2.0
      TFRIC = 0.25/FRIC1
  450 COND2 = 12.0*AKTUBE/TTUBE
      UNEW = 1.0/((1.0/THC)+(1.0/HSHELL)+(1.0/COND2))
      DPTUBE = (2.0*QTUBE) + ((TFRIC*(ALSHEL/DTUBEI))*QTUBE)
      CQ3 = UNEW*ALMTD*(9.869604)*DTUBE
      CQ = CQ2/CQ3
      QQ = (2.0*((AQ/3.0)**3.0))-(AQ*BQ/3.0) + CQ
      QBIG = ((PQ/3.0)**3.0) + ((QQ/2.0)**2.0)
      AARG = -(QQ/2.0)+SQRT(QBIG)
      ABIG = (ABS(AARG))**0.333333
      BBRG = -(QQ/2.0)-SQRT(QBIG)
      BBIG = (ABS(BBRG))**0.333333
      DOTL2 = ABIG + BBIG - (AQ/3.0)
      ERROR = ABS((DOTL-DOTL2)/DOTL)
      IF (ERROR - 0.001) 600,600,35
  600 TMINPR = PHOT*DOTL/(2.0*10000.0)
      TMINSC = (0.005*DOTL) + (0.0001*(DOTL**2.0))
      IF (TMINPR.GT.TMINSC) THEN
      TMIN = TMINPR
      GOTO 650
      ELSE
      TMIN = TMINSC
      ENDIF
  650 AMINSUL = (3.141593*DOTL*(DOTL+ALSHEL)*TINS*(DENINS/1728.0)) + (3.
     &141593*(DOTL2**2.0)*TINS*(DENINS/1728.0))
C     WRITE (6,*) 'TMIN (Inches) =',TMIN
      AMHEADS = 3.141593*(DOTL**2.0)*TMIN*(DENSSH/1728.0)
      AMSHELL = 3.141593*DOTL*(DOTL+ALSHEL)*TMIN*(DENSSH/1728.0)
      AMPLATES = AMPLATES*(2.0*3.141593*((DOTL**2.0)/4.0)*TMIN*(DENSSH/1
     &1728.0))
      AMTSHT = 2.0*3.141593*((DOTL**2.0)/4.0)*2.0*TMIN*(DENSSH/1728.0)
      AMTUBES = 0.785398*((DTUBE**2.0)-(DTUBEI**2.0))*ALSHEL*ANTUBES*(
     1DENSSH/1728.0)
      AMSTRT = 0.05*(AMINSUL+AMHEADS+AMSHELL+AMPLATES+AMTSHT+AMTUBES)
      AMETMASS = AMINSUL+AMHEADS+AMSHELL+AMPLATES+AMTSHT+AMTUBES+AMSTRT
C     WRITE (6,*) '      '
C     WRITE (6,*) 'SHELL AND TUBE HEAT EXCHANGER DESIGN CODE'
C     WRITE (6,*) '      '
C     WRITE (6,*) 'SHELLSIDE DP =',DPSHELL
C     WRITE (6,*) 'SHELLSIDE H =',HSHELL
C     WRITE (6,*) 'FRIC-FAC =',AFRIC
C     WRITE (6,*) 'UNEW =',UNEW
C     WRITE (6,*) 'NUMBER OF TUBES IN BUNDLE =',ANTUBES
C     WRITE (6,*) 'Tube Side Reynolds Number =',RETUBE
C     WRITE (6,*) 'Tube Conductance =',COND2
C     WRITE (6,*) 'Tube Side Pressure Drop (PSID) =',DPTUBE
C     WRITE (6,*) 'Tube Side Hg (BTU/Hr-sq.Ft-R) =',THC
C     WRITE (6,*) 'TUBE DIA (Inches) =',DTUBE
```

```
C     WRITE (6,*) 'TUBE WALL THICKNESS (Inches) =',TTUBE
C     WRITE (6,*) 'DOTL2 (Inches) =',DOTL2
C     WRITE (6,*) 'LENGTH (Inches) =',ALSHEL
C     WRITE (6,*) '     '
C     WRITE (6,*) 'INSULATION MASS (Lbs) =',AMINSUL
C     WRITE (6,*) 'HEAD MASS (Lbs) =',AMHEADS
C     WRITE (6,*) 'SHELL MASS (Lbs) =',AMSHELL
C     WRITE (6,*) 'PLATE MASS (Lbs) =',AMPLATES
C     WRITE (6,*) 'TUBE SHEETS MASS (Lbs) =',AMTSHT
C     WRITE (6,*) 'TUBE MASS (Lbs) =',AMTUBES
C     WRITE (6,*) 'STRUCTURE AND BRACKETS MASS (Lbs) =',AMSTRT
C     WRITE (6,*) 'Net Mass of Shell and Tube Unit (Lbs) =',ANETMASS
      VNAK1 = 0.785398*(DTUBE**2.0)*ALSHEL*ANTUBES
      VNAK2 = 0.523599*(DOTL**3.0)
      XMNHEX = (VNAK1+VNAK2)*(RHOT/1728.0)
      RETURN
      END
```

```
C
C
C
      SUBROUTINE HPMAN(Iflud,Iflg2,Cman,Hman,Gap,Pitch,Dcan,Dhp,Rc,
     &Rb,Tf,TKfin,TKcan,TKbraze,TKhP,XNf,XNpipes,XNexpipes,XMW,Pman,Tman
     &,RHOcan,RHObraze,THICKman,Wman,Qrad,XMANmas,DPman,DTfilm,XMNMAN)
C
C     SUBROUTINE TO DETERMINE THE MASS AND PERFORMANCE OF A MANIFOLD
C     WHICH USES LIQUID OR GAS TO TRANSFER HEAT TO THE HEAT PIPES OF
C     A HEAT PIPE RADIATOR.  THE MANIFOLD CONFIGURATION CONSISTS OF
C     A SINGLE ROW OF TUBE CANS (BRAZED TO HEAT PIPES) (FINS OPTIONAL)
C
C     INPUT VARIABLES REQUIRED
C          Iflg2 = FLAG TO SET MANIFOLD WORKING FLUID
C                1 = He-Xe MIXTURE
C                2 = NaK
C          Hman = MANIFOLD HEIGHT (Feet)
C          Gap = MANIFOLD WIDTH (Feet)
C          Pitch = DISTANCE BETWEEN CAN (HEAT PIPES) CENTERLINES (Feet)
C          XNpipes = NUMBER OF HEAT PIPES IN RADIATOR
C          XNEXpipes = NUMBER OF REDUBDENT HEAT PIPES IN RADIATOR
C          Dcan = OUTSIDE DIAMETER OF MANIFOLD BRAZE CANS (Feet)
C          Dhp = INSIDE DIAMETER OF HEAT PIPE (Feet)
C          Rc = MANIFOLD BRAZE CAN INSIDE RADIUS (Feet)
C          Rb = BRAZE JOINT INSIDE RADIUS (Feet)
C          Tf = FIN THICKNESS (Feet)
C          TKfin = THERMAL CONDUCTIVITY OF FIN MATERIAL (BTU/Hr-Ft-R)
C          TKcan = THERMAL CONDUCTIVITY OF MANIFOLD CAN MATERIAL (B/HFR)
C          TKbraze = THERMAL CONDUCTIVITY OF MANIFOLD BRAZE ALLOY (")
C          TKhp = THERMAL CONDUCTIVITY OF HEAT PIPE WALL MATERIAL (")
C          XNf = TOTAL NUMBER OF FINS FOR THE MANIFOLD HEIGHT
C          RHOcan = DENSITY OF MANIFOLD MATERIAL (Lb/cu-Ft)
C          RHObraze = DENSITY OF BRAZE MATERIAL (Lb/cu-Ft)
C          THICKman = MANIFOLD MATERIAL THICKNESS (Feet)
C          Pman = MANIFOLD INLET PRESSURE (PSIA)
C          Tman = MANIFOLD INLET TEMPERATURE (deg-R)
C          Wman = MANIFOLD FLOWRATE (LBS/HR)
C          Qman = MANIFOLD AND RADIATOR HEAT LOAD (BTU/HR)
C          XMW = MOLECULAR WEIGTH OF MANIFOLD WORKING FLUID
C
C     OUTPUT VARIABLES
C          XMANmas = MANIFOLD MASS (Lbs)
C          DPman = MANIFOLD PRESSURE DROP (PSIA)
C          DTfilm = MANIFOLD FILM TEMPERATURE DROP (deg-R)
C
      Qman = 3413.0*Qrad
      PI = 3.14159265
      Ao = (PI*Dcan*(1.0-(XNf*Tf))*Hman) + (2.0*XNf*Hman*((Pitch*Gap)-
     &((PI/4.0)*(Dcan**2.0))))
      Afo = Ao - (PI*Dcan*Hman*(1.0-(XNf*Tf)))
      X = 12.0*(Gap-Dcan)/2.0
      Xe = X*((1.0+(12.0*Tf))/(2.0*X))*(1.0+(0.35*ALOG(X/(12.0*Dcan))))
```

```
C     WRITE (6,*) '88888*****88888*****88888*****88888'
C     WRITE (6,*) 'Ao, Afo, X, Xe =',Ao,Afo,X,Xe
C
C     MANIFOLD CONVECTIVE HEAT TRANSFER COEFFICIENT
C
      GOTO (10,20),Ifig2
   10 CALL HEXEPR(XMW,Pman,Tman,GAMMA,CP,RHO,AMU,TK,Prmix)
      GOTO 30
   20 CALL XNAKPR(Tman,RHO,CP,AMU,TK)
   30 AMU = 3600.0*AMU
      Amin = ((Gap-Dcan)*Hman) - (Gap*XNf*Tf)
      Gmax = 3600.0*Wman/Amin
      REYman = Gmax*Dcan/AMU
C     WRITE (6,*) 'Amin, Gmax, REYman =',Amin,Gmax,REYman
      Fiso = 10.0**((1.714012)-(1.349954*(ALOG10(REYman)))+(0.216271*
     &((ALOG10(REYman))**2.0))-(0.012421*((ALOG10(REYman))**3.0)))
      XJ = 10.0**((0.321848)-(0.840808*(ALOG10(REYman)))+(0.081598*((
     &ALOG10(REYman))**2.0))-(0.004631*((ALOG10(REYman))**3.0)))
C     WRITE (6,*) 'Fiso, XJ =',Fiso,XJ
      Pr = AMU*CP/TK
      Hcman = XJ*CP*Gmax/(Pr**0.6667)
      Gc = 4.16975E+08
      XNt = XNpipes+XNexpipes
C     WRITE (6,*) 'Pr, Hcman, Gc, XNt =',Pr,Hcman,Gc,XNt
C     MANIFOLD PRESSURE DROP
      Vmax = Gmax/(3600.0*RHO)
      Qmax = RHO*(Vmax**2.0)/(2.0*32.174*144.0)
      DPman = (4.0*Fiso*XNt*((Gmax**2.0)/(288.0*Gc*RHO))) + (0.9*Qmax)
C     HEAT PIPE EVAPORATOR HEAT TRANSFER COEFF (VERY VERY ROUGH)
      Qflux = Qman/(PI*Dcan*Hman*XNt)
      TO = (Tman/1.8) - 273.2
C     WRITE (6,*) 'Vmax, Qmax, DPman,Qflux, TO =',Vmax,Qmax,DPman,Qflux,
C    &TO
      CALL Fluidprop(Ifluid,TO,Xliqden,Vapden,Xliqvisc,Vapvisc,PO,Surf
     &ten,Xlhv,Xk,Xmwfluid,Tcfluid)
C     WRITE (6,*) 'THERMAL COND OF HEAT PIPE FLUID IS (**) =',Tcfluid
      Hevap = (Tcfluid/0.00413656)/(0.010*Dhp)
C     FINISH UP FIN CALCULATION
      IF (Tf.LE.0.0) THEN
      Ha = Hcman
      GOTO 50
      ELSE
      XM = SQRT((2.0*Hcman)/(TKfin*Tf))
      Xe=Xe/12.0
      Efin = (1.0/(XM*Xe))*TANH(XM*Xe)
      Ecorr = 1.2*Efin - 0.2
      IF (Ecorr.LE.0.1) THEN
      Ecorr = Efin
      GO TO 45
      ELSE
      CONTINUE
      ENDIF
```

```
   45 Ha = Hcman*(1.0-(1.0-Ecorr)*(Afo/Ao))
      ENDIF
C     WRITE (6,*) 'Hevap, XM, Efin, Ecorr, Ha =',Hevap,XM,Efin,Ecorr,Ha
C     COMPUTE FILM TEMPERATURE DROP
   50 Rhp = Dhp/2.0
      Ro = Dcan/2.0
      D1 = Qflux/(2.0*PI*Rhp*Hman)
      D2 = 2.0*PI*Rhp*Hman/(Ha*Ao)
      D3 = Rhp*ALOG(Ro/Rc)/TKcan
      D4 = Rhp*ALOG(Rc/Rb)/TKbraze
      D5 = Rhp*ALOG(Rb/Rhp)/TKhp
      D6 = (1.0/Hevap)
      DTfilm = D1*(D2+D3+D4+D5+D6)
C     WRITE (6,*) 'D1,D2,D3,D4,D5,D6 =',D1,D2,D3,D4,D5,D6
C     WRITE (6,*) 'DTfilm =',DTfilm
C     MASS ESTIMATE
C     CAN MASS
      Vcan = (PI*Dcan*Hman*(Ro-Rc)) + ((PI/4.0)*(Dcan**2.0)*(Ro-Rc))
      XMcan = XNt*Vcan*RHOcan
C     WRITE (6,*) 'Vcan,XMcan =',Vcan,XMcan
C     MANIFOLD WALL MASS
      Vman = (((2.0*Hman)+(2.0*Gap))*Cman*THICKman) - (XNt*(PI/4.0)*(Dca
     &n**2.0)*THICKman)
      XMwall = Vman*RHOcan
C     WRITE (6,*) 'Vman,XMwall =',Vman,XMwall
C     BRAZE MASS
      Vbraze = (2.0*PI*Rc*Hman*(Rc-Rb))
      XMbraze = XNt*Vbraze*RHObraze
C     WRITE (6,*) 'Vbraze,XMbraze =',Vbraze,XMbraze
C     TOTAL MANIFOLD MASS
      XMANmas = XMcan+XMwall+XMbraze
      VOLnak = (Cman*Hman*Gap) - (XNt*0.785398*(Dcan**2.0)*Hman)
      XMNMAN = VOLnak*RHO
C     WRITE (6,*) 'Cman,Hman,Gap,XNt,Dcan =',Cman,Hman,Gap,XNt,Dcan
C     WRITE (6,*) 'XMANmas,VOLnak,XMNMAN =',XMANmas,VOLnak,XMNMAN
      RETURN
      END
```

```
C
C
C
      SUBROUTINE HRPIPE(XN9,R9,Dp,SUMLEN,Vpipe,Tnak,Pnak,
     &THICKP,RHOPIP,THICKI,RHOINS,DPPIPE,PIPNAK,PIPMAS)
C
C     NaK PIPING SYSTEM DESIGN AND MASS ESTIMATION ROUTINE
C
C      ********* VARIABLE DEFIED ***********
C
C     XN9 = NUMBER OF 90 DEGREE ELBOWS OR EQUIVALENT IN PIPE SYSTEM
C     R9 = AVERAGE RADIUS FOR 90 DEGREE ELBOWS (INCHES)
C     Dp = INSIDE PIPE DIAMETER (INCHES)
C     SUMLEN = TOTAL LENGTH OF PIPE SYSTEM (INCHES)
C     Vpipe = NAK VELOCITY IN PIPES (FT/SEC)
C     Tnak = Nak TEMPERATURE (deg-R)
C     Pnak = Nak PRESSURE (psia)
C     THICKP = PIPE WALL THICKNESS (INCHES)
C     RHOPIP = PIPE WALL DENSITY (LB/cu-FT)
C     THICKI = PIPE INSULATION THICKNESS (INCHES)
C     RHOINS = PIPE INSULATION DENSITY (LB/cu-FT)
C     DPPIPE = PIPE SYSTEM PRESSURE DROP (PSID)
C     PIPMAS = PIPE SYSTEM MASS (LBS)
C     PIPNAK = MASS OF NaK IN PIPE SYSTEM (LBS)
C
      IF (THICKP.EQ.0.0) THICKP = (Pnak*Dp)/15000.0
      CALL XNAKPR(Tnak,RHO,CP,VIS,TK)
      REnak = Vpipe*Dp*RHO/(12.0*VIS)
      Qnak = RHO*(Vpipe**2.0)/(2.0*32.174*144.0)
      X1 = ALOG10(R9/Dp)
      BETA = -0.589233-(1.334185*X1)+(2.424496*(X1**2.0))-(1.272074*(X1*
     &*3.0))+(0.148518*(X1**4.0))
      AK9 = 10.0**BETA
      X2 = ALOG10(REnak)
      Cfc = 6.723115-(1.517276*(X2))+(0.093726*(X2**2.0))
      DPelbo = XN9*Cfc*AK9*Qnak
      ROUGH = 0.0001
      FR1 = (ALOG10((ROUGH/(3.7*Dp))+(5.74/(REnak**0.9))))**2.0
      FRIC = 0.25/FR1
      DPp = FRIC*(SUMLEN/Dp)*Qnak
      DPPIPE = DPelbo+DPp
C
C     PIPING MASS ALGORITHM
C
      DOp = Dp + (2.0*THICKP)
      DIp = Dp
      Axp = 0.785398*((DOp**2.0)-(DIp**2.0))
      XMPIPES = Axp*SUMLEN*(RHOPIP/1728.0)
      DOi = DOp + (2.0*THICKI)
      AXPins = 0.785398*((DOi**2.0)-(DOp**2.0))
      XMPINS = AXPins*SUMLEN*(RHOINS/1728.0)
      XMEL = XN9*0.785398*R9*2.0*Axp*(RHOPIP/1728.0)
```

```
      XMELin = XN9*0.785398*R9*2.0*AXPins*(RHOINS/1728.0)
      PIPMAS = XMPIPES+XMPINS+XMEL+XMELin
      AXnak = 0.785398*(DIp**2.0)
      Xnak1 = AXnak*SUMLEN*(RHO/1728.0)
      Xnak2 = AXnak*XN9*0.785398*R9*2.0*(RHO/1728.0)
      PIPNAK = Xnak1+Xnak2
      RETURN
      END
```

```
C
C
C
      SUBROUTINE PUMP(Tnak,Wnak,DPPIPE,DPHX,DPMANIF,DPLOOP,Phyd,XMPUMP)
C
C     PUMP MASS ESTIMATE
C
C
C       *********** VARIABLES DEFINED ***********
C
C     Tnak = NAK INLET TEMPERATURE (deg-R)
C     Wnak = NAK FLOWRATE (LBS/SEC)
C     DPPIPE = PIPING SYSTED PRESSURE DROP (PSID)
C     DPHX = NAK SIDE HEAT EXCHANGER PRESSURE DROP (PSID)
C     DPMANIF = NAK MANIFOLD PRESSURE DROP
C     Phyd = HYDRAULIC POWER REQUIRED FROM PUMP (WATTS)
C     XMPUMP = E-M PUMP MASS (LBS)
C
      CALL XNAKPR(Tnak,RHO,CP,VIS,TK)
      GPM = 446.897*(Wnak/RHO)
      DPLOOP = DPPIPE+DPHX+DPMANIF
      Phyd = 0.435*DPLOOP*GPM
      XMPUMP = 37.0 + 0.323*Phyd
C     WRITE (6,*) '    '
C     WRITE (6,*) 'PUMP POWER REQUIRED (WATTS) (HYDRAULIC) =',Phyd
C     WRITE (6,*) 'PUMP MASS (Lbs) =',XMPUMP
      RETURN
      END
```

```
C
C
C
      SUBROUTINE VACMAS(Tnak,XMNPIP,XMNMAN,XMNHEX,XMNVAC,XMVAC)
C
C     VOLUME ACCUMULATOR MASS ESTIMATE
C
C     VOLUME ACCUMULATOR NAK VOLUME IS ESTIMATED TO BE 1.20 TIMES THE
C     CHANGE IN LOOP NAK VOLUME BETWEEN 560 R AND THE OPERATING TEMP.
C
C        ********** VARIABLES DEFINED **********
C
C     Tnak = NaK TEMPERATURE (deg-R)
C     XMNPIP = NAK MASS IN PIPING SYSTEM (Lbs)
C     XMNMAN = NAK MASS IN RADIATOR MANIFOLD (Lbs)
C     XMNHEX = NAK MASS IN HEAT REJECTION HEAT EXCHANGER (Lbs)
C     XMNVAC = NAK VOLUME IN VOLUME ACCUMULATOR (cu-IN)
C     XMVAC = VOLUME ACCUMULATOR MASS (WET) (LBS)
      A11 = 560.0
      CALL XNAKPR(A11,RHOREF,CP,VIS,TK)
      CALL XNAKPR(Tnak,RHONAK,CP2,VIS2,TK2)
      XMNTOT = XMNPIP+XMNMAN+XMNHEX
      VOLACC = (((RHOREF-RHONAK)/RHONAK)*(XMNTOT/RHONAK)*1728.0)*1.2
      IF (VOLACC.LT.0.0) THEN
      XMNVAC = 0.0
      XMVAC = 0.0
      RETURN
      ELSE
      A12 = 0.66*ALOG10(VOLACC) - 0.28
      ENDIF
      XMmet = 10.0**A12
      XMNvac = (VOLACC/1728.0)*RHONAK
      XMVAC = XMmet+XMNvac
C     WRITE (6,*) 'VOLUME ACCUMULATOR Nak MASS (Lbs) =',XMNvac
C     WRITE (6,*) 'VOLUME ACCUMULATOR MASS (Lbs) =',XMVAC
      RETURN
      END
```

```
C
C
C
      SUBROUTINE HRDUCT(XN9,R9,Dp,SUMLEN,Vpipe,TGAS,PGAS,THICKP,RHOPIP,
     &THICKI,RHOINS,XMW,DPDUCT,DUCMAS)
C
C     HE-XE DUCT MASS AND PRESSURE DROP FOR DIRECT CYCLE BRAYTON
C
C      ************** VARIABLES DEFINED ****************
C
C     XN9 = NUMBER OF 90 DEGREE ELBOWS OR EQUIVALENT IN PIPE SYSTEM
C     R9 = AVERAGE RADIUS FOR 90 DEGREE ELBOWS (INCHES)
C     Dp = INSIDE DUCT DIAMETER (INCHES)
C     SUMLEN = TOTAL LENGTH OF DUCT SYSTEM (INCHES)
C     Vpipe = GAS VELOCITY IN DUCTS (FT/SEC)
C     TGAS = GAS TEMPERATURE (deg-R)
C     PGAS = GAS PRESSURE (psia)
C     THICKP = DUCT WALL THICKNESS (INCHES)
C     RHOPIP = DUCT WALL DENSITY (LB/cu-FT)
C     THICKI = DUCT INSULATION THICKNESS (INCHES)
C     RHOINS = DUCT INSULATION DENSITY (LB/cu-FT)
C     XMW = GAS MOLECULAR WEIGHT
C     DPDUCT = DUCT SYSTEM PRESSURE DROP (PSID)
C     DUCMAS = DUCT SYSTEM MASS (LBS)
C
      CALL HEXEPR(XMW,PGAS,TGAS,GMA,CP,RHO,VIS,TK,PRGAS)
      REnak = Vpipe*Dp*RHO/(12.0*VIS)
      Qnak = RHO*(Vpipe**2.0)/(2.0*32.174*144.0)
      X1 = ALOG10(R9/Dp)
      BETA = -0.589233-(1.334185*X1)+(2.424496*(X1**2.0))-(1.272074*(X1*
     &*3.0))+(0.148518*(X1**4.0))
      AK9 = 10.0**BETA
      X2 = ALOG10(REnak)
      Cfc = 6.723115-(1.517276*(X2))+(0.093726*(X2**2.0))
      DPelbo = XN9*Cfc*AK9*Qnak
      ROUGH = 0.0001
      FR1 = (ALOG10((ROUGH/(3.7*Dp))+(5.74/(REnak**0.9))))**2.0
      FRIC = 0.25/FR1
      DPp = FRIC*(SUMLEN/Dp)*Qnak
      DPDUCT = DPelbo+DPp
C
C     PIPING MASS ALGORITHM
C
      DOp = Dp + (2.0*THICKP)
      DIp = Dp
      Axp = 0.785398*((DOp**2.0)-(DIp**2.0))
      XMPIPES = Axp*SUMLEN*(RHOPIP/1728.0)
      DOi = DOp + (2.0*THICKI)
      AXPins = 0.785398*((DOi**2.0)-(DOp**2.0))
      XMPINS = AXPins*SUMLEN*(RHOINS/1728.0)
      XMEL = XN9*0.785398*R9*Axp*(RHOPIP/1728.0)
      XMELin = XN9*0.785398*R9*AXPins*(RHOINS/1728.0)
```

```
      DUCMAS = XMPIPES+XMPINS+XMEL+XMELin
      RETURN
      END
```

```
C
C
C
      SUBROUTINE CONMAN(Ifluid,Cman,Hman,Gap,THICKins,RHOins,Tout,
     &Tbraze,TKcan,TKbraze,TKhP,XNpipes,XNexpipes,Pin,Tin,Xin,RHOpip,
     &RHOcan,RHObraze,THICKman,Thtpip,Wman,Qrad,XMANmas,DPman,DTFsup,
     &Ar,Gt,V,Dh,Cgt,Rel,Hl,Xtt,Rev,
     &DTFcon,DTFsub,DTfilm)
C     WRITE (6,*) 'FROM CONMAN - Ifluid,Cman,Hman,Gap,THICKins,RHOins ='
C    &,Ifluid,Cman,Hman,Gap,THICKins,RHOins
C     WRITE (6,*) 'Tout,Tbraze,TKcan,TKbraze,TKhp =',Tout,Tbraze,TKcan,
C    &TKbraze,TKhp
C     WRITE (6,*) 'XNpipes,XNexpipes,Pin,Tin,Xin =',XNpipes,XNexpipes,
C    &Pin,Tin,Xin
C     WRITE (6,*) 'RHOpip,RHOcan,RHObraze,THICKman,Thtpip =',RHOpip,RHOc
C    &an,RHObraze,THICKman,Thtpip
C     WRITE (6,*) 'Wman,Qrad =',Wman,Qrad
C
      COMMON /CNFL/ DL, DV, VF, VG, HF, HG, HFG, SF, SG,
     &              SFG, Cl, Cv, TKl, TKv, Prl, Prv, Vl, Vv
C     SUBROUTINE TO DETERMINE THE MASS AND PERFORMANCE OF A CONDENSING
C     MANIFOLD FOR POTASSIUM WHICH TRANSFERS HEAT TO THE HEAT PIPES OF
C     A HEAT PIPE RADIATOR.  THE MANIFOLD CONFIGURATION CONSISTS OF
C     A SQUARE PASSAGE WITH HEAT PIPES BRAZED TO ITS OD.
C
C     VARIABLES
C          Ifluid = FLAG TO IDENTIFY HEAT PIPE WORKING FLUID
C          Cman = MANIFOLD CIRCUMFERENCE OR LENGTH (FEET)
C          Hman = MANIFOLD HEIGHT (FEET)
C          Gap = MANIFOLD WIDTH (Feet)
C          XNpipes = NUMBER OF PRIMARY HEAT PIPES IN RADIATOR
C          XNexpipes = NUMBER OF REDUNDENT HEAT PIPES IN RADIATOR
C          Tbraze = BRAZE JOINT THICKNESS (Feet)
C          TKcan = THERMAL CONDUCTIVITY OF MANIFOLD CAN MATERIAL (B/HFR)
C          TKbraze = THERMAL CONDUCTIVITY OF MANIFOLD BRAZE ALLOY (")
C          TKhp = THERMAL CONDUCTIVITY OF HEAT PIPE WALL MATERIAL (")
C          RHOcan = DENSITY OF MANIFOLD MATERIAL (Lb/cu-Ft)
C          RHObraze = DENSITY OF BRAZE MATERIAL (Lb/cu-Ft)
C          THICKman = MANIFOLD MATERIAL THICKNESS (Feet)
C          Thtpip = HEAT PIPE WALL THICKNESS (FEET)
C          Pin = MANIFOLD INLET PRESSURE (PSIA)
C          Tin = MANIFOLD INLET TEMPERATURE (deg-R)
C          Xin = MANIFOLD INLET QUALITY (LIQUID FRACTION)
C          Wman = MANIFOLD FLOWRATE (LBS/HR)
C          Qman = MANIFOLD AND RADIATOR HEAT LOAD (BTU/HR)
C          XMW = MOLECULAR WEIGTH OF MANIFOLD WORKING FLUID
C
C     OUTPUT VARIABLES
C          XMANmas = MANIFOLD MASS (Lbs)
C          DPman = MANIFOLD PRESSURE DROP (PSIA)
C          DTfilm = MANIFOLD FILM TEMPERATURE DROP (deg-R)
C
      Qman = 3413.0*Qrad
```

```
C
C     MANIFOLD CONVECTIVE HEAT TRANSFER COEFFICIENT
C
      CALL KPRP(Xin,Pin,Tin,DL,DV,HF,HG,HFG,SF,SG,SFG,VF,VG)
      CALL KTRN(Xin,Pin,Tin,Cl,Cv,TKl,TKv,Prl,Prv,Vl,Vv)
C     WRITE (6,*) 'Xin,Pin,Tin,DL,DV,HF,HG,HFG,SF,SG,SFG,VF,VG =',Xin,
C    &Pin,Tin,DL,DV,HF,HG,HFG,SF,SG,SFG,VF,VG
C     WRITE (6,*) 'Cl,Cv,TKl,TKv,Prl,Prv,Vl,Vv =',Cl,Cv,TKl,TKv,Prl,PRv,
C    &Vl,Vv
C
C
C
      Ax = Gap*Hman
      Dh = (4.0*Ax)/((2.0*Gap)+(2.0*Hman))
C
C     NOTE THAT CONDENSER HAS TWO SIDES - 1/2 THE HEAT PIPES ARE
C     ATTACHED TO ALTERNATING SIDES OF THE MANIFOLD BOX
C
      Ac = 2.0*(Hman*Cman)/(XNpipes+XNexpipes)
      DX = Ac/Hman
      Wman = Wman
      X = Xin
      CH = Hman
      CW = Gap
      ETA = 0.000005
      Qflux = Qman/(2.0*Hman*Cman)
      JHP = IFIX(XNpipes+XNexpipes)
C     WRITE (6,*) 'Ax,Dh,Ac,DX,Wman,X,CH,CW,ETA,Qflux,JHP =',Ax,Dh,Ac,DX
C    &,Wman,X,CH,CW,ETA,Qflux,JHP
C
C     COMPUTE SATURATION TEMP: EQUATION IS FOR POTASSIUM ONLY
C
      Tsat = (-7633.6)/(ALOG10(Pin)-5.279)
C     WRITE (6,*) 'Tsat FROM 3650 (R) =',Tsat
      IF (Tin.GT.Tsat) THEN
      Qdesup = Wman*Cv*(Tin - Tsat)
      Qcondn = Wman*HFG
      Qsubc = Qman - Qdesup - Qcondn
C     WRITE (6,*) 'Qdesup,Qcondn,Qsubc FROM 3661=',Qdesup,Qcondn,Qsubc
      JNSUP = (Qdesup/Qman)*JHP
      JNCON = (Qcondn/Qman)*JHP
      JNSUB = (Qsubc/Qman)*JHP
      IF (JNSUP.EQ.0) JNSUP = 1
      IF (JNCON.EQ.0) JNCON = 1
      IF (JNSUB.EQ.0) JNSUB = 1
C     WRITE (6,*) 'JNSUP, JNCON, JNSUB =',JNSUP,JNCON,JNSUB
      GO TO 70
      ELSE
      GO TO 20
      ENDIF
   20 IF (Tin.EQ.Tsat) THEN
      Qdesup = 0.0
```

```
      Qsubc = Wman*Cl*(Tsat - Tout)
      Qcondn = Qman - Qsubc
C     WRITE (6,*) 'Qdesup,Qcondn,Qsubc FROM 3674=',Qdesup,Qcondn,Qsubc
      JNSUP = 0
      JNCON = (Qcondn/Qman)*JHP
      JNSUB = JHP - JNCON
      IF (JNCON.EQ.0) JNCON = 1
      IF (JNSUB.EQ.0) JNSUB = 1
C     WRITE (6,*) 'JNSUP, JNCON, JNSUB =',JNSUP,JNCON,JNSUB
      GO TO 80
      ELSE
      GO TO 30
      ENDIF
   30 IF (Tin.LT.Tsat) THEN
      Qdesup = 0.0
      Qcondn = 0.0
      Qsubc = Qman
C     WRITE (6,*) 'Qdesup,Qcondn,Qsubc FROM 3687=',Qdesup,Qcondn,Qsubc
      JNSUP = 0
      JNCON = 0
      JNSUB = JHP
      IF (JNSUB.EQ.0) JNSUB = 1
C     WRITE (6,*) 'JNSUP, JNCON, JNSUB =',JNSUP,JNCON,JNSUB
      GO TO 90
      ELSE
      GO TO 70
      ENDIF
   70 CALL CVAP(Wman, CH, CW, DX, ETA, Hc, DPnet1,Ar,Gt,V,Dh,Rev,Hl)
C     WRITE (6,*) 'INFO FROM AFTER CVAP CALL IN CONMAN'
C     WRITE (6,*) 'Wman,CH,CW,DX,ETA,Hc,DPnet1,Ar,Gt,V,Dh,Rev,Hl =',Wman
C    &,CH,CW,DX,ETA,Hc,DPnet1,Ar,Gt,V,Dh,Rev,Hl
      Hcman = Hc
      Tman = Tin
      T0 = (Tman/1.8) - 273.2
      CALL Fluidprop(Ifluid,T0,Xliqden,Vapden,Xliqvisc,Vapvisc,P0,Surf
     &ten,Xlhv,Xk,Xmwfluid,Tcfluid)
      Hevap = (Tcfluid/0.00413656)/(0.0083)
      Ha = Hcman
C     COMPUTE FILM TEMPERATURE DROP FOR DESUPERHEATER
      D1 = Qflux
      D2 = 1.0/Ha
      D3 = THICKman/TKcan
      D4 = Tbraze/TKbraze
      D5 = Thtpip/TKhp
      D6 = 1.0/Hevap
      Usup = 1.0/(D2+D3+D4+D5+D6)
      DTFsup = D1*(D2+D3+D4+D5+D6)
C     WRITE (6,*) 'Qflux, Usup, DTFsup =',Qflux,Usup,DTFsup
C     WRITE (6,*) 'Hevap,Ha,D1,D2,D3,D4,D5,D6,DTFsup =',Hevap,Ha,D1,D2,
C    &D3,D4,D5,D6,DTFsup
C
   80 X=Xin/2.0
```

```
      CALL COND(Wman, X, CH, CW, DX, ETA, Hc, DPnet2,Ar,Gt,V,Dh,Cgt,Rel,
     & Hl,Xtt,Rev)
C     WRITE (6,*) 'INFO FROM AFTER COND CALL IN CONMAN'
C     WRITE (6,*) 'Wman,X,CH,CW,DX,ETA,Hc,DPnet2,Ar,Gt,V,Dh,Rev,Cgt,Rel,
C    &Hl,Xtt,Rev =',Wman,X,CH,CW,DX,ETA,Hc,DPnet2,Ar,Gt,V,Dh,Rev,Cgt,Rel
C    &,Hl,Xtt,Rev
      Hcman = Hc
      Tman = Tin
      TO = (Tman/1.8) - 273.2
      CALL Fluidprop(Ifluid,TO,Xliqden,Vapden,Xliqvisc,Vapvisc,PO,Surf
     &ten,Xlhv,Xk,Xmwfluid,Tcfluid)
      Hevap = (Tcfluid/0.00413656)/(0.0083)
      Ha = Hcman
C     COMPUTE FILM TEMPERATURE DROP FOR CONDENSER
      D1 = Qflux
      D2 = 1.0/Ha
      D3 = THICKman/TKcan
      D4 = Tbraze/TKbraze
      D5 = Thtpip/TKhp
      D6 = 1.0/Hevap
      Ucon = 1.0/(D2+D3+D4+D5+D6)
      DTFcon = D1*(D2+D3+D4+D5+D6)
C     WRITE (6,*) 'Qflux, Ucon, DTFcon =',Qflux,Ucon,DTFcon
C     WRITE (6,*) 'Hevap,Ha,D1,D2,D3,D4,D5,D6,DTFcon =',Hevap,Ha,D1,D2,
C    &D3,D4,D5,D6,DTFcon
C
   90 CALL CLIQ(Wman, CH, CW, DX, ETA, Hc, DPnet3,Ar,Gt,V,Dh,Rev,Hl)
C     WRITE (6,*) 'INFO FROM AFTER CLIQ CALL IN CONMAN'
C     WRITE (6,*) 'Wman,CH,CW,DX,ETA,Hc,DPnet3,Ar,Gt,V,Dh,Rev,Hl =',
C    &Wman,CH,CW,DX,ETA,Hc,DPnet3,Ar,Gt,V,Dh,Rev,Hl
      Hcman = Hc
      Tman = Tin
      TO = (Tman/1.8) - 273.2
      CALL Fluidprop(Ifluid,TO,Xliqden,Vapden,Xliqvisc,Vapvisc,PO,Surf
     &ten,Xlhv,Xk,Xmwfluid,Tcfluid)
      Hevap = (Tcfluid/0.00413656)/(0.0083)
      Ha = Hcman
C     COMPUTE FILM TEMPERATURE DROP FOR SUBCOOLER
      D1 = Qflux
      D2 = 1.0/Ha
      D3 = THICKman/TKcan
      D4 = Tbraze/TKbraze
      D5 = Thtpip/TKhp
      D6 = 1.0/Hevap
      Usub = 1.0/(D2+D3+D4+D5+D6)
      DTFsub = D1*(D2+D3+D4+D5+D6)
C     WRITE (6,*) 'Qflux, Usub, DTFsub =',Qflux,Usub,DTFsub
C     WRITE (6,*) 'Hevap,Ha,D1,D2,D3,D4,D5,D6,DTFsub =',Hevap,Ha,D1,D2,
C    &D3,D4,D5,D6,DTFsub
C
C     COMPUTE AVERAGE FILM DROP TO BE USED FOR RADIATOR DESIGN
C
      ANSUP = FLOAT(JNSUP)
```

```
4137          ANCON = FLOAT(JNCON)
4138          ANSUB = FLOAT(JNSUB)
4139          AHP = FLOAT(JHP)
4140          DTfilm = ((ANCON/AHP)*DTFcon)
4141         &+((ANSUB/AHP)*DTFsub)
4142          DPman = DPnet1+DPnet2+DPnet3
4143   C      WRITE (6,*) 'DTfilm, DPman =', DTfilm, DPman
4144   C      MASS ESTIMATE
4145   C      MANIFOLD METAL MASS
4146          Vman = (((2.0*Hman)+(2.0*Gap))*Cman*THICKman)
4147          XMwall = Vman*RHOcan
4148   C      MANIFOLD TO HEAT PIPE BRAZE MASS
4149          Vbraze = 2.0*Hman*Cman*Tbraze
4150          XMbraze = Vbraze*RHObraze
4151   C      TOTAL FLAT HEAT PIPE EVAPORATOR MASS
4152          Vheatpip = 4.0*Hman*Cman*Thtpip
4153          XMhtpip = RHOpip*Vheatpip
4154   C      WRITE (6,*) 'Vman,XMwall,Vbraze,XMbraze,Vheatpip,XMhtpip =',Vman,
4155   C     &XMwall,Vbraze,XMbraze,Vheatpip,XMhtpip
4156   C      INSULATION MASS
4157          Vins = ((2.0*Hman)+(2.0*Gap))*Cman*THICKins
4158          XMins = Vins*RHOins
4159   C      LIQUID INVENTORY IN MANIFOLD
4160          Vliq =  FLOAT(JNSUB/JHP)*Hman*Gap*Cman
4161          XMliqin = DL*Vliq
4162   C      TOTAL MASS OF RADIATOR MANIFOLD
4163          XMANmas = XMwall+XMbraze+XMhtpip+XMins+XMliqin
4164   C      WRITE (6,*) 'Vins,XMins,Vliq,XMliqin,XMANmas =',Vins,XMins,Vliq,
4165   C     &XMliqin,XMANmas
4166          IF (JNCON.EQ.0) Cgt=0.0
4167          IF (JNCON.EQ.0) Xtt=0.0
4168          RETURN
4169          END
WARNING - REAL VARIABLE (USUP) assigned a value, never used,  line 4077.
WARNING - REAL VARIABLE (UCON) assigned a value, never used,  line 4104.
WARNING - REAL VARIABLE (USUB) assigned a value, never used,  line 4128.
WARNING - REAL VARIABLE (ANSUP) assigned a value, never used,  line 4136.
```

```
C
C
C
C
      SUBROUTINE CLIQ (Wmen,HM,WM,DX,ETA,Hs,DPnet3,Ar,Gt,V,Dh,
     & Rel,Hl)
C** CALCULATES HEAT TRANSFER & PRESSURE DROP FOR PURE VAPOR
C** A TWO-PHASE FLUID (GAS-LIQUID) ** ADJUSTED FOR LIQUID METALS
      COMMON /CNFL/ DL, DV, VF, VG, HF, HG, HFG, SF, SG,
     &              SFG, Cl, Cv, TKl, TKv, Prl, Prv, Vl, Vv

C     WRITE (6,*) 'DATA FROM CLIQ'
C     WRITE (6,*) 'REVIEW CONTENTS OF COMMON'
C     WRITE (6,*) 'DL,DV,VF,VG,HF,HG,HFG,SF,SG,SFG,Cl,Cv,TKl,TKv,Prl,Prv
C    &,Vl,Vv =',DL,DV,VF,VG,HF,HG,HFG,SF,SG,SFG,Cl,Cv,TKl,TKv,Prl,Prv,Vl
C    &,Vv
      Gc = 32.1739
C** HEAT TRANSFER
C** FLOW CROSS-SECTIONAL AREA (sq ft)
      Ar  = HM * WM
      Dh = (4.0*Ar)/((2.0*HM)+(2.0*WM))
C**  Gt  - MASS FLUX (lbm/h sq ft)
C**  M   - FLOW RATE PER TUBE, (lbm/h)
      Gt  = Wmen / Ar
C     WRITE (6,*) 'Gc,Ar,Dh,Gt =',Gc,Ar,Dh,Gt

C** LIQUID VELOCITY, ft/s
      V   = Gt/( DL * 3600.0 )

C** CONDENSATE FILM REYNOLDS NUMBER
      Rel = Wmen*Dh/(Ar*VL)

C**  Hl  - SHEAR-CONTROLLED LIQUID FILM HEAT TRANSFER COEFFICIENT
      Hl  = (7.0 + 0.025*(Rel * Prl)**0.8 )* (TKl/Dh)
      Hs  = Hl

C**  PRESSURE DROP
C**  MOMENTUM PRESSURE DROP (psia)
C**  i = inlet,  e = exit
C     DPm = Gt**2.0/Gc*( ((1.0-Y)/Dle+Y/DVe) - ((1.0-Y)/Dli+Y/DVi) )

C** CALCULATE FRICTION FACTORS
      FFl = FF(Dh, ETA, Rel)

C**  LIQUID PRESSURE DROP (psia)
      DPl = FFl*(DX/Dh)*Gt**2.0**(1.0/(2.0*DL*Gc))
C     WRITE (6,*) 'V,Rel,Hl,Hs,DPl,FFl  =',V,Rel,Hl,Hs,DPl,FFl
      DPl = DPl/(144.0*3600.0**2.0)

C**  DPf FRICTION PRESSURE DROP (psia)
      DPf = DPl
      DPnet3 = DPf
```

```
4222  C     WRITE (6,*) 'DPl,DPf,DPnet3 =',DPl,DPf,DPnet3
4223        RETURN
4224        END
```

```
C
C
C
      SUBROUTINE COND (Wmen,Y,HM,WM,DX,ETA,Hs,DPnet2,Ar,Gt,V,Dh,
     & Cgt,Rel,Hl,Xtt,Rev)
      Gc=32.1739
C** CALCULATES HEAT TRANSFER & PRESSURE DROP FOR
C** A TWO-PHASE FLUID (GAS-LIQUID) ** ADJUSTED FOR LIQUID METALS
      COMMON /CNFL/  DL,  DV, VF, VG,  HF,  HG, HFG,  SF, SG,
     &               SFG, Cl, Cv, TKl, TKv, Prl, Prv, Vl, Vv

C     WRITE (6,*) 'INFO FROM COND'
C     WRITE (6,*) 'REVIEW CONTENTS OF COMMON'
C     WRITE (6,*) 'DL,DV,VF,VG,HF,HG,HFG,SF,SG,SFG,Cl,Cv,TKl,TKv,Prl,Prv
C    &,Vl,Vv =',DL,DV,VF,VG,HF,HG,HFG,SF,SG,SFG,Cl,Cv,TKl,TKv,Prl,Prv,Vl
C    &,Vv
C** HEAT TRANSFER
C** FLOW CROSS-SECTIONAL AREA (sq ft)
      Ar  = HM * WM
C     WRITE (6,*) 'Ar =',Ar
      Dh = (4.0*Ar)/((2.0*HM)+(2.0*WM))
C     WRITE (6,*) 'Dh =',Dh
C**  Gt  - MASS FLUX (lbm/h sq ft)
C**  M   - FLOW RATE PER TUBE(LIQUID PLUS VAPOR), lbm/h
      Gt  = Wmen / Ar
C     WRITE (6,*) 'Gt =',Gt

C** VAPOR VELOCITY, ft/s
C** Y   - LOCAL VAPOR WEIGHT FRACTION FACTOR
      V   = Y*Gt/( DV * 3600.0 )
C     WRITE (6,*) 'V =',V

C**  Cgt - TUBESIDE FLOW REGIME PARAMETER
C** IF Cgt < 0.3, SHEAR-CONTROLLED LIQUID FILM HEAT TRANSFER COEFFICIENT
      Cgt = (Dh*(Gc*(3600.0**2.0))*DV*(DL-DV)*((1-Y)/Y))**0.5/Gt
C     WRITE (6,*) 'Cgt =',Cgt

C** CONDENSATE FILM REYNOLDS NUMBER
      Rel = Wmen*(1.0-Y)*Dh/(Ar*VL)
C     WRITE (6,*) 'Rel =',Rel

C**  VISCOSITY CORRECTION FACTOR , (BULK VISCOSITY/WALL VISCOSITY)**0.14
C**  ASSUMED EQUAL TO 1
C**   VCF = 1.0

C**  Hl  - SHEAR-CONTROLLED LIQUID FILM HEAT TRANSFER COEFFICIENT
C**   Hl  = 0.022*(Rel)**0.8 * (Pr)**0.4 * (TKl/Dh) * VCF
      Hl  = (7.0 + 0.025*(Rel * Prl)**0.8 )* (TKl/Dh)
C     WRITE (6,*) 'Hl =',Hl

C**  Xtt - MARTINELLI PARAMETER, FORM FOR BOTH TURBULENT PHASES
      Xtt = ((1.0-Y)/Y)**0.9 * (DV/DL)**0.5 * (VL/VV)**0.1
```

```
C     WRITE (6,*) 'Xtt =',Xtt

C**  Csh - CORRELATION FUNCTION FOR SHEAR-CONTROLLED FLOW HT & DP
      Csh = 2.75 *(1.0 + 2.0/Xtt**0.5)* (1.0 - DV/DL)**1.5
C     WRITE (6,*) 'Csh =',Csh

C**  Ftp - SHEAR-CONTROLLED FLOW TWO PHASE HEAT TRANSFER FACTOR
      Ftp = (1.0 + Csh/Xtt + 1.0/Xtt**2.0)**0.5
C     WRITE (6,*) 'Ftp =',Ftp

C**  Hs  - SHEAR-CONTROLLED LIQUID FILM HEAT TRANSFER COEFFICIENT
      Hs = Ftp*Hl
C     WRITE (6,*) 'Hs =',Hs

C**  PRESSURE DROP
C**  MOMENTUM PRESSURE DROP (psia)
C**  i = inlet,  e = exit
C     DPm = Gt**2.0/Gc*( ((1.0-Y)/Dle+Y/DVe) - ((1.0-Y)/Dli+Y/DVi) )

C** VAPOR REYNOLDS NUMBER
      Rev = Wman*Y*Dh/(Ar*VV)
C     WRITE (6,*) 'Rev =',Rev

C** CALCULATE FRICTION FACTORS
      FFl = FF(Dh, ETA, Rel)
      FFv = FF(Dh, ETA, Rev)

C**  LIQUID PRESSURE DROP (psia)
      DPl = FFl*(DX/Dh)*Gt**2.0*(1.0-Y)**2.0*(1.0/(2.0*DL*Gc))
      DPl = DPl/(144.0*3600.0**2.0)

C**  VAPOR PRESSURE DROP (psia)
      DPv = FFv*(DX/Dh)*Gt**2.0*Y**2.0*(1.0/(2.0*DV*Gc))
      DPv = DPv/(144.0*3600.0**2.0)

C     WRITE (6,*) 'FFl,FFv,DPl,DPv =',FFl,FFv,DPl,DPv
C**  FLF  TWO PHASE FRICTION LOSS FACTORS
C**  DPf FRICTION PRESSURE DROP (psia)
      IF (Rel.GT.2000.0) THEN
      FLF = (1.0 + Csh/Xtt + 1.0/Xtt**2.0)**0.5
      DPf = FLF**2.0 * DPl
      ELSE
      FLF = (1.0 + Csh*Xtt + Xtt**2.0)**0.5
      DPf = FLF**2.0 * DPv
      ENDIF
      DPnet2 = DPf
      RETURN
      END
```

```
C
C
C
      SUBROUTINE CVAP (Wmen,NM,WM,DX,ETA, Hs, DPnet1,Ar,Gt,V,Dh,
     & Rev,Hl)
      Gc = 32.1739
C** CALCULATES VAPOR HEAT TRANSFER & PRESSURE DROP FOR
      COMMON /CNFL/  DL,  DV, VF, VG,  HF,  HG, HFG,  SF, SG,
     &               SFG, Cl, Cv, TKl, TKv, Prl, Prv, Vl, Vv

C     WRITE (6,*) 'DATA FROM CVAP'
C     WRITE (6,*) 'REVIEW CONTENTS OF COMMON'
C     WRITE (6,*) 'DL,DV,VF,VG,HF,HG,HFG,SF,SG,SFG,Cl,Cv,TKl,TKv,Prl,Prv
C    &,Vl,Vv =',DL,DV,VF,VG,HF,HG,HFG,SF,SG,SFG,Cl,Cv,TKl,TKv,Prl,Prv,Vl
C    &,Vv
C** HEAT TRANSFER
C** FLOW CROSS-SECTIONAL AREA (sq ft)
      Ar  = NM * WM
      Dh = (4.0*Ar)/((2.0*NM)+(2.0*WM))
C**  Gt  - MASS FLUX (lbm/h sq ft)
C**  M   - FLOW RATE PER TUBE (lbm/h)
      Gt  = Wmen / Ar

C** VAPOR VELOCITY, ft/s
      V   = Gt/( DV * 3600.0 )
C     WRITE (6,*) 'Ar,Dh,Gt,V =',Ar,Dh,Gt,V

C** VAPOR REYNOLDS NUMBER
      Rev = Wmen*Dh/(Ar*VV)

C**  Hl  - SHEAR-CONTROLLED VAPOR FILM HEAT TRANSFER COEFFICIENT
      Hl  = 0.022*(Rev)**0.8 * (Prv)**0.6 * (TKv/Dh)
      Ftp = 1.0
      Hs = Ftp*Hl
C     WRITE (6,*) 'Rev,Hl,Ftp,Hs =',Rev,Hl,Ftp,Hs
C**  PRESSURE DROP
C**  MOMENTUM PRESSURE DROP (psia)
C**  i = inlet,  e = exit
C     DPm = Gt**2.0/Gc*( ((1.0-Y)/Dle+Y/DVe) - ((1.0-Y)/Dli+Y/DVi) )

C** CALCULATE FRICTION FACTORS
      FFv = FF(Dh, ETA, Rev)

C**  VAPOR PRESSURE DROP (psia)
      DPv = FFv*(DX/Dh)*Gt**2.0*(1.0/(2.0*DV*Gc))
      DPv = DPv/(144.0*3600.0**2.0)
C     WRITE (6,*) 'FFv,DPv =',FFv,DPv
C**  DPf FRICTION PRESSURE DROP (psia)
      DPf = DPv
      DPnet1 = DPf
      RETURN
      END
```

```
C
C
C
      FUNCTION FF(Dh, ETA, RE)
C**  FF, FRICTION FACTOR
C**  ETA, SURFACE ROUGHNESS, ft
      FF = 0.25/(ALOG10(ETA/(3.7*Dh) + 5.74/RE**0.9))**2.0
      IF (RE.LE.2000.0) FF = 64.0/RE
      IF (RE.GT.2000.0 .AND. RE.LT.4000.0)
     &   FF = 0.032*(1.0 - (RE-2000.0)/2000.0) + FF*(RE-2000.0)/2000.0
      END
```

```
C
C
C
      SUBROUTINE KPRP(X,P,T, DL, DV, HF, HG, HFG, SF, SG, SFG, VF, VG)
C     WRITE (6,*) 'FROM KPRP, X,P,T =', X, P, T
C** REFERENCE: NAVAL RESEARCH LABORATORY (NRL REPORT 6233)
C** " HIGH-TEMPERATURE PROPERTIES OF POTASSIUM"
      DATA XMW, R, TR / 39.0983, 1.986, 460.0 /

C** SATURATION PRESSURE (psia),  page 14, equation 2
      IF(X.EQ.1) Pv= 10.0**(6.12758 - 8128.77/T - 0.53299*ALOG10(T))

C** LIQUID DENSITY (lbm/cu ft), page 18, equation 9
      DL  =  52.768 - 7.4975E-3*(T-TR) - 0.5255E-6*(T-TR)**2.0
     &                                 + 0.0498E-9*(T-TR)**3.0

C** LIQUID SPECIFIC VOLUME (cu ft/lbm)
      VF = 1.0/DL

C**  CONSTANTS & DERIVATIVES OF VIRIAL EQUATION, page 29, equation 29
      B  =  -T*10.0**(-3.8787 + 4890.7/T)
      DB =   B/T*(1.0 - 4890.7*ALOG(10)/T)
      C  =   10.0**(0.5873  + 6385.7/T)
      DC = -6385.7*ALOG(10) * C/T**2.0
      D  = -1.0*10**(1.4595 + 7863.8/T)
      DD = -7863.8*ALOG(10) * D/T**2.0

C** SOLVE FOR VOLUME VAPOR STATE BY VIRIAL EQUATION, 0.7302=GAS CONSTANT
      V1 = 0.7302*T/Pv
      DO 10 I=1,100
      FUNC   = Pv*V1/(0.7302*T) - (1.0 + B/V1 + C/V1**2 + D/V1**3)
      SLOPE  = Pv/(0.7302*T) + (B/V1**2 + 2.0*C/V1**3 + 3.0*D/V1**4)
      V2 = V1 - FUNC/SLOPE
      IF (ABS(FUNC) .LT. 1.0E-6) GO TO 20
      V1 = V2
   10 CONTINUE
   20 VG = V2

C** ENTHALPY OF VAPORIZATION (Btu/lbm)
      HFG  = (R/0.7302)*Pv*(8128.77*ALOG(10.0)/T - 0.53299)*(VG/XMW-VF)

C** REFERENCE ENTHALPY (Btu/lbm), page 23, equation 10
      HG0 = 998.95 + 0.127*T + 24836.0*EXP(-39375.0/T)
      DE  = T/VG*((DB-B/T)+1.0/VG*(DC/2.0-C/T)+1.0/VG**2.0*(DD/3.0-D/T))

C** ENTHALPY VAPOR STATE (Btu/lbm), page 32, equation 26
      HG  = HG0 - (R*T/XMW)*DE

C** ENTHALPY LIQUID STATE (Btu/lbm), page 33
      HF  = HG - HFG

C** ENTROPY OF VAPORIZATION (Btu/lbm R)
      SFG = HFG/T
```

```
 4441
 4442  C** REFERENCE ENTROPY STATE (Btu/lbm R), page 23, equation 11
 4443        SG0 = 0.18075 + 0.127*ALOG(T) + 0.7617*EXP(-31126.0/T)
 4444        DS  = T/VG*((DB+B/T) + 1.0/(2.0*VG)*(DC+C/T) +
 4445       &      1.0/(3.0*VG**2.0)*(DD+D/T)) - ALOG(Pv*VG/(0.7302*T))
 4446
 4447  C** ENTROPY VAPOR STATE (Btu/lbm R), page 32, equation 27
 4448        SG = SG0 - (R/XMW)*(ALOG(Pv) + DS)
 4449
 4450  C** ENTROPY LIQUID STATE (Btu/lbm R), page 33
 4451        SF = SG - SFG
 4452
 4453  C** VAPOR SPECIFIC VOLUME (cu ft/lbm)
 4454        VG = VG/XMW
 4455
 4456  C** VAPOR DENSITY (lbm/cu ft)
 4457        DV = 1.0/VG
 4458
 4459        RETURN
 4460        END
WARNING - REAL VARIABLE (P), a dummy argument, is never used,  line 4391.
```

```
C
C
C
      SUBROUTINE KTRN(X,P,T, Cl, Cv, TKl, TKv, Prl, Prv, VL, Vv)
C** " TRANSPORT PROPERTIES OF POTASSIUM"

C** LIQUID HEAT CAPACITY (Btu/lbm)
      Cl = 0.22713 - 64.848E-6*T + 23.178E-9*T**2.0

C** LIQUID VISCOSITY (lbm/ft-h)
      VL  = EXP(1353.9/T - 1.9206)

C** LIQUID THERMAL CONDUCTIVITY (Btu/h-ft-R)
      TKl  = 32.2036 - 7.6789E-3*T

C** LIQUID PRANDTL NUMBER
      Prl = CL*VL/TKl

C** VAPOR CAPACITY (Btu/lbm)
      CALL KPRP(X,P,(T-0.01), DL, DV, HF, H1, HFG, SF, SG, SFG, VF, VG)
      CALL KPRP(X,P,(T+0.01), DL, DV, HF, H2, HFG, SF, SG, SFG, VF, VG)
      Cv  = (H2-H1)/0.02

C** VAPOR VISCOSITY (lbm/ft-h)
      Vv  = 1.0282E-2 + 2.5649E-5*T - 3.125E-9*T**2.0

C** VAPOR THERMAL CONDUCTIVITY (Btu/h-ft-R)
      TKv  = 1.8786E-3 + 4.3527E-6*T - 5.2198E-10*T**2.0

C** VAPOR PRANDTL NUMBER
      Prv = Cv*Vv/TKv

      RETURN
      END
```

NASA
National Aeronautics and Space Administration

Report Documentation Page

1. Report No. NASA CR-191132	2. Government Accession No.	3. Recipient's Catalog No.
4. Title and Subtitle: Heat Pipe Cooled Heat Rejection Subsystem Modeling for Nuclear Electric Propulsion (Task Order No. 18)		5. Report Date: December 1993
		6. Performing Organization Code: Rocketdyne Division Rockwell International
7. Author(s): Michael P. Moriarty		8. Performing Organization Report No.
		10. Work Unit No.
9. Performing Organization Name and Address: Rocketdyne Division, Rockwell International, 6633 Canoga Avenue, Canoga Park, California 91303		11. Contract or Grant No. NAS3-25808
12. Sponsoring Agency Name and Address: National Aeronautics and Space Administration, Lewis Research Center, 21000 Brookpark Road, Cleveland, Ohio 44135		13. Type of Report and Period Covered: Contractor Report Final
		14. Sponsoring Agency Code
15. Supplementary Notes		

16. Abstract

NASA LeRC is currently developing a FORTRAN based computer model of a complete nuclear electric propulsion (NEP) vehicle that can be used for piloted and cargo missions to the Moon or Mars. Proposed designs feature either a Brayton or a K-Rankine power conversion cycle to drive a turbine coupled with rotary alternators Both ion and MPD thrusters will be considered in the model. In support of the NEP model, Rocketdyne is developing power conversion, heat rejection, and power management and distribution (PMAD) subroutines. The subroutines will be incorporated into the NEP vehicle model which will be written by NASA LeRC. The purpose of this report is to document the heat pipe cooled heat rejection subsystem model and its supporting subroutines.

The heat pipe cooled heat rejection subsystem model is designed to provide estimates of the mass and performance of the equipment used to reject heat from Brayton and Rankine cycle power conversion systems. The subroutine models the ductwork and heat pipe cooled manifold for a gas cooled Brayton; the heat sink heat exchanger, liquid loop piping, expansion compensator, pump and manifold for a liquid loop cooled Brayton; and a shear flow condenser for a K-Rankine system. In each case, the final heat rejection is made by way of a heat pipe radiator. The radiator is sized to reject the amount of heat necessary.

17. Key Words (Suggested by Author(s)): Nuclear Electric Propulsion, Heat Rejection, Subroutines		18. Distribution Statement: Unclassified-Unlimited Subject Category 44	
19. Security Classif. (of this report): Unclassified	20. Security Classif. (of this page): Unclassified	21. No of pages	22. Price*

NM 1626 OCT 86

*For sale by the National Technical Information Service, Springfield, Virginia 22161