NASA Technical Memorandum 4586

NASA-TM-4586 19950016388

Weight Minimization of Structural Components for Launch in Space Shuttle

Surya N. Patnaik, Atef S. Gendy, Dale A. Hopkins, and Laszlo Berke

FOR REFERENCE
NOT TO BE TAKEN FROM THIS ROOM

November 1994

LIBRARY COPY
MAR 1 0 1995
LANGLEY RESEARCH CENTER
LIBRARY NASA
HAMPTON, VIRGINIA

National Aeronautics and
Space Administration

NASA Technical Library
3 1176 01418 7653

NASA Technical Memorandum 4586

Weight Minimization of Structural Components for Launch in Space Shuttle

Surya N. Patnaik
Ohio Aerospace Institute
Brook Park, Ohio

Atef S. Gendy
University of Akron
Akron, Ohio

Dale A. Hopkins and Laszlo Berke
Lewis Research Center
Cleveland, Ohio

National Aeronautics and
Space Administration
Office of Management
Scientific and Technical
Information Program
1994

Weight Minimization of Structural Components for Launch in Space Shuttle

Surya N. Patnaik
Ohio Aerospace Institute
Brook Park, Ohio 44142

Atef S. Gendy*
University of Akron
Akron, Ohio 44325

Dale A. Hopkins and Laszlo Berke
National Aeronautics and Space Administration
Lewis Research Center
Cleveland, Ohio 44135

Summary

Minimizing the weight of structural components of the Space Station launched onto orbit in a space shuttle can save cost, reduce the number of space shuttle missions, and facilitate on-orbit fabrication. Traditional manual design of such components, although feasible, cannot represent a minimum weight condition. At NASA Lewis Research Center, a design capability called CometBoards (Comparative Evaluation Test Bed of Optimization and Analysis Routines for the Design of Structures) has been developed especially for the design optimization of such flight components. Two components of the Space Station—a spacer structure and a support system—illustrate the capability of CometBoards. These components are designed for loads and behavior constraints that arise from a variety of flight accelerations and maneuvers. The optimization process using CometBoards reduced the weights of the components by one third from those obtained with traditional manual design. This paper presents a brief overview of the design code CometBoards; and a description of the Space Station components, their design environments, behavior limitations, and attributes of their optimum designs.

Introduction

Space Station components, designed with fully utilized design concepts, could become heavy, which is contrary to the minimum weight requirements for such flight hardware. Achieving minimum weight design for flight components is important because it can directly reduce launch cost, reduce the number of space shuttle missions, and facilitate fabrication of the Space Station on a low-earth orbit. Fortunately, minimum weight design of such hardware is amenable to design optimization techniques, which have matured over the past three decades. At NASA Lewis Research Center, a structural design optimization program, called CometBoards (Comparative Evaluation Test Bed of Optimization and Analysis Routines for the Design of Structures), is being developed specifically for design optimization of the Space Station components. The CometBoards code can be used to optimize complex flight components under thermomechanical loads for typical behavior constraints consisting of stresses, displacements, buckling, crippling, and frequencies. Salient features of the CometBoards design code include multiple nonlinear optimization routines, several analysis tools, design variable formulation, a constraints grouping scheme, component synthesis concepts, a substructure optimization technique, etc. The multiple optimizers and analyzers in CometBoards provide considerable flexibility in formulating a design optimization as a nonlinear mathematical programming problem and then in solving it by specifying the use of one of the optimization techniques and one of the structural analysis tools.

Components of the Space Station are planned to be assembled and launched together to advantageously utilize a major portion of the cargo bay of a space shuttle, which is approximately 15 ft in radius by 60 ft in length. CometBoards can generate optimum designs for such coupled components by using the component synthesis and substructuring technique available in the code. This capability to design flight components is illustrated by considering a spacer structure and a support system as examples. Optimum designs for both components were obtained under multiple pseudo-static loads that arise from launch accelerations and space shuttle maneuvers. Behavior constraints (e.g., stresses, displacements, buckling, crippling, frequencies) that conform to specifications given in the space shuttle design manuals were imposed. The optimum designs generated with CometBoards were found to be about one third lighter than those obtained with the traditional manual design. Even though the CometBoards code has been developed for minimum weight design of Space Station components, it can also be used to design other ground-based or automotive structures.

This paper presents an overview of the design code CometBoards, a brief review of optimization literature, a description of Space Station components and their design optimization, attributes of the optimum designs, and conclusions.

*NASA Resident Research Associate at Lewis Research Center

Design Code CometBoards

The CometBoards design code has a modular organization as depicted in figure 1. The central processor of the code (shown as "Control via command level interface" in fig. 1), links different modules to formulate an optimization problem from the information specified in the data files. The code then solves the optimization problem with a user-specified analysis tool and a user-specified optimization technique. The substructuring optimization technique that is available in CometBoards can be used for design optimization of large structural systems either in a sequential or in a parallel computational mode on a Cray YMP computer.

The "Optimizers" module of CometBoards (fig. 1) includes several design algorithms: fully utilized design (FUD) (ref. 1), optimality criteria techniques (OC) (ref. 2), the methods of feasible directions (FD) (ref. 3), the sequence of linear programming (SLP) (ref. 4), the quadratic programming method in the International Mathematical and Statistical Library (IMSL) (ref. 5), the sequence of quadratic programming (SQP) (ref. 6), and the sequence of unconstrained minimization technique (SUMT) (ref. 7). These algorithms are well known in the literature (e.g., ref. 8) and are not elaborated on in this paper.

The "Analyzers" module of CometBoards includes (a) LE_HOST, a finite element analyzer (ref. 9); (b) ANALYZE (ref. 10), a finite element stiffness code developed at Wright Patterson Air Force Base; (c) the integrated force method (IFM) (ref. 11); (d) the simplified force method; and (e) a closed-form IFM solution that is used to check analyzers (b) to (d).

The "Data files" module reads finite element analysis input in the "Analysis data" file; design variables, their groupings, constraint specifications, limitations, linkages, and such, in the "Design data" file; and data specific to optimization algorithms, such as convergence tolerance, stop criteria, iteration limits, etc., in the "Optimizer data" file.

The distinct features of the design capability of CometBoards are: (1) multiple optimization algorithms; (2) multiple finite element analysis tools (with a variable-thickness isoparametric shell element and nonprismatic beam element); (3) design variables grouping, component synthesis using active and passive design variable strategy, substructuring optimization technique, etc.; (4) behavior constraints including strength, displacement, frequency, buckling, and their grouping scheme; and (5) parallel computation on a Cray YMP computer. Three features of CometBoards, design variable formulation, behavior constraints grouping scheme, and substructuring optimization technique, are briefly described in this paper. Further details of the CometBoards code can be found in its user manual (ref. 12).

Design Variable Formulation

Design variable linking strategy along with a component synthesis concept form the design variable formulation capability of CometBoards. Such formulation is illustrated by considering a two-node, nonprismatic beam element (BE_98) and a four-node, variable thickness, quadrilateral shell element (SH_75) which are both available in CometBoards. The beam element can have a maximum of four design variables, consisting of a depth and a width at each of its two nodes (i.e., d_1, b_1, d_2, and b_2). The quadrilateral shell element can have a maximum of four design variables, consisting of the thickness at each of its four nodes (i.e., t_1, t_2, t_3, and t_4). A finite element model with many beam and shell elements can give rise to a large number of design variables that for practical applications need not be considered as independent variables. Use of linking

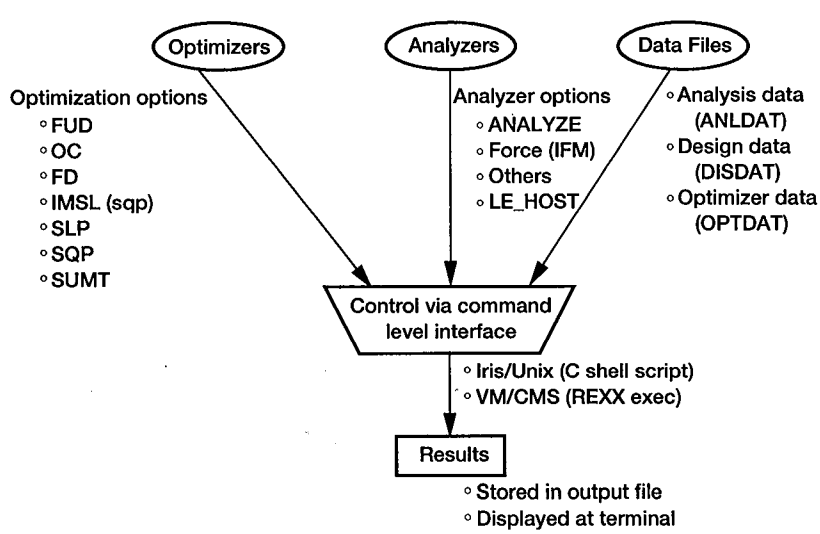

Figure 1.—Flow chart of CometBoards code.

strategy and the concept of active and passive variables can reduce the large number of nodal design variables. The linking strategy is initiated by dividing the given structural model into several segments. All the nodes within a segment are linked to an independent design variable through assigned weighted design parameters. The number of independent design variables can be further reduced by specifying that a variable be either active or passive. The values of the passive variables are kept at their initial design level while the active variables are updated during optimization. The active/passive classification not only reduces the number of design variables, but it also facilitates component synthesis, that is, generation of an optimum design of a small component of a huge structure, by specifying the variables of the component being designed to be active, while declaring all other variables in the structure to be passive. With this technique, the entire structure is analyzed, but only the specific component is designed. Formulation of design variables is illustrated with the example of the structural component shown in figure 2. The finite element model of this component is discretized by 76 shell elements (SH_75) and 11 beam elements (BE_98). Beam and shell elements are shown separately for clarity in figure 2; however in an actual structure such elements can be superimposed. If the nodal parameters of the simple component shown in figure 2 are considered to be independent, then the number of design variables can become 348, that is, 304 shell thicknesses (4 for each shell element) and 44 depths and widths of beams (4 for each beam element). Such a large number of design variables (348) can exhaust the capability of CometBoards. Furthermore, it may not be practical, from a manufacturing perspective, to build a component, such as the one shown in the example in figure 2, from 87 different independent pieces with varying thicknesses, depths, and widths. To reduce the number of design variables, the component is divided into three segments; two of which are modeled with shell elements, and the other with beam elements (fig. 2). All nodes within a plate segment are assigned to a single grouped design variable, that is, the thickness of the plate in the first and third segments; and all the nodes within a beam segment are assigned to two design variables, that is, the beam depth and beam width in the second segment. The depth of the beam elements (fig. 2, segment II) is specified to be an active variable whereas the width is specified to be a passive design variable. The plate variables in segments I and III are considered to be active. The component for which the variables are specified as active can be optimized without changing the variables declared passive (see the section of this paper entitled "Design Optimization of Space Station Components," for an application of active and passive variables).

Behavior Constraints Grouping Scheme

The number of behavior constraints can proliferate when the finite element technique is utilized as an analysis tool in optimization since several thousands of degrees of freedom are required to achieve an acceptable level of convergence in a model. For example, if the stress constraints at all the nodes were considered, the structure in figure 2 would have 304 stress constraints for shell elements (one at each shell node) and 22 such constraints for beam elements (one at each beam node). The constraint population can be reduced without any detrimental effect by following a grouping scheme, which is illustrated in figure 2. In this figure, the structure is divided into several design patches (shown in different colors for plate segments), each of which contains a group of finite element nodes. Strength constraints are calculated for all the nodes within a patch on the basis of one of the failure criteria that is available in CometBoards (e.g., Von Mises stress, strain energy, distortion energy, etc.). These constraints are graded from the most active (possibly infeasible) to the least active, and a few of the critical constraints are selected each time the structure is analyzed during the optimization. Constraints for elemental buckling and elemental crippling can be similarly grouped. The code user, however, has the option of skipping design variable formulation and constraints grouping, thereby treating all such variables and constraints as independent parameters.

Substructuring Optimization Technique

Design optimization of large structural systems with many design variables and a large number of behavior constraints can be prone to convergence difficulties due to problem complexity. Optimization of such large structural systems can be attempted through a substructuring technique. In this technique, the given structure is divided into several substructures (subproblems). Each substructure can have few independent design variables and a small number of behavior constraints. The optimal design of the original large structure can be obtained iteratively through repeated optimization of each of the modest substructures until convergence occurs. The merit of the substructuring strategy is that through it the optimum design of a large structural system can be more successfully accomplished; this may otherwise be difficult to obtain if the entire structure is treated as a single unit and is optimized in a single step.

The substructuring optimization technique available in CometBoards is illustrated considering the model shown in figure 3. In this model, the structure is divided into four substructures, which are termed substructure (1), substructure (2), etc. Each substructure should be composed of two or more segments, and at least one independent design variable should be common between two substructures in order to provide coupling between subproblems. Coupling between substructures assists the convergence process. Both the design variable formulation and the constraints grouping scheme can be applied at the substructure level. In substructuring optimization, behavior constraints should be separated into two sets, that is, local and global sets. The local set accounts for the stress,

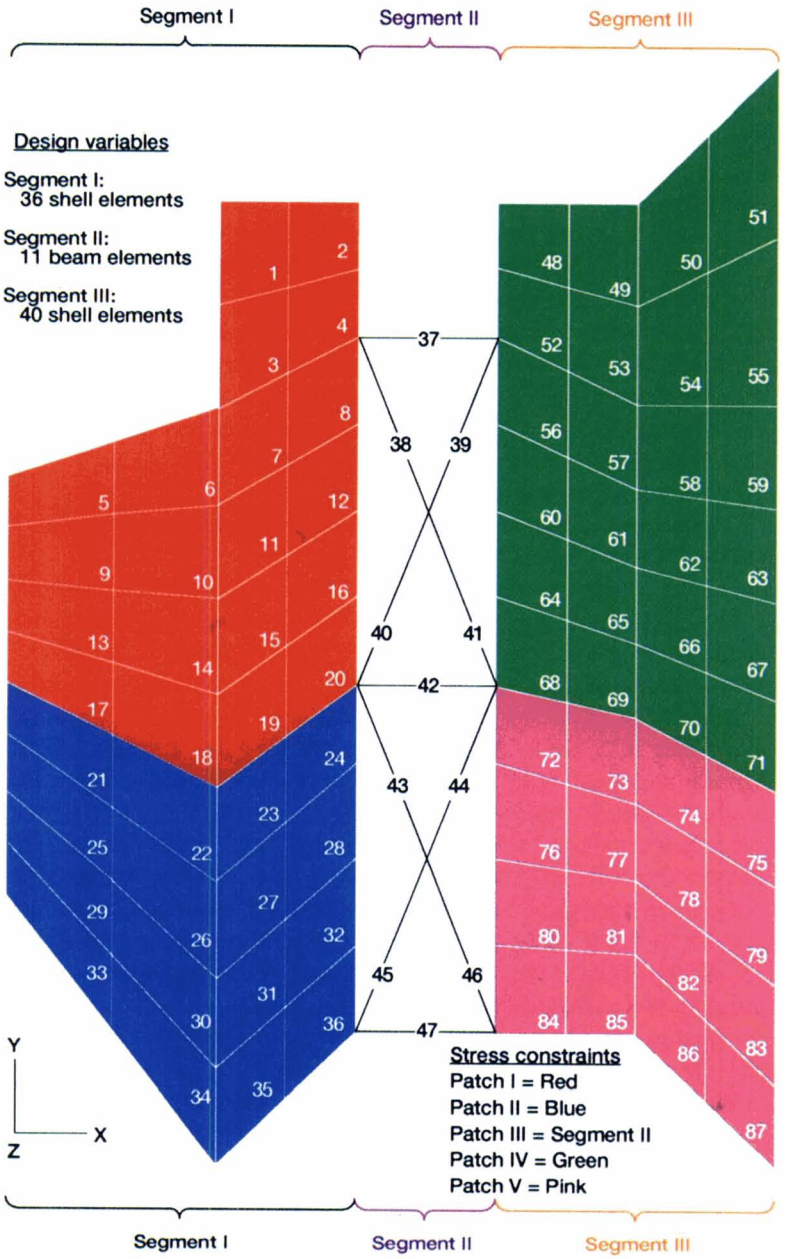

Figure 2.—Design variable formulation and constraints grouping scheme.

buckling, and crippling constraints associated with design variables within a substructure. For example, for substructure (1) shown in figure 3, the local set should contain the stress, buckling, and crippling constraints within segments I and II. Similarly, the local sets for the second, third, and fourth substructures should include the stress, buckling, and crippling constraints in segments II and III, segments III and IV, and segments IV and I, respectively. The global set includes the displacement and frequency constraints that, being global in nature, should be common for all substructures. Each substructure is optimized for its independent design variables for the associated local and global constraints. The iterative optimization process continues until convergence occurs (see the subsection of this paper entitled "Optimization Using Substructuring Technique" for application to Space Station components).

Design as Nonlinear Mathematical Programming Problem

Utilizing design variable formulation, constraints grouping scheme, and substructuring technique, the optimization of a Space Station component can be cast as a standard nonlinear programming problem:

Find the n design variables $\underset{\sim}{x}$ within prescribed upper and lower bounds, $\left(x_i^L \le x_i \le x_i^U,\ i = 1,2,\ldots,n\right)$, to minimize the weight function $W(\underset{\sim}{x})$ under a set of inequality constraints.

where $\underset{\sim}{x}$ represents the independent active design variables for all groups of shells and beams.

The weight of a Space Station component, which is considered as the merit function, has a rather complex nonlinear form because of the nature of the design variable formulation. The weight W in symbolic form, for a structure assembled from shell and beam elements, can be expressed as (the first term represents shell elements and the second term represents beam elements)

$$W = \sum_{s=1}^{n_s} \rho_s \left(\sum_{k=1}^{4} A_k t_k \right)_s + \sum_{b=1}^{n_b} \rho_b L_b \left(\sum_{k=1}^{2} c_k d_k b_k \right)_b \tag{1}$$

where ρ_s and ρ_b are the weight densities of the shell and beam elements, respectively; t_k and A_k represent, respectively, the thickness and associated equivalent area for the kth node of the shell element; L_b is the length of a beam element; d_k and b_k are, respectively, the depth and width of the beam element for node k; c_k represents a coefficient that takes into account the nonprismatic nature of the beam; and n_s and n_b are, respectively, the number of shell and beam elements. The merit function given by equation (1) can be rewritten in terms of independent active design variables $\underset{\sim}{x}$ using the design variable formulation

$$W(\underset{\sim}{x}) = \sum_{i=1}^{n} f_i\left\{t_s(x_i), d_b(x_i), b_b(x_i), x_i\right\} \tag{2}$$

where f_i is an implicit nonlinear function of the geometry parameters of the shell and beam element groups. In the CometBoards code, the weight and its gradients are generated in closed forms through repeated application of the chain rules of differentiation.

The behavior constraints considered are nodal stresses, buckling of beam-columns, skin crippling, nodal displacements, and frequencies for specified modes. These constraints are generated through the analysis tool LE_HOST and are specified in symbolic forms as

Stress constraint:

$$g_{\sigma j} = \left| \frac{\sigma_j^k}{\sigma_{jo}^k} \right| - 1 \le 0 \tag{3}$$

Buckling constraint:

$$g_{B_j} = \left| F_{B_j} \right| - 1 \le 0 \tag{4}$$

Crippling constraint:

$$g_{c_j} = \left| F_{c_j} \right| - 1 \le 0 \tag{5}$$

Displacement constraint:

$$g_{uj} = \left| \frac{u_j}{u_{jo}} \right| - 1 \le 0 \tag{6}$$

Frequency constraint:

$$g_{fm} = \left(\frac{f_{mo}}{f_m} \right)^2 - 1 \le 0 \tag{7}$$

where σ_j^k is the design stress obtained from one of the failure criteria for the jth node in the kth patch; σ_{jo}^k, the permissible stress for the jth node; F_{Bj}, the buckling function for the jth node of beam-column elements in the kth patch, calculated from interactive equations that consider both forces and moments simultaneously (refs. 13 and 14); F_{Cj}, the crippling function for the jth node of the elements in the kth patch with tube cross section, based on the crippling of cylindrical

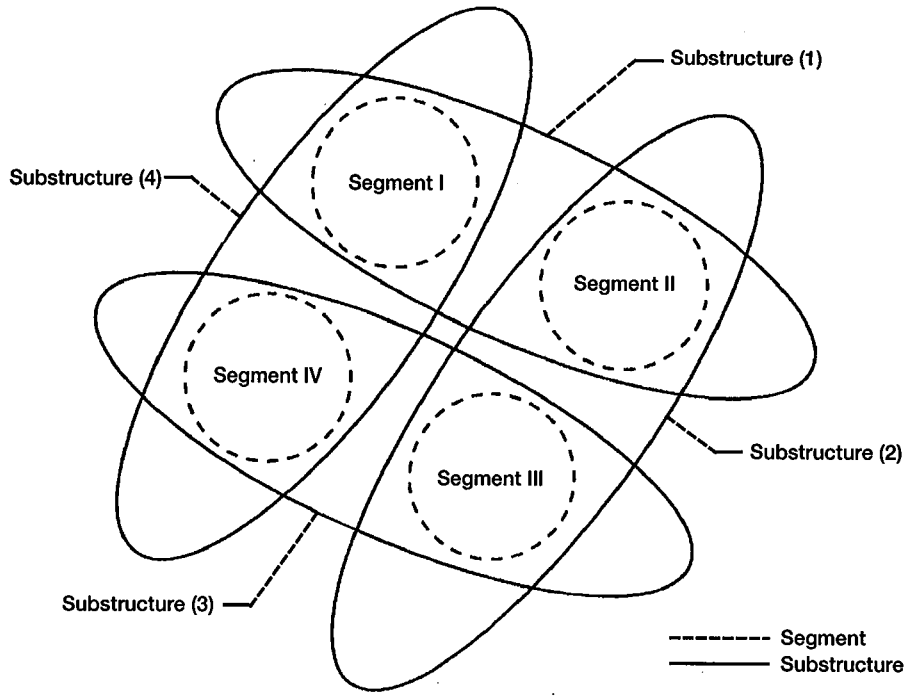

Figure 3.—Substructuring technique in CometBoards.

shells under combined loadings (ref. 15); u_j, the jth nodal displacement component; u_{jo}, the displacement limitation for the jth nodal displacement component; f_m, the mth frequency; and f_{mo}, the limitation of the frequency.

As mentioned earlier, the central processor of CometBoards links the Optimizer, Analyzer, and Data Files modules, formulates the design as an optimization problem, then solves the problem with a user-specified analyzer, such as the analysis tool LE_HOST, and a user-specified optimizer, such as SUMT, and stores the solution in an output device.

Optimization Literature Review

A brief review of optimization literature (refs. 16 to 43) in a tabular format is provided in the Appendix. The first column of the Appendix provides a problem description, such as, "Trusses, minimum weight," which stands for the minimum weight design of a truss-type structure. The analysis tool used is given in the second column. The analytical solution typically represents a closed-form solution whose applications, quite often, can have limited scope beyond the problem treated in the paper. The third column provides the optimization algorithms that have been used to investigate the problem. The "Design Variables" column notes the types of design variables that have been used, for example, bar areas for trusses, thickness for membrane, etc. In this column, the term "linking" indicates that several design variables were linked. Behavior constraints are provided in the fifth column. The last column lists the reference number for the bibliographic source information.

Several observations can be made from this review. Trusses and membranes have dominated in optimization literature, and, to some extent, in design software packages. Stress constraints are treated more frequently whereas buckling constraints are most often neglected. Finite elements is the popular analysis tool. Sequence of unconstrained minimization technique (SUMT), the method of feasible directions (FD), sequence of quadratic programming (SQP), and their derivatives, are the popular optimization algorithms, in addition to the fully stressed design (FSD) and the optimality criteria methods (OC). Use of linking strategy (wherein several design variables are grouped together) to reduce the number of design variables (which is important from a practical consideration), does not appear to be widespread. Optimization of plates and shell-type structures (in which membrane and flexural effects are coupled) for stress, displacement, and frequency constraints has not drawn serious attention. Stiffened cylindrical and conical shells have been investigated most frequently but, closed-form, smeared solution has been used quite often for analysis. Optimization with aerodynamic instability constraints (divergence and flutter) is quite popular in the aircraft industry. Such

structural optimization, however, uses a simple membrane, shear panel, and truss elements. The design variables considered are thicknesses of membrane and shear panel elements and the area of truss elements. In such design, the strategy of linking the design variables is employed. The literature review given in the Appendix is representative but not comprehensive because many publications could not be included.

CometBoards design capabilities includes: (1) multiple optimization algorithms; (2) multiple finite element analysis tools; (3) design variables formulation; (4) behavior constraints grouping; and (5) substructure strategies, in sequential as well as parallel computational modes on a Cray YMP multiprocessor computer.

Brief Description of Space Station Components

A configuration of the Space Station, which covers an area of about 2 acres, is depicted in figure 4. The main structure of the Station can be considered as a long, trussed beam with several cantilevered appendages, supporting photovoltaic (PV) power modules, thermal control radiators, microgravity laboratories, habilitation modules, and such. On orbit, the Station will be powered by PV modules located on its starboard and port sides. The starboard PV power module consists of two solar array blankets positioned 590 in. apart. Two spacer structures, called the short spacer structure (SSS) and the long spacer structure (LSS), maintain the distance between the PV assemblies, as shown in figure 5. These spacer structures behave as space frames because they are subjected to a considerable number of in-span loads resulting from shuttle maneuvers and launch accelerations. The design code CometBoards has been used to obtain the optimum designs of the spacer structures and their support systems.

The SSS of the Space Station, which is depicted in figure 6, is located between the LSS and an integrated equipment assembly (IEA). The structure is 135.5 in. long (z-axis), 101.5 in. wide (y-axis), and 77.9 in. deep (x-axis). The frame members are made of 6061–T6 aluminum, and the support trunnions (ref. 44) are made of Inconel 718 (see table I for material properties). The SSS has 14 joints and 41 members. During its launch in the Space Transportation System, it will be supported in the cargo bay at three points (referred to as the three-point launch support). Two support points are provided by two longeron trunnions, and the other point by a keel trunnion. At the support, the trunnions can expand only along their axes. The other two translational degrees of freedom are prevented; that is, the displacements in both the x- and z-directions at the longeron trunnions and the displacements along the x- and y-axes at the keel trunnion are restrained.

The LSS of the Space Station will be launched in a shuttle mission while it is attached to the IEA, as shown in figure 7. During launch, the coupled structure, consisting of the IEA and the LSS, will be supported at six points, three located at the LSS side and the other three attached to the IEA. The six support points of the structure establish the load transfer mechanism from the LSS and IEA to the hard points in the cargo bay of the shuttle. Four of the support points (two located at the IEA and two at the LSS) are provided by longeron trunnions and the other two by keel trunnions (fig. 7). At the IEA trunnions, two degrees of freedom are prevented along the x- and the z-axes at the longeron trunnions; and one degree of freedom is prevented along the y-axis at the keel trunnion. At the LSS trunnions, only one translational degree of freedom is prevented at each trunnion; these are displacements along the z-axis at the longeron trunnions and displacements along the y-axis at the keel trunnion.

The longeron trunnion support at the LSS side (fig. 7) is an assemblage of plates and frame members that transfer the loads from the LSS cords to the cargo bay support points. A finite element model of the support plate system, which is generated from shell and frame elements, is depicted in figure 8. Both the plates and the frame members are made of 6061-T6 aluminum, which is identical to that used for the short spacer structure (table I).

Design Optimization of Space Station Components

The capability of CometBoards to design components of the Space Station is illustrated by considering the short spacer structure and the support system of the long spacer structure of the Space Station as examples. Both components of the Station were designed to accommodate pseudo-static loads resulting from launch accelerations, shuttle maneuvers, emergency landing, and such, under constraints specified for the design of space vehicle components in references 44 and 45. Several configurations of the SSS are solved using both SUMT as well as IMSL optimizers. Optimal designs are obtained by considering the entire structure as a single unit and also by following the substructuring synthesis technique.

Optimum Design of the Short Spacer Structure (SSS)

The SSS, depicted in figure 6 and described earlier, has been modeled as a space frame because of in-span inertia loads. Detailed finite element modeling and analysis of the spacer structure for the convergence of stresses, displacements, and frequency was carried out by using frame elements available in two independent analysis codes: (a) LE_HOST, the analyzer available in CometBoards; and, to check the results obtained, (b) the popular MSC/NASTRAN (ref. 46) analysis code. Both analyzers provided an acceptable level of convergence for a model with 307 nodes and 1 835 degrees of freedom

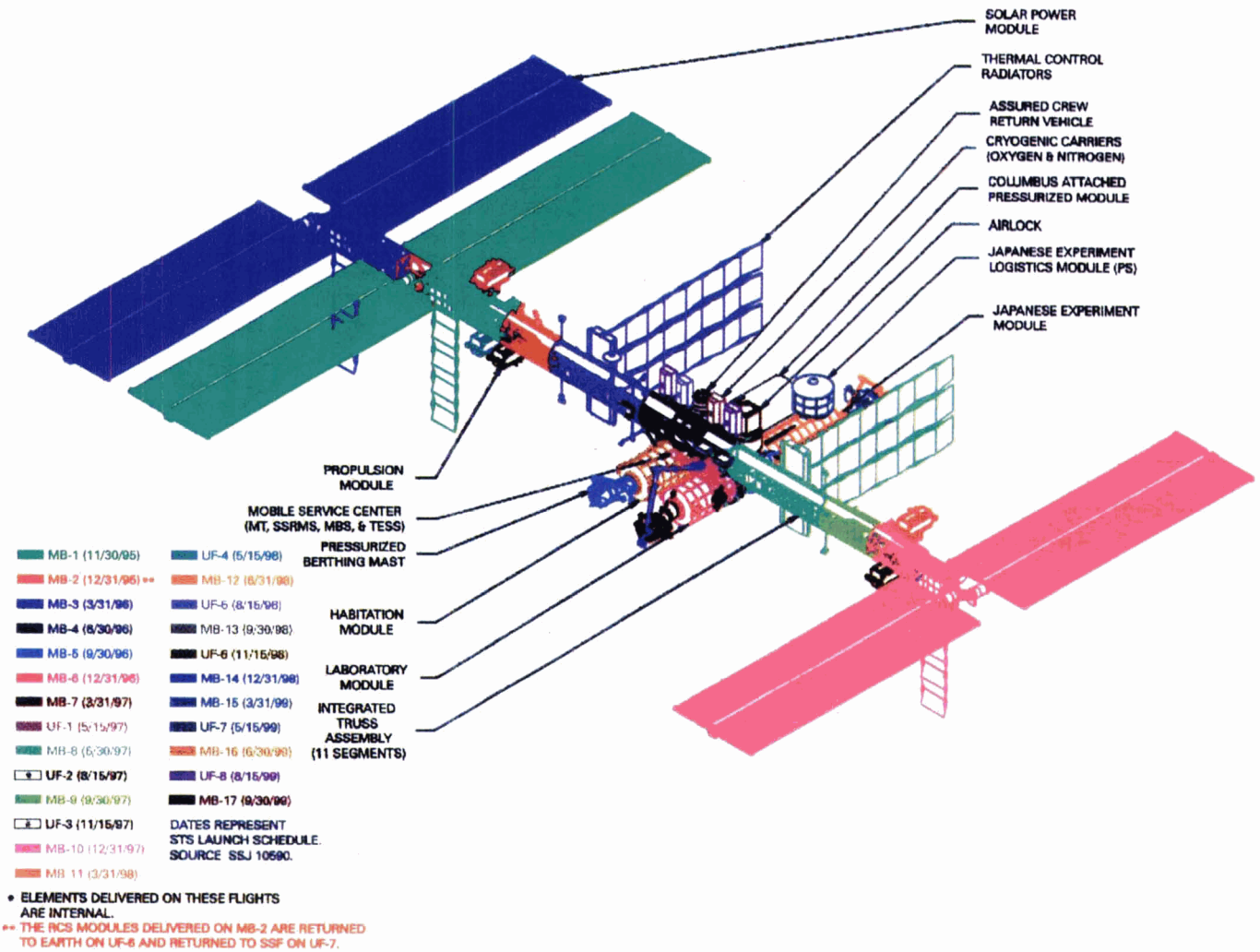

Figure 4.—Assembly sequence overview of the Space Station (figure courtesy of Boeing).

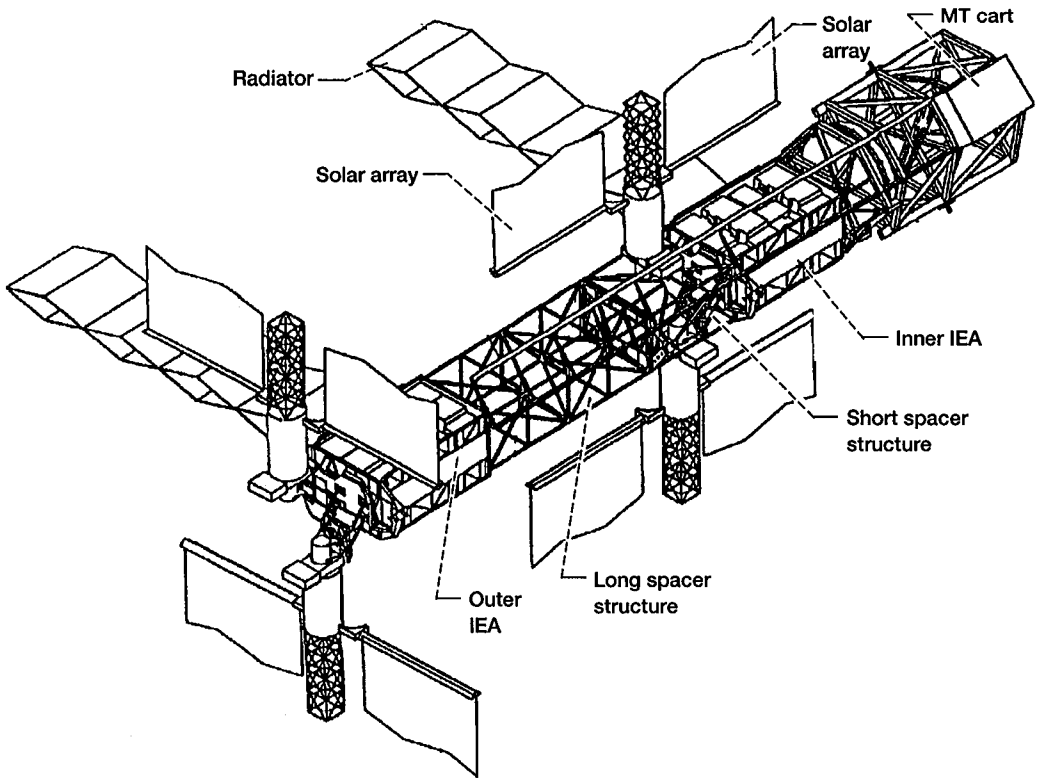

Figure 5.—Space Station configuration of alpha gimbal outboard.

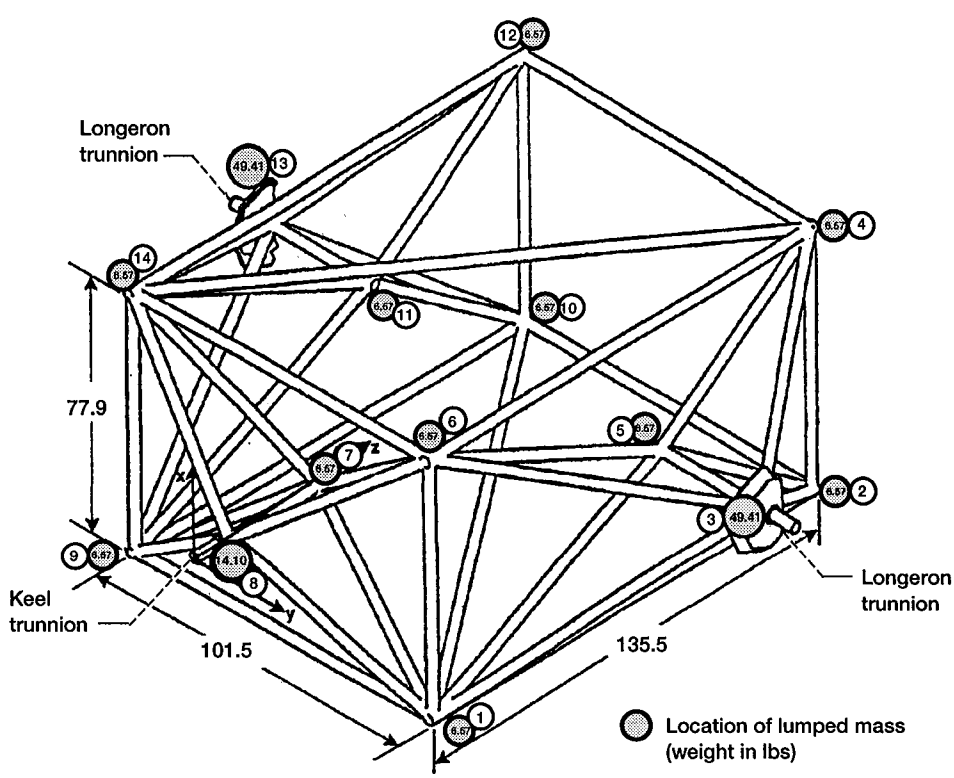

Figure 6.—Configuration of short spacer structure (dimensions given in inches).

TABLE I.—MATERIAL PROPERTIES OF SHORT SPACER STRUCTURE

Material	Young's modulus, psi	Poisson's ratio	Density, lb-sec^2/in.^{4}	Permissible stress, psi
Aluminum (members)	9.9×10^6	0.303	0.2539×10^{-3}	30 000
Inconel (trunnions)	29.4×10^6	.29	$.7694\times10^{-3}$	71 428

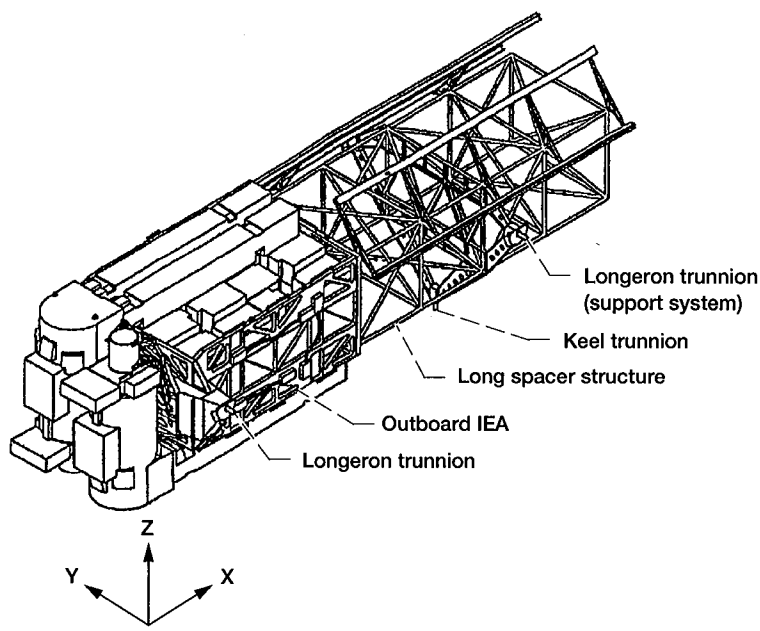

Figure 7.—Configuration of long spacer structure and integrated equipment assembly.

corresponding to 8 beam elements per frame member and 2 beam elements per trunnion of the spacer structure. This was the model considered for design optimization of the component.

The exact specifications required for the design optimization of the spacer structure, such as stress, displacement and frequency limitations, coupled load analysis, nodal masses due to equipment and fabrication harness, etc., are still in the process of development. Because of the absence of "exact" specifications, the following assumptions were made in generating a preliminary design: (1) Joint masses simulate the joint connection weight, mass of scuff plates, equipment mass, and such (ref. 44; location and magnitude of the masses are shown in fig. 6) in the dynamic analysis and animation. (2) A pseudo-static design load condition is generated for emergency landing acceleration with a safety factor of 1.5 (ref. 45). This critical load condition results from the shuttle accelerations of 6.75 g along the x-axis, 2.25 g along the y-axis, and 6.75 g along the z-axis, where g is the acceleration of gravity. This load condition, on the basis of internal strain energy and maximum nodal displacement considerations, encompasses the other launch load events. (3) Stresses in the frame members should not exceed the permissible stress of the aluminum material which is given in table I. (4) Displacement limitations at the exterior joints (i.e., joint numbers 1, 2, 3, 4, 6, 8, 9, 10, 12, 13, and 14 in fig. 6) should be less than 1.0 in. to avoid damage to the cargo bay. (5) Fundamental frequency should be more than 6 Hz.

A manual design for the SSS, obtained for these specifications, was used as the initial design to begin design optimization iterations. The manual design specified uniform tubular members (2.5-in. outer diameter and 0.2-in. thickness (ref. 47)) for all the frame members, 3.5-in.-diameter solid tubes for longeron trunnions, and 3.0-in.-diameter solid tubes for the keel trunnion. The weight of this manual design is 500 lb. The purpose of the design optimization was to explore the possibility of generating a more efficient and lighter design for the SSS of the Space Station than what was obtained manually.

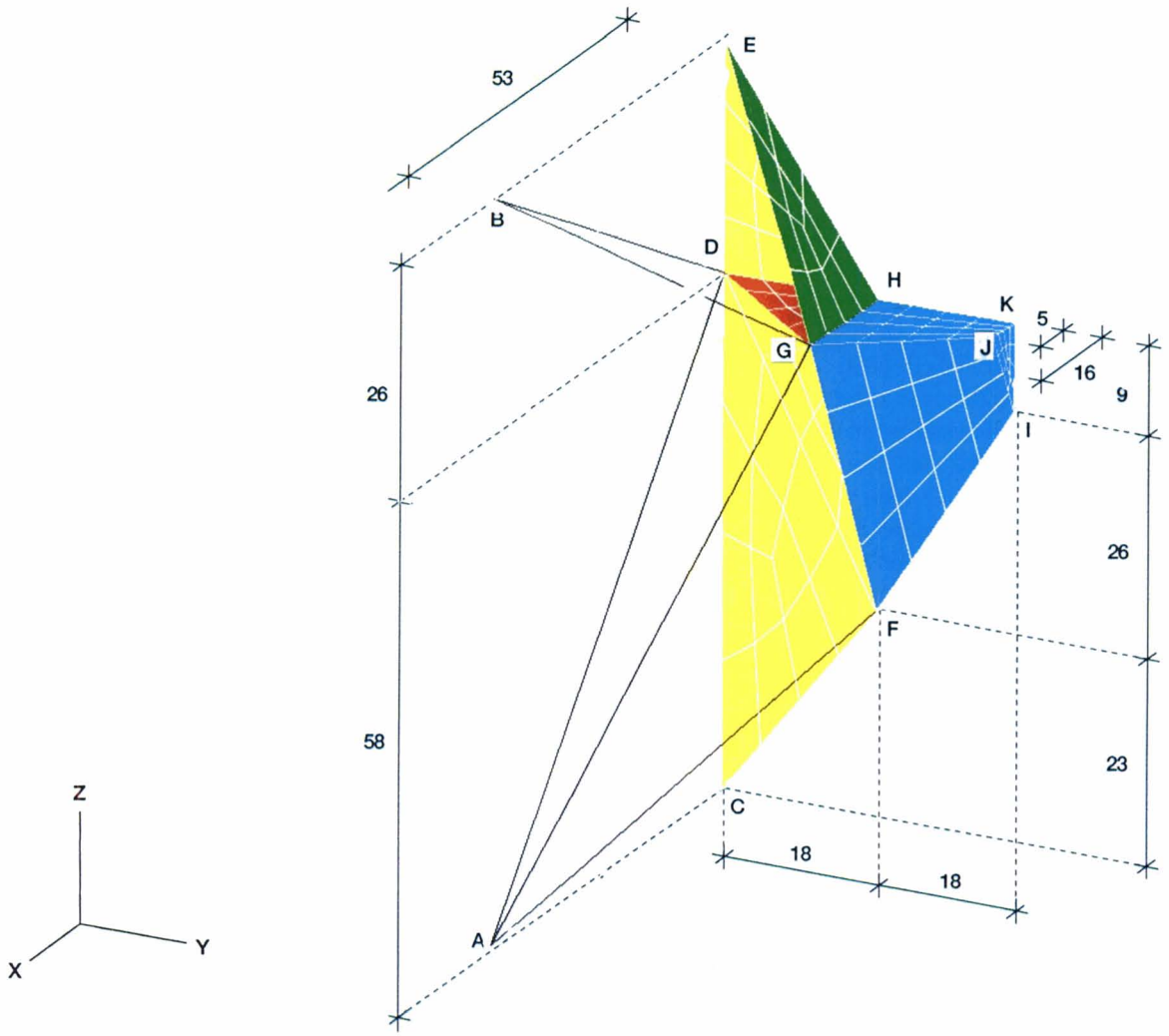

Figure 8.—Support system of long spacer structure (dimensions given in inches).

The design of the component was optimized in two principal steps. First, CometBoards was used to design the component. Then this optimum design was reanalyzed and its dynamic animation was examined with the PATRAN software (ref. 48). The experience gained from the animation was used to improve the design by modifying the configuration of the SSS, that is, by adding and/or deleting members and nodes. The modified configuration was optimized again with CometBoards. These two steps were repeated until a satisfactory design was obtained. A summary of all the designs obtained is given in table II, and a very brief description of the two steps followed to obtain the final design is given next.

Original configuration.—The first optimum design for the original configuration was obtained by linking all the structure members to a single variable through the design variable formulation. The diameter was considered an active design variable, whereas the thickness, which was considered a passive variable, was fixed at manual design level, which was 0.2 in. Through the constraint grouping strategy, the 301 stress constraints at the nodes of the frame model were reduced to 41 critical constraints. Identical constraint grouping strategies were extended for buckling and crippling constraints. Twenty-seven displacements were imposed at external node locations, that is, three displacement limitations at eight corner nodes and one constraint at each support point. The design considered for optimization had 41 stress, 41 buckling, 41 crippling, 27 displacement, and 1 frequency constraints. The initial design was specified as identical to that of the manual design; that is, diameter d = 2.5 in. and thickness t = 0.2 in. Both SUMT and IMSL optimizers converged to optimum weights of 398.22 lb and 398.11 lb, respectively, and had optimum cross-sectional diameters of 2.0282 in. and 2.0277 in. (table II). The optimum design was 20 percent lighter than the original design. Buckling in member (11-13) (fig. 6) was the only active constraint.

Modified configuration.—The dynamic animation of the optimum design of the spacer structure was carried out next. The animation revealed considerable flexibility in member (1-10), which was due to inadequate bracing in the face parallel to the y-z plane (fig. 6). To improve the behavior of the SSS under static as well as dynamic conditions, an alternative modified configuration was suggested. This configuration can be visualized as a rectangular box with three tetrahedrons superimposed at three faces of the box, as shown in figure 9. The basic box structure provides the spacing required between the photovoltaic modules, while the three tetrahedrons provide three support points during the launch in the Space Transportation System. This new configuration has 13 joints and 32 members instead of the 14 joints and 41 members of the original configuration. In addition, the new configuration of the SSS will be easier to fabricate since it has fewer members and nodes than the original configuration.

The optimum design for the modified configuration was again obtained with CometBoards using SUMT and IMSL optimizers. This design had 32 stress, 32 buckling, 32 crippling, 27 displacement, and 1 frequency constraints. Initial design, consisting of a 3.0-in. diameter and a 0.2-in. thickness was

TABLE II.—OPTIMUM DESIGN OF SHORT SPACER STRUCTURE

Design parameters	Original configuration		Modified configuration					
			Case I		Case II		Case III	
	SUMT	IMSL	SUMT	IMSL	SUMT	IMSL	SUMT	IMSL
· Initial design								
- diameter, in.	2.5	2.5	3.0	3.0	3.0	3.0	3.0	3.0
- thickness, in.	.2	.2	.2	.2	.2	.2	.2	.2
- number of design variables	1 (diam)	1 (diam)	1 (diam)	1 (diam)	4 (diam)	4 (diam)	2 (diam; thickness)	2 (diam; thickness)
· Optimum design								
- diameter, in.	2.0282	2.0277	1.9804	1.9797	2.0825 1.3390 1.5751 1.1798	2.0310 1.3381 1.5789 1.2000	4.8367	4.8514
- thickness, in.	.20	.20	.20	.20	.20	.20	.0270	.0268
· Optimum weight, lb	398.22	398.11	316.63	316.51	245.57	244.53	115.47	115.19
· Number of active constraints	1 (buckling)	1 (buckling)	1 (stress)	1 (stress)	3 (stress) 1 (frequency)	3 (stress) 1 (frequency)	4 (crippling), 1 (stress), and 1 (buckling)	4 (crippling), 1 (stress), and 1 (buckling)

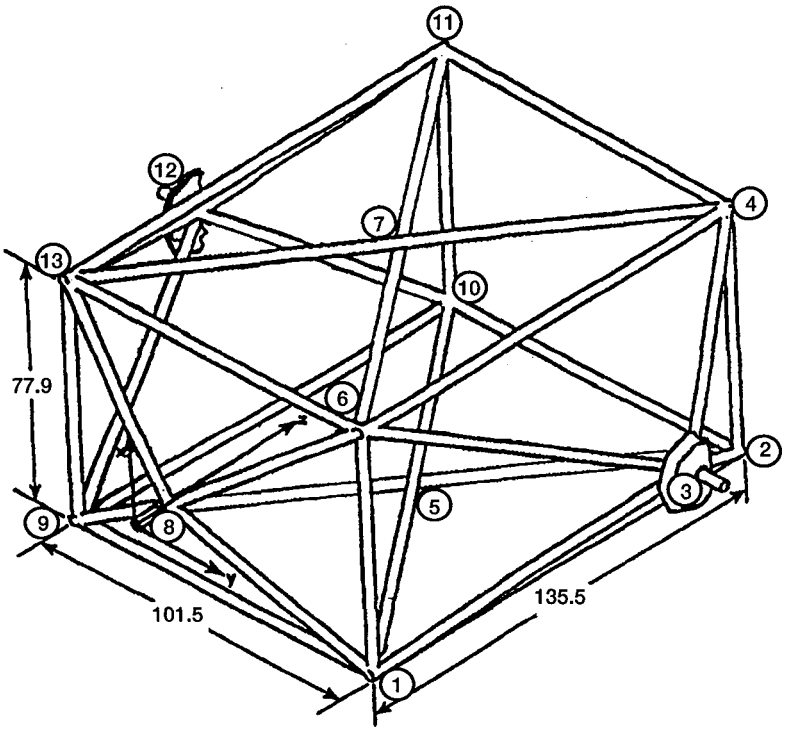

Figure 9.—Modified configuration of short spacer structure (dimensions given in inches).

obtained for the modified configuration by redistributing the original weight of 500 lb equally among its members. Three different design cases were considered.

Case I.—In the first case, all the frame members were linked to a single active design variable (i.e., the diameter of the cross section), while the thickness, considered a passive variable, was fixed at 0.2 in. Optimum results obtained by using SUMT and IMSL are in good agreement. At optimum, the diameters were 1.9804 and 1.9797 in. and the minimum weights were 316.63 and 316.51 lb by SUMT and IMSL, respectively (table II). The optimum weight is about 36 percent lighter than the manual design. Only one stress constraint, member (11-12) in figure 9, was active.

Case II.—In the second case, the 32 members were linked to give a reduced set of 4 active design variables. The first active design variable represented the diameter of the 8 members of the 2 tetrahedrons connected to the 2 longeron trunnions; the second active design variable represented the diameter of the 4 members of the tetrahedron connected to the keel trunnion; the third active design variable represented the diameter of the 12 members that form the layout of the box along the x-, y-, and z-axes; and the fourth design variable represented the diameter of the 8 diagonal members in the 2 planes parallel to the y-z plane. An initial diameter of 3.0 in. was assigned to each of the design variables, whereas the thickness was kept fixed at 0.2 in. (i.e., a passive design variable). The optimum weight obtained was 245.57 lb using SUMT and 244.53 lb using IMSL. The optimum design weight is about 50 percent lighter than the manual design. The optimum diameters of the four active design variables were 2.0825, 1.3390, 1.5751, and 1.1798 in. by SUMT and 2.0310, 1.3381, 1.5789, 1.2000 in. by IMSL, as shown in table II. The fundamental frequency constraint and three stress constraints were active for this optimum design.

Case III.—The third optimization case was carried out by linking all members so that they had the same cross-sectional area, but both the diameter and the thickness were considered active design variables. The optimum weights obtained were 115.47 lb using SUMT and 115.19 lb using IMSL. These designs are equivalent to cross sections of 4.8367 and 4.8514 in. in diameter and thicknesses of 0.0270 and 0.0268 in. by SUMT and IMSL, respectively. At optimum, six constraints were active: four crippling, one stress, and one buckling.

From a construction viewpoint, selecting a uniform cross section for all members will facilitate structure fabrication. Therefore, the optimum design obtained in the first case, in which the diameter was 1.9804 in. and the thickness was 0.2 in., can be considered to be the most practical design for the SSS.

Design for higher frequencies.—In the optimum designs of the SSS considered thus far, the frequency limitation of 6 Hz has been a passive constraint. Even though the design specifications of the structure are still being developed, it is likely that the frequency limit may have to be increased, thereby requiring

an SSS optimum design for higher frequencies. Before considering such a redesign, we examined the dynamic characteristics of the modified SSS shown in figure 9 by animating its fundamental frequency. Scrutiny of the dynamic animation indicated considerable flexibility and excessive deformations along the diagonals of the open face of the structure formed by nodes 2, 4, 11, and 10 (fig. 9). This face, which will be left open for on-orbit requirements, could however be braced on a temporary basis by two turnbuckles during launch. From analysis and dynamic animation, it has been found that turnbuckles with an area of 0.1 in.^{2} are very effective in reducing the excessive deformations along the diagonals. When the structure arrives on low-Earth orbit, the ties could be removed while the structure is in the cargo bay of the Space Shuttle, thus opening up the face for further integration with the Space Station.

Optimum designs for the modified configuration with and without the turnbuckles were obtained for the frequency constraint range of 6 to 14 Hz, while the other constraints were kept unchanged. The turnbuckles, with a total weight of 2.5 lb, were considered passive design variables. The specifications for optimum designs by SUMT at five different frequency limitations are shown in table III. Frequency constraints at 6 and 8 Hz were not active; the design was governed by stress constraints. At 10 Hz, both stress and frequency became active, whereas at both 12 and 14 Hz, frequency was the only active constraint. The optimum weights with and without turnbuckles are 393.61 and 456.15 lb for 12 Hz, and 460.57 and 525.82 lb for 14 Hz, respectively. In other words, the turnbuckles were found to be effective in reducing the weight of the spacer structure at higher frequencies.

Optimum Design of the Support System of the Long Spacer Structure (LSS)

The LSS of the Space Station, which is proposed to be launched while being attached to the IEA, (fig. 7), is considered as the second example to illustrate the capability of ComentBoards to design Space Station components. During launch in the space shuttle, the composite structure will be supported at six points: three located at the LSS and three located at the IEA. A typical cargo bay support system (fig. 8) is fabricated from an assemblage of plates that transfer the launch loads from the LSS cords to the hard points in the cargo bay. To prevent excessive deformations, the support system is attached to the top and bottom cords of the LSS through five frame members as shown in figure 8. The design of the LSS was obtained by following a procedure similar to that presented for the SSS and it is not given in this paper. However, the design optimization of the support system of the LSS is presented next. The actual support system is a rather intricate structure as shown in figure 8. For its design optimization, the support system was modeled into four major components. The first component was a closed box (FGHIJK) made of five plates, termed segment I; it is shown in blue in figure 8. The second component was a trapezoidal plate (FHEC), termed segment II; it is shown in yellow. The third and fourth components were triangular plates (GHE) and (GHD), termed segments III and IV; they are shown in green and red, respectively. The support model is connected to the upper and lower frame cords at four locations, A, B, C, and E, as shown in figure 8.

The support system was designed manually for the launch load environment. The manual design was then utilized to initiate finite element analysis and design optimization of the support system. In this manual design, a uniform plate thickness of 0.2 in. was specified for all plate segments, and a uniform tubular cross section with an outer diameter and thickness of 2.5 and 0.25 in., respectively, was specified for all frame members. Detailed finite element modeling was carried out for the support structure by using two analysis codes, LE_HOST and MSC/NASTRAN, for *emergency landing load* conditions. A model consisting of 135 quadrilateral shell elements for plate segments and 4 beam elements for each frame member provided an acceptable level of convergence for displacements and stresses and was considered adequate for design optimization.

TABLE III.—EFFECT OF DESIGN FREQUENCY ON OPTIMUM DESIGN OF SHORT SPACER STRUCTURE (Modified configuration)

Design frequency, Hz	Number of active constraints		Braced face		Open face	
	Stress	Frequency	Weight, lb	Diameter, in.	Weight, lb	Diameter, in.
6	1	--	320.38	1.98737	316.63	1.98004
8	1	--	320.38	1.98737	316.63	1.98004
10	1	1	331.17	2.04806	386.35	2.37243
12	--	1	393.61	2.39915	456.15	2.76489
14	--	1	460.57	2.77566	525.82	3.15667

The design optimization of the support system consisting of the four segments was obtained by using CometBoards and invoking active/passive design variable formulation; that is, the frame members were considered to be passive variables and their cross-sectional parameters were kept fixed at the values obtained by the manual design (i.e, diameter, 2.5 in. and thickness, 0.25 in.). In the design optimization process, the plate thicknesses of the four segments were considered active design variables. For calculations of behavior constraints, however, the entire structure was considered active. The minimum weight design was obtained for constraints and load conditions similar to those specified for the short spacer structure. For the purpose of design optimization, two models were considered: (1) an unstiffened plate model and (2) a stiffened plate model.

Unstiffened plate model.—For the unstiffened model, all shell elements that were used to idealize any of the four plate segments were linked through the design variable formulation to obtain a single design variable (the plate thickness). Thus, a total of four design variables were considered for the entire structure. The stress constraints at the nodes within each plate segment were grouped into a single patch by utilizing a constraint grouping scheme. At each patch, the most infeasible or active Von Mises stress was chosen as a behavior constraint; that is, one stress constraint was associated with each design variable. The optimum thicknesses of the plate segments determined by the SUMT optimization technique are given in table IV. The optimum design weight was 34.67 lb, which is 36 percent lighter than the initial design weight obtained manually. The maximum Von Mises stress contours of the support system optimum design are depicted in figure 10.

TABLE IV.—OPTIMUM DESIGN OF UNSTIFFENED PLATE SUPPORT SYSTEM FOR LONG SPACER STRUCTURE

[Initial weight, W_i, 54.353 lb; Optimum weight, W_o, 34.679 lb; $\frac{|W_o - W_i|}{W_i} = 36.2\%$]

Component number	Initial thickness, in.	Optimum design, in.	Active stress constraint
Plate segment			
I (blue)	0.2	0.1277	Yes
II (yellow)	0.2	.1295	Yes
III (green)	0.2	.1766	No
IV (red)	0.2	.02632	Yes

Stiffened plate model.—To achieve the stiffened plate model, stiffeners were introduced at the free edges of the plate model, that is, along CD, DE, DG, and CF. In addition, another stiffener was added diagonally between points D and F in the plate shown in yellow in figure 8. The initial stiffener cross section was a rectangle 1.0 in. deep and 0.25 in. wide. All stiffeners within a plate segment were linked to have the same cross section by using the design variable formulation. Two design variables, the depth and the width of the stiffener, were used for each stiffener group. Thus, the design problem had four design variables for the plate segments, and six design variables (two for each stiffener group) for the stiffeners. In addition to constraints specified for the unstiffened plate model, stress and buckling of the stiffeners were also considered design constraints. The design of the stiffened plate model was optimized under loads and boundary conditions identical to those of the unstiffened model. The optimum plate thicknesses and stiffener cross sections designed with the SUMT technique are given in table V. At optimum, three of the stress constraints in the plates and two of the buckling constraints in the stiffeners were active. The optimum weight was 32.227 lb, which is 7 percent less than the weight of the unstiffened model.

TABLE V.—OPTIMUM DESIGN OF STIFFENED PLATE SUPPORT SYSTEM FOR LONG SPACER STRUCTURE

[Initial weight, W_i, 59.549 lb; Optimum weight, W_o, 32.227 lb; $\frac{|W_o - W_i|}{W_i} = 45.9\%$]

Component number	Design variable	Initial design, in.	Optimum design, in.	Active stress constraints
Plate segment				
I (blue)	Thickness	0.2	0.1284	Yes
II (yellow)	Thickness	0.2	.0724	Yes
III (green)	Thickness	0.2	.1359	No
IV (red)	Thickness	0.2	.0121	Yes
Beam segment				
I (yellow)	Depth	1.0	.4565	Yes
	Width	.25	.4545	(buckling)
II (green)	Depth	1.0	.6287	No
	Width	.25	.6201	
III (red)	Depth	1.0	.3026	Yes
	Width	.25	.3061	(buckling)

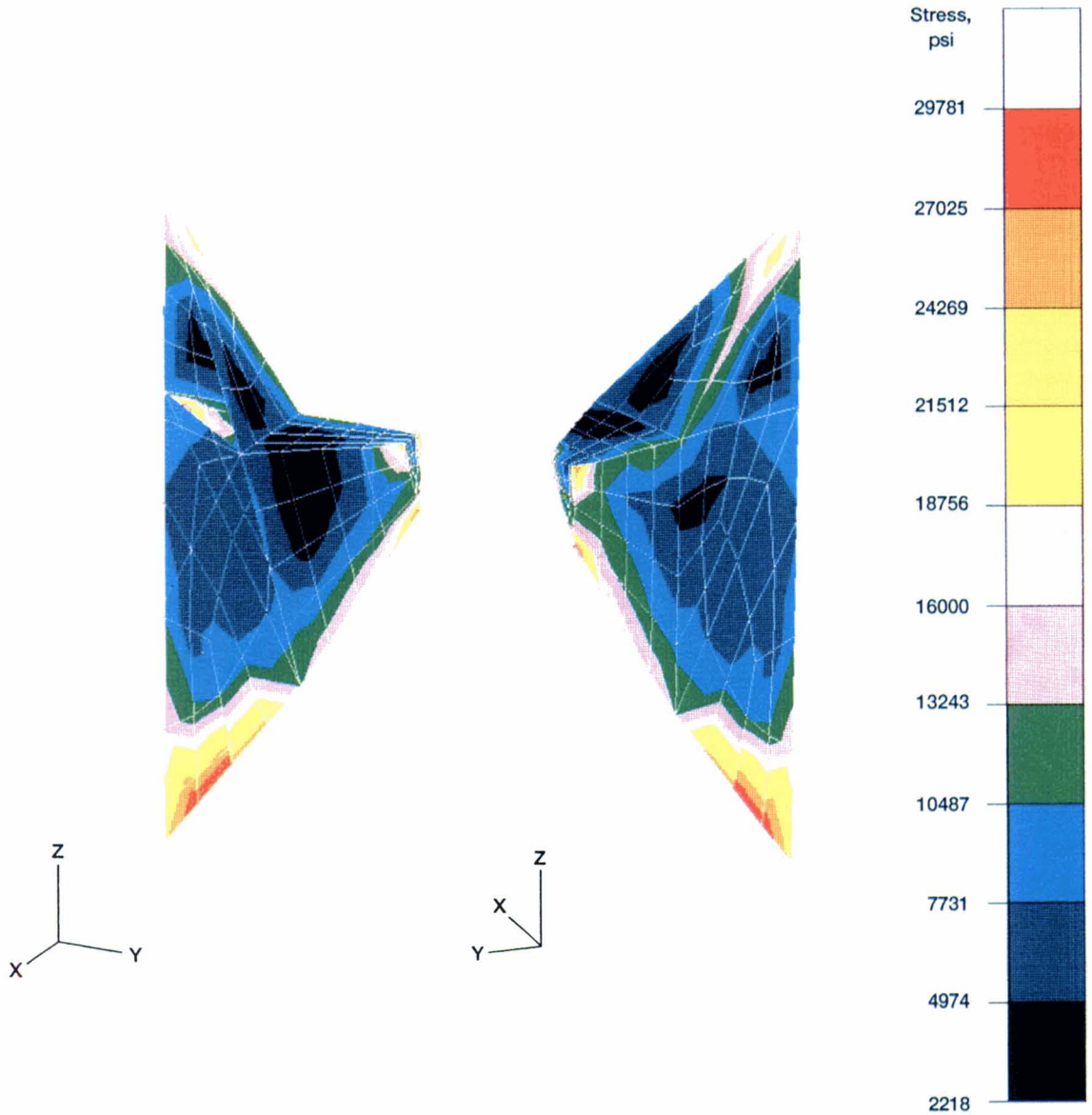

Figure 10.—Stress contours of optimum design of support system of long spacer structure.

Optimization Using Substructuring Technique

The substructuring technique available in CometBoards for design optimization of large structural systems is illustrated by considering the modified configuration of the SSS (case II, discussed previously in the section entitled "Optimum Design of the Short Spacer Structure (SSS)") as an example. The 32 members of the spacer structure are divided into 4 substructures for the purpose of design. The first substructure contains 12 members of the 3 tetrahedrons connected to the longeron and the keel trunnions, as shown in figure 11(a) in solid lines. The second substructure contains 16 members, 4 are connected to the keel trunnion and the other 12 form the layout box along the x-, y-, and z-axes, as shown in figure 11(b). The third substructure has 20 members consisting of 12 members that form the layout box along the x-, y-, and z-axes and 8 diagonal members located in the y-z planes, as shown in figure 11(c). The fourth substructure (shown in fig. 11(d) in solid lines) has 16 members; 8 belong to the diagonal in the y-z planes and 8 are members connected to the longeron trunnions. Notice the overlapping between the substructures; for example, the members connected to the keel trunnion are common members between the first and second substructures. As mentioned earlier, convergence difficulty can be encountered without this overlapping, especially when displacement and frequency constraints become active, which is the case in this example.

As in case II, the 32 members of the frame were grouped to obtain a reduced set of 4 active design variables, which are: (1) the diameter of the members that are connected to the two longeron trunnions; (2) the diameter of the members connected to the keel trunnion; (3) the diameter of the members that form the box layout in the x-, y-, and z-axes; and (4) the diameter of the diagonals in the y-z planes, respectively. Each substructure has two active design variables; namely, substructure (1) contains the first and second design variables; substructure (2) contains the second and third design variables; substructure (3) includes the third and fourth design variables; and substructure (4) includes the fourth and first design variables.

The behavior constraints were separated into two sets. The first set includes the local stress and buckling constraints associated with each substructure. The local behavior constraints are reduced following the constraint grouping scheme to 24, 32, 40, and 32 constraints for the four substructures, (1), (2), (3), and (4), respectively. Taken into consideration here are 1 stress and 1 buckling constraint for each member as in case II. The other set includes the global displacement and frequency constraints which are assigned to be the same for all substructures and specified as in case II, that is, 27 displacement and 1 frequency constraints. The total behavior constraints for the four substructures are 52, 60, 68, and 60, respectively. The

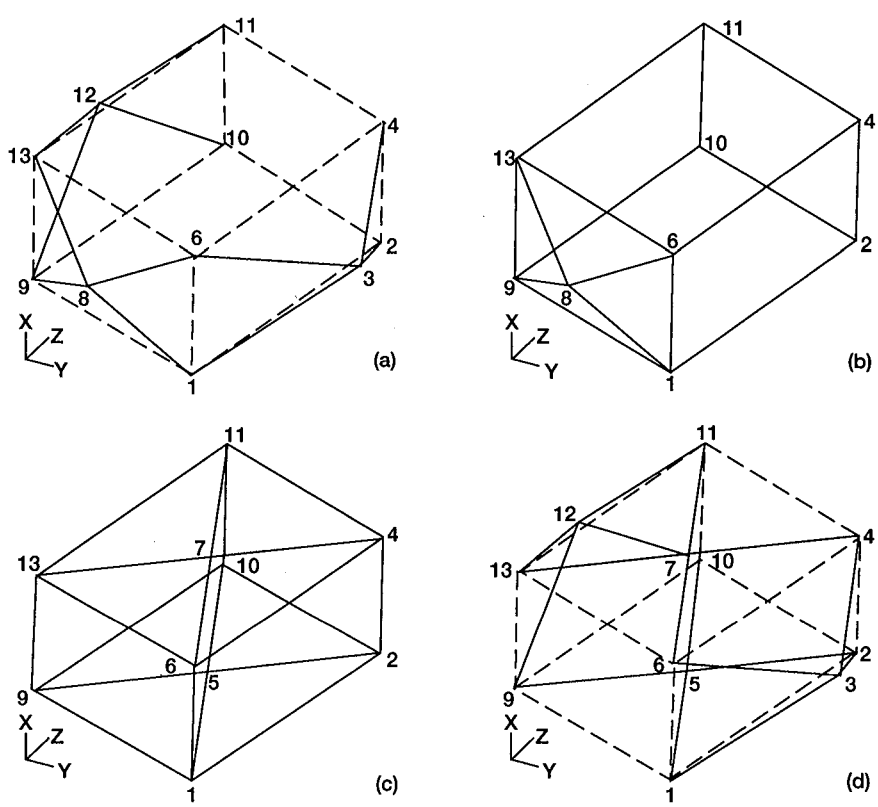

Figure 11.—Substructures of modified configuration of short spacer structure. (a) Substructure 1. (b) Substructure 2. (c) Substructure 3. (d) Substructure 4.

TABLE VI.—OPTIMUM DESIGN OF SHORT SPACER STRUCTURE USING SUBSTRUCTURING TECHNIQUE

Design parameters	SUMT		IMSL	
	Entire structure	Substructuring	Entire structure	Substructuring
· Initial design				
- diameter, in.	3.0	3.0	3.0	3.0
- thickness, in.	.2	.2	.2	.2
· Optimum design				
- diameter, in.	2.0825	2.0314	2.0310	2.0298
	1.3390	1.3386	1.3381	1.3381
	1.5751	1.5796	1.5789	1.5791
	1.1798	1.2004	1.2000	1.2004
- thickness, in.	.2	.2	.2	.2
· Optimum weight, lb	245.57	244.62	244.53	244.49

design of the SSS through substructuring technique was carried out using two optimizers, that is, SUMT and IMSL. The final optimum design was obtained after three complete cycles, which totalled 12 substructuring design optimization processes. The optimum designs obtained by both optimizers are given in table VI alongside those obtained by considering the entire structure as a single unit. Table VI illustrates that the optimum weight obtained using the substructuring technique is in good agreement with that obtained from the design of the entire structure as a single unit.

Concluding Remarks

Design using the CometBoards code with the dynamic animation of PATRAN software, has produced optimum designs for Space Station components. These designs are more than 36 percent lighter than the manual designs, which were obtained through traditional design methods. The optimum design of the short spacer structure would be easier to fabricate since it has fewer nodes and members than the manual design. Furthermore, the natural frequency of the structure during the launch phase can be improved without appreciable weight penalty through the use of turnbuckles.

The capability of formulating design variables and grouping constraints, which is available in CometBoards, permits component synthesis; that is, a small component of a large complex structure can be optimized without changing the remainder of the structure.

Design optimization of large structural systems with many design variables and many behavior constraints can be attempted through a substructure optimization technique available in CometBoards. In such a technique, the optimal design for the original structure is obtained iteratively through repeated design optimization of each of the substructures until convergence occurs. Through this technique, optimum design of a large structural system can be more successfully accomplished; otherwise, it may be difficult to obtain in single-step.

The multiple optimizers and analyzers available in CometBoards help eliminate errors that may accrue from analysis or nonlinear mathematical programming techniques used in the optimum design. CometBoards has the potential to reduce the weight of flight components used in aerospace industries.

Appendix—Optimization Literature Review

Problem description	Analysis tool(s)	Optimization algorithm(s)	Design variables	Behavior constraints	Reference
Trusses; minimum weight	Finite element analysis program "TRUSSOPT"	SQP in IDESIGN3; NPSOL; PLBA	· Bar areas; linking available (D V range 7-96)	· Stress · Displacement · Frequency	16
Trusses; minimum weight	Finite elements	Optimality criteria	· Bar areas; no linking	· Stress · Displacement	17
Trusses; minimum weight	Finite elements	Optimality criteria	· Bar areas; no linking (489 D V)	· Multiple frequencies	18
Trusses; minimum weight	Force method	Generalized reduced gradient	· Bar areas; no linking (200 D V)	· Stress · Displacement	19
Trusses; minimum weight	Force method	Feasible directions	· Bar areas; linking available (D V range 3-36)	· Stress · Buckling · Displacement	20
Wings; minimum weight	Finite elements	SUMT	· Skin thicknesses · Shear panel thicknesses · Bar areas · Sweep back angle (linking available)	· Stress · Buckling · Displacement · Frequency	21
Trusses, swept wing, and delta wing; minimum weight	Finite elements	· DUAL2 in "ACCESS3" · NEWSUMT	· Bar areas · Skin thicknesses · Shear panel thicknesses	· Stress · Displacement · Frequency	22
Beams with channel cross section; minimum fundamental frequency	Finite elements	Optimality criteria	· Flange thickness · Web thickness	· Mass of beams	23
Beams with rectangular and wide flange cross sections; minimum weight	Finite element analysis program "SAP4"	Feasible directions in "ADS"	· Beam depth/width · Flange thickness/ width and web thickness/height	· Stress · Displacement	24
Braced and unbraced plane frames with wide flange sections; minimum weight	Finite elements	Optimality criteria	· Flange thickness/ width and web thickness/height	· Stress · Displacement · Frequency	25
Shafts; minimum weight	Finite elements	Optimality criteria	· Beam areas; linking available (D V range 2-27)	· Frequency	26
Cantilever beams with variable cross sections; minimum weight	Analytical solution	· Sequential ordinary · Gradient restortion · Modified quasi-linearization	· Beam areas; no linking (D V range 2-12)	· Frequency	27
Plane frames with thin-walled sections, minimum weight	Finite elements	· Nonlinear programming technique · Fully stressed design	· Beams sectional moment of inertia	· Stress · Local instability	28

Appendix—Continued

Problem description	Analysis tool(s)	Optimization algorithm(s)	Design variables	Behavior constraints	Reference
Linearly tapered cooling fin; minimum weight	Finite elements	Optimality criteria	· Beam nodal areas or thickness, no linking	· Temperature	29
Plane frames with wide flange sections; minimum weight	Finite elements	Optimality criteria	· Flange thickness/ width and web thickness/height; no linking (70 D V)	· Stress · Local flange/web buckling	30
Space frames with symmetrical box sections; minimum weight	Finite elements	SUMT; DUAL2	· Wall thickness and width (D V range 8-16)	· Stress · Displacement · Local buckling	31
Plates; minimum weight	Finite elements	Optimality criteria	· Plate thicknesses, no linking (64 D V)	· Stress · Single displacement	32
Truss, delta wing, and plate; minimum weight	Finite element analysis program "SPAR"	SUMT	· Bar areas · Membrane thickness · Plate thickness (linking available)	· Stress · Displacement · Thermal · Subsonic flutter	33
Stiffened plates; minimum weight	Analytical solution	SUMT	· Plate thickness · Stiffener width/ depth · Stiffener spacing	· Stress · Displacement	34
Cylindrical shells with T-ring stiffeners; minimum weight	Analytical solution	SUMT	· Shell thickness · Flange thickness/ width and web thickness/height · Stiffener spacing	· Stress · Buckling · Local instability of panel, flange/web of stiffener	35
Stiffened cylindrical shells; minimum weight	Analytical solution	SUMT	· Shell thickness · Beam width/depth · Stiffeners spacing	· Stress · Displacement · Frequency	36
Axially loaded cylindrical and conical shells with stringers and rings; minimum weight	Analytical solution	Davidon-Fletcher-Powel method	· Shell thickness · Stiffener width/ depth and spacing · Number of rings and stringers	· Stress · Buckling · Local instability · Frequency	37, 38
Truss, beam, and plane stress structures; minimum weight by "ASTROS"	Finite element analysis program "NASTRAN"	Feasible directions "MICRODOT"	· Bar/beam areas · Membrane thickness (linking available)	· Stress · Displacement · Frequency · Flutter	39

Appendix—Concluded

Problem description	Analysis tool(s)	Optimization algorithm(s)	Design variables	Behavior constraints	Reference
Aircraft components; minimum weight by "MBB_ LAGRANGE"	Finite element analysis program "NASTRAN"	· Inverse barrier function · Method of multipliers · Sequential linear programming · Stress ratio · Recursive quadratic programming · Reduced gradients	· Skin thickness · Balance masses · Fiber directions · Grid point coordinates	· Stress/strain · Buckling · Displacement · Frequency · Local instability · Flutter speed · Divergence speed	40
Aircraft composite components; minimum weight by "FASTOP"	Finite elements	Optimality criteria, fully stressed design	· Layer thickness	· Stress · Displacement · Flutter	41, 42
Aerospace and automotive structures; minimum weight by "OPTSYS"	Finite element analysis programs "ASKA" and "ABAQUS"	Sequential convex approximation	· Cross sectional dimensions · Fiber direction · Node positions · Shape description	· Stress · Displacement · Frequency · Buckling · Flutter speed · Aeroelastic efficiency	43
Truss, beam membrane, and shell structures; minimum weight by "CometBoards _2.0"	· Finite element analysis programs "LE_HOST" and "ANALYZE" · Force method	SLP, IMSL, SQP, SUMT, etc.	· Bar areas · Beam nodal width/ depth · Shell thickness (linking available)	· Stress · Buckling · Displacement · Frequency	12

References

1. Gallagher, R.H.; and Zienkiewicz, O.C.: Optimum Structural Design. John Wiley & Sons, 1973.
2. Venkayya, V.B.; Khot, N.S.; and Berke, L.: Application of Optimality Criteria Approaches to Automated Design of Large Practical Structures. Second Symposium on Structural Optimization, AGARD CP–123, Vol. 3, 1973, pp. 1–19.
3. Zoutendijk, G.: Methods of Feasible Directions: A Study in Linear and Nonlinear Programming. Elsevier, New York, 1960.
4. Dantzig, G.: Linear Programming and Extensions. Princeton University Press, Princeton, NJ, 1963.
5. International Mathematical and Statistical Library. Math/Library: User's Manual, Version 1.1, Chapter 8.4: Optimization: Nonlinear Constraint Minimization. IMSL, Houston, TX, 1989.
6. Arora, J.S.; and Tseng, C.H.: IDESIGN User's Manual. Optimal Design Laboratory, Technical Report No. ODL–87.1, The University of Iowa, Iowa City, IA, 1987.
7. Miura, H.; and Schmit, L.A., Jr.: NEWSUMT—A Fortran Program for Inequality Constrained Function Minimization. User's Guide. NASA CR–159070, 1979.
8. Patnaik, S.N., et al.: A Test Bed to Evaluate Mathematical Programming Techniques for Structural Design Applications. NASA Lewis Research Center, Cleveland, OH, to be published.
9. Nakazawa, S.: MHOST Version 4.2. Vol. 1: User's Manual. NASA CR–182235–VOL–1, 1989.
10. Venkayya, V.; and Tischler, V.: "ANALYZE"—Analysis of Aerospace Structures with Membrane Elements. Technical Report AFFDL–TR–78–170, Wright-Patterson AFB, OH, 1978.
11. Patnaik, S.N., et al.: Improved Accuracy for Finite Element Structural Analysis Via a New Integrated Force Method. NASA TP–3204, 1992.
12. Guptill, J.D., et al.: CometBoards. User's Manual. NASA TM-4537, 1994.
13. Young, W.C.: Roark's Formulas for Stress and Strain. Sixth ed. McGraw-Hill, Inc., New York, 1989.
14. Chajes, A.: Principles of Structural Stability Theory. Prentice-Hall, Englewood Cliffs, NJ, 1974.
15. Vinson, J.R.: Structural Mechanics: The Behavior of Plates and Shells. John Wiley & Sons, Inc., New York, 1974.
16. Thanedar, P.B., et al.: Performance of Some SQP Algorithms on Structural Design Problems. Int. J. Num. Methods Eng., vol. 23, Dec. 1986, pp. 2187–2203.
17. Fleury, C.: An Efficient Optimality Criteria Approach to the Minimum Weight Design of Elastic Structures. Comput. Struct., vol. 11, Mar. 1980, pp. 163–173.
18. Grandhi, R.V.; and Venkayya, V.B.: Structural Optimization with Frequency Constraints. AIAA J., vol. 26, no. 7, 1988, pp, 858–866.
19. Joseph, K.T.: A New Implementation of the Force Method and the Optimum Design of Large Trusses. Int. J. Num. Methods Eng., vol. 28, Apr. 1989, pp. 893–907.
20. Vanderplaats, G.N.; and Moses, F.: Structural Optimization by Methods of Feasible Directions. Comput. Struct., vol. 3, July 1973, pp. 739–755.
21. Rao, V.R.; Iyengar, N.G.R.; and Rao, S.S.: Optimization of Wing Structures to Satisfy Strength and Frequency Requirement. Comput. Struct., vol. 10, Aug. 1979, pp. 669–674.
22. Schmit, L.A.; and Fleury, C.: Structural Synthesis by Combining Approximation Concepts and Dual Methods. AIAA J., vol. 18, no. 10, 1980, pp. 1252–1260.
23. Hanagud, S.; Chattopadhyay, A.; and Smith, C.V.: Optimum Design of Vibrating Beam with Coupled Bending and Torsion. AIAA J., vol. 25, no. 9, 1987, pp. 1231–1240.
24. Yoshida, N.; and Vanderplaats, G.N.: Structural Optimization Using Beam Elements. AIAA J., vol. 26, no. 4, 1988, pp. 454–462.
25. Cheng, F.Y.; and Srifuengfung, D.: Optimum Structural Design for Simultaneous Multicomponent Static and Dynamic Inputs. Int. J. Num. Methods Eng., vol. 13, no. 2, 1978, pp. 353–371.
26. Kiusalaas, J.; and Shaw, R.C.: An Algorithm for Optimal Structural Design With Frequency Constraints. Int. J. Num. Methods Eng., vol. 13, no. 2, 1978, pp. 283–295.
27. Miele, A., et al.: Numerical Determination of Minimum Mass Structures With Specified Natural Frequencies. Int. J. Num. Methods Eng., vol. 13, no. 2, 1978, pp. 265–282.
28. Felton, L.P.; and Nelson, R.B.: Optimized Components in Frame Synthesis. AIAA J., vol. 9, no. 6, 1971, pp. 1027–1031.
29. Venkateswara, R.G.: Tapered Finite Elements in the Optimality Criterion Approach. AIAA J., vol. 19, no. 2, 1981, pp. 251–252.
30. Khan, M.R.; Thornton, W.A.; and Willmert, K.D.: Optimization of Structures With Multiple Design Variables Per Member. AIAA J., vol. 20, no. 9, 1982, pp. 1282–1283.
31. Mills-Curran, W.C.; Lust, R.V.; and Schmit, L.A.: Approximations Method for Space Frame Synthesis. AIAA J., vol. 21, no. 11, 1983, pp. 1571–1580.
32. Armand, J.L.; and Lodier, B.: Optimal Design of Bending Elements. Int. J. Num. Methods Eng., vol. 13, no. 2, 1978, pp. 373–384.
33. Haftka, R.T.; and Prasad, B.: Programs for Analysis and Resizing of Complex Structures. Comput. Struct., vol. 10, no. 3, 1979, pp. 323–330.
34. Patnaik, S.N.: Synthesis of Waffle Plates in the Post Buckled Domain. Comput. Methods Appl. Mech. Eng., vol. 4, July 1974, pp. 577–586.
35. Bronwick, A.J., et al.: Optimization of Ring Stiffened Cylindrical Shells. AIAA J., vol. 13, no. 10, 1975, pp. 1319–1325.
36. Patnaik, S.N.; and Shankaran, G.: Optimum Design of Stiffened Cylindrical Panels With Constraint of Frequencies in the Presence of Initial Stress. Int. J. Num. Methods Eng., vol. 10, no. 2, 1976, pp. 773–789.
37. Rao, S.S.; and Reddy, E.S.: Optimum Design of Stiffened Cylindrical Shells With Natural Frequency Constraints. Comput. Struct., vol. 12, Aug. 1980, pp. 211–219.
38. Rao, S.S.; and Reddy, E.S.: Optimum Design of Stiffened Conical Shells With Natural Frequency Constraints. Comput. Struct., vol. 14, no. 1–2, 1981, pp. 103–110.
39. Automated Structural Optimization System (ASTROS). Technical Report AFWAL–TR–88–3028, 1988.
40. Kneppe, G.: MBB-LAGRANGE: Structural Optimization System for Space and Aircraft Structures. Report MBB/FW522/S1PUB1406. Presented at the COMMET Seminar: Computer Aided Optimal Design, University of Bayreuth, FR Germany, 1990.
41. Makowitz, J.; and Isakson, G.: FASTOP–3: A Strength, Deflection, and Flutter Optimization Program for Metallic and Composite Structures. Vol. 1: Theory and Application. Technical Report AFFDL–TR–78–50–VOL–1, Grumman Aerospace Corp., Bethpage, NY, 1978.
42. Makowitz, J.; and Isakson, G.: FASTOP–3: A Strength, Deflection, and Flutter Optimization Program for Metallic and Composite Structures. Vol. 2: Program User's Manual. Technical Report AFFDL–TR–78–50–VOL–2, Grumman Aerospace Corp., Bethpage, NY, 1978.
43. Brama, T.; and Rossengren R.: Application of Structural Optimization Program OPTSYS. ICAS, Congress, 17th, Proceedings, Vol. 1, AIAA, Washington, DC, 1990, pp. 40–44.
44. National Space Transportation System. NSTS–20052, Vol. 8: Structural/Mechanical Interfaces and Requirements. NASA Johnson Space Center, Houston, TX, 1988.
45. National Space Transportation System. NSTS–07700, ICD–2–19001, Rev. K.: Shuttle Orbit/Cargo Standard Interfaces. NASA Johnson Space Center, Houston, TX, 1991.
46. MSC/NASTRAN—NASA Structural Analysis. The MacNeal-Schwendler Corp., Los Angeles, CA, 1981.
47. Armand, S.C.; and Dohogne, C.A.: Design Feasibility Study of a Space Station Freedom Truss. NASA TM–105558, 1992.
48. PATRAN II User's Manual. PDA Engineering, Santa Ana, CA, 1984.

REPORT DOCUMENTATION PAGE

Form Approved
OMB No. 0704-0188

Public reporting burden for this collection of information is estimated to average 1 hour per response, including the time for reviewing instructions, searching existing data sources, gathering and maintaining the data needed, and completing and reviewing the collection of information. Send comments regarding this burden estimate or any other aspect of this collection of information, including suggestions for reducing this burden, to Washington Headquarters Services, Directorate for Information Operations and Reports, 1215 Jefferson Davis Highway, Suite 1204, Arlington, VA 22202-4302, and to the Office of Management and Budget, Paperwork Reduction Project (0704-0188), Washington, DC 20503.

1. AGENCY USE ONLY (*Leave blank*)

2. REPORT DATE
November 1994

3. REPORT TYPE AND DATES COVERED
Technical Memorandum

4. TITLE AND SUBTITLE
Weight Minimization of Structural Components for Launch in the Space Shuttle

5. FUNDING NUMBERS
WU–474–46–10
G–NAG3–1350

6. AUTHOR(S)
Surya N. Patnaik, Atef S. Gendy, Dale A. Hopkins, and Laszlo Berke

7. PERFORMING ORGANIZATION NAME(S) AND ADDRESS(ES)
National Aeronautics and Space Administration
Lewis Research Center
Cleveland, Ohio 44135–3191

8. PERFORMING ORGANIZATION REPORT NUMBER
E–8713

9. SPONSORING/MONITORING AGENCY NAME(S) AND ADDRESS(ES)
National Aeronautics and Space Administration
Washington, D.C. 20546–0001

10. SPONSORING/MONITORING AGENCY REPORT NUMBER
NASA TM–4586

11. SUPPLEMENTARY NOTES
Surya N. Patnaik, Ohio Aerospace Institute, 22800 Cedar Point Road, Brook Park, Ohio 44142; Atef S. Gendy, University of Akron, Department of Civil Engineering, Akron, Ohio 44325 and NASA Resident Research Associate at Lewis Research Center; Dale A. Hopkins and Laszlo Berke, NASA Lewis Research Center. Responsible person, Surya N. Patnaik, organization code 5210, (216) 433–8468

12a. DISTRIBUTION/AVAILABILITY STATEMENT
Unclassified - Unlimited
Subject Category 39

12b. DISTRIBUTION CODE

13. ABSTRACT ***(Maximum 200 words)***

Minimizing the weight of structural components of the Space Station launched onto orbit in a space shuttle can save cost, reduce the number of space shuttle missions, and facilitate on-orbit fabrication. Traditional manual design of such components, although feasible, cannot represent a minimum weight condition. At NASA Lewis Research Center, a design capability called CometBoards (Comparative Evaluation Test Bed of Optimization and Analysis Routines for the Design of Structures) has been developed especially for the design optimization of such flight components. Two components of the Space Station—a spacer structure and a support system—illustrate the capability of CometBoards. These components are designed for loads and behavior constraints that arise from a variety of flight accelerations and maneuvers. The optimization process using CometBoards reduced the weights of the components by one third from those obtained with traditional manual design. This paper presents a brief overview of the design code CometBoards; and a description of the Space Station components, their design environments, behavior limitations, and attributes of their optimum designs.

14. SUBJECT TERMS
Space Station Freedom; Spacer structures; Minimum weight design; Launch loads; CometBoards; Design variable formulation; Constraint grouping; Substructuring technique

15. NUMBER OF PAGES
25

16. PRICE CODE
A03

17. SECURITY CLASSIFICATION OF REPORT	18. SECURITY CLASSIFICATION OF THIS PAGE	19. SECURITY CLASSIFICATION OF ABSTRACT	20. LIMITATION OF ABSTRACT
Unclassified	Unclassified	Unclassified	

National Aeronautics and
Space Administration

Lewis Research Center
21000 Brookpark Rd.
Cleveland, OH 44135-3191

Official Business
Penalty for Private Use $300

POSTMASTER: If Undeliverable — Do Not Return

NASA Technical Library
3 1176 01418 7653