IN-33
55820
p. 30

NASA
Technical
Paper
3513

May 1995

ORIGINAL CONTAINS
COLOR ILLUSTRATIONS
4

Three-Dimensional Simulation of Traveling-Wave Tube Cold-Test Characteristics Using MAFIA

Carol L. Kory
and Jeffrey D. Wilson

(NASA-TP-3513) THREE-DIMENSIONAL SIMULATION OF TRAVELING-WAVE TUBE COLD-TEST CHARACTERISTICS USING MAFIA (NASA. Lewis Research Center) 30 p

N95-29998

Unclas

H1/33 0055820

National Aeronautics and
Space Administration

NASA Technical Paper 3513

1995

Three-Dimensional Simulation of Traveling-Wave Tube Cold-Test Characteristics Using MAFIA

Carol L. Kory
Analex Corporation
Brook Park, Ohio

Jeffrey D. Wilson
Lewis Research Center
Cleveland, Ohio

National Aeronautics and
Space Administration

Office of Management

Scientific and Technical
Information Program

1995

Three-Dimensional Simulation of Traveling-Wave Tube Cold-Test Characteristics Using MAFIA

Carol L. Kory
Analex Corporation
Brook Park, Ohio 44142

and

Jeffrey D. Wilson
National Aeronautics and Space Administration
Lewis Research Center
Cleveland, Ohio 44135

Summary

The three-dimensional simulation code MAFIA was used to compute the cold-test parameters—frequency-phase dispersion, beam on-axis interaction impedance, and attenuation—for two types of traveling-wave tube (TWT) slow-wave circuits. The potential for this electromagnetic computer modeling code to reduce the time and cost of TWT development is demonstrated by the high degree of accuracy achieved in calculating these parameters. Generalized input files were developed for ferruled coupled-cavity and TunneLadder slow-wave circuits. These files make it easy to model circuits of arbitrary dimensions. The utility of these files was tested by applying each to a specific TWT slow-wave circuit and comparing the results with experimental data. Excellent agreement was obtained.

Introduction

MAFIA (solution of Maxwell's equations by the Finite Integration Algorithm), version 3.10, is a powerful, three-dimensional electromagnetic code written in FORTRAN 77. This code is used for the computer-aided design of fully three- and two-dimensional electromagnetic devices, such as magnets, radiofrequency (RF) cavities, waveguides, and antennas. The Finite Integration Technique algorithm in MAFIA produces a set of finite-difference matrix equations for the electric and magnetic field vectors in the structure under study. The solution of these equations yields static, frequency-domain or time-domain solutions of Maxwell's equations (refs. 1 and 2).

The code includes 10 multisection modules that have the interrelationships shown in figure 1. For this report, only four of MAFIA's modules were used to calculate the cold-test parameters: the M (mesh generator), R (matrix generator for E), E (eigenmode solver), and P (postprocessor) modules. The remaining modules are the S (static solver), T2 and T3 (two-dimensional and three-dimensional time-domain solvers, respectively), TS2 and TS3 (two-dimensional and three-dimensional particle-in-cell codes, respectively), and W3 (frequency-domain, eddy-current solver) modules.

Traditionally, hardware cold-testing procedures have been used to determine the RF phase shift (frequency-phase dispersion), interaction impedance, and attenuation of a cavity. In this report, the practicality and efficiency of four of the MAFIA modules described in the previous paragraph were demonstrated by using MAFIA instead of experimental cold testing to obtain these parameters for ferruled coupled-cavity and TunneLadder traveling-wave tube (TWT) slow-wave circuits. The MAFIA results were compared with experimental cold-test results with excellent agreement, indicating that time-consuming and costly hardware cold-test measurements can be avoided. Data from MAFIA simulations can be used as input for a coupled-cavity TWT RF-beam interaction computer model (ref. 3) that simulates the output RF power and beam characteristics of a TWT.

This report also demonstrates the utility of using generalized MAFIA input files for ferruled coupled-cavity or TunneLadder TWT circuits. By simply replacing the existing dimensions with the dimensions of the circuit of interest, one can readily determine dispersion curves, beam on-axis interaction impedance, and attenuation characteristics for any ferruled coupled-cavity or TunneLadder TWT circuit.

A symbols list is provided in appendix A to assist the reader.

Background

The first MAFIA simulation reported here models the ferruled coupled-cavity slow-wave circuit of Hughes Aircraft Company's 961HA TWT (which was developed under NASA Contract NAS3–25090, ref. 4). The 961HA is a 70-W, 59- to 64-GHz TWT for intersatellite communications. The design is a revision of an earlier model, the 961H (ref. 5), which had a slot mode oscillation problem caused by the interaction of the electron beam with the slot mode at the upper cutoff frequency.

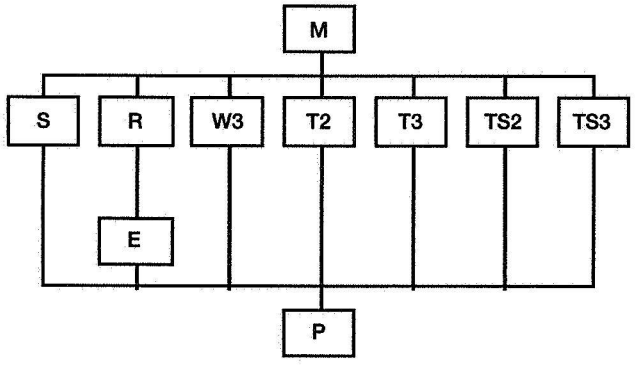

Figure 1.—MAFIA code structure showing the interrelationships between modules.

Rousseau et al. solved this problem (ref. 5), by adjusting the dimensions of the coupling slot in the 961HA to shift the slot mode down in frequency.

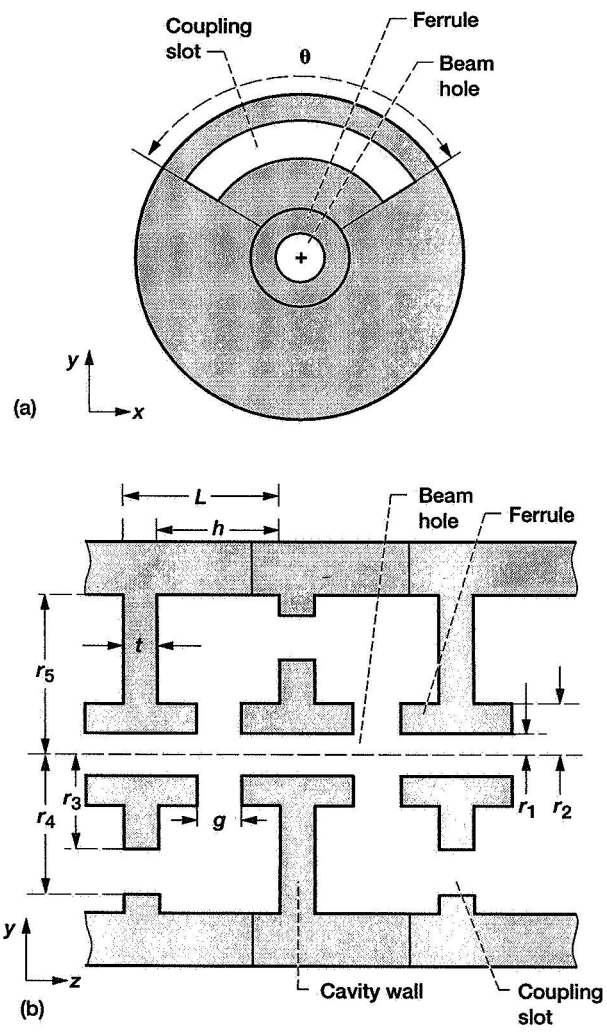

Figure 2.—Generalized ferruled coupled-cavity TWT circuit (see table I). (a) End view. (b) Top view.

The end and top views of the generalized ferruled coupled-cavity circuit are shown schematically in figures 2(a) and (b), respectively. The coupling slots are rotated 180° at alternating cavity partition walls. The ferrules, which are the hollow posts surrounding the beam hole, concentrate the RF electric field in the beam region to increase the interaction impedance of the cavity. Table I lists the dimensions of a single cavity of the Hughes 961HA TWT. The circuit has 166 cavities over three sections, with a gradual, two-stage velocity taper in the output section.

TABLE I. —DIMENSIONS OF 961HA FERRULED COUPLED-CAVITY TWT CIRCUIT
[See fig. 2. All dimensions in millimeters.]

Ferrule inner radius, r_1	0.2794
Ferrule outer radius, r_2	0.4318
Slot inner radius, r_3	0.6858
Slot outer radius, r_4	1.1049
Cavity radius, r_5	1.1049
Ferrule gap, g	0.2921
Cavity gap, h	0.7518
Wall thickness, t	0.2159
Cavity length, L	0.9677
Slot arc, θ, deg	140

The second simulation modeled the 29-GHz TunneLadder TWT slow-wave circuit (which was fabricated and tested by Varian Associates, Inc., under contract to NASA Lewis Research Center, NAS3–22466, ref 6). The TunneLadder is a millimeter-wave TWT with a fundamental forward-wave, slow-wave circuit derived from the Karp circuit (refs. 7 and 8). Operating with a fundamental forward wave allows a higher rate of gain with distance than with backward wave interaction. Karp (ref. 9) showed that this advantage can be further enhanced in the TunneLadder circuit by forming the ladder into a quasi-elliptical shape, thereby creating a tunnel through which the beam passes (fig. 3). This tunnel is supported by diamond dielectric chips in a double-ridge waveguide. The resulting TunneLadder circuit is a narrow bandwidth, high-efficiency, and mechanically sturdy millimeter wave amplifier. Its dimensions are listed in table II.

Two 29-GHz TunneLadder TWT's, fabricated and tested by Varian Associates, Inc., successfully demonstrated the high gain per length and interaction efficiency attainable with this narrow bandwidth circuit. The length of the slow-wave circuit was only 2.86 cm, and the 10-kV, 215-mA electron beam was focused with a single permanent magnet. The first TWT (S/N 101) achieved a peak saturated RF output power of 365 W, a very high interaction efficiency of 17.0 percent, and a 3-dB bandwidth of 2.3 percent under pulsed operation. Because of an apparent vacuum leak, S/N 101 could not be operated under continuous wave conditions. The second TWT (S/N 102) was operational at continuous wave, with a peak saturated RF output power of 316 W, an interaction efficiency of 13.8 percent, and a bandwidth of 2.8 percent. The lower values of efficiency and power may have been due to a poor match in the

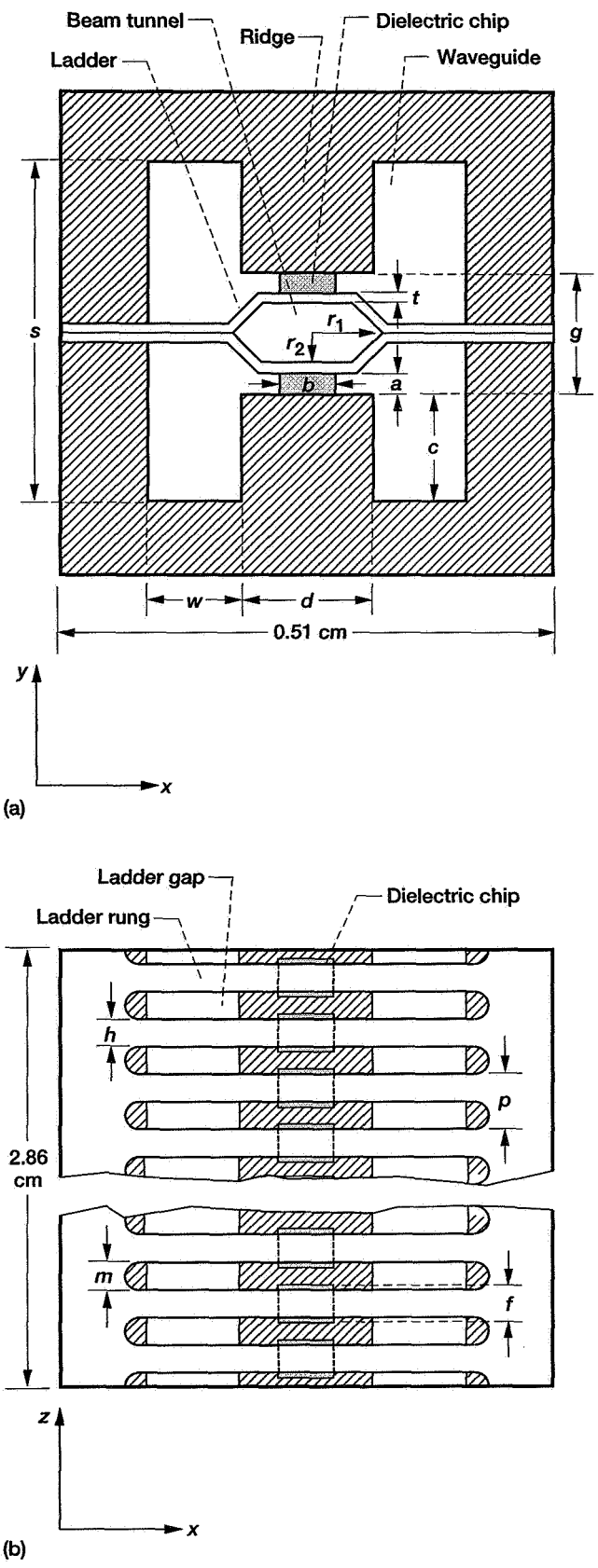

Figure 3.—TunneLadder circuit (see table II). (a) End view. (b) Top view.

TABLE II. —DIMENSIONS OF VARIAN TUNNELADDER TWT CIRCUIT
[See fig. 3. All dimensions in millimeters.]

Dielectric height, a	0.2540
Dielectric width, b	0.3810
Dielectric length, f	0.2032
Ridge height, c	1.0160
Ridge width, d	1.9050
Waveguide gap, g	1.2446
Ladder length, h	0.1524
Ladder thickness, t	0.0635
Gap length, m	0.1651
Period, p	0.3175
Tunnel primary radius, r_1	0.4300
Tunnel secondary radius, r_2	0.3048
Side section height, s	3.2766
Side section width, w	0.8890

ouput section (ref. 6). Despite these problems, the experimental results confirmed the high gain per length, high interaction efficiency, and narrow bandwidth characteristics predicted for the TunneLadder circuit.

MAFIA Code

Input files from the four MAFIA modules used are given in appendixes B to I. The input files of appendixes B to E contain the full command terms, and the input files of appendixes F to I contain some abbreviated command terms that illustrate MAFIA's ability to recognize truncated commands. The interpretation of these abbreviations will be obvious to the user.

M, the Mesh Generator

The first step in simulating the dispersion, the beam on-axis interaction impedance, and the attenuation of a circuit is to model the structure using M, the mesh generator module of MAFIA. In this demonstration, a mesh was created for both circuits with the lines of the mesh as equally spaced as possible. The ratio of the largest to the smallest mesh size must not be too large because convergence problems may occur.

Both circuits were modeled with the grid boundaries matching the major geometrical features. Appendixes B and F show the generalized M module input files for the coupled-cavity and the TunneLadder circuits, respectively. In the #general section, the *scale* command is used to scale the input dimensions to the actual size of the structure. The *define* command is used to assign the dimensions of the various circuit attributes to variable names that are used throughout the input files.

The circuits are modeled by using the various sections available in the M module of the MAFIA code: that is, #ccylinder, #brick, #washer, and #ecylinder. Each material used is given a number. Later, the physical properties of these materials are defined in the R module.

To view a structure's geometries, the user can open a virtual graphics workstation within the M module and create a two- or

three-dimensional plot. Such plots allow the user to examine the structure at any cut or angle, verifying that it is properly modeled. The plots are created in the #2dplot, #3dplot, and #volumeplot sections of M. Before the mesh generator information is passed to the other modules of MAFIA, it must be stored in a **mafia** file. Along with all other file handling, this task is performed in the #file section.

In addition to the **mafia** file type, MAFIA recognizes **log**, **command**, and **print** files. The files listed in appendixes B to I are **command** files, which have a .com extension. These files pass input directly to MAFIA, providing an alternative to keyboard input. The two file types that are opened in the command files of appendixes B to I are the **mafia** and **print** types, which have .drc and .prn extensions, respectively. The **mafia** files are direct-access files where the calculations are stored, and the **print** files are optional files that can contain the output, making it possible for the user to examine the run simulation results, including any errors that have occurred. For example, the command at the head of appendix B,

#file name=fer2m action=open type=print status=unknown execute

opens a file named fer2m.prn that contains the output information from the mesh generator. (The equal signs are included here for clarity, but can be omitted in the input files.) The file section is opened again later in appendix B with

#file name=fer2 action=open type=mafia status=unknown execute

This command opens fer2.drc, a **mafia** file that stores the data necessary for the other modules of MAFIA. Placing an *end* command at the end of an input file terminates the session and saves all important data to the allocated **mafia** file. This file is opened in each successive module and accumulatively stored with data.

R, the Matrix Generator for E

Module R is used to generate the matrix for calculating the eigenmodes in E. The R input files for each of the circuits are listed in appendixes C and G. Initially, the #file section must be used to open the **mafia** file that was written by M. If this **mafia** file is opened with the same name in all modules, intermediate results will accumulate within the file, saving time and space because the file will not have to be named and renamed in each module.

In the #material section, material properties are defined for each material number used in the M module. The numbers 0 and 1 are defined as a vacuum and a perfect conductor, respectively, in both of the R input files (appendixes C and G). Material 2 of the TunneLadder geometry is defined as diamond with a dielectric constant of 5.5 (appendix G). This material is used for the dielectric chips that support the quasi-elliptical beam tunnel of the circuit.

The #boundary section is used to define the boundary conditions at the mesh boundaries. A boundary can be set as an electric or magnetic wall or as periodic. An electric wall is a boundary that simulates a perfect conductor with the electric field perpendicular to the wall. At a magnetic wall boundary, the tangential magnetic field is zero and the magnetic field is perpendicular to the wall.

Setting the boundary to be periodic activates the quasi-periodic boundary condition of MAFIA, which defines a fixed-phase advance for a uniform periodic structure. There are several benefits associated with the quasi-periodic boundary condition. First, the dispersion diagram can be generated from a model of a single axial period of the structure. Because only one period is modeled, the mesh can have a finer resolution. (Because of its alternating coupling slots, the ferruled coupled-cavity circuit has a period that is two cavities long.) In addition, many points can be calculated on the dispersion diagram, allowing for a high degree of accuracy in the frequency versus phase advance relationship and, consequently, in the group velocity.

After the materials and boundary conditions have been defined, the #matrix section of R is used to generate the system matrix of the eigenvalue problem.

E, the Eigenmode Solver

The #file section must be used again to open the **mafia** (.drc) file containing the M and R module data (appendixes D and H). It is also necessary to open a **print** (.prn) file to examine the results of E, because this is where the eigenmode information will be listed. Information is then entered in the #solver section. Here the number of modes desired can be specified, as well as the accuracy, frequency estimate, number of iterations, and other parameters. Once the execute command is given in this section, MAFIA begins to calculate the requested eigenmode information.

P, the Postprocessor

The postprocessor module of MAFIA, P, is interconnected with all the MAFIA modules (fig. 1). The #file section is used to open the **mafia** file that contains the results stored from the other modules (appendixes E and I). The postprocessor reads these results and can both display them graphically and perform secondary calculations. Secondary calculations include field energy and power loss, which are parameters used to calculate the beam on-axis impedance and attenuation.

Analysis

Dispersion Simulation

The frequency-phase dispersion characteristics of the slow-wave circuits were obtained by using the quasi-periodic boundary condition of MAFIA. This feature of the code allows the user to choose a fixed-phase advance per circuit cavity in the direction of periodicity. This parameter is defined in R, the matrix generator for E, as **zphase** (see appendixes C and G), and the resonant frequencies for the given phase condition are calculated with E, the eigenmode solver. Because the phase advance can be set to any value and the corresponding resonant frequencies for this phase shift per cavity will be calculated, an exceptionally accurate dispersion curve can be formed. This is critical in calculating the group velocity with dependable precision.

Experimentally, the frequency-phase dispersion characteristics are calculated by measuring the resonant frequencies in a truncated circuit section. The resonances correspond to standing waves, such that there are an integral number of half wavelengths (phase shifts of π) in the circuit length. No resonance is seen at 180° because the field pattern is shorted out by the shorting planes at the ends (ref. 10).

Impedance Simulation

The beam on-axis interaction impedance for the nth RF space harmonic (ref. 11) is defined as

$$K_n = \frac{E_n^2}{2\beta_n^2 P_{RF}} \tag{1}$$

where E_n is the beam on-axis electric field magnitude of the nth space harmonic, and β_n is the axial phase constant of the nth space harmonic defined by

$$\beta_n = \frac{\phi + 2\pi n}{L} \tag{2}$$

where ϕ is the phase shift per cavity in radians of the fundamental space harmonic, n is the space harmonic order, and L is the length of one cavity. P_{RF} is the time-averaged RF power flow defined by

$$P_{RF} = W v_g \tag{3}$$

where v_g is the group velocity and W is the time-averaged stored electromagnetic energy per unit length,

$$W = \frac{W_T}{NL} \tag{4}$$

with W_T the total energy in N cavities.

In the ferruled coupled-cavity TWT circuit, the beam is synchronous with only the first RF space harmonic. In the TunneLadder slow-wave circuit, the beam is synchronous with only the fundamental RF space harmonic. Thus in equation (1), we need to calculate only the first (n = 1) and the fundamental (n = 0) space harmonic terms for the ferruled coupled-cavity and TunneLadder circuits, respectively.

Calculating the beam on-axis interaction impedance with MAFIA is similar to experimental methods where frequency-phase dispersion characteristics are determined by measuring the resonant frequencies in a section of circuit that is shorted at both ends. Truncating the walls with either an electric or magnetic wall in MAFIA simulates standing waves in the length of the circuit. Table III lists the cavity configurations and boundary conditions required to obtain several resonant frequencies of the first forward RF space harmonic of the cavity mode (for the ferruled circuit) and of the fundamental RF space harmonic of the symmetric ladder mode (for the TunneLadder circuit). For each combination of cavity configuration and boundary conditions, the phase shifts per cavity for the resulting resonant frequencies are listed in the order of increasing frequency for the ferruled circuit, with the corresponding phase shifts for the TunneLadder circuit listed in the adjacent column.

TABLE III. —BOUNDARY CONDITIONS FOR RESONANCE AT VARIOUS PHASE SHIFTS PER CAVITY

Cavities	Boundary conditions	Phase shift per cavity, βL, deg	
		Ferruled circuit	TunneLadder circuit
2	magnetic electric	225, 315	45, 135
3	magnetic electric	210, 270, 330	30, 90, 150
3	electric electric	240, 300	60, 120

To determine the electric field space harmonic magnitude, E_1 or E_0, we perform a Fourier analysis (ref. 12) on the total on-axis axial electric field E_{ztot}. E_{ztot} can be printed through the P module in the #print section. The effective field as seen by the electron beam is the peak value of the particular space harmonic with which the beam is synchronous. For a traveling wave, this value E_n is half that calculated with MAFIA for a standing wave E_{nS} (ref. 13), so the value needed for equation (1) is

$$E_n = \frac{1}{2} E_{nS} \tag{5}$$

To obtain W_T for equation (4), we use the #energy section of the P module to calculate the total time-averaged electromagnetic field energy for a standing wave W_S. The commands are listed in appendixes E and I. The total energy for a traveling wave is half that calculated for a standing wave (see appendix J), so the total energy of equation (4) is

$$W_T = \frac{1}{2} W_S \tag{6}$$

Therefore, the total electromagnetic energy per unit length for a traveling wave W is

$$W = \frac{1}{2} \frac{W_S}{NL} \tag{7}$$

and the total RF power flow can be defined as

$$P_{RF} = \frac{1}{2} \frac{W_S}{NL} v_g \tag{8}$$

The group velocity of equation (3) is defined as

$$v_g = \frac{\partial \omega}{\partial \beta_n} \tag{9}$$

and is extracted from the dispersion curve, which is plotted with frequency f (in hertz) versus phase shift per cavity βL (in radians). Using these parameters yields v_g expressed as

$$v_g = 2\pi L \frac{\partial f}{\partial(\beta_n L)} \tag{10}$$

Thus, the beam on-axis interaction impedance calculated with MAFIA can be expressed as

$$K_n = \frac{E_{nS}^2 NL}{4\beta_n^2 W_S v_g} \tag{11}$$

Attenuation Simulation

The circuit attenuation is calculated by using the same truncation method used for the impedance simulations. Table III lists the values of phase shift per cavity for which this attenuation is calculated. The attenuation of a cavity is defined in decibels per unit length as (ref. 14)

$$\alpha = 8.686 \frac{P_L}{2P_{RF}} \tag{12}$$

where P_L is the total power loss per unit length

$$P_L = \frac{P_{LT}}{NL} \tag{13}$$

and P_{LT} is the total power loss for a traveling wave in N cavities. The postprocessor input files (appendixes E and I) contain the information needed to calculate the attenuation with MAFIA. The total time-averaged electromagnetic energy for a standing wave W_S is calculated as before in the #energy section of P, and the total power loss for a standing wave P_{LS} is usually calculated in the #losses section. The total power loss for a traveling wave is half that calculated for a standing wave (see appendix J):

$$P_{LT} = \frac{1}{2} P_{LS} \tag{14}$$

Therefore, the attenuation in decibels per unit length can be expressed as

$$\alpha = 4.343 \frac{P_{LS}}{W_S v_g} \tag{15}$$

and the attenuation in decibels per cavity can be expressed as

$$\alpha = 4.343 \frac{P_{LS} L}{W_S v_g} \tag{16}$$

For the loss calculations, the conductivity must be supplied in the #material section (see appendixes E and I). Also, for the case of a dielectric material (such as the diamond chips in the TunneLadder circuit), the loss tangent of the material must be defined in the #material section and the power losses for this material will be calculated in the #energy section.

Results

The ferruled coupled-cavity slow-wave circuit of the Hughes 961HA TWT and the TunneLadder slow-wave circuit of the Varian TWT were both modeled in the Cartesian coordinate system. The results from these simulations were then compared with experimental results.

Ferruled Coupled-Cavity Circuit

Dispersion simulations.—A MAFIA grid with a cell resolution of 43 by 43 in the transverse plane and of 17 cells per cavity in the longitudinal direction was generated for the ferruled coupled-cavity circuit. The lines of the mesh were spaced as equally as possible with grid boundaries matching major geometrical features such as the beam hole and ferrules.

Compared with the experimental data provided by Hughes (A.L. Rousseau, 1988, Hughes Aircraft Co., Torrence, California, personal communication), the MAFIA results are consistently lower by an average of 1.11 percent for the cavity mode and of 0.90 percent for the slot mode. Increasing the resolution of the grid to 53 by 53 by 29 reduced the cavity mode frequency difference slightly, but again gave consistently lower values by an average of 0.86 percent for the cavity mode and of 0.92 percent for the slot mode. Figures 4(a) and (b), respectively, show the end and top views of the MAFIA high-resolution grid. The resonant frequencies obtained for the higher resolution grid are compared with fitted experimental data for the cavity and slot modes in tables IV and V, respectively, and in figure 5.

Impedance simulations.—The beam on-axis interaction impedance for the first forward space harmonic of the ferruled coupled-cavity circuit was calculated from equation (11). Figure 6 and table VI show that the impedance values match the experimental results very well with an average absolute difference of 3.77 percent for a phase shift per cavity βL between 210° and 315°. The large difference between the MAFIA results and the experiment for a phase shift of 330° per cavity is atypical of the rest of the impedance results (see table VI). This may be due to some error in determining the group velocity where the dispersion curve starts to flatten.

Figure 7 shows a three-dimensional cutaway of two cavities of the ferruled coupled-cavity circuit. The electric field is shown at a phase shift of 225° per cavity, with the size of the arrows proportional to the magnitude of the field.

Attenuation simulations.—The necessary input for the attenuation calculations includes a conductivity value for the conducting materials. Since actual losses in a circuit are consistently greater than the theoretically predicted values because of macroscopic surface roughness, work hardening due to machining, oxidation, and cavity-type surface irregularities (ref. 15), an effective conductivity value was used. This effective value of conductivity (1.9×10^7 S/m (siemens per meter)) is that for which the MAFIA-simulated attenuation per cavity at 61.5 GHz matches the attenuation as estimated by Hughes (A.L. Rousseau, 1988, Hughes Aircraft Co., Torrence, California, personal communication), (0.036 dB/cavity) for the 961HA ferruled coupled-cavity TWT slow-wave circuit. The estimated attenuation was given for three frequencies: 59.0, 61.5, and 64.0 GHz. For this frequency band, figure 8 compares simulated results using the theoretical conductivity of copper, 5.8×10^7 S/m, and using the effective value obtained with MAFIA, 1.9×10^7 S/m, with the estimated results.

Figure 9 shows a three-dimensional cutout of the contour plot of the ferruled coupled-cavity circuit loss. The area of highest intensity is represented by the red shading, the lowest by blue. This plot indicates that most of the losses are concentrated at the slot.

TunneLadder Circuit

Dispersion simulations.—The TunneLadder TWT slow-wave circuit was modeled using MAFIA with a grid cell resolution of 55 by 59 in the transverse plane and of 15 cells per cavity in the longitudinal direction. Similar to the ferruled circuit, the lines of the mesh were matched with major geometrical features. Figures 10(a) and (b) show the end and top views, respectively, of the mesh generated by MAFIA.

The MAFIA results for the dispersion relationship are very close to experimental data with an absolute average frequency difference of 0.31 percent for the symmetric ladder mode (see fig. 11 and table VII). The MAFIA results proved to be better than those from a similar study that used a different three-dimensional electromagnetic computer code (ref. 16). Experimental data for other modes of the circuit were not available.

Impedance and attenuation simulations.—Experimental data for the beam on-axis interaction impedance and the circuit attenuation of the TunneLadder circuit of reference 6 were not available for comparison with the MAFIA-simulated results. However, the MAFIA results for the beam on-axis interaction impedance follow the same trend as the experimental impedance for a similar TunneLadder circuit (ref. 9). The impedance rises to a peak value around a phase shift per cavity of 60° and decreases with increasing phase shift (see fig. 12). Figure 13 shows a MAFIA three-dimensional electric field plot of the TunneLadder circuit at a phase shift of 45° per cavity. The field is large near the diamond dielectric chips (represented by navy blue). The placement of the dielectric chips contributes to the high axial electric field in the center of the beam hole and, thus, to the high impedance of the circuit.

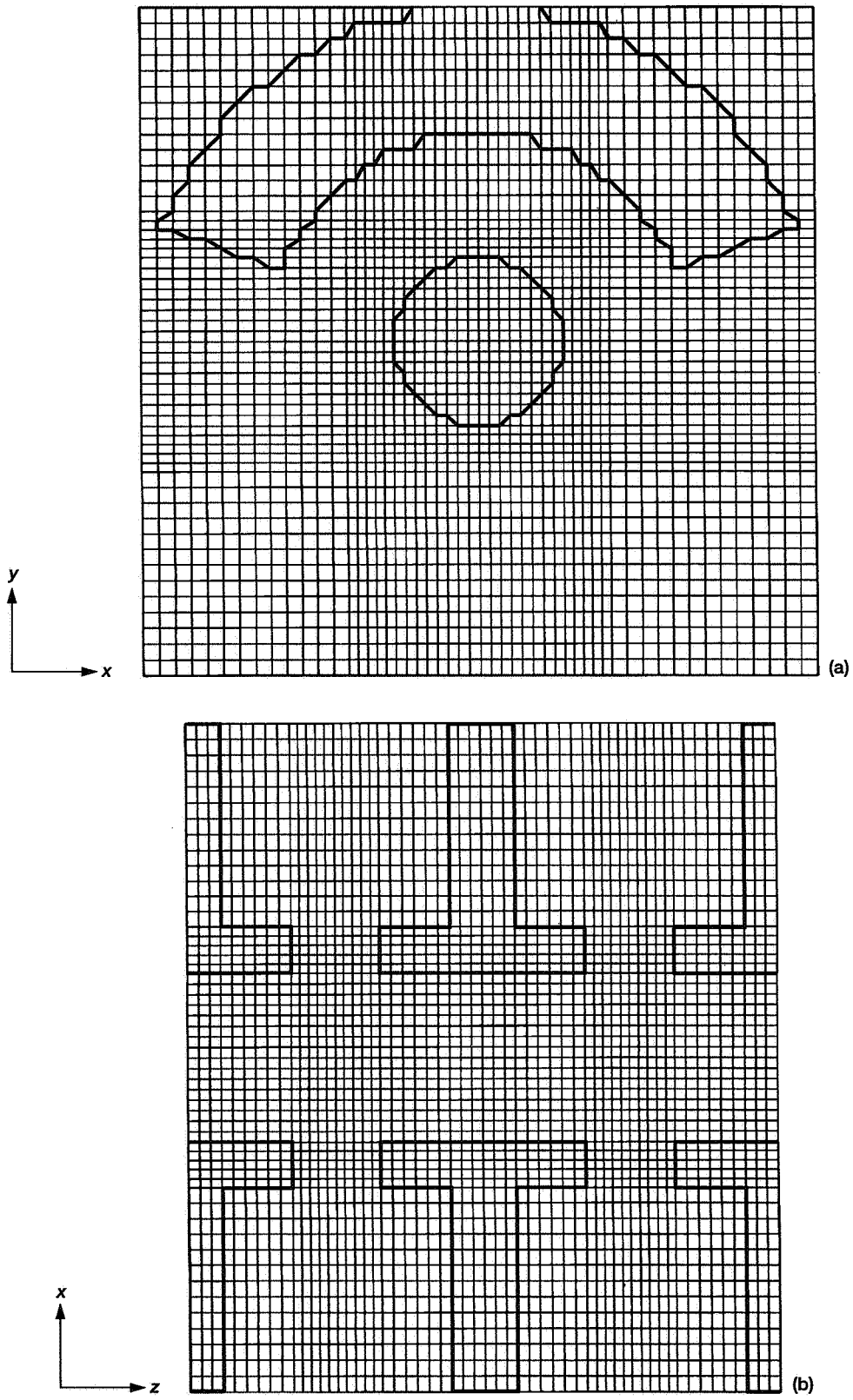

Figure 4.—MAFIA grid for Hughes 961HA ferruled coupled-cavity TWT circuit (ref. 4). (a) End view. (b) Top view.

TABLE IV. —CAVITY MODE RESONANT FREQUENCIES FOR FERRULED COUPLED-CAVITY TWT CIRCUIT

Phase shift per cavity, βL, deg	Fitted experimental frequency, f, GHz	MAFIA frequency, f, GHz	Frequency difference, Δf, percent
180	-----	52.87	------
210	54.34	53.83	-0.94
225	55.53	55.00	-.95
240	57.13	56.59	-.95
270	61.36	60.82	-.88
300	66.6	66.07	-.80
315	69.41	68.87	-.78
330	72.12	71.59	-.73
360	75.47	74.86	-.81

TABLE V. —SLOT MODE RESONANT FREQUENCIES FOR FERRULED COUPLED-CAVITY TWT CIRCUIT

Phase shift per cavity, βL, deg	Fitted experimental frequency, f, GHz	MAFIA frequency, f, GHz	Frequency difference, Δf, percent
180	------	113.12	-----
210	112.69	111.60	-0.97
225	110.91	109.84	-.96
240	108.64	107.57	-.98
270	102.97	101.98	-.96
300	96.47	95.66	-.84
315	93.26	92.48	-.84
330	90.31	89.49	-.91
360	------	86.01	-----

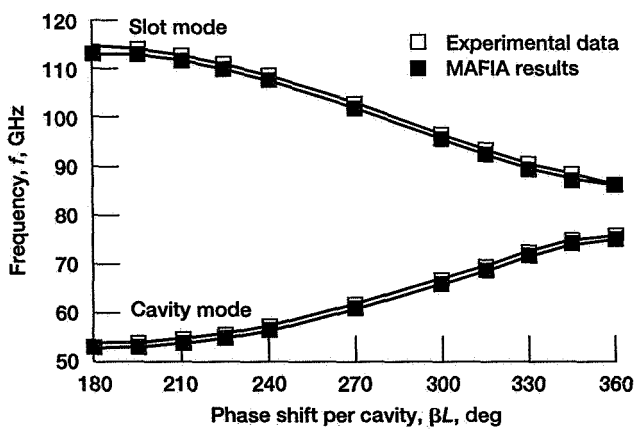

Figure 5.—Experimental data and MAFIA simulation of dispersion for cavity and slot modes of Hughes 961HA TWT.

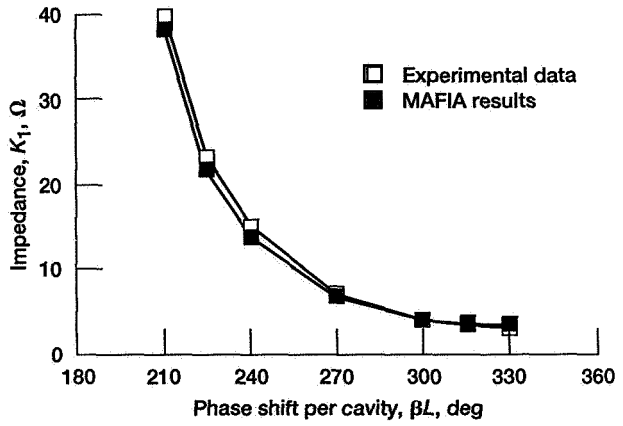

Figure 6.—Experimental data and MAFIA simulations of beam on-axis interaction impedance for Hughes 961HA TWT.

TABLE VI. —BEAM ON-AXIS INTERACTION IMPEDANCE FOR FERRULED COUPLED-CAVITY TWT CIRCUIT

Phase shift per cavity, βL, deg	Fitted experimental impedance, K_1, Ω	MAFIA impedance, K_1, Ω	Impedance difference, ΔK_1, percent
210	39.77	38.27	-3.77
225	23.27	21.59	-7.22
240	14.69	13.89	-5.45
270	7.08	6.94	-1.98
300	4.20	4.17	-.71
315	3.46	3.58	3.47
330	2.96	3.50	18.24

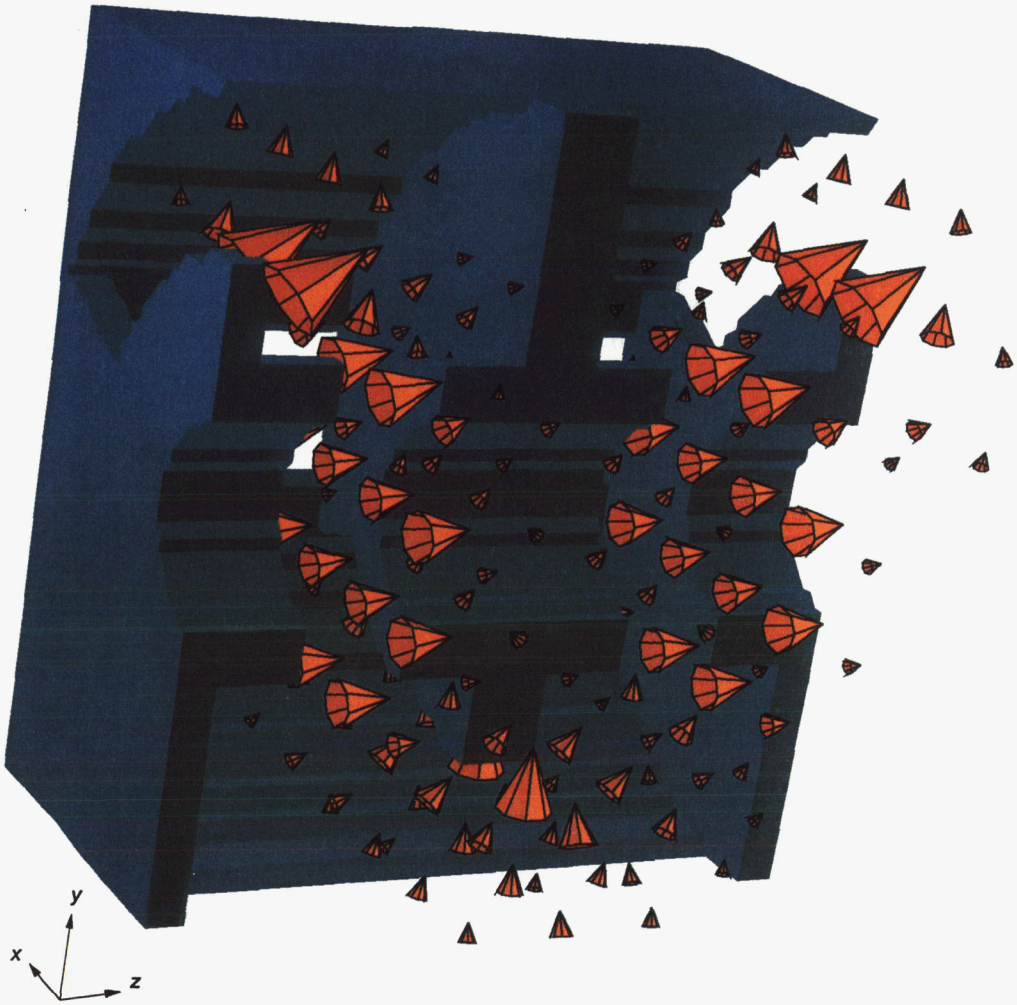

Figure 7.—MAFIA three-dimensional electric field plot for Hughes 961HA ferruled coupled-cavity TWT circuit. Size of three-dimensional arrows is proportional to magnitude of the field. Phase shift per cavity, βL, 225°.

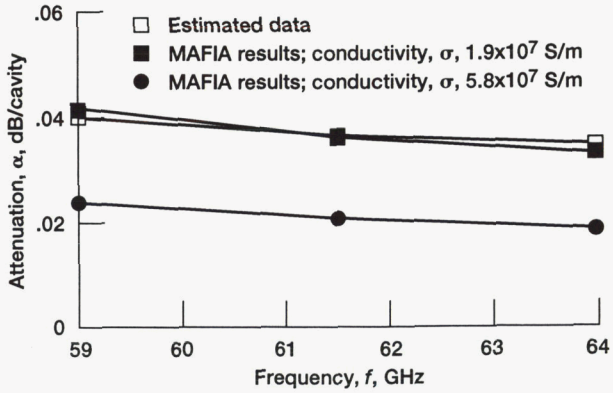

Figure 8.—Estimated data and MAFIA simulations of circuit attenuation for Hughes 961HA TWT.

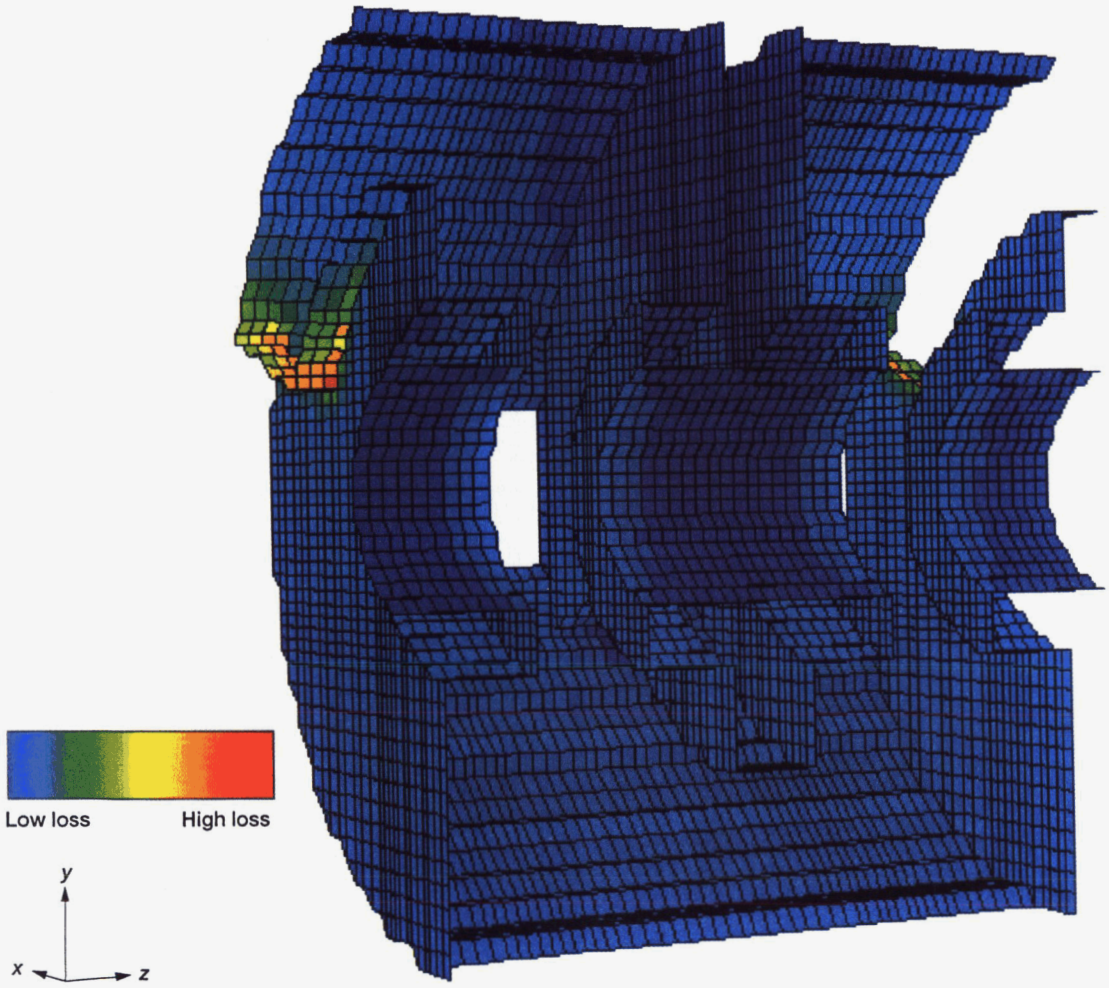

Figure 9.—MAFIA three-dimensional contour plot of losses for Hughes 961HA ferruled coupled-cavity TWT circuit.

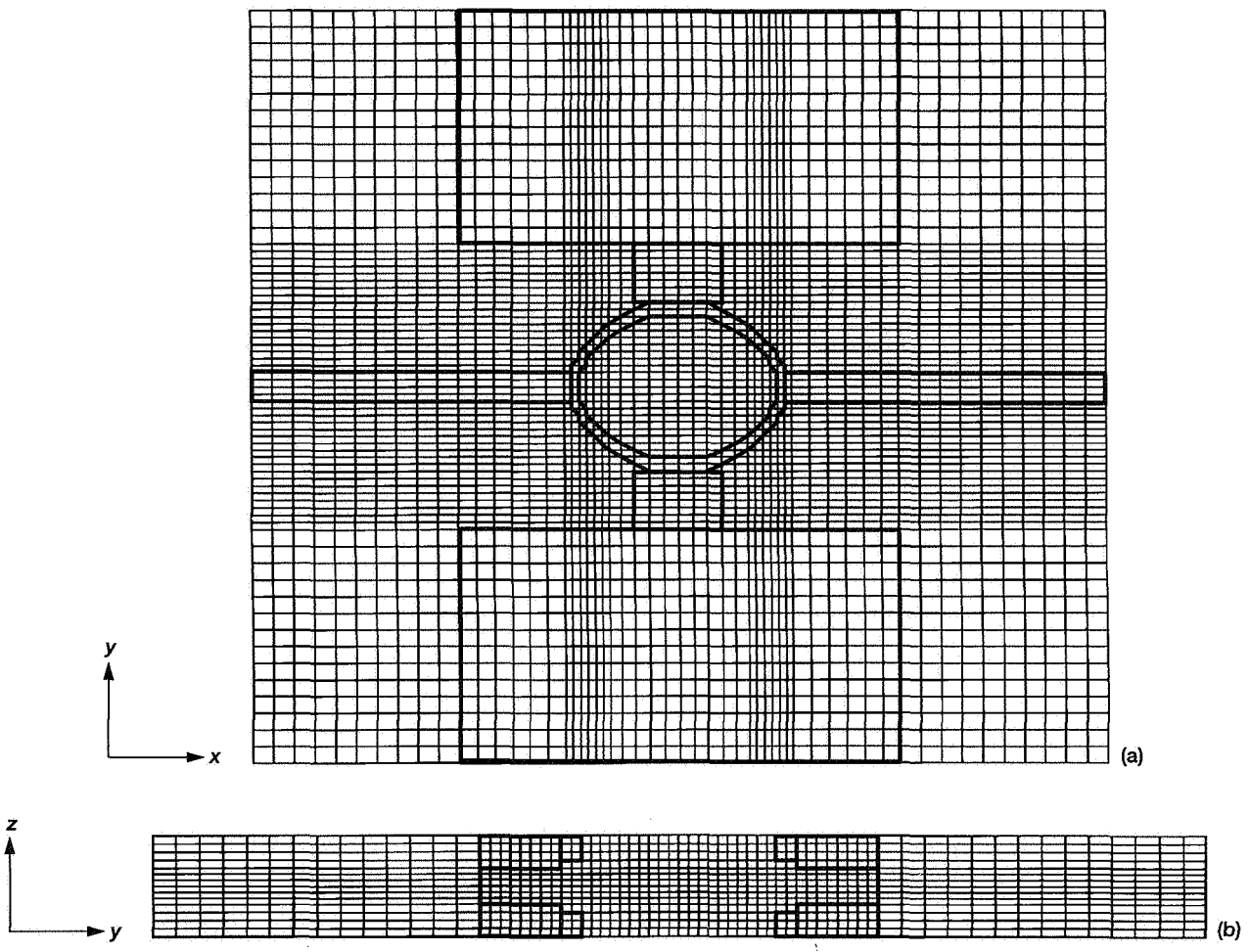

Figure 10.—MAFIA grid for Varian TunneLadder TWT circuit. (a) End view. (b) Top view.

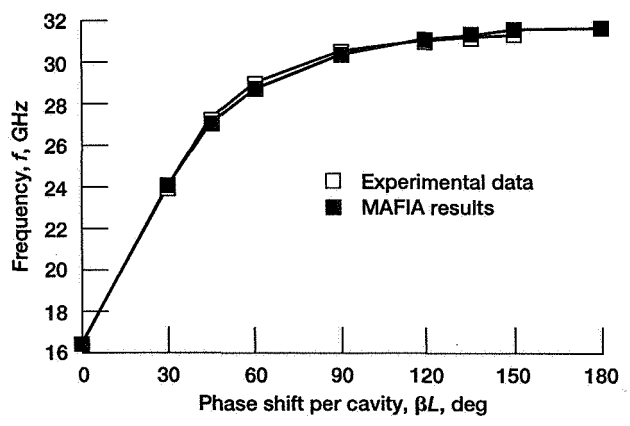

Figure 11.—Experimental data and MAFIA simulation of dispersion for symmetric ladder mode of the Varian TunneLadder TWT.

TABLE VII. —SYMMETRIC LADDER MODE RESONANT FREQUENCIES FOR TUNNELADDER CIRCUIT

Phase shift per cavity, βL, deg	Fitted experimental frequency, f, GHz	MAFIA frequency, f, GHz	Frequency difference, Δf, percent
0	-----	16.38	-----
30	24.15	24.14	-0.04
45	27.22	27.08	-.51
60	28.93	28.81	-.41
90	30.54	30.50	-.13
120	31.16	31.21	.16
135	31.30	31.41	.35
150	31.37	31.54	.54
180	-----	31.63	-----

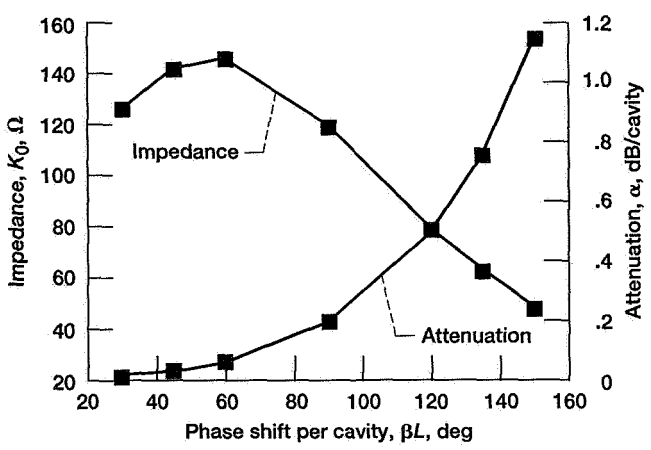

Figure 12.—MAFIA simulations of beam on-axis interaction impedance and circuit attenuation for Varian TunneLadder TWT.

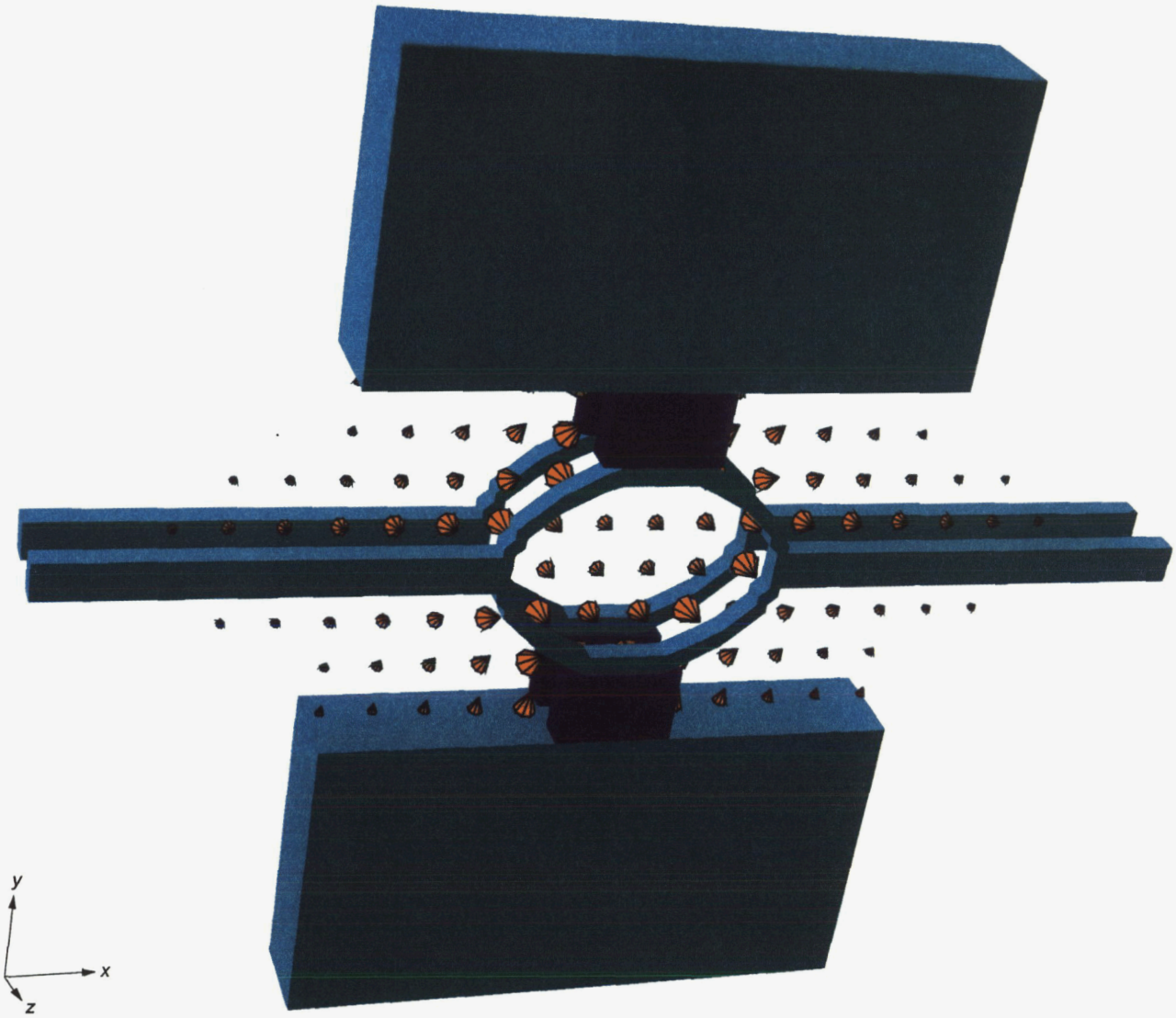

Figure 13.—MAFIA three-dimensional electric field plot for Varian TunneLadder TWT circuit. Size of three-dimensional arrows is proportional to magnitude of the field. Phase shift per cavity, βL, 45°.

The circuit attenuation for the TunneLadder circuit (also shown in fig. 12) was calculated by using the effective conductivity value (1.9×10^7 S/m) obtained by matching the ferruled coupled-cavity simulated attenuation results with those estimated from the experiment. The MAFIA results indicate an increase of circuit attenuation with increasing phase shift. Figure 14 shows a MAFIA three-dimensional contour plot of the TunneLadder circuit loss. The losses are concentrated at the slots.

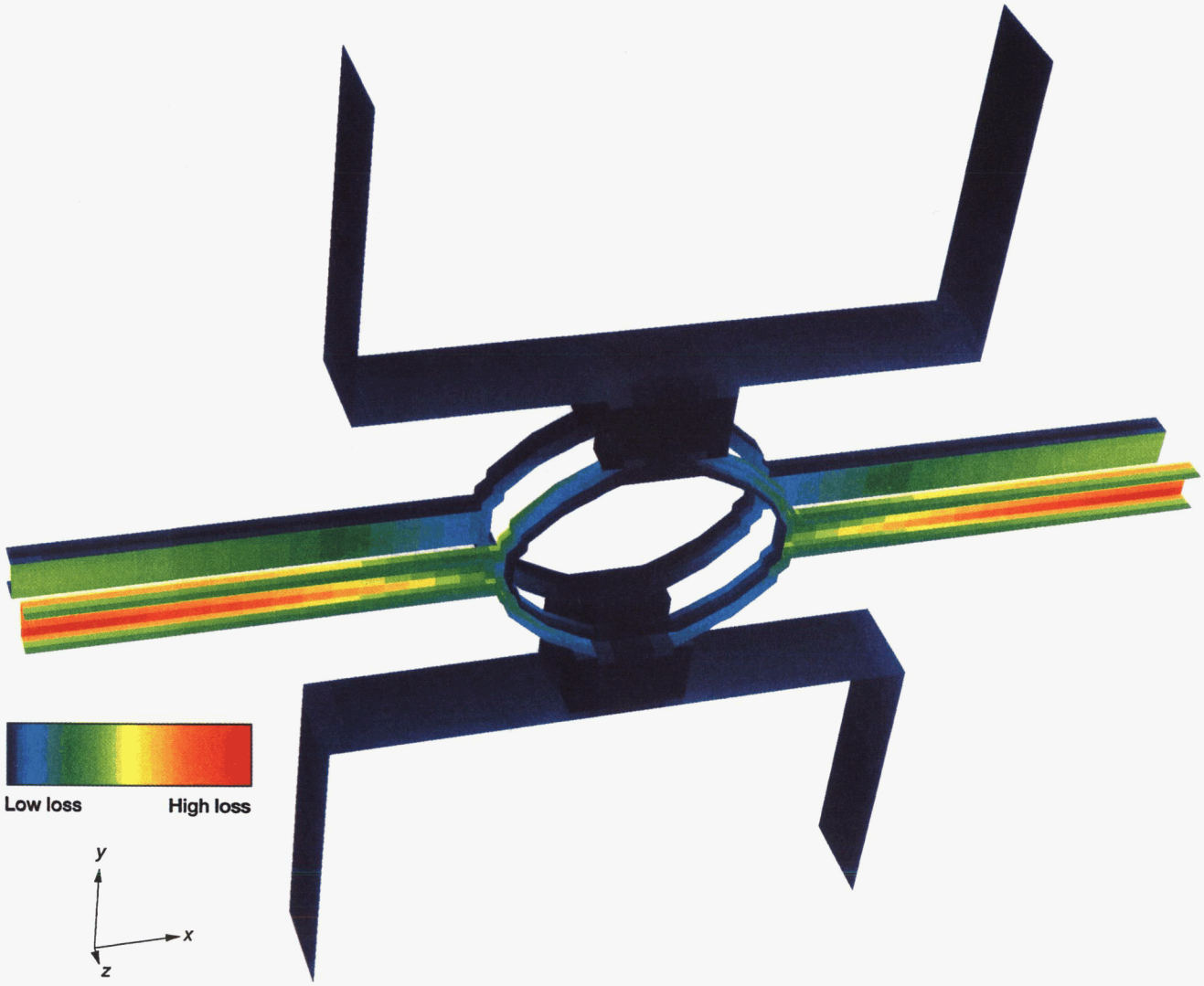

Figure 14.—MAFIA three-dimensional contour plot of losses for Varian TunneLadder TWT circuit.

Conclusions

Generalized MAFIA input files were developed for coupled-cavity and TunneLadder traveling-wave tube (TWT) circuits. However, arbitrary circuit dimensions could be modeled by simply changing the dimensions in these files.

The generalized input files were used to simulate the cold-test parameters (i.e., frequency-phase dispersion, beam on-axis interaction impedance, and circuit attenuation) of two specific circuits: the Hughes 961HA ferruled coupled-cavity and the Varian TunneLadder TWT circuits. For the dispersion calculations, the agreement with experimental results is very good for the operating modes of both circuits, with an average frequency difference of 0.9 percent for the ferruled coupled-cavity circuit and of 0.3 percent for the TunneLadder circuit. The beam on-axis interaction impedance calculated for the ferruled circuit also shows good agreement, with a typical absolute average difference of about 4 percent. When an effective value for the conductivity of copper was used in the ferruled coupled-cavity attenuation calculations, the MAFIA results were very close to the estimated results. This effective conductivity, 1.9×10^7 S/m, was used to account for the actual losses in the circuit, which are consistently greater than the theoretically predicted values because of surface irregularities. These results demonstrate the reliability of MAFIA simulations and their ability to reduce expensive and time-consuming experimental procedures in the TWT design process.

Lewis Research Center
National Aeronautics and Space Administration
Cleveland, Ohio, December 21, 1994

Appendix A
Symbols

A_n	electric field amplitude of nth space harmonic
E_n	on-axis axial electric field space harmonic magnitude of a traveling wave
E_{nS}	on-axis axial electric field space harmonic magnitude of a standing wave
E_{ztot}	total on-axis axial electric field
f	frequency
H_t	magnetic field component tangential to the circuit walls
K_n	beam on-axis interaction impedance for n^{th} space harmonic
L	cavity length
N	number of cavities in simulation
n	space harmonic order
P_L	total RF power loss per unit length
P_{LT}	total RF power loss of a traveling wave
P_{LS}	total RF power loss of a standing wave
P_{RF}	RF power flow
p	period
v_g	group velocity
W	electromagnetic energy of a traveling wave per unit length
W_T	total electromagnetic energy of a traveling wave
W_S	total electromagnetic energy of a standing wave
z	axial coordinate
α	attenuation of a cavity
β_n	axial phase constant for n^{th} space harmonic
δ	skin depth
ε	permittivity
η	intrinsic impedance of the media
θ	slot arc
σ	conductivity
ϕ	phase shift per cavity for fundamental space harmonic (in radians)
ω	angular frequency, $2\pi f$

Appendix B
MAFIA Mesh Generator File for Ferruled Circuit
(M Module Input File)

```
$**********************************************
$ MAFIA mesh generator file for the ferruled circuit
$**********************************************
! rm -f fer2.drc
! rm -f fer2m.prn

$**********************************************
$ Open an output file to view the results of m310
$**********************************************
#file name fer2m action open type print status unknown execute

#general   text(1) 'Ferruled 961ha cctwt circuit, 2 cav'
store noprintscreen nomenu

$**********************************************
$Define variable names and dimensions in 0.0001 m:
$**********************************************
scale 0.0001

$Ferrule inner radius, r1
define rbeam = 2.794

$Ferrule outer radius, r2
define rfer = 4.318

$Slot inner radius, r3
define rpatc = 6.858

$Slot outer radius, r4
define rslot = 11.049

$Cavity radius, r5
define rcav = 11.049

$Cavity gap, h
define cavsp = 7.518

$Ferrule gap, g
define gap = 2.921

$Wall thickness, t
define wallth = 2.159

$Cavity length, L
define per = 9.6774

$Slot arc, theta, in degrees
define slota 140.0

$**********************************************
$ Define the mesh dimensions and spacings
$**********************************************
define xreg1 16
define xreg2 5
define xreg3 5
define xreg4 8
$
define yreg1 16
define yreg2 5
define yreg3 5
define yreg4 8
$
define zreg1 6
define zreg2 6
define zreg3 10
define zreg4 6
define zreg5 3
$
define xdim1 rbeam
define xdim2 rfer
define xdim3 rpatc
define xmax rcav
$
define ydim1 rbeam
define ydim2 rfer
define ydim3 rpatc
define ymax rcav
$
define zdim1 "wallth/2.0"
define zdim2 "(per - gap)/2.0"
define zdim3 "zdim2 + gap"
define zdim4 "per - zdim1"
define zmax per
$
#mesh   xmesh "-ymax" s yreg4 "-ydim3" s yreg3 "-ydim2"
        s yreg2 "-ydim1" s "yreg1/2" 0.0 s "yreg1/2"
        ydim1 s yreg2 ydim2 s yreg3 ydim3 s yreg4 ymax
  ymesh "-ymax" s yreg4 "-ydim3" s yreg3 "-ydim2"
        s yreg2 "-ydim1" s "yreg1/2" 0.0 s "yreg1/2"
        ydim1 s yreg2 ydim2 s yreg3 ydim3 s yreg4 ymax
  z mesh "-zmax" s zreg5 "-zdim4" s zreg4 "-zdim3" s zreg3 "-zdim2"
        s zreg2 "-zdim1" s zreg1 zdim1 s zreg2
        zdim2 s zreg3 zdim3 s zreg4 zdim4 s zreg5 zmax
    show
    execute

$**********************************************
$ Form the geometrical attributes of the ferruled circuit
$**********************************************
#brick
  material 1
  volume "-xmax" xmax "-ymax" ymax "-zmax" zmax
  execute
$ Hollow a cylinder the length of the period
```

```
#ccylinder
  material 0
  part full
  center 0.0 0.0
  orientation z
  radius rcav
  range "-zmax" zmax
  execute
$ Form slot1 and slot3 in the partition walls
  material 1
  range "-zmax" "-zdim4" execute
  range "zdim4" zmax execute
  part section point1 0.0 "ymax" angle "slota/2.0"
  material 0
  center 0.0 0.0
  range "-zmax" "-zdim4"
  execute
  range zdim4 zmax execute
  center 0.0 0.0
  part section point1 0.0 "ymax"
  angle "-slota/2.0"
  execute
  range "-zmax" "-zdim4" execute
$ Fill in the patches for slot1 and slot3
  material 1
  center 0.0 0.0
  part section point1 0.0 ydim3
  angle "-slota/2.0"
  execute
  range zdim4 zmax execute
  center 0.0 0.0
  part section point1 0.0 ydim3
  angle "slota/2.0"
  execute
  range "-zmax" "-zdim4" execute
$ Form slot2 180 degrees from slot1 and slot3
define wedge "90 + (90 - slota/2.0)"
  material 1
  center 0.0 0.0
  part section point1 0.0 ymax
  angle wedge
  range "-zdim1" zdim1
  execute
  part section point1 0.0 ymax
  angle "-wedge"
  center 0.0 0.0
  execute
$ Fill in the patch for slot2
  material 1
  center 0.0 0.0
  part section point1 0.0 "-ydim3"
  angle "-slota/2.0"
  execute
  center 0.0 0.0
  part section point1 0.0 "-ydim3"
  angle "slota/2.0"
  execute
$ Form the ferrules
 #washer
  material 1
  center 0.0 0.0
  orientation z
  inner rbeam
  outer rfer
  range "-zmax" "-zdim3"
  part full
  execute
  range "-zdim2" zdim2
  execute
  range zdim3 zmax
  execute
$ Hollow the beam hole
#ccylinder
  center 0.0 0.0
  material 0
  part full
  orientation z
  radius rbeam
  range "-zmax" zmax
  execute

$*****************************************************
$ Open the graphics station and view the geometry
$*****************************************************
 open x
  #2dplot
    material all grid yes izcut 1
    execute
    swi
 #3dplot
  material 1 rotation 0 120 0 cells no ex
 swi
 close x

$*****************************************************
$ Open a mafia file and save the data from m310
$*****************************************************
#file name fer2 action open type mafia status unknown execute
end
```

Appendix C
MAFIA Matrix Generator File for Ferruled Circuit
(R Module Input File)

```
$ ***********************************************
$ MAFIA matrix generator file for the ferruled circuit
$ ***********************************************

noprintscreen

$ ***********************************************
$ Open the mafia file with stored results from m310
$ ***********************************************
#file name fer2 action open type mafia status unknown execute

$ ***********************************************
$ Define the boundary conditions
$ ***********************************************
define phase 225
#boundary
  xboundary electric electric
  yboundary electric electric
  zboundary periodic

$ The desired phase is doubled for two modeled cavities
  zphase "phase*2.0"

$ ***********************************************
$ Define the materials used in m310
$ ***********************************************
#material
  material 1 type electric
  material 0 type normal eps 1
  show

$ ***********************************************
$ Start the matrix generation
$ ***********************************************
#matrix execute

end
```

Appendix D
MAFIA Eigenvalue Solver File for Ferruled Circuit
(E Module Input File)

```
$ ***********************************************
$ MAFIA eigenvalue solver file for the ferruled circuit
$ ***********************************************

noprintscreen

$ ***********************************************
$ Open the mafia file with stored results from m310 and r310
$ Open an output file to view the results
$ ***********************************************

#file name fer2 action open type mafia status unknown execute
    name fer2e type print execute

$ ***********************************************
$ Enter the solver section setting desired parameters
$ ***********************************************
#solver
 accuracy 0.0001
 modes 10
 iterations 3
 execute

printscreen
echo 'zphase ——>' @zphase
show
noprintscreen
end
```

Appendix E
MAFIA Postprocessor File for Ferruled Circuit
(P Module Input File)

```
$ ***************************************************
$ MAFIA postprocessor file for the ferruled circuit
$ ***************************************************

noprintscreen

$ ***************************************************
$ Open the mafia file with stored results from m310, r310, and e310
$ Open an output file to view the results
$ ***************************************************
#file name fer2 type mafia action open status unknown execute
   name printz type print action open status unknown execute

define period 0.96774e-3
$       ^^^^^^^^ set this to the period length in meters

define cavnum 2
$       ^ number of cavities

define evenodd 1
$        ^ odd/total/even synthesis corresponding to -1/0/1
$          This input is used for the Fourier analysis done on Eztot

define vg 3.263998e+7
$    ^^^^^^^^^^ group velocity in meters per second

define phase "225"
$       ^^^^^^^ phase shift per cavity in degrees

define zstart @zmin
$        ^   where the first longitudinal mesh point starts in meters

$ ***************************************************
$ Define the location of symmetry planes
$***************************************************
#general
symmetry no no no no no no
$  ^^^^^^^^^^^^^^^^^ change symmetries accordingly

define cnst 1.9e+7
$       ^^^^^^ this value defines the conductivity in siemens per meter

#material material 1 kappa cnst
       conduct cnst cnst cnst cnst 0 0
$          ^^^^^^^^^^^^^^^^^^^^^^^ the conductivity is defined here
$                              for each boundary

printscreen
```

```
$***************************************************
$ The total energy is calculated
$***************************************************
#energy sym e/1 density yes losses yes execute

$***************************************************
$ The power losses are calculated
$***************************************************
#losses sym b/1 density yes execute

define powloss @metalpower
$          ^^^^^^^^^^^ the power loss is defined as the total losses
$                   calculated at the boundaries and inner surfaces

define atten "(8.686*powloss*period)/(2*@totalenergy*vg)"
    ^^^^^ The circuit attenuation is defined in decibels per cavity

printscreen
echo '%frequency' @frequency
echo '%period' period
echo '%energy' @totalenergy
echo '%powloss' powloss
echo '%atten' atten
echo '%phase' phase
echo '%cavnum' cavnum
echo '%evenodd' evenodd
echo '%vg' vg
echo '%zstart' zstart

$***************************************************
$ The axial electric field is printed
$***************************************************
#print
sym e/1
component z
normal x
ylow 0.0
yhigh @ddminy
$    ^^^^^^^ this value should be the second positive mesh point
$          in the y direction
printscreen
execute
end
```

Appendix F
MAFIA Mesh Generator File for TunneLadder Circuit
(M Module Input File)

```
$ ********************************************
$ MAFIA mesh generator file for the TunneLadder circuit
$ ********************************************

rm -f tl.drc
rm -f tlm.prn

$ ********************************************
$ Open an output file to view the results of m310
$ ********************************************
#file name tlm type pr action open status unknown
  ex
#general
 text(1) 'TunneLadder circuit'

$ ********************************************
$Define variable names and dimensions in 0.0001 m:
$ ********************************************
scale 0.0001

$Dielectric height, a
define diht 2.54

$Dielectric width, b
define diwth 3.81

$Ridge height, c
define ridht 10.16

$Ridge width, d
define ridwth 19.05

$Waveguide gap, g
define wgap 12.446

$Dielectric length, f
define dilgth 2.032

$Ladder length, h
define alad 1.524

$Gap length, m
define zgap 1.651

$Period, p
define period 3.175

$Tunnel primary radius, r1
define radpri 4.3
define radpri2 3.0

$Tunnel secondary radius, r2
define radsec 3.048

$Side section height, s
define sideht 32.766

$Ladder thickness, t
define thick 0.635

$Side section width, w
define sidwth 8.890

$ ********************************************
$ Define the mesh dimensions and spacings
$ ********************************************
define thick2 "thick/2.0"
define xreg1 6
define xreg2 2
define xreg3 4
define xreg4 2
define xreg5 6
define xreg6 10
$
define yreg1 4
define yreg2 8
define yreg3 2
define yreg4 8
define yreg5 14
$
define zreg1 6
define zreg2 1
define zreg3 3
$
define xdim1 "diwth/2.0"
define xdim2 radpri2
define xdim3 radpri
define xdim4 "xdim3 + thick"
define xdim5 "ridwth/2.0"
define xmax "xdim5 + sidwth"
$
define ydim1 thick
define ydim2 radsec
```

```
define ydim3 "wgap/2.0 - diht"
define ydim4 "wgap/2.0"
define ymax "sideht/2.0"
$
define zdim1 "period/2.0 - dilgth/2.0"
define zdim2 "zgap/2.0"
define zmax "period/2.0"
$
#mesh xmesh "-xmax" s xreg6 "-xdim5" s xreg5 "-xdim4" s xreg4 "-xdim3"
        s xreg3 "-xdim2" s xreg2 "-xdim1" s xreg1
        xdim1 s xreg2 xdim2 s xreg3 xdim3 s xreg4 xdim4 s xreg5
        xdim5 s xreg6 xmax

  ymesh "-ymax" s yreg5 "-ydim4" s yreg4 "-ydim3" s yreg3 "-ydim2"
        s yreg2 "-ydim1" s yreg1
         ydim1 s yreg2 ydim2 s yreg3 ydim3 s yreg4 ydim4 s yreg5 ymax

  zmesh "-zmax" s zreg3 "-zdim2" s zreg2 "-zdim1" s zreg1 zdim1 s zreg2
        zdim2 s zreg3 zmax
    ex
show

$ ***********************************************
$ Form the geometrical attributes of the TunneLadder circuit
$ ***********************************************
$ Hollow out a space and form the ridge
#brick
    material 0
    vol "-xmax" xmax "-ymax" ymax "-zmax" zmax
    ex
    mat 1
    vol "-xdim5" xdim5 "-ymax" "-ydim4" "-zmax" zmax
    ex
    mat 1
    vol "-xdim5" xdim5 ydim4 ymax "-zmax" zmax
    ex
$ Form the ladder
    mat 1
    vol "-xmax" xmax "-ydim1" ydim1 "-zmax" zmax
    ex
$ Form the dielectric chips
    mat 2
    vol "-xdim1" xdim1 "-ydim4" "-ydim3" "-zmax" "-zdim1"
    ex
    vol "-xdim1" xdim1 "ydim3" "ydim4" "-zmax" "-zdim1"
    ex
    vol "-xdim1" xdim1 ydim3 ydim4 "zdim1" zmax
    ex
    vol "-xdim1" xdim1 "-ydim4" "-ydim3" zdim1 "zmax"
    ex
$ Form the beam tunnel
#ecylinder
    material 1
    center 0.0 0.0
    semiaxes "radpri + thick2" "radsec + thick"
    orientation z
    range "-zmax" "zmax"
    part full
    ex
    material 0
    center 0.0 0.0
    semiaxes radpri radsec
    orientation z
    range "-zmax" "zmax"
    part full
    ex
$ Form the slot in the tunnel
    material 0
    center 0.0 0.0
    semiaxes "radpri + thick2"  "radsec + thick"
    orientation z
    range "-zdim2" "zdim2"
    part full
    ex
$ Form the slots in the ladder
#brick
    mat 0
    vol "-xmax" "xmax"  "-ydim1" ydim1 "-zdim2" zdim2
    ex

$ ***********************************************
$ Open the graphics station and view the geometry
$ ***********************************************
open x
#2dplot
    mat all  grid y izcut 4
    ex
swi
#3dplot
    mat all rot 0 120 0 cells n ex
swi
close  x

$ ***********************************************
$ Open a mafia file and save the data from m310
$ ***********************************************
#file name tl type mafia action open status unknown ex
end
```

Appendix G
MAFIA Matrix Generator File for TunneLadder Circuit
(R Module Input File)

```
$ ********************************************
$ MAFIA matrix generator file for the TunneLadder circuit
$ ********************************************

noprintscreen

$ ********************************************
$ Open the mafia file with stored results from m310
$ ********************************************
#file name tl action open type mafia status old ex

$ ********************************************
$ Define the boundary conditions
$ ********************************************
define phase 45.0
#boundary
  xboun elec elec
  yboun elec elec
  zboun periodic
  zphase phase
$ ********************************************
$ Define the materials used in m310
$ ********************************************
#material
  mat 1 type elec
  mat 0 type normal eps 1
  mat 2 type norm eps 5.5
  show

$ ********************************************
$ Start the matrix generation
$ ********************************************
#matrix ex

end
```

Appendix H
MAFIA Eigenvalue Solver File for TunneLadder Circuit
(E Module Input File)

```
$ ********************************************
$ MAFIA eigenvalue solver file for the TunneLadder circuit
$ ********************************************

noprintscreen

$ ********************************************
$ Open the mafia file with stored results from m310 and r310
$ Open an output file to view the results
$ ********************************************
#file name tl action open type mafia status old ex
    name tle type print action open status unk ex

$ ********************************************
$ Enter the solver section setting desired parameters
$ ********************************************
#solver
  accuracy 0.0001
  modes 8
  iter 3
  ex

printscreen
echo 'zphase ——>' @zphase
show
noprintscreen
end
```

Appendix I
MAFIA Postprocessor File for TunneLadder Circuit
(P Module Input File)

```
$ ***********************************************
$ MAFIA postprocessor file for the TunneLadder circuit
$ ***********************************************

noprintscreen
$ ***********************************************
$ Open the mafia file with stored results from m310, r310, and e310
$ Open an output file to view the results
$ ***********************************************
#file
name tl2 ty mafia act op stat unk ex

name printz ty print act op stat unk ex

def harmon 0
$       ^ set the harmonic of synchronization with the electron beam

def period 0.3175e-3
$       ^^^^^^^^ set this to the period length in meters

def cavnum 2
$       ^  number of cavities

def evenodd 1
$        ^  odd/total/even synthesis corresponding to -1/0/1
$          This input is used for the Fourier analysis done on Eztot

def vg 1.70611e+7
$    ^^^^^^^^^^ group velocity in meters per second
def phase "45"
$       ^^^^^^^  total phase shift per cavity

def zstart @zmin
$       ^   where the first longitudinal mesh point starts in meters

$ ***********************************************
$ Define the location of symmetry planes
$ ***********************************************
#general
sym no no no no no no
$  ^^^^^^^^^^^^^^^^ change symmetries accordingly

define cnst 1.9e+7
$       ^^^^^^ this value defines the conductivity in siemens per meter

#material mat 1 kappa cnst
        conduct cnst cnst cnst cnst 0 0
$           ^^^^^^^^^^^^^^^^^^^^^^ the conductivity is defined here
$                                  for each boundary
        mat 2 taneps 3.0e-4
$           ^^^^^^^^^^^^^ the loss tangent for the dielectric material

printscreen
$ ***********************************************
$ The total energy is calculated
$ ***********************************************
#energy sym e/1 density y losses y ex

$ ***********************************************
$ The power losses are calculated
$ ***********************************************
#losses sym b/1 den yes ex
define powloss "@metalpower+@epspower"
$           ^^^^^^^^^^^^^^^^^^^^
$           @metalpower is the total loss from conducting material
$           @epspower is the total loss from the dielectric

define atten "(8.686*powloss*period)/(2*@totalenergy*vg)"
     ^^^^^ The circuit attenuation is defined in decibels per cavity

printscreen
echo '%harmon' harmon
echo '%frequency' @frequency
echo '%period' period
echo '%energy' @totalenergy
echo '%powloss' powloss
echo '%atten' atten
echo '%phase' phase
echo '%cavnum' cavnum
echo '%evenodd' evenodd
echo '%vg' vg
echo '%zstart' zstart

$ ***********************************************
$ The axial electric field is printed
$ ***********************************************
#print
sym e/1
comp z
norm x
ylow 0.0
yhigh @ddminy
$  ^^^^ this value should be the second positive mesh point in the y
direction

printscreen
ex
end
```

Appendix J
Determining the Energy and Power Loss Associated With a Traveling Wave

The electromagnetic energy in the structure per unit length can be expressed as

$$W = \varepsilon \int_{vol} E^2 dv \tag{17}$$

It follows that the total energy associated with a traveling wave can be expressed as

$$W_T = \varepsilon \int_{vol} \sum_{n=-\infty}^{\infty} \left| A_n e^{-j\beta_n z} \right|^2 dv \tag{18}$$

where A_n is the electric field amplitude of the nth space harmonic. Thus,

$$W_T = \varepsilon \int_{z=0}^{NL} \sum_{n=-\infty}^{\infty} F_n (A_n)^2 dz \tag{19}$$

with

$$F_n = \iint dxdy \tag{20}$$

Integrating from $z = 0$ to $z = NL$,

$$W_T = NL\varepsilon \sum_{n=-\infty}^{\infty} F_n (A_n)^2 \tag{21}$$

Proceeding in the same manner, we can express the total energy associated with a standing wave as

$$W_S = \varepsilon \int_{vol} \sum_{n=-\infty}^{\infty} \left(2A_n \cos(\beta_n z)\right)^2 dv \tag{22}$$

Using the relationship,

$$\int \cos^2(az)dz = \frac{z}{2} + \frac{\sin(2az)}{4a} \tag{23}$$

we can evaluate the integral as

$$W_S = 2NL\varepsilon \sum_{n=-\infty}^{\infty} F_n (A_n)^2 \tag{24}$$

Therefore, it can be seen that the energy associated with a traveling wave is half that associated with a standing wave,

$$W_T = \frac{W_S}{2} \tag{25}$$

A similar argument can be used to prove that the total power loss associated with a traveling wave P_{LT} is half that associated with a standing wave P_{LS}. The time-averaged power loss per unit length can be expressed as

$$P_L = \frac{1}{2\sigma\delta} \int_S H_t \cdot H_t^* dS \tag{26}$$

where σ is the conductivity in siemens per meter, δ is the skin depth in meters, and H_t is the magnetic field component tangential to the circuit walls. Because the magnetic fields are proportional to the electric fields by a factor η, the intrinsic impedance of the media, it can be deduced that the magnetic fields associated with a traveling wave and a standing wave will have the same relationship as the electric fields associated with a traveling wave and a standing wave. (The value of the field for a traveling wave E_n is half that for a standing wave E_{nS}, ref. 13). It follows that the evaluation of equation (10) for the power loss associated with a traveling wave and a standing wave will also have the same relationship as the electromagnetic energy calculations just shown. Therefore, it can be determined that

$$P_{LT} = \frac{P_{LS}}{2} \tag{27}$$

References

1. Weiland, T.: On the Numerical Solution of Maxwell's Equations and Applications in the Field of Accelerator Physics. Part. Accel., vol. 15, 1984, pp. 245–292.
2. Weiland, T.: On the Unique Numerical Solution of Maxwellian Eigenvalue Problems in Three Dimensions. Part. Accel., vol. 17, 1985, pp. 227–242.
3. Wilson, J.D.: Revised NASA Axially Symmetric Ring Model for Coupled-Cavity Traveling-Wave Tubes. NASA TP–2675, 1987.
4. Wilson, J.D., et al.: A High-Efficiency 59 to 64 GHz TWT for Intersatellite Communications. IEDM, Technical Digest: International Electron Devices Meeting, IEEE, Washington, D.C., 1991, pp. 585–588.
5. Rousseau, A.L.; Tammaru, I.; and Vaszari, J.P.: Development of a 75–Watt 60–GHz Traveling-Wave Tube for Intersatellite Communications. NASA CR–182135, 1988.
6. Jacquez, A., et al.: A Millimeter-Wave TunneLadder TWT. NASA CR–182184, 1988.
7. Karp, A.: Traveling-Wave Tube Experiments at Millimeter Wavelengths With a New, Easily Built, Space Harmonic Circuit. Proc. IRE, vol. 43, Jan. 1955, pp. 41–46.
8. Karp, A.: Backward-Wave Oscillator Experiments at 100 to 200 Kilomegacycles. Proc. IRE, vol. 45, Apr. 1957, pp. 496–503.
9. Karp, A.: Design Concepts for a High-Impedance Narrow-Band 42 GHz Power TWT using a "Fundamental/Forward" Ladder-Based Circuit. NASA CR–165282, 1980.
10. Kantrowitz, F.; and Tammaru, I.: Three-Dimensional Simulations of Frequency-Phase Measurements of Arbitrary Coupled-Cavity RF Circuits. IEEE Trans. Elec. Dev., vol. 35, no. 11, Nov. 1988, pp. 2018–2026.
11. Gewartowski, J.W., and Watson, H.A.: Principles of Electron Tubes. D. Van Nostand Company, Inc., 1965, p. 357.
12. Maruschek, J.W.; Kory, C.L.; and Wilson, J.D.: Generalized Three-Dimensional Simulation of Ferruled Coupled-Cavity Traveling-Wave Tube Dispersion and Impedance Characteristics. NASA TP–3389, 1993.
13. Ramo, S.; Whinnery, J.R.; and Van Duzen, T.: Fields and Waves in Communications Electronics. Second ed., John Wiley and Sons, New York, 1984, p. 238.
14. Gandhi, O.P.: Microwave Engineering and Applications. Pergamon Press, New York, 1981.
15. Tischer, F.J.: Experimental Attenuation of Rectangular Waveguides at Millimeter Wavelengths. IEEE Trans., vol. MTT–27, no. 1, Jan. 1979, pp. 31–37.
16. Kory, C.L.; and Wilson, J.D.: Simulation of TunneLadder Traveling-Wave Tube Cold-Test Characteristics: Implementation of the Three-Dimensional, Electromagnetic Circuit Analysis Code Micro-SOS. NASA TP–3294, 1993.

REPORT DOCUMENTATION PAGE

Form Approved
OMB No. 0704-0188

1. AGENCY USE ONLY (*Leave blank*)

2. REPORT DATE
May 1995

3. REPORT TYPE AND DATES COVERED
Technical Paper

4. TITLE AND SUBTITLE
Three-Dimensional Simulation of Traveling-Wave Tube Cold-Test Characteristics Using MAFIA

5. FUNDING NUMBERS
WU–235–01

6. AUTHOR(S)
Carol L. Kory and Jeffrey D. Wilson

7. PERFORMING ORGANIZATION NAME(S) AND ADDRESS(ES)
National Aeronautics and Space Administration
Lewis Research Center
Cleveland, Ohio 44135–3191

8. PERFORMING ORGANIZATION REPORT NUMBER
E–9192

9. SPONSORING/MONITORING AGENCY NAME(S) AND ADDRESS(ES)
National Aeronautics and Space Administration
Washington, D.C. 20546–0001

10. SPONSORING/MONITORING AGENCY REPORT NUMBER
NASA TP–3513

11. SUPPLEMENTARY NOTES
Carol L. Kory, Analex Corporation, 3001 Aerospace Parkway, Brook Park, Ohio 44142 (work funded by NASA Contract NAS3–25776) and Jeffrey D. Wilson, NASA Lewis Research Center. Responsible person, Jeffrey D. Wilson, organization code 5620, (216) 433–3513

12a. DISTRIBUTION/AVAILABILITY STATEMENT
Unclassified - Unlimited
Subject Category 33

12b. DISTRIBUTION CODE

13. ABSTRACT ***(Maximum 200 words)***

The three-dimensional simulation code MAFIA was used to compute the cold-test parameters—frequency-phase dispersion, beam on-axis interaction impedance, and attenuation—for two types of traveling-wave tube (TWT) slow-wave circuits. The potential for this electromagnetic computer modeling code to reduce the time and cost of TWT development is demonstrated by the high degree of accuracy achieved in calculating these parameters. Generalized input files were developed for ferruled coupled-cavity and TunneLadder slow-wave circuits. These files make it easy to model circuits of arbitrary dimensions. The utility of these files was tested by applying each to a specific TWT slow-wave circuit and comparing the results with experimental data. Excellent agreement was obtained.

14. SUBJECT TERMS
Traveling-wave tube; Coupled-cavity; Dispersion; Impedance; Attenuation; TunneLadder

15. NUMBER OF PAGES
30

16. PRICE CODE
A03

17. SECURITY CLASSIFICATION OF REPORT	18. SECURITY CLASSIFICATION OF THIS PAGE	19. SECURITY CLASSIFICATION OF ABSTRACT	20. LIMITATION OF ABSTRACT
Unclassified	Unclassified	Unclassified	