(NASA-TM-111276) THE ROLE OF STRUCTURAL DYNAMICS IN THE DESIGN AND OPERATIONS OF SPACE SYSTEMS: THE HISTORY, THE LESSONS, THE TECHNICAL CHALLENGES OF THE FUTURE (NASA. Marshall Space Flight Center) 24 p

N96-18512

Unclas

G3/15 0099880

NASA-TM-111276

THE ROLE OF STRUCTURAL DYNAMICS IN THE DESIGN AND OPERATIONS OF SPACE SYSTEMS; THE HISTORY, THE LESSONS, THE TECHNICAL CHALLENGES OF THE FUTURE

Robert S. Ryan
George C. Marshall Space Flight Center
Marshall Space Flight Center, Alabama 35812

ABSTRACT

Structural dynamics and its auxiliary fields are the most progressive and challenging areas space system engineering design and operations face. Aerospace systems are dependent on structural dynamicists for their success. Past experiences (history) are colored with many dynamic issues, some producing ground or flight test failures. The innovation and creativity that was brought to these issues and problems are the aura from the past that lights the path to the future. Using this illumination to guide understanding of the dynamic phenomena and designing for its potential occurrence are the keys to successful space systems. Our great paradox, or challenge, is how we remain indepth specialists, yet become generalists to the degree that we make good team members and set the right priorities. This paper will deal with how we performed with acclaim in the past, the basic characteristics of structural dynamics (loads cycle, for example), and the challenges of the future.

I. INTRODUCTION

Structural dynamics is one of the most important engineering disciplines of design. In aerospace, almost every aspect of design is influenced by structural dynamics. The primary goal of this paper is to provide the dynamicists with some insight or vision into the future. Influences from the past history of structural dynamics in aerospace will provide the foundation for shaping the future and directing the vision.

This paper is divided into three areas: (1) the past, (2) the present, and (3) the future. A concluding section discusses some paradoxes that must be addressed. As an introduction, several special topics are reviewed below.

A. The Force Behind Dynamics

First, the unrelenting demand for high-specific strength aerostructures results in very flexible elements which propagate major dynamic concerns and problems during design, verification, and operations. Said another way, high-performance requirements of space and aeronautic systems reduce margins and increase sensitivities to uncertainties and parameter variation. Control of dynamic response is therefore a rapidly expanding technology with its unique set of problems.

B. Memories

Second, memories are the reminder of the importance of structural dynamics. These memories include the many experiences of Pogo, particularly the one that resulted in shutting down the Apollo 13 S-II stage center engine. Also, the space shuttle Solid Rocket Booster (SRB)/Solid Rocket Motor (SRM) ignition overpressure in retrospect was a little scary. The Hubble Space Telescope (HST) day/night terminator exciting the system modes and creating pointing accuracy errors was troublesome, although work-arounds were devised. The recent replacement of the solar arrays should eliminate the problem. The big role that tether dynamics has played in the design and operations of the Tether Satellite System First Mission (TSS-1) is an interesting example. Also, structural dynamics is a concern on all launch systems for gust response dynamics, transient dynamics of launch vehicles at lift-off, docking of spacecraft, and separation of system elements. Flutter and buffet, along with modal stability and load relief, serve as reminders of the importance of structural dynamics. The major role that high-cycle fatigue has played in the development of reusable liquid propulsion engines through hot-fire testing induced failures is another classic example. Memories light the pathway to the future.

C. Characteristics

Third, structural dynamics characterization has a good mathematical foundation. Structural dynamic responses are manifest in several well-understood ways: (1) instability, (2) forced response, and (3) transient response. All of these are well formulated mathematically. The problem engineers face in dealing with dynamics is twofold: (1) modeling and verifying the structural dynamic characteristics and (2) predicting the imposed natural and induced environments with their variations.

Reference 1 says that "the essence of modeling, as we see it, is that one begins with a nontrivial word problem about the world around us. We then grapple with the not always obvious problem of how it can be posed as a mathematical question . . . One of the lessons learned is that there is no best model, only better ones. The model is only a suggestive metaphor, a fiction about the messy and unwieldy observations of the real world. In order for it to be persuasive, to

convey a sense of credibility, it is important that it not be too complicated and that the assumptions that are made be clearly in evidence. In short, the model must be simple, transparent, and verifiable."

D. Trades in the Design Process

Fourth, it is a truism that all design is a balancing act; therefore, in accomplishing the design tasks associated with structural dynamics, many problems arise, trades must be accomplished, and compromises made. The nature of engineering design dictates that this balancing act must be based on knowledge, not only of structural dynamics, but of the total system. Therefore, structural dynamicists are faced with challenging but exciting tasks.

Pye[2] discusses the source of problems and these compromises. He talks about the source of problems dealing with the manifestation and transfer of energy. He says, "Now whenever a change is made, by the passage of energy . . . When you put energy into a system you can never choose what kind of changes shall take place and what kind of results shall remain. . . All you can do, within limits, is to regulate the amounts of the various changes by design, ensuring that at least you get the change you want along with others which you don't. If you want some of this then you must take some of that as well, even though you do not want it." Later he says, "The requirements for design conflict and cannot be reconciled. All designs for devices are in some degree failures . . . The designer or his client has to choose to what degree and where there shall be failures . . ." So our job is always challenged by trades. With this introduction, the next discussion deals with the past.

II. THE PAST: PROBLEMS, CHALLENGES, CREATIVITY, AND INNOVATION APPLIED

The greatest thrill that I have had has been to see the innovation, creativity, and common sense structural dynamicists have exhibited when major dynamic problems or issues have surfaced. Space exploration and aeronautical development, as well as the transportation industry and other endeavors, are replete with examples of these unexpected dynamic structural responses. Recently, I have been in the process of categorizing and documenting problems I have dealt with in space exploration for approximately the past 38 years.[3-6] Most cases are in the broad category of dynamics. Our future demands that we must understand the breadth and scope of dynamic manifestations and prevent or control their occurrences. In accomplishing this, the dynamicist must also deal with a multitude of interactions such as fluid-structure, structural control, and aeroelasticity, to name a few. Structural dynamicists have made a name for themselves in how their creativity dealt with these issues. In this brief look at the past, it is hoped that we can see the variety, be excited, and accept the challenge that dynamics offers, and marvel in the creativity and innovation required for their solutions, particularly where the brute-force computational approach was not available.

A. The Jupiter Defense Missile (Late 1950's)

The Jupiter defense missile experienced a max-q failure due to the closed-loop coupling between propellant sloshing, rigid-body vehicle rotation, and the vehicle attitude control system. The original mathematical description of the problem was unable to predict this failure condition. To fix the failure required a better understanding of the system dynamic behavior and component interactions, which in turn required improved math models and new test verification methods. Due to the complexity of the hydrodynamic equations, it was not feasible to couple them with the vehicle dynamics and control system. A single degree of freedom mass, spring, and damper system was constructed that closely approximated the hydrodynamic analytical results, and was added to the system describing equations with the attitude control system feedback. The second innovation was a subscale model and full-scale sloshing model tests. The full-scale dynamic test consisted of installing a Jupiter liquid oxygen (lox) tank full of water on a railroad car and lightly bumping it against the track stop. A third innovative solution was floating long cylindrical cans (commode float in one end of the perforated cylinder, named beer cans), thus filling up the propellant surface and damping the liquid motion (fig. 1). The fourth innovation occurred after several successful flights in which baffles were integrated with the propellant tank stiffener ring frames to provide damping which controlled the liquid dynamics while serving as structural rings. The Guidance, Navigation, and Control (GN&C) system was also part of the problem in that the trajectory tilt program was a series of steps that increased the sloshing dynamics. A continuous tilt program was implemented thereby removing this excitation force.

B. The Saturn I and IB Program (1960's)

The Saturn I and IB program, the testbed for the Saturn V Apollo program, had some unique problems and solutions (fig. 2). The cluster of eight Redstone diameter tanks around a larger center tank presented many structural dynamic challenges. One problem was how to accurately model the tanks clustered with the upper supporting spider beam, providing the load path from the first stage to the second stage. Finite element codes were not available. Computer capability was not extensive nor was testing capability in terms of today's standards. The innovative analytical modeling approach assumed clamped/hinged modes of the clustered tanks coupled to the rest of the system and the center tank and upper stage. This was done by writing the system equations of motion using generalized coordinates through a Lagrangian approach. This was the first approach to what developed later as modal coupling. A very accurate system mode, in comparison to test

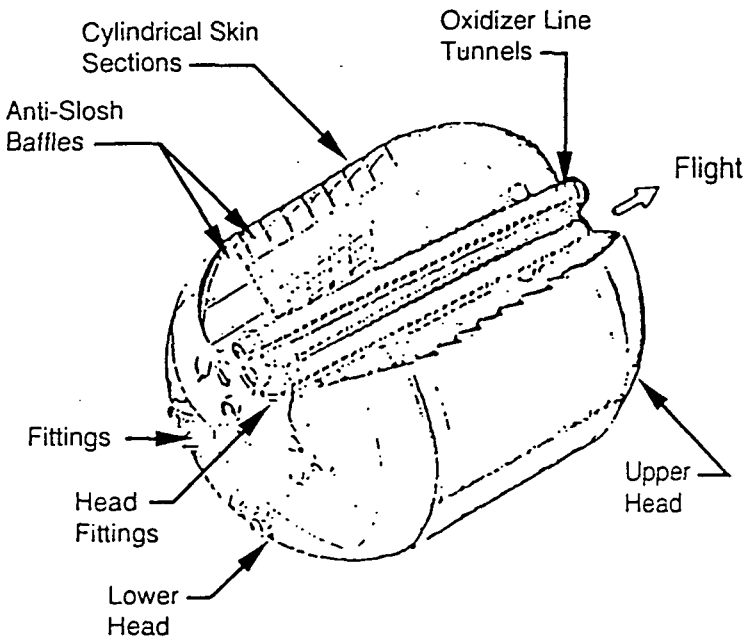

Saturn V S–IC Fuel Tank Assembly

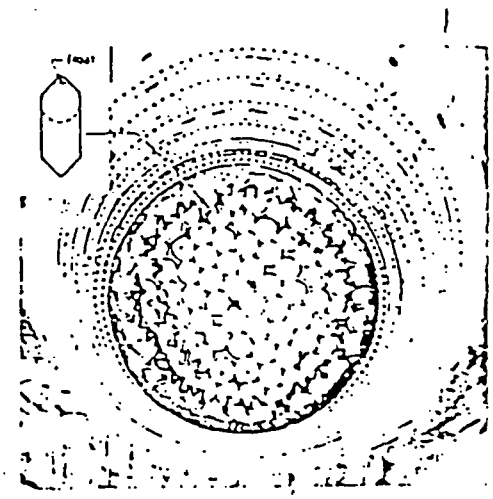

Typical Ring Baffles For Sloshing

Floating Can Slosh Suppression Device

Fig. 1. Jupiter Slosh Suppression Techniques.

derived system modes, resulted using very few component modes; the secret being in the proper selection of the end conditions for the component models.

At this time, very few subroutines existed for solving for the eigenvalue/eigenvector or root locus values. Engineers developed crude approaches using the gradients (slopes) of the characteristic equations. Complexity of the dynamics of the structure model required verification. A scaled model was developed and tested at Langley Research Center, while the Marshall Space Flight Center conducted a full-scale structural dynamic test. Water was used to simulate the liquid propellant. Later, hydrogen was simulated using Styrofoam balls. During this test, the support system (long cables) used to approximate the in-flight free condition tuned up with the vehicle modes clouding the vehicle modal data. Two-by-fours were tied to the middle of the cables detuning these suspension modes, thus producing good vehicle modal data.

During data evaluation of the Saturn I vehicle dynamic test, attempts were made to filter the support mode effects from the vehicle modes. This led to an erroneous set of modes that were unstable when coupled with the control system. The first Saturn I flight was held 2 weeks to sort this problem out. The story of this concern appeared in *Fortune* magazine[7] with descriptive stories of the potential dynamics disaster. All problems were sorted out and the flight was flawless.

C. The Saturn V (Late 1960's)

1. Pogo. The Saturn V had many interesting problems. Pogo topped the list. Pogo occurred on the first stage of the second Saturn V launch. It was due to a redistribution of the mass in the simulated Apollo capsule and command module, changing the gain of the first longitudinal mode and causing it to tune with the fluid modes (fig. 3). The fix was simple: use a wrap-around accumulator on a duct to detune the fluid modes from the structural modes. Early on, the second stage S-II had nonlinear Pogo oscillations which were not considered a problem. As the program progressed, the Pogo got worse. Because the main coupling was the center engine and excess performance was present, it was decided to shut this engine down in flight prior to the time Pogo was being observed and to install a center engine cutoff if Pogo amplitude occurred while the engine was running. Fortunately this was done. On Apollo 13, the ill-fated flight for other reasons, Pogo occurred early in the S-II stage burn, shutting down the center engine. The amplitude, in all probability, was large enough to yield the thrust frame, even with the cutoff approach, due to the sharpness of the instability (fig. 4).

In order to deal with the Pogo problem, many innovative test and analysis tools were developed in addition to the use of a Pogo working group, the forerunner of today's concurrent engineering teams. Hydroelastic testing of the tanks, acoustical testing of the ducts containing fluid, and nonlinear pump tests

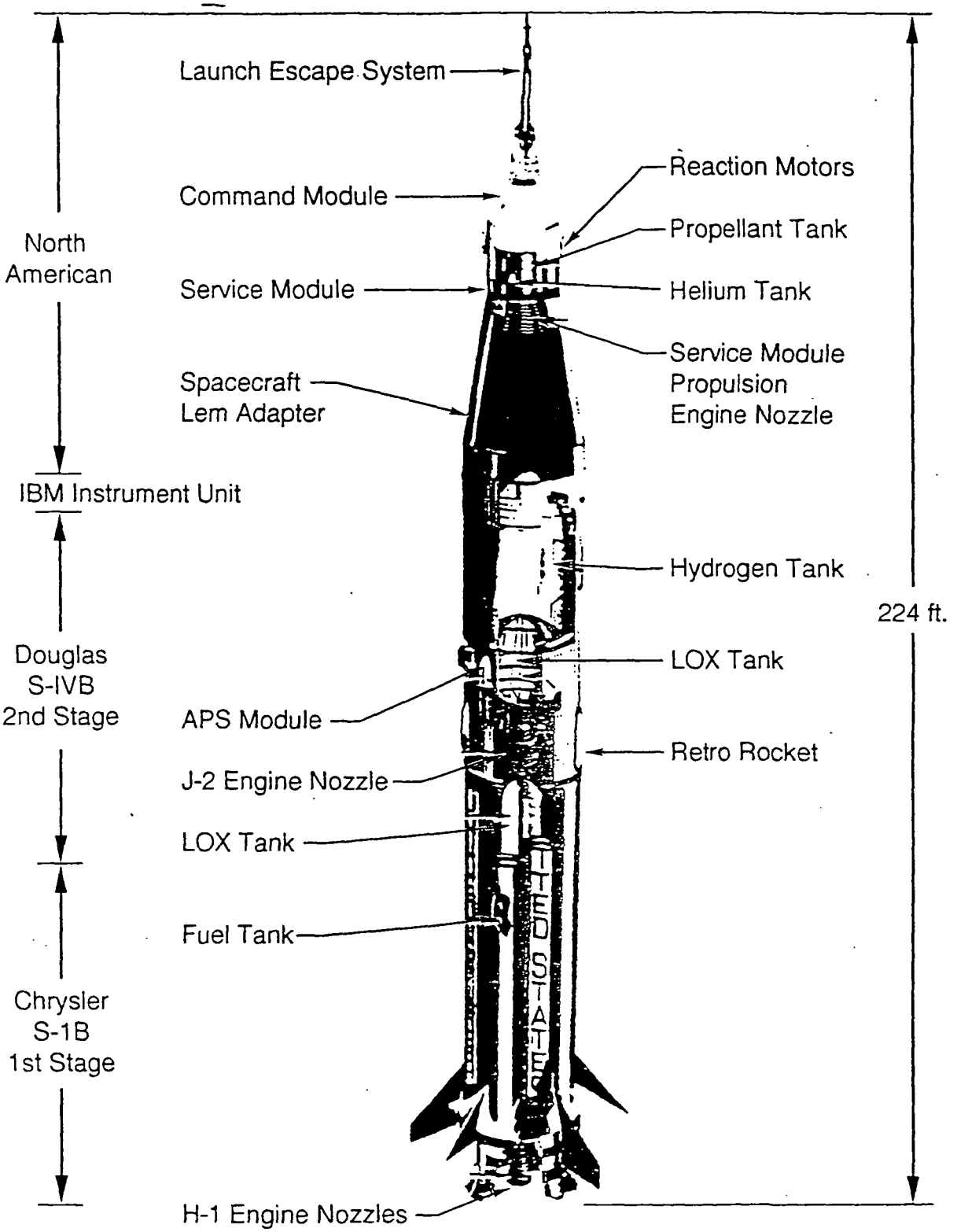

Fig. 2. Saturn 1B.

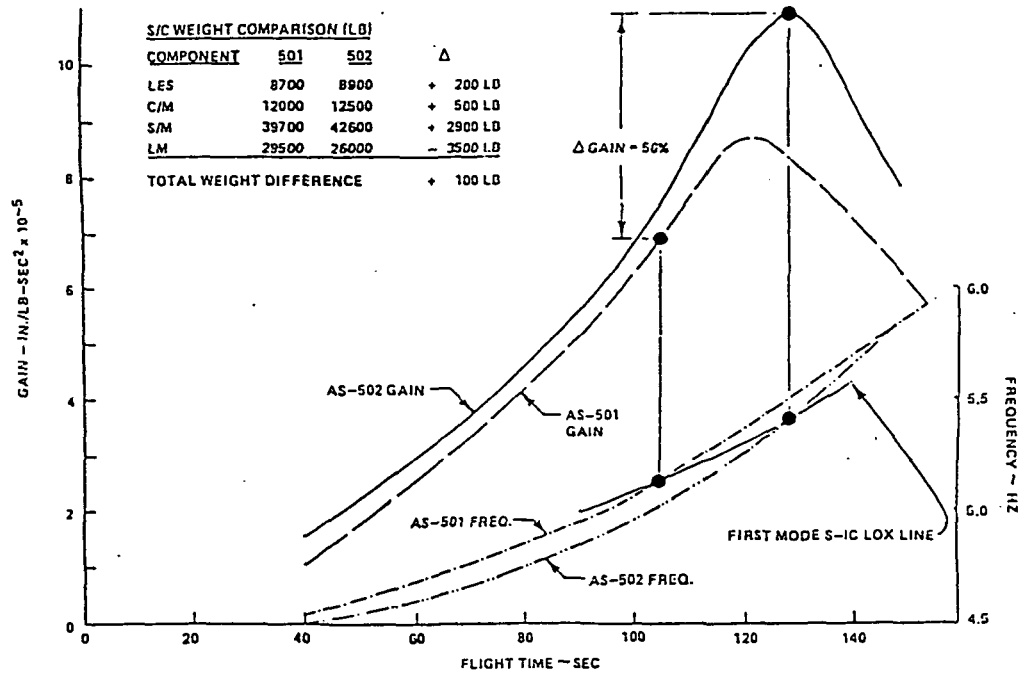

Fig. 3. AS-501/AS-502 First Mode Longitudinal Structural Dynamic Characteristics Comparison.

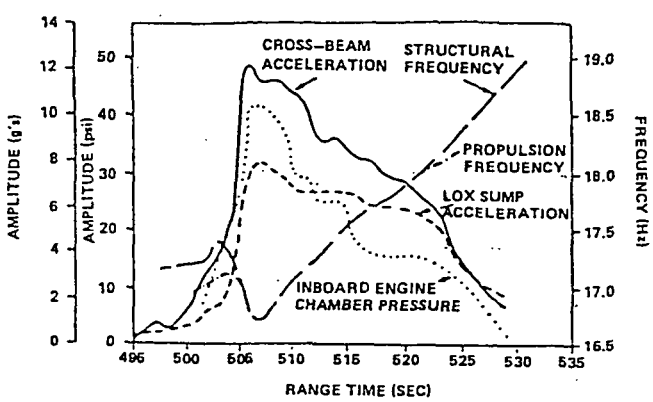

Fig. 4. AS-504 S-II Stage Pogo.

were conducted in order to get linear and nonlinear dynamic characteristics. In order to simulate the nonlinear coupled system of structure, fluid, and propulsion, a hybrid computer was used where the nonlinear elements were formulated on the analog side while the linear elements were simulated on the digital side. A good correlation was obtained with flight data (fig. 5). The fix was simple in concept, using an accumulator on the feed line; however, the accumulator had to be filled at engine start, thereby causing the frequencies to momentarily tune. This turned out not to create a problem, and all subsequent flights were Pogo-free.

2. Scaled Model Test. Dynamic testing of the all-up Saturn V vehicle was a major effort and was coupled with a scaled model test. Not only was a scale model of the total vehicle developed, but after the Apollo 13 incident with the SLA panel failure and lateral/longitudinal coupling of the LEM response, a detailed scaled model of the LEM, Apollo service module, and capsule was built and tested. This scaled model incorporated the scaling of manufacturing tolerances. This was necessary due to the nonlinear effects of gaps and joints changing the mode shapes and frequencies—a lesson learned in early scale model testing. In order to simulate the mass effects of hydrogen in the tank during full-scale testing, the hydrogen tank was filled with Styrofoam balls. A hydrodynamic (fluid bearing) support system was developed to get free-free conditions.

3. Controls and Coupling. The controls community developed and implemented the load relief technology using accelerometers instead of external flow-mounted angle-of-attack meters. Elastic body (modal) response and stability was a major issue and required the development of approaches to integrate structural dynamics and control. A natural extension was the development of modal suppression (in the aeronautics side, this was called ride control) techniques which, in conjunction with rigid-body load relief, not only reduced the basic aerodynamically induced loads, but also reduced the response due to elastic-body dynamics and wind gust and turbulence excitation. Years later, this technology evolved into active flutter suppression and aeroelastic tailoring.

The long, slender configurations raised many questions in terms of this control/structural/aerodynamic

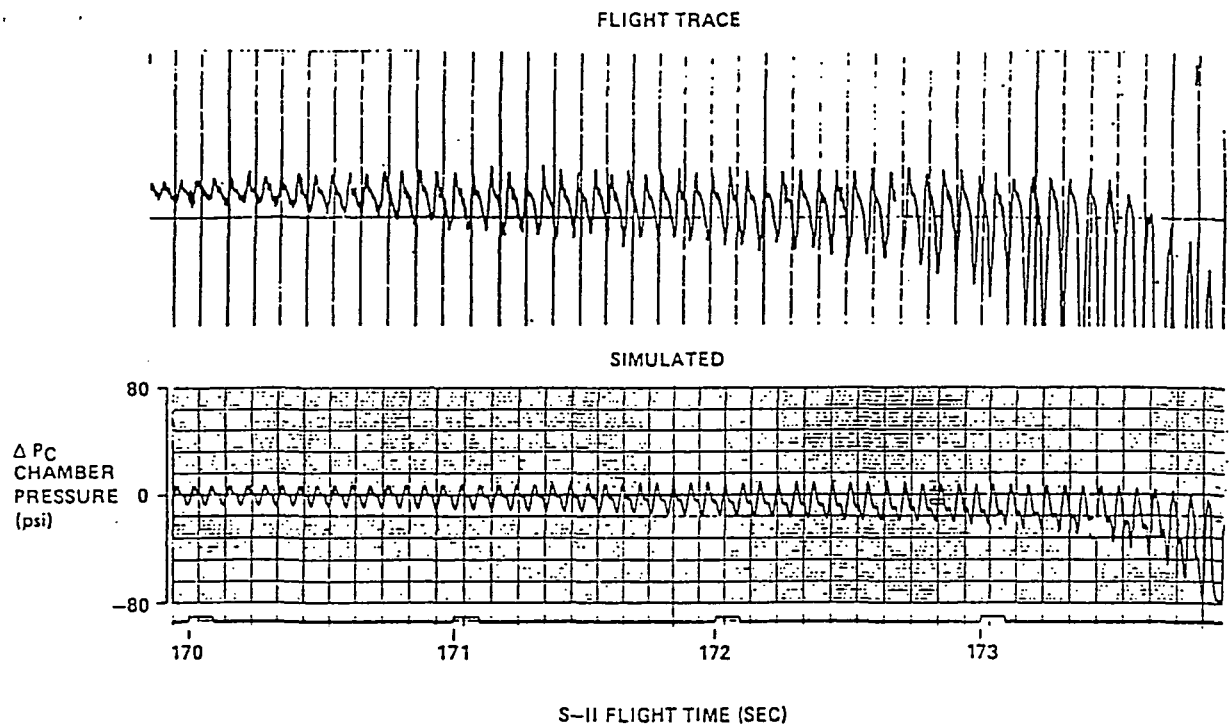

Fig. 5. S-II Stage Pogo.

system due to potentially strong couplings (aeroelasticity). Technology evolved based on aircraft experience to deal with static aeroelastic effects, gust penetration, and the hammerhead effects. The technology involved not only analytical models, but also scale model wind tunnel testing.

4. Wind Technology. Wind biasing technology matured and became a viable operational tool for adding flexibility and increasing margins. All these technologies required developing and maturing technologies in several additional areas:

1. Measuring and quantifying the atmospheric characteristics in terms of wind speed, shears, gust, and turbulence

2. Statistical data evaluation techniques, tools, and models

3. Structural dynamic characterization of complex, multibody systems.

In the atmospheric characterization arena, the Jimsphere balloon and better radar tracking technology developed, allowing the description of the winds including gusts in the 25-m range. During this time, the synthetic wind profile matured to incorporate not only wind speed, but also shear and gust. Three approaches were developed to handle the gust: (1) 9-m square wave that was tuned to match the vehicle lower mode frequencies, (2) tuned sine wave gust where amplitude varied with frequency, and (3) power spectral density formulation of turbulence. A month-by-month statistically significant sample of what were called real wind profiles was developed through a comprehensive wind sounding program. These wind profiles were used to run Monte Carlo elastic vehicle control response analysis using a high-speed repetitive analog computer. This system not only allowed a statistical characterization of the vehicle wind response, but also produced valid quantification of the synthetic profile approach for vehicle wind simulation.

One aside in terms of the synthetic wind profile development was the question of how to properly combine the wind speed, shear, and gust and do a conditional probability assessment. Putting together 3σ values of each was obviously too severe. Helmut Horn came up with the idea of conditionally dealing with a 3σ wind speed root sum squaring the 3σ shear and gust with the wind speed. William Vaughn was fundamental in this also as well as developing the wind sounding technology. Because the atmospheric (winds) had preferred monthly directional and speed characteristics, the technology evolved for biasing the launch trajectory to the monthly mean wind, reducing wind induced structural loads and increasing the launch probability/flexibility. Some performance loss occurred due to the path errors introduced in order to reduce angle of attack. The performance people would have raised the $(+\alpha)$ value in the atmosphere, and the loads/controls people could not allow the unrestricted $+\alpha$. The compromise was to raise the nose (reducing α) at a profile starting at an agreed-to time, trading performance loss for reduced loads. No closed-loop guidance was used in the atmosphere for the same reason.

The synthetic wind profile approach did present one problem in that the vehicle response to winds had to consider variation of other vehicle parameters (control, aerodynamics, propulsion, structures) in

addition to winds, and also the stress analysts and designers needed time-consistent data in order to perform adequate analysis. Judson Lovingood developed the A-factor approach which took the root-sum-squared (RSS'ed) responses from sensitivity analysis to produce scalings of the parameter variations that, when applied, produced a time response analysis with the same peak as the RSS'ed sensitivity analysis.[8]

5. Lift-Off Loads. The Saturn V had a potentially large loads problem at lift-off due to the stored energy resulting from holding the vehicle down until the engines were at full thrust (engine health checkout system). A system was developed which created a soft release by extruding the holddown bolt through soft metal, thus greatly reducing the vehicle lift-off loads (figs. 6A and 6B).

D. The Space Shuttle (Late 1970's to Present)

The space shuttle design, development, and verification involved many dynamic issues, not the least of which were fatigue and fracture problems, rotordynamic issues in the main engine, and a highly dynamic launch vehicle at lift-off plus high rigid body dynamic transient loads at maximum dynamic pressure. Integrated and multidisciplinary analysis was a key technology in that control, performance (flight mechanics), loads, and thermal were highly coupled. Many innovations to accomplish this task were developed to support the program.

1. Ignition Overpressure. Understanding the physical phenomena of ignition overpressure and designing a suppression approach was a key technology area, as well as the innovation used in arriving at a fix. Testing of a 6.4-percent scale model of the shuttle propulsion and its enhancement allowed both the physical understanding and the assessment of the water spray suppression and water troughs. The scaled tests showed that water, when injected into the flow, reduced the wave formation and, if contained, presented a shield which blocked the overpressure waves. A significant outcome from these tests was the baselining of water troughs as an insurance solution to the water spray injections (figs. 7A and 7B).

2. Space Shuttle Main Engine (SSME). The SSME, with its high-performance requirements (454 ISP) and a 55-mission life coupled with geometric and weight constraints, developed fatigue and fracture issues that led to the development or enhancement of several technologies. Dealing with lifetime issues required a detailed characterization of both structural models and environments which pushed development of computational fluid dynamics (CFD's) technology. This technology started, evolved, and matured in 10 years, greatly enhancing the maturity of the SSME. Also, finite element structural analysis matured during this time. Verification of environments required the development of special instrumentation for flows, acoustics,

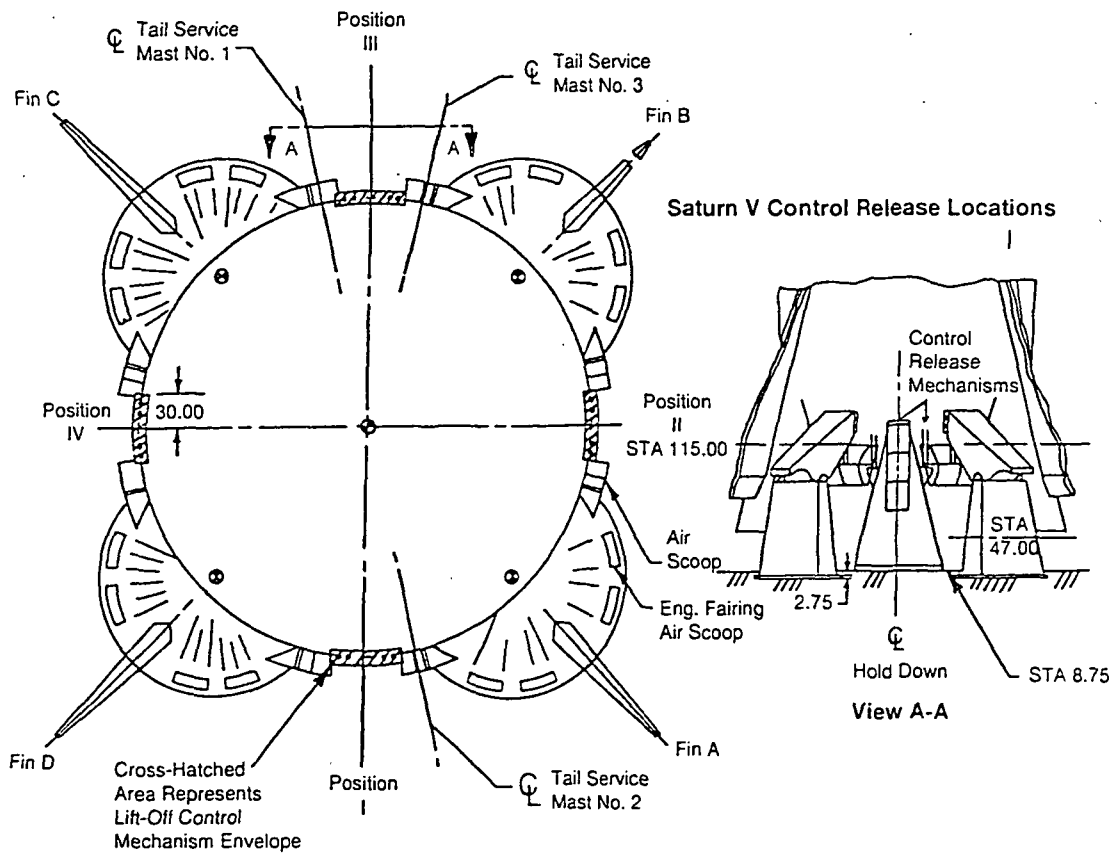

Fig. 6A. SV Soft Release.

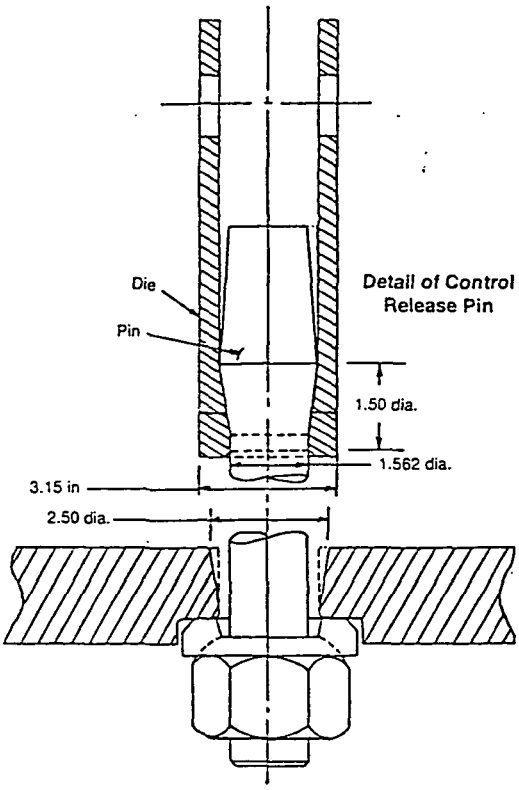

Fig. 6B. SV Soft Release.

and vibration. Data diagnostics (particularly dynamic) developed rapidly as well as data basing, providing the ability to screen hardware and to put a quantifiable maintenance and refurbishment program in place. This was true for both flow and mechanical vibration. Health monitoring systems and engine shutdown systems were based on these data bases. Cold-flow testing for benchmarking the CFD models and verifying environments reached a high level of sophistication. Normal fracture control technology evolved to include high-cycle fracture mechanics. Combining low- and high-cycle fatigue was a maturing technology. Thus, fracture control became a dominant discipline during this time. Two dynamic problems illustrate how the issues were worked for the SSME.

2.a. 4,000-Hz Vibration. The SSME lox system fits the characteristics required to produce instabilities: high-density, large-flow velocities, resulting in a very high dynamic pressure. The inlet tee to the lox dome of the main combustion chamber (fig. 8) is a classic example. The tee has a two-blade splitter (flow between and on each side of the two vanes) designed to more evenly distribute the lox flow to the powerhead. On 90 percent of the engines nothing happens. However, on 10 percent of the engines a high-frequency, high-amplitude (4,000 Hz, 100 g's) oscillation occurs. If run long enough, the vanes crack, detuning the structure from the flow, and eliminating, or greatly reducing, the response. Two types of structural elastic flow

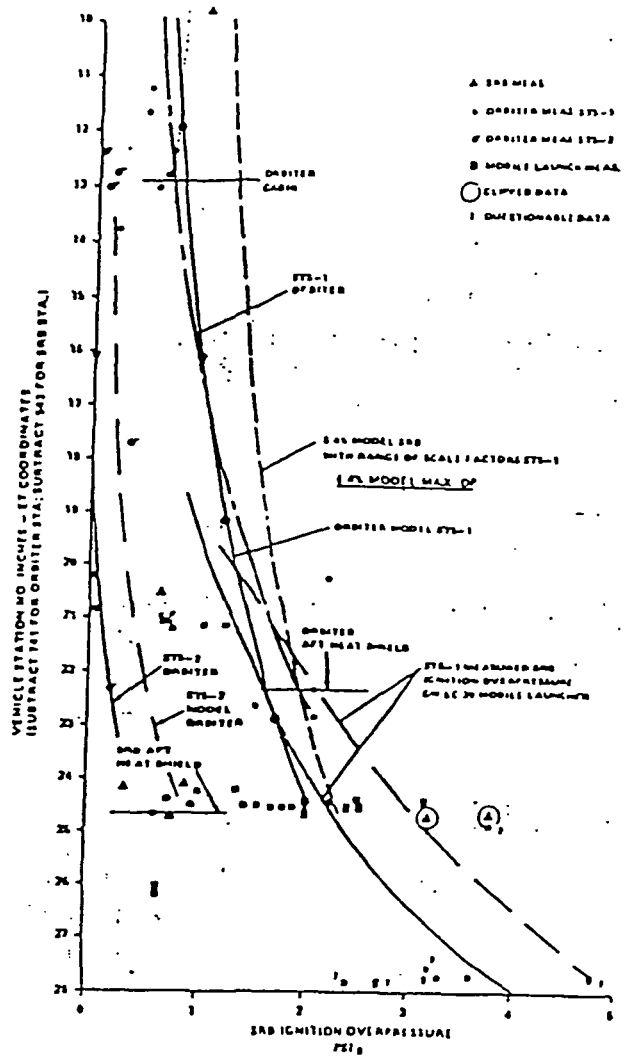

Fig. 7A. STS-1 Measured SRB Ignition Overpressure Versus Vehicle Station.

interaction are possible: (1) vortex shedding and (2) flutter-type instability. Extensive effort was expanded to understand the problem which led to the conclusion that the basic instability was essentially vortex shedding. Figure 9 shows a typical response. The fix consisted of scalloping the vanes' leading edges to allow more flow between the blades and tapering the trailing edge to eliminate vortex sheets. In addition, the frequency of the vane was raised slightly, helping to detune the system. Figure 10 is a plot of the response before and after the fix.

One very interesting problem occurred during the investigation. It was thought that by putting a structural collar on the powerhead dome that the frequency shift would detune the system, and in addition, provide damping to further reduce the response. The collar was test-fired on a buzzing engine resulting in, not a reduced response, but a greatly increased oscillation. The dynamic detuning, in reality, became more finely tuned, creating the increased response.

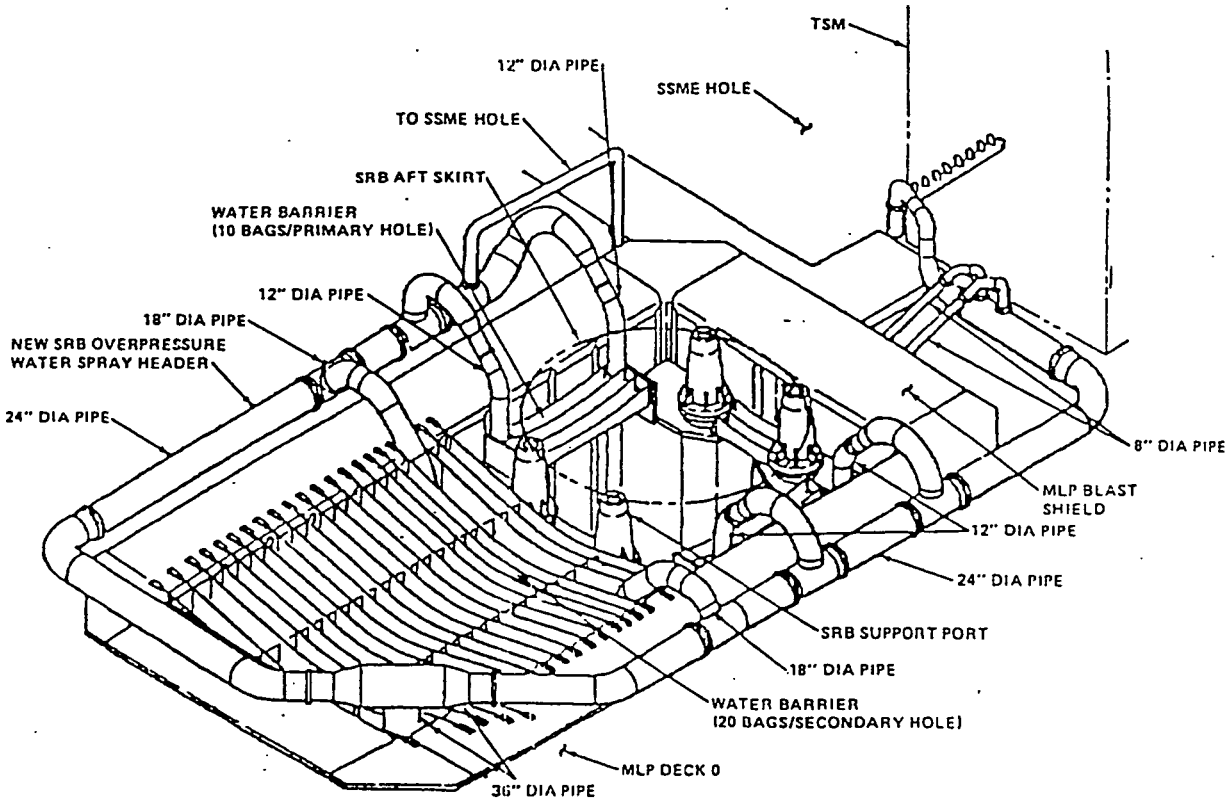

Fig. 7B. Overpressure Mods STS-2 Configuration.

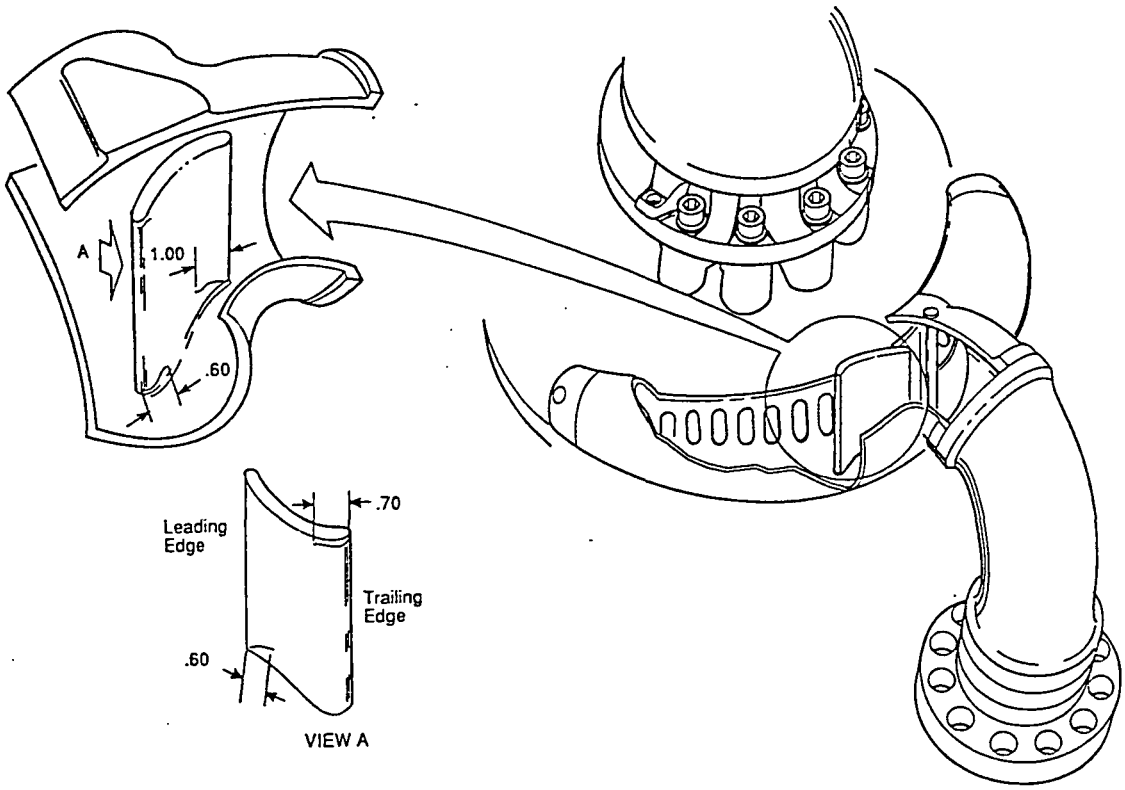

Fig. 8. Engine 2116 Main Injector Splitter Vane Cracks.

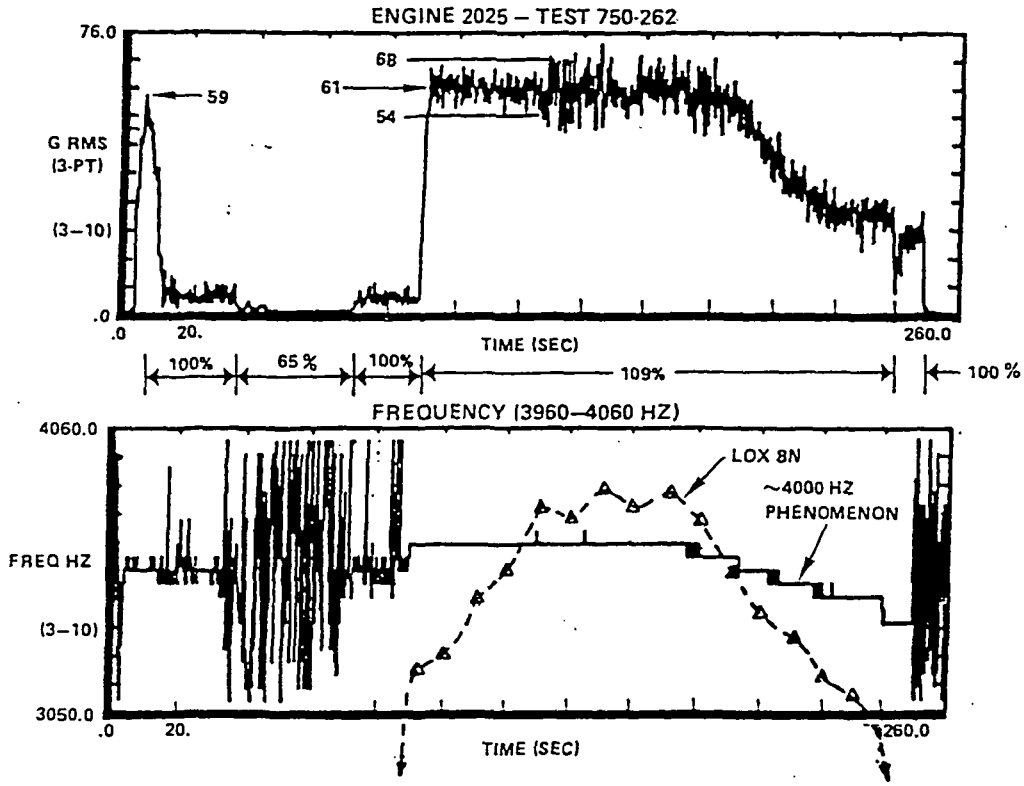

Fig. 9. 4,000-Hz Vibration Anomaly Gimbal Bearing Longitudinal Accelerometer.

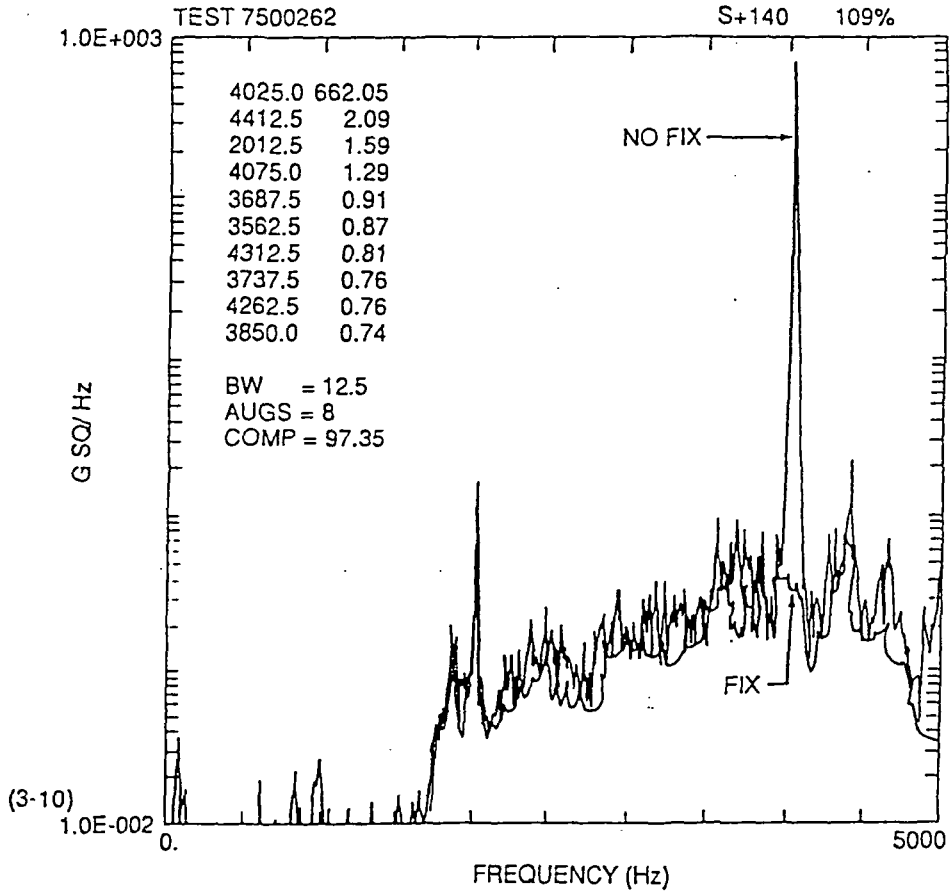

Fig. 10. Spectrum of Gimbal Bearing Accelerometer.

2.b. Subsynchronous Whirl Dynamics. Subsynchronous whirl, a characteristic of rotary machinery, has been a problem on the SSME. This motion takes the form of whirling or whipping of the flexed rotor at one of the rotor's natural frequencies below the running speed (fig. 11). Subsynchronous vibration motion appears suddenly at some "speed or power level of onset" with very large amplitudes and sustains or blooms at higher speeds so that either additional increases in running speed or power are impossible. The behavior of this class of vibration is particularly destructive because the rotor is whirling at a speed different from that of its rotational speed. Instabilities impose a continuing restraint on the performance capabilities of turbomachinery. The difference between a stable and unstable machine may be very small in magnitude and subtle in nature, so that the occurrence will vary from unit to unit of the same design and even from time to time on the same unit. Variations in assembly tolerances within specifications can be the difference. In self-excited vibration of rotating machinery, the excitation mechanism is a steady tangential force induced by some fluid or friction mechanism and is proportional to or increases with the shaft's deflection from its rotational center line. At a rotor speed above a limiting value, the destabilizing tangential force exceeds the stabilizing external damping. The shaft will whirl at its critical speed, independent of the rotational speed. Reference 9 is an excellent paper on the various aspects of whirl delineating all key parameters and the various characteristics of the responses.

Early in the shuttle development program, the fuel pump had a 50-percent subsynchronous whirl problem which was solved by a design change of the seals. The lox pump has had a 90-percent subsynchronous whirl, the solution being more elusive than for the fuel pump. Figure 11 shows a lox pump external acceleration measurement (isoplot) for a 500-s run at various power levels. Whirl is only present during the 109-percent power portion. A special hydrodynamic damping seal (fig. 12) was designed and implemented which provided increased stiffness and damping, solving the problem. Figure 13 is the whirl history of the full power level (FPL) SSME lox pump design. Notice that some pump builds do not whirl, while others grow into whirl. Also, notice how fast the response amplitude grows with the next firing once whirl is present. Obviously, the higher performance requirements of these pumps has resulted in a marginal whirl situation. Small differences in manufacturing (within specification) produce some pumps which whirl. Additional damping and other solutions were pursued to solve this

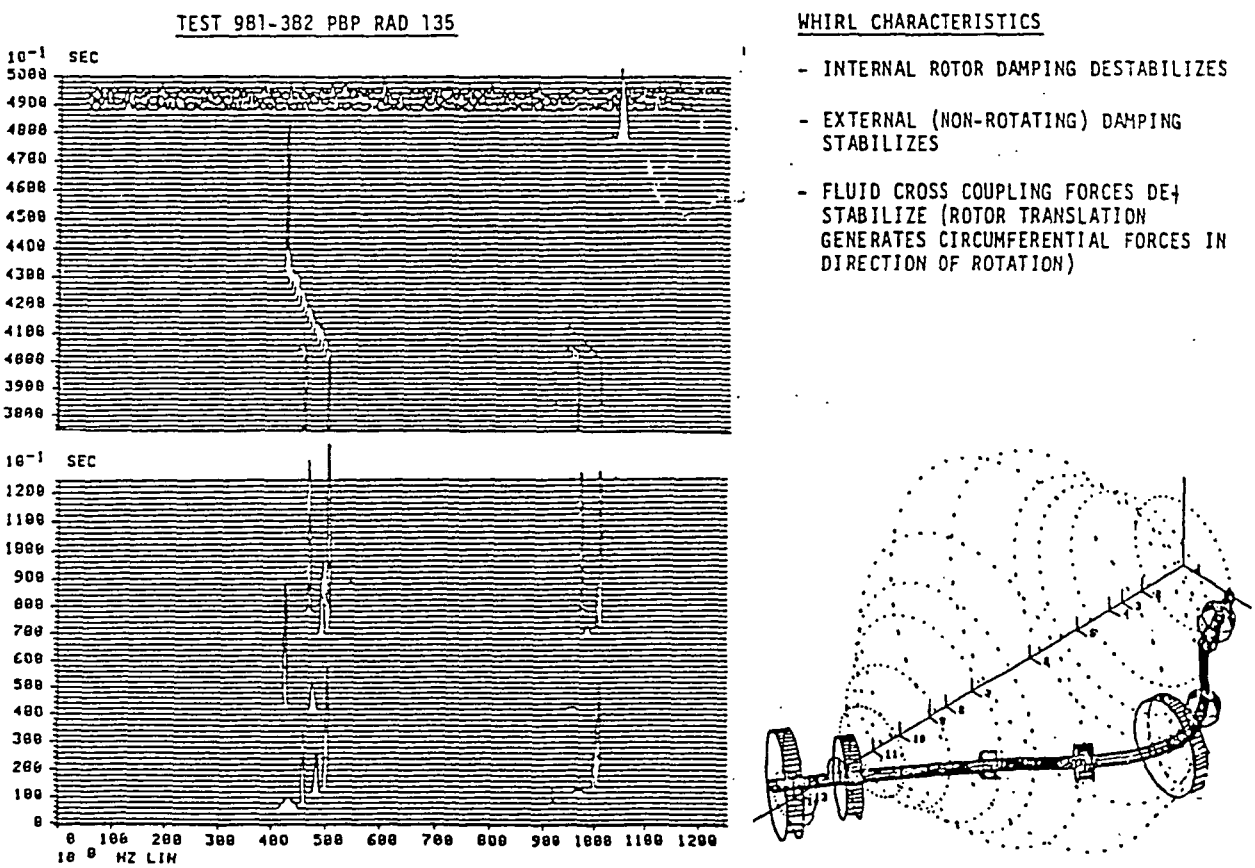

Fig. 11. Lox Pump External Acceleration Measurement.

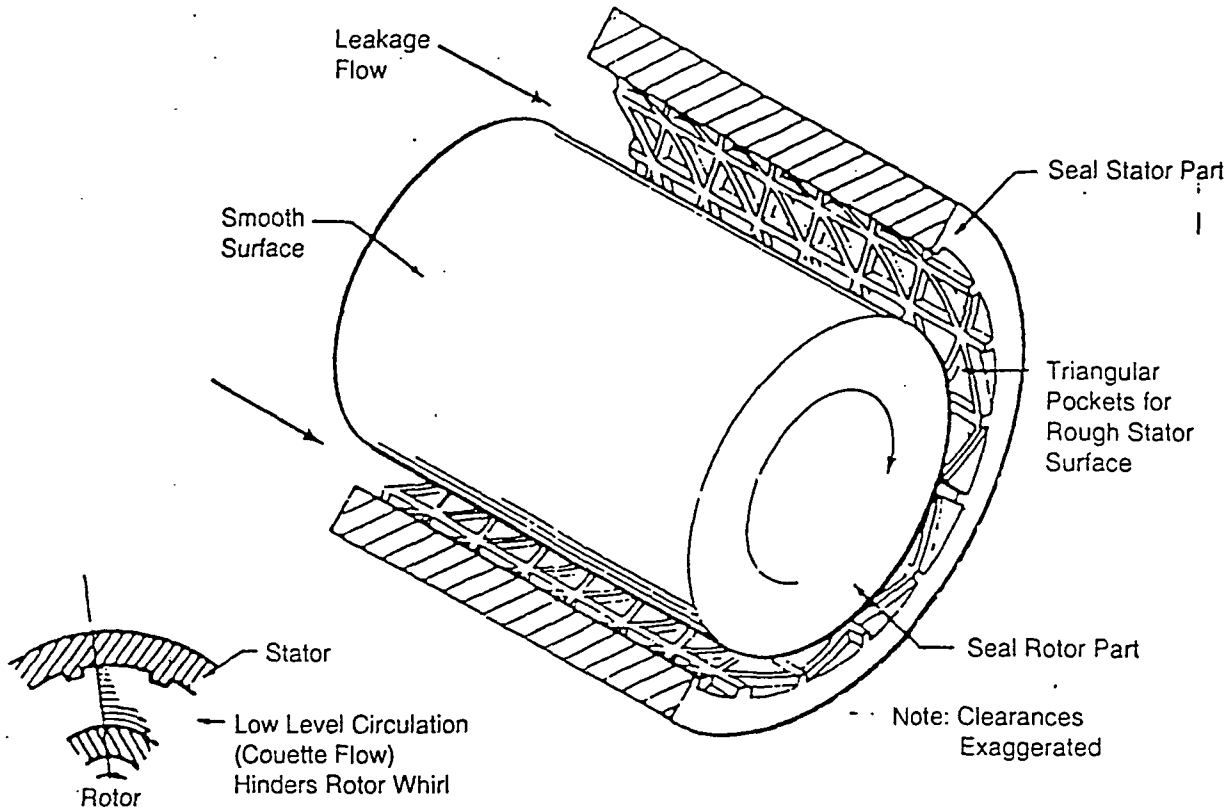

Fig. 12. Damping Seals.

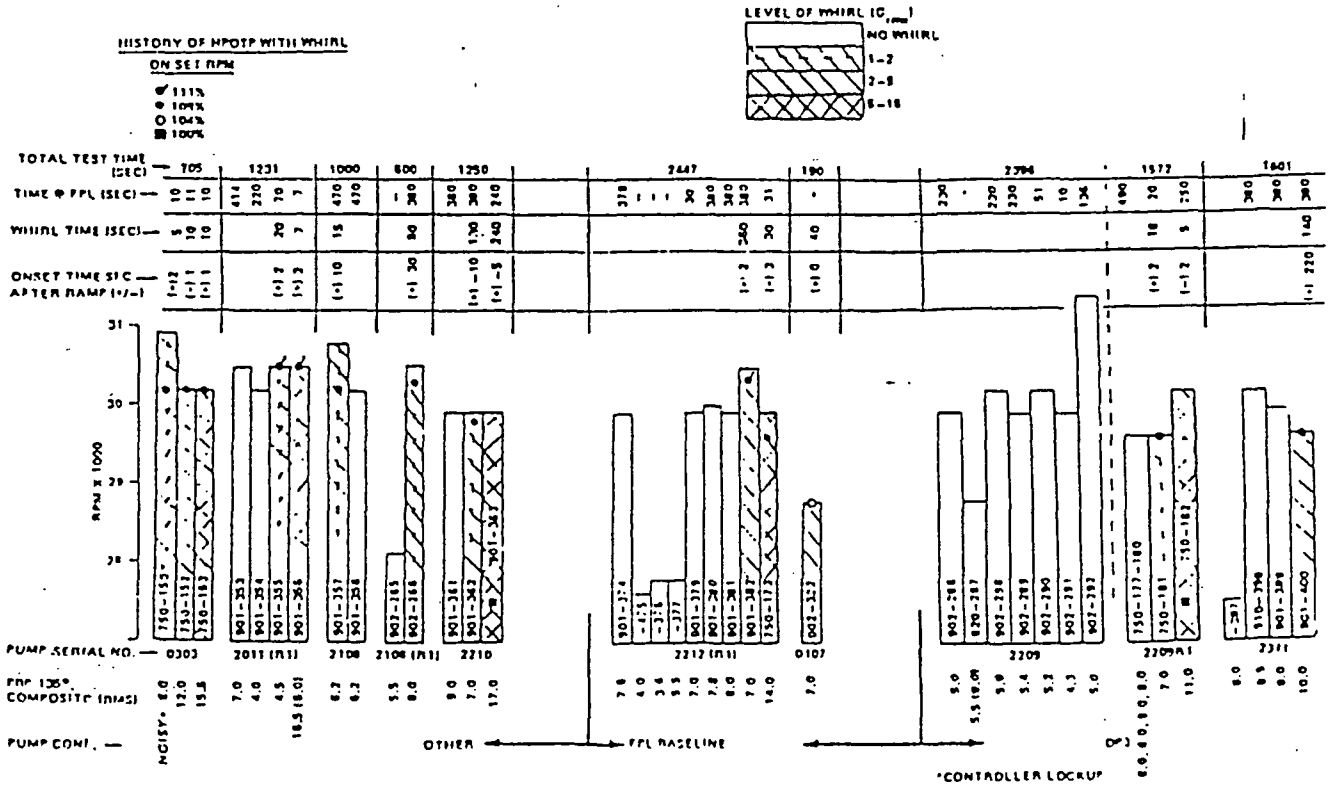

Fig. 13. Lox Pump Whirl History.

problem. The concept and development of hydrodynamic damping seals were the innovative solutions to whirl. George von Pragenau was the inventor.

Whirl is a very interesting and complex phenomenon. It is very destructive to the bearings, limiting life, and can lead to pump failures which could be catastrophic in nature. Although a classic problem, treated extensively in literature, the rotary dynamic elements of the shuttle are the first of the new breed of high-energy density, high-performance pumps. The high-pressure fuel pump, for example, develops a maximum of 75,000 hp in a space volume of a 1-ft diameter and 2-ft length and weighs approximately 250 lb. Future engine systems will extend rotordynamics technologies even further.

E. Hubble Space Telescope (1980's to Present)

The prime technology driver for the HST was the very high-pointing accuracy requirement. Several developments and breakthroughs occurred, including the understanding and verification of the modal characteristics for both pointing control during operations and accurate load predictions during ascent. Full-scale free-free dynamic tests were used in conjunction with dynamic impedance testing of the HST orbiter attach points. Impedance testing was a work-around that was successful for HST due to the simple characteristics of its trunion modes. Development is underway to attempt to broaden its application to more complex systems. This technology has led to the development of new testing techniques for space systems involving residual flexibility approaches.

During HST operations, a very interesting dynamic problem was experienced. In moving across the day-to-night or night-to-day terminator, the changing thermal conditions caused the solar array to snap, setting up low-frequency dynamic oscillations that affect the pointing accuracy. This effect was reduced by a control logic software change. During the repair mission, a new solar array was installed to eliminate this problem.

The history of aerospace/aeronautical engineering has therefore had its share of the manifestations of problems; however, the ingenuity, creativity, and common sense brought to these problems are our examples for the future. This same innovative approach used to solve these problems prevented many more problems than those that occurred. Problem prevention is a major thrust of the future.

III. THE PRESENT

In recent years, the major practices or thrusts in structural dynamics have been in the analytical and computational arenas. Mathematically, the structural dynamics field is well defined, notwithstanding that there are many open research areas. References 10 through 20 provide several examples. The solutions of dynamics response problems can usually be classified into three categories: (1) stability/instability, (2) transients, and (3) forced response. Control-augmented structures still fall into these categories. The present state of structural dynamics is partially characterized under the following topics.

A. State-of-the-Art Practices in Structural Dynamics

1. Finite Element Modeling. Numerous codes exist for finite element modeling that include a plethora of element types, and that treat both the dynamics and statics of the structure. Some nonlinear capability exists, as does fixed and animated graphics. Commercial codes such as NASTRAN, ANSYS, PATRAN, etc., are readily available and are universally used. Finite element modeling is the norm for working structural dynamics problems. Figure 14 summarizes the state-of-the-art in modeling.

2. Integrated Analysis. Although typically we still practice the "dumping it over the fence" approach from one discipline area to the other, strides have been made in integrated analysis approaches.[21] The effort that Ben Wada has led in "smart" or "adaptive" structures is one example. Also included are the works of Junkins and others[10] on structures/control interaction. Thermal, aeroelasticity, and structures/propulsion coupling (Pogo) are all examples, as is the launch vehicle loads analyses. Figure 15 is a matrix of launch design illustrating the current approach showing inputs and outputs from each area (Martin Marietta generated this chart).

3. Environments Definition/Verification. Great strides have been made in dynamic instrumentation, internal flow testing, acoustical testing, and CFD's. It is common today to have fairly accurate, statistically well-quantified environments for dynamic analysis. CFD is the standard tool for generating many of the environments. Data acquisition, data reductions and data basing, and electronic transfer are the norm (fig. 16).

4. Materials Characterization. Materials properties characterization is one key to good dynamic analysis. Most materials, including composites, have adequate definition of their properties, although some nonlinearities are still open to definition, and composite modeling must consider wider spread in materials properties.

5. Testing. Testing has made great strides. Various boundary conditions are feasible, using random, multi-random, sine, and time domain testing approaches. Data reduction of modal tests to analysis correlation and updating are coming into their own. Modal graphics and animation are great tools. Dynamic impedance or residual flexibility testing of interfaces saves time and dollars (fig. 16).

Structural Models	System Models	Fluid Models
Finite element method	Lagrangian dynamical equations	Bond Number
Energy theorems	Lagrange multipliers	Cruciform baffles
Generalized coordinates	Holonomic constraints	Rotary slosh
Virtual work	Complex eigenvalue problem	Fluid-structure coupling
Strain compatibility	Myklestad method	Flexible baffles
Calculus of variations	Displacement method	
Variational principles of mechanics	Acceleration method	
Potential theory	Dynamic load factor	
Principle of complementary energy	Dynamic magnification factor	
Configuration space	Orthogonality of mode shapes	
Bernoulli-Euler beam	Substructure methods	
Coulomb damping	Modal synthesis reduction methods	
Viscous damping	Inverse power eigenvalue method	
Structural damping	Subspace iteration eigenvalue method	
Discrete coordinates	Eigenvalue problem	
Flexibility versus stiffness method		
Galerkin versus Rayleigh-Ritz method		

Fig. 14. State-of-the-Art in Modeling.

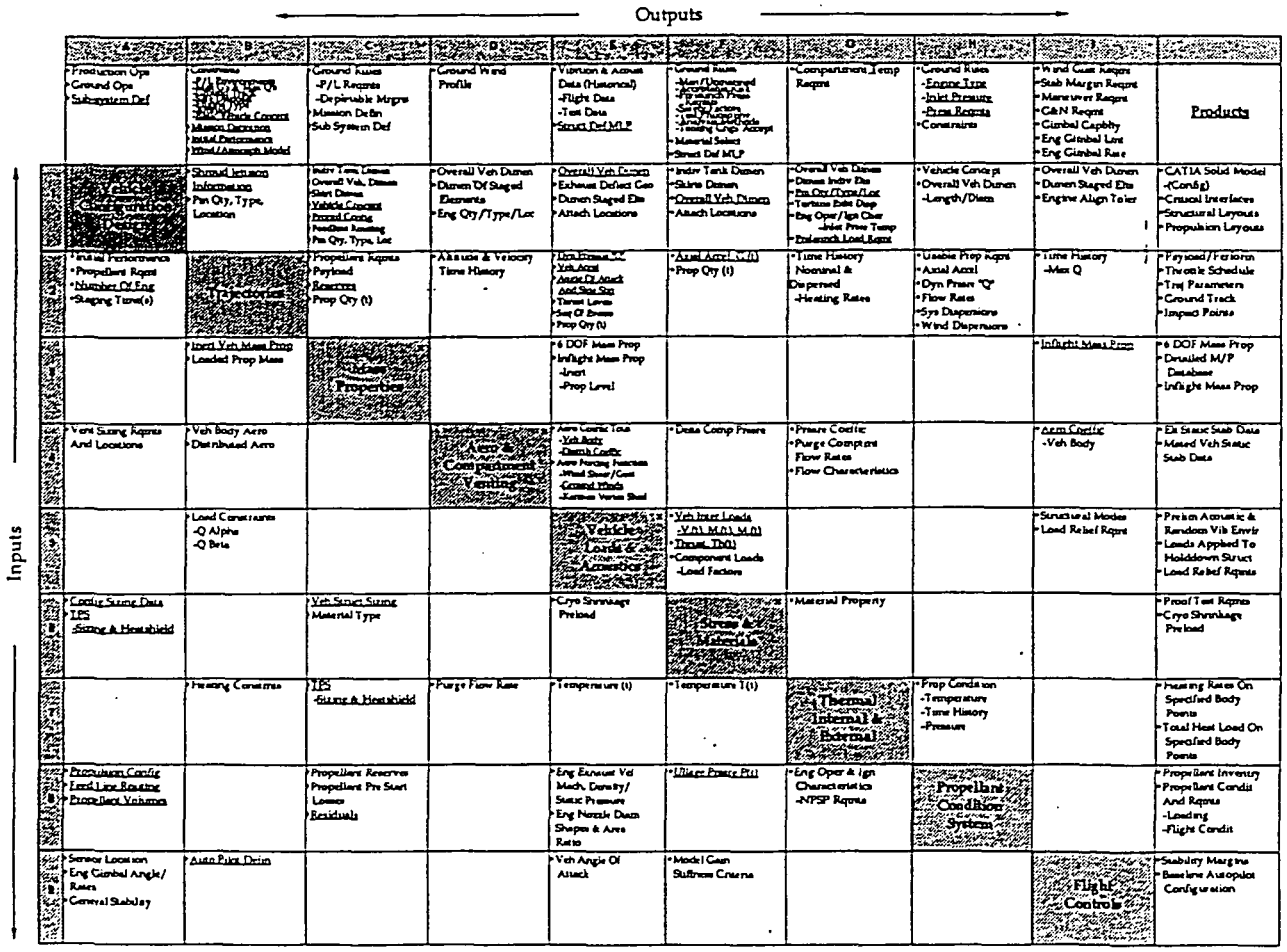

Fig. 15. Current Vehicle Design Matrix.

Configuration	Constraints	Excitation	Instrumentation	Processing
Fixed-base	Fixture cost	Normal mode	Load cells	DSP noise
Free-free	Boundaries	Step sine	Accelerometers	Measurements
Fixed-free	Technology	S/MP random	Strain gauges	Non-COH noise
STA	Facility cost	Impact	Rot. DOF	Nonlinear
Prototype	Accuracy	Twang	Low frequency	Standards
Scale	Environmental	Acoustic	Calibration	Networks
Impedance	Linearity		Signal cond.	
	Time invariant			
	Prop. Dmp.			
	Observable			

Fig. 16. Dynamic Testing Approaches.

This section has very briefly touched on the state-of-the-art practices in structural dynamics. The challenge comes in modeling and understanding and controlling all the interactions that produce dynamic response characteristics. It is advisable that we understand the process of structural dynamics assessment and design. It is only within this process that the structural dynamicist can be effective in plying his trade and influencing the design and operation of systems. The loads cycle is now used to illustrate the process.

B. The Process: Loads Cycle Example

The process of structural dynamics analysis and design is fairly straight forward. There are many common elements regardless of the task or project. The task or project determines the depths and complexity required. The common elements of any task include:

1. Developing element/subsystem structural dynamic models. Verify models with test.
2. Using the element/subsystem models to synthesize a system structural dynamics model. Verify models with test.
3. Develop all known environments, natural and induced, with expected uncertainties (includes forcing functions). Verify data with test.
4. Develop a system response model.
5. Run the response analysis.
6. Collate the response data into
   - Margins
   - Design data
   - Response envelopes
   - Statistical statements
7. Perform stress, fatigue, fracture, and stability analysis, using Item 6. Verify with test.
   - Design data
   - Verification
   - Operations.

Taking these into account, the loads cycle is an example of the dynamic analysis/test process. Figure 17 is a flow for a typical loads cycle. Notice that it contains the development and verification of the structural models, environment definitions, event definitions, inputs from other disciplines, etc. Notice, also, that the loads cycle is not completed until either a design requirement is generated, a design margin delineated (margin of safety, lifetime, fracture control), or operational procedures and constraints invoked.[20]

The simplified depiction of the space shuttle loads cycle process is shown in fig. 18, illustrating the blend required for a good product between analysis and testing. As good as analysis techniques have become, testing is still a requirement to verify assumptions, quantify data, and anchor or benchmark models.

So far, the loads cycle has been presented at a top level (fig. 19). Many variations are available to implement the overall plan. These include, but are not limited to:

Modeling
- Substructuring
- Craig Bampton reduction
- Finite element analysis
- Lump mass
- Equivalent structures
- Modal acceleration

Response
- All-up systems
- Base drive
- Monte Carlo
- A-factor
- Probabilistics
- PSD or random, deterministic linear, nonlinear

Environments
- Wind tunnel testing
- Internal flow testing
- Computational fluid dynamics
- Wind soundings
- Slender body theory.

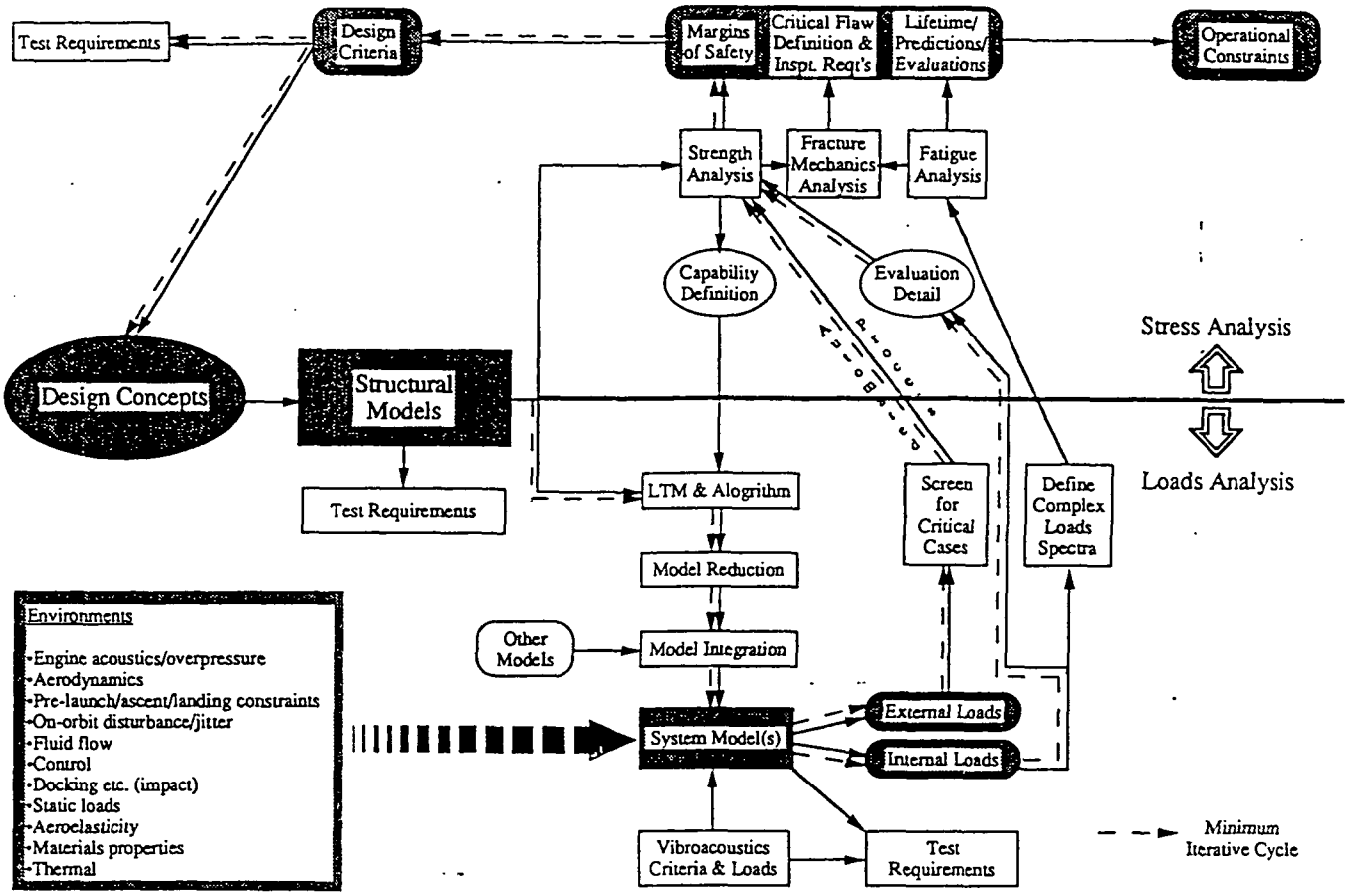

Fig. 17. Structural Analysis Flow.

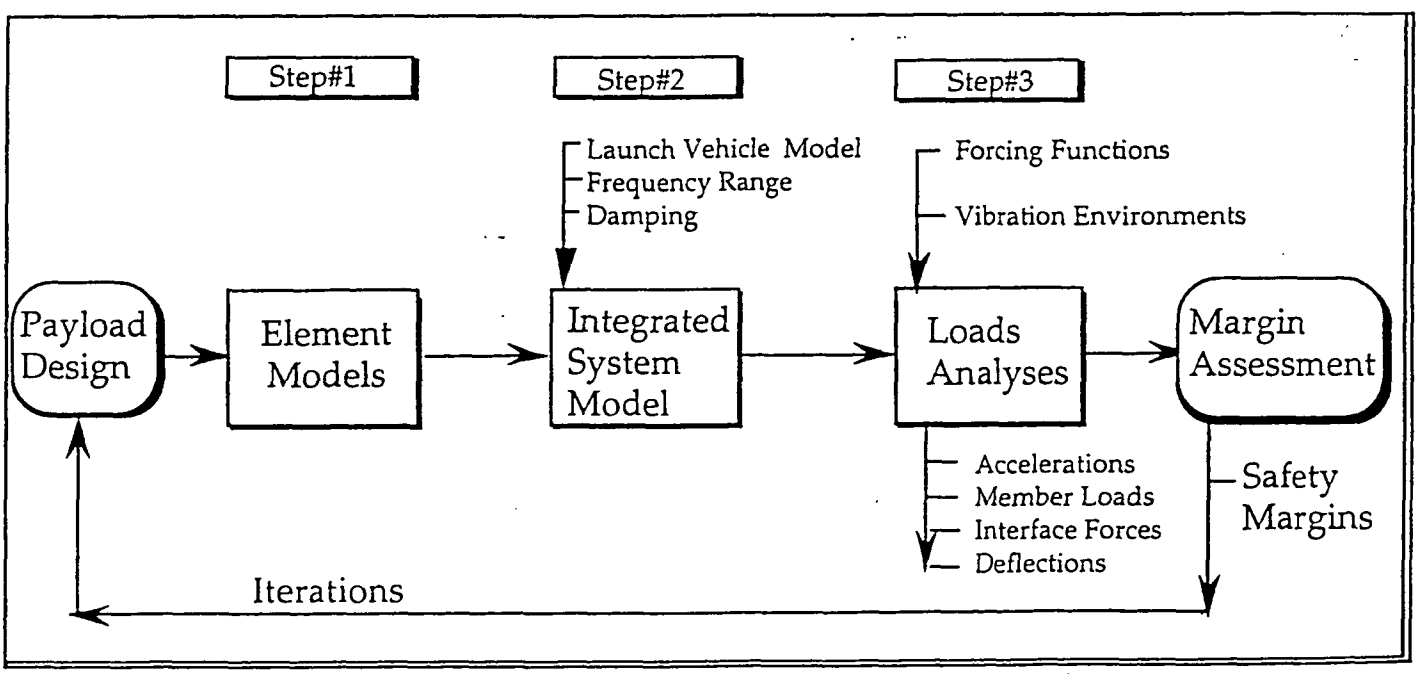

Fig. 18. Space Shuttle Loads Cycle.

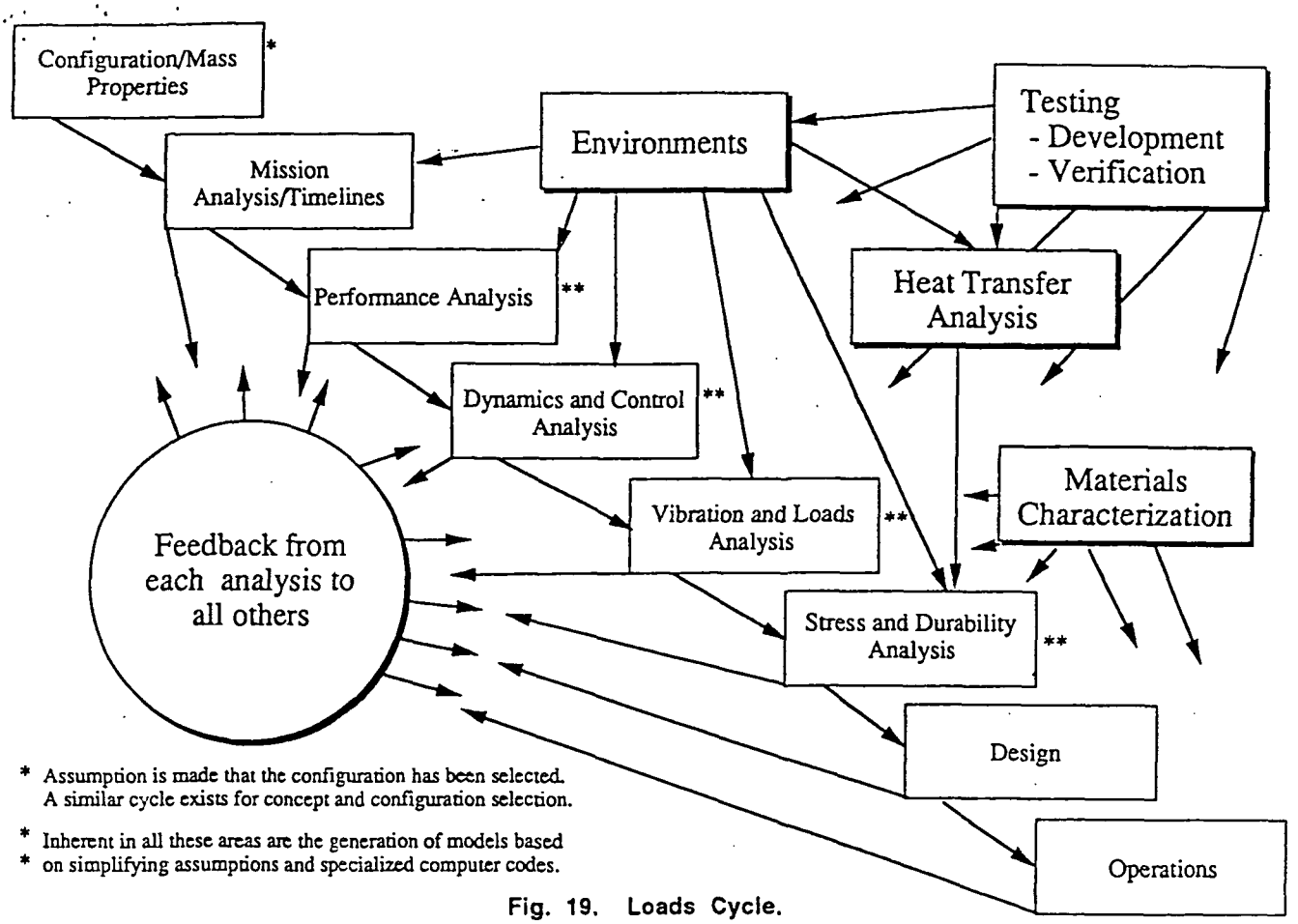

Fig. 19. Loads Cycle.

The engineers must select from these choices the combination that will best represent their problem. For example, when one is computing loads for a payload to fly on the space shuttle, the vehicle forcing functions are well known and can be applied to the integrated vehicle payload model to determine the payload loads and the orbiter-to-payload interface loads. Figure 20 is a flow diagram of this process showing each phase and the response analysis output.

The current problem is that the normal loads cycle is very complex, time consuming, computer intensive, and costly; however, the accuracy and, therefore, the structural efficiency has improved. The challenge is how to design, build, and operate robust systems at a greatly reduced cost without sacrificing reliability. Computational mechanics has reached the point where many tools are available, as has the testing world in structures, fluids, and aerodynamics. The challenge is to do the job more efficiently. Part of the answer lies in choosing levels of penetration commensurate with the sensitivities and margins/performance requirements of the system. In other words, include only the level of sophistication required to meet the mission and system requirements.

IV. WHERE DO WE GO? THE FUTURE: THE VISIONS AND THE THRUSTS

As has been discussed, great strides have been made in structural dynamics over the past 30 years (figs. 14 to 20). Finite element analysis is the norm. Interdisciplinary analysis is common in certain areas such as aeroelasticity, structural/control interaction, and hydroelasticity. Limited nonlinear tools are available for special problems, but they are not user-friendly or generally applicable. The effort Ben Wada has made to focus many interdisciplinary technologies under the "smart" or "adaptive structures" is a major forward thrust in that it is starting to consolidate and focus many separated technologies. To date, the focusing is the main contribution. In the future, this will lead to different and better defined technologies at the integration level, as well as applications. Loads analysis has greatly increased in technical scope and is more efficient. Load transformation matrices (LTM's) and stress transformation matrices (STM's) are coming into use by making the load cycle more efficient and by reducing design lead time and cost. Probabilistics approaches are widely used in some areas, but are not the norm for structural design—deterministic design is still the most acceptable and widely used practice. Structural dynamic testing of all size space systems is well established; however, testing of structures in low-g is very limited even though it is an important effect due to joint slop on structural frequencies. Passive and adaptive damping augmentation has met with success as has management techniques, system engineering, formal reviews, concurrent engineering, etc. Moving from this base there are many challenges that spring from our visions.

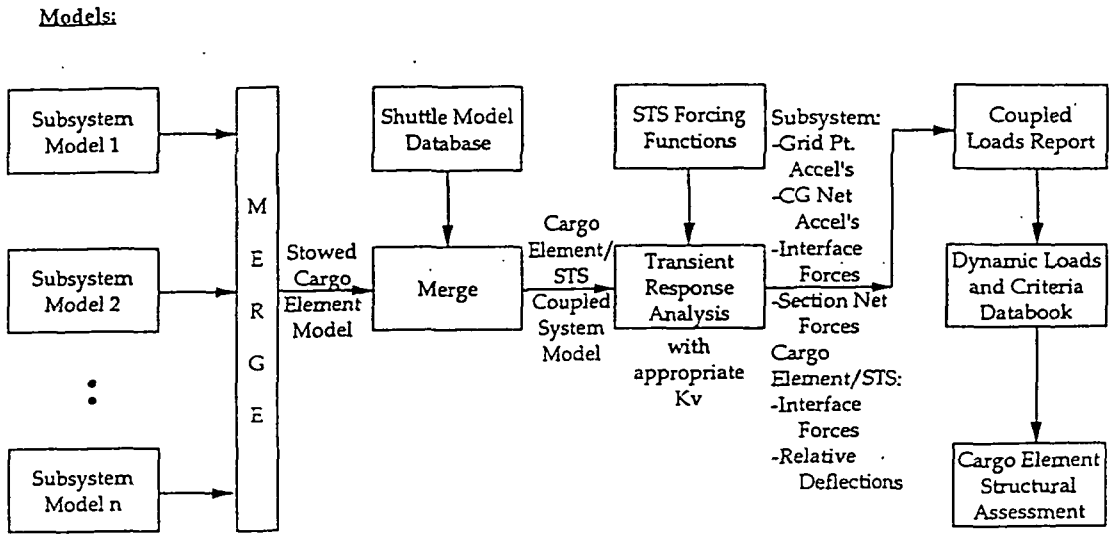

Fig. 20. Flow Chart of a Typical Load Cycle for Lift-Off and Landing.

- Structural dynamics, the epitome of what engineering/engineers can be
- Structural dynamics and dynamicists, the foundation of future space and aeronautics systems
- Indepth technical knowledge and specialists in structural dynamics
- Efficient structural dynamic system with well-controlled responses at low costs
- The pacesetter in integration and interdisciplinary analysis and design
- The innovators/leaders of new aerospace and aeronautics exploration and products
- United States, the forerunner in aerospace and aeronautics
- Structural dynamicists setting the standards in electronic communication and data basing.

Fig. 21. Visions.

A. Visions

I envision many great and exciting things ahead. I see structural dynamicists as the epitome of the best an engineer can be, and thus the foundation of future space and aeronautical systems. I see indepth technical expertise in all the subdisciplines of structural dynamics, as well as the overall discipline. I see lower cost, efficient structural systems that have dynamics understood, mastered, and controlled. I see interdisciplinary analysis where the structural dynamics is leading, ensuring communication, data interfaces, etc. I see exploration of space and aeronautics establishing forever our nation and this society as the forerunner, the pace setter. I see structural dynamicists not just collecting knowledge, as important as knowledge is, but as contributing significant value to the aerospace and aeronautic products of the industry future; not in a status quo, but in an evolutionary way (fig. 21).

If these visions are to come true, then several thrusts must be pursued. A discussion of these thrusts follows.

B. Thrusts

Thrust #1. Interdisciplinary Approaches. All space systems operate as a group of interacting disciplines, components, and subsystems. This interaction dictates that structural dynamicists must understand, integrate, and communicate these various disciplines. Techniques to determine sensitivities (key parameters) must be further developed. Codes and programs must be multidisciplinarily oriented, requiring the various specialists to work together on their codes (figs. 22A and 22B).

In the past, this interaction has been carried out in one of three ways: (1) The output of one discipline is sent to another discipline, with everything coming together with the stress or design discipline or the project (dumping over the fence is the norm). (2) The current codes are integrated using a management code to create the output/input interactions and to combine them to achieve some reference value. These are inefficient approaches because big programs (codes) are not efficient in this mode of talking to each other with the management code being basically a traffic cop. (3) The combined describing equations are written, then the

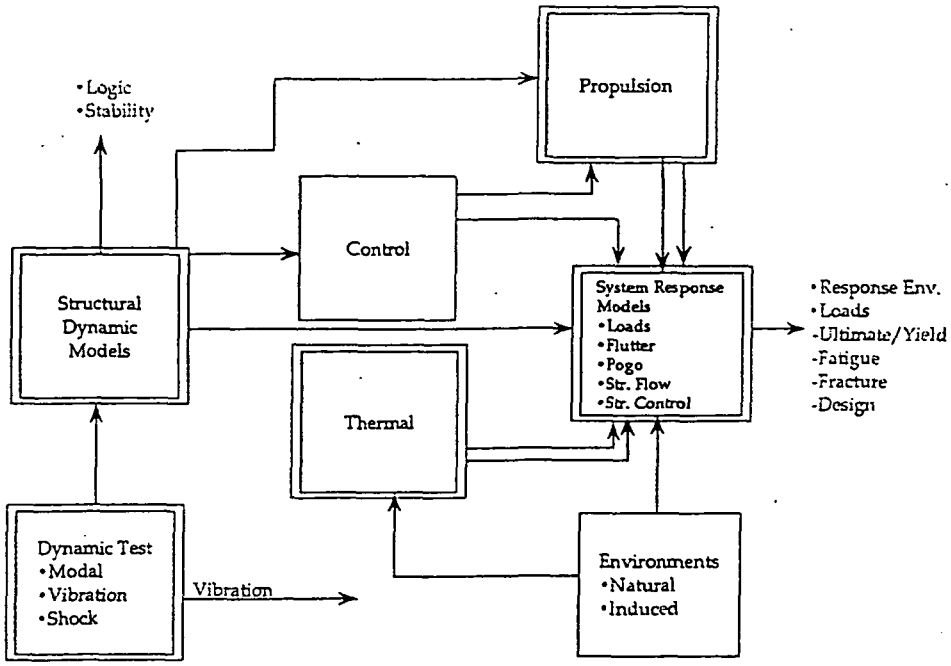

Fig. 22A. Interactive Analysis.

- "Smart/Adaptive" structures focus
- Integrated system equations instead of integrated computer programs and data transfer
- Focusing cost and reliability into the integrated design
- System focus from the structural dynamicists specialists viewpoint—learning sometimes about the other specialists
- Robustness/reduce sensitivities
- Gathering of field or experimental data and its use directly as a basis for design, verification, and operation
- Further development of loads and stress transformation matrices, etc.
- Greatly reduced loads cycle time (stress transformation, etc.)
- Transient time consistent instead of equivalent static loads
- Optimization of minimum weight and higher performance, lower cost, and design cycle time
- Reusability
- Damage tolerant
- Health monitoring
- Design criteria

Fig. 22B. Thrust #1. Interdisciplinary Approaches.

code is developed. This has been demonstrated by Dr. Roy Sullivan for the Redesigned Solid Rocket Motor (RSRM) ablative nozzle erosion problem (figs. 23 and 24). The world of aeroelasticity has also used this approach. Effort needs to be expended in the future to extend the approach used for the RSRM nozzle and aeroelasticity to other basic structures and structural dynamic problems. The shopping list for integrated

analysis is: systems analytical processes, structures, fluids, propulsion, thermal, aerodynamics, control, design, dynamics, stress, and acoustics, to name a few. The loads cycle is a particular area that must focus on greatly reducing the cycle time. Stress transformation matrices coupled with other innovations are required.

This scenario reflects the enormity, complexity, and sensitivity of the task from technical, computational, and management viewpoints. The paradox is that high-quality systems require the structural dynamicists to be indepth specialists, and yet they must be generalists and be able to work integrated system design.

Thrust #2. Probabilistics. Probabilistics is another tool or approach the structural dynamicist has in his kit (figs. 25 and 26). It allows an excellent tool for sensitivity analysis and can be used to obtain more efficient structures. The future thrust is threefold:

1. User-friendly analysis tools

2. Physical reality symbols/parameters that combine logically with baseline parameters

3. Failure data bases

4. Practical applications/usage

5. Probability design criteria including system hierarchy (levels).

Finite Elements - a mathematical tool for solving differential equations numerically

Example: Two-Dimensional, Transient Heat Flow Problem

$L_1(T)$ on Γ_1

Applying the finite element method to this problem yields the matrix equation:

$$\rho c \frac{\partial T}{\partial t} = \frac{\partial}{\partial x}\left(k \frac{\partial T}{\partial x}\right) + \frac{\partial}{\partial y}\left(k \frac{\partial T}{\partial y}\right)$$

$$[C]\frac{d}{dt}\{T\} + [K]\{T\} = \{f\}$$

The solution to this matrix equation over time yields $\{T\}$ at every time step where $\{T\}$ is the vector of temperatures at every point in the body.

So the finite element method allows one to convert a physical problem with complicated geometries and boundary conditions to a matrix equation which a computer can solve.

Fig. 23. Finite Element Approach.

The governing differential equations are solved simultaneously at each time step through solution of a matrix equation of the form:

$$\begin{bmatrix} 0 & 0 & 0 & 0 \\ 0 & 0 & 0 & 0 \\ PX & PY & S & TP \\ 0 & 0 & 0 & TS \end{bmatrix} \frac{d}{dt}\begin{Bmatrix} u_x \\ u_y \\ p \\ T \end{Bmatrix} + \begin{bmatrix} KX & KXY & LX & TX \\ KYX & KY & LY & TY \\ 0 & 0 & H & 0 \\ 0 & 0 & 0 & TR \end{bmatrix} \begin{Bmatrix} u_x \\ u_y \\ p \\ T \end{Bmatrix} = \begin{Bmatrix} f_1 \\ f_2 \\ f_3 \\ f_4 \end{Bmatrix}$$

1) Solution yields $\{u_x, u_y, p, T\}^T$ at the present time step.

2) Coefficients in the matrices and in the force vector are updated based upon the current values for p, T and degree of char c.

3) Time increment is added and the solution is performed for the next time step.

Fig. 24. Solving Governing Differential Equations.

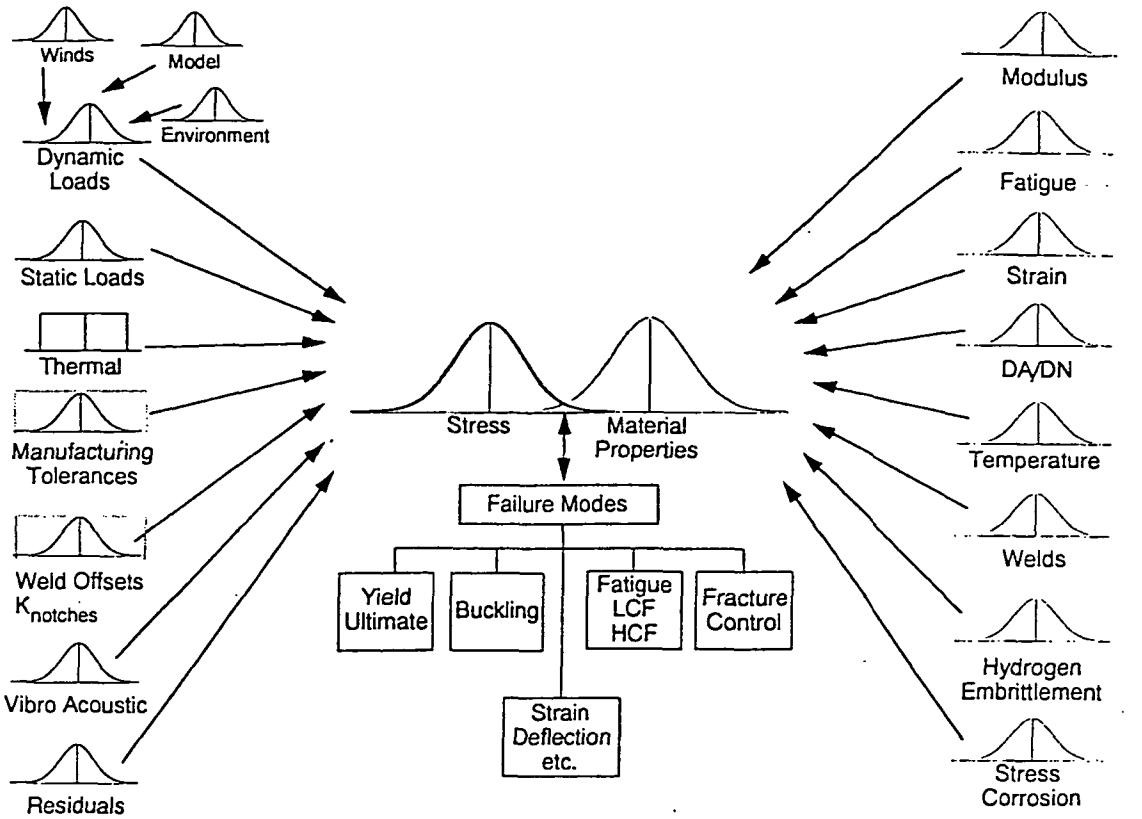

Fig. 25. Probabilistic Analysis Concept.

- User-friendly tools development
- Failure data base development
- Physical reality symbols/parameters that combine logically with baseline parameters
- Practical application/usage
- Damage tolerance and fracture

Fig. 26. Thrust #2. Probabilistics.

Thrust #3. Smart/Adaptive Structures. Controlling the response of structures is the key task of structural dynamicists, whether one is dealing with Pogo, aeroelasticity, control, vibration, etc. In the past, this has been accomplished by changing the structural design (loads paths, stiffness, geometry, etc.). Structural control feedback, passive damping, structure with memory, piezoelectric, sensors, digital control systems, and other advances have opened up the solution potentials. In some cases, these potentials provide better response, but at the cost of complexity and more introduced failure modes. Obviously smart/adaptive structures will play a major role in the future and must be actively pursued. To help develop this thrust, certain steps, shown in fig. 27, must occur.

The paradox is that the future requires lower dynamic response with less failure (higher reliability), yet these response control techniques introduce more failure modes.

- Interdisciplinary tools/technology enhancement (thrust #1)
  - Autonomous control
  - Health monitoring
  - Sensitivities
  - Failure modes
  - Reliability
  - Cost
- Further development of active and passive concepts for controlling dynamic responses
- Knowledge base learning control system
- Intelligent systems

Fig. 27. Thrust #3. Smart/Adaptive Structures.

Thrust #4. Rotordynamics. Rotordynamics is probably the most complex problem structural dynamicists face. In high-performance turbomachinery such as the SSME where the performance is very high and the operating environments extreme, rotordynamics reaches the pinnacle of complexity. Not only must instabilities such as whirl and disk modes be avoided, but vibration levels and bearing life is an issue while maintaining high performance at low weights and sizes. Hydrodynamic forces are hard to predict and verify, and structural models are very complex, being multidimensional and dynamically coupled with the pump speed. The thrust for future launch systems requires the extension of rotordynamic technology including the items listed in fig. 28.

- Nonlinear dynamic modeling
  - Bearings
  - Seals
  - Hydrodynamics
  - Structural dynamics
- Hydrodynamic and gas dynamic forces
- Rotor support technology
  - Balls
  - Roller
  - Hydro
  - Foil
  - Magnetic
- Damping augmentation
- Optimization design (interdisciplinary)
- Dynamic testing
- Special instrumentation to verify dynamic environments and responses
- Health monitoring
  - Sensors
  - Logic
  - Data bases

Fig. 28. Thrust #4. Rotordynamics.

Thrust #5. Low-Cost Structures. With emphasis on cost in future systems, structural dynamicists must bring another parameter into their design equation. Not only must they deal with the technical aspects of the problem, but how their solutions relate to cost. The challenges future thrust must face are shown in fig. 29.

- Cost metrics development
- Procedures and tools for tending technical and costs simultaneously
- Cost as a part of concept selection and early design
- Development of dynamic system plan for dynamic design
- Phases and review techniques to expedite (increased efficiency, short cycle time) analysis and testing during project development
- Design for robustness

Fig. 29. Thrust #5. Low-Cost Structures.

Thrust #6. High-Efficiency Structures. Future launch systems such as single stage to orbit dictate that primary structures be more efficient (lighter weight). This means the use of different materials that may not have the normal detailed characterization. Structural dynamicists will have to deal with a larger materials uncertainty and lower frequencies while controlling more accurately the dynamic response and desensitizing where possible. They have the job of making the system robust/insensitive to dynamic excitation with high reliability (fig. 30). High-performance structures may be achieved by material selection (high-specific strength and module), reliability criteria, and joint efficiency.

- Tools to handle larger data tolerances/uncertainties
- Robustness/desensitizing structures to dynamic perturbations
- Smart/adaptive structures
- Health monitoring
- Ability to handle more modes, lower frequencies

Fig. 30. Thrust #6. High-Efficiency Structures.

Thrust #7. Testing Criteria and Approaches. Understanding the structural dynamics characteristics of future aerospace systems is one of the keys to successful systems. It strongly impacts control system design, aeroelastic design, loads and stress, and thus structural design, Pogo, and all other dynamic responses. This future thrust dictates that criteria founded on firm physical theory be formulated on when and what to test, and that alternate testing approaches be developed in order to more efficiently and accurately determine dynamic characterization. Microgravity effects are a key area and are difficult if not impossible to accomplish on the ground. In particular, it is important for fluid dynamics, tolerance (manufacturing) effects on structural dynamics, and microgravity isolation of low-g experiments. The latter are designs that will isolate experiments from crew motion or spacecraft maneuvers. Figure 31 summarizes this future.

- Alternate more efficient testing techniques
  - Residual flexibility
  - Perturbated boundaries
  - Onorbit
- Instrumentation
  - Remote
  - Rotational DOF
  - dc frequency response
  - Low mass
- Low-frequency suspension (0-g simulation)
- Standards/techniques model update/analysis to test correlation
- Microgravity vibration isolation

Fig. 31. Thrust #7. Testing Criteria.

Thrust #8. Leadership. I am fully aware that leadership is not for all of us. However, we must develop to the fullest our leadership, taking advantage of every tool, challenge, and opportunity set before us. Leadership recognizes that new technologies introduce changes in many subtle but important ways. Leadership inspires, educates, and expands its technologies and processes to grow with impending changes. Only to the degree that we accept leadership will visions materialize (fig. 32).

- Vision-based
- People-oriented
- Communication-focused
- Delegation with authority

Fig. 32. Thrust #8. Leadership.

Thrust #9. Enhancement of Human Imagination/ Creativity. The only true resource we have to ensure the future is the human resource of imagination and creativity. Structural dynamicists have the edge here. It is mandatory that we continue this thrust individually and corporately to enhance this resource. It is the key that unlocks the future. That is what this meeting is all about.

V. CONCLUSIONS

The thrust areas that have been listed have special appeal to us who are the specialists, yet they are not the only challenges before us. Many of the future challenges are paradoxical in form. Although not easy to verbalize, a summary list is attempted in fig. 33.

In summary, knowledge is still the leverage of the future. The future is ours to claim and broadcast as we are doing here. I believe that we will catch the visions, focus the thrusts, and claim the future.

- Higher performance with robustness
- Structural and propulsion system efficiency with high performance at lower cost
- Dynamic interactive complexity designed using limited criteria and standards
- Indepth technical expertise selectively applied while being a specialist, a generalist, a team player
- Structural response control with higher reliability (control implies the introduction of additional failure modes)
- High performance, high reliability, low cost

Fig. 33. Future Challenges.

REFERENCES

1. Quotes from an uncoverable source.
2. Pye, D.: "The Nature of Design." Reinhold Book Corporation, New York, 1969.
3. Ryan, R.S.: "Problems Experienced and Envisioned for Dynamical Physical Systems." NASA TP 2508, August 1985.
4. Ryan, R.S.: "Practices in Adequate Structural Design." NASA TP 2892, January 1989.
5. Ryan, R.S.: "The Role of Failure/Problems in Engineering: A Commentary on Failures Experienced—Lessons Learned." NASA TP 3213, March 1992.
6. Ryan, R.S., Mowery, D.K., and Tomlin, D.D.: "The Dynamic Phenomena of a Tethered Satellite." NASA TP 3347, May 1993.
7. O'Neal, P.: "The Splendid Anachronisms of Huntsville." *Fortune* Magazine, June 1962.
8. Lovingood, J.A.: "A Technique for Including the Effects of Vehicle Parameter Variations in Wind Response Studies." NASA TM X-53042, May 1964.
9. Childs, D.W.: "The Space Shuttle Main Engine High Pressure Fuel Turbopump Rotordynamic Instability Problem." Transactions of the ASME, vol. 100, January 1978, pp. 48-57.
10. Junkins, J.L. and Kim, Y.: "Introduction to Dynamics and Control of Flexible Structures." AIAA Education Series, AIAA, Inc., Washington DC.
11. Greenwood, D.T.: "Classical Dynamics." Prentice-Hall, Inc., Englewood Cliffs, NJ, 1977.
12. Meirovitch, L.: "Analytical Methods in Vibrations." Macmillan Company, Toronto, Canada, 1967.
13. Meirovitch, L.: "Elements of Vibration Analysis." Second Edition, McGraw-Hill Book Company, New York, NY, 1986.
14. Meirovitch, L.: "Dynamics and Control of Structures." John Wiley, & Sons, New York, NY, 1990.
15. Junkins, J.L. and Turner, J.D.: "Optimal Spacecraft Rotational Maneuvers." Studies in Astronautics, vol. 3, Elsevier Scientific Publishing Company, New York, NY, 1985.
16. Craig, R.R. Jr.: "Structural Dynamics—An Introduction to Computer Methods." John Wiley & Sons, New York, NY, 1981.
17. Reddy, J.N.: "An Introduction to the Finite Element Method." McGraw-Hill Book Company, New York, NY, 1984.
18. Meirovitch, L.: "Computational Methods in Structural Dynamics." Sijthoff & Noordhoff, Leyden, The Netherlands, 1980.

19. Lee, S. and Junkins, J.L.: "Explicit Generalizations of Lagrange's Equations for Hybrid Coordinate Dynamical Systems." Department of Aerospace Engineering, Technical Report AERO 91-0301, Texas A&M University, College Station, TX, March 1991.

20. Meirovitch, L.: "Hybrid State Equations of Motion for Flexible Bodies in Terms of Quasi-Coordinates." AIAA Journal of Guidance, Control, and Dynamics, vol. 14, No. 5, 1991, pp. 1008-1013.

21. Ryan, R.S.: "Structural Design/Margin Assessment." NASA TP 3410, September 1993.