NASA/TM—2001-210898



The New Cloud Absorption Radiometer (CAR) Software: One Model for NASA Remote Sensing Virtual Instruments

Don J. Roth
Glenn Research Center, Cleveland, Ohio

David A. Rapchun
Global Science and Technology, Inc., Greenbelt, Maryland

Hollis H. Jones
Goddard Space Flight Center, Greenbelt, Maryland

May 2001

The NASA STI Program Office . . . in Profile

Since its founding, NASA has been dedicated to the advancement of aeronautics and space science. The NASA Scientific and Technical Information (STI) Program Office plays a key part in helping NASA maintain this important role.

The NASA STI Program Office is operated by Langley Research Center, the Lead Center for NASA's scientific and technical information. The NASA STI Program Office provides access to the NASA STI Database, the largest collection of aeronautical and space science STI in the world. The Program Office is also NASA's institutional mechanism for disseminating the results of its research and development activities. These results are published by NASA in the NASA STI Report Series, which includes the following report types:

- TECHNICAL PUBLICATION. Reports of completed research or a major significant phase of research that present the results of NASA programs and include extensive data or theoretical analysis. Includes compilations of significant scientific and technical data and information deemed to be of continuing reference value. NASA's counterpart of peer-reviewed formal professional papers but has less stringent limitations on manuscript length and extent of graphic presentations.

- TECHNICAL MEMORANDUM. Scientific and technical findings that are preliminary or of specialized interest, e.g., quick release reports, working papers, and bibliographies that contain minimal annotation. Does not contain extensive analysis.

- CONTRACTOR REPORT. Scientific and technical findings by NASA-sponsored contractors and grantees.

- CONFERENCE PUBLICATION. Collected papers from scientific and technical conferences, symposia, seminars, or other meetings sponsored or cosponsored by NASA.

- SPECIAL PUBLICATION. Scientific, technical, or historical information from NASA programs, projects, and missions, often concerned with subjects having substantial public interest.

- TECHNICAL TRANSLATION. English-language translations of foreign scientific and technical material pertinent to NASA's mission.

Specialized services that complement the STI Program Office's diverse offerings include creating custom thesauri, building customized data bases, organizing and publishing research results . . . even providing videos.

For more information about the NASA STI Program Office, see the following:

- Access the NASA STI Program Home Page at ***http://www.sti.nasa.gov***

- E-mail your question via the Internet to help@sti.nasa.gov

- Fax your question to the NASA Access Help Desk at 301–621–0134

- Telephone the NASA Access Help Desk at 301–621–0390

- Write to:
  NASA Access Help Desk
  NASA Center for AeroSpace Information
  7121 Standard Drive
  Hanover, MD 21076

NASA/TM—2001-210898



The New Cloud Absorption Radiometer (CAR) Software: One Model for NASA Remote Sensing Virtual Instruments

Don J. Roth
Glenn Research Center, Cleveland, Ohio

David A. Rapchun
Global Science and Technology, Inc., Greenbelt, Maryland

Hollis H. Jones
Goddard Space Flight Center, Greenbelt, Maryland

National Aeronautics and
Space Administration

Glenn Research Center

May 2001

Acknowledgments

The CAR Virtual Instrument was directed and paid for by Dr. Michael D. King with funds provided by the MODIS Science Team, the EOS Project Science Office, and NASA's Radiation Science Program. The project was done under the management of Peter Shu, Chief, Director Systems Branch, NASA Goddard Space Flight Center.

Trade names or manufacturers' names are used in this report for identification only. This usage does not constitute an official endorsement, either expressed or implied, by the National Aeronautics and Space Administration.

Available from

NASA Center for Aerospace Information
7121 Standard Drive
Hanover, MD 21076

National Technical Information Service
5285 Port Royal Road
Springfield, VA 22100

Available electronically at http://gltrs.grc.nasa.gov/GLTRS

THE NEW CLOUD ABSORPTION RADIOMETER (CAR) SOFTWARE: *ONE MODEL FOR NASA REMOTE SENSING VIRTUAL INSTRUMENTS*

Don J. Roth
National Aeronautics and Space Administration
Glenn Research Center
Cleveland, OH 44135

David A. Rapchun
Global Science and Technology, Inc.
Greenbelt, MD 20770

Hollis H. Jones
National Aeronautics and Space Administration
Goddard Space Flight Center
Greenbelt, MD 20771

ABSTRACT

The Cloud Absorption Radiometer (CAR) instrument has been the most frequently used airborne instrument built in-house at NASA Goddard Space Flight Center, having flown scientific research missions on-board various aircraft to many locations in the United States, Azores, Brazil, and Kuwait since 1983. The CAR instrument is capable of measuring scattered light by clouds in fourteen spectral bands in UV, visible and near-infrared region. This document describes the control, data acquisition, display, and file storage software for the new version of CAR. This software completely replaces the prior CAR Data System & Control Panel with a compact and robust **virtual instrument** computer interface. Additionally, the instrument is now useable for the first time for taking data in an off-aircraft mode. The new instrument is controlled via a LabVIEW v5.1.1-developed software interface that utilizes 1) serial port writes to write commands to the controller module of the instrument and 2) serial port reads to acquire data from the controller module of the instrument. Step-by-step operational procedures are provided in this document. A suite of other software programs has been developed to complement the actual CAR virtual instrument. These programs include: (1) a simulator mode that allows pre-testing of new features that might be added in the future, as well as demonstrations to CAR customers, and development at times when the instrument / hardware is off-location and (2) a post-experiment data viewer that can be used to view all segments of individual data cycles and to locate positions where 'start' and 'stop' byte sequences were incorrectly formulated by the instrument controller. The CAR software described here is expected to be the basis for CAR operation for many missions and many years to come.

DEFAULT CONFIGURATION

1. CPU - Intel Pentium III, 600 MHz
2. Operating System - Windows NT4.0
3. RAM - 256MB
4. Software - LabVIEW v5.1.1
5. Additional Software: (see National Instruments Web Site, KnowledgeBase Document ID: 18QGBH0O entitled "How Do I set Individual Bits for the Parallel Data Port Using LabVIEW?") Any computer that runs the CAR software with Windows NT4.0 must also have the 'AccessHW.zip' installed to make direct access to memory available on NT. After downloading 'AccessHW.zip' and unzipping, run setup.exe and the installation wizard will guide the system integrator through.

6. System Password: car
7. Default File Locations:
   - CAR.EXE program: D:\car\car.exe
   - Calibration data: D:\car\calibration1.ini
   - Data File: D:\car\level-0*.bin

SOFTWARE OVERVIEW

The concept of virtual instrumentation has been pioneered by National Instruments with their innovation of the LabVIEW software language in the same year (1983) that CAR was born. LabVIEW allows one to transform a real instrument such as an oscilloscope into a software-based instrument that is completely controllable from a computer keyboard, mouse and monitor. Control panels developed in LabVIEW and displayed on a computer monitor imitate instrument panels in terms of switches, buttons, and displays. All programming is done via a block diagram consisting of wires and icons that represent blocks of c code. LabVIEW has developed a rabid following worldwide for physics applications and process control. The version of LabVIEW used in the development of the new CAR instrument is v5.1.1. The operating system used is Windows NT v4.0, chosen for its stability and increased speed (vs. Win98) of LabVIEW execution (The latter was empirically demonstrated.)

The code is fairly sophisticated utilizing significant numbers of shift registers to recirculate information, attribute nodes to control display attributes, and local variables for initialization and for operation control where needed. Two main while loops operating at different speeds are employed in the source code: one controlling serial command writes and one controlling serial data reads. The loop controlling serial command writes is essentially in a wait state (polling occurs every 100 msec) until triggered by one of the commands (e.g. change of Dwell Setting). The loop controlling serial data reads checks for the predefined number of character bytes representing a whole data cycle's worth of information to have arrived at the serial port before executing. If the predefined number of bytes has not arrived at the read serial port, the loop waits until the next 5 msec multiple (plus 1 extra msec) before checking again.

For all parts of the code, subVIs were used when possible. In general, sequence structures were not employed in order to allow the programmers to observe the dataflow from left-to-right. The serial data read while loop, however, is quite large due to the need to access all controls (including subsidiary controls discussed in Appendix A) from the main panel as the code was built up over time with new requirements. Additionally, the need to exchange data between the two loops via local variables, the desire to avoid global variables (which can lead to race conditions and reduce speed), and the significant number of attribute nodes employed contributed to the large size of the serial data read while loop as well. At the same time, we attempted to minimize the use of local variables as is dictated by good LabVIEW programming practice, but this increased the amount of wiring needed across the serial read while loop. The code maintainer will need to use the panning tool and scroll bars to view the code on monitors of normal resolution. A copy of the source code is included at the end of the document.

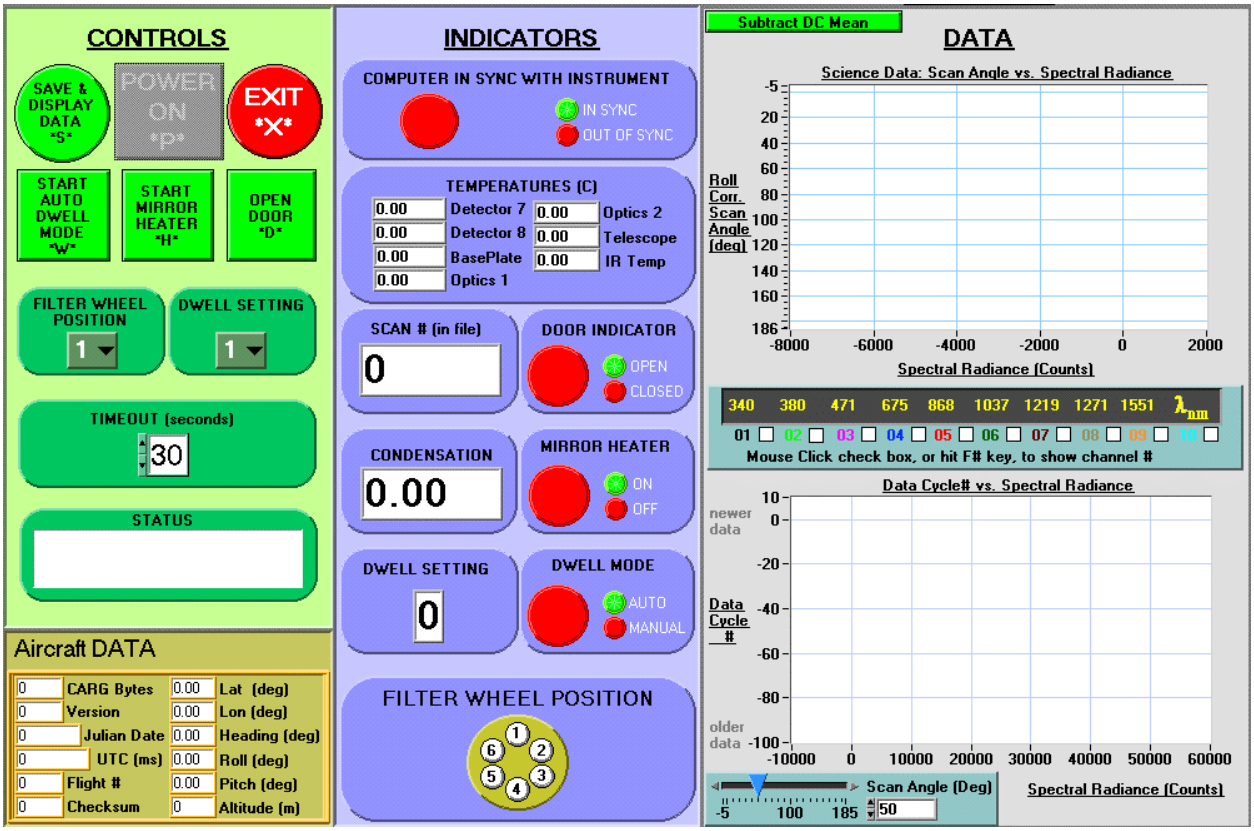

Fig. 1.—CAR 'virtual' Instrument Software Panel.

The CAR software panel is divided into three main sections as shown in fig. 1: The **Controls, Indicators, and Data sections**. The **Controls section** is at the left-hand side of the panel and has switch buttons which allow the user to control the operation of CAR either via keyboard or mouse click control. These include:

- 'POWER ON' control which effectively turns on the CAR instrument
- 'EXIT' control which performs an orderly shutdown of the software and turns off some of the instrument functions
- 'SAVE & DISPLAY DATA' control allowing toggling on and off of this option
- 'DWELL MODE' control allowing auto or manual dwell mode
- 'MIRROR HEATER' control
- 'DOOR' control allowing door opening and closing
- 'FILTER WHEEL' and 'DWELL SETTING' controls
- 'TIMEOUT' control allowing the user to set a time limit alerting that no data has arrived for that period of time. **Note: This version of CAR only attached a timeout condition to the data stream coming from the controller. It did not attach a timeout condition to data coming from University of Washington Navigation/GPS/Aircraft Header data stream.**

Note that the buttons can be clicked on with the mouse or controlled via the keyboard by pressing the key name shown on the lower portion of the button (e.g. 'P' for 'POWER ON'). Also note that all buttons in the control panel except for the 'POWER ON' button have a 'greyed out' appearance in fig. 1. This corresponds to a disabled (nonoperational) initial state for these controls until the 'POWER ON' function is executed after which the 'greyed out' appearance will disappear and the buttons will be operational. Following the 'POWER ON' procedure, the 'POWER ON' button will be disabled (greyed-out appearance).

The **Indicators section** is mostly in the middle of the CAR software panel; however, there are some indicators placed just underneath the Controls Section due to space considerations. A large STATUS indicator is included below the **Controls section** which conveys requests and information pertinent to the instrument state. It also conveys error conditions that may occur. Examples of messages include 'Please Power On', 'Running', 'Waiting', and 'Timeout'. At the bottom of the **Controls section**, the AirCraft Data is displayed on a subpanel. This indicator subpanel shows pertinent aircraft information that will be provided by the University of Washington every $1/10^{th}$ of a second (10 Hz) during flight to allow correlation with the science data. (NOTE: In July of 2000 during preliminary testing on the aircraft in Seattle, it was required to **initially** have the University of Washington send header data at a slower rate such as 2 Hz to not cause an out-of-synch condition at experiment start. Once the instrument and computer was synched, the header sending rate was increased to 10 Hz. However, during testing and flight in the Safari 2000 experiments in S. Africa in August of 2000 for the first time this software was used in the actual mission, it was not necessary to start at the slower rate. Everything appeared to work fine at the normal 10 Hz sending rate from start to finish for the latter. The anomaly seen during Seattle pre-testing is at this time unexplained.)

(Additionally, the instrument is now useable for taking data in an off-aircraft mode by allowing the user to control the information in this section. The Off-Aircraft mode choice results in the File Header information becoming user-controllable as shown in fig. 2. The green and gray controls allow user entry while the white and yellow indicators show unchangeable information. Within the latter unchangeable information is actual dynamic Julian Date and UTC time garnered from the PC clock. The user can see the UTC indicator changing in real-time. So for Off-Aircraft testing, the user has control of flight#, latitude, longitude, heading, roll, pitch, and altitude.) This information will be stored along with the science, dark current, and housekeeping data for every cycle of data obtained. The **indicators** in the center of the panel show general instrument information such as synchronization state of computer with instrument, temperature information, scan number (written to file), and states of instrument settings. NOTE: the temperature indicators show a continuous running temperature average.

The **Data section** is located at the right side of the panel and shows displays of the science data. This section shows graphs of 1) View angle (deg) vs. Spectral Radiance (counts) as (upper graph) and 2) Spectral Radiance (counts) vs. Data Cycle Number (lower graph). In between the two graphs is control palette allowing detector channel selection. The user can mouse click on the check boxes below the graphs, or hit keyboard function keys F1 - F10, to select any combination of detector channels 1 - 10 to display. The selections are applicable for both graphs. The channels are color coded to allow differentiation with the detector channel numbers next to the check boxes acting as the color legend. NOTE: A flat monitor LCD-type screen unfortunately does not differentiate the colors as well as conventional monitors. The spectral wavelength associated with each detector channel is shown just above the check box controls. Note that the spectral wavelength of channel detector 9 will be a function of the filter wheel position chosen (i.e., will display a different value as different filter wheel positions are selected). At the bottom of the graph, the user can toggle between counts and volts on the X-axis by left-mouse clicking. At the top of the upper graph, a switch button 'SUBTRACT DC MEAN' is present. When mouse clicked on, it allows the user to subtract out the dark current mean from the science data to remove any offset present.

The lower graph utilizes a circular (first in - first out) buffer and acts like a horizontal strip chart recorder with newer data the top and older data at the bottom. For this graph, a slider control (or direct number entry control) allows the user to display data for any specific view angle (-5° - 185°) (corresponding to scan number = 1 - 380). NOTE: if the specific view angle is changed while the plot is recording data, the plot will show data from the prior view angle until the data from the prior view angle is overwritten in the buffer. The buffer length is currently set to 100 data cycles allowing the viewing of ~ 60 seconds worth of data. This number can be increased by the system integrator but note the caution regarding this indicated in Appendix A.

NOTE: For Both graphs, the user can right mouse click on both axes and choose to have autoscaling or no autoscaling. With no autoscaling, the user can adjust the beginning and end values of the graph axes by mouse-clicking on these values and typing in new ones desired. On the upper graph, with no autoscaling, the user can also zoom in on the graphs by placing the mouse cursor in the graph areas and holding down the left mouse button while

dragging the mouse over the specific region of the plot to expand. **WARNING: DO NOT HOLD DOWN THE MOUSE CURSOR FOR MORE THAN 1 SEC WHEN PERFORMING SELECTION AS THIS INTERRUPTS ALL OTHER LABVIEW EXECUTION AND CAN RESULT IN OUT-OF-SYNCH CONDITION**.

CAR SOFTWARE OPERATION

PRIOR TO OPERATION, MAKE SURE THE CALIBRATION .INI FILE THAT WAS SPECIFIED BY THE SYSTEM INTEGRATORS IS LOCATED IN THE DIRECTORY SPECIFIED BY THE SYSTEM INTEGRATORS (CURRENT DEFAULT: D:\CAR\CALIBRATION1.INI). IF DURING THE CALIBRATION PROCEDURE, THE CALIBRATION DATA WAS WRITTEN TO A DIFFERENT FILE, THE FILE SHOULD NOW BE RENAMED AND PLACED IN THE DEFAULT LOCATION.

1. From the Windows Desktop, mouse double-click on CAR shortcut icon or alternatively, open the Windows File Manager/Explorer and mouse Double-click on the CAR.EXE file to Start the software from its default file location. The software panel will appear in the monitor window with the 'STATUS' indicator requesting the user to 'Please Power On'
2. 'POWER ON' the instrument by mouse-clicking the 'POWER ON' button. A panel will pop up for several seconds informing you with a message that initialization is occurring followed by a message saying that it is OK to proceed. Please observe the messages in the 'STATUS' indicator as well during this period. During this period, all serial ports will be initialized and prepared for reading/writing. Additionally, a 'reset' command followed by a 'start' command is automatically sent to the CAR instrument control module so that the board will begin receiving and processing data. Following initialization, the 'POWER ON' button will be disabled (greyed-out appearance) and the other buttons initially disabled will be enabled and become operational.
3. A file dialog box will pop up prompting the user for the type of filename (date-time format or custom name). Please select the preferred option. A second header dialog box will pop-up and the user should create/modify the filename as desired and then mouse click OK on the dialog box or hit the RETURN keyboard key. A third dialog box will pop-up requesting the File Header type, either **Off-Aircraft** (choose if performing off-aircraft testing) or **Aircraft** (choose if performing on-aircraft testing and receiving the header aircraft data information from the University of Washington). (The Off-Aircraft mode choice results in the File Header information becoming user-controllable as shown in fig. 2. The green and gray controls allow user entry while the white and yellow indicators show unchangeable information. Within the latter unchangeable information is actual dynamic Julian Date and UTC time garnered from the PC clock. The user can see the UTC indicator changing in real-time. So for Off-Aircraft testing, the user has control of flight#, latitude, longitude, heading, roll, pitch, and altitude by directly inputting numbers into the controls or mouse-clicking on the up and down arrows attached to the control.)

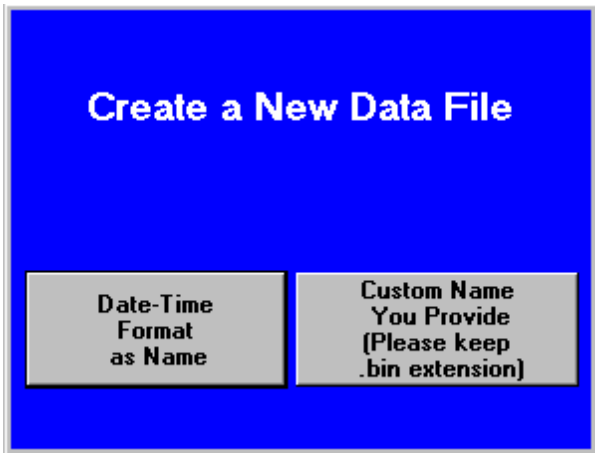

Fig. 2.—File Dialog

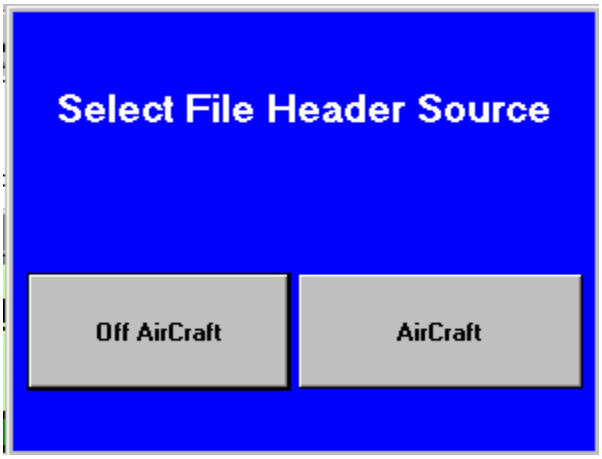

Fig. 3.—Header Dialog

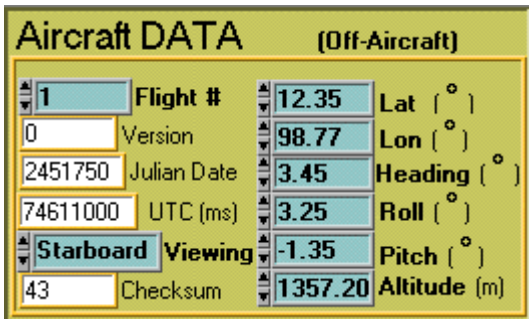

Fig. 4.—Off-Aircraft Header Control/Indicator Box.

4. Following step 3), select Control operations as desired using mouse-clicking or keyboard equivalents as described in the section entitled 'CAR SOFTWARE PANEL DESCRIPTION.' 'FILTER WHEEL' and 'DWELL SETTING' functions are settable via provided menu ring controls. **WARNING: DO NOT HOLD DOWN THE RING CONTROLS DOWN FOR MORE THAN 1 SEC WHEN PERFORMING SELECTION AS THIS INTERRUPTS ALL OTHER LABVIEW EXECUTION AND CAN RESULT IN OUT-OF-SYNCH CONDITION**. Most likely, after certain control operations are executed (e.g. 'DOOR OPEN'), **the user will want to begin to 'SAVE & DISPLAY DATA'**. Use the function keys F1 - F10, or mouse click on the equivalent check boxes, to display the data of the detector channels 1 - 10 desired.
5. If a timeout condition occurs, it indicates that the instrument has not received data for the time period specified in the 'TIMEOUT' control, and a dialog box will pop-up on screen allowing the user the options to continue or stop the experiment.
6. If an Out-of-Synch condition occurs, the Software must be stopped (a dialog box will pop requesting that the user stops the message), and the hardware board will be powered down automatically via the software during the shutdown procedure.
7. The Science Data Roll-Corrected Scan Angle vs. Spectral Radiance (upper) Graph has an auxiliary control 'SUBTRACT DC MEAN' that when mouse clicked on allows the user to subtract out the dark current mean from the science data to remove any offset present.
8. For the Spectral Radiance vs. Data Cycle Number (lower) graph, adjust the desired scan angle (non-roll-corrected) with the slider or numeric entry control to view data at one particular scan angle. NOTE: if the specific scan angle is changed while the plot is recording data, the plot will show data from the prior scan angle until the data from the prior scan angle is overwritten in the buffer. The buffer length is currently set to 100 data cycles allowing the viewing of ~ 60 seconds worth of data.

9. To stop the CAR software and instrument, the user only need to mouse click on the 'EXIT' button or hit keyboard key 'X'. This will cause an orderly shutdown of the instrument (no door closing at present) with all button controls returning to their default state, the board being stopped, and the instrument powered off. The Software window will close upon exiting. Please go back to step 1) to restart.

ERROR CONDITIONS

A custom error/sstatus handling solution was built for this application that displays messages in the STATUS indicator; the General Error Handler function supplied by LabVIEW could also have been employed. Possible error conditions include:

1. Computer out-of-synch with instrument is the first error condition where explicit error handling occurs; if this condition occurs, a dialog box will appear on screen prompting the user to stop the experiment. At this time, there is no recovery from this error and the experiment must be stopped, and then restarted.
2. The timeout condition is the second error condition where explicit error handling occurs; if data is not received for the time period specified in the 'TIMEOUT' control; a dialog box will appear on screen prompting the user to either restart, or stop, the experiment.
3. File (Disk) Error: Message will display in status indicator. Likely due to disk hardware problem if it occurs.
4. Header (Aircraft Data) Serial Port Read Error. Message will display in status indicator. Likely due to Serial Port or other hardware error, or wrong port specified for read.
5. Instrument Data Serial Port Read Error. Message will display in status indicator. Likely due to Serial Port or other hardware error, or wrong port specified for read.
6. Instrument Command Serial Port Write Error. Message will display in status indicator. Likely due to Serial Port, instrument, or other hardware error, or wrong port specified for write.
7. Instrument Command Parallel Port Write Error. Message will display in status indicator. Likely due to Parallel Port (lpt1:) or other hardware error, or wrong port specified for write.
8. Keyboard input error. Message will display in status indicator. Likely due to keyboard or other hardware error.
9. .INI File Error: Message will display in status indicator. Likely indicates that the calibration.ini file specified by the system integrators was not found / placed in proper directory, etc.

SUMMARY

The aircraft-mounted Cloud Absorption Radiometer (CAR) instrument has been the most frequently used airborne instrument built in-house at NASA Goddard Space Flight Center. Since 1983, it has been used to gather data for atmospheric studies over many sites in the United States, Azores, Brazil, and Kuwait (King, et al., 1986 and King, 1992). The CAR instrument is capable of measuring light scattered by clouds in fourteen spectral bands in ultraviolet, visible and near-infrared regions (total wavelength range of 0.340 to 2.3 microns). CAR data has been the basis for climate studies, remote sensing application development, and atmospheric condition assessment (e.g. after disasters such as the Kuwaiti oil fires). The LabVIEW (v5.1.1) software interface for CAR (fig. 10) completely replaces the prior data system and control panel with a compact and robust virtual instrument that performs control, data acquisition, display, and data storage functions.

Some of the software features and operation details include:

- The CAR interface is logically divided into control buttons, status indicators, and data display functions.
- A full data cycle consisting of 10308 character bytes of data from two RS-422 serial ports is acquired, decoded, analyzed, displayed, and stored every 600 msec. Typical mission experiments run for 2 - 4 hours resulting in 100 - 200 Mb data sets. One serial port reads 10264 character bytes obtained from the instrument controller. This is the instrument data. A second serial port obtains aircraft information such as latitude, longitude, altitude, pitch and roll angles from a transmission every 100 msec by the University of Washington. The aircraft data is needed to understand the state of the aircraft while the instrument obtains

its radiometric data. The two data streams are concatenated at the end of each data cycle, and correlated with each other during post-flight analysis. Data is written to file on hard disk for each data cycle for post-processing.

- Serial port writes are used to send commands to the controller module of the instrument. The commands written (when the user interacts with one of the control buttons on the CAR software interface) are converted to analog voltages to control the various hardware functions such as mirror heating.
- Two main while loops controlling the serial communication are employed in the source code: one controlling serial command writes and one controlling serial data reads. The while loops operate at different speeds (delays).
  Communication between the two while loops is accomplished via local variables.

    - The loop controlling serial command writes is in a wait state (polling occurs every 100 msec) until triggered by one of the commands (e.g. change of Dwell Setting).
    - The loop controlling serial data reads checks for the predefined number of character bytes (representing a whole data cycle's worth of information) to have arrived at the serial port before executing the remaining decoding and display functions. If the predefined number of bytes has not arrived at the read serial port, the loop waits until the next 5 msec multiple (plus 1 extra msec) before checking again. This architecture is based on that shown for conventional serial communication function presented in Johnson, 1999.

- LabVIEW v2.5 VISA serial functions are employed seamlessly for serial port communication.
- Empirical demonstrations revealed that the MS Windows NT 4.0 operating system executed the LabVIEW software significantly faster than MS Windows 98. Special LabVIEW routines are required to access the parallel port when using the Windows NT operating system.
- A command written to the computer parallel port from the software interface is used to start the instrument via an isolated switching interface device on the instrument.
- Control button and indicator colors 'red' and 'green' are utilized consistently in the interface to indicate inactive/off and active/on states. Controls are enabled and disabled based on user actions to guide the user through virtual instrument operation. Function and non-function key navigation (with special LabVIEW keyboard utility for the latter) is employed for controls.
- Real-time plotting of data from any combination of user-selectable spectral channels/bands at any user-selectable view angle (based on the tilt of the aircraft) is utilized.
- The Lower CAR Data graph utilizes circular buffer technique (Johnson, 1997 and LabVIEW Developer Zone, 2000) to manage viewing of latest 100 cycles of data.
- The instrument has been software-enabled to work in an off-aircraft mode that allows calibration, testing, and experimentation prior to the mission.
- A simulator mode is available that allows pre-testing of new features that might be added in the future. This mode also permits development at times when the instrument/hardware is off-location, and demonstrations to visitors interested in the CAR. The simulator mode uses no serial port hardware to operate; only global variables written to and read from. See Appendix D.
- A Post-test CAR data viewer is available that allows viewing data by cycling through it or selecting specific cycles, as well as detecting positions of bad 'start' and 'stop' bytes generated by the instrument controller. See Appendix E.
- Preliminary data from the August 2000 CAR mission flown over S. Africa and utilizing the new CAR version for the first time is publicly available at http://www.safari2000.org. Additional information for CAR projects are available at http://car.gsfc.nasa.gov.

REFERENCES

1. Gruggett, Lynda, "A Fast Way to Add and Remove Plots from a Multiplot," LabVIEW Technical Resource, Vol. 3, No. 4, 1995a, p.13.
2. Johnson, Gary W., LabVIEW Graphical Programming, 2nd Edition, McGraw-Hill, 1997. pp. 192–196, 201–205, 482–483, 493–496.

3. King, Michael D., Strange, Maxwell G., Leone, P., and Blaine, Lambdin, R., Multiwavelength Scanning Radiometer for Airborne Measurements of Scattered Radiation within Clouds, Journal of Atmospheric and Oceanic Technology, Vol. 3, No. 3, September 1986, pp. 513–522.
4. King, Michael D., Directional and Spectral Reflectance of the Kuwait Oil-Fire Smoke, Journal of Geophysical Research, vol. 97, no. D13, Sept. 20, 1992, pp. 14,545–14,549.
5. National Instruments Developer Zone, "Retaining the 150 Most Recent Values in an Array," 2000. www.ni.com
6. http://www.safari2000.org
7. http://car.gsfc.nasa.gov
8. KnowledgeBase Document ID: 18QGBH0O entitled "How Do I set Individual Bits for the Parallel Data Port Using LabVIEW?" Any computer that runs the CAR software with Windows NT4.0 must also have the 'AccessHW.zip' installed to make direct access to memory available on NT. After downloading 'AccessHW.zip' and unzipping, run setup.exe and the installation wizard will guide the system integrator through.
9. Johnson, Rande, “Rules to Wire By (VI Development Techniques),” LabVIEW Technical Resource, Vol. 7, No. 2, 1999, p. 4.

APPENDIX A.—ADDITIONAL INFORMATION FOR CODE MAINTENANCE

In the static (non-running) VI (but not the .exe executable) version of the code, the front panel extends further down and to the left and right than that shown in fig. 1. These off-the-main-screen areas can be accessed in the static VI. The display panels are provided in these areas that can be used for debugging errors and for further control (e.g. enable the door to be closed automatically during shutdown, calibration procedures, etc.). However, the developers intentionally removed scrolling capability from the .exe executable file because normally the end user would have no need for accessing items off of the main panel. To create a .exe executable version of the CAR software that has scrollbar capability, the system integrator needs to mouse right-click on the CAR icon box at the top left of the CAR MAIN VI window, choose 'VI Setup', choose 'Window Options,' and select 'Show Scroll Bars'. Then the .exe file will have scrolling capability to see the display panels shown below.

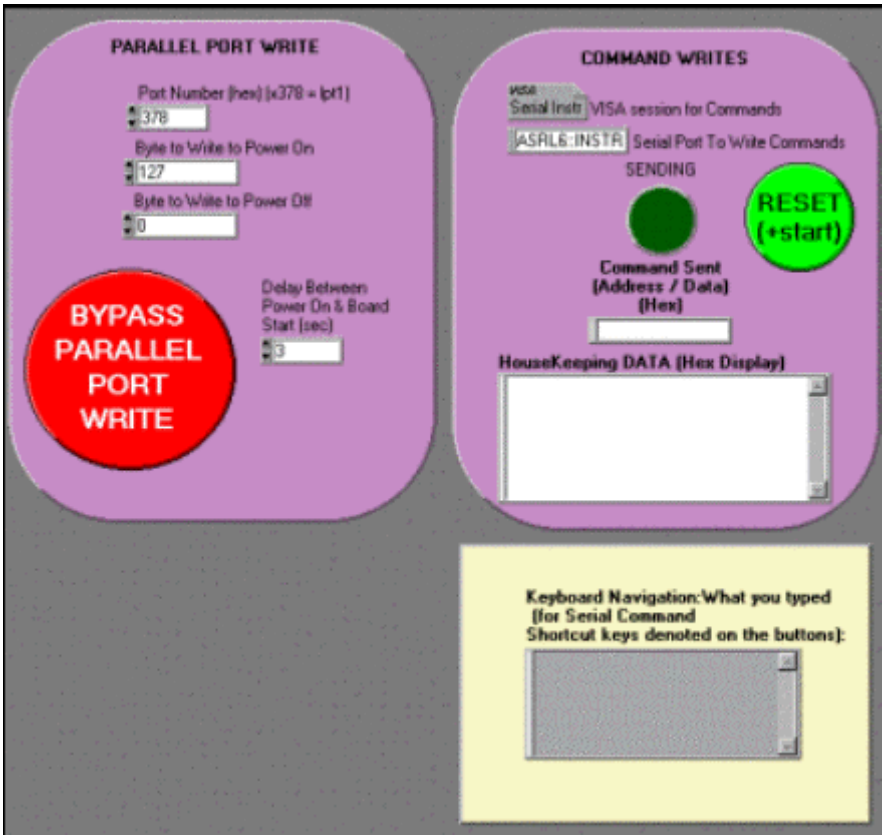

Fig. A1.—Control Information for Parallel and Serial Command Writes, and Keyboard Control Input. These panels show the port addressing, commands sent, and important controls and indicators related to the Parallel Port Write, Serial Command Writes (Housekeeping Data has information on the status of controls controlled by the Serial Command Writes), and Keyboard Control Input. The 'BYPASS PARALLEL PORT WRITE' switch button if depressed allows system integrators to manually power operate the CAR instrument (if so configured). The 'RESET (+START)' switch button if depressed sends a 'reset + start' command to the serial port specified for the write commands.

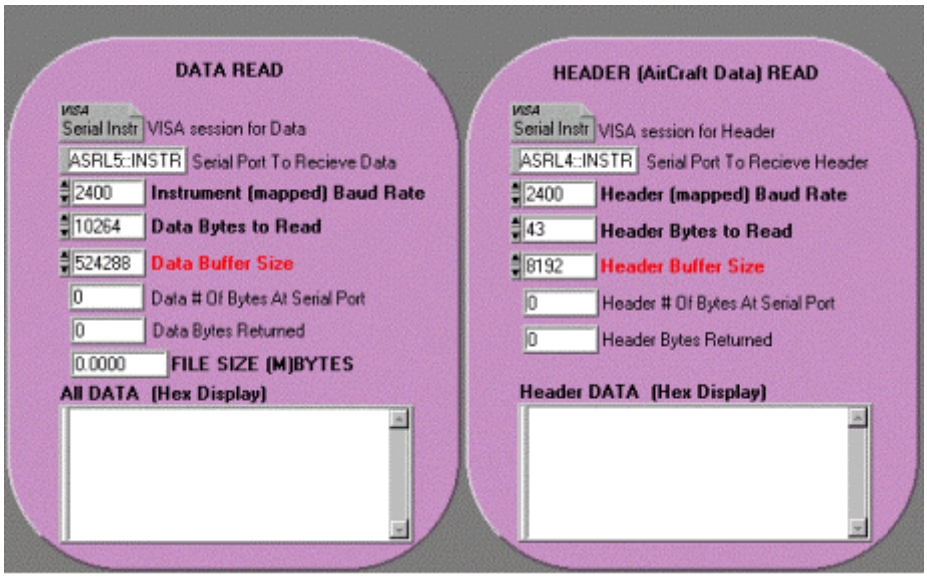

Fig. A2.—Data and Header (Aircraft Data) Information from Serial Port Reads. These panels show port addressing, mapped baud rates, buffer size and data and header bytes to read controls (with default values shown). Also shown are indicators that display the data, the number of bytes actually at the serial port (dynamic value), and the bytes returned after the serial reads (should equal '___ Bytes to Read' for both Data and Header).

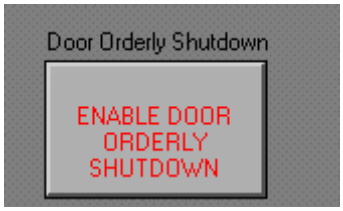

Fig. A3.—This control allows the instrument door to be shut automatically during a shutdown procedure (i.e. without having to mouse click on the DOOR control). Default position for this control is 'not enabled', i.e., the door will not shut automatically during a shutdown.)



Fig. A4.—This panel is located directly above the upper graph but still out of sight of the end user. The palettes shown are LabVIEW zoom and pan (left-most, dark background) and cursor display. For use by system integrators.

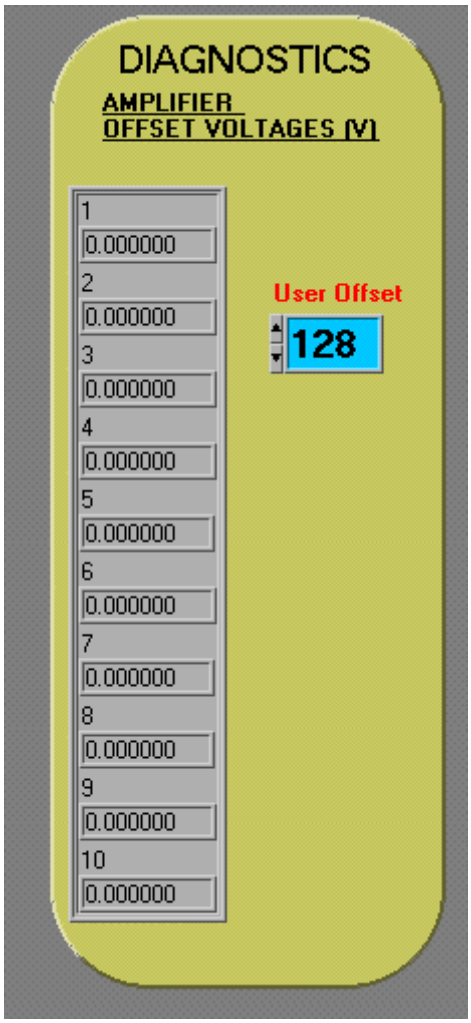

Fig. A5.—Amplifer Offset Voltages (from housekeeping data). This panel shows amplifier offset voltages present for detectors 1 - 10. A 'USER OFFSET' control is also available for system integrators to adjust the instrument.

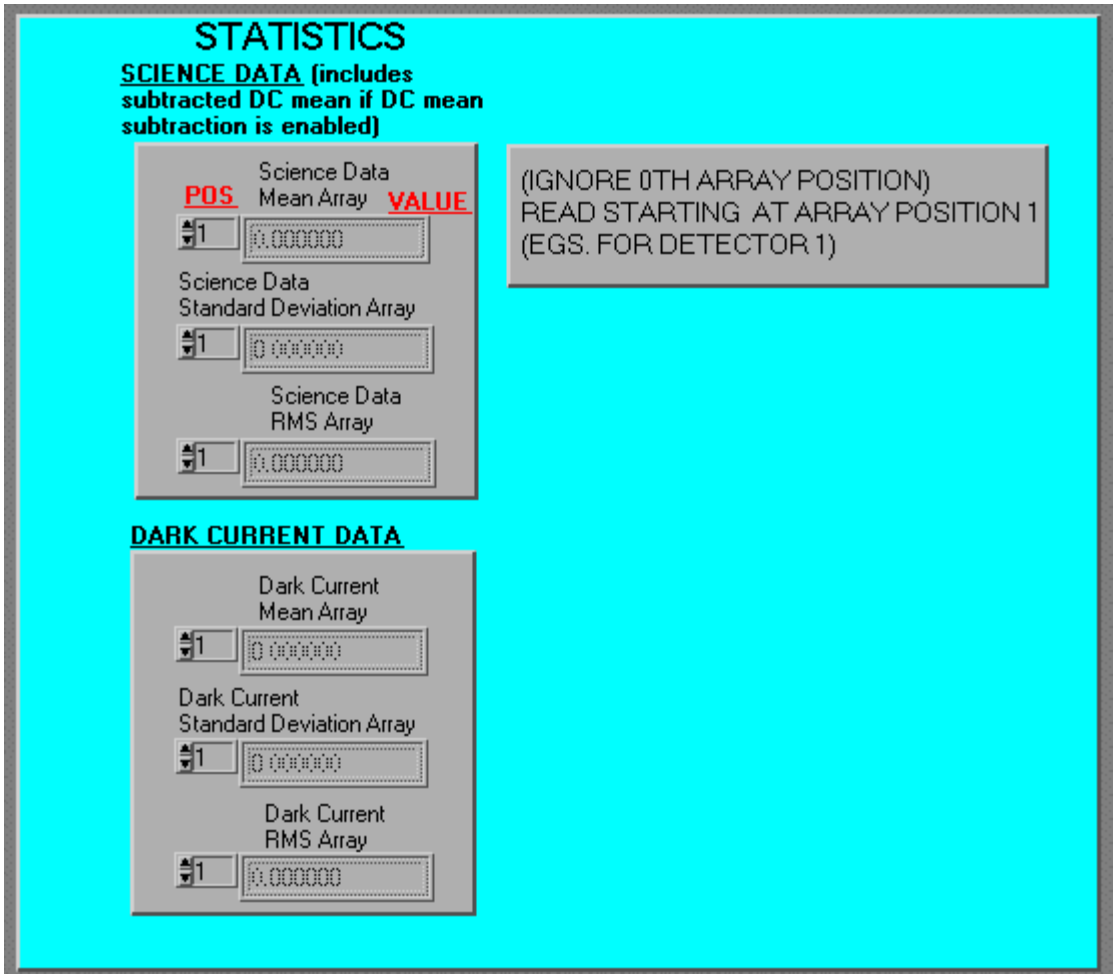

Fig. A6.—Statistics for Science Data and Dark Current. Mean, Standard Deviation, and RMS values are computed and shown for each detector channel 1 - 10. The Dark Current Mean value can be subtracted from the Science Data for the corresponding channel via a control above the upper Data Graph. Precision (number of decimal places) will change from 0 for counts to 6 for volts depending on the x-axis units selected 'X AXIS UNITS: COUNTS' switch button by system integrators.

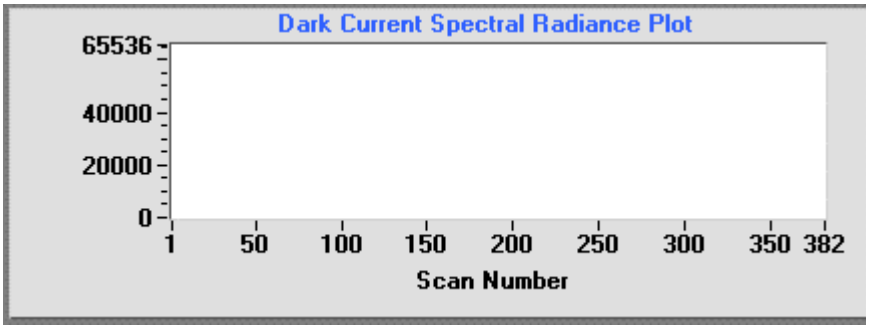

Fig. A7.—This panel shows Dark Current Spectral Radiance vs. Scan Number. The units on the Y-axis will change based on the what is selected for the 'X (yes X)AXIS UNITS: COUNTS' switch button. For use by system integrators.



Fig. A8.—Error Reporting Panel. Status (green check = no error/red X = error), Code, and Text make up an error cluster box. Separate error boxes are shown for File (disk) I/O, Header (Aircraft Data) Serial Reads, Instrument Data Serial Reads, Command Serial Writes, Command Parallel Writes, Keyboard Input, and .INI file (containing calibration values). A more detailed description of errors, if they occur, is available by right mouse-clicking on the code (middle) indicator of each error box and selecting 'Explain Error'. Note: the General Error Handler function supplied by LabVIEW could also have been employed to consolidate all of the potential errors into a queue-type system.

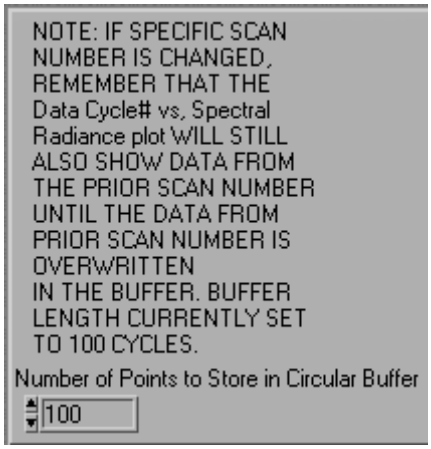

Fig. A9.—This panel allows one to change the number of points to store in the circular buffer for the lower graph. Default setting is 100. Although any number of points can be stored in the buffer, over 100 points has not been tested in CAR. Larger amounts to store may slow down operation of the CAR software.

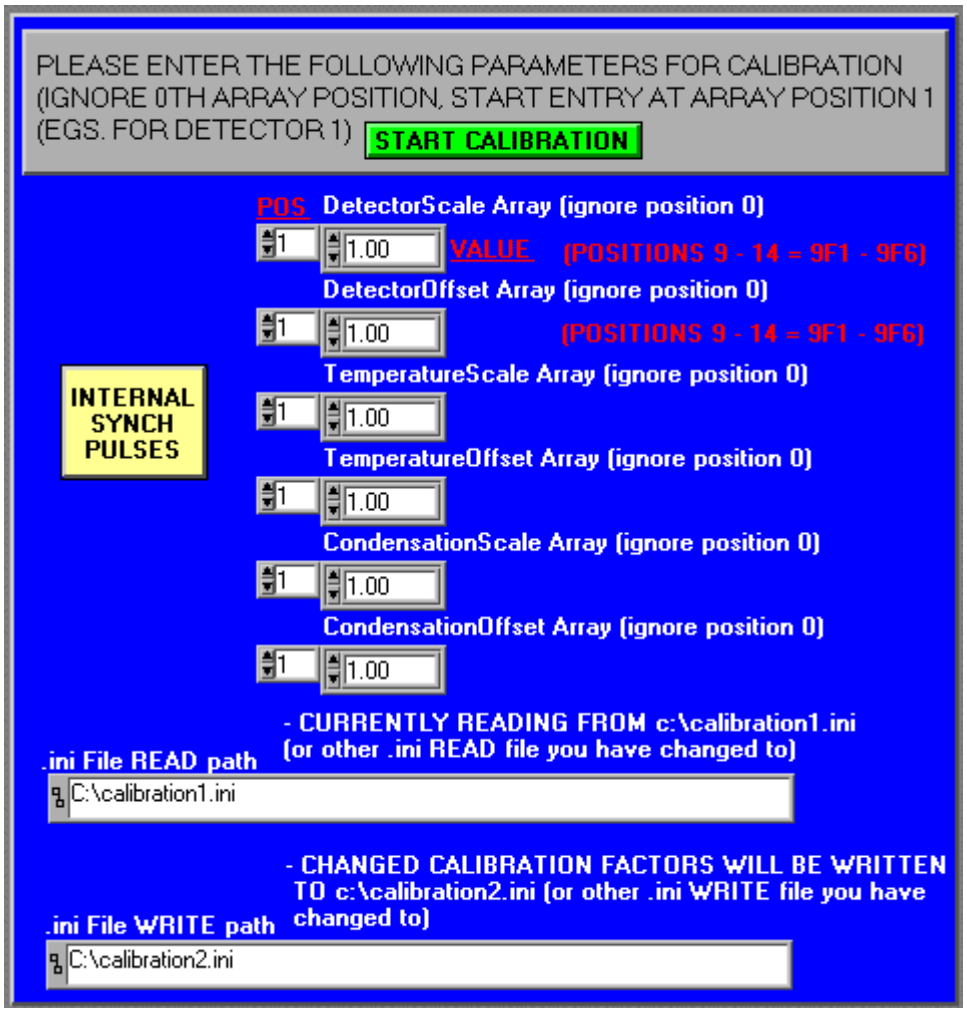

Fig. A10.—Calibration Panel. To be used during the calibration procedure, this panel provides controls to adjust scale factors (m) and offsets (b) (Y=mX+b where Y is the calibrated data value and X is the uncalibrated data value). The control at the top is used by system integrators for commanding the instrument board for synchronization off of INTERNAL or MIRROR pulses. The 'START CALIBRATION' switch button when depressed allows the user to begin the calibration procedure. Note: A separate calibration interface window running as a totally separate VI in parallel to the CAR main interface could have been employed. This VI would have its front panel appear when called (as triggered by mouse-clicking on control). This approach was not taken because it would have required global variables or queues to communicate between the CAR main interface loop and the Calibration VI. Global variables have a reputation as being slow.

APPENDIX B.—CAR DATA FORMAT

Table B1.—CAR Data Format[1]

Data	Start Byte#	Stop Byte#	Description
Navigation/GPS/Aircraft (Header) Data (44 Bytes, Hex Positions: 0000 - 002B, Decimal Positions: 0 - 43)[2]:	0	3	"CARG" sync bytes - 4 byte long int (I32) (Hex Value = 0x43415247)
	4	4	Version - 1 byte int (I8) (Hex Value = 0x00)
	5	8	Date - 4 byte long int (I8)
	9	12	Time - 4 byte long int (I32)
	13	16	Flight number - 4 byte long int (I32)
	17	20	Latitude - 4 byte float (SGL)
	21	24	Longitude - 4 byte float (SGL)
	25	28	Heading - 4 byte float (SGL)
	29	32	Roll - 4 byte float (SGL)
	33	36	Pitch - 4 byte float (SGL)
	37	40	Altitude - 4 byte float (SGL)
	41	41	Viewing - 1 byte (U8)
	42	43	Checksum - 2 byte short int (I16)
Science DATA Start Code (4 Bytes, Hex Positions: 002C - 002F, Decimal Positions: 44 - 47):	44	47	Hex Value = 0xFF FF FF FF
Science DATA (7640 Bytes, Hex Positions: 30 - 1E07, Decimal Positions: 48 - 7687): **Note: Science Data is in the unsigned Word (U16) Format and thus consists of two unsigned bytes (U8) ('high byte' followed by 'low byte')** **For Science Data, repeat the following for each of 382 scans to Obtain 7640 Bytes**			Word1: CH01 data (high byte followed by low byte) Word2: CH02 data Word3: CH03 data Word4: CH04 data Word5: CH05 data Word6: CH06 data Word7: CH07 data Word8: CH08 data Word9: CH09 data Word10: CH10 data
Science DATA Stop Code (4 Bytes, Hex Positions: 1E08 -1E0B, Decimal Positions: 7688 - 7691):	7688	7691	Value = 0x00 00 00 00
Housekeeping DATA Start Code (4 Bytes, Hex Positions: 1E0C - 1E0F, Decimal Positions: 7692 - 7695):	7692	7695	Value = 0xFF FF FF FF

[1]TOTAL FILE RECORD LENGTH/SCAN = 10308 BYTES (44 for Header (Aircraft Data) + 10264 for CAR Data).
[2]Many of the Header byte strings are reversed during decoding based on how the information was Transmitted out by the University of Washington.

Table B1.—Continued.

Housekeeping DATA (40 Bytes, Hex Positions: 1E10 - 1E37, Decimal Positions: 7696 - 7735): **Note: Housekeeping Data is in the unsigned Word (U16) Format and thus consists of two unsigned bytes (U8) ('high byte' followed by 'low byte')**			Word1: Temperature1 (currently labeled Detector 7) (high byte followed by low byte) Word2: Temperature2 (currently labeled Detector 8) Word3: Temperature3 (currently labeled Base Plate) Word4: Temperature4 (currently labeled Optics1) Word5: Temperature5 (currently labeled Optics2) Word6: Temperature6 (currently labeled Telescope) Word7: Temperature7 (currently labeled Spare1) Word8: Temperature8 (currently labeled Spare2; Note: Spare1 - Spare2 = IR Temp) Word9: Condensation Word10 (broken into bits consists of the following): BITS 0-6: NOT USED, BIT 7: MIRROR HEATER OFF/ON (0/1), BITS 8-10 FILTER WHEEL POSITION (1-6), BITS 11-13: DWELL SETTING (1-7), BIT 14: DWELL MANUAL/AUTO (0/1), BIT 15: DOOR CLOSED/OPEN (0/1) Word11: Amplifier Offset Voltage1 Word12: Amplifier Offset Voltage2 Word13: Amplifier Offset Voltage3 Word14: Amplifier Offset Voltage4 Word15: Amplifier Offset Voltage5 Word16: Amplifier Offset Voltage6 Word17: Amplifier Offset Voltage7 Word18: Amplifier Offset Voltage8 Word19: Amplifier Offset Voltage9 Word20: Amplifier Offset Voltage10
Housekeeping DATA Stop Code (4 Bytes, Hex Positions: 1E38 - 1E3B, Decimal Positions: 7736 - 7739):	7736	7739	Value = 0x00 00 00 00
Dark Current DATA Start Code (4 Bytes, Hex Positions: 1E3C - 1E3F, Decimal Positions: 7740 - 7743):	7740	7743	Value = 0xFF FF FF FF

Table B1.—Concluded.

Dark Current DATA (2560 Bytes, Hex Positions: 1E40 - 283F, Decimal Positions: 7744 - 10303): **Note: Dark Current Data is in the unsigned Word (U16) Format and thus consists of two unsigned bytes (U8) ('high byte' followed by 'low byte')** **For Dark Current Data, repeat the following for each of 128 scans to Obtain 2560 Bytes**			Word1: CH01 data (high byte followed by low byte) Word2: CH02 data Word3: CH03 data Word4: CH04 data Word5: CH05 data Word6: CH06 data Word7: CH07 data Word8: CH08 data Word9: CH09 data Word10: CH10 data
Dark Current DATA Stop Code (4 Bytes, Hex Positions: 2840- 2843, Decimal Positions: 10304 - 10307):	10304	10307	Value = 0x00 00 00 00

The data stored is currently in 'as-is' uncalibrated format. It should be noted that the authors attempted a 'calibrated data file write' in the software but the disassembly, massive conversion of SGL (4-byte float) to character bytes, and subsequent string reassembly proved to be too much of a load to be able to accomplish in the only several hundred msecs allowed to accomplish this task concurrently with data decode and display.

APPENDIX C.—THE SOURCE CODE OF THE CAR SOFTWARE

Figure C1 shows a high-level skeleton of the subVIs used in the new CAR software. In actuality, there are many more subVIs and functions buried within the subVIs shown. The diagram indicates the relationship of the subVIs in terms of calling heirarchy. A list of subVIS and the block diagrams for the top-level CAR MAIN VI are included in this section below.

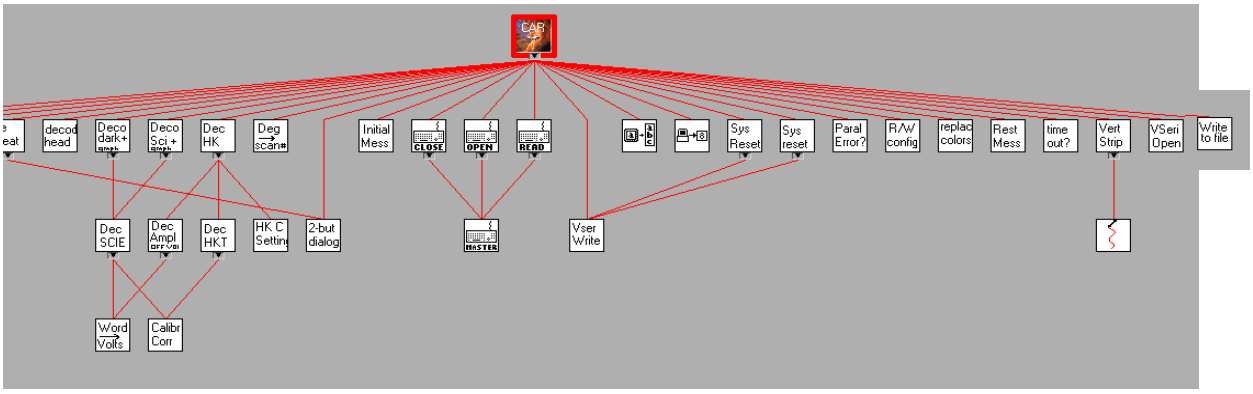

Fig. C1.—Structural Heirarchy Diagram for CAR Software

List of SubVIs

- Car MAIN20.vi (or CAR MAIN21 within Car Main21 - separate header read loop.llb)
- Open/Create/Replace File.vi
- Visa Serial Open Custom for Car.vi
- Visa Serial Write Custom For Car Commands.vi
- replace plot colors.vi
- timeout test.vi
- System Reset.vi
- decode header.vi
- Open Keyboard.vi
- Keyboard to String.vi
- Read Keyboard.vi
- Close Keyboard.vi
- System Reset for timeout and non-synch conditions.vi
- Restarting Message.vi
- 2-button dialog vi.vi
- Decode HK Data2.vi
- 1-button dialog vi.vi
- Initializing Message.vi
- Read-Write Configuration file.vi
- Filecreation2.vi
- Write File Using Single Byte Stream.vi
- Decode DARK CURRENT Data3B.vi
- Decode SCIENCE Data3B.vi
- Output Byte To Port.vi
- parallel port write error test.vi
- channel nine wavelengths.vi
- degrees to scan number.vi
- horizontal strip chart - no pens.vi
- Car Header Simulator1.vi

- key master.vi
- virtual key.ctl
- key data.ctl
- HK Control Settings.vi
- Decode HK Amplifier Offset Voltage.vi
- Decode HK Temp Value - No 2s Complement.vi
- Open Config Data.vi
- Close Config Data.vi
- Simple Error Handler.vi
- Write Key (Double).vi
- Read Key (Double).vi
- Decode HK Science Words2A.vi
- Standard Deviation.vi
- RMS.vi
- horizontal Chart Buffer CAR.vi
- Current Julian Date.vi
- Current UTC time in msec.vi
- Convert Word to Volts for Science Data.vi
- calibration correction.vi
- Config Data RefNum
- Config Data Open Reference.vi
- Config Data Set File Path.vi>
- Config Data Read From File.vi
- Invalid Config Data Reference.vi
- Config Data Close Reference.vi
- Config Data Write To File.vi
- Config Data Get File Path.vi
- General Error Handler.vi
- Config Data Modify.vi
- Config Data Modify Functions.ctl
- Config Data Get Key Value.vi
- Process UTC 1.vi
- Config Data Registry.vi
- Config Data Registry Functions.ctl
- String to Config Data.vi
- Config Data to String.vi
- Config Data Section.ctl
- Info From Config Data.vi
- Config Data.ctl

Top-Level Block Diagram

The code diagrams shown are shown in the approximate data flow ordering in which they occur. This section is intended to show the top-level code for the main functions of the software. Please note that these diagrams only represent the top-level code. Not all of the true/false cases, or frames of sequence structures, are shown. The diagrams and descriptions for the subVIs are not be shown here.

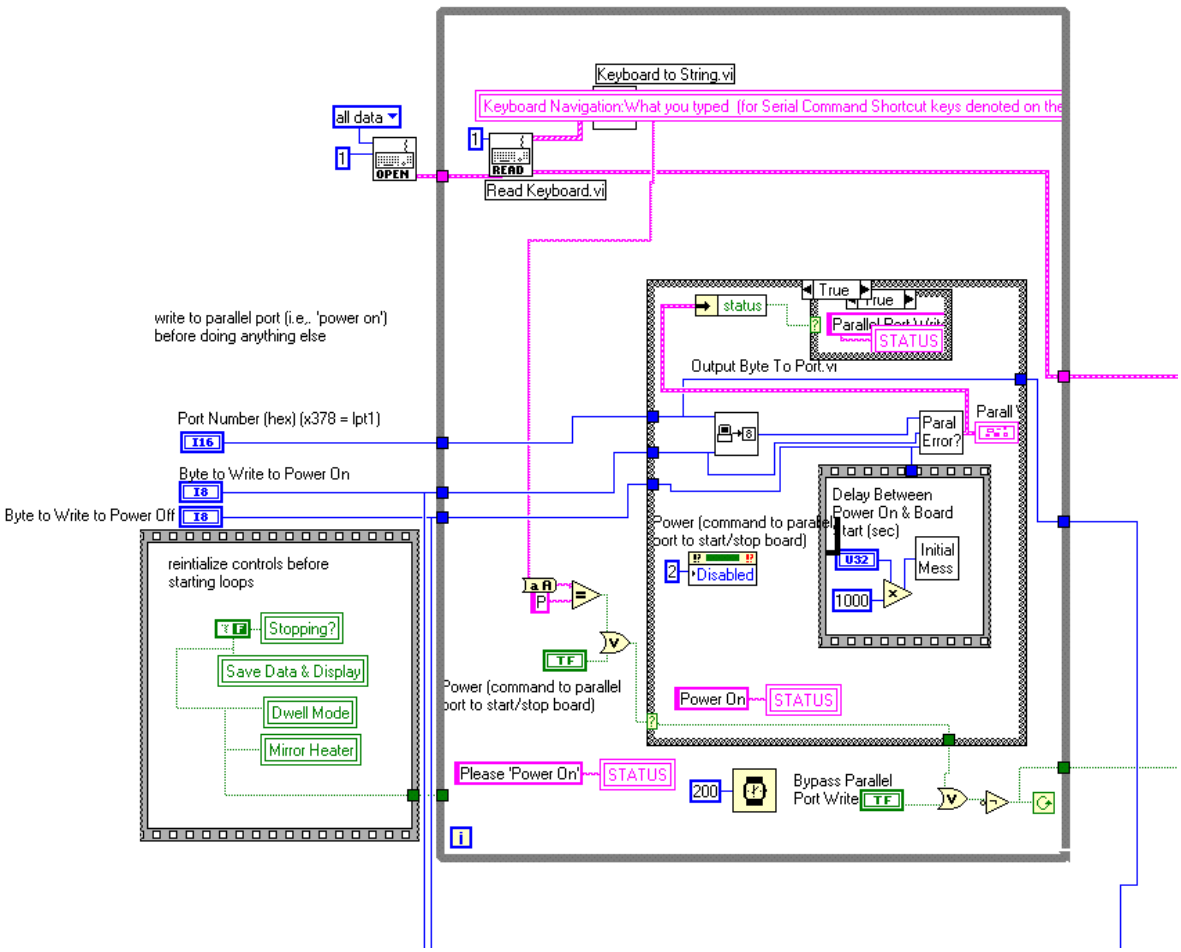

Fig. C2.—Parallel Port Write to Power On

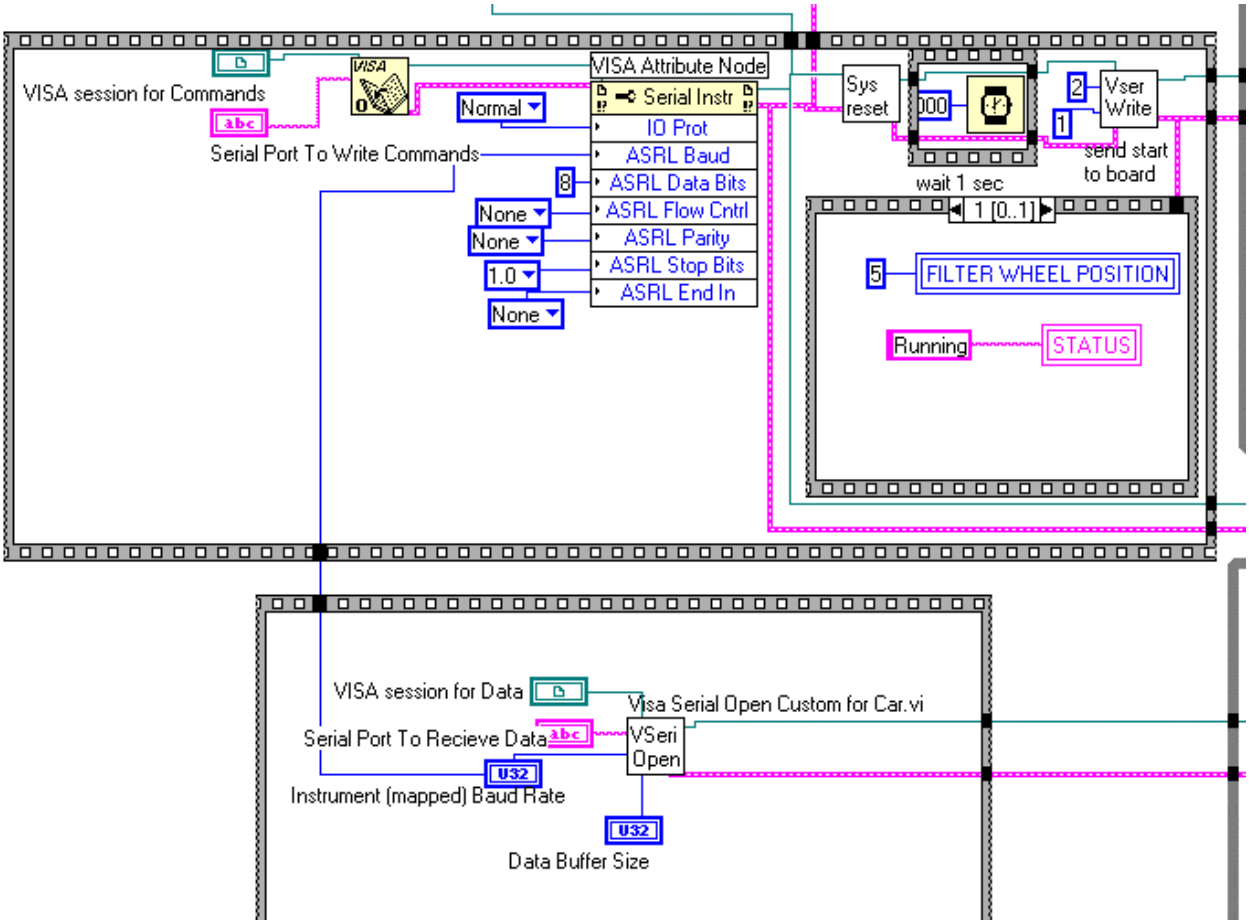

Fig. C3.—Initialization Routines for Serial Port Command Writes and Data Reads

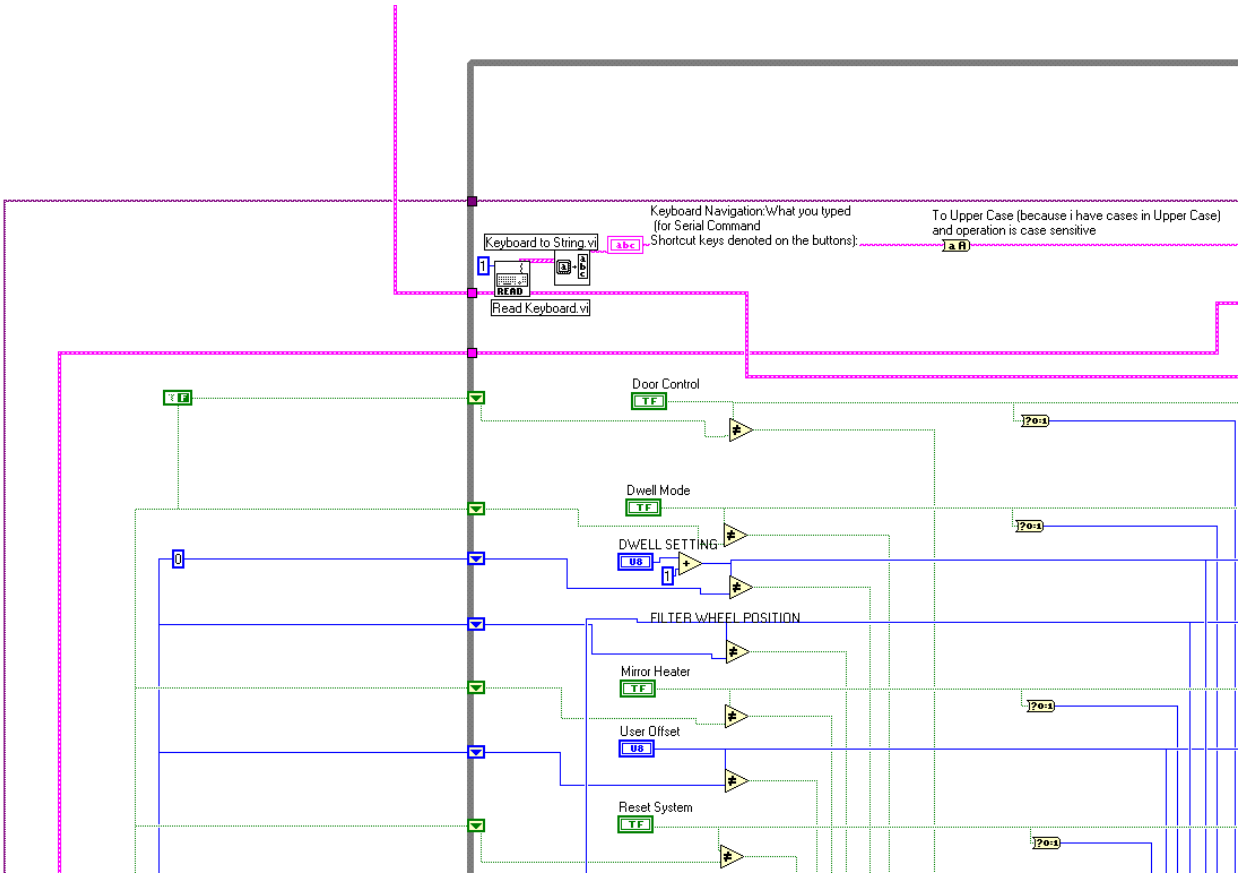

Fig. C4.—Top Front End of Command Write While Loop

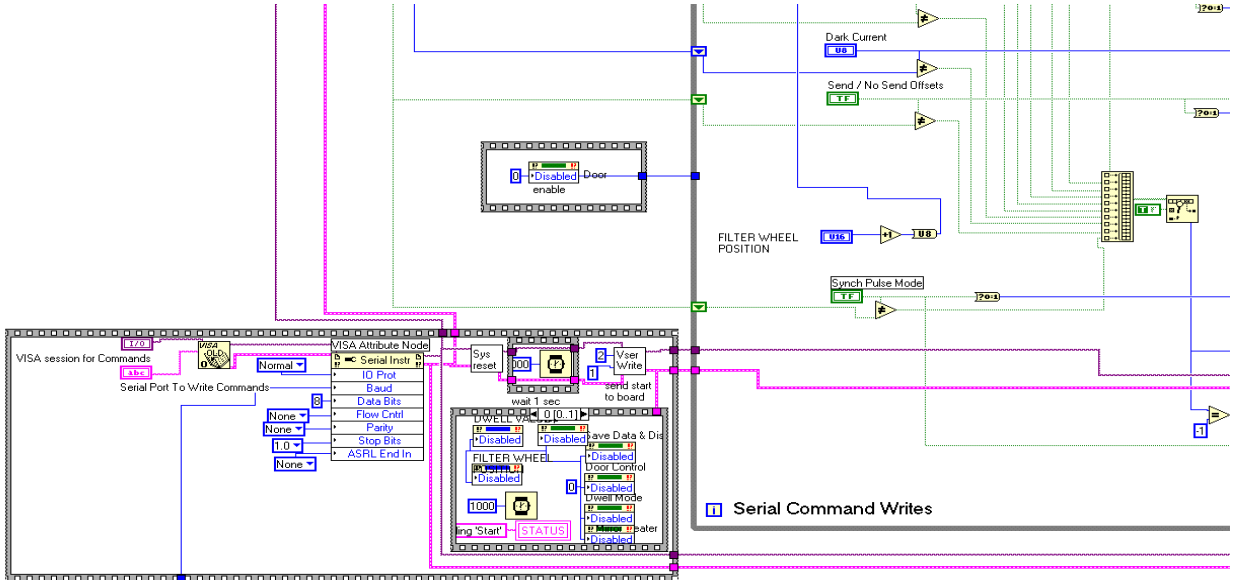

Fig. C5.—Bottom Front End of Command Write While Loop (shows initialization before entering loop)

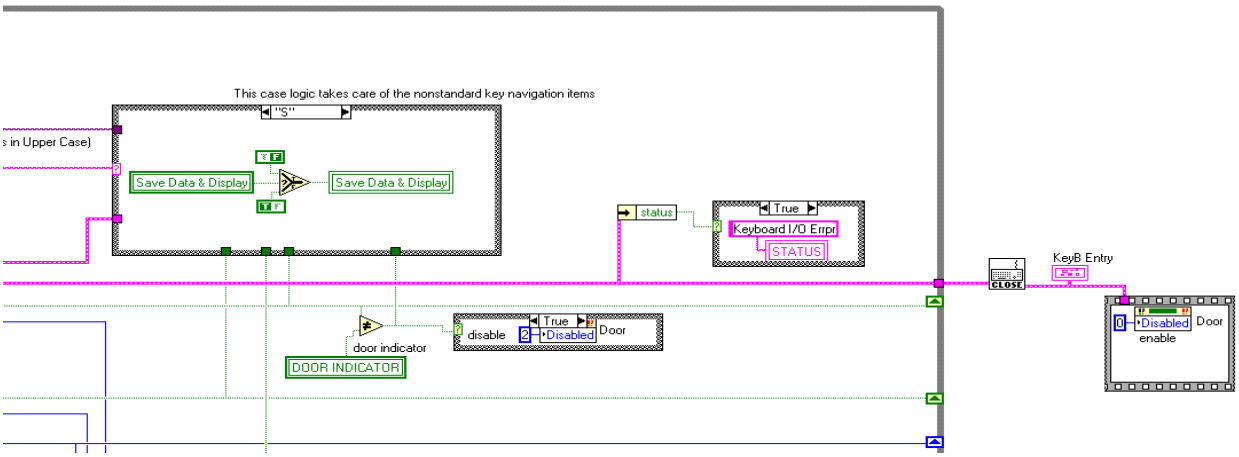

Fig. C6.—Top Back end of Command Write While Loop

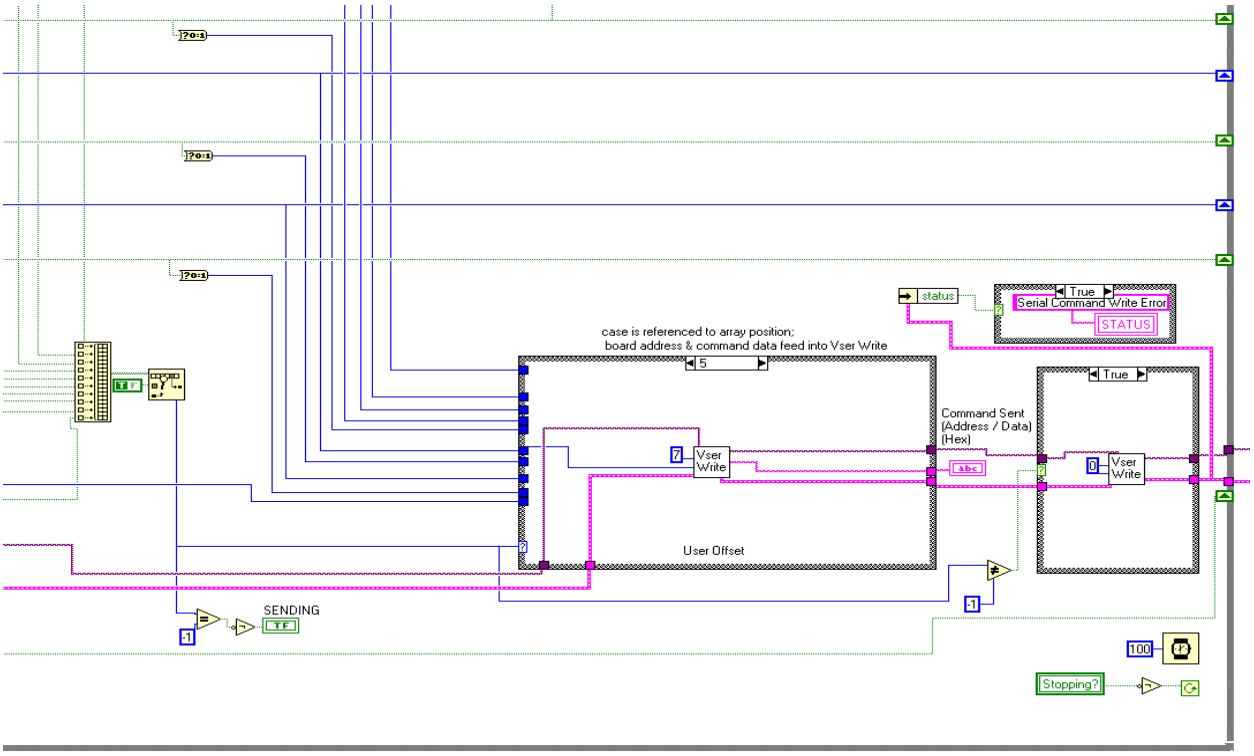

Fig. C7.—Bottom Back End of Command Write While Loop

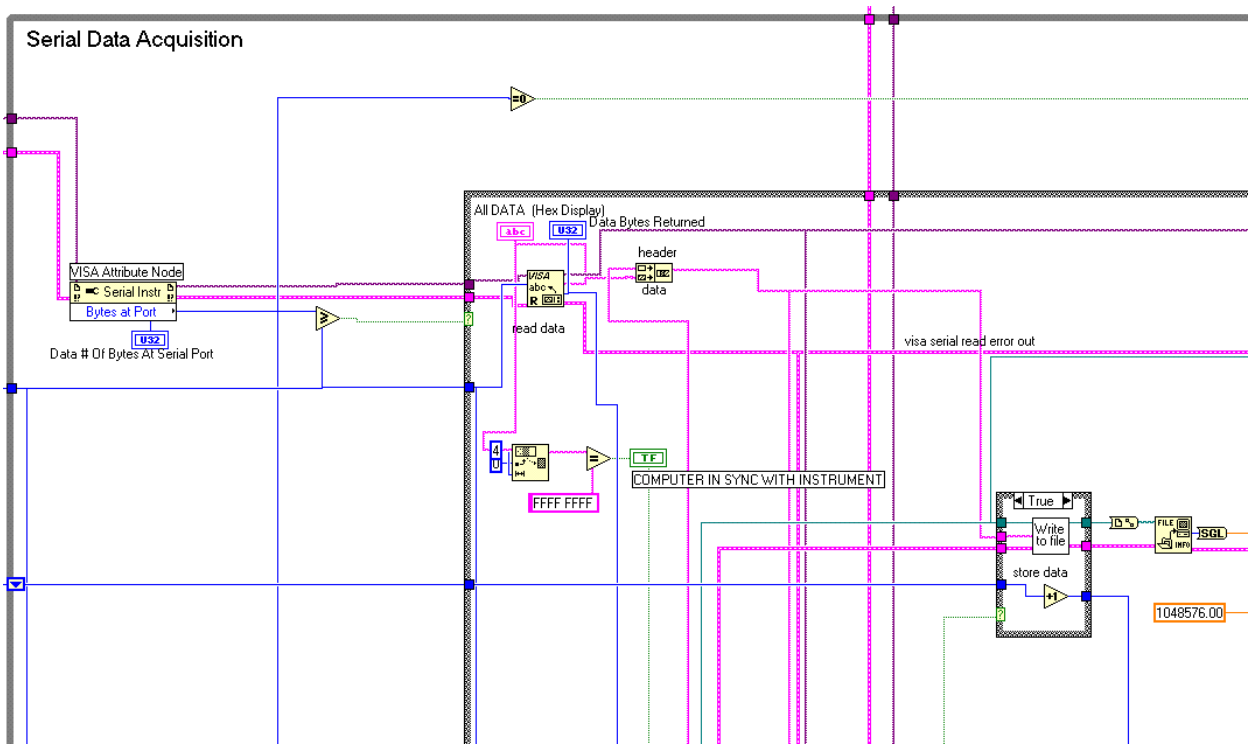

Fig. C8.—Top Front End of Data Read While Loop

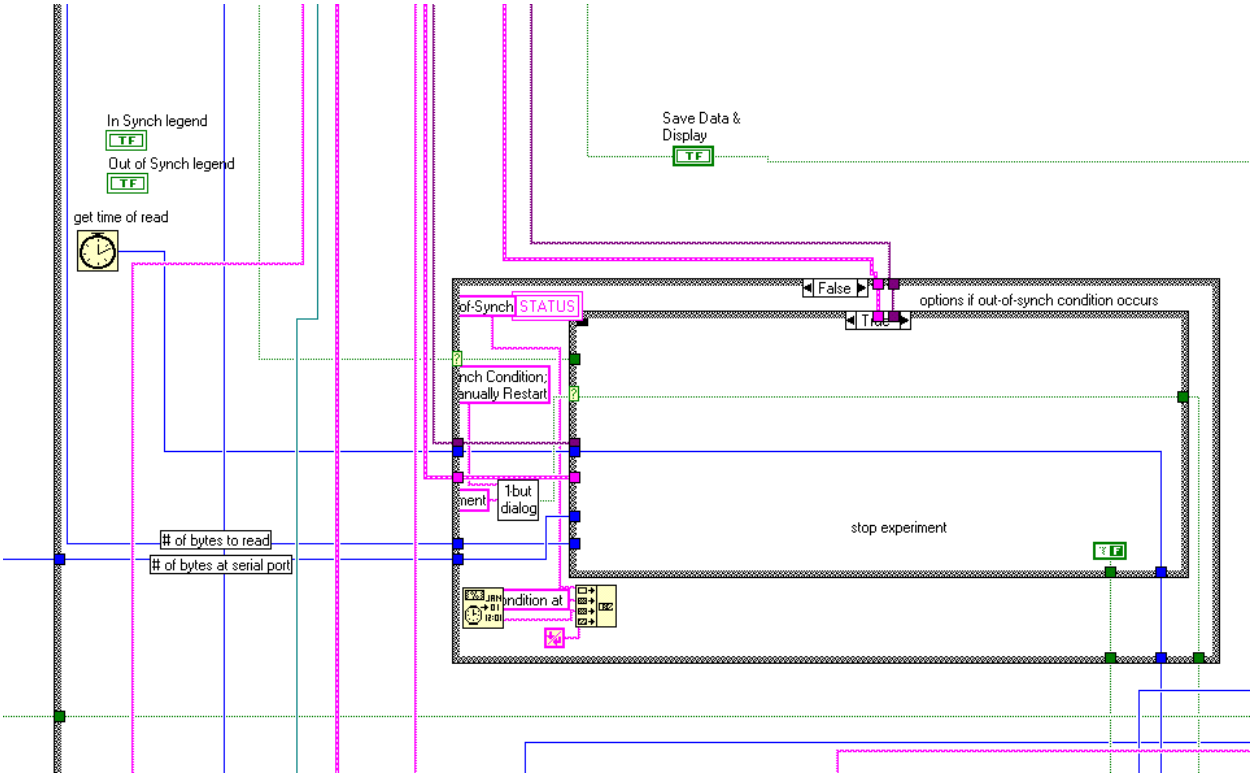

Fig. C9.—Interior Portion of Data Read While Loop For Out-of-Synch Condition Error Handling

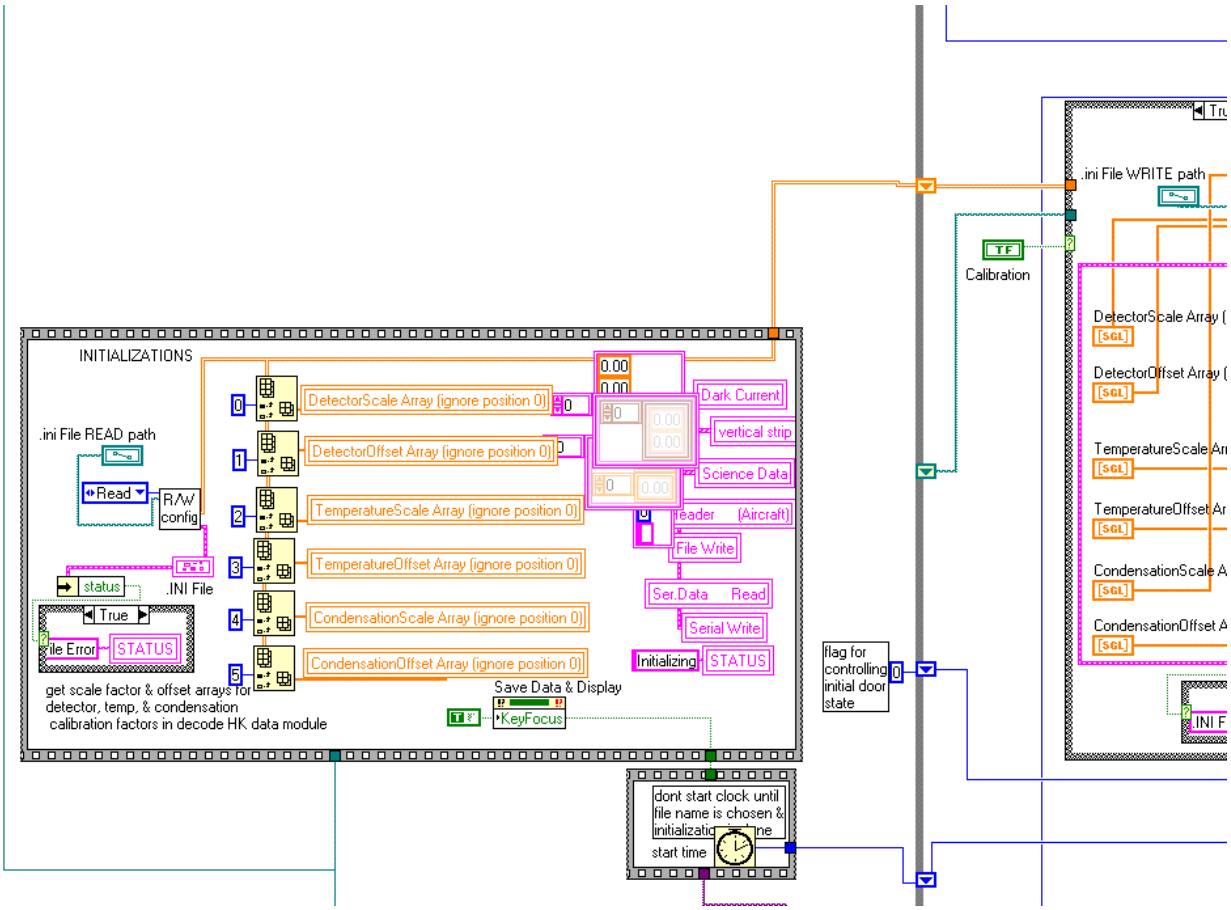

Fig. C10.—Initialization and Interior Portion of Data Read While Loop Regarding Read/Write of Calibration (.ini) files

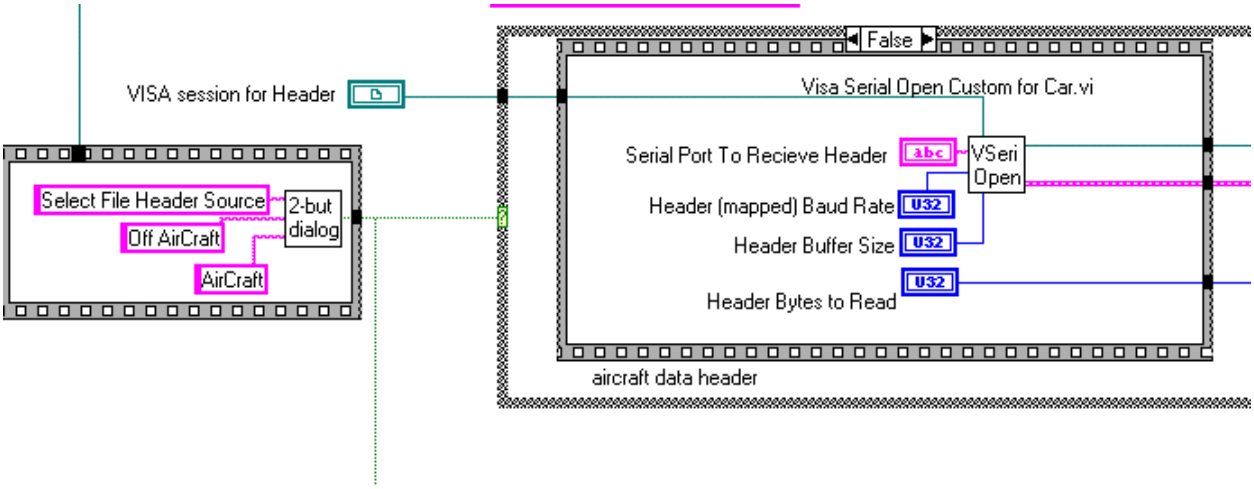

Fig. C11.—Initialization in Preparation for Serial Port Read of Aircraft (header) Information

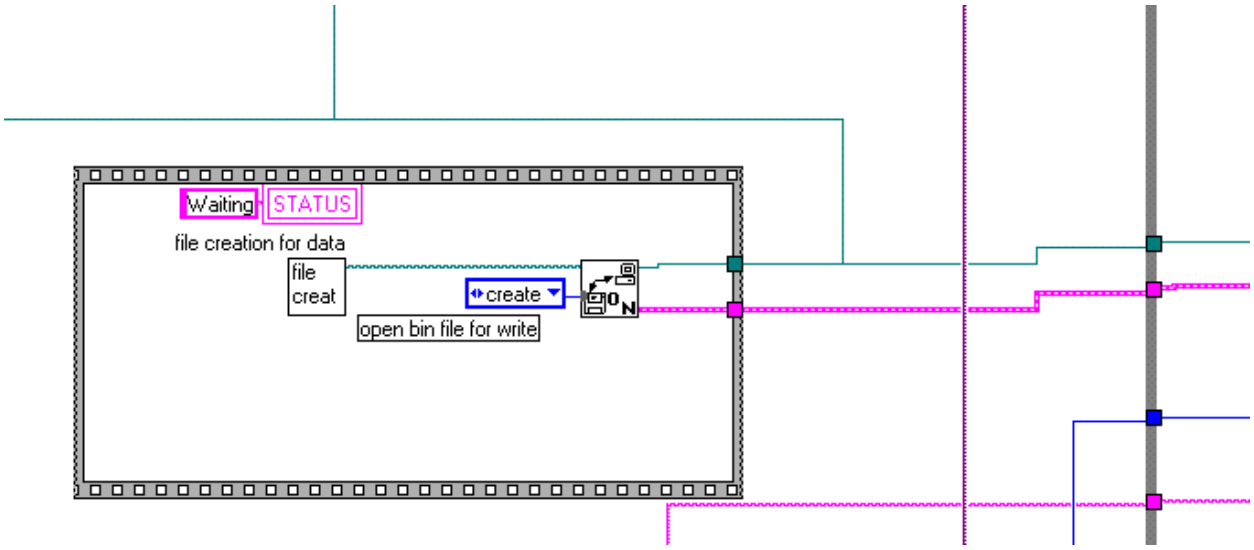

Fig. C12.—Open File For Writing Data and Aircraft Information

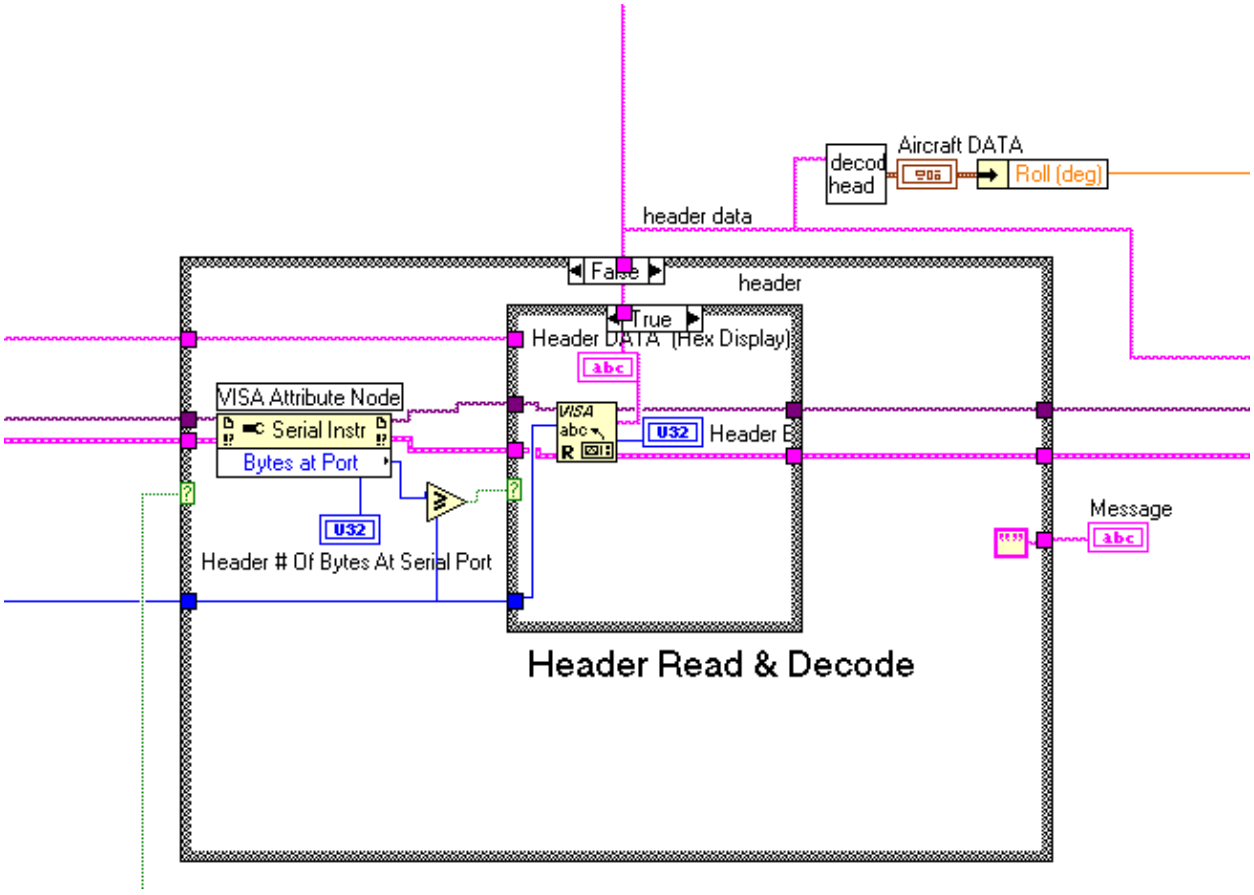

Fig. C13.—Aircraft (Header) Information Read and Decode

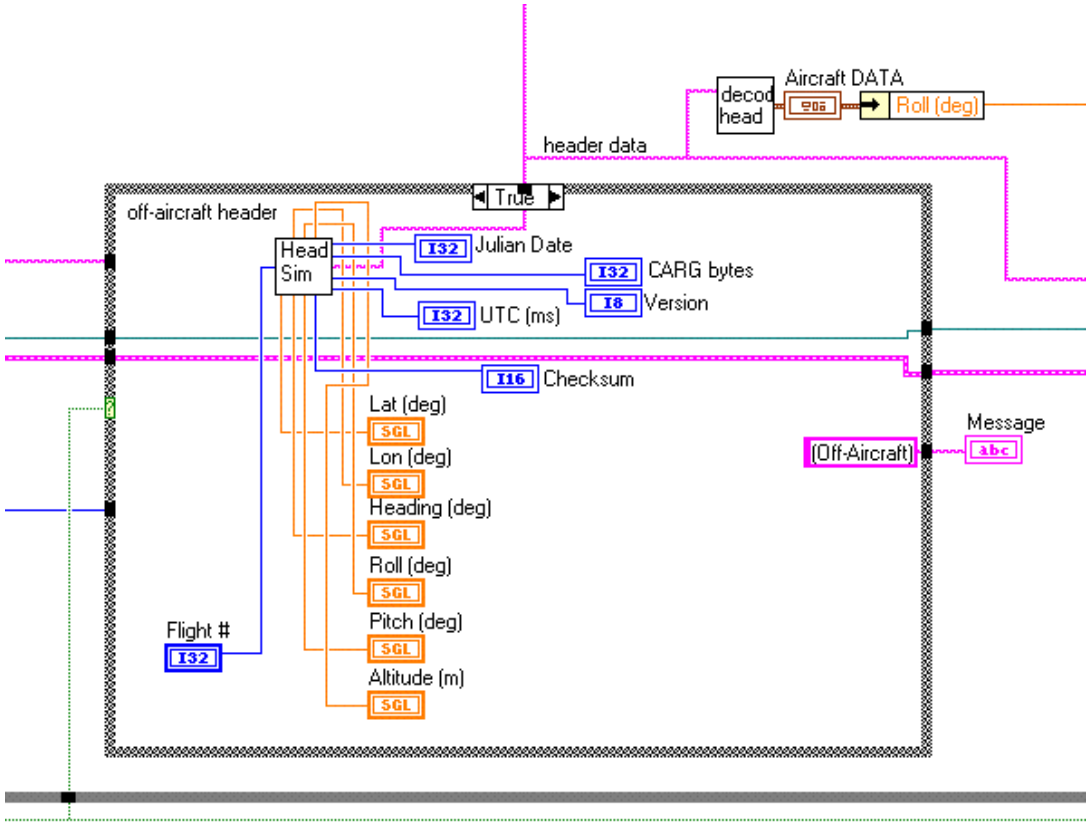

Fig. C14.—Aircraft (Header) Information Read and Decode (Simulator)

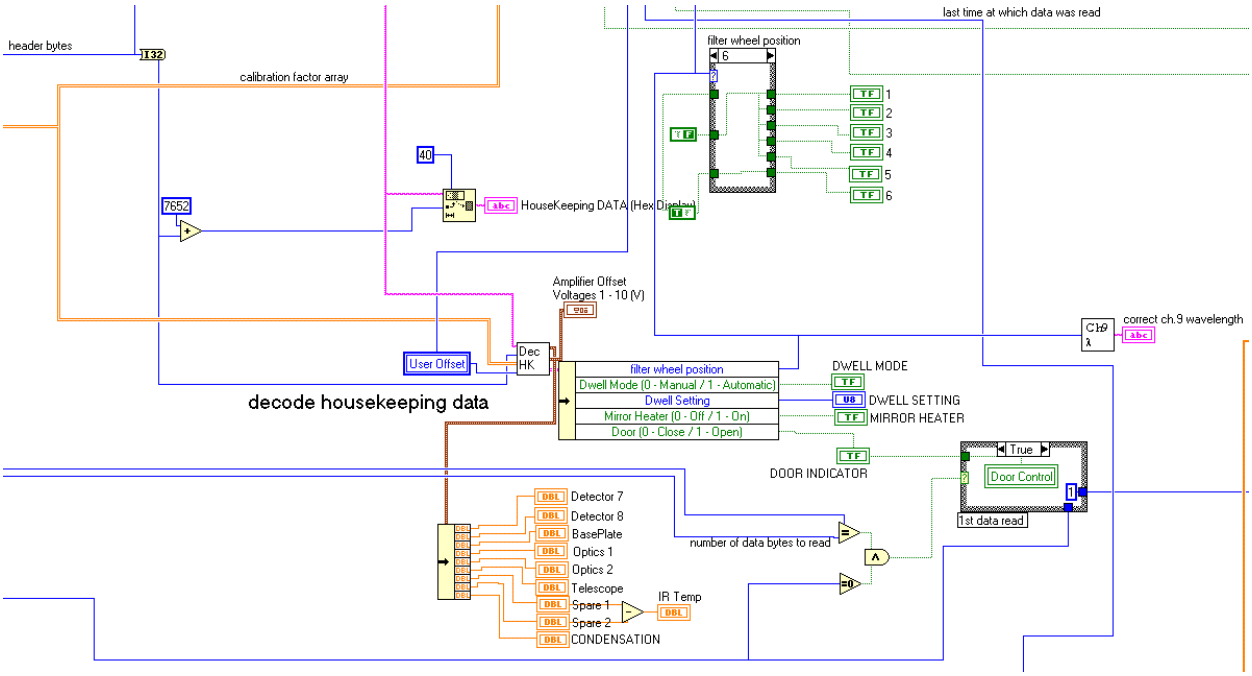

Fig. C15.—The Data Stream contains 'Housekeeping' Information That Details the Status of Controls (such as Filter Wheel Position). This portion of code shows the Decode for the Housekeeping Information.

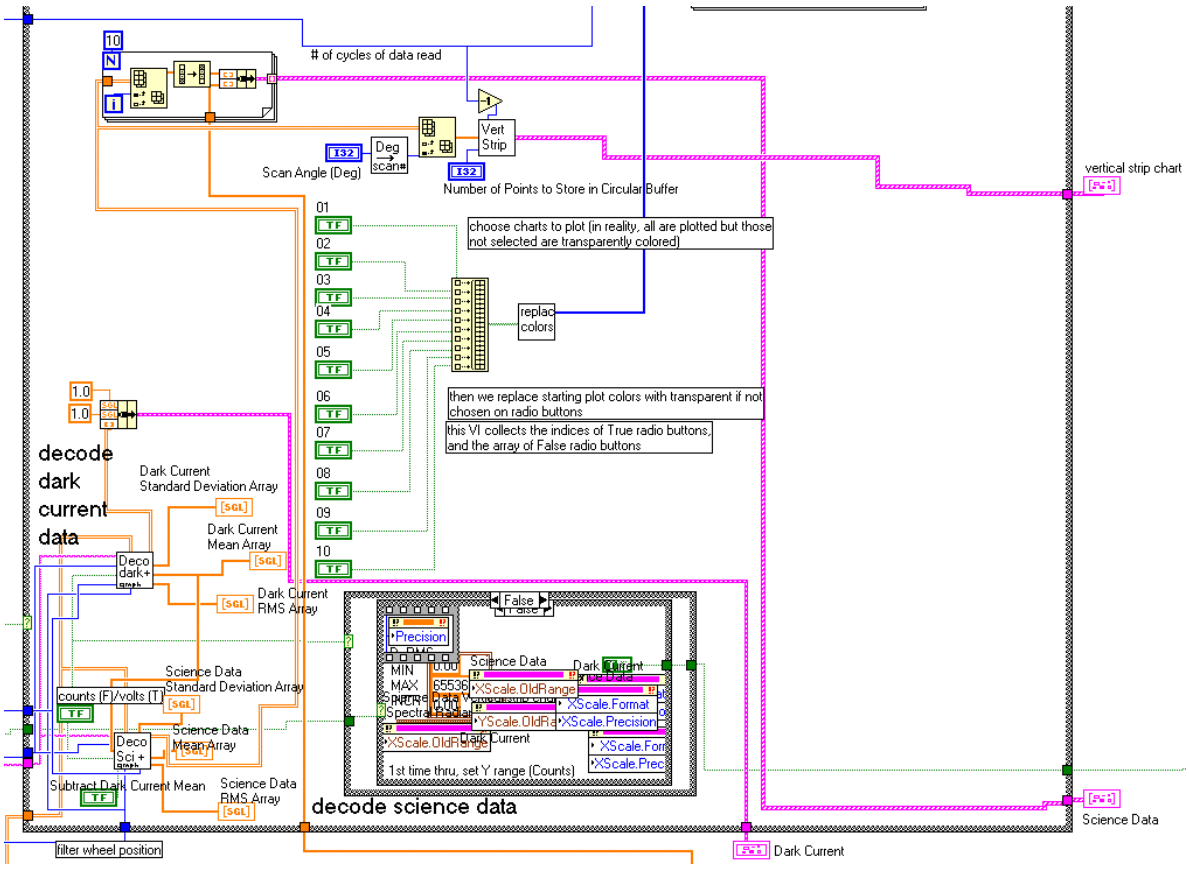

Fig. C16.—Bottom Portion of Decoding and Displaying the Science and Dark Current Data

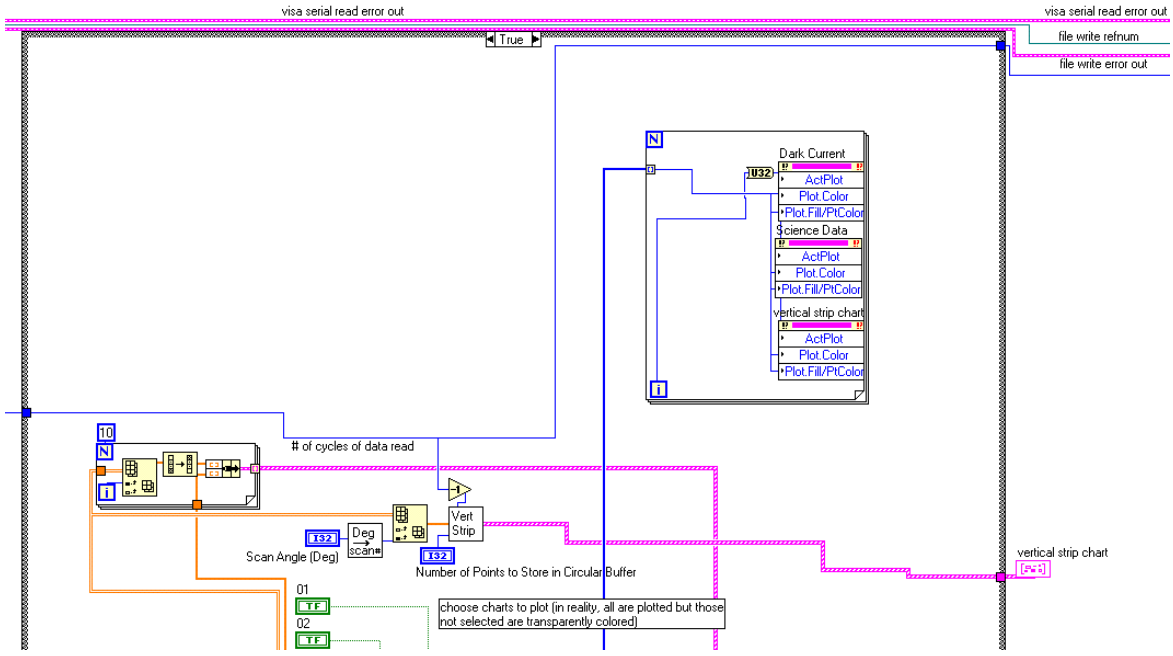

Fig. C17.—Top Portion of Decoding and Displaying the Science and Dark Current Data

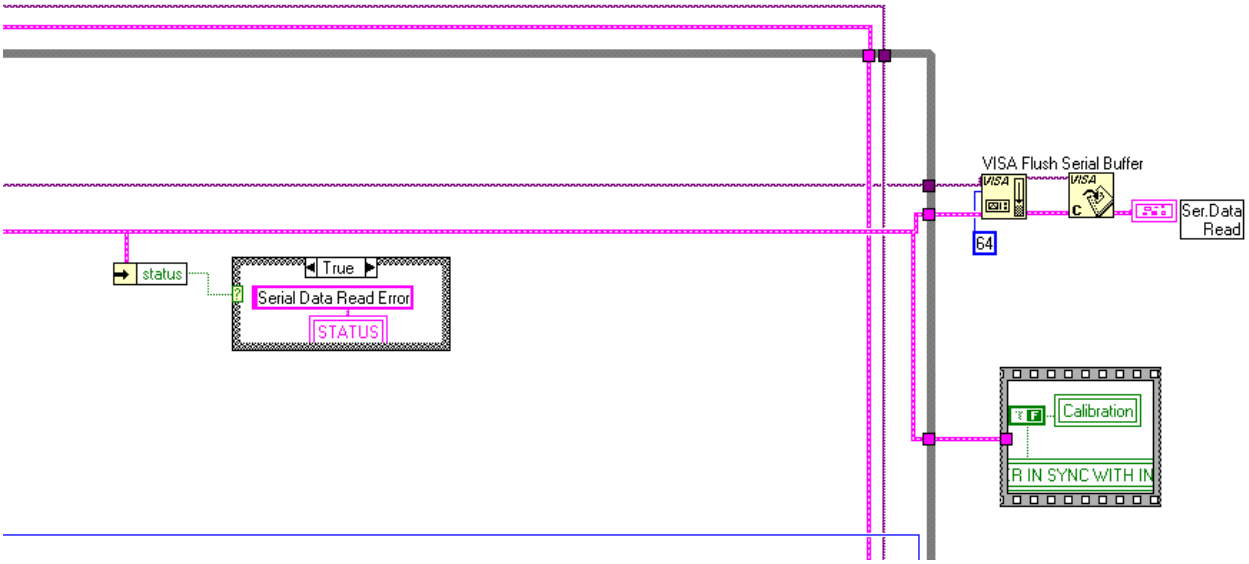

Fig. C18.—Status Display Write For Serial Data Read Error/No Error Conditions, and Exiting Loop for Serial Data Reads

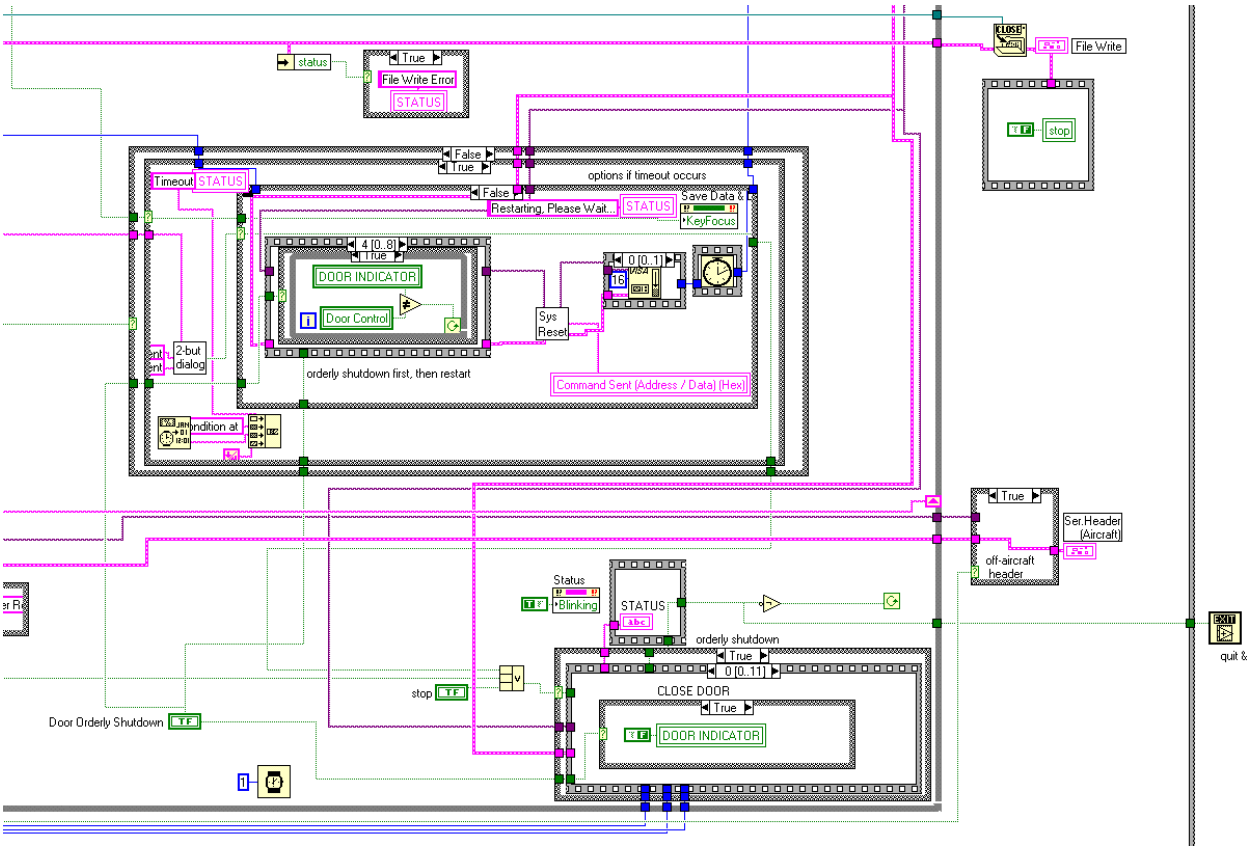

Fig. C19.—Stopping the Serial Data Read Loop (and thus CAR software)

APPENDIX D.—CAR INSTRUMENT SIMULATOR

The CAR Instrument Simulator written in LabVIEW v6i allows one to view the operation of the CAR instrument without having access to the actual equipment. The simulator is distributed as a .exe executable file and requires the file lvrt.dll (v6i) to be placed in the same directory as the executable for those individuals who have not upgraded from LabVIEW v5.1.1 to LabVIEW v6i. From the Windows Desktop, mouse double-click on CAR shortcut icon or alternatively, open the Windows File Manager/Explorer and mouse Double-click on the CAR SIMULATION.EXE file to Start the software from its default file location. The software panel, labeled USER INTERFACE, (identical to that shown in fig. 1 will appear in the monitor window with the 'STATUS' indicator requesting the user to 'Please Power On'. **THE USER CAN INTERACT WITH THIS WINDOW JUST AS IF IT IS THE ACTUAL CAR INSTRUMENT USER INTERFACE.** After powering on by pressing keyboard key 'P' or left mouse-clicking on the POWER button, two new subwindows will appear in the center of the USER INTERFACE window, one on top of the other. These windows will always stay on top of the USER INTERFACE window; so one will need to move the mouse to the title bars of these windows and right mouse-click while dragging on them to move them out of the way in order to observe and interact with the USER INTERFACE window. One window labeled BOARD simulates the CAR instrument acquiring data. In the BOARD window, the user can select different data types for simulation as well as change temperatures (Temperature Simulation) and amplifier voltage offsets (Amplifier Voltage Offset Simulation) and see the response on the USER INTERFACE. Other indicators appear in this window that describe the number of bytes written, the byte pattern, and the results of User Commands that might have been entered on the USER INTERFACE window. The second subwindow is the Aircraft Data or HEADER window. The user can modify several of the items on this window and observe the changes in the USER INTERFACE window. As for the actual instrument, hit keyboard key 'S' to begin to display and save data. (Note: an actual data file labeled 'test.bin' will be written to the default hard drive root directory. This file will get very large very quickly and should be deleted after finishing or after analyzing. Subsequent runs of the simulator will overwrite the 'test.bin' file.) In both subwindows, controls that you can change are given blue outlines and have up/down arrows to the left of them. Indicators have a yellow outline. Simulated fixed voltage data for channels 3, 6, and 9 at the scan angle (non-roll-corrected) of 50 degrees is shown in the user interface window USER INTERFACE (2) below. **To exit the simulation mode, just as for the real CAR software operation, hit keyboard key 'X' and all windows will close.**

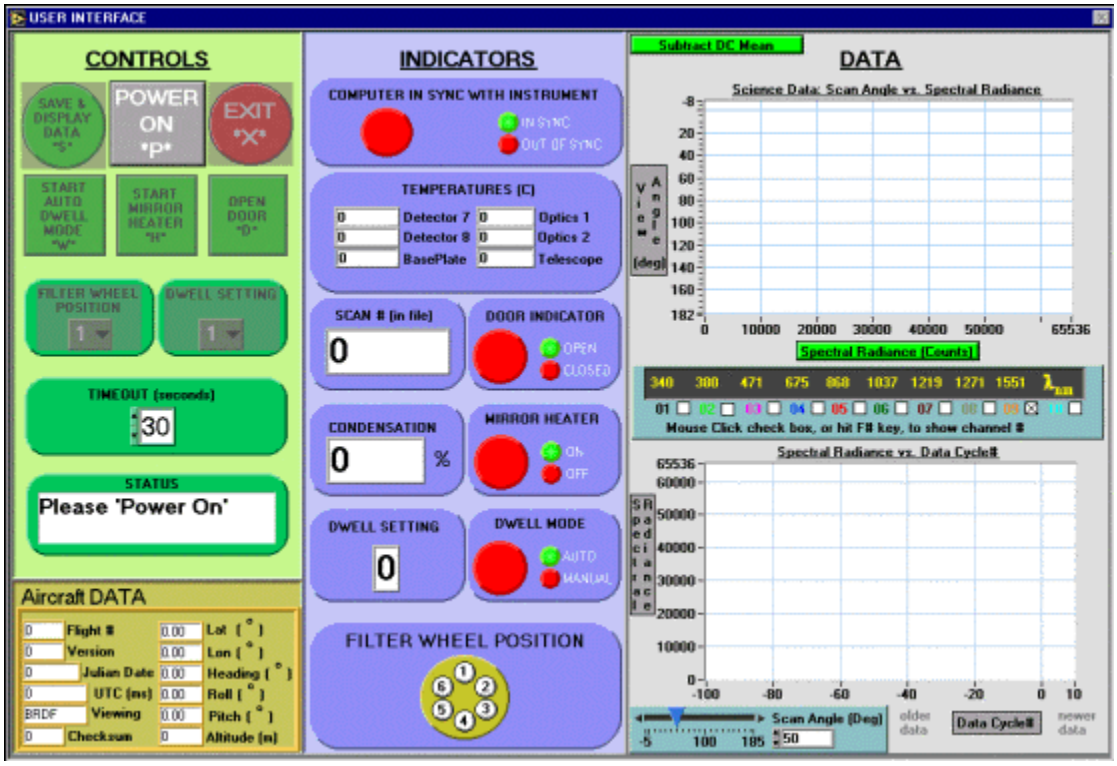

Fig. D1.—USER INTERFACE

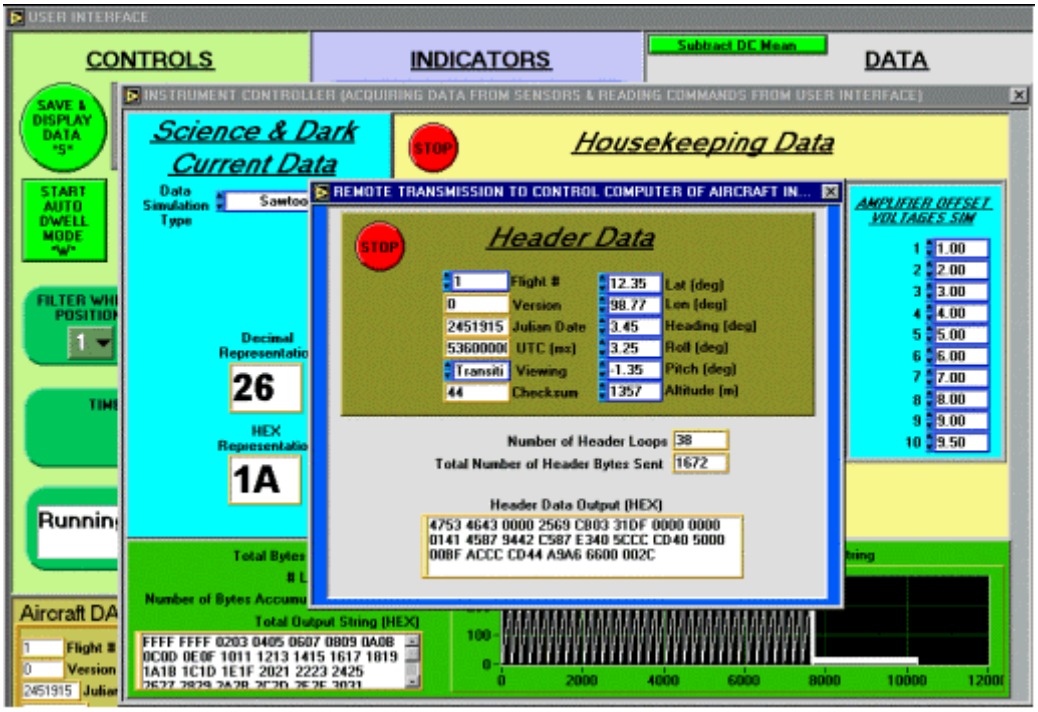

Fig. D2.—USER INTERFACE WITH SUBWINDOWS 'BOARD' AND 'HEADER'

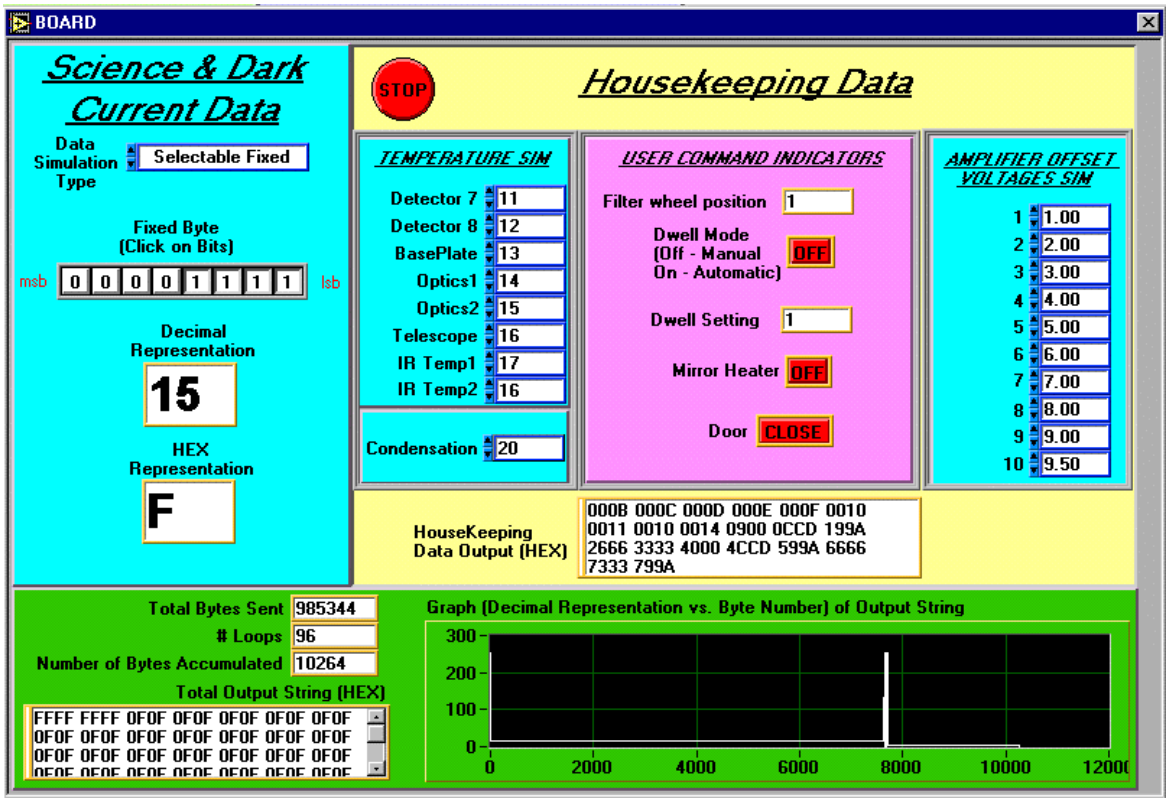

Fig. D3.—BOARD

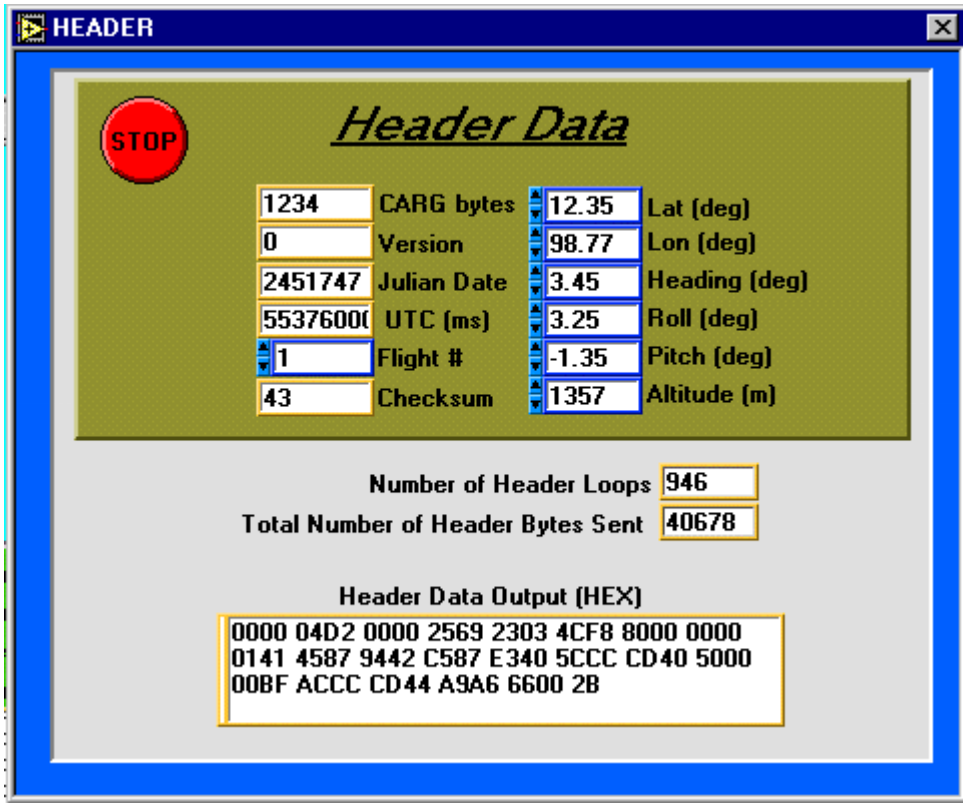

Fig. D4.—HEADER (Aircraft Data)

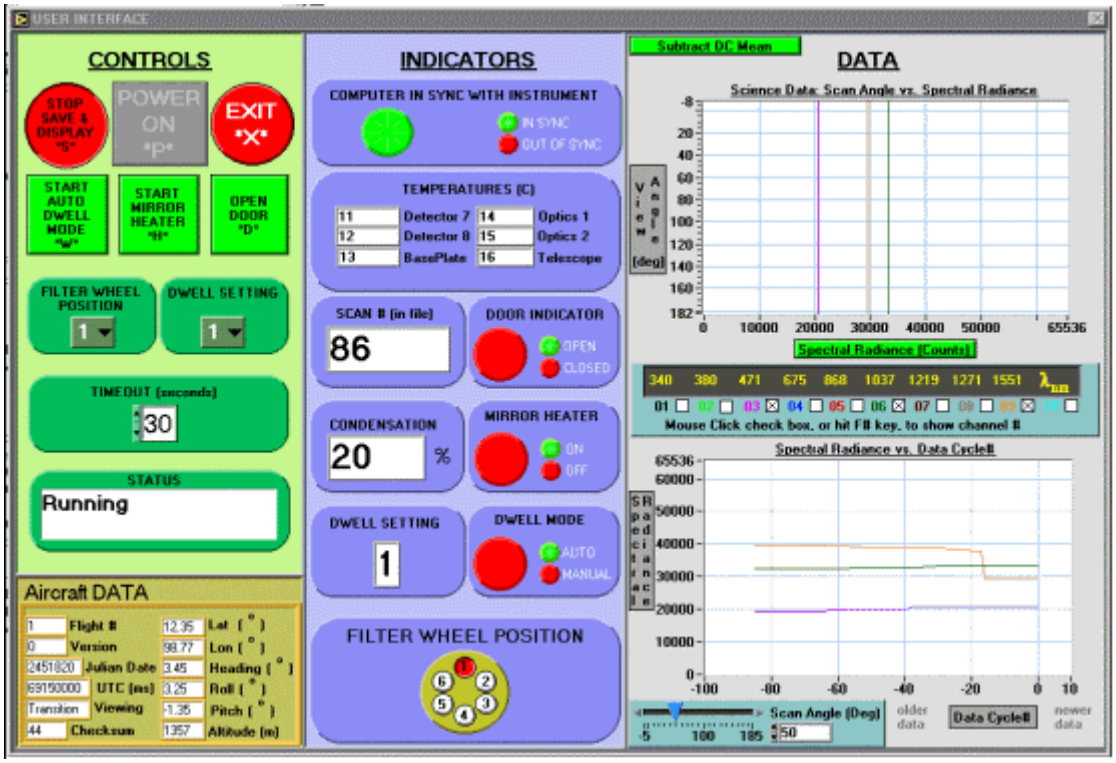

Fig. D5.—USER INTERFACE (2)

APPENDIX E.—POST-TEST CAR DATA VIEWER

A Post-test CAR Data Viewer written in LabVIEW v6i is available that can be used to view all segments of individual data cycles and to locate positions where 'start' and 'stop' byte sequences were incorrectly formulated by the instrument controller. It allows viewing data by cycling through it or selecting specific cycles. The interface is close to identical to the CAR instrument, except that only data from each cycle is displayed (no cycle-to-cycle strip charting is shown, and unnecessary controls are eliminated from the panel). The viewer senses bad start/stop bytes and alerts the user to them, as well as logs them to a .txt file. The Viewer works on both actual and simulated data.

Viewing modes are either 'manual selection' or 'cycle thru all data'. It points out errors in the message indicator on the lower left side of the panel and records all errors in a text file with 'filename'_error.txt name. The errors that it looks for include mismatches in the patterns of start and stop bytes for science, housekeeping, and dark current data. This VI works assuming 10264 data bytes in each cycle are transmitted. This assumption may be faulty if, when bad start and/or stop bytes occur, they become part of the data stream itself. The number of header bytes can be adjusted but is defaulted at 44 based on safari missions of Aug. 2001. Filename must have '.bin' extension. The Post-Test CAR Data Viewer can be distributed as an executable for individuals who have not upgraded from LabVIEW v5.1.1 to LabVIEW v6i. For demonstration purposes, the following files are normally distributed with the Post-Test CAR Data Viewer (all of the following files should be placed in the same directory):

1. a simulated data set test_bad.bin which has the following 'bad byte' conditions:
   - cycle #25: bad science data stop bytes
   - cycle #50: bad science data start bytes
   - cycle #100: bad dark current start bytes
2. calibration1.ini (sample file containing calibration data)
3. View & Analyze CAR data.ini (file necessary to run the .exe executable)
4. lvrt.dll and lvanlys.dll (two v6i .dll files required to run the .exe executable)

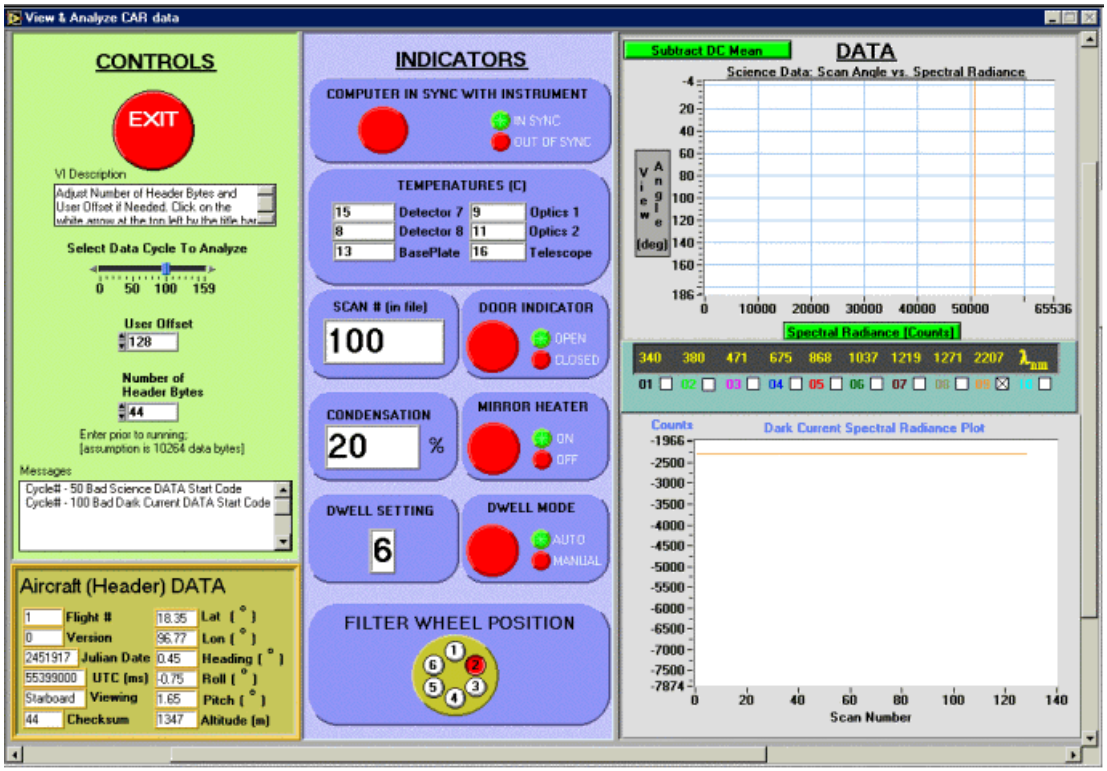

Fig. E1.—Post-test CAR data Viewer with simulated data containing some bad start and stop bytes at different cycles

APPENDIX F.—FURTHER INFORMATION

(1) Instrument Principal Investigators:

Dr. Michael D. King
Code 900
NASA Goddard Space Flight Center
Greenbelt, Maryland
Email Dr. King
Phone: 301–614–5636
Fax: 301–614–5620

Dr. Si-chee Tsay
Code 913
NASA Goddard Space Flight Center
Greenbelt, Maryland
Email Dr. Tsay
Phone: 301–614–6188
Fax: 301–614–6307

(2) Theoretical Basis:

King, M.D., M.G. Strange, P. Leone and L.R. Blaine, 1986: Multiwavelength scanning radiometer for airborne measurements of scattered radiation within clouds. J. Atmos. Oceanic Technology, 3, 513–522.

(3) CAR Data User's Guide:

Li, J.Y., H.G. Meyer, G.T. Arnold, S.C. Tsay and M.D. King: 1997: The Cloud Absorption Radiometer HDF Data User's Guide. NASA Technical Memorandum 104643.

(4) CAR WorldWideWeb Site (http://car.gsfc.nasa.gov

REPORT DOCUMENTATION PAGE

Form Approved
OMB No. 0704-0188

Public reporting burden for this collection of information is estimated to average 1 hour per response, including the time for reviewing instructions, searching existing data sources, gathering and maintaining the data needed, and completing and reviewing the collection of information. Send comments regarding this burden estimate or any other aspect of this collection of information, including suggestions for reducing this burden, to Washington Headquarters Services, Directorate for Information Operations and Reports, 1215 Jefferson Davis Highway, Suite 1204, Arlington, VA 22202-4302, and to the Office of Management and Budget, Paperwork Reduction Project (0704-0188), Washington, DC 20503.

1. AGENCY USE ONLY (*Leave blank*)	2. REPORT DATE	3. REPORT TYPE AND DATES COVERED
	May 2001	Technical Memorandum

4. TITLE AND SUBTITLE

The New Cloud Absorption Radiometer (CAR) Software:
One Model for NASA Remote Sensing Virtual Instruments

5. FUNDING NUMBERS

WU–708–31–13–00

6. AUTHOR(S)

Don J. Roth, David A. Rapchun, and Hollis H. Jones

7. PERFORMING ORGANIZATION NAME(S) AND ADDRESS(ES)

National Aeronautics and Space Administration
John H. Glenn Research Center at Lewis Field
Cleveland, Ohio 44135–3191

8. PERFORMING ORGANIZATION REPORT NUMBER

E–12776

9. SPONSORING/MONITORING AGENCY NAME(S) AND ADDRESS(ES)

National Aeronautics and Space Administration
Washington, DC 20546–0001

10. SPONSORING/MONITORING AGENCY REPORT NUMBER

NASA TM—2001-210898

11. SUPPLEMENTARY NOTES

Don J. Roth, NASA Glenn Research Center; David A. Rapchun, Global Science and Technology, Inc., Greenbelt, Maryland 20770; and Hollis H. Jones, NASA Goddard Space Flight Center. Reponsible person, Don J. Roth, organization code 5920, 216–433–6017.

12a. DISTRIBUTION/AVAILABILITY STATEMENT

Unclassified - Unlimited
Subject Categories: 43 and 61 Distribution: Nonstandard

Available electronically at http://gltrs.grc.nasa.gov/GLTRS

This publication is available from the NASA Center for AeroSpace Information, 301–621–0390.

12b. DISTRIBUTION CODE

13. ABSTRACT ***(Maximum 200 words)***

The Cloud Absorption Radiometer (CAR) instrument has been the most frequently used airborne instrument built in-house at NASA Goddard Space Flight Center, having flown scientific research missions on-board various aircraft to many locations in the United States, Azores, Brazil, and Kuwait since 1983. The CAR instrument is capable of measuring scattered light by clouds in fourteen spectral bands in UV, visible and near-infrared region. This document describes the control, data acquisition, display, and file storage software for the new version of CAR. This software completely replaces the prior CAR Data System and Control Panel with a compact and robust virtual instrument computer interface. Additionally, the instrument is now usable for the first time for taking data in an off-aircraft mode. The new instrument is controlled via a LabVIEW v5.1.1-developed software interface that utilizes, (1) serial port writes to write commands to the controller module of the instrument, and (2) serial port reads to acquire data from the controller module of the instrument. Step-by-step operational procedures are provided in this document. A suite of other software programs has been developed to complement the actual CAR virtual instrument. These programs include: (1) a simulator mode that allows pretesting of new features that might be added in the future, as well as demonstrations to CAR customers, and development at times when the instrument/hardware is off-location, and (2) a post-experiment data viewer that can be used to view all segments of individual data cycles and to locate positions where ‘start’ and ‘stop’ byte sequences were incorrectly formulated by the instrument controller. The CAR software described here is expected to be the basis for CAR operation for many missions and many years to come.

14. SUBJECT TERMS	15. NUMBER OF PAGES
Software; Atmospheric studies; Radiometry; Clouds; Remote sensing	45
	16. PRICE CODE

17. SECURITY CLASSIFICATION OF REPORT	18. SECURITY CLASSIFICATION OF THIS PAGE	19. SECURITY CLASSIFICATION OF ABSTRACT	20. LIMITATION OF ABSTRACT
Unclassified	Unclassified	Unclassified	